STATE OF WASHINGTON
DEPARTMENT OF ECOLOGY
3100 Port of Benton Blvd • Richland, WA 99354 • (509) 372-7950
711 for Washington Relay Service • Persons with a speech disability can call 877-833-6341

August 23, 2018 18-NWP-126

Mr. Brian T. Vance, Manager
Office of River Protection
United States Department of Energy
P.O. Box 450, MSIN: H6-60
Richland, Washington 99352

Mr. Brian Reilly, Project Director
Bechtel National, Inc.
2435 Stevens Center Place, MSIN: H4-02
Richland, Washington 99354

Re: Final Agency-Initiated Permit Modification 8C.2018.4F to the Hanford Facility Resource Conservation and Recovery Act Permit, Revision 8C, for the Treatment, Storage and Disposal of Dangerous Waste, Part III, Operating Unit Group 10, Waste Treatment and Immobilization Plant (WTP Permit), WA7890008967

Reference: See page 3

Dear Mr. Vance and Mr. Reilly:

This letter issues the Department of Ecology's (Ecology) final permit decision to approve and incorporate the proposed permit modification 8C.2018.7D, (from here on known as permit modification 8C.2018.4F). This modification is incorporated into Part III, Unit 10, of the WTP Permit. In accordance with Washington Administrative Code (WAC) 173-303-840(8)(b), the modified portions of the WTP Permit in 8C.2018.4F will become effective September 23, 2018.

The purpose of this Agency-Initiated modification is to incorporate documents into the WTP Permit Appendices to support the design, construction, and installation of the EMF process vessels, and tank ventilation system. The modification provided in letter 18-ECD-0027 (Reference) includes design and permitting documents for the following systems:

- Overhead Sampling Vessels (DEP-VSL-00004A/B)
- Process Condensate Lag Storage Vessels (DEP-VSL-00005A/B)
- High Efficiency Particulate Filter (HEPA) Preheaters (DVP-HTR-00001A/B)
- HEPA Filter Housings (DVP-HEPA-00003A/B and DVP-HEPA-00004A/B)
- Exhausters (DVP-EXHR-00001A/B)
- Critical Piping for Ancillary equipment

As required by WAC 173-303-840(3)(d), Ecology held a 45-day public comment period from June 4 through July 18, 2018. Ecology received two sets of comments during the public comment.

Ecology is issuing a *Response to Comments* document to meet the requirement of WAC 173-303-840(9). This document provides comment responses and describes the public involvement process taken in support of the public comment period. The *Response to Comments* document is on the enclosed DVD (Ecology Publication 18-05-016) and on Ecology's website at: https://fortress.wa.gov/ecy/publications/SummaryPages/1805016.html.

The enclosed DVD contains the legal copy of the approved modified portions of the WTP Permit. Copies of this DVD are available at the Hanford Public Information Repositories in Richland, Spokane, and Seattle, Washington, as well as Portland, Oregon.

A DVD and hard copy are on file at the locations listed below:

Department of Ecology
Nuclear Waste Program
3100 Port of Benton Boulevard
Richland, Washington 99354

United States Department of Energy
Hanford Administrative Record
2440 Stevens Center Place
Richland, Washington 99354

Individuals can request copies of the DVD by contacting Ecology's Resource Center at (509) 372-7950.

A copy of the WTP Permit is on Ecology's website at: http://www.ecy.wa.gov/programs/nwp/permitting/hdwp/rev/8c/. The website will be updated with the approved modified portions in 8C.2018.4F after the effective date.

Your Right to Appeal

You have the right to appeal this permit modification to the Pollution Control Hearings Board (PCHB) within 30 days of the date of receipt of this Permit. Chapter 43.21B of the Revised Code of Washington (RCW) and Chapter 371-08 of the WAC govern the appeal process. "Date of receipt" is defined in RCW 43.21B.001(2).

To appeal you must do all of the following within 30 days of the date of receipt of this Permit:

- File your appeal and a copy of this Permit with the PCHB (see address below). Filing means actual receipt by the PCHB during regular business hours.
- Serve a copy of your appeal and this Permit on Ecology in paper form – by mail or in person (see address below). E-mail is not acceptable.

You must also comply with other applicable requirements in Chapter 43.21B of the RCW and Chapter 371-08 of the WAC.

1. To file your appeal with the Pollution Control Hearing Board:

Mail appeal to:

The Pollution Control Hearings Board
PO Box 40903
Olympia, Washington 98504-0903

OR

Deliver your appeal in person to:

The Pollution Control Hearings Board
1111 Israel Road, Southwest, Suite 301
Tumwater, Washington 98501

2. To serve your appeal on the Department of Ecology:

Mail appeal to:

The Department of Ecology
Appeals Processor
PO Box 47608
Olympia, Washington 98504-7608

OR

Deliver your appeal in person to:

The Department of Ecology
Appeals Processor
300 Desmond Drive Southeast
Lacey, Washington 98503

3. Send a copy of your appeal to:

Dan McDonald, Tank Waste Treatment Project Manager
Department of Ecology
Nuclear Waste Program
3100 Port of Benton Boulevard
Richland, Washington 99354

If there are any questions regarding this letter, please contact John Richardson, Permit Writer, at john.richardson@ecy.wa.gov or (509) 372-7943 or Mandy Jones, Permit Coordinator, at mandy.jones@ecy.wa.gov or (509) 372-7916.

Sincerely,

Suzanne Dahl
Dangerous Waste Permit Manager
Nuclear Waste Program

jr/sh
Enclosure

Reference: Letter 18-ECD-0027, dated April 11, 2018, "Submittal of Dangerous Waste Permit Design Package No. BOF-010 to Support the Effluent Management Facility Group III Equipment Design Package"

cc electronic:

Dave Bartus, UPA
David Einan, EPA
Mary Beth Burandt, USDOE
Duane Carter, USDOE
Cliff Clark, USDOE
Joe Franco, USDOE
Rob Hastings, USDOE
Lori Huffman, USDOE
Mostafa Kamal, USODE
Christopher Kemp, USDOE
Tony McKarns, USDOE
Donna Yasek, BNI
Laura Cusack, CHPRC
Moussa Jaraysi, CHPRC
Dru Butler, MSA
Jon Perry, MSA
Ann Shattuck, MSA
Michael Stephenson, PNNL
Lucinda Borneman, WRPS
Debra Alexander, Ecology
Jennifer Cantu, Ecology
Annette Carlson, Ecology
Mandy Jones, Ecology
Ron Skinnarland, Ecology

cc w/enc, DVD:

Tim Hamlin, EPA
Cliff Clark, USDOE
Donna Yasek, BNI
Matt Johnson, CTUIR
Jack Bell, NPT
Alyssa Buck, Wanapum
Rose Longoria, YN
ERWM Staff, YN
Susan Leckband, HAB
Ken Niles, ODOE
John Fowler, ACHP
Robin Priddy, BCAA
Donald Redman, USACE
Trevor Fox, USFW
Mike Livingston, WDFW
John Martell, WDOH
John Wiesman, WDOH
Sonia Soelter, WSDA
Allyson Brooks, WSDAHP
Cindy Preston, WSDNR
BNI Correspondence Control
CHPRC Correspondence Control
Environmental Portal
Gonzaga University Foley Center Library
Hanford Facility Operating Record
MSA Correspondence Control
PNNL Correspondence Control
Portland State University Library, Government Information
University of Washington Suzzallo Library, Government Publications
USDOE-ORP Correspondence Control
USDOE Public Reading Room, CIC
USDOE-RL Correspondence Control
USEPA Region 10 Hanford Field Office Correspondence Control
WRPS Correspondence Control

cc w/enc, DVD and hard copy:

Hanford Administrative Record: Hanford Site-wide Permit
NWP Central Files

cc w/enc, hard copy:

NWP Library: Hanford Site-wide Permit

DANGEROUS WASTE PORTION OF THE RESOURCE CONSERVATION AND RECOVERY ACT PERMIT FOR THE TREATMENT, STORAGE, AND DISPOSAL OF DANGEROUS WASTE

SIGNATURE PAGE FOR 8C.2018.4F

The enclosed portions of the Hanford Facility Resource Conservation and Recovery Act Permit, Dangerous Waste Portion, Revision 8c for the Treatment, Storage, and Disposal of Dangerous Waste were modified on August 23, 2018 and effective on September 23, 2018. These portions are the legal and current version of the permit. It will remain in effect unless modified, revoked and reissued under Washington Administrative Code (WAC) 173-303-830(3), terminated under WAC 173-303-830(5), or continued in accordance with WAC 173-303-806(7). All other portions of the permit remain unchanged.

ISSUED BY:
WASHINGTON STATE DEPARTMENT OF ECOLOGY

_____ Date: 8/23/2018

Suzanne Dahl, Dangerous Waste Permit Manager
Nuclear Waste Program, Department of Ecology

This page intentionally left blank.

DEPARTMENT OF
ECOLOGY
State of Washington

Response to Comments

Modification of the Hanford Facility Resource Conservation and Recovery Act Permit for the Treatment, Storage, and Disposal of Dangerous Waste, Part III, Operating Unit Group 10 (WA7890008967) Waste Treatment Plant Permit Modification for Effluent Management Facility Equipment 8C.2018.7D

June 4 through July 18, 2018

Summary of a public comment period and responses to comments

August 2018

Publication no. 18-05-016

Publication and contact information

This publication is available on the Department of Ecology's (Ecology) website at https://fortress.wa.gov/ecy/publications/SummaryPages/1805016.html

For more information contact:

Dan McDonald, Tank Waste Treatment Project Manager
Nuclear Waste Program
3100 Port of Benton Boulevard
Richland, WA 99354
Phone: 509-372-7950

Email: Hanford@ecy.wa.gov

Washington State Department of Ecology – www.ecology.wa.gov

- Headquarters, Lacey 360-407-6000
- Northwest Regional Office, Bellevue 425-649-7000
- Southwest Regional Office, Lacey 360-407-6300
- Central Regional Office, Yakima 509-575-2490
- Eastern Regional Office, Spokane 509-329-3400

Ecology publishes this document to meet the requirements of Washington Administrative Code 173-303-840 (9).

To request ADA accommodation including materials in a format for the visually impaired, call Ecology at 509-372-7950 or visit https://ecology.wa.gov/accessibility. People with impaired hearing may call Washington Relay Service at 711. People with speech disability may call TTY at 877-833-6341.

Response to Comments

Modification of the Hanford Facility Resource Conservation and Recovery Act Permit for the Treatment, Storage, and Disposal of Dangerous Waste, Part III Operating Unit Group 10 (WA7890008967) Waste Treatment and Immobilization Plant Effluent Management Facility Equipment

8C.2018.7D

June 4 through July 18, 2018

Nuclear Waste Program
Washington State Department of Ecology
Richland, Washington

This page is purposely left blank.

Table of contents

Introduction 1
Reasons for issuing the permit 1
Public involvement actions 2
List of commenters 4
Attachment 1: Comments and responses
Appendix A: Copies of all public notices

Introduction

The Washington State Department of Ecology (Ecology) manages dangerous waste within the state by writing permits to regulate its treatment, storage, and disposal.

When a new permit or a significant modification to an existing permit is proposed, Ecology holds a public comment period to allow the public to review the change and provide formal feedback. (See Washington Administrative Code [WAC] 173-303-830 for types of permit changes.)

The Response to Comments is the last step before issuing the final permit, and its purpose is to:

- Specify which provisions, if any, of a permit will become effective upon issuance of the final permit, providing reasons for those changes.
- Describe and document public involvement actions.
- List and respond to all significant comments received during the public comment period and any related public hearings.

This Response to Comments is prepared for:

Comment period:	Agency Initiated Modification for the Waste Treatment Plant Effluent Management Facility Equipment, 8C.2018.7D June 4 through July 18, 2018
Permit:	*Hanford Facility Resource Conservation and Recovery Act (RCRA) Permit for the Treatment, Storage, and Disposal of Dangerous Waste, Part III, Operating Unit Group 10 (WA7890008967), Waste Treatment and Immobilization Plant*
Permittee(s):	*U.S. Department of Energy, Office of River Protection (USDOE-ORP) and Bechtel National Inc. (BNI)*
Original issuance date:	*September 27, 1994*
Draft effective date:	September 22, 2018

To see more information related to the Hanford Site and nuclear waste in Washington, please visit our website: https://www.ecology.wa.gov/Hanford.

Reasons for issuing the permit

Ecology prepared a draft permit modification that incorporates new design information for the Hanford Facility RCRA Permit, Revision 8C, for the Treatment and Disposal of Dangerous Waste, Part III, Operating Unit Group 10, Waste Treatment and Immobilization Plant (WTP).

The proposed modification supports the design and construction of the Effluent Management Facility (EMF) at WTP. The EMF is being built to support the Direct Feed Low Activity Waste (DFLAW) configuration. Specifically, the EMF will manage effluents transferred from the Low-Activity Waste (LAW) Facility and the Analytical Laboratory.

The DFLAW configuration permits Low Activity Waste Facility operations prior to the completion of the High-Level Waste (HLW) and Pretreatment (PT) Facilities. In the DFLAW configuration, pre-treated waste is delivered directly to the LAW Facility. When the PT and HLW vitrification facilities become operational, operations will shift from DFLAW to the baseline configuration. In baseline configuration, it is anticipated that the EMF will be placed in standby until the treatment of the waste has been completed.

DFLAW operations are designed for a 40 year service life and will operate for ten years. This allows time to resolve technical issues with the HLW and PT processes and finish the construction of those facilities.

The proposed modification included supporting engineering, design, and technical permitting details to support the following equipment to be installed at EMF:

- Overhead Sampling Vessel (DEP-VSL-00004A/B)
- Process Condensate Lag Storage Vessels (DEP-VSL-00005A/B)
- DVP HEPA Housings (DVP-HEPA-00003A/B and DVP-HEPA-00004A/B)
- Ventilation Exhauster (DVP-EXHR-00001A/B)
- Ventilation Preheaters (DVP-HTR-00001A/B)
- Critical Piping for Ancillary Piping

There are four permitted tank systems in the EMF located at the (-) 39' and 0' elevations. The evaporator/separator, reboiler, and the condensers are located at the 0' elevation.

This proposed permit modification consisted of information to be incorporated in the WTP Appendices:

- Independent, Qualified, Registered, Professional Engineer (IQRPE) Report
- General Arrangement Drawings
- Process Flow Diagrams
- Piping and Instrument Diagrams
- Material Selection Documentation
- Mechanical Drawings
- Mechanical Data Sheets
- Engineering Specifications

Public involvement actions

Ecology encouraged public comment on the WTP Effluent Management Facility during a 45-day public comment period held June 4 through July 18, 2018.

The following actions were taken to notify the public:

- Mailed a public notice announcing the comment period to1333 members of the public.
- Placed a public announcement legal classified notice in the *Tri-City Herald* on June 3, 2018.
- Emailed a notice announcing the start of the comment period to the Hanford-Info email list, which has 1428 recipients.

The Hanford information repositories located in Richland, Spokane, and Seattle, Washington, and Portland, Oregon, received the following documents for public review:

- Focus Sheet
- Transmittal letter
- Statement of Basis for the proposed 8C.2018.7D Permit Modification
- Draft 8C.2018.7D Permit Modification

The following public notices for this comment period are in Appendix A of this document:

- Focus Sheet
- Classified advertisement in the *Tri-City Herald*
- Notice sent to the Hanford-Info email list

List of commenters

The table below lists the names of organizations or individuals who submitted a comment on the WTP Effluent Management Facility Permit modification. The comments and responses are in Attachment 1.

Commenter	Organization
Mike Conlan	Citizen
Anonymous	Citizen

Attachment 1: Comments and responses

Description of comments:

Ecology accepted comments from June 4 through July 18, 2018. This section provides summary of comments that we received during the public comment period and our responses, as required by RCW 34.05.325(6)(a)(iii). Comments are grouped by individual, and each comment is addressed separately.

Comment From: Mike Conlan

I-1-1
1. Remove all nuclear waste,
2. Do not allow anymore nuclear waste into the facility,
3. Replace all the single storage tanks,
4. Stop all the nuclear leakage entering the Columbia River

Response To: Mike Conlan

I-1-1
Long-term storage, treatment and disposal of the waste, and protection of human health and the environment are priorities for the Department of Ecology. The proposed changes to the permit are intended to better manage the waste at Hanford, not to allow new waste. The operation of the Effluent Management Facility at the Waste Treatment Plant is a positive step to eventually treating waste currently stored at Hanford. Ecology agrees that the tank waste pose a threat; however, Single-shell tanks are not in the scope of this comment period. We believe a better approach to addressing single-shell tanks is to put the waste in compliant double-shell tanks in preparation for eventual treatment in the Waste Treatment Plant now under construction. Stopping any potential nuclear waste from impacting the Columbia River is not within the scope of the WTP Permit. Prevention of groundwater and surface water impacts are addressed in operations associated with other units.

Comment From: Anonymous Citizen

I-2-1
Use of Re-Purposed Pretreatment Vessels Should be Questioned Letter 18-ECD-0027 includes document IA-3021154-000, where an independent qualified registered professional engineer (IQRPE) reviewed a portion of the design limited to the current subset of EMF vessels. Of note is that page 4 of 10 of IA-3021154-000 states:

"Note: It should be noted that (sic) PFT [PTF] vessels (UFP-VSL-00002 A/B) and (HLP-VSL-00027 A/B) were originally designed as QL-1 and SC-1 with internal PJMs and external jackets as applicable. These vessels have been re-purposed and re-qualified as (DEP-VSL-00004 A/B) and (DEP-VSL-00005 A/B) respectively to be QL (CM) and SC-IV Originally they were designed to much stringent requirements as compared to the downgraded re-purposed SC-IV category requirements. The intended PJMs in vessels 4 A/B have not been installed in them. For vessels 5 A/B, the PJMs and their support structures do not serve any purpose for their re-use. The vent holes drilled in the top heads of the PJMs will not have any detrimental effect on the parent vessels. The PJMs in fact will have dampening effect thus reducing the seismic sloshing forces. No corrosion/erosion is expected for these stainless steel vessel during their storage period as required by the BNI specification: therefore all in all, the vessels will serve their reintended purpose during their service life. "

(a)-The above stated removal of permitted tanks from the Pretreatment Facility to the EMF/DFLAW facility renders the PTF Dangerous Waste Permit invalid. Ecology should consider revoking the PTF permit because the PTF permit is now materially incorrect.

(b) - The vessels installed at EMF will have pulse jet mixers in them that are not needed. What happens if one of these vessels needs to be replaced? Will the pulse jets become a collection point for contamination and radioactive material that can't be removed? What provisions exist for cleaning out and removing these tanks and their contents in a manner consistent with ALARA principles? Is there a shielded removal/replacement capability? Has there been a safety review or hazards analysis of the tank internals? ORP approved the LAW DSA with omissions for the EMF. The omissions should be corrected before Ecology allows construction.

(c)-The IQRPE assumes that corrosion by the new and more corrosive fluids to be added to the designed-for-PT vessels will be acceptable due to a BNI specification. It appears that the IQRPE did not compare the actual fluid composition ranges to the specification, but accepted that it won't corrode because it is required to not corrode. This suggests a more thorough review is needed.

I-2-2
The Overall Structural Integrity of the EMF should be Questioned Letter 18-ECD-0027 also contains structural integrity assessments for DFLAW, in IQRPE Reports IA-3021153-000, IA-3021154-000 and IA-3021155-000. Ecology should consider the validity of the conclusions in these reports in light of the overall structural QA problems at WTP. Letter 18-QAD-0024, dated April 13, 2018, identified a long standing open issue with the quality records for WTP Structural Steel, and provided an audit plan. The audit report was expected to be issued by June 8, 2018. Ecology should review the results of this audit, and should insist on having the results of an extent of condition review for the EMF facility before approving a permit or temporary authorization to allow continued construction. The audit exit briefing (18-206) indicates that there are five findings, and there is documentation to show that Bechtel failed to use an approved supplier as required by the QA Manual and did not have heat numbers or material test records for WTP materials.

Ecology should also verify that corrective actions are complete from the finding associated with the EMF Structural Design, described in letter 18-WTP-0036, dated March 30, 2018.

I-2-3
Corrosion Evaluations Contain Incomplete Data
Corrosion Evaluation 24590-BOF-N1D-DEP-00004, Rev 1 for Vessels DEP-VSL00004 A/B has 23 entries marked "TBD" with a note that "Values marked as "TBD" will be provided in the revision to 24590-BOF-M4C-V11T-00004 (Ref 5.1.4(2)) based on APPS model runs for corrosion.

Corrosion Evaluation 24590-BOF-N1D-DEP-00005, Rev 1, for the evaporator feed vessel DEP-VSL-00002 has 20 entries marked "TBD" with a note that "Values marked as "TBD" will be provided in the revision to 24590-BOF-BOF-M4C-V11T-00004 (Ref.5.1.4(2)) based on APPS model runs for corrosion.

Corrosion Evaluation 24590-BOF-N1D-DVP-00001, Rev 1 for the process ventilation exhauster DVP-EXHR-00001 A/B has 8 entries marked "TBD."

Corrosion Evaluation 24590-BOF-N1D-DVP-00002, Rev 1 for the process ventilation preheaters DVP-HTR-00001 A&B has 8 entries marked "TBD."

The corrosion evaluations also point out that multiple non-routine operations were not modeled, analyzed or considered in the analyses.

The IQRPE accepts some materials based on assuming the equipment is dry, but, for the fans and off-gas system, when there is down time or a power failure, the moisture is not removed, it cools, and moisture can condense. There have been past problems with condensation causing corrosion upon shut down of a ventilation system. This aspect should be further reviewed.

As a result, Ecology should consider that the IQRPE report is not based on an objective evidence, but on promises of future action and "trust" that has not been earned. (See comment 1(c).)

I-2-4
Letter Revisions for Drawings and Documents are Not Suitable for Construction The documentation provided to Ecology with letter18-ECD-0027 contains references to letter revisions as follows:

Rev A - 25 times
Rev B - 25 times
Rev C-1 time
Rev E-1 time

Letter revisions are used to denote design work that is not confirmed as acceptable for construction. Ecology should not issue a final permit that allows construction or a temporary authorization to allow construction until the designs are complete. This is a requirement of DOE Order 413.3B, and also of NQA-1, which requires design verification.

I-2-5
Commercial Graded Dedication should be Verified Prior to Construction 24590-BOF-3PS-MEEO-T0002 Rev 1, Engineering Specification for DVP HEPA Filter Preheater, states that the Buyer (Bechtel, National Inc.) "is responsible for Commercial Graded Dedication (CGD) activities associated with this work."

There has been a systemic failure of CGD work at WTP. CGD corrective actions are based on only a statistical sampling to determine the extent of condition (and not 100% review, as was recommended recently by GAO). CGD corrective actions are also incomplete. See letters 18-QAD-0032, CCN-298353, and CCN-304847.

As a result, Ecology should obtain verification that the commercial grade dedication report for the HEP A Filter Preheater is complete and correct, and the proper materials have been selected.

I-2-6
Integration with IDF for EMF Secondary Waste Disposal is Relevant EMF and DFLAW cannot operate without the IDF disposal facility and IDF is not prepared to accept EMF solidified concentrate.

The IDF Performance Assessment (PA), RPP-RPT-55958, talks about the secondary waste from the EMF condensate, which will be processed at the Effluent Treatment Facility (ETF), but the IDF PA is silent about solidified bottoms from the EMF. Prior documents indicated that EMF bottoms would be processed to the IDF (for example, PNNL-26570/RPT-SWCS-012). Is the omission/lack of EMF bottoms composition data in the IDF PA the reason for the recent change to recycling the bottoms back to the melter?

Ecology should require the EMF Bottoms composition/solidified waste to be included in the IDF Performance Assessment, because it may be the least cost disposal path, and the decision to recycle may tum out to be unworkable due to the corrosion impacts on the LAW melters or due to the amount of dilution with sodium hydroxide that might be needed to prevent corrosion from the LAW glass feed.

The lack of an integrated and completed design before construction is resulting in poor quality, accelerated but ill-considered decisions. This is relevant to the EMF Permit as limitations on the IDF is a precursor for future changes, which could have been avoided by cancelling fast track design-build and cancelling phased permitting.

I-2-7
The WTP Safety Basis is Relevant to EMF and is Inadequate 18-NSD-0011 shows that ORP has approved work on the EMF without the requisite safety basis. ORP's approval is conditional (also noted in 18-NSD-0009) based on "planned design and operational safety improvements." Ecology should consider revoking construction approval until the "planned" improvements are completed and verified. Closing items to promises of future actions is contrary to QA requirements, and has proven to be a poor approach based on years of experience at WTP.

I-2-8
Overall LAW Structures are Relevant to EMF and are in Question Bechtel has responded to quality issues in structural steel by implying that heat numbers can establish QA connectivity between items whose records are missing (CCN-303591). Bechtel claims that traceability by heat number for each piece mark, demonstrates that the available documentation provides the appropriate level of quality assurance.

To be believable, structural steel verified by heat lot should include positive material identification and not rely on just the annealing process. The discussion is insufficient and a detailed report on why this approach is or is not sufficient is needed.

I-2-9
ETF Ability to Treat EMF Effluent is Relevant and in Question EMF Operations may not actually result in condensate/scrubber waste that is treatable at the ETF. Ecology should ask for a treatability evaluation before allowing construction to continue. In previous analyses even before EMF, WTP secondary effluents have been in excess of ETF acceptance criteria (HNF-3172). What is the condition now?

Meeting minutes documented in WRPS-1800849 show that an EMF waste profile was reviewed against LERF/ETF waste acceptance criteria (HNF-3172).

The preliminary results were discussed and the key issues were:

- The change from Cs-137 and Sr-90 to Tc-99 and I-129 as the predominant isotopes would require additional radiological monitoring and control.

- The organic constituents and concentrations increased from the previous EMF profile.

- High organics present both regulatory and operational issues for ETF.

- Eleven organics and PCB 's exceed the ETF RCRA de listing approval treatability envelope limits.

- Twelve organics exceed the ETF demonstrated performance influent envelope.

- There are 25 organics over I, 000 µg/L that are not on the treatability envelope list.

- Bis-2 phthalate exceeds the Toxic Air Pollutants (TAPs) and ASIL limit, which would require more air monitoring (Ecology).

- Projected mercury TCLP (Toxic Characteristic Leach Procedure) levels may exceed Land Disposal Restriction (LDR) limits.

- Regulatory issues (i.e., revised Delisting Petition) are more difficult to address than Treatability Envelope (treatment capability) issues.

- Chloride concentrations with high levels of ammonia remains a process throughput and corrosion concern.

- The projected effluent volumes (8. 78 Mgal/year) would require over a year to process at ETF at the current process throughput of 4 Mgal/year, given other existing sources (generators).

The preliminary analysis indicated that the projected EMF effluent volume (8.7 Mgal/year, which reflects a peak output, not an average) significantly exceeds the current ETF treatment capacity (~4 Mgal/yr), and the TOPSim modeled volume does not take into account all current or future effluents to be treated at ETF.

How does this support construction of EMF? Is there always an assumption of an endless supply of money for the next design integration failure? The incompatibility with interfacing facilities is one reason for not allowing fast track design-build (prohibited for future projects, but not WTP), because you can build yourself into an unworkable and wasteful corner.

I-2-10
DFLAW-Inspired Cesium Removal and Orphan Waste Storage is Relevant ORP has elected to design and operate both a Low Activity Waste Pretreatment System (LAWPS) and a Tank Side Cesium Removal System (TSCR) in order to provide feed to LAW vitrification in the absence of WTP Pretreatment Facility and HLW Vitrification Operations. This means that feed to the EMF equipment covered in this permit modification requires additional, un-reviewed, actions. The "stove piping" of this project means that LAWPS will be accumulating new waste forms, consisting of up to 120 columns loaded cesium ion exchange columns (IXC) that will contain up to 300,000 curies of Cs-137 each (per RPP-RPT-60850, pages 18 and 20). The LAWPS project will have to design and build a new cesium ion exchange column storage pad. The LAWPS loaded ion exchange column (IXC) interim storage pad design and construction estimated cost and schedule are described in the LAWPS proposal as an operating expense funded item (excluded from the detailed capital asset cost estimate and more rigorous review processes).

Further, the Tank Side Cesium Removal Project will have its own IXC interim storage pad, which the LAWPS describes as being excluded from the LAWPS scope (RPP-RPT-60850, page 27).

According to the TSCR Specification (RPP-SPEC-61910), the TSCR "demonstration" will provide an initial set of shielded ion-exchange columns that are fully charged with ion exchange media ready to treat a minimum of 170,000 gallons of tank AP-107 waste having a cesium concentration corresponding to at least 100,000 curies (Ci) of cesium. The TSCR specification calls for the ion exchange column to be transported by others and for the TSCR interim storage pad to also be provided by others. See RPP-SPEC-61910, page 3-1.

Operation of EMF requires multiple new items well beyond the scope of the WTP Pretreatment and High Level Waste facilities, including two new storage pads, associated IXC storage and exposure risk for personnel for at least 50 years, and unknown future disposal. Ecology should consider that there will be associated new Dangerous Waste Permits, because cesium-137 inevitably decays to the EPA-regulated toxic metal, barium.

Ecology and EPA should consider that DOE has no Environmental Impact Statement that covers the decision to accumulate orphan cesium for storage. DOE has further not addressed the nuisance security risk associated with setting out loaded cesium ion exchange columns on accessible storage pads. DOE has further not addressed the cost of

writing new safety analyses for the new storage pads. The consequences of DFLAW/EMF ad hoc decisions matter. Document TOC-RORI-18-023, June 11, 2018, shows that tank farm projects have not developed a design, permitting, or storage strategy for the TSCR cesium storage pad, but ORP plans on installing this pad (in violation of NEPA) in August of 2019.

(Of note is that the Savannah River small column cesium ion exchange process cited as the parent and basis for the ORP TSCR demonstration has been suspended.)

Ecology should consider that ORP is now considering another entirely new project to mitigate the failure of WTP Pretreatment. This time the scheme is to vitrify the loaded TSCR/LAWPS non-elutable ion exchange resins. In the case of crystalline silica-titanate resin (CST) "the impacts of introducing considerable levels ofNb205 and Ti02 into HLW glasses will require further investigation." See VSL-18R4380-1, April 30, 2018, Final Report, Vitrification of Inorganic Ion Exchange Media. How much more would it cost to break open the shielded ion exchange columns to transfer the loaded resin to the WTP HLW melters?

DOE Assistant Secretary Anne White recently observed to the House of Representatives Nuclear Cleanup Caucus event that DOE's environmental liabilities are "growing, not getting smaller." No wonder!

Multiple knee-jerk actions accumulate doses to personnel (contrary to ALARA) and it is very costly to keep moving the isotopes around the site. A more holistic evaluation of the site disposal plans is needed.

I-2-11
LAW Quality Assurance Issues are Relevant Condition Report 24590-WTP-GCA-MGT-18-00563 shows that bulk materials with Indeterminate Quality are installed in safety (Q) Applications. The problem also includes identical valves labeled Q and CM returned to stock and co-mingled (24590-WTP-GCAMGT-18-00568). Ecology should not permit further construction until the extent of condition is known and the problem is resolved.

I-2-12
LAW Facility Problems are Relevant Condition Report 24590-WTP-GCA-MGT-18-00616 identifies that there is a lot of pipe insulation that is damaged throughout the LAW facility, presenting a need for rework. This is an example of facility features that were paid for (and for which fee is about to be paid again), but are poorly managed/maintained. How many other items are poorly preserved and will present interface problems for EMF operations? ORP may not know, given the ongoing stove-piped and statistical approaches to extent of condition reviews. What is not known matters.

I-2-13
Electrical Safety Issues are Relevant Letter 18-WTP-0061 identifies systemic electrical safety problems at WTP that have been under-reported by ORP management, which elected to hold a meeting instead of issuing a recommended PLl Finding. These issues should be resolved before more construction is allowed, and before someone is maimed or killed.

I-2-14
Sodium Additions at WTP and In Tank Farms are Relevant WRPS-1802089, FYI 9-FY20 Planning Scenario, identifies that, in order to produce feed for DFLAW, the tank side cesium removal demonstration will add 45,000 gallons of 50 wt% sodium hydroxide to 170,000 gallons of tank waste feed, essentially diluting it in order to process it. At 5 molar sodium, the 170,000 gallons of feed will contain 74 metric tons of sodium in solution. 45,000 gallons of 50 wt% sodium hydroxide contains 75 metric tons more of sodium, which essentially dilutes the waste by a factor of 2. This may be due to the fact that ORP deleted the dedicated feed tank from the LAWPS/TCSR design, and is instead diluting the heel in the designated DST feed tank. This is contrary to requirements for waste minimization, and is in effect, diluting the HLW heel in the DST feed tank to tum it into low activity waste.

WTP will also add sodium hydroxide to EMF concentrate that is recycled to the LAW Vitrification feed tank, to meet chemical specifications and prevent corrosion.

WTP will also add sodium hydroxide to EMF feed, when the EMF is out of service, in order to send it to the tank farms and keep the melters operating. The double shell tanks will have an increased propensity for pitting, according to RPP-TE-58464, due to chloride and fluoride concentrations, which are elevated in EMF streams.

All of these items are contrary to waste minimization. Non-waste sodium additions that are instituted for DFLA W should be quantified, so that Ecology can understand the extent of the dilutions.

I-2-15
The Defense Nuclear Facilities Safety Board (DNFSB) has given up The DNFSB recently wrote a letter ofwelcome2 to the new DOE Assistant Secretary for Environmental Management. The DNFSB stated that their mission is to provide independent analysis, advice, and recommendations to DOE. 18 years of review and advice has not been successful in reviewing in safety, quality, or economic viability into the WTP/ORP flow sheet. The only remarks DNFSB made about their oversight of safety at WTP are "The overall strategy to treat high-level waste appears to be undergoing significant change, while the infrastructure associated with storage systems continues to age."

Response To: Anonymous Citizen

I-2-1
The vessels in question have been re-purposed after extensive evaluation of the safety and function in their new role at the Effluent Management Facility. In addition, the IQRPE has evaluated the vessels and has stated that the vessels are adequate and will serve their re-intended purpose during their anticipated service life.

(a) - The movement of vessels from the Pretreatment Facility for use in the Effluent Management Facility does not invalidate the Dangerous Waste Permit. In the normal course of construction design changes are made frequently to the Waste Treatment Plant. As these design changes occur the permittee will submit the necessary permit modifications to detail the new design and will wait for approval of the modifications before they proceed with construction. This permit modification process is outlined in the Washington State Dangerous Waste Regulations, Washington Administrative Code (WAC) 173-303-830.

(b) - Only two vessels (5A and 5B) will have internal Pulse Jet Mixers (PJM) structures. The IQRPE report states that for vessels 5A/B, the PJMs and their support structures do not serve any purpose for their re-use. The vent holes drilled through the top heads of the PJMs will not have any detrimental effect on the parent vessels. The PJMs in fact will have a dampening effect thus reducing the seismic sloshing forces. The vessels have bottom drains allowing them to be flushed and drained to remove any residual contamination.

(c) - The corrosion evaluation (CE) report for the DFLAW vessels (5A and 5B) was performed based on the expected operating conditions throughout the 40 year design life of the vessels by qualified and experienced personnel. The corrosion allowances recommended and provided for DFLAW vessels are acceptable and it is appropriate to state that the vessels are acceptable for the re-intended purpose during their design life.

I-2-2
Based on the information that Ecology is aware of at this time the structural integrity of EMF is acceptable. Quality verification packages, if applicable to steel purchased, fabricated, and installed for EMF, include sufficient documentation to adequately justify the appropriate level of quality assurance has been performed.

The IQRPE scope of work and jurisdiction pertains to Dangerous Waste Permitted components which are designed, procured, fabricated, and installed in compliance with the applicable codes, standards, regulations, and specification requirements.

Ecology is not involved in how the Department of Energy manages their contractors and implementation of their internal procedures and requirements. Oversight of Bechtel is a requirement of the Department of Energy under Federal Acquisition Requirements.

I-2-3
The information shown as "TBD" within the Process Corrosion Data Sheets (PCDS) attached to the referenced Corrosion Evaluation is not essential for corrosion/erosion consideration and material recommendation. The constituents and conditions necessary to ensure proper material selection/recommendation are included and are sufficient for completion of the Corrosion Evaluation.

As stated in the corrosion evaluation report after the DFLAW PIBOD was issued, any variance in the values between the PIBOD and PCDS associated with streams and stream characteristics used to evaluate corrosion and erosion were reviewed and evaluated. It was determined after this evaluation that the Corrosion Evaluations were bounding and the materials selection recommendations remained as initially determined.

During development of Process Corrosion Data Sheet referenced on the corrosion evaluations it was determined that most off-normal events are of short duration and have no effect on material selection.

I-2-4
Although referenced supplier submittals are identified using alpha revision designators, supplier submittals are not considered "preliminary" design documents. The document status of the supplier submittal is indicated by the code identified on the supplier document status stamp (i.e., Code Status 1, 2, 3 or 4). Code Status 1 delineated on the vendor submittal means WTP has reviewed with no comment in accordance with WTP project requirements and Issued for Construction design deliverables. Committed calculations (designated with alpha revisions) may be utilized in final design documents prior to being confirmed. These calculations contain assumptions that require verification. Each of the vendor equipment design drawings included in the BOF-010 permit package (8C.2018.7D) with alpha revision numbers (e.g. 24590-CM-POA-MVSC-00007-02-00001 00C) are Code Status 1 drawings and are issued for construction.

I-2-5
Ecology provides environmental regulatory oversight of construction and eventual operations for treatment and storage of dangerous waste at the WTP. Commercial quality grade of equipment is a DOE requirement and DOE has approved BNI's Commercial Grade Dedication Program.

I-2-6
The IDF Permit is outside the scope of this modification.

Permit condition III.10.C.3.e.vi requires that wastes generated at the WTP Unit meet the receiving authorized Transportation, Storage, and Disposal (TSD) facility waste acceptance criteria prior to a waste stream transfer. Ecology is actively working with the permittees to ensure all the necessary permitting is completed to support the proper management and disposal of the waste generated during operation to support the DFLAW configuration.

I-2-7
The only safety significant items in the Effluent Management Facility are in a non-permitted system. If DOE makes decisions that directly affect permitting, Ecology will make sure that the necessary details and information is evaluated and appropriately incorporated into the permit.

I-2-8
The design of the LAW Facility is outside of the scope of this permit modification. Ecology provides environmental regulatory oversight of construction and eventual operation of the treatment and storage of dangerous waste at the WTP.

Ecology is not involved in how the Department of Energy manages their contractors and implementation of their internal procedures and requirements. Oversight of Bechtel is a requirement of the Department of Energy under Federal Acquisition Requirements.

I-2-9
Potential modification to the LERF/ETF permit are outside the scope of this permit modification.

Permit condition III.10.C.3.e.vi requires that wastes generated at the WTP meet the receiving facility's waste acceptance criteria prior to a waste transfer. If the Overhead Sampling Vessels (DEP-VSL-00004A/B) indicate that the effluents do not meet the LERF/ETF waste acceptance criteria, the effluents can be transferred back to the Evaporator Feed Vessel (DEP-VSL-00002) and be returned to the LAW Facility for additional processing.

I-2-10
Low Activity Waste Pretreatment System (LAWPS) and a Tank Side Cesium Removal System (TSCR) are outside the scope of this permit modification.

I-2-11
The LAW Facility is outside the scope of this permit modification.

I-2-12
The LAW Facility is outside the scope of this permit modification.

BNI has a preservation and maintenance program that they are currently following to ensure that weathered or damaged portions of the WTP Facility are either repaired or replaced prior to operations of the system. Ecology has been actively involved with the development of this program and is aware of the importance of proper upkeep and/or replacement of equipment prior to operations at the WTP Facilities.

I-2-13
Worker safety is important to Ecology. However, worker safety is self-regulated by the Department of Energy. Ecology maintains a site presence on the construction site and keeps in close contact with the Department of Energy to be aware of safety and quality concerns.

I-2-14
EMF intends to limit sodium hydroxide flushing to the LAW Facility. These flushes will occur after an EMF concentrate transfer in the event that the tank farm feed is not available. This will not be a continuous operation. EMF will add Sodium Nitrite for corrosion control on returns to tank farms to reduce the need for idling the melters during short term evaporator outages. This supports steady state melter operations.

Tank Farm feed preparation for Tank Side Cesium Removal System (TSCR) are not the subject of the permit modification and are outside of the scope.

I-2-15
Ecology provides environmental regulatory oversight of construction and eventual operations at the WTP. We have no involvement or oversight regarding contractual negotiations that occur between the U.S. Department of Energy (DOE) and their contractors.

Appendix A: Copies of all public notices

Public notices for this comment period:

- Focus Sheet
- Classified advertisement in the *Tri-City Herald*
- Notice sent to the Hanford-Info email list

Waste Treatment Plant Permit Modification for Effluent Management Facility Equipment

Public comment period

June 4 through July 18, 2018

Submit comments

Electronically (preferred) via:

http://wt.ecology.commentinput.com/?id=9HN3r

By U.S. mail, or hand-delivery:

Daina McFadden
3100 Port of Benton Blvd
Richland WA 99354

Public hearing

A public hearing is not scheduled, but if there is enough interest, we will consider holding one. To request a hearing or for more information, contact:

Daina McFadden
509-372-7950
Hanford@ecy.wa.gov

For more information

Dan McDonald
509-372-7950
Hanford@ecy.wa.gov

Public comment invited

The Washington State Department of Ecology (Ecology) is proposing a modification to the *Hanford Facility Resource Conservation and Recovery Act (RCRA) Permit*, Revision 8C. The proposed change affects the *Dangerous Waste Portion for the Treatment, Storage, and Disposal of Dangerous Waste* for the Waste Treatment and Immobilization Plant (WTP), located in Part III, Operating Unit 10.

The permittees are:

U.S. Department of Energy Office of River Protection
P.O. Box 450
Richland, Washington 99352

Bechtel National, Inc.
2435 Stevens Center Place
Richland, Washington 99354

Ecology invites you to review and comment on this proposed permit modification. The comment period begins June 4, 2018, and ends July 18, 2018.

This proposal is one of many changes to the original WTP Permit. Periodic updates allow the permittees to continue construction while designing other parts of the WTP.

Permit modification overview

This draft agency-initiated permit modification (8C.2018.7D) will allow the permittees to install vessels, preheaters, exhausters, high efficiency particulate air (HEPA) filters, and critical piping associated with the Effluent Management Facility.

This proposed modification includes engineering design, technical documentation, and information for the following equipment to be installed at the Effluent Management Facility:

- Overhead sampling vessels (DEP-VSL-00004A/B)
- Process condensate lag storage vessels (DEP-VSL-00005A/B)
- High efficiency particulate air (HEPA) filter preheaters (DVP-HTR-00001A/B)
- HEPA filter housings (DVP-HEPA-00003A/B and DEP-HEPA-00004A/B)
- Exhausters (DVP-EXHR-00001A/B)
- Critical piping for ancillary equipment

The Effluent Management Facility

Why this cleanup matters

The proposed permit modification affects the Effluent Management Facility. Construction of the facility will allow for the treatment of effluents generated at the Low Activity Waste Facility and Analytical

Laboratory. Once treatment has been completed, the effluents can be transferred to the Low Activity Waste Facility for reprocessing, or the Liquid Effluent Retention Facility/Effluent Treatment Facility for additional treatment, or returned to the tank farms.

Reviewing the proposed changes

Ecology invites to you to review and comment on this proposed Effluent Management Facility Equipment permit modification to the WTP Permit. Only those portions that are being modified are open for public comment and review. All other portions remain in effect. See page 1 for comment period dates and information on how to submit comments.

Copies of the proposed modification and supporting documentation will be available during the public comment period online at http://www.hanford.gov/pageaction.cfm/calendar?IndEventId=8533, or on Ecology's website at https://www.ecology.wa.gov/Waste-Toxics/Nuclear-waste/Public-comment-periods. The documents will also be available at the Hanford Public Information Repositories listed on the last page.

Ecology will consider and respond to all significant comments received during the public comment period. These responses will be documented in a response to comments document at the completion of the public comment period.

Waste Treatment Plant

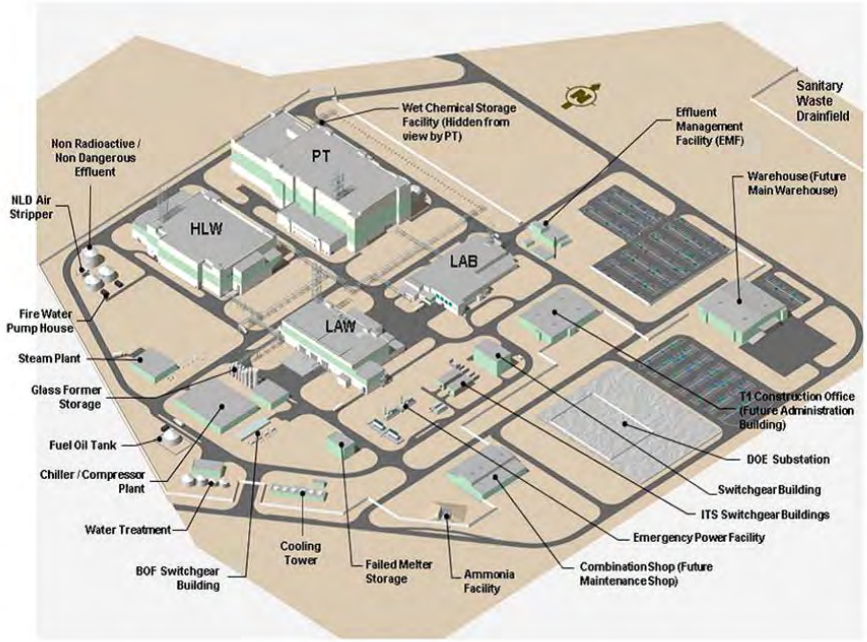

Special accommodations

To request ADA accommodation including materials in a format for the visually impaired, call Ecology at 509-372-7950 or visit https://ecology.wa.gov/accessibility. People with impaired hearing may call Washington Relay Service at 711. People with speech disability may call TTY at 877-833-6341.

Nuclear Waste Program
3100 Port of Benton Blvd
Richland, WA 99354

Hanford's Information Repositories and Document Review Locations

Washington

Richland

Ecology Nuclear Waste Program
Resource Center
3100 Port of Benton Blvd.
Richland, WA 99354
509-372-7950

U.S. Department of Energy
Administrative Record
2440 Stevens Drive, Room 1101
Richland, WA 99354
509-376-2530

Washington State University Tri-Cities
Department of Energy Reading Room
2770 Crimson Way, Room 101L
Richland, WA 99354
509-375-7443

Seattle

University of Washington
Suzzallo Library
P.O. Box 352900
Seattle, WA 98195
206-543-5597

Spokane

Gonzaga University
Foley Center
502 E Boone Avenue
Spokane, WA 99258
509-313-6110

Oregon

Portland

Portland State University
Millar Library
1875 SW Park Avenue
Portland, OR 97207
503-725-4542

CLASSIFIED LEGALS

Legals

Legals & Public Notices

CITY OF PASCO
NOTICE OF PUBLIC HEARING
Pursuant to RCW 35.94.040, notice is hereby given that the City Council of the City of Pasco, Washington, will hold a public hearing on Monday, June 4, 2018 to consider whether real property, originally acquired for public utility purposes, is surplus to City needs and not required for providing continued public utility service. The public hearing will be held at 7:00 p.m. in the City Council Chambers at 525 N. 3rd Avenue.
The property to be considered (1.39 acres) is legally described as: River Hill Addition, Lot 1. The parcel is located between 5420 W. Dradie Street and 5318 W. Dradie Street.
Daniela Erickson
City Clerk
3660897 06/03/2018

Kennewick Irrigation District (KID)
Vendor List
Per RCW 87.03.437 and RCW 39.04.190 notice is hereby given that the KID is now updating its Vendor List to award contracts for materials, equipment, supplies or services up to $50,000 in lieu of the requirements for formal sealed bidding. The Vendor List shall consist of all responsible vendors who have requested to be on this list, and where required by law are properly licensed or registered to provide materials, equipment, supplies or perform such services in this state. If you are currently on our vendor list, you do not need to reapply. To be added on our 2018 Vendor List go to: www.kid.org, click "Other Business" then "Vendors" and complete the Vendor List Form. KID retains the right to use the sealed bid or any other legal process for future purchases at the District's option. Minority, women-owned, federally disadvantaged and small businesses are encouraged to apply. For KID projects covered by Federal or State funding, Vendors must also not be included on the list of parties suspended or debarred from doing business with the Federal or State government. If you do not have access to the internet you may contact Brad at (509) 586-6012 for assistance.
#3695334 06/03 & 06/10/2018

Sylkie S. Reynoso is looking for Jorge father of Sylern J. Nieblas to present in court 06/18/2018 at 9:30am. For name change of child.
#3683574 05/27, 06/03, 06/10, & 06/17/2018

PORT OF BENTON
NOTICE OF PUBLIC HEARING
PUBLIC NOTICE IS HEREBY GIVEN that the Port of Benton Commission will hold a Public Hearing at its regular Commission Meeting, Wednesday, June 13, 2018, at 8:35 a.m., at the Port of Benton Commission Meeting Room, 3250 Port of Benton Boulevard, Richland, Washington, for the purpose of receiving public comment on the Port of Benton Six Year Transportation Improvement Plan for the years 2019 - 2024, inclusive.
Dated at Richland, Washington this 30th day of May, 2018.
/s/
Robert D. Larson
Commission Secretary
#3691612 06/03/2018

Legals & Public Notices

CITY OF KENNEWICK HISTORIC PRESERVATION COMMISSION
NOTICE OF PUBLIC HEARING
JUNE 19, 2018 - 4:30 p.m.
The City of Kennewick Historic Preservation Commission will hold a Public Hearing on Tuesday, June 19, 2018, at City Hall, Cascade Conference Room, 210 West 6th Avenue, at 4:30 p.m. or as soon as possible thereafter, to receive public comment on an application to add the home at 418 E. 3rd Avenue to the Kenewick Register of Historic Places. Staff will be presenting their analysis and the Historic Preservation Commission will make a decision on the item.
Written comments may be addressed to Wes Romine and submitted to wes.romine@ci.kennewick.wa.us or mailed to PO Box 6108, Kennewick, WA 99336 no later than 4:30 p.m., June 11, 2018 to be included in the staff report. Comments after June 11, 2018 can be submitted at the Public Hearing on June 19, 2018. For questions, please call Wes Romine at (509) 585-4558.
The City of Kennewick welcomes full participation in public meeting by all citizens. No qualified individual with a disability shall be excluded or denied the benefit of participating in such meetings. If you wish to use auxiliary aids or require assistance to comment at this public meeting, please contact Wes Romine at (509) 585-4558 or TDD (509) 585-4425 or through the Washington Relay Service Center TTY at #711 at least ten days prior to the date of the meeting to make arrangements for special needs.
#3693009 06/03/2018

WAHLUKE SCHOOL DISTRICT, MATTAWA, WASHINGTON. NOTICE OF REQUEST FOR PROPOSALS FOR PROJECT-MANAGEMENT SERVICES TO ASSIST WITH PRE-BOND PLANNING FOR 2019 CAPITAL BOND, WITH THE POTENTIAL TO PROVIDE CONSTRUCTION-MANAGEMENT SERVICES DURING POST-BOND PHASE IF DESIRED BY THE DISTRICT. The District is seeking applicants to provide project-management, and potentially construction-management, services related to a planned bond measure and potential capital facilities projects. For information regarding this request and submission requirements, visit the District's website at www.wsd73.wednet.edu or contact District Director of Business and Operations Travis Belisle at tbelisle@wahluke.net or (509) 932-4565.
#3685893 05/28 & 06/03/2018

CITY OF RICHLAND
NOTICE OF PUBLIC HEARING
Notice is hereby given that the Richland City Council will conduct a public hearing at its regular meeting on Tuesday, June 5, 2018 at 7:30 p.m. in the Council Chamber, Richland City Hall, 505 Swift Boulevard, Richland, Washington.The purpose of the hearing is to receive public comments regarding the budget appropriations to the Water Fund. All persons interested may appear and be heard. Comments may also be emailed to sabrinamelendrez@ci.richland.wa.us. Written comments, addressed to Public Works, should be received no later than 5:00 p.m. on June 5, 2018. A copy of the proposal will be available for review at the City Clerk's Office or on the City's website at www.ci.richland.wa.us beginning Friday, June 1, 2018. For more information, contact the Public Works Office at (509) 942-7500 or at smelendrez@ci.richland.wa.us.
#3688848 06/03/2018

Legals & Public Notices

CITY OF RICHLAND
NOTICE OF PUBLIC HEARING
Notice is hereby given that the Richland City Council will conduct a public hearing at its regular meeting on Tuesday, June 5, 2018 at 7:30 p.m. in the Council Chamber, Richland City Hall, 505 Swift Boulevard, Richland, Washington. The purpose of the hearing is to receive public comments regarding the vacation of a portion of Logston Boulevard. All persons interested may appear and be heard. Comments may be emailed to smelendrez@ci.richland.wa.us. Written comments, addressed to Sabrina Melendrez, should be received no later than 5:00 p.m. on June 5, 2018. A copy of the proposed vacation will be available for review at the City Clerk's Office or on the City's website at www.ci.richland.wa.us beginning Friday, June 1, 2018. For more information, contact Sabrina Melendrez at (509) 942-7500 or at smelendrez@ci.richland.wa.us.
#3688765 06/03/2018

INVITATION TO BID
The City Of West Richland will receive sealed bids for the S. 38TH AVE/MT. ADAMS VIEW DR IMPROVEMENTS at the Municipal Services Facility, 3100 Belmont Blvd, Suite 102, West Richland, Washington, 99353 until Tuesday, June 12, 2018 at 11:00 a.m.
The project consists of constructing 1.4 miles of new rural roadway. The work involves clearing and grubbing, roadway excavation, embankment and compaction, crushed surfacing top and base course, HMA ½" cement concrete traffic curb and gutter, cement concrete curb ramp, installation of catch basins, drywells, storm drain pipe, landscape restoration, utility conduit, seeding mulch, striping and related work in accordance with the technical specifications, drawings and contract documents.
All bid proposals shall be accompanied by a bid proposal deposit in cash, certified check, cashier's check, or surety bond in an amount equal to five percent (5%) of the amount of such bid proposal. Should the successful Bidder fail to enter into such contract and furnish satisfactory performance bond or quality assurance submittals within the time stated in the contract documents, the bid proposal deposit shall be forfeited to the City of West Richland. Each Bidder shall warrant that he has not entered into collusion with another bidder or any other person, and does not discriminate in any manner against any person based solely on race, color, sex or creed.
Only properly executed proposals submitted on the forms furnished by the City of West Richland will be accepted. The City of West Richland reserves the right to reject any or all bids, to waive any informality, to accept any bid deemed to be responsive in the best interest of the City of West Richland, and reserves the right to re-advertise for new proposals.
Upon request each firm, company, and/or corporation shall receive a CD containing a PDF of all contract documents, specifications and plans by contacting the Public Works Department of the City of West Richland by either phone, (509)967-5434, email: ilka@westrichland.org or by mail, 3100 Belmont Blvd., Suite 102, West Richland, Washington.
This project includes Federal Funds and is subject to the wage provisions of the Washington State Public Works Laws, Federal Davis-Bacon, and related acts.
The City of West Richland is an Equal

Legals & Public Notices

Opportunity Employer, Minority and Women-Owned businesses are encouraged to bid.
The City of West Richland in accordance with Title VI of the Civil Rights Act of 1964 and 78 Stat. 252, 42 USC 2000d–42 and Title 49, Code of Federal Regulations, Department of Transportation, Subtitle A, Office of the Secretary, Part 21, Nondiscrimination in Federally-Assisted Programs of the Department of Transportation issued pursuant to such Act, hereby notifies all bidders that it will affirmatively ensure that any contract entered into pursuant to this advertisement, disadvantaged business enterprises as defined at 49 CFR Part 26 will be afforded full opportunity to submit bids in response to this invitation and will not be discriminated against on the grounds of race, color, national origin, or sex in consideration for an award.
#3666879 05/20, 05/27, & 06/03/2018

CITY OF WEST RICHLAND
WELL NO. 11 WELLHOUSE AND TRANSMISSION MAIN
BENTON COUNTRY WASHINGTON
INVITATION TO BID
The City Of West Richland will receive sealed bids for the Well No. 11 Wellhouse And Transmission Main at the City of West Richland, Public Works Building, 3100 Belmont Blvd., Suite 102, West Richland, Washington 99353 until 10 a.m., June 12, 2018.
This project consists of the construction of a new wellhouse and transmission main for municipal drinking water. The wellhouse is a CMU building with HVAC, chlorination equipment, 300 HP pump, piping, and appurtenances. Site improvements include grading, paving, and fencing. All in accordance with the technical specifications, drawings, and contract documents.
All bid proposals shall be accompanied by a bid proposal deposit in cash, certified check, cashier's check, or surety bond in an amount equal to five percent (5%) of the amount of such bid proposal. Should the successful Bidder fail to enter into such contract and furnish satisfactory performance bond or quality assurance submittals within the time stated in the contract documents, the bid proposal deposit shall be forfeited to the City of West Richland. Each Bidder shall warrant that he has not entered into collusion with another bidder or any other person, and does not discriminate in any manner against any person based solely on race, color, sex, or creed.
Upon request each firm, company, and/or corporation shall receive a PDF, at no cost, of all contract documents, specifications and plans by contacting the Public Works Department of the City of West Richland by either phone, (509)967-5434, e-mail: ilka@westrichland.org, or by mail: 3100 Belmont Blvd., Suite 201 West Richland, Washington 99353. For information about the project, contact the City Engineer, Andrew Woodruff, phone: (509) 967-5434.
Only properly executed proposals submitted on the forms furnished by the City of West Richland will be accepted. The City of West Richland reserves the right to reject any or all bids, to waive any informalities, to accept any bid deemed to be responsive in the best interest of the City of West Richland and reserves the right to readvertise for new proposals.
The City of West Richland is an Equal Opportunity and Affirmative Action Employer. Small, Minority and Women-

Legals & Public Notices

owned businesses are encouraged to bid.
This project is funded in part through the Washington State Drinking Water State Revolving Fund program with federal funds from the Environmental Protection Agency. Neither the State of Washington nor any of its departments or employees are, or shall be, a party to any contract or subcontract resulting from this solicitation for bids.
All work performed on this project will be subject to the higher of the prevailing state or federal wage rates.
The City of West Richland, in accordance with Title VI of the Civil Rights Act of 1964, 79 Stat. 252, 42 U.S.C. 2000d to 2000d-4 and Title 49, Code of Federal Regulations, Department of Transportation, Subtitle A, Office of the Secretary, Part 21, Nondiscrimination in Federally assisted programs of the Department of Transportation issued pursuant to such Act, hereby notifies al bidders that it will affirmatively ensure that in any contract entered into pursuant to this advertisement, disadvantaged business enterprises as defined at 49 CFR Part 23 will be afforded full opportunity to submit bids in.
#3665062 05/20, 05/27, & 06/03/2018

Waste Treatment Plant Permit Modification for Effluent Management Facility Equipment
Public comment invited
The Washington State Department of Ecology (Ecology) is proposing a modification to the Hanford Facility Resource Conservation and Recovery Act (RCRA) Permit, Revision 8C. The proposed change affects the Dangerous Waste Portion for the Treatment, Storage, and Disposal of Dangerous Waste for the Waste Treatment and Immobilization Plant (WTP), located in Part III, Operating Unit 10.
The permittees are:
U.S. Department of Energy Office of River Protection
P.O. Box 450
Richland, Washington 99352
Bechtel National, Inc.
2435 Stevens Center Place
Richland, Washington 99354
Ecology invites you to review and comment on this proposed permit modification. The comment period begins June 4, 2018, and ends July 18, 2018. This proposal is one of many changes to the original WTP Permit. Periodic updates allow the permittees to continue construction while designing other parts of the WTP.
Submit comments electronically (preferred) via:
http://wt.ecology.commentinput.com/?id=9HN3r
By U.S. mail, or hand-delivery:
Daina McFadden
3100 Port of Benton Blvd
Richland WA 99354
This draft agency-initiated permit modification (8C.2018.7D) will allow the permittees to install vessels, preheaters; exhausters, high efficiency particulate air (HEPA) filters, and critical piping associated with the Effluent Management Facility.
This proposed modification includes engineering design, technical documentation, and information for the following equipment to be installed at the Effluent Management Facility:
· Overhead sampling vessels (DEP-VSL-00004A/B)
· Process condensate lag storage vessels (DEP-VSL-00005A/B)
· High efficiency particulate air (HEPA) filter preheaters (DVP-HTR-00001A/B)
· HEPA filter housings (DVP-HEPA-00003A/B and DEP-HEPA-00004A/B)

Legals & Public Notices

· Exhausters (DVP-EXHR-00001A/B)
· Critical piping for ancillary equipment
The proposed permit modification affects the Effluent Management Facility. Construction of the facility will allow for the treatment of effluents generated at the Low Activity Waste Facility and Analytical Laboratory. Once treatment has been completed, the effluents can be transferred to the Low Activity Waste Facility for reprocessing, or the Liquid Effluent Retention Facility/Effluent Treatment Facility for additional treatment, or returned to the tank farms.
Ecology invites to you to review and comment on this proposed Effluent Management Facility Equipment permit modification to the WTP Permit. Only those portions that are being modified are open for public comment and review. All other portions remain in effect. See above for comment period dates and information on how to submit comments.
Copies of the proposed modification and supporting documentation will be available during the public comment period online at http://www.hanford.gov/pageaction.cfm/calendar?IndEventId=8533, or on Ecology's website at https://www.ecology.wa.gov/Waste-Toxics/Nuclear-waste/Public-comment-periods. The documents will also be available at the Hanford Public Information Repositories listed below.
Ecology will consider and respond to all significant comments received during the public comment period. These responses will be documented in a response to comments document at the completion of the public comment period.
A public hearing is not scheduled, but if there is enough interest, we will consider holding one. To request a hearing, contact:
Daina McFadden, 509-372-7950, Hanford@ecy.wa.gov
For more information contact:
Dan McDonald, 509-372-7950, Hanford@ecy.wa.gov
To request materials in a format for the visually impaired, visit https://ecology.wa.gov/accessibility, call Ecology at 509-372-7950, Relay Service 711, or TTY 877-833-6341.
Hanford's Information Repositories and Document Review Locations
Richland, Washington
Ecology Nuclear Waste Program Resource Center
3100 Port of Benton Blvd.
Richland, WA 99354 509-372-7950
U.S. Department of Energy
Administrative Record
2440 Stevens Drive, Room 1101
Richland, WA 99354 509-376-2530
Washington State University Tri-Cities
Department of Energy Reading Room
2770 Crimson Way, Room 101L
Richland, WA 99354 509-375-7443
Seattle, Washington
University of Washington Suzzallo Library
P.O. Box 352900
Seattle, WA 98195 206-543-5597
Spokane, Washington
Gonzaga University Foley Center
502 E Boone Avenue
Spokane, WA 99258 509-313-6110
Oregon, Portland
Portland State University Millar Library
1875 SW Park Avenue
Portland, OR 97207 503-725-4542
#3675962 06/06/2018

Services
Promote your business!
Call 586-6181

To place your Legal Announcement, Call 585-7213.

From: McFadden, Daina (ECY)
To: HANFORD-INFO@LISTSERV.ECOLOGY.WA.GOV
Subject: Upcoming public comment period - 30 day advance notice
Date: Friday, May 4, 2018 9:24:26 AM

Waste Treatment Plant Permit Modification for Effluent Management Facility Equipment (BOF-010) 30-Day Advance Notice

The Washington State Department of Ecology is providing notification of a 45-day public comment period starting early June 2018. This comment period will address a permit modification to the *Hanford Facility Resource Conservation and Recovery Act (RCRA) Permit*, Revision 8C (Hanford Site-Wide Permit). The proposed change affects the *Dangerous Waste Portion for the Treatment, Storage, and Disposal of Dangerous Waste* for the Waste Treatment and Immobilization Plant. The Permittee(s) are the U.S. Department of Energy Office of River Protection and Bechtel National, Inc. The Waste Treatment and Immobilization Plant is located on the Hanford Site in southeastern Washington.

What Changes are Being Proposed?

This proposed modification includes engineering design, technical documentation, and information for the following equipment to be installed at the Effluent Management Facility: vessels, preheaters, filter housing, ancillary equipment, and exhausters.

Public Hearing

A public hearing is not scheduled, but if there is enough interest, we will consider holding one. To request a hearing or for more information, contact:

Daina McFadden
Hanford@ecy.wa.gov
509-372-7950

Ecology logo

Visit us on the web and follow our news and social media.

Subscribe or Unsubscribe

From: McFadden, Daina (ECY)
To: HANFORD-INFO@LISTSERV.ECOLOGY.WA.GOV
Subject: Public Comment Period starts Monday, June 4, 2018
Date: Friday, June 1, 2018 4:38:05 PM

Waste Treatment Plant Permit Modification for Effluent Management Facility Equipment (BOF-010) Public Comment Period Notification

The Washington State Department of Ecology is providing notification of a 45-day public comment period starting **June 4 through July 18, 2018**. This comment period will address proposed modifications to the *Dangerous Waste Portion for the Treatment, Storage, and Disposal of Dangerous Waste* for the Waste Treatment and Immobilization Plant. The Permittees are U.S Department of Energy Office of River Protection and Bechtel National, Inc. The Waste Treatment and Immobilization Plant is located on the Hanford Site in southeastern Washington.

What Changes are Being Proposed?

This draft Agency Initiated permit modification (8C.2018.7D) will allow the Permittees to install vessels, preheaters, exhausters, High Efficiency Particulate Air (HEPA) filter housings, and critical piping associated with the Effluent Management Facility (EMF).

This proposed modification includes engineering design, technical documentation and information for the following equipment to be installed at EMF:

- Overhead Sampling Vessels (DEP-VSL-00004A/B)
- Process Condensate Lag Storage Vessels (DEP-VSL-00005A/B)
- High Efficiency Particulate Air (HEPA) Filter Preheaters (DVP-HTR-00001A/B)
- HEPA Filter Housings (DVP-HEPA-00003A/B and DEP-HEPA-00004A/B)
- Exhausters (DVP-EXHR-00001A/B)
- Critical Piping for Ancillary Equipment

Construction of EMF will allow for the treatment of effluents generated at the Low Activity Waste Facility and Analytical Laboratory. Once treatment has been completed, the effluents can be transferred to the Low Activity Waste Facility for reprocessing, Liquid Effluent Retention Facility/Effluent Treatment Facility (LERF/ETF) for additional treatment, or returned to the Tank Farms.

How to Comment

Ecology invites you to review and comment on this proposed Waste Treatment and Immobilization Plant permit modification. Copies of the proposed modification are located in the Administrative Record and Information Repositories. In addition, the proposed modification is online at the Nuclear Waste Program public comment period page.

Please submit comments by **July 18, 2018**. Electronic submission (preferred):

http://wt.ecology.commentinput.com/?id=9HN3r

Mail or hand-deliver to:
Daina McFadden
3100 Port of Benton Blvd
Richland WA 99354
Fax 509-372-7971

Public Hearing

A public hearing is not scheduled, but if there is enough interest, we will consider holding one. To request a hearing or for more information, contact:

Daina McFadden
Hanford@ecy.wa.gov
509-372-7950

For more information, contact:
Dan McDonald
(509)372-7950
Hanford@ecy.wa.gov

Ecology logo

Visit us on the web and follow our news and social media.

Subscribe or Unsubscribe

WASTE TREATMENT AND IMMOBILIZATION PLANT
APPENDIX 1.0
WTP INTERIM COMPLIANCE SCHEDULE

CHANGE CONTROL LOG

Change Control Logs ensure that changes to this unit are performed in a methodical, controlled, coordinated, and transparent manner. Each unit addendum will have its own change control log with a modification history table. The "**Modification Number**" represents Ecology's method for tracking the different versions of the permit. This log will serve as an up to date record of modifications and version history of the unit.

Modification History Table

Appendices	Modification Date	Modification Number
Appendix 1.0	08/23/2018	8C.2018.4F
Appendix 1.1	11/28/2017	8C.2017.8F
Appendix 1.2	05/11/2018	24590-WTP-PCN-ENV-18-005
Appendix 1.3	08/23/2018	8C.2018.3F
Appendix 1.4	08/23/2018	8C.2018.4F
Appendix 1.5	11/28/2017	8C.2017.8F

This page intentionally left blank.

OPERATING UNIT GROUP 10
APPENDIX 1.0
WTP INTERIM COMPLIANCE SCHEDULE

This page intentionally left blank.

OPERATING UNIT GROUP 10
APPENDIX 1.0
WTP INTERIM COMPLIANCE SCHEDULE

Where information regarding treatment, management, and disposal of the radioactive source, byproduct material, and/or special nuclear components of mixed waste (as defined by the Atomic Energy Act of 1954, as amended) has been incorporated into this permit, it is not incorporated for the purpose of regulating the radiation hazards of such components under the authority of this permit and chapter 70.105 Revised Code of Washington. In the event of any conflict between Permit Condition III.10.A and any statement relating to the regulation of source, special nuclear, and byproduct material contained in portions of permit application that are incorporated into this permit, Permit Condition III.10.A will prevail.

This page intentionally left blank.

WASTE TREATMENT AND IMMOBILIZATION PLANT
APPENDIX 1.4
INTERIM COMPLIANCE SCHEDULE – WTP EFFLUENT MANAGEMENT FACILITY (EMF)

CHANGE CONTROL LOG

Change Control Logs ensure that changes to this unit are performed in a methodical, controlled, coordinated, and transparent manner. Each unit addendum will have its own change control log with a modification history table. The "**Modification Number**" represents Ecology's method for tracking the different versions of the permit. This log will serve as an up to date record of modifications and version history of the unit.

Modification History Table

Modification Date	Modification Number
08/23/2018	8C.2018.4F
09/05/2017	8C.2017.6F

This page intentionally left blank.

Appendix 1.4
Interim Compliance Schedule – WTP Effluent Management Facility (EMF)

	EMF Compliance Schedule Submittal	Interim Compliance Date
	III.10.C.2	
EMF-1	Submit documentation stating the EMF has been constructed in compliance with the Permit.	12/31/2020
	III.10.C.3	
EMF-3	Update and submit for approval Waste Analysis Plan and associated Quality Assurance Project Plan (Chapter 3A and 3B) to Ecology for review and approval.	6/30/2020
	III.10.C.5	
EMF-4	Update and submit for approval Procedures to Prevent Hazards and Inspection Schedule (Chapter 6 and Appendix 6A) to Ecology for review and approval.	6/30/2020
	III.10.C.6	
EMF-5	Update and submit the Contingency Plan (Chapter 7) to Ecology for review and approval.	6/30/2020
	III.10.C.7	
EMF-6	Update and submit Training Program (Chapter 8) to Ecology for review and approval.	6/30/2020
EMF-7	Submit under separate cover the actual WTP Dangerous Waste Training Plan for incorporation into Administrative Record.	6/30/2020
	III.10.C.8	
EMF-8	Update and submit the Closure Plan (Chapter 11) to Ecology for review and approval.	6/30/2020
	III.10.C.11	
EMF-9	Update and submit Risk Assessment Work Plan, revised in consultation with Ecology to address the DFLAW configuration.	6/30/2019
	Containers III.10.D.10	
EMF-11	Update and submit descriptions of container management practices (Appendix 4G) to Ecology for review and approval.	6/30/2020
	Prior to Installation III.10.E.9	
EMF-13	Update and submit engineering information for each dangerous waste tank (Appendix 4G) to Ecology for review and approval.	Complete
EMF-14	Update and submit engineering information for each tank system ancillary equipment (Appendix 4G) to Ecology for review and approval.	Complete
	Report of Progress	
EMF-45	Update and submit descriptions of tank management practices (Appendix 4G) to Ecology for review and approval.	6/30/2020

	EMF Compliance Schedule Submittal	Interim Compliance Date
	EMF Misc. Units Systems III.10.M.A	
EMF-16	Submit engineering information for EMF Miscellaneous Treatment Unit Systems.	Complete
	Final Compliance Date	
EMF-32	Final Compliance Date (Hot Commissioning Complete)	12/31/2023

Item	Designation	Qty.	Heat No.	Material	Item Description
1	BOTTOM HEAD	1		SA-240-304	2:1 SEMI-ELLIPT. HD, 168" ID, 2" SF 7/8" MIN THK AFTER FORMING, 1" NOM THK
2					
3					
4	SHELL	1		SA-240-304	1-1/4" THK 168" ID (531-3/4" SO) X 365" LG
5					
6					
7					
8					
9					
10	LIFTING LUG	2		SA-240-304	2" THK
11	LIFTING LUG EYE	4		SA-240-304	1-1/4" THK
12	TAILING LUG REPAD	1		SA-240-304	1/2" THK
13	TAILING LUG	1		SA-240-304	1-1/2" THK
14	TAILING LUG GUSSET	8		SA-240-304	1" THK
15	TAILING LUG EYE	2		SA-240-304	1-1/8" THK
16					
17					
18					
19					
20					
21					
22					
23					
24					
25					
26	JACKET	3		SA-240-304	1/2" THK 178-1/2" ID (562-3/8 SO)
27	JACKET CLOSURE	4		SA-240-304	1" THK 170-1/2" ID X 178-1/2" OD
28	JACKET HELICAL BAF	1		SA-240-304	1/4" THK X 4" FB
29	ELBOW	4		SA-403-304	6" SCH 80 (.432") L.R. B.W. 90 DEG ELBOW
30	JACKET PIPING	A/R		SA-312 304 SMLS	6" SCH 80 (.432")
31	BOTTOM HEAD JACKET	1		SA-240-304	1/2" THK 2:1 SE HEAD CAP, 110" OD, 86" MAJOR IR, 43" MINOR IR
32	BOTTOM HEAD JACKET CLOSURE	2		SA-240-304	1" THK
33	BOTTOM HEAD JACKET HELICAL BAF	1		SA-240-304	1/4" THK
34					
35	JACKET INTERCONNECT INSERT PLATE	1	1	SA-240-316	1" THK
36					
37					
38					
39					
40					
41					
42					
43					
44					
45					
46					
47					
48					
49					
50					
51					
52					
53	WEAR PLATE	6		SA-240-304	1-1/4" THK.
54					
55					
56					
57					
58					
59	LIFT LUG REPAD	2		SA-240-304	1-1/4" THK.
60	BOTTOM HEAD JACKET TRANSITION	1		SA-240-304	1" THK 2:1 SE HEAD CAP, 135" OD X 110" ID, 86" MAJOR IR, 43" MINOR IR
61	N49 INSERT	1		SA-240-304	3/4" THK.
62					
63					
64					
65					
66					
67					
68					
69					
70					
71					
72	NOZZLE N48 INSERT	1		SA-240-304	1" THK
73					
74					
75					
76	NAMEPLATE	1		SA-240-304	1/4" THK
77	NAMEPLATE BRACKET	1		SA-240-304	1/4" THK
78					
79					
80					
81	HEX PLUG	2		SA-182 316	1/4" NPT HEX PLUG
82	LIFTING LUG REINFORCEMENT PLATE	2		SA-240-304	1" THK
83					
84					
85					
86					
87					
88					
89					
90					
91					
92					
93					
94					
95					
96					
97					

NOTE:
ALL BILL OF MATERIAL ITEMS #100 AND HIGHER ARE NEW ITEMS

SEE DETAIL 14 SHEET 5 FOR NAMEPLATE AND STAMPING.

DESIGN DATA

Code	ASME SECTION VIII, DIVISION 1, 2001, 2003 ADDENDA
Design Conditions	Shellside
Design Pressure	15 PSIG & FV
Design Temperature	155 °F
MDMT	-23 °F
Hydrotest	20 PSIG
Corrosion Allowance	0.04"
Other NDE	SEE SPECIAL NOTES 5-8
Radiography	SPOT (UW11(b)); SEE SPECIAL NOTE 9
Insulation:	3" THK, BY OTHERS
Gasket Material:	1/8" THK EPDM
Fasteners:	SA193 B8M STUDS & SA194 8M NUTS

Item	Designation	Qty.	Heat No.	Material	Item Description
98					
99					
100	TOP HEAD	1		SA-240-304	2:1 SEMI-ELLIPT. HD, 168" ID, 2" SF, 17/32" MIN THK AFTER FORMING, 5/8" NOM THK
101	SKIRT	1		SA-240-304	3/4" THK 168" ID (530-3/16" SO) X APPROX. 84-15/16" LG
102	SKIRT BASE RING	1		SA-240-304	1-1/2" THK X 172-1/2" OD X 164-1/2" ID
103	SKIRT VENT	4		SA-312-304	4" SCH 40 (.237") PIPE X 6-1/2" LG
104	SKIRT ACCESS LIP	2		SA-240-304	3/8" THK X 24" ID (76-9/16" SO) X 4" LG
105	NOZ N11 PIPE SLEEVE	1		SA-312 304	8" SCH 80 (.500" WALL) X 4" LG
106	NOZ N11 SLEEVE GUIDE BAR	4		SA-240 304	1/4" THK X 3/8" X 4"
107					
108	GROUNDING LUG	4		SA-240 304	1/4" THK X 3" X 5"
109					
110	NOZ N01 BLIND	1		SA-182 304	24" ANSI 150# RF BLIND
111	NOZ N01 GASKET	1		EPDM	1/8" THK RING GASKET FOR 24" ANSI 150# PIPE FLANGE
112	NOZ N01 STUD	20		SA-193-B8M	1-1/4"-8NC X 7-1/4" LG
113	NOZ N01 NUT	40		SA-194-8M	1-1/4"-8NC HEAVY HEX
114	NOZ N01 REPAD	1		SA-240 304	5/8" THK X 5" WIDE
115	NOZ N01 DAVIT MAST	1		SA-312 304	2-1/2" SCH 40 (.203" WALL) X 37-3/8" LG, MITER ONE END @ 45 DEG
116	NOZ N01 DAVIT ARM	1		SA-312 304	2-1/2" SCH 40 (.203" WALL) X 22-3/16" LG, MITER ONE END @ 45 DEG
117	NOZ N01 DAVIT CAP	1		SA-403 304	2-1/2" SCH 40 (.203" WALL) B.W. PIPE CAP
118	NOZ N01 DAVIT GUSSET	1		SA-240 304	1/2" THK X 7" X 7"
119	NOZ N01 DAVIT SOCKET	1		SA-312 304	3" SCH 40 (.216" WALL) X 10" LG
120	NOZ N01 DAVIT COLLAR	1		SA-312 304	3" SCH 40 (.216" WALL) X 3/4" LG
121	NOZ N01 DAVIT ATTACHMENT PL	1		SA-240 304	3/4" THK X 8" X 5"
122	NOZ N01 DAVIT GREASE FITTING	1		SS 304	1/8" MALE NPT GREASE ZIRC
123	NOZ N01 DAVIT COVER LOOP	1		SA-479 304	1/2" OD ROUND BAR
124	NOZ N01 DAVIT EYEBOLT	1		SS 304	3/4" OD EYEBOLT w/10" LG SHANK, NUT & WASHER
125	DAVIT SHACKLE	1		SS 304	5/8" SHACKLE
126					
127					
128					
129					
130					
131	NOZ N05 ELBOW	2		SA-403 304	4" SCH 40 (.237") B.W. 90 DEG LONG RADIUS ELBOW, CUT TO REQ'D ANGLE
132	NOZ N05 INTERNAL PIPE	2		SA-312 304 SMLS	4" SCH 40 (.237" WALL) X (1) @ 26-1/8" & (1) @ 101-7/8" LG
133	INTERNAL REDUCING TEE	1		SA-403 304	4" SCH 40 (.237" WALL) X 2" SCH 40 (.154" WALL) OUTLET REDUCING B.W. TEE
134	EDUCTOR	2		SS316	2" FEMALE JACOBY-TARBOX TLA BODY EDUCTOR, MODEL TB-3925-T11FNPT
135	NIPPLE	2		SA-312 304	2" SCH 40 (.154" WALL) X 3" LG, THREAD ONE END
136	INTERNAL ELBOW	1		SA-403 304	4" SCH 40 (.237" WALL) X 2" SCH 40 (.154" WALL) 90 DEG LONG RADIUS REDUCING B.W. ELBOW
137	EDUCTOR PIPE SUPPORT	2		SA-240 304	1/2" THK
138					
139	NOZ N07 BLIND	1		SA-182 304	10" ANSI 150# RF BLIND
140	NOZ N07 GASKET	1		EPDM	1/8" THK RING GASKET FOR 10" ANSI 150# PIPE FLANGE
141	NOZ N07 STUD	12		SA-193-B8M	7/8"-9UNC X 5" LG
142	NOZ N07 NUT	24		SA-194-8M	7/8"-9UNC HEAVY HEX
143	NOZ N07 REPAD	1		SA-240 304	5/16" THK X 3" WIDE
144	INTERNAL SPRAY JET	1		SS316	MODEL GAMAJET VIII
145					
146					
147					
148					

NOTES

1. ALL FLANGE BOLT HOLES TO STRADDLE MAJOR VESSEL CENTERLINES.
2. EACH SECTION OF NOZZLE REPADS AND ALL REPADS CROSSING A WELD SEAM REQUIRE AN 1/8" NPT WEEP HOLE w/PLUG.
3. CONDUCT 15psi AIR TEST FOR ALL NOZZLE REPADS AND ALL REPADS CROSSING A WELD SEAM.
4. ALL WELDS TO BE CONTINUOUS UNLESS OTHERWISE SPECIFIED.
5. CLEAN HEAT TINT AREA WITH FLAPPER WHEEL.
6. ALL WELDS TO BE CLEANED INSIDE AND OUTSIDE WITH SS POWER WIRE BRUSH.
7. APPLY "NEVER-SEEZ" OR EQUAL TO ALL EXTERNAL FLANGE FASTENERS & DAVIT EYEBOLTS.
8. IMMEDIATELY PRIOR TO SHIPMENT CLEAN ALL INNER SURFACES OF DIRT, PAINT, SCALE, WELD SMUT, OXIDE AND GREASE.
9. COVER AND PROTECT ALL NOZZLES AND OPENINGS w/HARDBOARD OR EQUAL FOR SHIPMENT.
10. OVERPRESSURE PROTECTION SHALL BE PROVIDED BY THE CUSTOMER PRIOR TO PLACING VESSEL IN SERVICE.

DRAWING REFERENCE LIST

LIFTING DETAILS----------27200-L

SHIPPING DETAILS----------27200-S

WELD MAP----------27200-W

LADDER, PLATFORM & PINING CLIPS DETAILS----------27200-C

INSULATION SUPPORT DETAILS----------27200-N

LADDER & PLATFORM DETAILS----------BIG C INDUSTRIES DWG (TO FOLLOW)

SPECIAL NOTES

1. FOR 304 TO 304 USE PROCEDURE GM08-F6O OR GT08-F6M OR FC08-F6DS OR SA08-F6 WITH ER308L FILLER.
   FOR 304 TO 316 USE PROCEDURE GM08-F6O OR GT08-F6M OR FC08-F6DS OR SA08-F6 WITH ER316L FILLER.
2. VESSEL WEIGHTS
   VESSEL EMPTY----------149,000 LBS.
   PRE-OPERATING----------154,900 LBS.
   FULL OF WATER----------507,100 LBS.
   OPERATING----------486,900 LBS.
3. ALL FABRICATED GASKET SURFACES TO BE PHONO-SERRATED 44-55 CUTS PER INCH ON FACE WITH APPROXIMATELY 125-250 MICRO-INCH RMS ROUGHNESS.
4. ALL WELDING SHALL BE PROTECTED FROM WIND, RAIN AND OTHER HARMFUL WEATHER CONDITIONS WHICH MAY AFFECT WELD QUALITY.
5. ULTRASONIC TESTING (UT) MAY BE USED IN LIEU OF RT WHEN APPROVED VIA SDDR.
6. PRIOR TO WELDING AREAS OF THE SHELL HEADS AND SKIRT WHERE LIFTING AND TAILING LUGS WILL BE ATTACHED, SHALL BE ULTRASONICALLY EXAMINED OVER 100% OF THE AREA TO BE WELDED AND A MARGIN THAT EXTENDS 5" BEYOND THE WELDS IN ALL DIRECTION.
7. 100% PENETRANT TESTING (PT) IS REQUIRED FOR WELD ATTACHING LIFTING & TAILING LUGS, AND PIPE SUPPORTS TO VESSELS, SHELL, HEADS AND SKIRT.
8. PWI ALL PRESSURE RETAINING MATERIALS & WELDS PER BECHTEL SPEC. 24590-BOF-3PS-MVSC-T0003 EXHIBIT 1 (24590-WTP-3PS-G000-T0002) AND HTTP POA-11-HOP-09-310.
9. RT 10% OF THE LENGTH OF EACH WELDER'S PRODUCTION OF VESSEL MAIN SEAMS BUTT WELDS WITH THE MINIMUM EXTENT BEING ALL "T" JOINTS, AT LEAST 10% OF INTERNAL PIPING BUTT WELDS FOR THE FULL CIRCUMFERENCE, AT LEAST 10% OF THE NOZZLE-TO-SHELL OR HEAD WELDS LOCATED IN THE PRIMARY CONTAINMENT MADE BY EACH WELDER OVER 100% OF ITS CIRCUMFERENCE AND 10% LENGTH OF REMAINING LONG SEAMS PER BECHTEL SPEC. 24590-BOF-3PS-MVSC-T0003 EXHIBIT 6 (24590-WTP-3PS-MV00-T0001) PARAGRAPH 6.4.2.
10. ALL STAINLESS MATERIAL TO HAVE A MAXIMUM CARBON CONTENT OF 0.030%
11. ENSURE ALL INTERNALS & INTERNAL PIPING ARE FREE FROM OBSTRUCTIONS.
12. BRONZE, COPPER, LEAD, ZINC, TIN, ANTIMONY, CADMIUM, THEIR ALLOYS OR MATERIALS CONTAINING SUCH METALS AS THEIR BASIC CONSTITUENTS, OR MOLYBDENUM AND HALOGENS SHALL NOT BE USED IN DIRECT CONTACT WITH S.S.
13. CONTACT MATERIALS INCLUDING MARKING MATERIALS, TEMPERATURE INDICATING CRAYONS, ADHESIVE BACKED AND PRESSURE SENSITIVE TAPE, AND BARRIER AND WRAP MATERIALS MAY BE USED ONLY UNDER THE FOLLOWING LIMITS:
    a. THE TOTAL HALOGEN CONTENT SHALL NOT EXCEED 200 PARTS PER MILLION (PPM).
    b. THE TOTAL SULFUR CONTENT SHALL NOT EXCEED 400 PPM.
    c. NO INTENTIONALLY ADDED LOW MELTING POINT METALS SUCH AS LEAD, ZINC, COPPER, ANTIMONY AND MERCURY.
14. ANY MARKING METAL AND PACKING TAPE USED ON S.S. ARE REQUIRED TO BE MADE FROM LOW CHLORIDE (LESS THAN 200 PPM) AND LOW SULFUR (LESS THAN 400 PPM) TYPE MATERIAL. FABRICATOR SHALL PROVIDE A CHEMICAL ANALYSIS REPORT OF THE MARKER/TAPE FOR EACH LOT OR TYPICAL PRODUCT SAMPLE.
15. CLEANING MATERIALS MAY BE NON-HALOGENATED SOLVENTS OR POTABLE WATER CONTAINING NO MORE THAN 50 PPM CHLORIDE.
16. CONTACT MATERIALS SHALL BE CONTROLLED AND DOCUMENTED IN ACCORDANCE WITH THE SELLER'S INSPECTION AND TEST PLAN AS APPROVED BY THE BUYER.
17. AUSTENITIC S.S. (P-No. 8) WELDING MATERIALS FOR PRESSURE BOUNDARY & LOAD-BEARING WELDS SHALL CONTAIN A MINIMUM DELTA FERRITE CONTENT OF 5% PER (24590-WTP-3PS-MVB2-T0001) PARAGRAPH 6.1.
18. HYDRO WATER TO CONTAIN NO MORE THAN 50 PPM CHLORIDE.
19. ALL PRESSURE RETAINING WELDS TO BE 2 PASS MINIMUM.
20. NOTED UNSIZED WELDS ARE NON-CODE & NON-STRUCTURAL WELDS & ARE MINIMUM SEAL WELDS.
21. JACKET NOT INCLUDED IN DESIGN AND IS NOT PART ASME CODE STAMPED. ABANDONED IN-PLACE COOLING JACKET TO BE UNUSED AND VENTED TO ATMOSPHERE.
22. SEE "PACKAGING, HANDLING & STORAGE REQUIREMENTS" SPEC. 24590-WTP-3PS-G000-T0003 FOR SHIPPING REQUIREMENTS.
23. SEE LIFTING PROCEDURE FOR SHIPPING & LIFTING & TIE DOWN INFORMATION.

Item	Designation	Qty.	Heat No.	Material	Item Description
149	NOZ N11 ELBOW	1		SA-403 304	6" SCH 80 (.423" WALL) B.W. 90 DEG LONG RADIUS ELBOW
150	NOZ N11 EXTENSION	1		SA-312 304 SMLS	6" SCH 80 (.423" WALL) X 82-1/4" LG 1
151					
152					
153	VORTEX BREAKER	3		SA-240 304	3/8" THK
154					
155					
156	NOZ N13 REPAD	1		SA-240 304	5/16" THK X 2" WIDE
157	NOZ N14 REPAD	1		SA-240 304	5/16" THK X 2" WIDE
158					
159					
160					
161					
162	PIPE CAP	2		SA-403 304	6" SCH 80S (.432" WALL) B.W. PIPE CAP
163	MESH	2		SS 304	BIRD SCREEN MESH
164					
165	PIPE CAP (N14)	1		SA-403 304	4" SCH 80 (.337" WALL) B.W. PIPE CAP (SHIP LOOSE)
166	PIPE CAP (N15)	1		SA-403 304	2" SCH 80 (.218" WALL) B.W. PIPE CAP (SHIP LOOSE)
167	PIPE CAP (N16)&(N17)	2		SA-403 304	3" SCH 80 (.300" WALL) B.W. PIPE CAP (SHIP LOOSE)
168					
169					
170	NOZ (N13) BLIND	1		SA-182 304	6" ANSI 150# RF BLIND
171	NOZ (N13) GASKET	1		EPDM	1/8" THK RING GASKET FOR 6" ANSI 150# PIPE FLG
172	NOZ (N13) STUD	8		SA-193-B8M	3/4"-10UNC X 4-1/2" LG
173	NOZ (N13) NUT	16		SA-194-8M	3/4"-10UNC HEAVY HEX
174					
175					
176					
177					
178					
179					
180					
181					
182					
183					
184					
185					
186					
187					
188					
189					
190					
191					
192					
193					
194					
195					
196					
197					
198					
199					
200					
201					
202					
203					
204					

CONNECTION SCHEDULE

Item	Size	Neck Order Length	Material Neck	Material Flg/Cplg	Heat No.	Thickness Neck	Thickness Flg/Cplg	Flg Type	Description	Repad Item	Elevation "Z" Dim
N01	24" OD	35"	SA-240 304	SA-182 304		3/8"	150#	RFWN	MANWAY w/COVER & DAVIT (ITEMS 110-124)	114	432"
N02	2" IPS	18-1/2"	SA-312 304 SMLS	-		SCH 160	-	STUB	EVAPORATOR CONDENSATE INLET	-	407"
N03	3" IPS	18-1/2"	SA-312 304 SMLS	-		SCH 160	-	STUB	SCRUBBER EFFLUENT INLET	-	407"
N04	3" IPS	18-1/2"	SA-312 304 SMLS	-		SCH 160	-	STUB	CONDENSATE INLET	-	407"
N05	4" IPS 1	19-1/4"	SA-312 304 SMLS	-		SCH 40	-	STUB	EDUCTOR INLET	-	7-1/4"
N06	2" IPS	18-1/2"	SA-312 304 SMLS	-		SCH 160	-	STUB	INTAKE AIR	-	407"
N07	10" IPS	21"	SA-312 304 SMLS	SA-182 304		SCH 40	150#	RFWN	SPRAY NOZZLE	143	432"
N07a	3" IPS	40-1/4"	SA-312 304 SMLS	SA-182 304		SCH 80	150#	RFWN	INLET TO SPRAY NOZZLE	-	438"
N08	2" IPS	18-1/2"	SA-312 304 SMLS	-		SCH 160	-	STUB	SUMP EFFLUENT INLET	-	407"
N09	3" IPS	18-1/2"	SA-312 304 SMLS	-		SCH 160	-	STUB	DEP SUMP EFFLUENT INLET	-	407"
N10	8" IPS 1	17-1/2"	SA-312 304 SMLS	-		SCH 40	-	STUB	OVERFLOW	-	357"
N11	6" IPS	4"	SA-312 304 SMLS	-		SCH 80	-	STUB	VESSEL DISCHARGE OUTLET	-	-54"
N12	2" IPS	20-3/4"	SA-312 304 SMLS	SA-182 304		SCH 80	150#	RFWN	VESSEL VENT	-	432"
N13	6" IPS	23-1/2"	SA-312 304 SMLS	SA-182 304		SCH 40	150#	RFWN	INSTRUMENT (RADAR LEVEL BY OTHERS) w/BLIND (ITEMS 170-173)	156	432"
N14	4" IPS	18-1/2"	SA-312 304 SMLS	-		SCH 160	-	CAPPED	SPARE	157	407"
N15	2" IPS	18-1/2"	SA-312 304 SMLS	-		SCH 160	-	CAPPED	SPARE	-	407"
N16	3" IPS	18-1/2"	SA-312 304 SMLS	-		SCH 160	-	CAPPED	SPARE	-	407"
N17	3" IPS	18-1/2"	SA-312 304 SMLS	-		SCH 160	-	CAPPED	SPARE	-	407"
N48	6" IPS	15-3/4"	SA-312 304 SMLS	-		SCH 80	-	CAPPED	NOT USED	-	290-1/2"
N49	6" IPS	-	SA-312 304 SMLS	-		ITEM 30	-	SCREEN	NOT USED	-	29-15/16"

NOTE:
ALL NOZZLES (N01) THROUGH (N17) ARE NEW NOZZLES. NOZZLES (N18-47) NOT USED.

Please note that source, special nuclear, and byproduct materials, as defined in the Atomic Energy Act of 1954 (AEA) are regulated at the U. S. Department of Energy (DOE) facilities exclusively by DOE acting pursuant to its AEA authority. DOE asserts that pursuant to AEA, it has sole and exclusive responsibility and authority to regulate source, special nuclear, and byproduct materials at DOE-owned nuclear facilities. Information contained herein on radionuclides is provided for process description purposes only.

REVISIONS

Rev.	Date	Drawn By	Checked By	Description
1	2/28/18	DKM	JPM	CHANGED ITEM 35 QTY; ADDED ITEM 81; CHANGED LG ITEM 150, NOZ'S (N05) & (N10)

Do Not Scale Drawing

Shop Tolerance

Fractional	± 1/8"
Angular	± 1°
Circumference	± 1/16"
Mach. Surface	± 1/64"

Drawn	DKM
Checked	JPM
Approved	ERG
Quote No.	-
Job No.	27200
P.O. No.	POA-MVSC-00007

HARRIS
Thermal Transfer Products
615 S. Springbrook Rd., Newberg, OR 97132
Phone (503)538-1260 / Fax (503)538-4281

Title:	168" ID OVERHEAD SAMPLING VESSEL
Customer:	BECHTEL NATIONAL INC.
Destination:	RICHLAND, WASHINGTON

Date	Size	Drawing No.	Rev.
1/31/18	D	27200	1

Scale: NA Sheet 1 Of 6

BECHTEL PROJECT: HANFORD TANK WASTE TREATMENT AND IMMOBILIZATION PLANT (WTP PROJECT) 24590-CM-POA-MVSC-00007-02-00001 Rev. 00C
VESSEL: 168" ID OVERHEAD SAMPLING VESSEL TAG#: 24590-BOF-MV-DEP-VSL-00004A

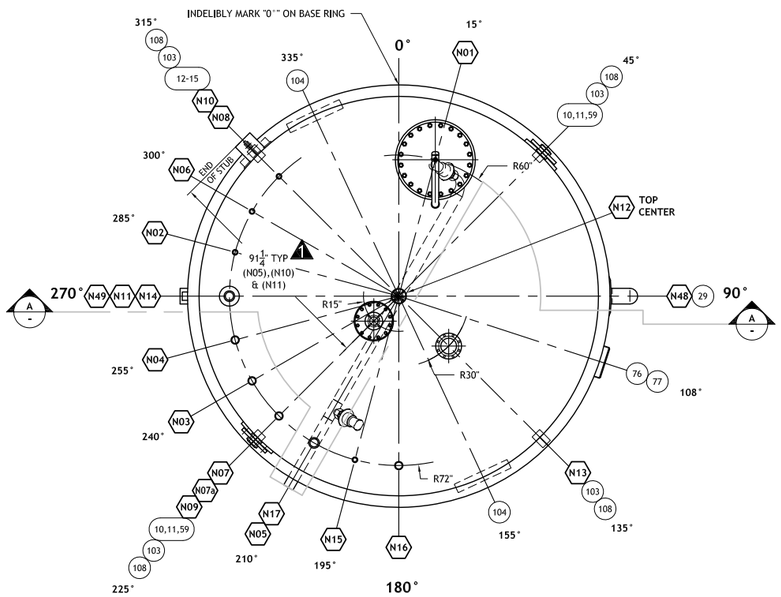

ORIENTATION VIEW

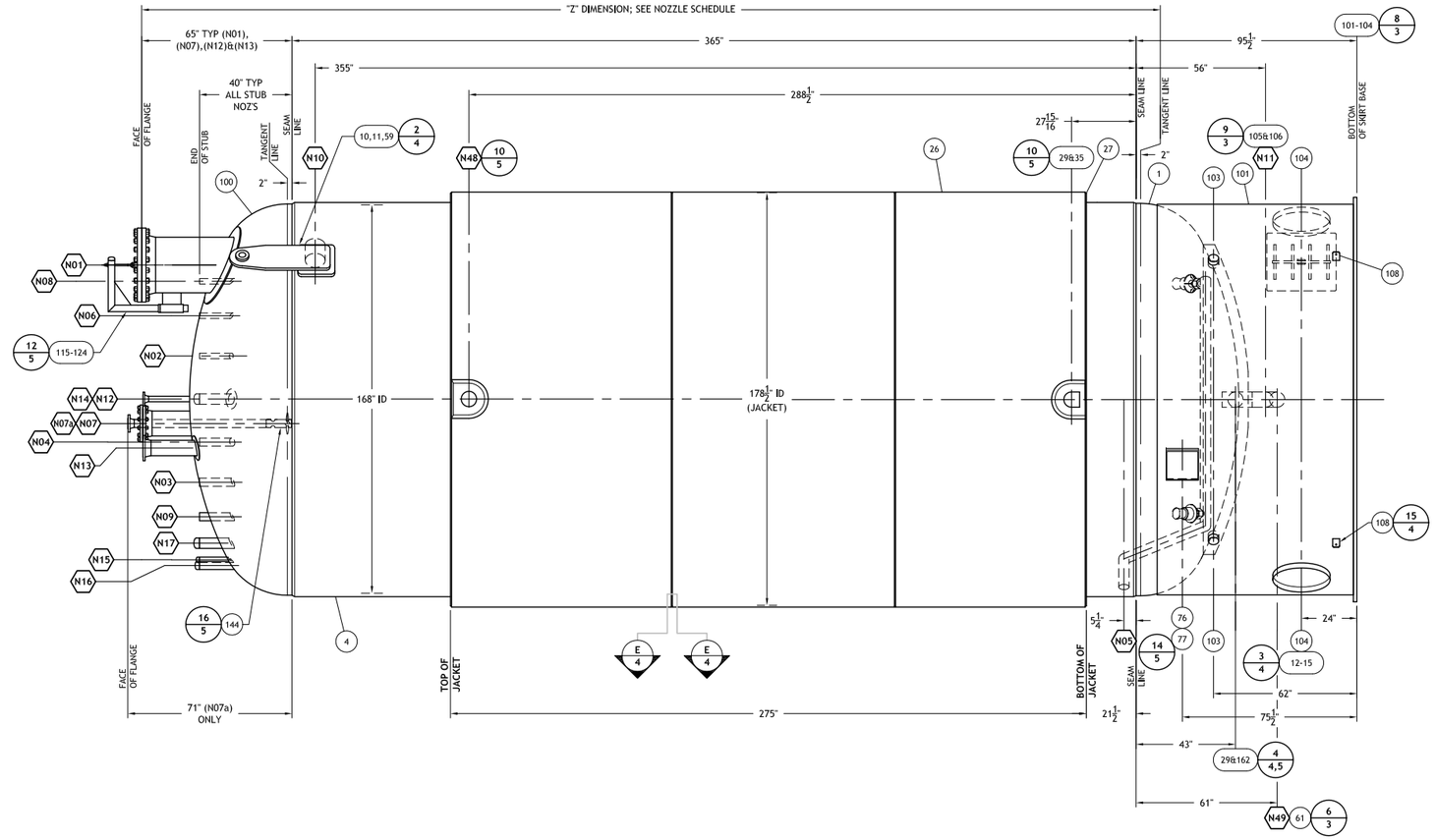

ELEVATION VIEW

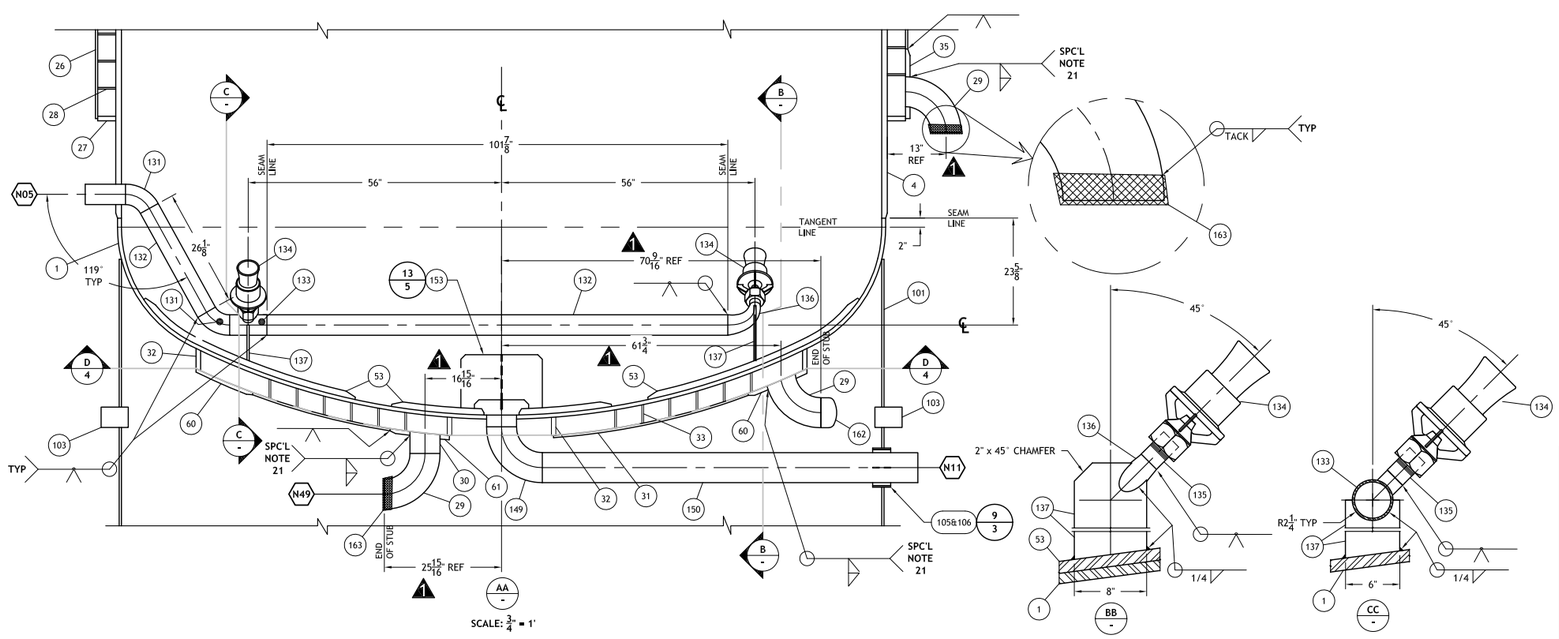

Please note that source, special nuclear, and byproduct materials, as defined in the Atomic Energy Act of 1954 (AEA) are regulated at the U. S. Department of Energy (DOE) facilities exclusively by DOE acting pursuant to its AEA authority. DOE asserts that pursuant to AEA, it has sole and exclusive responsibility and authority to regulate source, special nuclear, and byproduct materials at DOE-owned nuclear facilities. Information contained herein on radionuclides is provided for process description purposes only.

REVISIONS

Rev.	Date	Drawn By	Checked By	Description
1	2/28/18	DKM	JPM	ADDED DIMS

Do Not Scale Drawing	
Shop Tolerance	
Fractional	± 1/8"
Angular	± 1°
Circumference	± 1/16"
Mach. Surface	± 1/64"
Drawn	DKM
Checked	JPM
Approved	EG
Quote No.	-
Job No.	27200
P.O. No.	POA-MVSC-00007

HARRIS Thermal Transfer Products
615 S. Springbrook Rd., Newberg, OR 97132
Phone (503)538-1260 / Fax (503)538-4281

Title: ORIENTATION, ELEVATION & SECTION VIEWS
Customer: BECHTEL NATIONAL INC.
Destination: RICHLAND, WASHINGTON

Date	Size	Drawing No.	Rev.
1/31/18	D	27200	1

Scale: 3/8" = 1' Sheet 2 Of 6

BECHTEL PROJECT: HANFORD TANK WASTE TREATMENT AND IMMOBILIZATION PLANT (WTP PROJECT) 24590-CM-POA-MVSC-00007-02-00001 Rev. 00C
VESSEL: 168" ID OVERHEAD SAMPLING VESSEL TAG#: 24590-BOF-MV-DEP-VSL-00004A

Item	Designation	Qty.	Heat No.	Material	Item Description
1	BOTTOM HEAD	1		SA-240-304	2:1 SEMI-ELLIPT. HD, 168" ID, 2" SF 7/8" MIN THK AFTER FORMING, 1" NOM THK
2					
3					
4	SHELL	1		SA-240-304	1-1/4" THK 168" ID (531-3/4" SO) X 365" LG
5					
6					
7					
8					
9					
10	LIFTING LUG	2		SA-240-304	2" THK
11	LIFTING LUG EYE	4		SA-240-304	1-1/4" THK
12	TAILING LUG REPAD	1		SA-240-304	1/2" THK
13	TAILING LUG	1		SA-240-304	1-1/2" THK
14	TAILING LUG GUSSET	8		SA-240-304	1" THK
15	TAILING LUG EYE	2		SA-240-304	1-1/8" THK
16					
17					
18					
19					
20					
21					
22					
23					
24					
25					
26	JACKET	3		SA-240-304	1/2" THK 178-1/2" ID (562-3/8 SO)
27	JACKET CLOSURE	4		SA-240-304	1" THK 170-1/2" ID X 178-1/2" OD
28	JACKET HELICAL BAF	1		SA-240-304	1/4" THK X 4" FB
29	ELBOW	4		SA-403-304	6" SCH 80 (.432") L.R. B.W. 90 DEG ELBOW
30	JACKET PIPING	A/R		SA-312 304 SMLS	6" SCH 80 (.432")
31	BOTTOM HEAD JACKET	1		SA-240-304	1/2" THK 2:1 SE HEAD CAP, 110" OD, 86" MAJOR IR, 43" MINOR IR
32	BOTTOM HEAD JACKET CLOSURE	2		SA-240-304	1" THK
33	BOTTOM HEAD JACKET HELICAL BAF	1		SA-240-304	1/4" THK
34					
35	JACKET INTERCONNECT INSERT PLATE	1		SA-240-316	1" THK
36					
37					
38					
39					
40					
41					
42					
43					
44					
45					
46					
47					
48					
49					
50					
51					
52					
53	WEAR PLATE	6		SA-240-304	1-1/4" THK.
54					
55					
56					
57					
58					
59	LIFT LUG REPAD	2		SA-240-304	1-1/4" THK.
60	BOTTOM HEAD JACKET TRANSITION	1		SA-240-304	1" THK 2:1 SE HEAD CAP, 135" OD X 110" ID, 86" MAJOR IR, 43" MINOR IR
61	N49 INSERT	1		SA-240-304	3/4" THK.
62					
63					
64					
65					
66					
67					
68					
69					
70					
71					
72	NOZZLE N48 INSERT	1		SA-240-304	1" THK
73					
74					
75					
76	NAMEPLATE	1		SA-240-304	1/4" THK
77	NAMEPLATE BRACKET	1		SA-240-304	1/4" THK
78					
79					
80					
81	HEX PLUG	2		SA-182 316	1/4" NPT HEX PLUG
82	LIFTING LUG REINFORCEMENT PLATE	2		SA-240-304	1" THK
83					
84					
85					
86					
87					
88					
89					
90					
91					
92					
93					
94					
95					
96					
97					

NOTE:
ALL BILL OF MATERIAL ITEMS #100 AND HIGHER ARE NEW ITEMS

SEE DETAIL 14 SHEET 5 FOR NAMEPLATE AND STAMPING.

Item	Designation	Qty.	Heat No.	Material	Item Description
98					
99					
100	TOP HEAD	1		SA-240-304	2:1 SEMI-ELLIPT. HD, 168" ID, 2" SF, 17/32" MIN THK AFTER FORMING, 5/8" NOM THK
101	SKIRT	1		SA-240-304	3/4" THK 168" ID (530-3/16" SO) X APPROX. 84-15/16" LG
102	SKIRT BASE RING	1		SA-240-304	1-1/2" THK X 172-1/2" OD X 164-1/2" ID
103	SKIRT VENT	4		SA-312-304	4" SCH 40 (.237") PIPE X 6-1/2" LG
104	SKIRT ACCESS LIP	2		SA-240-304	3/8" THK X 24" ID (76-9/16" SO) X 4" LG
105	NOZ N11 PIPE SLEEVE	1		SA-312 304	8" SCH 80 (.500" WALL) X 4" LG
106	NOZ N11 SLEEVE GUIDE BAR	4		SA-240 304	1/4" THK X 3/8" X 4"
107					
108	GROUNDING LUG	4		SA-240 304	1/4" THK X 3" X 5"
109					
110	NOZ N01 BLIND	1		SA-182 304	24" ANSI 150# RF BLIND
111	NOZ N01 GASKET	1		EPDM	1/8" THK RING GASKET FOR 24" ANSI 150# PIPE FLANGE
112	NOZ N01 STUD	20		SA-193-B8M	1-1/4"-8NC X 7-1/4" LG
113	NOZ N01 NUT	40		SA-194-8M	1-1/4"-8NC HEAVY HEX
114	NOZ N01 REPAD	1		SA-240 304	5/8" THK X 5" WIDE
115	NOZ N01 DAVIT MAST	1		SA-312 304	2-1/2" SCH 40 (.203" WALL) X 37-3/8" LG, MITER ONE END @ 45 DEG
116	NOZ N01 DAVIT ARM	1		SA-312 304	2-1/2" SCH 40 (.203" WALL) X 22-3/16" LG, MITER ONE END @ 45 DEG
117	NOZ N01 DAVIT CAP	1		SA-403 304	2-1/2" SCH 40 (.203" WALL) B.W. PIPE CAP
118	NOZ N01 DAVIT GUSSET	1		SA-240 304	1/2" THK X 7" X 7"
119	NOZ N01 DAVIT SOCKET	1		SA-312 304	3" SCH 40 (.216" WALL) X 10" LG
120	NOZ N01 DAVIT COLLAR	1		SA-312 304	3" SCH 40 (.216" WALL) X 3/4" LG
121	NOZ N01 DAVIT ATTACHMENT PL	1		SA-240 304	3/4" THK X 8" X 5"
122	NOZ N01 DAVIT GREASE FITTING	1		SS 304	1/8" MALE NPT GREASE ZIRC
123	NOZ N01 DAVIT COVER LOOP	1		SA-479 304	1/2" OD ROUND BAR
124	NOZ N01 DAVIT EYEBOLT	1		SS 304	3/4" OD EYEBOLT w/10" LG SHANK, NUT & WASHER
125	DAVIT SHACKLE	1		SS 304	5/8" SHACKLE
126					
127					
128					
129					
130					
131	NOZ N05 ELBOW	2		SA-403 304	4" SCH 40 (.237") B.W. 90 DEG LONG RADIUS ELBOW, CUT TO REQ'D ANGLE
132	NOZ N05 INTERNAL PIPE	2		SA-312 304 SMLS	4" SCH 40 (.237" WALL) X (1) @ 26-1/8" & (1) @ 101-7/8" LG
133	INTERNAL REDUCING TEE	1		SA-403 304	4" SCH 40 (.237" WALL) X 2" SCH 40 (.154" WALL) OUTLET REDUCING B.W. TEE
134	EDUCTOR	2		SS316	2" FEMALE JACOBY-TARBOX TLA BODY EDUCTOR, MODEL TB-3925-T11FNPT
135	NIPPLE	2		SA-312 304	2" SCH 40 (.154" WALL) X 3" LG, THREAD ONE END
136	INTERNAL ELBOW	1		SA-403 304	4" SCH 40 (.237" WALL) X 2" SCH 40 (.154" WALL) 90 DEG LONG RADIUS REDUCING B.W. ELBOW
137	EDUCTOR PIPE SUPPORT	2		SA-240 304	1/2" THK
138					
139	NOZ N07 BLIND	1		SA-182 304	10" ANSI 150# RF BLIND
140	NOZ N07 GASKET	1		EPDM	1/8" THK RING GASKET FOR 10" ANSI 150# PIPE FLANGE
141	NOZ N07 STUD	12		SA-193-B8M	7/8"-9UNC X 5" LG
142	NOZ N07 NUT	24		SA-194-8M	7/8"-9UNC HEAVY HEX
143	NOZ N07 REPAD	1		SA-240 304	5/16" THK X 3" WIDE
144	INTERNAL SPRAY JET	1		SS316	
145					
146					
147					
148					

NOTES

1. ALL FLANGE BOLT HOLES TO STRADDLE MAJOR VESSEL CENTERLINES.
2. EACH SECTION OF NOZZLE REPADS AND ALL REPADS CROSSING A WELD SEAM REQUIRE AN 1/8" NPT WEEP HOLE w/PLUG.
3. CONDUCT 15psi AIR TEST FOR ALL NOZZLE REPADS AND ALL REPADS CROSSING A WELD SEAM.
4. ALL WELDS TO BE CONTINUOUS UNLESS OTHERWISE SPECIFIED.
5. CLEAN HEAT TINT AREA WITH FLAPPER WHEEL.
6. ALL WELDS TO BE CLEANED INSIDE AND OUTSIDE WITH SS POWER WIRE BRUSH.
7. APPLY "NEVER-SEEZ" OR EQUAL TO ALL EXTERNAL FLANGE FASTENERS & DAVIT EYEBOLTS.
8. IMMEDIATELY PRIOR TO SHIPMENT CLEAN ALL INNER SURFACES OF DIRT, PAINT, SCALE, WELD SMUT, OXIDE AND GREASE.
9. COVER AND PROTECT ALL NOZZLES AND OPENINGS w/HARDBOARD OR EQUAL FOR SHIPMENT.
10. OVERPRESSURE PROTECTION SHALL BE PROVIDED BY THE CUSTOMER PRIOR TO PLACING VESSEL IN SERVICE.

DRAWING REFERENCE LIST

LIFTING DETAILS----------27201-L

SHIPPING DETAILS----------27201-S

WELD MAP----------27201-W

LADDER, PLATFORM & PINING CLIPS DETAILS----------27201-C

INSULATION SUPPORT DETAILS----------27201-N

LADDER & PLATFORM DETAILS----------BIG C INDUSTRIES DWG (TO FOLLOW)

DESIGN DATA

Code	ASME SECTION VIII, DIVISION 1, 2001, 2003 ADDENDA
Design Conditions	Shellside
Design Pressure	15 PSIG & FV
Design Temperature	155 °F
MDMT	-23 °F
Hydrotest	20 PSIG
Corrosion Allowance	0.04"
Other NDE	SEE SPECIAL NOTES 5-8
Radiography	SPOT (UW11(b)); SEE SPECIAL NOTE 9
Insulation:	3" THK, BY OTHERS
Gasket Material:	1/8" THK EPDM
Fasteners:	SA193 B8M STUDS & SA194 8M NUTS

SPECIAL NOTES

1. FOR 304 TO 304 USE PROCEDURE GM08-F6O OR GT08-F6M OR FC08-F6DS OR SA08-F6 WITH ER308L FILLER.
   FOR 304 TO 316 USE PROCEDURE GM08-F6O OR GT08-F6M OR FC08-F6DS OR SA08-F6 WITH ER316L FILLER.
2. VESSEL WEIGHTS
   VESSEL EMPTY----------149,000 LBS.
   PRE-OPERATING----------154,900 LBS.
   FULL OF WATER----------507,100 LBS.
   OPERATING----------486,900 LBS.
3. ALL FABRICATED GASKET SURFACES TO BE PHONO-SERRATED 44-55 CUTS PER INCH ON FACE WITH APPROXIMATELY 125-250 MICRO-INCH RMS ROUGHNESS.
4. ALL WELDING SHALL BE PROTECTED FROM WIND, RAIN AND OTHER HARMFUL WEATHER CONDITIONS WHICH MAY AFFECT WELD QUALITY.
5. ULTRASONIC TESTING (UT) MAY BE USED IN LIEU OF RT WHEN APPROVED VIA SDDR.
6. PRIOR TO WELDING AREAS OF THE SHELL HEADS AND SKIRT WHERE LIFTING AND TAILING LUGS WILL BE ATTACHED, SHALL BE ULTRASONICALLY EXAMINED OVER 100% OF THE AREA TO BE WELDED AND A MARGIN THAT EXTENDS 5" BEYOND THE WELDS IN ALL DIRECTION.
7. 100% PENETRANT TESTING (PT) IS REQUIRED FOR WELD ATTACHING LIFTING & TAILING LUGS, AND PIPE SUPPORTS TO VESSELS, SHELL, HEADS AND SKIRT.
8. PWI ALL PRESSURE RETAINING MATERIALS & WELDS PER BECHTEL SPEC. 24590-BOF-3PS-MVSC-T0003 EXHIBIT 1 (24590-WTP-3PS-G000-T0002) AND HTTP POA-11-HOP-09-310.
9. RT 10% OF THE LENGTH OF EACH WELDER'S PRODUCTION OF VESSEL MAIN SEAMS BUTT WELDS WITH THE MINIMUM EXTENT BEING ALL "T" JOINTS, AT LEAST 10% OF INTERNAL PIPING BUTT WELDS FOR THE FULL CIRCUMFERENCE, AT LEAST 10% OF THE NOZZLE-TO-SHELL OR HEAD WELDS LOCATED IN THE PRIMARY CONTAINMENT MADE BY EACH WELDER OVER 100% OF ITS CIRCUMFERENCE AND 10% LENGTH OF REMAINING LONG SEAMS PER BECHTEL SPEC. 24590-BOF-3PS-MVSC-T0003 EXHIBIT 6 (24590-WTP-3PS-MV00-T0001) PARAGRAPH 6.4.2.
10. ALL STAINLESS MATERIAL TO HAVE A MAXIMUM CARBON CONTENT OF 0.030%
11. ENSURE ALL INTERNALS & INTERNAL PIPING ARE FREE FROM OBSTRUCTIONS.
12. BRONZE, COPPER, LEAD, ZINC, TIN, ANTIMONY, CADMIUM, THEIR ALLOYS OR MATERIALS CONTAINING SUCH METALS AS THEIR BASIC CONSTITUENTS, OR MOLYBDENUM AND HALOGENS SHALL NOT BE USED IN DIRECT CONTACT WITH S.S.
13. CONTACT MATERIALS INCLUDING MARKING MATERIALS, TEMPERATURE INDICATING CRAYONS, ADHESIVE BACKED AND PRESSURE SENSITIVE TAPE, AND BARRIER AND WRAP MATERIALS MAY BE USED ONLY UNDER THE FOLLOWING LIMITS:
    a. THE TOTAL HALOGEN CONTENT SHALL NOT EXCEED 200 PARTS PER MILLION (PPM).
    b. THE TOTAL SULFUR CONTENT SHALL NOT EXCEED 400 PPM.
    c. NO INTENTIONALLY ADDED LOW MELTING POINT METALS SUCH AS LEAD, ZINC, COPPER, ANTIMONY AND MERCURY.
14. ANY MARKING METAL AND PACKING TAPE USED ON S.S. ARE REQUIRED TO BE MADE FROM LOW CHLORIDE (LESS THAN 200 PPM) AND LOW SULFUR (LESS THAN 400 PPM) TYPE MATERIAL. FABRICATOR SHALL PROVIDE A CHEMICAL ANALYSIS REPORT OF THE MARKER/TAPE FOR EACH LOT OR TYPICAL PRODUCT SAMPLE.
15. CLEANING MATERIALS MAY BE NON-HALOGENATED SOLVENTS OR POTABLE WATER CONTAINING NO MORE THAN 50 PPM CHLORIDE.
16. CONTACT MATERIALS SHALL BE CONTROLLED AND DOCUMENTED IN ACCORDANCE WITH THE SELLER'S INSPECTION AND TEST PLAN AS APPROVED BY THE BUYER.
17. AUSTENITIC S.S. (P-No. 8) WELDING MATERIALS FOR PRESSURE BOUNDARY & LOAD-BEARING WELDS SHALL CONTAIN A MINIMUM DELTA FERRITE CONTENT OF 5% PER (24590-WTP-3PS-MVB2-T0001) PARAGRAPH 6.1.
18. HYDRO WATER TO CONTAIN NO MORE THAN 50 PPM CHLORIDE.
19. ALL PRESSURE RETAINING WELDS TO BE 2 PASS MINIMUM.
20. NOTED UNSIZED WELDS ARE NON-CODE & NON-STRUCTURAL WELDS & ARE MINIMUM SEAL WELDS.
21. JACKET NOT INCLUDED IN DESIGN AND IS NOT PART ASME CODE STAMPED. ABANDONED IN-PLACE COOLING JACKET TO BE UNUSED AND VENTED TO ATMOSPHERE.
22. SEE "PACKAGING, HANDLING & STORAGE REQUIREMENTS" SPEC. 24590-WTP-3PS-G000-T0003 FOR SHIPPING REQUIREMENTS.
23. SEE LIFTING PROCEDURE FOR SHIPPING & LIFTING & TIE DOWN INFORMATION.

Item	Designation	Qty.	Heat No.	Material	Item Description
149	NOZ N11 ELBOW	1		SA-403 304	6" SCH 80 (.423" WALL) B.W. 90 DEG LONG RADIUS ELBOW
150	NOZ N11 EXTENSION	1		SA-312 304 SMLS	6" SCH 80 (.423" WALL) X 82-1/4" LG 1
151					
152					
153	VORTEX BREAKER	3		SA-240 304	3/8" THK
154					
155	NOZ N12 REPAD	1		SA-240 304	5/16" THK X 2" WIDE
156	NOZ N13 REPAD	1		SA-240 304	5/16" THK X 2" WIDE
157	NOZ N14 REPAD	1		SA-240 304	5/16" THK X 2" WIDE
158					
159					
160					
161					
162	PIPE CAP	2		SA-403 304	6" SCH 80S (.432" WALL) B.W. PIPE CAP
163	MESH	2		SS 304	BIRD SCREEN MESH
164					
165	PIPE CAP (N14)	1		SA-403 304	4" SCH 80 (.337" WALL) B.W. PIPE CAP (SHIP LOOSE)
166	PIPE CAP (N15)	1		SA-403 304	2" SCH 80 (.218" WALL) B.W. PIPE CAP (SHIP LOOSE)
167	PIPE CAP (N16)&(N17)	2		SA-403 304	3" SCH 80 (.300" WALL) B.W. PIPE CAP (SHIP LOOSE)
168					
169					
170	NOZ (N13) BLIND	1		SA-182 304	6" ANSI 150# RF BLIND
171	NOZ (N13) GASKET	1		EPDM	1/8" THK RING GASKET FOR 6" ANSI 150# PIPE FLG
172	NOZ (N13) STUD	8		SA-193-B8M	3/4"-10UNC X 4-1/2" LG
173	NOZ (N13) NUT	16		SA-194-8M	3/4"-10UNC HEAVY HEX
174					
175					
176					
177					
178					
179					
180					
181					
182					
183					
184					
185					
186					
187					
188					
189					
190					
191					
192					
193					
194					
195					
196					
197					
198					
199					
200					
201					
202					
203					
204					

CONNECTION SCHEDULE

Item	Size	Neck Order Length	Material Neck	Material Flg/Cplg	Heat No.	Thickness Neck	Thickness Flg/Cplg	Flg Type	Description	Repad Item	Elevation "Z" Dim
N01	24" OD	35"	SA-240 304	SA-182 304		3/8"	150#	RFWN	MANWAY w/COVER & DAVIT (ITEMS 110-124)	114	432"
N02	2" IPS	18-1/2"	SA-312 304 SMLS	-		SCH 160	-	STUB	EVAPORATOR CONDENSATE INLET	-	407"
N03	3" IPS	18-1/2"	SA-312 304 SMLS	-		SCH 160	-	STUB	SCRUBBER EFFLUENT INLET	-	407"
N04	3" IPS	18-1/2"	SA-312 304 SMLS	-		SCH 160	-	STUB	CONDENSATE INLET	-	407"
N05	4" IPS 1	19-1/4"	SA-312 304 SMLS	-		SCH 40	-	STUB	EDUCTOR INLET	-	7-1/4"
N06	3" IPS	18-1/2"	SA-312 304 SMLS	-		SCH 160	-	STUB	INTAKE AIR	-	407"
N07	10" IPS	21"	SA-312 304 SMLS	SA-182 304		SCH 40	150#	RFWN	SPRAY NOZZLE	143	432"
N07a	3" IPS	40-1/4"	SA-312 304 SMLS	SA-182 304		SCH 80	150#	RFWN	INLET TO SPRAY NOZZLE	-	438"
N08	2" IPS	18-1/2"	SA-312 304 SMLS	-		SCH 160	-	STUB	SUMP EFFLUENT INLET	-	407"
N09	3" IPS	18-1/2"	SA-312 304 SMLS	-		SCH 160	-	STUB	DEP SUMP EFFLUENT INLET	-	407"
N10	8" IPS 1	7-1/2"	SA-312 304 SMLS	-		SCH 40	-	STUB	OVERFLOW	-	357"
N11	6" IPS	4"	SA-312 304 SMLS	-		SCH 80	-	STUB	VESSEL DISCHARGE OUTLET	-	-54"
N12	3" IPS	20-3/4"	SA-312 304 SMLS	SA-182 304		SCH 80	150#	RFWN	VESSEL VENT	155	432"
N13	6" IPS	23-1/2"	SA-312 304 SMLS	SA-182 304		SCH 40	150#	RFWN	INSTRUMENT (RADAR LEVEL BY OTHERS) w/BLIND (ITEMS 170-173)	156	432"
N14	4" IPS	18-1/2"	SA-312 304 SMLS	-		SCH 160	-	CAPPED	SPARE	157	407"
N15	2" IPS	18-1/2"	SA-312 304 SMLS	-		SCH 160	-	CAPPED	SPARE	-	407"
N16	3" IPS	18-1/2"	SA-312 304 SMLS	-		SCH 160	-	CAPPED	SPARE	-	407"
N17	3" IPS	18-1/2"	SA-312 304 SMLS	-		SCH 160	-	CAPPED	SPARE	-	407"
N48	6" IPS	15-3/4"	SA-312 304 SMLS	-		SCH 80	-	CAPPED	NOT USED	-	290-1/2"
N49	6" IPS	-	SA-312 304 SMLS	-		ITEM 30	-	SCREEN	NOT USED	-	29-15/16"

NOTE:
ALL NOZZLES (N01) THROUGH (N17) ARE NEW NOZZLES. NOZZLES (N18-47) NOT USED.

Please note that source, special nuclear, and byproduct materials, as defined in the Atomic Energy Act of 1954 (AEA) are regulated at the U. S. Department of Energy (DOE) facilities exclusively by DOE acting pursuant to its AEA authority. DOE asserts that pursuant to AEA, it has sole and exclusive responsibility and authority to regulate source, special nuclear, and byproduct materials at DOE-owned nuclear facilities. Information contained herein on radionuclides is provided for process description purposes only.

REVISIONS

Rev.	Date	Drawn By	Checked By	Description
1	2/28/18	DKM	JPM	CHANGED LG ITEM 150, NOZ'S (N05) & (N10)

Do Not Scale Drawing

Shop Tolerance
Fractional - ±1/8"
Angular - 1°
Circumference - ±1/16"
Mach. Surface - ±1/64"

Drawn	DKM
Checked	JPM
Approved	ERG
Quote No.	-
Job No.	27201
P.O. No.	POA-MVSC-00007

HARRIS Thermal Transfer Products
615 S. Springbrook Rd., Newberg, OR 97132
Phone (503)538-1260 / Fax (503)538-4281

Title: 168" ID OVERHEAD SAMPLING VESSEL
Customer: BECHTEL NATIONAL INC.
Destination: RICHLAND, WASHINGTON

Date	Size	Drawing No.	Rev.
1/31/18	D	27201	1

Scale: NA Sheet 1 Of 6

BECHTEL PROJECT: HANFORD TANK WASTE TREATMENT AND IMMOBILIZATION PLANT (WTP PROJECT) 24590-CM-POA-MVSC-00007-02-00003 Rev. 00B
VESSEL: 168" ID OVERHEAD SAMPLING VESSEL TAG#: 24590-BOF-MV-DEP-VSL-00004B

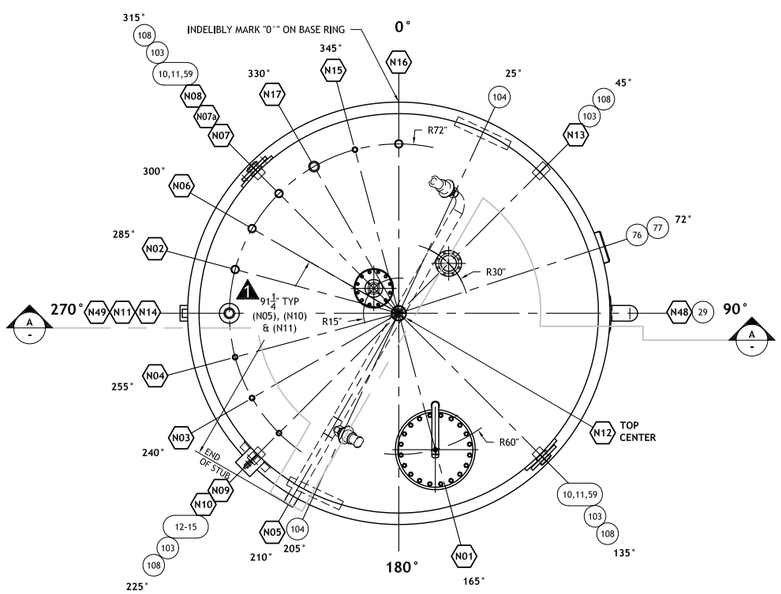

ORIENTATION VIEW

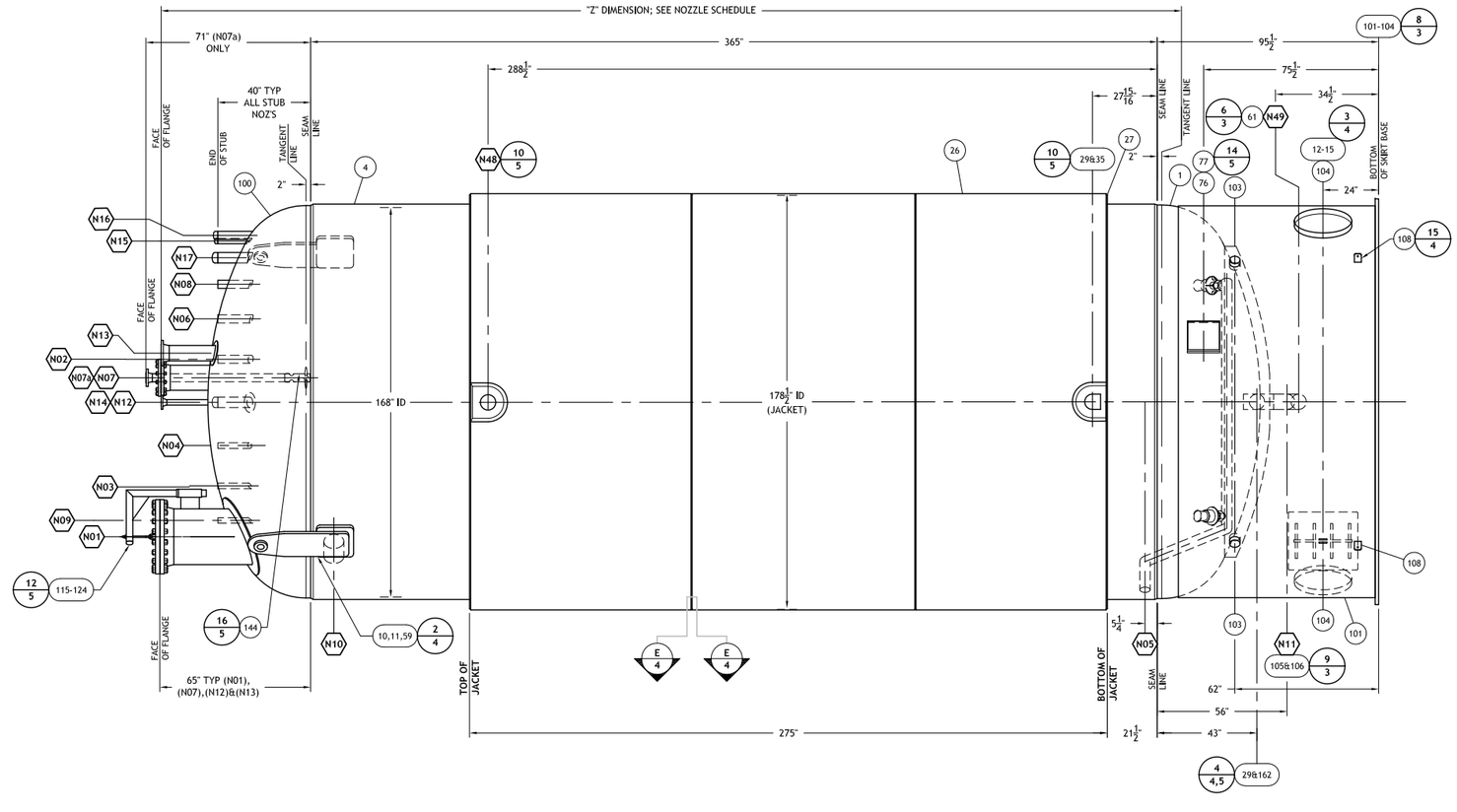

ELEVATION VIEW

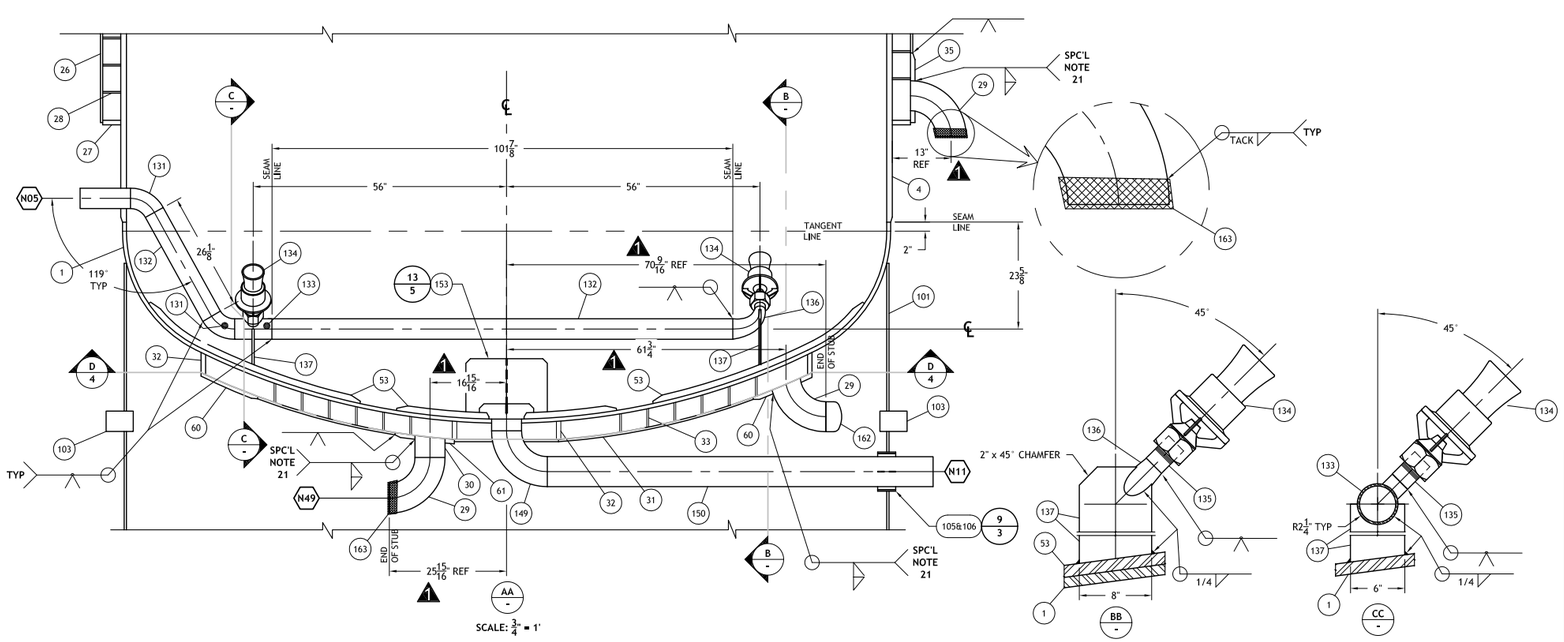

Please note that source, special nuclear, and byproduct materials, as defined in the Atomic Energy Act of 1954 (AEA) are regulated at the U. S. Department of Energy (DOE) facilities exclusively by DOE acting pursuant to its AEA authority. DOE asserts that pursuant to AEA, it has sole and exclusive responsibility and authority to regulate source, special nuclear, and byproduct materials at DOE-owned nuclear facilities. Information contained herein on radionuclides is provided for process description purposes only.

REVISIONS				
Rev.	Date	Drawn By	Checked By	Description
1	2/28/18	DKM	JPM	ADDED DIMS

Do Not Scale Drawing

Shop Tolerance	
Fractional	± 1/8"
Angular	± 1°
Circumference	± 1/16"
Mach. Surface	± 1/64"

Drawn	DKM
Checked	JPM
Approved	EG
Quote No.	-
Job No.	27201
P.O. No.	POA-MVSC-00007

HARRIS Thermal Transfer Products
615 S. Springbrook Rd., Newberg, OR 97132
Phone (503)538-1260 / Fax (503)538-4281

Title: ORIENTATION, ELEVATION & SECTION VIEWS
Customer: BECHTEL NATIONAL INC.
Destination: RICHLAND, WASHINGTON

Date	Size	Drawing No.	Rev.
1/31/18	D	27201	1

Scale: 3/8" = 1' Sheet 2 Of 6

BECHTEL PROJECT: HANFORD TANK WASTE TREATMENT AND IMMOBILIZATION PLANT (WTP PROJECT) 24590-CM-POA-MVSC-00007-02-00003 Rev. 00B
VESSEL: 168" ID OVERHEAD SAMPLING VESSEL TAG#: 24590-BOF-MV-DEP-VSL-00004B

Item	Designation	Qty.	Heat No.	Material	Item Description
1	HEAD	2		SA-240-316	F&D HEAD, 300" ID, 100% CR, 6% KR, 1-1/2" SF, 1" MIN THK (FOR TOP HEAD ONLY), 1.124" MIN THK SPHERICAL
					AND, 1" MIN THK KNUCKLE (FOR BOTTOM HEAD ONLY), ALL WELDING BY HARRIS THERMAL
2	SHELL	1		SA-240-316	1" THK, 300"(945 5/8") ID
3	SKIRT	1		SA-240-304	1" THK, 300"(945 5/8") ID
4	SKIRT ACCESS LIP	2		SA-240-316	7/16" THK
5	SKIRT VENT	4		SA-312-304	4", SCH 40S (0.237") PIPE
6	SKIRT ATTACHMENT	1		SA-240-304	1-1/2" X 6" BAR
7					
8					
9					
10	WASH RING	4		SA-312 316 SMLS	2", SCH 40S (0.154") PIPE
11	WASH RING END COVER	8		SA-240-316	7/16" THK
12	WASH RING SUPPORT	12		SA-240-316	3/8" THK X 2" WIDE
13	LIFTING LUG	2		SA-240-304	2" THK
14	LIFTING LUG EYE	4		SA-240-316	1-1/4" THK
15	LIFTING LUG REPAD	2		SA-240-316	1-1/2" THK
16					
17	THERMOWELL	1		SA-479-316	Ø2" ROUND BAR (MACHINED PER DETAIL)
18	TWELL PIPE	1		SA-312 316 SMLS	1", SCH 160S (0.250") PIPE
19	WEAR PLATE_CENTER	1		SA-240-316	1" THK, 50" OD
20	WEAR PLATE_OUTER	7		SA-240-316	1" THK, 52" OD
21	N06, N08, N09 HEAD	3		SA-240-316	3/4" THK, 6 5/8" OD
22	N06BC, N08BC, N09BC BOTTOM REDUCER	6		SA-403-316	2" X 1" SCH 160S (0.344") CONCENTRIC REDUCER
23	N06BC, N08BC, N09BC BOTTOM PIPE	6		SA-312-316	2" SCH 160S (0.344") PIPE
24	INTERNAL PIPE SLEEVE	A/R		SA-479-316	Ø3-1/2" ROUND BAR X 5" LG, BORED TO 2-1/2" I.D.
25	INTERNAL PIPE SUPPORT	A/R		SA-479-316	4" WIDE X 1/2" THK FLAT BAR
26	BOTTOM PIPE SUPPORT	A/R		SA-479-316	4" WIDE X 3/4" THK FLAT BAR
27	SPARGER AIR NOZZLE REDUCER	36		SA-403-316	2" SCH 160S X 3/4" (0.344") CONC REDUCER
28	NOZZLE N04 CAP	1		SA-403-316	4", SCH 80S (0.337") CAP
29	NOZZLE N25 CAP	1		SA-403-316	2", SCH 80S (0.218") CAP
30					
31	JACKET	2		SA-240-316	1/2" THK, 310"(975-1/2") ID
32	JACKET CLOSURE	5		SA-240-316	1" THK
33	JACKET HELICAL BAFFLE	2		SA-240-316	1/4" THK
34	JACKET INTERCONNECT	7		SA-312 316 SMLS	4" SCH 80S (0.337") PIPE
35	BOTTOM JACKET	1		SA-240-316	SPHERICALLY DISHED COVER, 1/2" THK, 257" OD, 305" CR
36	BOTTOM JACKET CLOSURE	2		SA-240-316	1-1/4" THK
37	BOTTOM JACKET CONCENTRIC BAFFLE	1		SA-240-316	1/4" THK
38	BOTTOM JACKET WELD ELBOW	1		SA-403 316	4", SCH 80S (0.337") 45° SHORT RADIUS ELBOW
39	CENTER PULSE JET MIXER	1		316	HTTP SERIAL NUMBER 23245-2, SEE 23245-2-D1 FOR DETAILS/B.O.M.
40	OUTER PULSE JET MIXER	7		316	HTTP SERIAL NUMBERS 23245-3 THRU -9, SEE 23245-2-D2 FOR DETAILS/B.O.M.
41	PJM CLUSTER HEAD	1		SA-240-316	ASME CODE FLANGED & DISHED HEAD, 132" ID, 1/2" NOM THK, 1-1/2" S.F.
42	PJM CLUSTER SHELL	14		SA-240-316	3/8" THK
43	PJM CLUSTER BOTTOM PLATE	1		SA-240-316	1/2" THK, 133" DIA
44					
45	NOZZLE CLUSTER SUPPORT	A/R		SA-479-316	2" WIDE X 1/2" THK FLAT BAR
46	NOZZLE CLUSTER LARGE SUPPORT	A/R		SA-240-316	1/2" THK X 8" WIDE
47	PJM CLUSTER VERTICAL PIPE CAP	7		SA-403-316	10" SCH 80S (0.500") CAP
48					
49					
50	NOZZLE N35 SLEEVE	1		SA-312-304	6" SCH 40S (0.280") X 4" LG PIPE
51	HEX PLUG	2		SA-403-316	1/4" NPT
52	SIDE-BOTTOM JACKET INTERCONNECT PIPE SLEEVE	1		SA-312-304	6" SCH 40S (0.280") X 4" LG PIPE
53	NAMEPLATE	1		SA-240-304	1/4" THK
54	NAMEPLATE BRACKET	1		SA-240-316	1/4" THK
55					
56	NOZZLE CLUSTER SLEEVE	AR		SA-479-316	1/2" X 4" FB
57					
58	NOZZLE N32 BOTTOM SUPPORT	2		SA-479-316	1/2" X 4" FB
59					
60					
61					
62	BOTTOM JACKET INNER SUPPORT	2		SA-240-316	1" THK
63	NOZZLE N36 INSERT PLATE	1		SA-240-316	1-1/2" THK
64					
65					
66	JACKET INTERCONNECT ELBOW	4		SA-403-316	4", SCH 80S(.337") 90° SHORT RAD ELBOW
67	NOZZLE N07, N06A, N08C& N09C SUPPORT SLEEVE	10		SA-312 316 SMLS	2" SCH 160S (0.344") X 5"
68					
69					
70	PJM CLUSTER SUPPORT STRUCTURE VERTICAL PIPE	7		SA-312 316 SMLS	10" SCH 80S (0.500") PIPE
71					
72					
73	HEAD JACKET CONE A	1		SA-240-316	CONE 1" THK X 257" ID X 274" OD X 64° ANGLE
74	HEAD JACKET CONE B	1		SA-240-316	CONE 1" THK X 274" ID X 276" OD X 30° ANGLE
75	BOTTOM HEAD JACKET INTEGRAL PAD	1		SA-240-316	1-1/2" THK
76					
77					
78					
79	PJM UPPER SUPPORT	7		SA-240-316	3/4" THK X 6-3/4" X 16" OD (47-15/16" S.O.)
80	PJM UPPER SUPPORT PIPE	7		SA-312 316 SMLS	16" SCH 80S (0.500") X (6) @ 59° LG & (1) @ 15° LG
81	PJM UPPER SUPPORT REPAD (TO PJM)	7		SA-240-316	3/4" THK X 36" OD (TRIMMED @ TOP & BOTTOM)
82	PJM UPPER SUPPORT INSERT	7		SA-240-316	1-1/2" X 32" OD
83	PJM MID & LOWER SUPPORT PIPE	14		SA-312 316 SMLS	10" SCH 80 (.593" WALL) X 48" LG
84	PJM MID & LOWER SUPPORT PIPE REDUCER	14		SA-403-316	16" X 10" SCH 80S (0.500") CONCENTRIC REDUCER
85	PJM MID & LOWER SUPPORT PIPE STUB	14		SA-240-316	1/2" THK X 16" OD (48-1/16" S.O.) X 4" LG
86	PJM MID SUPPORT REPAD	7		SA-240-316	1/2" THK X 36" OD
87	PJM LOWER SUPPORT REPAD	7		SA-240-316	5/8" THK X 36" OD (TRIMMED @ TOP & BOTTOM)
88	PJM UPPER SUPPORT	1		SA-240-316	1/2" THK X 16" OD (48-1/16" S.O.) X 44" LG
89					
90	(N02) INSERT	1		SA-240-316	1-1/2" THK X 16" X 20"
91					
92					
93	PJM VERTICAL SUPPORT PIPE REPAD	7		SA-240-316	3/4" THK X 20" OD
94					
95	REINFORCEMENT STRUCTURE REPAD	7		SA-240-316	1" THK X 18" X 39-3/8" S.O., ROLL TO 300" OD
96	REINFORCEMENT STRUCTURE GUSSET	7		SA-240-316	1-1/2" THK
97	REINFORCEMENT STRUCTURE FLG	7		SA-240-316	1-1/2" THK X 6" X 35-9/16" S.O., ROLL TO 22-13/16" IR
98	REINFORCEMENT STRUCTURE SIDE FLG	14		SA-240-316	1-1/2" THK X 12" X 4"
99					
100	DONUT SUPPORT RING	1		SA-312 316 SMLS	6" SCH 80S (0.432") PIPE RING ROLLED TO 164" CENTER DIAMETER
101	DONUT SUPPORT RING LATERALS	7		SA-312 316 SMLS	4" SCH 80S (0.337") X 29" LG
102	DONUT RING OUTRIGGER PIPE	5		SA-312 316 SMLS	4" SCH 80S (0.337") X 48" LG
103	OUTRIGGER PIPE CAP	5		SA-403-316	4" SCH 80S (0.337") PIPE CAP
104					
105	PJM UPPER SUPPORT PIPE SLEEVE	7		SA-479-316	Ø3-1/2" ROUND BAR X 20" LG, BORED TO 2-1/2" ID
106	PJM MID & LOWER SUPPORT PIPE SLEEVE	14		SA-479-316	Ø3-1/2" ROUND BAR X 14-3/4" LG, BORED TO 2-1/2" ID
107					
108					
109					
110					
111					
112	SKIRT BACKING BAR	AR		SA-240-316	1/4" THK X 2-1/2" FB RING ROLLED EZ WAY TO 299-7/8" OD
113	SKIRT BACKING BAR	AR		SA-479-316	1/4" THK X 2-1/2" FB RING ROLLED EZ WAY TO 299-7/8" OD
114	PJM LATERAL BACKING BAR	21		SA-240-316	1/4" X 1-1/2"
115	CLUSTER BACKING BAR	AR		SA-240-316	1/4" THK X 1"
116					
117	CAMERA PORT CONE	2		SA-240 316	3/8" THK X 8-5/8" OD X 45° X 6" HIGH CONE
118					
119					
120	JACKING LUG BASE PL	4		SA-240 316	1" THK
121	JACKING LUG VERTICAL GUSSET	8		SA-240 316	1" THK
122	JACKING LUG BRIDGE GUSSET	8		SA-240 316	1" THK
123	JACKING LUG TEMPORARY BASE PL. DOUBLER	4		SA-240 316	1" THK
124					
125					
200	SKIRT EXTENSION TOP RING	1		SA-240 304	1" THK X 304" OD X 288" ID 1
201	SKIRT EXTENSION	1		SA-240 304	1" THK, 300" (945 5/8") ID X 78-1/2" LG 1
202					
203	SKIRT EXTENSION ACCESS LIP	2		SA-240 304	1/2" THK X 24" ID (77" S.O.) X 4" LG
204	SKIRT VENT	8		SA-312 304	4" SCH 40 (.237" WALL) X 6-1/2" LG
205	GROUNDING LUG	4		SA-240 304	1/4" THK X 3" X 5"
206	VACUUM RING	1		SA-240 304	1" THK X 326" OD X 302-1/8" ID
207					
208					
209	NOZ (N01) EXTENSION	1		SA-240 316	1/2" THK X 24" OD (73-13/16" S.O.) X 24" LG
210	NOZ (N01) BLIND	1		SA-182 316	24" ANSI 150# RF BLIND
211	NOZ (N01) GASKET	1		EPDM	1/8" THK RING GASKET FOR 24" ANSI 150# PIPE FLG
212	NOZ (N01) STUD	20		SA-193-B8M	1-1/4"-8NC X 7-1/4" LG
213	NOZ (N01) NUT	40		SA-194-8M	1-1/4"-8NC HEAVY HEX
214	NOZ (N01) DAVIT MAST	1		SA-312 304	2-1/2" SCH 40 (.203" WALL) X 37-3/8" LG, MITER ONE END @ 45 DEG 1
215	NOZ N01 DAVIT ARM	1		SA-312 304	2-1/2" SCH 40 (.203" WALL) X 22-3/16" LG, MITER ONE END @ 45 DEG
216	NOZ N01 DAVIT CAP	1		SA-403 304	2-1/2" SCH 40 (.203" WALL) B.W. PIPE CAP
217	NOZ N01 DAVIT GUSSET	1		SA-240 304	1/2" THK X 7" X 7"
218	NOZ N01 DAVIT SOCKET	1		SA-312 304	3" SCH 40 (.216" WALL) X 10" LG
219	NOZ N01 DAVIT COLLAR	1		SA-312 304	3" SCH 40 (.216" WALL) X 3/4" LG
220	NOZ N01 DAVIT ATTACHMENT PL	1		SA-240 304	3/4" THK X 8" X 5"
221	NOZ N01 DAVIT GREASE FITTING	1		SS 304	1/8" MALE NPT GREASE ZIRC
222	NOZ N01 DAVIT COVER LOOP	1		SA-479 304	1/2" OD ROUND BAR
223	NOZ N01 DAVIT EYEBOLT	1		SS 304	3/4" OD EYEBOLT w/10" LG SHANK, NUT & WASHER
224	DAVID SHACKLE	1		SS 304	5/8" SHACKLE
225	NOZ N01 REPAD	1		SA-240 316	1/2" THK X 5" WIDE
226	NOZ CAP	3		SA-403 316	8" SCH 80S (0.500" WALL) PIPE CAP
227	NOZ CAP	6		SA-403 316	1" SCH 160S (0.25" WALL) PIPE CAP
228	NOZ CAP	9		SA-403 316	2" SCH 160S (0.343" WALL) PIPE CAP
229	NOZ CAP	4		SA-403 316	3" SCH 80S (0.300" WALL) PIPE CAP
230	NOZ CAP	2		SA-403 316	4" SCH 80S (0.337" WALL) PIPE CAP
231					
232	NOZ PLUG	36		SA-479 316	1" OD ROUND BAR X 1-1/4" LG
233					
234					
235	EDUCTOR INLET PIPING INTERNAL ELBOW	4		SA-403 316	4" SCH 80S (0.337" WALL) 90 DEG SHORT RADIUS B.W. ELBOW
236	EDUCTOR INLET PIPING INTERNAL TEE	2		SA-403 316	4" SCH 80S (0.337" WALL) X 3" SCH 80S (0.300" WALL) B.W. REDUCING TEE
237	EDUCTOR INLET INTERNAL PIPE	4		SA-312 316 SMLS	4" SCH 80S (0.337" WALL) X (1) @ 32-1/4", (1) @ 35-15/16", @ 40-1/2" & (1) @ 11-5/8" LG
238	EDUCTOR INLET PIPING INTERNAL ELBOW	1		SA-403 316	3" SCH 80S (0.300" WALL) 45 DEG DEG SHORT RADIUS B.W. ELBOW (TRIM TO 26 DEG)
239	EDUCTOR INLET INTERNAL PIPE	2		SA-312 316 SMLS	3" SCH 80S (0.300" WALL) X 3" LG, THREAD ONE END 3" NPT
240	EDUCTOR INLET INTERNAL CPLG	1		SA-182 316	3/4" 3000# THREADOLET TO SADDLE ON 4" IPS
241	EDUCTOR INLET INTERNAL CPLG	1		SA-182 316	3/4" 3000# FULL CPLG
242	EDUCTOR INLET PIPING CAP	2		SA-403 316	4" SCH 80S (0.337" WALL) PIPE CAP
243	EDUCTOR	2		SS316	3" JACOBY TARBOX TB-3926-T11FNPT
244	EDUCTOR	2		SS316	3/4" JACOBY TARBOX TB-3923-T11
245	EDUCTOR SUPPORT	4		SA-240 316	1/2" THK
246					
247					
248	NOZ N08C BOTTOM PIPE	1		SA-312 316	2" SCH 160 (0.344" WALL) PIPE
249					
250					
251					
252	NOZ (N80) EXTENSION PIPE	2		SA-312 316 SMLS	10" SCH 80S X (1) @ 40" & (1) @ 144" LG
253	NOZ (N80) ELBOW	1		SA-403 316	10" SCH 80S (0.500" WALL) 90 DEG LONG RADIUS B.W. ELBOW
254	NOZ (N80) SKIRT PENETRATION	1		SA-312 304	18" SCH 40S (0.375" WALL) X 4" LG
255	NOZ (N80) GUIDE	4		SA-240 304	1/4" THK X 4" X (3) @ 3-3/16" & (1) @ 3-1/4"
256	VORTEX BREAKER	3		SA-240 316	3/8" THK
257					
258	NOZ (N82) REPAD	1		SA-240 316	5/16" THK X 3" WIDE
259					
260	NOZ (N05) REPAD	1		SA-240 316	5/8" THK X 4" WIDE
261	NOZ (N05) EXTENSION	1		SA-312 316 SMLS	10" SCH 80S (.500" WALL) X 14" LG
262					
263					
264					
265					
266					
267					
268					
269					
270					
271					
272					
273					
274					
275					
276					
277					
278					
279					
280					
281					
282					
283					
284					
285					
286					

NOTES

1. ALL FLANGE BOLT HOLES TO STRADDLE MAJOR VESSEL CENTERLINES.
2. EACH SECTION OF NOZZLE REPADS AND ALL REPADS CROSSING A WELD SEAM REQUIRE AN 1/8" NPT WEEP HOLE w/PLUG.
3. CONDUCT 15psi AIR TEST FOR ALL NOZZLE REPADS AND ALL REPADS CROSSING A WELD SEAM.
4. ALL WELDS TO BE CONTINUOUS UNLESS OTHERWISE SPECIFIED.
5. CLEAN HEAT TINT AREA WITH FLAPPER WHEEL.
6. ALL WELDS TO BE CLEANED INSIDE AND OUTSIDE WITH SS POWER WIRE BRUSH.
7. APPLY "NEVER-SEEZ" OR EQUAL TO ALL EXTERNAL FLANGE FASTENERS & DAVIT EYEBOLTS.
8. IMMEDIATELY PRIOR TO SHIPMENT CLEAN ALL INNER SURFACES OF DIRT, PAINT, SCALE, WELD SMUT, OXIDE AND GREASE.
9. COVER AND PROTECT ALL NOZZLES AND OPENINGS w/HARDBOARD OR EQUAL FOR SHIPMENT.
10. OVERPRESSURE PROTECTION SHALL BE PROVIDED BY THE CUSTOMER PRIOR TO PLACING VESSEL IN SERVICE. 1

DRAWING REFERENCE LIST

LIFTING DETAILS----------27202-L

SHIPPING DETAILS----------27202-S

WELD MAP----------27202-W

LADDER, PLATFORM & PINING CLIPS DETAILS----------27202-C

INSULATION SUPPORT DETAILS----------27202-N

LADDER & PLATFORM DETAILS----------BIG C INDUSTRIES DWG (TO FOLLOW)

SPECIAL NOTES

1. FOR 316 TO 316 USE PROCEDURE GM08-F6O OR GT08-F6M OR FC08-F6DS OR SA08-F6 WITH ER316L FILLER.
   FOR 316 TO 304 USE PROCEDURE GM440B-F44 WITH ERNiCrMo-3 FILLER.
   FOR 304 TO 304 USE PROCEDURE GM08-F6O OR GT08-F6M OR FC08-F6DS OR SA08-F6 WITH ER308L FILLER.
   FOR 304 TO 316 USE PROCEDURE GM08-F6O OR GT08-F6M OR FC08-F6DS OR SA08-F6 WITH ER316L FILLER.
2. VESSEL WEIGHTS
   VESSEL EMPTY----------319,300 LBS.
   PRE-OPERATING----------332,200 LBS.
   FULL OF WATER----------1,380,900 LBS.
   OPERATING----------1,359,800 LBS.
3. NOT USED.
4. ALL WELDING SHALL BE PROTECTED FROM WIND, RAIN AND OTHER HARMFUL WEATHER CONDITIONS WHICH MAY AFFECT WELD QUALITY.
5. ULTRASONIC TESTING (UT) MAY BE USED IN LIEU OF RT WHEN APPROVED VIA SDDR.
6. PRIOR TO WELDING AREAS OF THE SHELL HEADS AND SKIRT WHERE LIFTING AND TAILING LUGS WILL BE ATTACHED, SHALL BE ULTRASONICALLY EXAMINED OVER 100% OF THE AREA TO BE WELDED AND A MARGIN THAT EXTENDS 5" BEYOND THE WELDS IN ALL DIRECTION.
7. 100% PENETRANT TESTING (PT) IS REQUIRED FOR WELD ATTACHING LIFTING & TAILING LUGS, AND PIPE SUPPORTS TO VESSELS, SHELL, HEADS AND SKIRT.
8. PMI ALL PRESSURE RETAINING MATERIALS & WELDS PER BECHTEL SPEC. 24590-BOF-3PS-MVSC-T0003 EXHIBIT 1 (24590-WTP-3PS-G000-T0002) AND HTTP POA-11-HOP-09-310.
9. RT 10% OF THE LENGTH OF EACH WELDER'S PRODUCTION OF VESSEL MAIN SEAMS BUTT WELDS WITH THE MINIMUM EXTENT BEING ALL "T" JOINTS, AT LEAST 10% OF INTERNAL PIPING BUTT WELDS FOR THE FULL CIRCUMFERENCE, AT LEAST 10% OF THE NOZZLE-TO-SHELL OR HEAD WELDS LOCATED IN THE PRIMARY CONTAINMENT MADE BY EACH WELDER OVER 100% OF ITS CIRCUMFERENCE AND 10% LENGTH OF REMAINING LONG SEAMS PER BECHTEL SPEC. 24590-BOF-3PS-MVSC-T0003 EXHIBIT 6 (24590-WTP-3PS-MV00-T0001) PARAGRAPH 6.4.2.
10. ALL STAINLESS MATERIAL TO HAVE A MAXIMUM CARBON CONTENT OF 0.030%
11. ENSURE ALL INTERNALS & INTERNAL PIPING ARE FREE FROM OBSTRUCTIONS.
12. BRONZE, COPPER, LEAD, ZINC, TIN, ANTIMONY, CADMIUM, THEIR ALLOYS OR MATERIALS CONTAINING SUCH METALS AS THEIR BASIC CONSTITUENTS, OR MOLYBDENUM AND HALOGENS SHALL NOT BE USED IN DIRECT CONTACT WITH S.S.
13. CONTACT MATERIALS INCLUDING MARKING MATERIALS, TEMPERATURE INDICATING CRAYONS, ADHESIVE BACKED AND PRESSURE SENSITIVE TAPE, AND BARRIER AND WRAP MATERIALS MAY BE USED ONLY UNDER THE FOLLOWING LIMITS:
    a. THE TOTAL HALOGEN CONTENT SHALL NOT EXCEED 200 PARTS PER MILLION (PPM).
    b. THE TOTAL SULFUR CONTENT SHALL NOT EXCEED 400 PPM.
    c. NO INTENTIONALLY ADDED LOW MELTING POINT METALS SUCH AS LEAD, ZINC, COPPER, ANTIMONY AND MERCURY.
14. ANY MARKING METAL AND PACKING TAPE USED ON S.S. ARE REQUIRED TO BE MADE FROM LOW CHLORIDE (LESS THAN 200 PPM) AND LOW SULFUR (LESS THAN 400 PPM) TYPE MATERIAL. FABRICATOR SHALL PROVIDE A CHEMICAL ANALYSIS REPORT OF THE MARKER/TAPE FOR EACH LOT OR TYPICAL PRODUCT SAMPLE.
15. CLEANING MATERIALS MAY BE NON-HALOGENATED SOLVENTS OR POTABLE WATER CONTAINING NO MORE THAN 50 PPM CHLORIDE.
16. CONTACT MATERIALS SHALL BE CONTROLLED AND DOCUMENTED IN ACCORDANCE WITH THE SELLER'S INSPECTION AND TEST PLAN AS APPROVED BY THE BUYER.
17. AUSTENITIC S.S. (P-No. 8) WELDING MATERIALS FOR PRESSURE BOUNDARY & LOAD-BEARING WELDS SHALL CONTAIN A MINIMUM DELTA FERRITE CONTENT OF 5% PER (24590-WTP-3PS-MV82-T0001) PARAGRAPH 6.1.
18. HYDRO WATER TO CONTAIN NO MORE THAN 50 PPM CHLORIDE.
19. ALL PRESSURE RETAINING WELDS TO BE 2 PASS MINIMUM.
20. NOTED UNSIZED WELDS ARE NON-CODE & NON-STRUCTURAL WELDS & ARE MINIMUM SEAL WELDS.
21. JACKET NOT INCLUDED IN DESIGN AND IS NOT PART ASME CODE STAMPED. ABANDONED IN-PLACE COOLING JACKET TO BE UNUSED AND VENTED TO ATMOSPHERE.
22. SEE "PACKAGING, HANDLING & STORAGE REQUIREMENTS" SPEC. 24590-WTP-3PS-G000-T0003 FOR SHIPPING REQUIREMENTS.
23. SEE LIFTING PROCEDURE FOR SHIPPING & LIFTING & TIE DOWN INFORMATION.

NOTE:
ALL BILL OF MATERIAL ITEMS #200 AND HIGHER ARE NEW ITEMS

DESIGN DATA

Code	ASME SECTION VIII, DIVISION 1, 2001, 2003 ADDENDA
Design Conditions	Shellside
Design Pressure	15 PSIG & FV
Design Temperature	155 °F
MDMT	-23 °F
Hydrotest	20 PSIG
Corrosion Allowance	0.04"
Other NDE	SEE SPECIAL NOTES 5-8
Radiography	SPOT (UW11(b)); SEE SPECIAL NOTE 9
Insulation:	3" THK, BY OTHERS
Gasket Material:	1/8" THK EPDM
Fasteners:	SA193 B8M STUDS & SA194 8M NUTS

REVISIONS

Rev.	Date	Drawn By	Checked By	Description
1	3/2/18	DKM	JPM	CORRECTED BOM DESCRIPTIONS ITEMS 200,201&214; UPDATED SPECIAL NOTE 3.

Please note that source, special nuclear, and byproduct materials, as defined in the Atomic Energy Act of 1954 (AEA) are regulated at the U. S. Department of Energy (DOE) facilities exclusively by DOE acting pursuant to its AEA authority. DOE asserts that pursuant to AEA, it has sole and exclusive responsibility and authority to regulate source, special nuclear, and byproduct materials at DOE-owned nuclear facilities. Information contained herein on radionuclides is provided for process description purposes only.

Do Not Scale Drawing

Shop Tolerance	
Fractional	± 1/8"
Angular	± 1°
Circumference	± 1/16"
Mach. Surface	± 1/64"

HARRIS Thermal Transfer Products
615 S. Springbrook Rd., Newberg, OR 97132
Phone (503)538-1260 / Fax (503)538-4281

Drawn	DKM	Title:	300" ID PROCESS CONDENSATE LAG STORAGE VESSEL
Checked	JPM	Customer:	BECHTEL NATIONAL INC.
Approved	ERG	Destination:	RICHLAND, WASHINGTON
Quote No.	-	Date: 10/20/17	Size: D
Job No.	27202	Drawing No.: 27202	Rev.: 1
P.O. No.	POA-MVSC-00007	Scale: NA	Sheet 1 Of 13

BECHTEL PROJECT: HANFORD TANK WASTE TREATMENT AND IMMOBILIZATION PLANT (WTP PROJECT) 24590-CM-POA-MVSC-00007-02-00004 Rev. 00B
VESSEL: 300" ID PROCESS CONDENSATE LAG STORAGE VESSEL TAG#: 24590-BOF-MV-DEP-VSL-00005A

CONNECTION SCHEDULE

ITEM	SERVICE	SIZE	RATING	CLASS	FLANGE MATERIAL	NECK MATERIAL	NECK SCH	NECK WALL	NECK HEAT NO.	CONNECTING PIPE/ TUBE SIZE	Z * * DIMENSION	LAP RING (NONE THIS VESSEL) MATERIAL	LAP RING t	LAP RING OD	LAP RING HEAT NO.	REPAD MATERIAL	REPAD SIZE	REPAD HEAT NO.	WELD DET	WELD DWG	WELD A	WELD SIZE B	WELD SIZE C	WELD SIZE D
N01	MANWAY	24" OD	---	STUB	---	SA-240-316	---	1/2"		BLIND (ITEM 210)	430"	---	---	---		SA-240 316	1/2"		17	D5		3/8	7/16	3/8
N02	NOT USED/OVERFLOW	8"	---	STUB	---	SA-312 TP316 SMLS	80S	.500"		CAPPED (ITEM 226)	342"	---	---	---		---	---		13	D5		3/8	-	
N04	NOT USED/SPARE	4"	---	STUB	---	SA-312 TP316 SMLS	80S	.337"		CAPPED (ITEM 28)	414"	---	---	---		---	---		4	D5		3/8	3/8	
N05	VENT	10"	---	STUB	---	SA-312 TP316 SMLS	80S	.500"		10" - 10S	430"	---	---	---		SA-240 316	5/8"		5	D5		3/8	-	1/2
N06	SPARE INSTRUMENTATION	6"	---	STUB	---	SA-312 TP316 SMLS	80S	.432"		CAPPED (ITEM 21)	402"	---	---	---		---	---		30	D9		3/8	7/16	
N06A	SPARE BALANCE	1"	---	STUB	---	SA-312 TP316 SMLS	160S	.250"		CAPPED (ITEM 227)	405"	---	---	---		---	---		30	D9		1/4	5/16	
N06B	SPARE DENSITY	1"	---	STUB	---	SA-312 TP316 SMLS	160S	.250"		CAPPED (ITEM 227)	406"	---	---	---		---	---		30	D9		1/4	5/16	
N06C	SPARE LEVEL	1"	---	STUB	---	SA-312 TP316 SMLS	160S	.250"		CAPPED (ITEM 227)	407"	---	---	---		---	---		30	D9		1/4	5/16	
N07	SPARE TEMPERATURE	2" OD X 1"	---	STUB	---	SA-479 316	---	.59"		1 PLUGGED (ITEM 232)	399"	---	---	---		---	---		15	D5		3/8	7/16	
N08	INSTRUMENTATION	6"	---	STUB	---	SA-312 TP316 SMLS	80S	.432"		CAPPED (ITEM 21)	402"	---	---	---		---	---		30	D9		3/8	7/16	
N08A	BALANCE	1"	---	STUB	---	SA-312 TP316 SMLS	160S	.250"		1" - 40S	405"	---	---	---		---	---		30	D9		1/4	5/16	
N08B	DENSITY	1"	---	STUB	---	SA-312 TP316 SMLS	160S	.250"		1" - 40S	406"	---	---	---		---	---		30	D9		1/4	5/16	
N08C	LEVEL	1"	---	STUB	---	SA-312 TP316 SMLS	160S	.250"		1" - 40S	407"	---	---	---		---	---		30	D9		1/4	5/16	
N09	SPARE INSTRUMENTATION	6"	---	STUB	---	SA-312 TP316 SMLS	80S	.432"		CAPPED (ITEM 21)	402"	---	---	---		---	---		30	D9		3/8	7/16	
N09A	SPARE BALANCE	1"	---	STUB	---	SA-312 TP316 SMLS	160S	.250"		CAPPED (ITEM 227)	405"	---	---	---		---	---		30	D9		1/4	5/16	
N09B	SPARE DENSITY	1"	---	STUB	---	SA-312 TP316 SMLS	160S	.250"		CAPPED (ITEM 227)	406"	---	---	---		---	---		30	D9		1/4	5/16	
N09C	SPARE LEVEL	1"	---	STUB	---	SA-312 TP316 SMLS	160S	.250"		CAPPED (ITEM 227)	407"	---	---	---		---	---		30	D9		1/4	5/16	
N10	INLET TO WASH RING	2"	---	STUB	---	SA-312 TP316 SMLS	160S	.343"		2" - 40S	386"	---	---	---		---	---		14	D5,D6		5/16	3/8	
N11	INLET TO WASH RING	2"	---	STUB	---	SA-312 TP316 SMLS	160S	.343"		2" - 40S	386"	---	---	---		---	---		14	D5,D6		5/16	3/8	
N12	INLET TO WASH RING	2"	---	STUB	---	SA-312 TP316 SMLS	160S	.343"		2" - 40S	386"	---	---	---		---	---		14	D5,D6		5/16	3/8	
N13	INLET TO WASH RING	2"	---	STUB	---	SA-312 TP316 SMLS	160S	.343"		2" - 40S	386"	---	---	---		---	---		14	D5,D6		5/16	3/8	
N14	NOT USED/AIR/VACUUM TO HLP-PJM-00060	2"	---	STUB	---	SA-312 TP316 SMLS	160S	.343"		CAPPED (ITEM 228)	414"	---	---	---		---	---		14	D5,D10		5/16	3/8	
N15	NOT USED/AIR/VACUUM TO HLP-PJM-00061	2"	---	STUB	---	SA-312 TP316 SMLS	160S	.343"		CAPPED (ITEM 228)	407"	---	---	---		---	---		14	D5,D10		5/16	3/8	
N16	NOT USED/AIR/VACUUM TO HLP-PJM-00062	2"	---	STUB	---	SA-312 TP316 SMLS	160S	.343"		CAPPED (ITEM 228)	407"	---	---	---		---	---		14	D5,D10		5/16	3/8	
N17	NOT USED/AIR/VACUUM TO HLP-PJM-00063	2"	---	STUB	---	SA-312 TP316 SMLS	160S	.343"		CAPPED (ITEM 228)	407"	---	---	---		---	---		14	D5,D10		5/16	3/8	
N18	NOT USED/AIR/VACUUM TO HLP-PJM-00064	2"	---	STUB	---	SA-312 TP316 SMLS	160S	.343"		CAPPED (ITEM 228)	407"	---	---	---		---	---		14	D5,D10		5/16	3/8	
N19	NOT USED/AIR/VACUUM TO HLP-PJM-00065	2"	---	STUB	---	SA-312 TP316 SMLS	160S	.343"		CAPPED (ITEM 228)	407"	---	---	---		---	---		14	D5,D10		5/16	3/8	
N20	NOT USED/AIR/VACUUM TO HLP-PJM-00066	2"	---	STUB	---	SA-312 TP316 SMLS	160S	.343"		CAPPED (ITEM 228)	407"	---	---	---		---	---		14	D5,D10		5/16	3/8	
N21	NOT USED/AIR/VACUUM TO HLP-PJM-00067	2"	---	STUB	---	SA-312 TP316 SMLS	160S	.343"		CAPPED (ITEM 228)	407"	---	---	---		---	---		14	D5,D10		5/16	3/8	
N25	NOT USED/SPARE	2"	---	STUB	---	SA-312 TP316 SMLS	160S	.343"		CAPPED (ITEM 29)	414"	---	---	---		---	---		4	D5		5/16	3/8	
N27	PROCESS CONDENSATE INLET	3"	---	STUB	---	SA-312 TP316 SMLS	80S	.300"		3" - 40S	386"	---	---	---		---	---		4	D5		5/16	3/8	
N28	INTAKE AIR	2"	---	STUB	---	SA-312 TP316 SMLS	160S	.343"		2" - 40S	396"	---	---	---		---	---		4	D5		5/16	3/8	
N29	NOT USED/INLET	2"	---	STUB	---	SA-312 TP316 SMLS	160S	.343"		CAPPED (ITEM 228)	386"	---	---	---		---	---		4	D5		5/16	3/8	
N30	DEP SUMP INLET/RECIRCULATED CONDENSATE	3"	---	STUB	---	SA-312 TP316 SMLS	80S	.300"		3" - 40S	400"	---	---	---		---	---		4	D5		5/16	3/8	
N31	NOT USED/INLET	3"	---	STUB	---	SA-312 TP316 SMLS	160S	.437"		CAPPED (ITEM 229)	412"	---	---	---		---	---		4	D5		3/8	7/16	
N32	NOT USED/PUMP SUCTION	4"	---	STUB	---	SA-312 TP316 SMLS	80S	.337"		CAPPED (ITEM 230)	36-1/2"	---	---	---		---	---		DD	D10		3/8	7/16	
N33	NOT USED/INLET	3"	---	STUB	---	SA-312 TP316 SMLS	160S	.437"		CAPPED (ITEM 229)	386"	---	---	---		---	---		4	D5		7/16	3/8	
N34	NOT USED/INLET WITH DIP PIPE	3"	---	STUB	---	SA-312 TP316 SMLS	80S	.300"		CAPPED (ITEM 229)	414"	---	---	---		---	---		11	D5		5/16	3/8	
N36	NOT USED/OUTLET FROM JACKET	4"	---	STUB	---	SA-312 TP316 SMLS	80S	.337"		CAPPED (ITEM 230)	65"	---	---	---		---	---	1	Ae	D13		SEAL	SEAL	
N37	NOT USED/INLET	3"	---	STUB	---	SA-312 TP316 SMLS	80S	.300"		CAPPED (ITEM 229)	399"	---	---	---		---	---		4	D5		5/16	3/8	
N39	NOT USED/SPARGE AIR	2"	---	STUB*	---	SA-312 TP316 SMLS	160S	.343"		1 PLUGGED (ITEM 232)	414'	---	---	---		---	---		35	D10		5/16	3/8	
N40	NOT USED/SPARGE AIR	2"	---	STUB*	---	SA-312 TP316 SMLS	160S	.343"		PLUGGED (ITEM 232)	410"	---	---	---		---	---		35	D10		5/16	3/8	
N41	NOT USED/SPARGE AIR	2"	---	STUB*	---	SA-312 TP316 SMLS	160S	.343"		PLUGGED (ITEM 232)	410"	---	---	---		---	---		35	D10		5/16	3/8	
N42	NOT USED/SPARGE AIR	2"	---	STUB*	---	SA-312 TP316 SMLS	160S	.343"		PLUGGED (ITEM 232)	410"	---	---	---		---	---		35	D10		5/16	3/8	
N43	NOT USED/SPARGE AIR	2"	---	STUB*	---	SA-312 TP316 SMLS	160S	.343"		PLUGGED (ITEM 232)	410"	---	---	---		---	---		35	D10		5/16	3/8	
N44	NOT USED/SPARGE AIR	2"	---	STUB*	---	SA-312 TP316 SMLS	160S	.343"		PLUGGED (ITEM 232)	410"	---	---	---		---	---		35	D10		5/16	3/8	
N45	NOT USED/SPARGE AIR	2"	---	STUB*	---	SA-312 TP316 SMLS	160S	.343"		PLUGGED (ITEM 232)	410"	---	---	---		---	---		35	D10		5/16	3/8	
N46	NOT USED/SPARGE AIR	2"	---	STUB*	---	SA-312 TP316 SMLS	160S	.343"		PLUGGED (ITEM 232)	410"	---	---	---		---	---		35	D10		5/16	3/8	
N47	SECONDARY STEAM BLOWDOWN INLET	2"	---	STUB*	---	SA-312 TP316 SMLS	160S	.343"		2" - 40S	400"	---	---	---		---	---		39	D10		5/16	3/8	
N48	NOT USED/SPARGE AIR	2"	---	STUB*	---	SA-312 TP316 SMLS	160S	.343"		1 PLUGGED (ITEM 232)	400"	---	---	---		---	---		35	D10		5/16	3/8	
N49	NOT USED/SPARGE AIR	2"	---	STUB*	---	SA-312 TP316 SMLS	160S	.343"		PLUGGED (ITEM 232)	400"	---	---	---		---	---		35	D10		5/16	3/8	
N50	NOT USED/SPARGE AIR	2"	---	STUB*	---	SA-312 TP316 SMLS	160S	.343"		PLUGGED (ITEM 232)	400"	---	---	---		---	---		35	D10		5/16	3/8	
N51	NOT USED/SPARGE AIR	2"	---	STUB*	---	SA-312 TP316 SMLS	160S	.343"		PLUGGED (ITEM 232)	400"	---	---	---		---	---		35	D10		5/16	3/8	
N52	NOT USED/SPARGE AIR	2"	---	STUB*	---	SA-312 TP316 SMLS	160S	.343"		PLUGGED (ITEM 232)	400"	---	---	---		---	---		35	D10		5/16	3/8	
N53	NOT USED/SPARGE AIR	2"	---	STUB*	---	SA-312 TP316 SMLS	160S	.343"		PLUGGED (ITEM 232)	400"	---	---	---		---	---		35	D10		5/16	3/8	
N54	NOT USED/SPARGE AIR	2"	---	STUB*	---	SA-312 TP316 SMLS	160S	.343"		PLUGGED (ITEM 232)	396"	---	---	---		---	---		35	D10		5/16	3/8	
N55	NOT USED/SPARGE AIR	2"	---	STUB*	---	SA-312 TP316 SMLS	160S	.343"		PLUGGED (ITEM 232)	396"	---	---	---		---	---		35	D10		5/16	3/8	
N56	NOT USED/SPARGE AIR	2"	---	STUB*	---	SA-312 TP316 SMLS	160S	.343"		PLUGGED (ITEM 232)	396"	---	---	---		---	---		35	D10		5/16	3/8	
N57	NOT USED/SPARGE AIR	2"	---	STUB*	---	SA-312 TP316 SMLS	160S	.343"		PLUGGED (ITEM 232)	396"	---	---	---		---	---		35	D10		5/16	3/8	
N58	NOT USED/SPARGE AIR	2"	---	STUB*	---	SA-312 TP316 SMLS	160S	.343"		PLUGGED (ITEM 232)	396"	---	---	---		---	---		35	D10		5/16	3/8	
N59	NOT USED/SPARGE AIR	2"	---	STUB*	---	SA-312 TP316 SMLS	160S	.343"		PLUGGED (ITEM 232)	396"	---	---	---		---	---		35	D10		5/16	3/8	
N60	NOT USED/SPARGE AIR	2"	---	STUB*	---	SA-312 TP316 SMLS	160S	.343"		PLUGGED (ITEM 232)	396"	---	---	---		---	---		35	D10		5/16	3/8	
N61	NOT USED/SPARGE AIR	2"	---	STUB*	---	SA-312 TP316 SMLS	160S	.343"		PLUGGED (ITEM 232)	383"	---	---	---		---	---		35	D10		5/16	3/8	
N62	NOT USED/SPARGE AIR	2"	---	STUB*	---	SA-312 TP316 SMLS	160S	.343"		PLUGGED (ITEM 232)	383"	---	---	---		---	---		35	D10		5/16	3/8	
N63	NOT USED/SPARGE AIR	2"	---	STUB*	---	SA-312 TP316 SMLS	160S	.343"		PLUGGED (ITEM 232)	383"	---	---	---		---	---		35	D10		5/16	3/8	
N64	NOT USED/SPARGE AIR	2"	---	STUB*	---	SA-312 TP316 SMLS	160S	.343"		PLUGGED (ITEM 232)	383"	---	---	---		---	---		35	D10		5/16	3/8	
N65	NOT USED/SPARGE AIR	2"	---	STUB*	---	SA-312 TP316 SMLS	160S	.343"		PLUGGED (ITEM 232)	383"	---	---	---		---	---		35	D10		5/16	3/8	
N66	NOT USED/SPARGE AIR	2"	---	STUB*	---	SA-312 TP316 SMLS	160S	.343"		PLUGGED (ITEM 232)	383"	---	---	---		---	---		35	D10		5/16	3/8	
N67	NOT USED/SPARGE AIR	2"	---	STUB*	---	SA-312 TP316 SMLS	160S	.343"		PLUGGED (ITEM 232)	383"	---	---	---		---	---		35	D10		5/16	3/8	
N68	NOT USED/SPARGE AIR	2"	---	STUB*	---	SA-312 TP316 SMLS	160S	.343"		PLUGGED (ITEM 232)	383"	---	---	---		---	---		35	D10		5/16	3/8	
N69	NOT USED/SPARGE AIR	2"	---	STUB*	---	SA-312 TP316 SMLS	160S	.343"		PLUGGED (ITEM 232)	383"	---	---	---		---	---		35	D10		5/16	3/8	
N70	NOT USED/SPARGE AIR	2"	---	STUB*	---	SA-312 TP316 SMLS	160S	.343"		PLUGGED (ITEM 232)	383"	---	---	---		---	---		35	D10		5/16	3/8	
N71	NOT USED/SPARGE AIR	2"	---	STUB*	---	SA-312 TP316 SMLS	160S	.343"		PLUGGED (ITEM 232)	383"	---	---	---		---	---		35	D10		5/16	3/8	
N72	NOT USED/SPARGE AIR	2"	---	STUB*	---	SA-312 TP316 SMLS	160S	.343"		PLUGGED (ITEM 232)	383"	---	---	---		---	---		35	D10		5/16	3/8	
N73	NOT USED/SPARGE AIR	2"	---	STUB*	---	SA-312 TP316 SMLS	160S	.343"		PLUGGED (ITEM 232)	383"	---	---	---		---	---		35	D10		5/16	3/8	
N74	NOT USED/SPARGE AIR	2"	---	STUB*	---	SA-312 TP316 SMLS	160S	.343"		PLUGGED (ITEM 232)	383"	---	---	---		---	---		35	D10		5/16	3/8	
N76	NOT USED/CAMERA PORT	8"	---	STUB	---	SA-312 TP316 SMLS	80S	.500"		CAPPED (ITEM 226)	383"	---	---	---		---	---		10	D5		3/8	7/16	
N77	NOT USED/CAMERA PORT	8"	---	STUB	---	SA-312 TP316 SMLS	80S	.500"		CAPPED (ITEM 226)	407"	---	---	---		---	---		10	D5		3/8	7/16	
N78	EDUCTOR INLET	4"	---	STUB	---	SA-312 TP316 SMLS	80S	.337"		4"-40S	36-1/2"	---	---	---		---	---		23	D7		3/8	7/16	
N79	EDUCTOR INLET	4"	---	STUB	---	SA-312 TP316 SMLS	80S	.337"		4"-40S	36-1/2"	---	---	---		---	---		23	D7		3/8	7/16	
N80	VESSEL DISCHARGE OUTLET	10"	---	STUB	---	SA-312 TP316 SMLS	80S	.500"		10"-10S	-109"	---	---	---		---	---		7	D5		3/8		
N81	RECIRCULATED CONDENSATE	4"	---	STUB	---	SA-312 TP316 SMLS	80S	.337"		4"-40S	393"	---	---	---		---	---		4	D5		3/8	7/16	
N82	OVERFLOW	10"	---	STUB	---	SA-312 TP316 SMLS	80S	.500"		10"-10S	339"	---	---	---		SA-240 316	5/16"		16	D5		5/16		1/4
N83	VENT	2"	---	STUB	---	SA-312 TP316 SMLS	80S	.343"		2"-40S	393"	---	---	---		---	---		4	D5		5/16	3/8	

✱ = NOZZLES HAVE REDUCER (ITEM 27) ON TIP

✱✱ = "Z" DIMENSION TOLERANCE IS $\pm \frac{1}{4}$"

Please note that source, special nuclear, and byproduct materials, as defined in the Atomic Energy Act of 1954 (AEA) are regulated at the U. S. Department of Energy (DOE) facilities exclusively by DOE acting pursuant to its AEA authority. DOE asserts that pursuant to AEA, it has sole and exclusive responsibility and authority to regulate source, special nuclear, and byproduct materials at DOE-owned nuclear facilities. Information contained herein on radionuclides is provided for process description purposes only.

REVISIONS

Rev.	Date	Drawn By	Checked By	Description
1	3/2/18	DKM	JPM	UPDATED "CONNECTING PIPE" FIELD FOR SPARGER/AIR NOZ'S, NOZ (N07) & WELD DETAIL REF FOR (N36)

Do Not Scale Drawing

Shop Tolerance

Fractional	± 1/8"
Angular	± 1°
Circumference	± 1/16"
Mach. Surface	± 1/64"

HARRIS Thermal Transfer Products
615 S. Springbrook Rd., Newberg, OR 97132
Phone (503)538-1260 / Fax (503)538-4281

Drawn	DKM	Title:	NOZZLE SCHEDULE
Checked	JPM	Customer:	BECHTEL NATIONAL INC.
Approved	ERG	Destination:	RICHLAND, WASHINGTON
Quote No.	-	Date / Size / Drawing No. / Rev.	10/20/17 / D / 27202 / 1
Job No.	27202		
P.O. No.	POA-MVSC-00007	Scale: NONE	Sheet 2 Of 13

BECHTEL PROJECT: HANFORD TANK WASTE TREATMENT AND IMMOBILIZATION PLANT (WTP PROJECT) 24590-CM-POA-MVSC-00007-02-00004 Rev. 00B
VESSEL: 300" ID PROCESS CONDENSATE LAG STORAGE VESSEL TAG#: 24590-BOF-MV-DEP-VSL-00005A

NOZZLE ORIENTATION			
NOZZLE #	RADIUS	ANGLE (DEGREE)	"Z" DIM
N01	102"	244	430"
N02	SHELL SIDE	180	342"
N04	36"	180	414"
N05	TOP CENTER	N/A	430"
N06	93"	42	402"
N07	93"	193	399"
N08	93"	167	402"
N09	93"	302	402"
N10	127"	7	386"
N11	127"	97	386"
N12	127"	187	386"
N13	127"	277	386"
N14	14"	90	414"
N15	61"	25.5	407"
N16	61"	77	407"
N17	61"	128	407"
N18	61"	180	407"
N19	61"	231	407"
N20	61"	282.5	407"
N21	61"	334	407"
N25	18"	308.5	414"
N27	127"	315	386"
N28	102"	13	396"
N29	127"	45	386"
N30	90"	67.5	400"
N31	36"	270	412"
N32	SHELL SIDE	312	36.5"
N33	127"	67.5	386"
N34	18"	270	414"
N36	JACKET SIDE	180	65"
N37	93"	25.5	399"
N39	14"	180	414"
N40	50"	25.5	410"
N41	50"	77	410"
N42	50"	128	410"
N43	50"	180	410"
N44	50"	231	410"
N45	50"	282.5	410"
N46	50"	334	410"
N47	90"	0	400"
N48	90"	51	400"
N49	90"	103	400"
N50	90"	154	400"
N51	90"	205.5	400"
N52	90"	257	400"
N53	90"	308.5	400"
N54	102"	334	396"
N55	102"	25.5	396"
N56	102"	77	396"
N57	102"	127.5	396"
N58	102"	180	396"
N59	102"	231	396"
N60	102"	282.5	396"
N61	131"	347	383"
N62	131"	13	383"
N63	131"	38.5	383"
N64	131"	64	383"
N65	131"	90	383"
N66	131"	115.5	383"
N67	131"	141	383"
N68	131"	167	383"
N69	131"	193	383"
N70	131"	218.5	383"
N71	131"	244	383"
N72	131"	270	383"
N73	131"	295.5	383"
N74	131"	321	383"
N76	127"	205.5	383"
N77	72"	0	407"
N78	SHELL SIDE	270	36.5"
N79	SHELL SIDE	90	36.5"
N80	SHELL SIDE	330	-109"
N81	120"	20	393"
N82	SHELL SIDE	315	339"
N83	120"	340	393"

NOTE:
0° ON CUSTOMER ORIENTATION IS AT 180° ON THIS DWG.

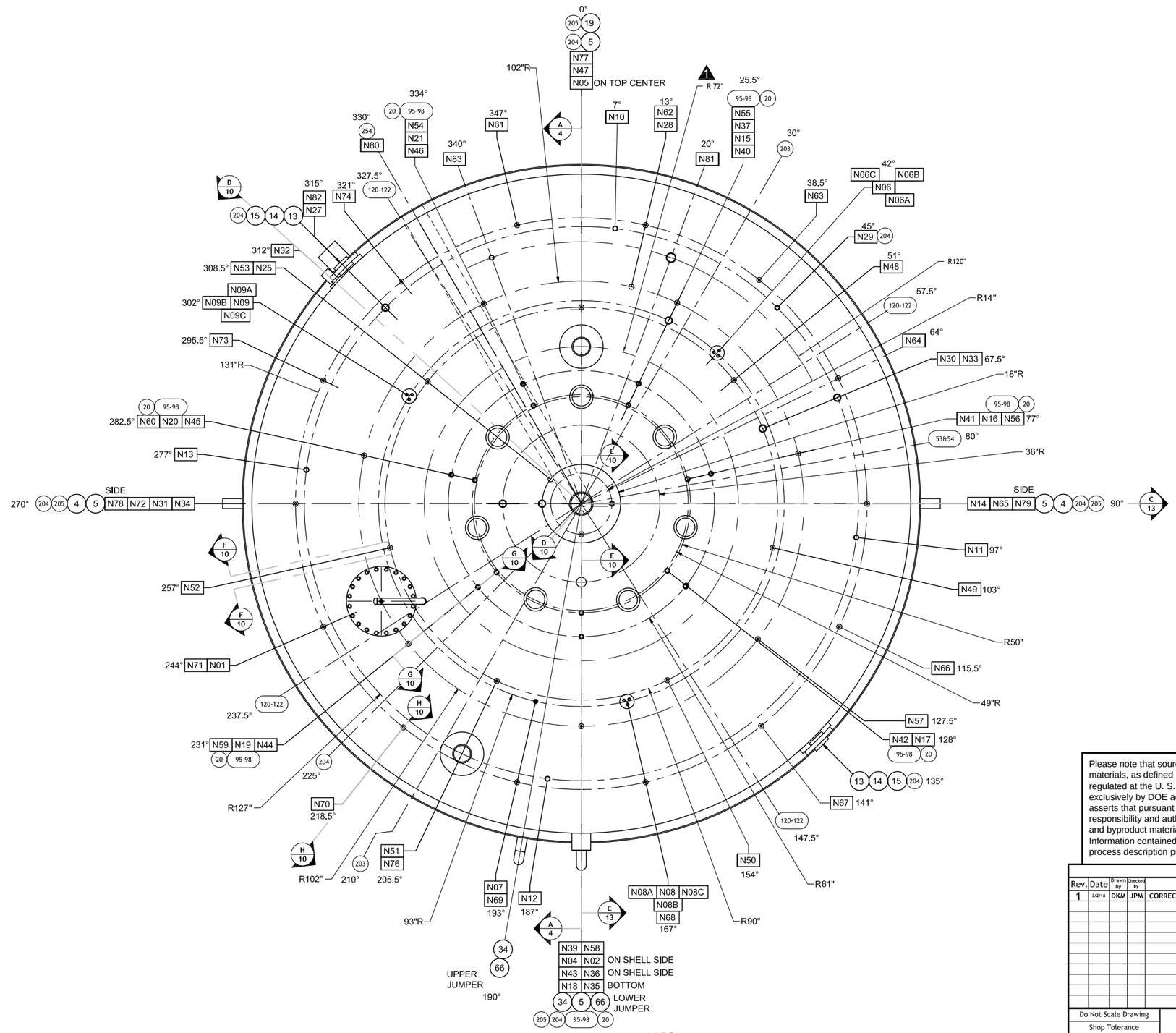

ORIENTATION

(SEE D2 FOR NOZZLE ORIENTATION & SCHEDULE)

SCALE: 1/2" = 1' - 0"

N
180°

NOTE:
INDELIBLY MARK "0°" PLANT NORTH ON BOTTOM OF SKIRT (ITEM 3) AND BOTH THE TOP AND BOTTOM OF SKIRT EXTENSION (ITEM 201) @ 180° SHOP ORIENTATION

Please note that source, special nuclear, and byproduct materials, as defined in the Atomic Energy Act of 1954 (AEA) are regulated at the U. S. Department of Energy (DOE) facilities exclusively by DOE acting pursuant to its AEA authority. DOE asserts that pursuant to AEA, it has sole and exclusive responsibility and authority to regulate source, special nuclear, and byproduct materials at DOE-owned nuclear facilities. Information contained herein on radionuclides is provided for process description purposes only.

REVISIONS

Rev.	Date	Drawn By	Checked By	Description
1	3/2/18	DKM	JPM	CORRECT RAD DIM

Do Not Scale Drawing

Shop Tolerance	
Fractional	± 1/8"
Angular	± 1°
Circumference	± 1/16"
Mach. Surface	± 1/64"

HARRIS
Thermal Transfer Products
615 S. Springbrook Rd., Newberg, OR 97132
Phone (503)538-1260 / Fax (503)538-4281

Drawn	DKM	Title:	NOZZLE ORIENTATIONS
Checked	JPM	Customer:	BECHTEL NATIONAL INC.
Approved	ERG	Destination:	RICHLAND, WASHINGTON
Quote No.	-	Date / Size / Drawing No. / Rev.	12/4/17 / D / 27202 / 1
Job No.	27202		
P.O. No.	POA-MVSC-00007	Scale: AS SHOWN	Sheet 3 Of 13

BECHTEL PROJECT: HANFORD TANK WASTE TREATMENT AND IMMOBILIZATION PLANT (WTP PROJECT) 24590-CM-POA-MVSC-00007-02-00004 Rev. 00B
VESSEL: 300" ID PROCESS CONDENSATE LAG STORAGE VESSEL TAG#: 24590-BOF-MV-DEP-VSL-00005A

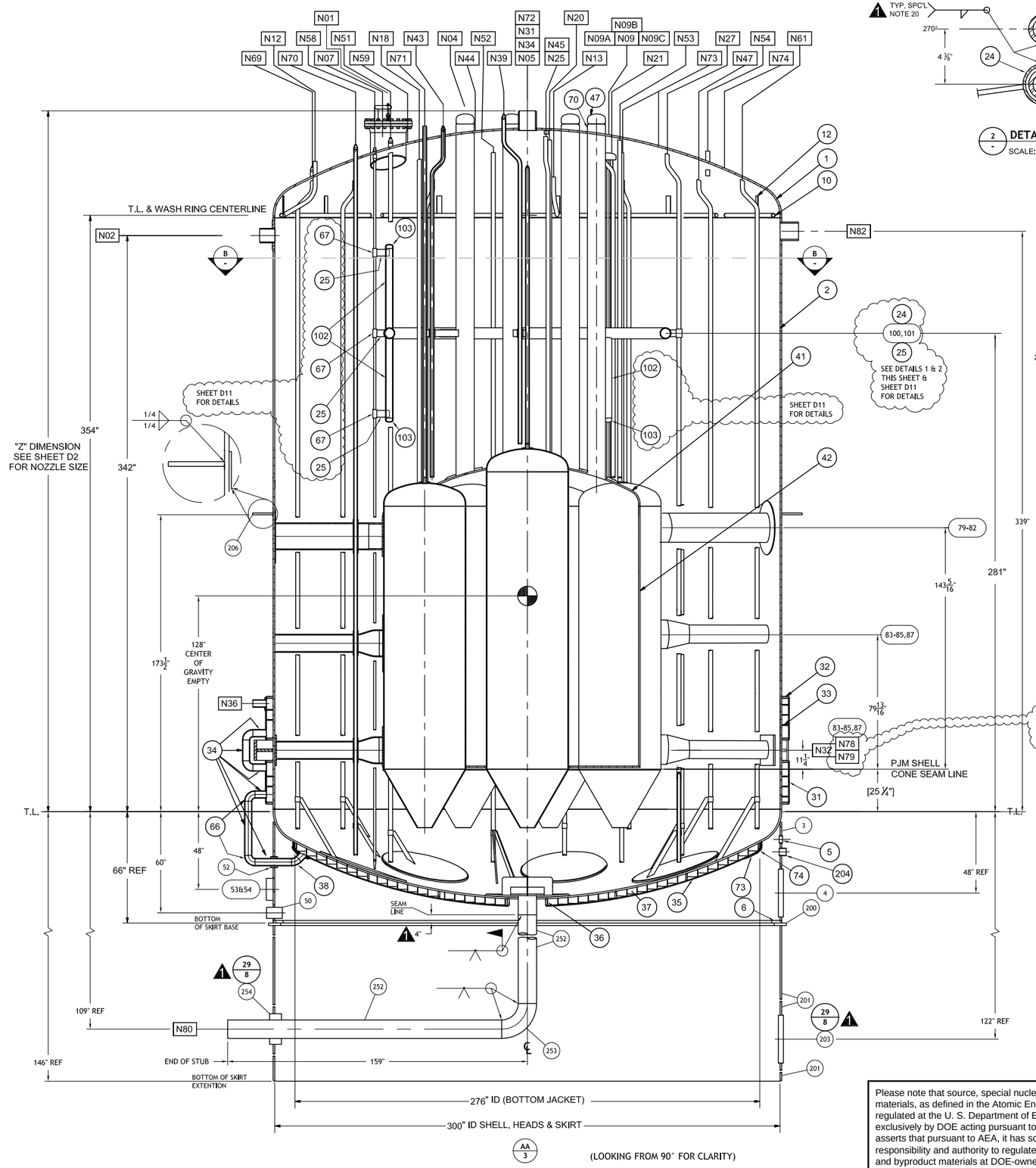

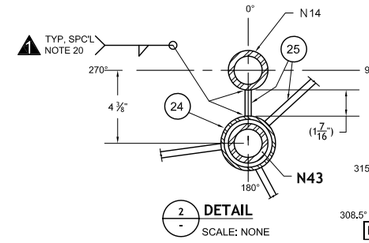

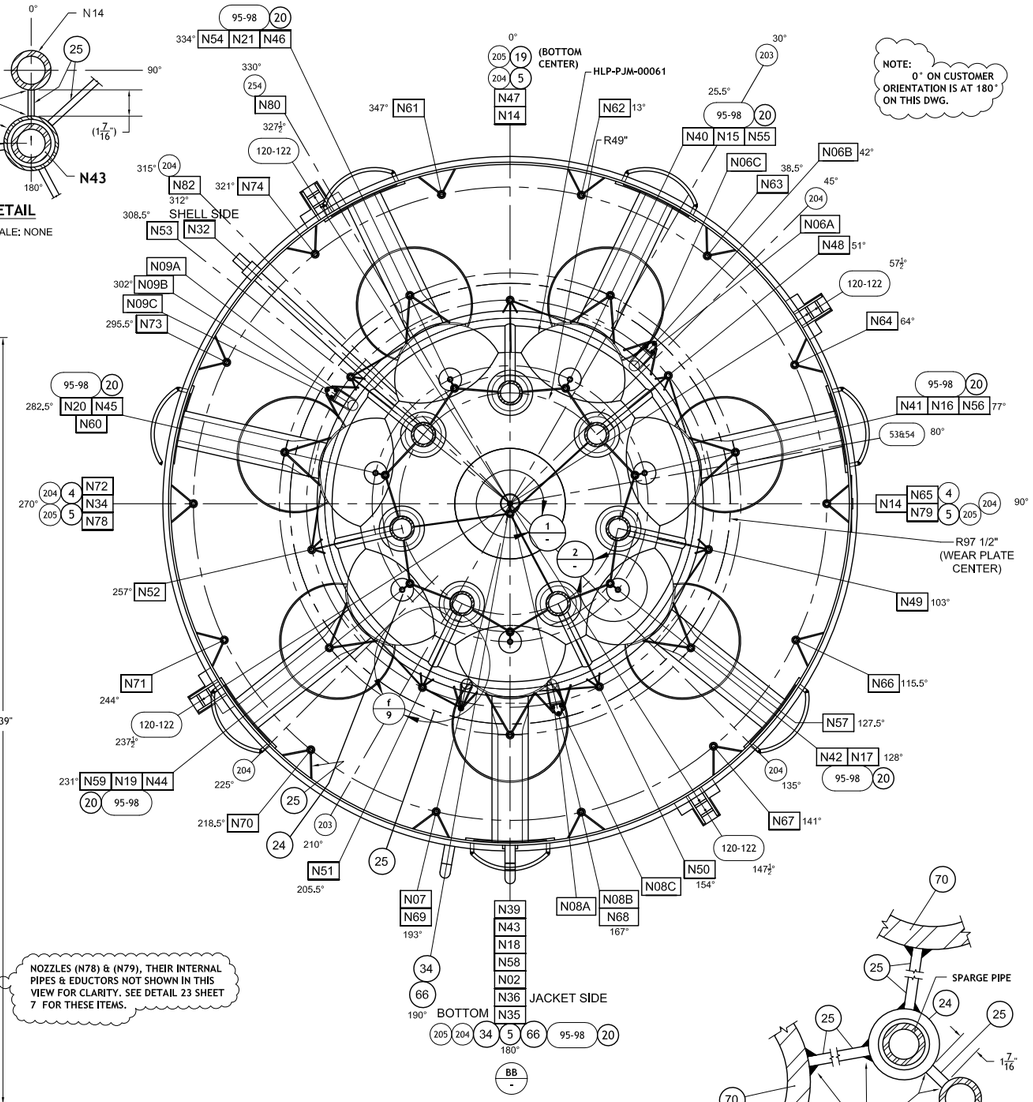

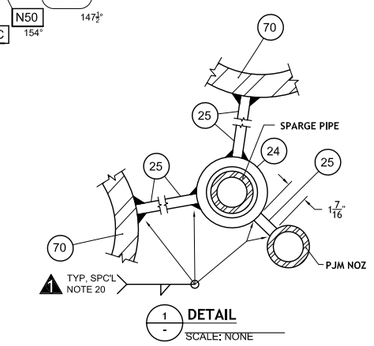

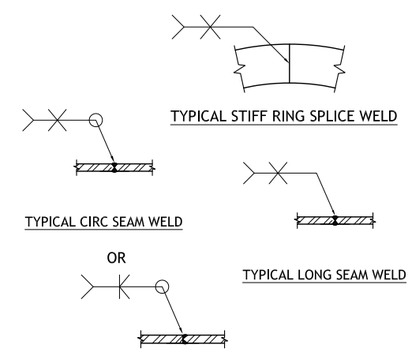

Please note that source, special nuclear, and byproduct materials, as defined in the Atomic Energy Act of 1954 (AEA) are regulated at the U. S. Department of Energy (DOE) facilities exclusively by DOE acting pursuant to its AEA authority. DOE asserts that pursuant to AEA, it has sole and exclusive responsibility and authority to regulate source, special nuclear, and byproduct materials at DOE-owned nuclear facilities. Information contained herein on radionuclides is provided for process description purposes only.

REVISIONS

Rev.	Date	Drawn By	Checked By	Description
1	3/2/18	DKM	JPM	UPDATED DIM; ADDED REF NOTES & DETAIL BUBBLES

Do Not Scale Drawing

Shop Tolerance	
Fractional	± 1/8"
Angular	± 1°
Circumference	± 1/16"
Mach. Surface	± 1/64"

HARRIS Thermal Transfer Products
615 S. Springbrook Rd., Newberg, OR 97132
Phone (503)538-1260 / Fax (503)538-4281

Drawn	DKM
Checked	JPM
Approved	EG
Quote No.	-
Job No.	27202
P.O. No.	POA-MVSC-00007

Title: LAYOUT OF INTERNALS
Customer: BECHTEL NATIONAL INC.
Destination: RICHLAND, WASHINGTON

Date	Size	Drawing No.	Rev.
10/20/17	D	27202	1

Scale: AS SHOWN Sheet 4 Of 13

BECHTEL PROJECT: HANFORD TANK WASTE TREATMENT AND IMMOBILIZATION PLANT (WTP PROJECT) 24590-CM-POA-MVSC-00007-02-00004 Rev. 00B
VESSEL: 300" ID PROCESS CONDENSATE LAG STORAGE VESSEL TAG#: 24590-BOF-MV-DEP-VSL-00005A

Item	Designation	Qty.	Heat No.	Material	Item Description
1	HEAD	2		SA-240-316	F&D HEAD, 300" ID, 100% CR, 6% KR, 1-1/2" SF, 1" MIN THK (FOR TOP HEAD ONLY), 1.124" MIN THK SPHERICAL
					AND, 1" MIN THK KNUCKLE (FOR BOTTOM HEAD ONLY), ALL WELDING BY HARRIS THERMAL
2	SHELL	1		SA-240-316	1" THK, 300"(945 5/8") ID
3	SKIRT	1		SA-240-304	1" THK, 300"(945 5/8") ID
4	SKIRT ACCESS LIP	2		SA-240-316	7/16" THK
5	SKIRT VENT	4		SA-312-304	4", SCH 40S (0.237") PIPE
6	SKIRT ATTACHMENT	1		SA-240-304	1-1/2" X 6" BAR
7					
8					
9					
10	WASH RING	4		SA-312 316 SMLS	2", SCH 40S (0.154") PIPE
11	WASH RING END COVER	8		SA-240-316	7/16" THK
12	WASH RING SUPPORT	12		SA-240-316	3/8" THK X 2" WIDE
13	LIFTING LUG	2		SA-240-304	2" THK
14	LIFTING LUG EYE	4		SA-240-316	1-1/4" THK
15	LIFTING LUG REPAD	2		SA-240-316	1-1/2" THK
16					
17	THERMOWELL	1		SA-479-316	Ø2" ROUND BAR (MACHINED PER DETAIL)
18	T'WELL PIPE	1		SA-312 316 SMLS	1", SCH 160S (0.250") PIPE
19	WEAR PLATE_CENTER	1		SA-240-316	1" THK, 50" OD
20	WEAR PLATE_OUTER	7		SA-240-316	1" THK, 52" OD
21	N06, N08, N09 HEAD	3		SA-240-316	3/4" THK, 6 5/8" OD
22	N06BC, N08BC, N09BC BOTTOM REDUCER	6		SA-403-316	2" X 1" SCH 160S (0.344") CONCENTRIC REDUCER
23	N06BC, N08BC, N09BC BOTTOM PIPE	5		SA-312-316	2" SCH 160S (0.344") PIPE
24	INTERNAL PIPE SLEEVE	A/R		SA-479-316	Ø3-1/2" ROUND BAR X 5" LG, BORED TO 2-1/2" I.D.
25	INTERNAL PIPE SUPPORT	A/R		SA-479-316	4" WIDE X 1/2" THK FLAT BAR
26	BOTTOM PIPE SUPPORT	A/R		SA-479-316	4" WIDE X 3/4" THK FLAT BAR
27	SPARGER AIR NOZZLE REDUCER	36		SA-403-316	2" SCH 160S X 3/4" (0.344") CONC REDUCER
28	NOZZLE N04 CAP	1		SA-403-316	4", SCH 80S (0.337") CAP
29	NOZZLES N28 CAPS	1		SA-403-316	2", SCH 80S (0.218") CAP
30					
31	JACKET	2		SA-240-316	1/2" THK, 310"(975-1/2") ID
32	JACKET CLOSURE	5		SA-240-316	1" THK
33	JACKET HELICAL BAFFLE	2		SA-240-316	1/4" THK
34	JACKET INTERCONNECT	7		SA-312 316 SMLS	4" SCH 80S (0.337") PIPE
35	BOTTOM JACKET	1		SA-240-316	SPHERICALLY DISHED COVER, 1/2" THK, 257" OD, 305" CR
36	BOTTOM JACKET CLOSURE	2		SA-240-316	1-1/4" THK
37	BOTTOM JACKET CONCENTRIC BAFFLE	1		SA-240-316	1/4" THK
38	BOTTOM JACKET WELD ELBOW	1		SA-403 316	4", SCH 80S (0.337") 45° SHORT RADIUS ELBOW
39	CENTER PULSE JET MIXER	1		316	HTTP SERIAL NUMBER 23246-2, SEE 23246-2-D1 FOR DETAILS/B.O.M.
40	OUTER PULSE JET MIXER	7		316	HTTP SERIAL NUMBERS 23246-3 THRU -9, SEE 23246-2-D2 FOR DETAILS/B.O.M.
41	PJM CLUSTER HEAD	1		SA-240-316	ASME CODE FLANGED & DISHED HEAD, 132" ID, 1/2" NOM THK, 1-1/2" S.F.
42	PJM CLUSTER SHELL	14		SA-240-316	3/8" THK
43	PJM CLUSTER BOTTOM PLATE	1		SA-240-316	1/2" THK, 133" DIA
44					
45	NOZZLE CLUSTER SUPPORT	A/R		SA-479-316	2" WIDE X 1/2" THK FLAT BAR
46	NOZZLE CLUSTER LARGE SUPPORT	A/R		SA-240-316	1/2" THK X 8" WIDE
47	PJM CLUSTER VERTICAL PIPE CAP	7		SA-403-316	10" SCH 80S (0.500") CAP
48					
49					
50	NOZZLE N39 SLEEVE	1		SA-312-304	6" SCH 40S (0.280") X 4" LG PIPE
51	HEX PLUG	2		SA-403-316	1/4" NPT
52	SIDE-BOTTOM JACKET INTERCONNECT PIPE SLEEVE	1		SA-312-304	6" SCH 40S (0.280") X 4" LG PIPE
53	NAMEPLATE	1		SA-240-304	1/4" THK
54	NAMEPLATE BRACKET	1		SA-240-316	1/4" THK
55	N29, N30 HEAD	2		SA-240-316	3/4" THK 8" OD
56	NOZZLE CLUSTER SLEEVE	AR		SA-479-316	1/2" X 4" FB
57					
58	NOZZLE N36 BOTTOM SUPPORT	2		SA-479-316	1/2" X 4" FB
59					
60					
61					
62	BOTTOM JACKET INNER SUPPORT	2		SA-240-316	1" THK
63	NOZZLE N40 INSERT PLATE	1		SA-240-316	1-1/2" THK
64					
65					
66	JACKET INTERCONNECT ELBOW	4		SA-403-316	4", SCH 80S(.337") 90° SHORT RAD ELBOW
67	NOZZLE N07, N06A, N08C& N09C SUPPORT SLEEVE	10		SA-312 316 SMLS	2" SCH 160S (0.344") X 5"
68					
69					
70	PJM CLUSTER SUPPORT STRUCTURE VERTICAL PIPE	7		SA-312 316 SMLS	10" SCH 80S (0.500") PIPE
71					
72					
73	HEAD JACKET CONE A	1		SA-240-316	CONE 1" THK X 257" ID X 274" OD X 64° ANGLE
74	HEAD JACKET CONE B	1		SA-240-316	CONE 1" THK X 274" ID X 276" OD X 30° ANGLE
75	BOTTOM HEAD JACKET INTEGRAL PAD	1		SA-240-316	1-1/2" THK
76					
77					
78					
79	PJM UPPER SUPPORT	7		SA-240-316	3/4" THK X 6-3/4" X 16" OD (47-15/16" S.O.)
80	PJM UPPER SUPPORT PIPE	7		SA-312 316 SMLS	16" SCH 80S (0.500") X (6) @ 59" LG & (1) @ 15" LG
81	PJM UPPER SUPPORT REPAD (TO PJM)	7		SA-240-316	3/4" THK X 36" OD (TRIMMED @ TOP & BOTTOM)
82	PJM UPPER SUPPORT INSERT	7		SA-240-316	1-1/2" X 32" OD
83	PJM MID & LOWER SUPPORT PIPE	14		SA-312 316 SMLS	10" SCH 80 (.593" WALL) X 48" LG
84	PJM MID & LOWER SUPPORT PIPE REDUCER	14		SA-403-316	16" X 10" SCH 80S (0.500") CONCENTRIC REDUCER
85	PJM MID & LOWER SUPPORT PIPE STUB	14		SA-240-316	1/2" THK X 16" OD (48-1/16" S.O.) X 4" LG
86	PJM MID SUPPORT REPAD	7		SA-240-316	1/2" THK X 36" OD
87	PJM LOWER SUPPORT REPAD	7		SA-240-316	5/8" THK X 36" OD (TRIMMED @ TOP & BOTTOM)
88	PJM UPPER SUPPORT	1		SA-240-316	1/2" THK X 16" OD (48-1/16" S.O.) X 44" LG
89					
90	(N02) INSERT	1		SA-240-316	1-1/2" THK X 16" X 20"
91					
92					
93	PJM VERTICAL SUPPORT PIPE REPAD	7		SA-240-316	3/4" THK X 20" OD
94					
95	REINFORCEMENT STRUCTURE REPAD	7		SA-240-316	1" THK X 18" X 39-3/8" S.O., ROLL TO 300" OD
96	REINFORCEMENT STRUCTURE GUSSET	7		SA-240-316	1-1/2" THK
97	REINFORCEMENT STRUCTURE FLG	7		SA-240-316	1-1/2" THK X 6" X 35-9/16" S.O., ROLL TO 22-13/16" IR
98	REINFORCEMENT STRUCTURE SIDE FLG	14		SA-240-316	1-1/2" THK X 12" X 4"
99					
100	DONUT SUPPORT RING	1		SA-312 316 SMLS	6" SCH 80S (0.432") PIPE RING ROLLED TO 164" CENTER DIAMETER
101	DONUT SUPPORT RING LATERALS	7		SA-312 316 SMLS	4" SCH 80S (0.337") X 29" LG
102	DONUT RING OUTRIGGER PIPE	5		SA-312 316 SMLS	4" SCH 80S (0.337") X 48" LG
103	OUTRIGGER PIPE CAP	5		SA-403-316	4" SCH 80S (0.337") PIPE CAP
104					
105	PJM UPPER SUPPORT PIPE SLEEVE	7		SA-479-316	Ø3-1/2" ROUND BAR X 20" LG, BORED TO 2-1/2" ID
106	PJM MID & LOWER SUPPORT PIPE SLEEVE	14		SA-479-316	Ø3-1/2" ROUND BAR X 14-3/4" LG, BORED TO 2-1/2" ID
107					
108					
109					
110					
111					
112	SKIRT BACKING BAR	AR		SA-240-316	1/4" THK X 2-1/2" FB RING ROLLED EZ WAY TO 299-7/8" OD
113	SKIRT BACKING BAR	AR		SA-479-316	1/4" THK X 2-1/2" FB RING ROLLED EZ WAY TO 299-7/8" OD
114	PJM LATERAL BACKING BAR	21		SA-240-316	1/4" X 1-1/2"
115	CLUSTER BACKING BAR	AR		SA-240-316	1/4" THK X 1"
116					
117	CAMERA PORT CONE	2		SA-240 316	3/8" THK X 8-5/8" OD X 45° X 6" HIGH CONE
118					
119					
120	JACKING LUG BASE PL	4		SA-240 316	1" THK
121	JACKING LUG VERTICAL GUSSET	8		SA-240 316	1" THK
122	JACKING LUG BRIDGE GUSSET	8		SA-240 316	1" THK
123	JACKING LUG TEMPORARY BASE PL. DOUBLER	4		SA-240 316	1" THK
124					
125					
200	SKIRT EXTENSION TOP RING	1		SA-240 304	1" THK X 304" OD X 288" ID
201	SKIRT EXTENSION	1		SA-240 304	1" THK, 300" (945 5/8") ID X 78-1/2" LG
202					
203	SKIRT EXTENSION ACCESS LIP	2		SA-240 304	1/2" THK X 24" ID (77" S.O.) X 4" LG
204	SKIRT VENT	8		SA-312 304	4" SCH 40 (.237" WALL) X 6-1/2" LG
205	GROUNDING LUG	4		SA-240 304	1/4" THK X 3" X 5"
206	VACUUM RING	1		SA-240 304	1" THK X 326" OD X 302-1/8" ID
207					
208					
209	NOZ (N01) EXTENSION	1		SA-240 316	1/2" THK X 24" OD X 24" ID X 24" LG CONE
210	NOZ (N01) BLIND	1		SA-182 316	24" ANSI 150# RF BLIND
211	NOZ (N01) GASKET	1		EPDM	1/8" THK RING GASKET FOR 24" ANSI 150# PIPE FLG
212	NOZ (N01) STUD	20		SA-193-B8M	1-1/4"-8NC X 7-1/4" LG
213	NOZ (N01) NUT	40		SA-194-8M	1-1/4"-8NC HEAVY HEX
214	NOZ (N01) DAVIT MAST	1		SA-312 304	2-1/2" SCH 40 (.203" WALL) X 37-3/8" LG, MITER ONE END @ 45 DEG
215	NOZ N01 DAVIT ARM	1		SA-312 304	2-1/2" SCH 40 (.203" WALL) X 22-3/16" LG, MITER ONE END @ 45 DEG
216	NOZ N01 DAVIT CAP	1		SA-403 304	2-1/2" SCH 40 (.203" WALL) B.W. PIPE CAP
217	NOZ N01 DAVIT GUSSET	1		SA-240 304	1/2" THK X 7" X 7"
218	NOZ N01 DAVIT SOCKET	1		SA-312 304	3" SCH 40 (.216" WALL) X 10" LG
219	NOZ N01 DAVIT COLLAR	1		SA-312 304	3" SCH 40 (.216" WALL) X 3/4" LG
220	NOZ N01 DAVIT ATTACHMENT PL	1		SA-240 304	3/4" THK X 8" X 5"
221	NOZ N01 DAVIT GREASE FITTING	1		SS 304	1/8" MALE NPT GREASE ZIRC
222	NOZ N01 DAVIT COVER LOOP	1		SA-479 304	1/2" OD ROUND BAR
223	NOZ N01 DAVIT EYEBOLT	1		SS 304	3/4" OD EYEBOLT w/10" LG SHANK, NUT & WASHER
224	DAVIT SHACKLE	1		SS 304	5/8" SHACKLE
225	NOZ N01 REPAD	1		SA-240 316	1/2" THK X 5" WIDE
226	NOZ CAP	3		SA-403 316	8" SCH 80S (0.500" WALL) PIPE CAP
227	NOZ CAP	6		SA-403 316	1" SCH 160S (0.25" WALL) PIPE CAP
228	NOZ CAP	10		SA-403 316	2" SCH 160S (0.343" WALL) PIPE CAP
229	NOZ CAP	5		SA-403 316	3" SCH 80S (0.300" WALL) PIPE CAP
230	NOZ CAP	4		SA-403 316	4" SCH 80S (0.337" WALL) PIPE CAP
231					
232	NOZ PLUG	36		SA-479 316	1" OD ROUND BAR X 1-1/4" LG
233					
234					
235	EDUCTOR INLET PIPING INTERNAL ELBOW	4		SA-403 316	4" SCH 80S (0.337" WALL) 90 DEG SHORT RADIUS B.W. ELBOW
236	EDUCTOR INLET PIPING INTERNAL TEE	2		SA-403 316	4" SCH 80S (0.337" WALL) X 3" SCH 80S (0.300" WALL) B.W. REDUCING TEE
237	EDUCTOR INLET INTERNAL PIPE	4		SA-312 316 SMLS	4" SCH 80S (0.337" WALL) X (1) @ 32-1/4", (1) @ 35-15/16", @ 40-1/2" & (1) @ 11-5/8" LG
238	EDUCTOR INLET PIPING INTERNAL ELBOW	1		SA-403 316	3" SCH 80S (0.300" WALL) 45 DEG DEG SHORT RADIUS B.W. ELBOW (TRIM TO 26 DEG)
239	EDUCTOR INLET INTERNAL PIPE	2		SA-312 316 SMLS	3" SCH 80S (0.300" WALL) X 3" LG, THREAD ONE END 3" NPT
240	EDUCTOR INLET INTERNAL CPLG	1		SA-182 316	3/4" 3000# THREADOLET TO SADDLE ON 4" IPS
241	EDUCTOR INLET INTERNAL CPLG	1		SA-182 316	3/4" 3000# FULL CPLG
242	EDUCTOR INLET PIPING CAP	2		SA-403 316	4" SCH 80S (0.337" WALL) PIPE CAP
243	EDUCTOR	2		SS316	3" JACOBY TARBOX TB-3926-T11FNPT
244	EDUCTOR	2		SS316	3/4" JACOBY TARBOX TB-3923-T11
245	EDUCTOR SUPPORT	4		SA-240 316	1/2" THK
246					
247					
248	NOZ N08C BOTTOM PIPE	1		SA-312 316	2" SCH 160S (0.344") PIPE
249					
250					
251					
252	NOZ (N84) EXTENSION PIPE	2		SA-312 316 SMLS	10" SCH 80S X (1) @ 48" & (1) @ 144" LG
253	NOZ (N84) ELBOW	1		SA-403 316	10" SCH 80S (0.500" WALL) 90 DEG LONG RADIUS B.W. ELBOW
254	NOZ (N84) SKIRT PENETRATION	1		SA-312 304	18" SCH 40S (0.375" WALL) X 4" LG
255	NOZ (N84) GUIDES	4		SA-240 304	1/4" THK X 4" X (3) @ 3-3/16" X (1) @ 3-1/4"
256	VORTEX BREAKER	3		SA-240 316	3/8" THK
257					
258	NOZ (N86) REPAD	1		SA-240 316	5/16" THK X 3" WIDE
259					
260	NOZ N05 REPAD	1		SA-240 316	5/8" THK X 4" WIDE
261	NOZ N05 EXTENSION	1		SA-312 316 SMLS	10" SCH 80 (.593" WALL) X 14" LG
262					
263					
264					
265					
266					
267					
268					
269					
270					
271					
272					
273					
274					
275					
276					
277					
278					
279					
280					
281					
282					
283					
284					
285					
286					
287					
288					
289					
290					
291					
292					
293					
294					

NOTES

1. ALL FLANGE BOLT HOLES TO STRADDLE MAJOR VESSEL CENTERLINES.
2. EACH SECTION OF NOZZLE REPADS AND ALL REPADS CROSSING A WELD SEAM REQUIRE AN 1/8" NPT WEEP HOLE w/PLUG.
3. CONDUCT 15psi AIR TEST FOR ALL NOZZLE REPADS AND ALL REPADS CROSSING A WELD SEAM.
4. ALL WELDS TO BE CONTINUOUS UNLESS OTHERWISE SPECIFIED.
5. CLEAN HEAT TINT AREA WITH FLAPPER WHEEL.
6. ALL WELDS TO BE CLEANED INSIDE AND OUTSIDE WITH SS POWER WIRE BRUSH.
7. APPLY "NEVER-SEEZ" OR EQUAL TO ALL EXTERNAL FLANGE FASTENERS & DAVIT EYEBOLTS.
8. IMMEDIATELY PRIOR TO SHIPMENT CLEAN ALL INNER SURFACES OF DIRT, PAINT, SCALE, WELD SMUT, OXIDE AND GREASE.
9. COVER AND PROTECT ALL NOZZLES AND OPENINGS w/HARDBOARD OR EQUAL FOR SHIPMENT.
10. OVERPRESSURE PROTECTION SHALL BE PROVIDED BY THE CUSTOMER PRIOR TO PLACING VESSEL IN SERVICE.

DRAWING REFERENCE LIST

LIFTING DETAILS----------27203-L

SHIPPING DETAILS----------27203-S

WELD MAP----------27203-W

LADDER, PLATFORM & PINING CLIPS DETAILS----------27203-C

INSULATION SUPPORT DETAILS----------27203-N

LADDER & PLATFORM DETAILS----------BIG C INDUSTRIES DWG (TO FOLLOW)

SPECIAL NOTES

1. FOR 316 TO 316 USE PROCEDURE GM08-F6O OR GT08-F6M OR FC08-F6DS OR SA08-F6 WITH ER316L FILLER.
   FOR 316 TO N06022 USE PROCEDURE GM4408-F44 WITH ERNiCrMo-3 FILLER.
   FOR 304 TO 304 USE PROCEDURE GM08-F6O OR GT08-F6M OR FC08-F6DS OR SA08-F6 WITH ER308L FILLER.
   FOR 304 TO 316 USE PROCEDURE GM08-F6O OR GT08-F6M OR FC08-F6DS OR SA08-F6 WITH ER316L FILLER.
2. VESSEL WEIGHTS
   VESSEL EMPTY----------319,300 LBS.
   PRE-OPERATING----------332,200 LBS.
   FULL OF WATER----------1,380,900 LBS.
   OPERATING----------1,359,800 LBS.
3. NOT USED.
4. ALL WELDING SHALL BE PROTECTED FROM WIND, RAIN AND OTHER HARMFUL WEATHER CONDITIONS WHICH MAY AFFECT WELD QUALITY.
5. ULTRASONIC TESTING (UT) MAY BE USED IN LIEU OF RT WHEN APPROVED VIA SDDR.
6. PRIOR TO WELDING AREAS OF THE SHELL HEADS AND SKIRT WHERE LIFTING AND TAILING LUGS WILL BE ATTACHED, SHALL BE ULTRASONICALLY EXAMINED OVER 100% OF THE AREA TO BE WELDED AND A MARGIN THAT EXTENDS 5" BEYOND THE WELDS IN ALL DIRECTION.
7. 100% PENETRANT TESTING (PT) IS REQUIRED FOR WELD ATTACHING LIFTING & TAILING LUGS, AND PIPE SUPPORTS TO VESSELS, SHELL, HEADS AND SKIRT.
8. PWI ALL PRESSURE RETAINING MATERIALS & WELDS PER BECHTEL SPEC. 24590-BOF-3PS-MVSC-T0003 EXHIBIT 1 (24590-WTP-3PS-G000-T0002) AND HTTP POA-11-HOP-09-310.
9. RT 10% OF THE LENGTH OF EACH WELDER'S PRODUCTION OF VESSEL MAIN SEAMS BUTT WELDS WITH THE MINIMUM EXTENT BEING ALL "T" JOINTS, AT LEAST 10% OF INTERNAL PIPING BUTT WELDS FOR THE FULL CIRCUMFERENCE, AT LEAST 10% OF THE NOZZLE-TO-SHELL OR HEAD WELDS LOCATED IN THE PRIMARY CONTAINMENT MADE BY EACH WELDER OVER 100% OF ITS CIRCUMFERENCE AND 10% LENGTH OF REMAINING LONG SEAMS PER BECHTEL SPEC. 24590-BOF-3PS-MVSC-T0003 EXHIBIT 6 (24590-WTP-3PS-MV00-T0001) PARAGRAPH 6.4.2.
10. ALL STAINLESS MATERIAL TO HAVE A MAXIMUM CARBON CONTENT OF 0.030%
11. ENSURE ALL INTERNALS & INTERNAL PIPING ARE FREE FROM OBSTRUCTIONS.
12. BRONZE, COPPER, LEAD, ZINC, TIN, ANTIMONY, CADMIUM, THEIR ALLOYS OR MATERIALS CONTAINING SUCH METALS AS THEIR BASIC CONSTITUENTS, OR MOLYBDENUM AND HALOGENS SHALL NOT BE USED IN DIRECT CONTACT WITH S.S.
13. CONTACT MATERIALS INCLUDING MARKING MATERIALS, TEMPERATURE INDICATING CRAYONS, ADHESIVE BACKED AND PRESSURE SENSITIVE TAPE, AND BARRIER AND WRAP MATERIALS MAY BE USED ONLY UNDER THE FOLLOWING LIMITS:
    a. THE TOTAL HALOGEN CONTENT SHALL NOT EXCEED 200 PARTS PER MILLION (PPM).
    b. THE TOTAL SULFUR CONTENT SHALL NOT EXCEED 400 PPM.
    c. NO INTENTIONALLY ADDED LOW MELTING POINT METALS SUCH AS LEAD, ZINC, COPPER, ANTIMONY AND MERCURY.
14. ANY MARKING METAL AND PACKING TAPE USED ON S.S. ARE REQUIRED TO BE MADE FROM LOW CHLORIDE (LESS THAN 200 PPM) AND LOW SULFUR (LESS THAN 400 PPM) TYPE MATERIAL. FABRICATOR SHALL PROVIDE A CHEMICAL ANALYSIS REPORT OF THE MARKER/TAPE FOR EACH LOT OR TYPICAL PRODUCT SAMPLE.
15. CLEANING MATERIALS MAY BE NON-HALOGENATED SOLVENTS OR POTABLE WATER CONTAINING NO MORE THAN 50 PPM CHLORIDE.
16. CONTACT MATERIALS SHALL BE CONTROLLED AND DOCUMENTED IN ACCORDANCE WITH THE SELLER'S INSPECTION AND TEST PLAN AS APPROVED BY THE BUYER.
17. AUSTENITIC S.S. (P-No. 8) WELDING MATERIALS FOR PRESSURE BOUNDARY & LOAD-BEARING WELDS SHALL CONTAIN A MINIMUM DELTA FERRITE CONTENT OF 5% PER (24590-WTP-3PS-MVB2-T0001) PARAGRAPH 6.1.
18. HYDRO WATER TO CONTAIN NO MORE THAN 50 PPM CHLORIDE.
19. ALL PRESSURE RETAINING WELDS TO BE 2 PASS MINIMUM.
20. NOTED UNSIZED WELDS ARE NON-CODE & NON-STRUCTURAL WELDS & ARE MINIMUM SEAL WELDS.
21. JACKET NOT INCLUDED IN DESIGN AND IS NOT PART ASME CODE STAMPED. ABANDONED IN-PLACE COOLING JACKET TO BE UNUSED AND VENTED TO ATMOSPHERE.
22. SEE "PACKAGING, HANDLING & STORAGE REQUIREMENTS" SPEC. 24590-WTP-3PS-G000-T0003 FOR SHIPPING REQUIREMENTS.
23. SEE LIFTING PROCEDURE FOR SHIPPING & LIFTING & TIE DOWN INFORMATION.

NOTE:
ALL BILL OF MATERIAL ITEMS #200 AND HIGHER ARE NEW ITEMS

DESIGN DATA

Code	ASME SECTION VIII, DIVISION 1, 2001, 2003 ADDENDA
Design Conditions	Shellside
Design Pressure	15 PSIG & FV
Design Temperature	155 °F
MDMT	-23 °F
Hydrotest	20 PSIG
Corrosion Allowance	0.04"
Other NDE	SEE SPECIAL NOTES 5-8
Radiography	SPOT (UW11(b)); SEE SPECIAL NOTE 9
Insulation:	3" THK, BY OTHERS
Gasket Material:	1/8" THK EPDM
Fasteners:	SA193 B8M STUDS & SA194 8M NUTS

Please note that source, special nuclear, and byproduct materials, as defined in the Atomic Energy Act of 1954 (AEA) are regulated at the U. S. Department of Energy (DOE) facilities exclusively by DOE acting pursuant to its AEA authority. DOE asserts that pursuant to AEA, it has sole and exclusive responsibility and authority to regulate source, special nuclear, and byproduct materials at DOE-owned nuclear facilities. Information contained herein on radionuclides is provided for process description purposes only.

REVISIONS

Rev.	Date	Drawn By	Checked By	Description
1	3/2/18	DKM	JPM	DELETED ITEMS 30,64,72 & 110; ADDED ITEM 261; UPDATED SPC'L NOTE 3

Do Not Scale Drawing

Shop Tolerance
Fractional - ±1/8"
Angular - 1°
Circumference - ±1/16"
Mach. Surface - ±1/64"

Drawn	DKM
Checked	JPM
Approved	ERG
Quote No.	-
Job No.	27203
P.O. No.	POA-MVSC-00007

HARRIS Thermal Transfer Products
615 S. Springbrook Rd., Newberg, OR 97132
Phone (503)538-1260 / Fax (503)538-4281

Title: 300" ID PROCESS CONDENSATE LAG STORAGE VESSEL
Customer: BECHTEL NATIONAL INC.
Destination: RICHLAND, WASHINGTON

Date	Size	Drawing No.	Rev.
10/20/17	D	27203	1

Scale: NA Sheet 1 Of 13

BECHTEL PROJECT: HANFORD TANK WASTE TREATMENT AND IMMOBILIZATION PLANT (WTP PROJECT) 24590-CM-POA-MVSC-00007-02-00002 Rev. 00C
VESSEL: 300" ID PROCESS CONDENSATE LAG STORAGE VESSEL TAG#: 24590-BOF-MV-DEP-VSL-00005B

CONNECTION SCHEDULE

ITEM	SERVICE	SIZE	RATING	CLASS	FLANGE MATERIAL	NECK MATERIAL	NECK SCH	NECK WALL	NECK HEAT NO.	CONNECTING PIPE/ TUBE SIZE	Z * * DIMENSION	LAP RING (NONE THIS VESSEL) MATERIAL	LAP RING t	LAP RING OD	LAP RING HEAT NO.	REPAD MATERIAL	REPAD SIZE	REPAD HEAT NO.	WELD DET	WELD DWG	WELD A	WELD SIZE B	WELD SIZE C	WELD SIZE D
N01	MANWAY	24" ID	---	STUB	---	SA-240-316	---	1/2"		BLIND (ITEM 210)	430"	---	---	---		SA-240 316	1/2"		17	D5		3/8	7/16	3/8
N02	NOT USED/OVERFLOW	8"	---	STUB	---	SA-312 TP316 SMLS	80S	.500"		CAPPED (ITEM 226)	342"	---	---	---		---	---		13	D5		3/8	-	
N04	NOT USED/SPARE	4"	---	STUB	---	SA-312 TP316 SMLS	80S	.337"		CAPPED (ITEM 28)	414"	---	---	---		---	---		4	D5		3/8	3/8	
N05	VENT	10"	---	STUB	---	SA-312 TP316 SMLS	80S	.500"		10" - 10S	430"	---	---	---		SA-240 316	5/8"		5	D5		3/8	-	1/2
N06	SPARE INSTRUMENTATION	6"	---	STUB	---	SA-312 TP316 SMLS	80S	.432"		CAPPED (ITEM 21)	402"	---	---	---		---	---		30	D9		3/8	7/16	
N06A	SPARE BALANCE	1"	---	STUB	---	SA-312 TP316 SMLS	160S	.250"		CAPPED (ITEM 227)	405"	---	---	---		---	---		30	D9		1/4	5/16	
N06B	SPARE DENSITY	1"	---	STUB	---	SA-312 TP316 SMLS	160S	.250"		CAPPED (ITEM 227)	406"	---	---	---		---	---		30	D9		1/4	5/16	
N06C	SPARE LEVEL	1"	---	STUB	---	SA-312 TP316 SMLS	160S	.250"		CAPPED (ITEM 227)	407"	---	---	---		---	---		30	D9		1/4	5/16	
N07	SPARE TEMPERATURE	2" OD X 1"	---	STUB	---	SA-479 316	---	.59"		1 PLUGGED (ITEM 232)	396"	---	---	---		---	---		15	D5		3/8	7/16	
N08	INSTRUMENTATION	6"	---	STUB	---	SA-312 TP316 SMLS	80S	.432"		CAPPED (ITEM 21)	402"	---	---	---		---	---		30	D9		3/8	7/16	
N08A	BALANCE	1"	---	STUB	---	SA-312 TP316 SMLS	160S	.250"		1" - 40S	405"	---	---	---		---	---		30	D9		1/4	5/16	
N08B	DENSITY	1"	---	STUB	---	SA-312 TP316 SMLS	160S	.250"		1" - 40S	406"	---	---	---		---	---		30	D9		1/4	5/16	
N08C	LEVEL	1"	---	STUB	---	SA-312 TP316 SMLS	160S	.250"		1" - 40S	407"	---	---	---		---	---		30	D9		1/4	5/16	
N09	SPARE INSTRUMENTATION	6"	---	STUB	---	SA-312 TP316 SMLS	80S	.432"		CAPPED (ITEM 21)	402"	---	---	---		---	---		30	D9		3/8	7/16	
N09A	SPARE BALANCE	1"	---	STUB	---	SA-312 TP316 SMLS	160S	.250"		CAPPED (ITEM 227)	405"	---	---	---		---	---		30	D9		1/4	5/16	
N09B	SPARE DENSITY	1"	---	STUB	---	SA-312 TP316 SMLS	160S	.250"		CAPPED (ITEM 227)	406"	---	---	---		---	---		30	D9		1/4	5/16	
N09C	SPARE LEVEL	1"	---	STUB	---	SA-312 TP316 SMLS	160S	.250"		CAPPED (ITEM 227)	407"	---	---	---		---	---		30	D9		1/4	5/16	
N10	INLET TO WASH RING	2"	---	STUB	---	SA-312 TP316 SMLS	160S	.343"		2" - 40S	386"	---	---	---		---	---		14	D5,D6		5/16	3/8	
N11	INLET TO WASH RING	2"	---	STUB	---	SA-312 TP316 SMLS	160S	.343"		2" - 40S	386"	---	---	---		---	---		14	D5,D6		5/16	3/8	
N12	INLET TO WASH RING	2"	---	STUB	---	SA-312 TP316 SMLS	160S	.343"		2" - 40S	386"	---	---	---		---	---		14	D5,D6		5/16	3/8	
N13	INLET TO WASH RING	2"	---	STUB	---	SA-312 TP316 SMLS	160S	.343"		2" - 40S	386"	---	---	---		---	---		14	D5,D6		5/16	3/8	
N14	NOT USED/AIR/VACUUM TO HLP-PJM-00068	2"	---	STUB	---	SA-312 TP316 SMLS	160S	.343"		CAPPED (ITEM 228)	414"	---	---	---		---	---		14	D5,D10		5/16	3/8	
N15	NOT USED/AIR/VACUUM TO HLP-PJM-00069	2"	---	STUB	---	SA-312 TP316 SMLS	160S	.343"		CAPPED (ITEM 228)	407"	---	---	---		---	---		14	D5,D10		5/16	3/8	
N16	NOT USED/AIR/VACUUM TO HLP-PJM-00070	2"	---	STUB	---	SA-312 TP316 SMLS	160S	.343"		CAPPED (ITEM 228)	407"	---	---	---		---	---		14	D5,D10		5/16	3/8	
N17	NOT USED/AIR/VACUUM TO HLP-PJM-00071	2"	---	STUB	---	SA-312 TP316 SMLS	160S	.343"		CAPPED (ITEM 228)	407"	---	---	---		---	---		14	D5,D10		5/16	3/8	
N18	NOT USED/AIR/VACUUM TO HLP-PJM-00072	2"	---	STUB	---	SA-312 TP316 SMLS	160S	.343"		CAPPED (ITEM 228)	407"	---	---	---		---	---		14	D5,D10		5/16	3/8	
N19	NOT USED/AIR/VACUUM TO HLP-PJM-00073	2"	---	STUB	---	SA-312 TP316 SMLS	160S	.343"		CAPPED (ITEM 228)	407"	---	---	---		---	---		14	D5,D10		5/16	3/8	
N20	NOT USED/AIR/VACUUM TO HLP-PJM-00074	2"	---	STUB	---	SA-312 TP316 SMLS	160S	.343"		CAPPED (ITEM 228)	407"	---	---	---		---	---		14	D5,D10		5/16	3/8	
N21	NOT USED/AIR/VACUUM TO HLP-PJM-00075	2"	---	STUB	---	SA-312 TP316 SMLS	160S	.343"		CAPPED (ITEM 228)	407"	---	---	---		---	---		14	D5,D10		5/16	3/8	
N25	NOT USED/SPARE	2"	---	STUB	---	SA-312 TP316 SMLS	160S	.343"		CAPPED (ITEM 228)	414"	---	---	---		---	---		4	D5		5/16	3/8	
N27	NOT USED/INLET	3"	---	STUB	---	SA-312 TP316 SMLS	80S	.300"		CAPPED (ITEM 229)	392"	---	---	---		---	---		4	D5		5/16	3/8	
N28	NOT USED/SPARE	2"	---	STUB	---	SA-312 TP316 SMLS	160S	.343"		CAPPED (ITEM 29)	400"	---	---	---		---	---		4	D5		5/16	3/8	
N29	NOT USED/INLET	6"	---	STUB	---	SA-312 TP316 SMLS	80S	.432"		CAPPED (ITEM 55)	398"	---	---	---		---	---		9	D5		3/8	7/16	
N29a	NOT USED/INLET	4"	---	STUB	---	SB-622 N06022 SMLS	80S	.337"		CAPPED (ITEM 230)	402"	---	---	---		---	---		9	D5		5/16	3/8	
N30	NOT USED/INLET	6"	---	STUB	---	SA-312 TP316 SMLS	80S	.432"		CAPPED (ITEM 55)	388"	---	---	---		---	---		9	D5		3/8	7/16	
N30a	NOT USED/INLET	4"	---	STUB	---	SB-622 N06022 SMLS	80S	.337"		CAPPED (ITEM 230)	392"	---	---	---		---	---		9	D5		5/16	3/8	
N31	PROCESS CONDENSATE INLET	3"	---	STUB	---	SA-312 TP316 SMLS	80S	.300"		3" - 40S	404"	---	---	---		---	---		4	D5		5/16	3/8	
N32	NOT USED/INLET	3"	---	STUB	---	SA-312 TP316 SMLS	80S	.300"		CAPPED (ITEM 229)	386"	---	---	---		---	---		4	D5		5/16	3/8	
N33	NOT USED/INLET	2"	---	STUB	---	SA-312 TP316 SMLS	160S	.343"		CAPPED (ITEM 228)	396"	---	---	---		---	---		4	D5		5/16	3/8	
N34	NOT USED/INLET	3"	---	STUB	---	SA-312 TP316 SMLS	80S	.300"		CAPPED (ITEM 229)	392"	---	---	---		---	---		4	D5		5/16	3/8	
N36	NOT USED/PUMP SUCTION	4"	---	STUB	---	SA-312 TP316 SMLS	80S	.337"		CAPPED (ITEM 230)	36 1/2"	---	---	---		---	---		DD	D10		3/8	7/16	
N37	NOT USED/INLET	3"	---	STUB	---	SA-312 TP316 SMLS	80S	.300"		CAPPED (ITEM 229)	392"	---	---	---		---	---		4	D5		5/16	3/8	
N38	NOT USED/INLET WITH DIP PIPE	3"	---	STUB	---	SA-312 TP316 SMLS	80S	.300"		CAPPED (ITEM 229)	414"	---	---	---		---	---		11	D5		5/16	3/8	
N39	NOT USED/INLET TO JACKET																							
N40	NOT USED/OUTLET FROM JACKET	4"	---	STUB	---	SA-312 TP316 SMLS	80S	.337"		CAPPED (ITEM 230)	65"	---	---	---		---	---		Ae	D13		SEAL	SEAL	
N41	INTAKE AIR	3"	---	STUB	---	SA-312 TP316 SMLS	80S	.300"		3" - 40S	400"	---	---	---		---	---		4	D5		5/16	3/8	
N42	NOT USED																							
N43	NOT USED/SPARGE AIR	2"	---	STUB*	---	SA-312 TP316 SMLS	160S	.343"		1 PLUGGED (ITEM 232)	414"	---	---	---		---	---		35	D10		5/16	3/8	
N44	NOT USED/SPARGE AIR	2"	---	STUB*	---	SA-312 TP316 SMLS	160S	.343"		PLUGGED (ITEM 232)	410"	---	---	---		---	---		35	D10		5/16	3/8	
N45	NOT USED/SPARGE AIR	2"	---	STUB*	---	SA-312 TP316 SMLS	160S	.343"		PLUGGED (ITEM 232)	410"	---	---	---		---	---		35	D10		5/16	3/8	
N46	NOT USED/SPARGE AIR	2"	---	STUB*	---	SA-312 TP316 SMLS	160S	.343"		PLUGGED (ITEM 232)	410"	---	---	---		---	---		35	D10		5/16	3/8	
N47	NOT USED/SPARGE AIR	2"	---	STUB*	---	SA-312 TP316 SMLS	160S	.343"		PLUGGED (ITEM 232)	410"	---	---	---		---	---		35	D10		5/16	3/8	
N48	NOT USED/SPARGE AIR	2"	---	STUB*	---	SA-312 TP316 SMLS	160S	.343"		PLUGGED (ITEM 232)	410"	---	---	---		---	---		35	D10		5/16	3/8	
N49	NOT USED/SPARGE AIR	2"	---	STUB*	---	SA-312 TP316 SMLS	160S	.343"		PLUGGED (ITEM 232)	410"	---	---	---		---	---		35	D10		5/16	3/8	
N50	NOT USED/SPARGE AIR	2"	---	STUB*	---	SA-312 TP316 SMLS	160S	.343"		PLUGGED (ITEM 232)	410"	---	---	---		---	---		35	D10		5/16	3/8	
N51	SECONDARY STEAM BLOWDOWN INLET	2"	---	STUB*	---	SA-312 TP316 SMLS	160S	.343"		2" - 40S	400"	---	---	---		---	---		1 39	D10		5/16	3/8	
N52	NOT USED/SPARGE AIR	2"	---	STUB*	---	SA-312 TP316 SMLS	160S	.343"		1 PLUGGED (ITEM 232)	400"	---	---	---		---	---		35	D10		5/16	3/8	
N53	NOT USED/SPARGE AIR	2"	---	STUB*	---	SA-312 TP316 SMLS	160S	.343"		PLUGGED (ITEM 232)	400"	---	---	---		---	---		35	D10		5/16	3/8	
N54	NOT USED/SPARGE AIR	2"	---	STUB*	---	SA-312 TP316 SMLS	160S	.343"		PLUGGED (ITEM 232)	400"	---	---	---		---	---		35	D10		5/16	3/8	
N55	NOT USED/SPARGE AIR	2"	---	STUB*	---	SA-312 TP316 SMLS	160S	.343"		PLUGGED (ITEM 232)	400"	---	---	---		---	---		35	D10		5/16	3/8	
N56	NOT USED/SPARGE AIR	2"	---	STUB*	---	SA-312 TP316 SMLS	160S	.343"		PLUGGED (ITEM 232)	400"	---	---	---		---	---		35	D10		5/16	3/8	
N57	NOT USED/SPARGE AIR	2"	---	STUB*	---	SA-312 TP316 SMLS	160S	.343"		PLUGGED (ITEM 232)	400"	---	---	---		---	---		35	D10		5/16	3/8	
N58	NOT USED/SPARGE AIR	2"	---	STUB*	---	SA-312 TP316 SMLS	160S	.343"		PLUGGED (ITEM 232)	396"	---	---	---		---	---		35	D10		5/16	3/8	
N59	NOT USED/SPARGE AIR	2"	---	STUB*	---	SA-312 TP316 SMLS	160S	.343"		PLUGGED (ITEM 232)	396"	---	---	---		---	---		35	D10		5/16	3/8	
N60	NOT USED/SPARGE AIR	2"	---	STUB*	---	SA-312 TP316 SMLS	160S	.343"		PLUGGED (ITEM 232)	396"	---	---	---		---	---		35	D10		5/16	3/8	
N61	NOT USED/SPARGE AIR	2"	---	STUB*	---	SA-312 TP316 SMLS	160S	.343"		PLUGGED (ITEM 232)	396"	---	---	---		---	---		35	D10		5/16	3/8	
N62	NOT USED/SPARGE AIR	2"	---	STUB*	---	SA-312 TP316 SMLS	160S	.343"		PLUGGED (ITEM 232)	396"	---	---	---		---	---		35	D10		5/16	3/8	
N63	NOT USED/SPARGE AIR	2"	---	STUB*	---	SA-312 TP316 SMLS	160S	.343"		PLUGGED (ITEM 232)	396"	---	---	---		---	---		35	D10		5/16	3/8	
N64	NOT USED/SPARGE AIR	2"	---	STUB*	---	SA-312 TP316 SMLS	160S	.343"		PLUGGED (ITEM 232)	396"	---	---	---		---	---		35	D10		5/16	3/8	
N65	NOT USED/SPARGE AIR	2"	---	STUB*	---	SA-312 TP316 SMLS	160S	.343"		PLUGGED (ITEM 232)	383"	---	---	---		---	---		35	D10		5/16	3/8	
N66	NOT USED/SPARGE AIR	2"	---	STUB*	---	SA-312 TP316 SMLS	160S	.343"		PLUGGED (ITEM 232)	383"	---	---	---		---	---		35	D10		5/16	3/8	
N67	NOT USED/SPARGE AIR	2"	---	STUB*	---	SA-312 TP316 SMLS	160S	.343"		PLUGGED (ITEM 232)	383"	---	---	---		---	---		35	D10		5/16	3/8	
N68	NOT USED/SPARGE AIR	2"	---	STUB*	---	SA-312 TP316 SMLS	160S	.343"		PLUGGED (ITEM 232)	383"	---	---	---		---	---		35	D10		5/16	3/8	
N69	NOT USED/SPARGE AIR	2"	---	STUB*	---	SA-312 TP316 SMLS	160S	.343"		PLUGGED (ITEM 232)	383"	---	---	---		---	---		35	D10		5/16	3/8	
N70	NOT USED/SPARGE AIR	2"	---	STUB*	---	SA-312 TP316 SMLS	160S	.343"		PLUGGED (ITEM 232)	383"	---	---	---		---	---		35	D10		5/16	3/8	
N71	NOT USED/SPARGE AIR	2"	---	STUB*	---	SA-312 TP316 SMLS	160S	.343"		PLUGGED (ITEM 232)	383"	---	---	---		---	---		35	D10		5/16	3/8	
N72	NOT USED/SPARGE AIR	2"	---	STUB*	---	SA-312 TP316 SMLS	160S	.343"		PLUGGED (ITEM 232)	383"	---	---	---		---	---		35	D10		5/16	3/8	
N73	NOT USED/SPARGE AIR	2"	---	STUB*	---	SA-312 TP316 SMLS	160S	.343"		PLUGGED (ITEM 232)	383"	---	---	---		---	---		35	D10		5/16	3/8	
N74	NOT USED/SPARGE AIR	2"	---	STUB*	---	SA-312 TP316 SMLS	160S	.343"		PLUGGED (ITEM 232)	383"	---	---	---		---	---		35	D10		5/16	3/8	
N75	NOT USED/SPARGE AIR	2"	---	STUB*	---	SA-312 TP316 SMLS	160S	.343"		PLUGGED (ITEM 232)	383"	---	---	---		---	---		35	D10		5/16	3/8	
N76	NOT USED/SPARGE AIR	2"	---	STUB*	---	SA-312 TP316 SMLS	160S	.343"		PLUGGED (ITEM 232)	383"	---	---	---		---	---		35	D10		5/16	3/8	
N77	NOT USED/SPARGE AIR	2"	---	STUB*	---	SA-312 TP316 SMLS	160S	.343"		PLUGGED (ITEM 232)	383"	---	---	---		---	---		35	D10		5/16	3/8	
N78	NOT USED/SPARGE AIR	2"	---	STUB*	---	SA-312 TP316 SMLS	160S	.343"		PLUGGED (ITEM 232)	383"	---	---	---		---	---		35	D10		5/16	3/8	
N79	NOT USED																							
N80	NOT USED/CAMERA PORT	8"	---	STUB	---	SA-312 TP316 SMLS	80S	.500"		CAPPED (ITEM 226)	383"	---	---	---		---	---		10	D5		3/8	7/16	
N81	NOT USED/CAMERA PORT	8"	---	STUB	---	SA-312 TP316 SMLS	80S	.500"		CAPPED (ITEM 226)	407"	---	---	---		---	---		10	D5		3/8	7/16	
N82	EDUCTOR INLET	4"	---	STUB	---	SA-312 TP316 SMLS	80S	.337"		4"-40S	36-1/2"	---	---	---		---	---		23	D7		3/8	7/16	
N83	EDUCTOR INLET	4"	---	STUB	---	SA-312 TP316 SMLS	80S	.337"		4"-40S	36-1/2"	---	---	---		---	---		23	D7		3/8	7/16	
N84	VESSEL DISCHARGE OUTLET	10"	---	STUB	---	SA-312 TP316 SMLS	80S	.500"		10"-10S	-109"	---	---	---		---	---		7	D5		3/8		1
N85	RECIRCULATED CONDENSATE	4"	---	STUB	---	SA-312 TP316 SMLS	80S	.337"		4"-40S	393"	---	---	---		---	---		4	D5		3/8	7/16	
N86	OVERFLOW	10"	---	STUB	---	SA-312 TP316 SMLS	80S	.500"		10"-10S	339"	---	---	---		SA-240 316	5/16"		16	D5		5/16		1/4
N87	DEP SUMP INLET/RECIRCULATED OUTLET	3"	---	STUB	---	SA-312 TP316 SMLS	80S	.300"		3"-40S	393"	---	---	---		---	---		4	D5		5/16	3/8	

* = NOZZLES HAVE REDUCER (ITEM 27) ON TIP

** = "Z" DIMENSION TOLERANCE IS ± 1/4"

Please note that source, special nuclear, and byproduct materials, as defined in the Atomic Energy Act of 1954 (AEA) are regulated at the U. S. Department of Energy (DOE) facilities exclusively by DOE acting pursuant to its AEA authority. DOE asserts that pursuant to AEA, it has sole and exclusive responsibility and authority to regulate source, special nuclear, and byproduct materials at DOE-owned nuclear facilities. Information contained herein on radionuclides is provided for process description purposes only.

REVISIONS

Rev.	Date	Drawn By	Checked By	Description
1	3/2/18	DKM	JPM	UPDATED N51 DETAIL REF & N84 WELD SIZE; UPDATED "CONNECTING PIPE" FIELD FOR NOZ (N07) AND ALL SPARGER/ AIR NOZZLES

Do Not Scale Drawing

Shop Tolerance

Fractional	± 1/8"
Angular	± 1°
Circumference	± 1/16"
Mach. Surface	± 1/64"

Drawn	DKM
Checked	JPM
Approved	ERG
Quote No.	-
Job No.	27203
P.O. No.	POA-MVSC-00007

HARRIS Thermal Transfer Products
615 S. Springbrook Rd., Newberg, OR 97132
Phone (503)538-1260 / Fax (503)538-4281

Title: NOZZLE SCHEDULE

Customer: BECHTEL NATIONAL INC.

Destination: RICHLAND, WASHINGTON

Date	Size	Drawing No.	Rev.
10/20/17	D	27203	1

Scale: NONE

BECHTEL PROJECT: HANFORD TANK WASTE TREATMENT AND IMMOBILIZATION PLANT (WTP PROJECT) 2490-CM-POA-MVSC-00007-02-00002 Rev. 00C
VESSEL: 300" ID PROCESS CONDENSATE LAG STORAGE VESSEL TAG#: 24590-BOF-MV-DEP-VSL-00005B

NOZZLE ORIENTATION

NOZZLE #	RADIUS	ANGLE (DEGREE)	"Z" DIM
N01	102"	205.5	430"
N02	SHELL SIDE	225	342"
N04	36"	180	414"
N05	TOP CENTER	N/A	430"
N06	93"	132	402"
N07	102"	193	396"
N08	93"	257	402"
N09	93"	32	402"
N10	127"	97	386"
N11	127"	187	386"
N12	127"	277	386"
N13	127"	7	386"
N14	14"	270	414"
N15	61"	115.5	407"
N16	61"	167	407"
N17	61"	218	407"
N18	61"	270	407"
N19	61"	321	407"
N20	61"	12.5	407"
N21	61"	64.5	407"
N25	18"	321	414"
N27	114"	295.5	392"
N28	90"	77	400"
N29	102"	77	398"
N29a	90"	77	402"
N30	127"	64.5	388"
N30a	127"	64.5	392"
N31	76-1/2"	32	404"
N32	127"	315	386"
N33	102"	315	396"
N34	114"	334	392"
N36	SHELL SIDE	42	36-1/2"
N37	114"	25.5	392"
N38	18"	90	414"
N39	1		
N40	JACKET SIDE	180	65"
N41	90"	103	400"
N43	14"	180	414"
N44	50"	115.5	410"
N45	50"	167	410"
N46	50"	218	410"
N47	50"	270	410"
N48	50"	321	410"
N49	50"	12.5	410"
N50	50"	64.5	410"
N51	90"	90	400"
N52	90"	141	400"
N53	90"	193	400"
N54	90"	244	400"
N55	90"	295.5	400"
N56	90"	347	400"
N57	90"	38.5	400"
N58	102"	64.5	396"
N59	102"	116	396"
N60	102"	167	396"
N61	102"	217.5	396"
N62	102"	270	396"
N63	102"	321	396"
N64	102"	12.5	396"
N65	131"	77	383"
N66	131"	103	383"
N67	131"	128.5	383"
N68	131"	154	383"
N69	131"	180	383"
N70	131"	205.5	383"
N71	131"	231	383"
N72	131"	257	383"
N73	131"	283	383"
N74	131"	308.5	383"
N75	131"	334	383"
N76	131"	0	383"
N77	131"	25.5	383"
N78	131"	51	383"
N79			
N80	127"	347	383"
N81	72"	141	407"
N82	SHELL SIDE	359.5	36-1/2"
N83	SHELL SIDE	179.5	36-1/2"
N84	CENTER BOTTOM	89.5	-109"
N85	120"	109.5	393"
N86	SHELL SIDE	134.5	339"
N87	120"	129.5	393"

NOTE: 0° ON CUSTOMER ORIENTATION IS AT 269.5° ON THIS DWG.

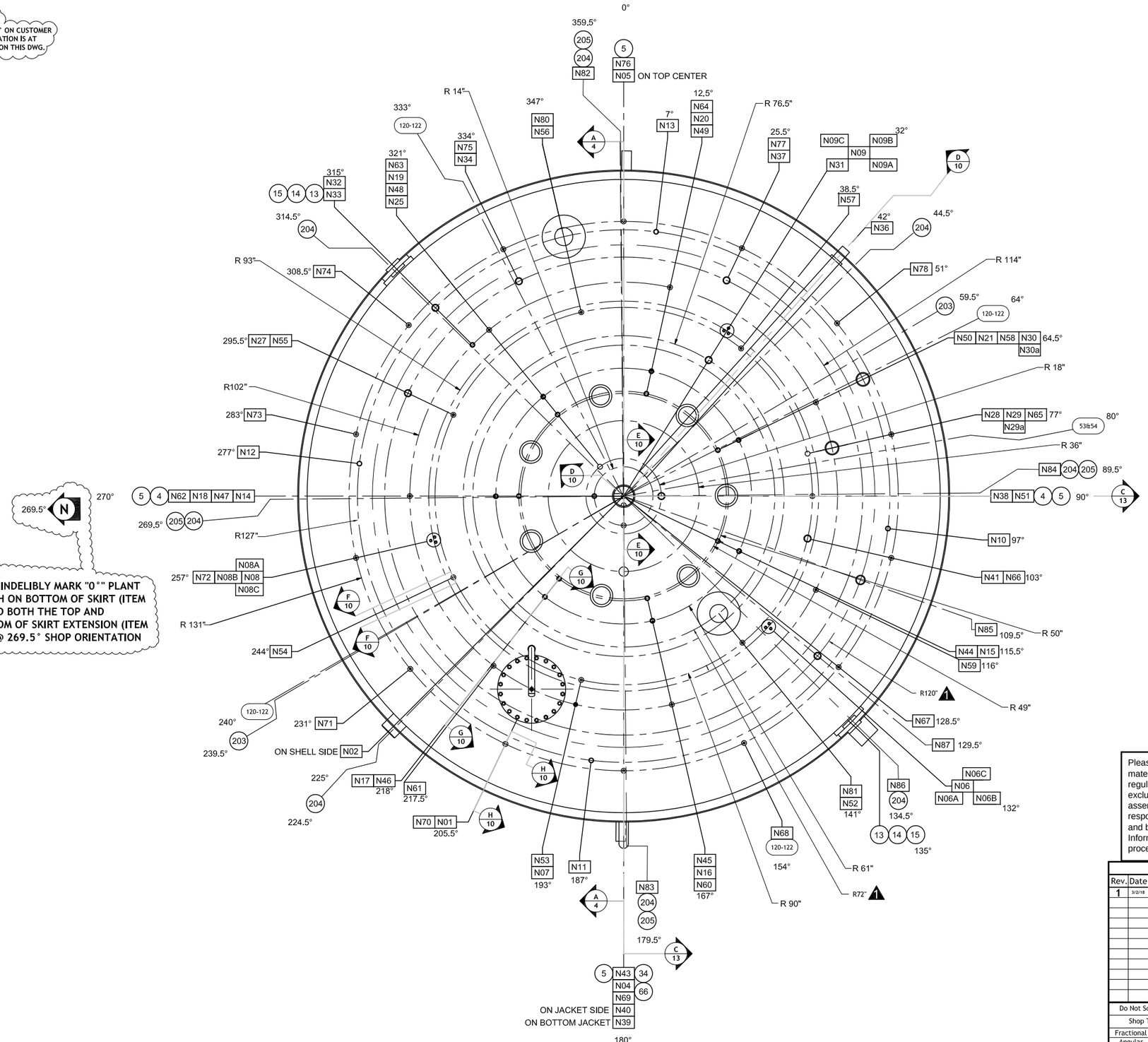

NOTE: INDELIBLY MARK "0°" PLANT NORTH ON BOTTOM OF SKIRT (ITEM 3) AND BOTH THE TOP AND BOTTOM OF SKIRT EXTENSION (ITEM 201) @ 269.5° SHOP ORIENTATION

ORIENTATION

(SEE D2 FOR NOZZLE ORIENTATION & SCHEDULE)

SCALE: 1/2" = 1' - 0"

Please note that source, special nuclear, and byproduct materials, as defined in the Atomic Energy Act of 1954 (AEA) are regulated at the U. S. Department of Energy (DOE) facilities exclusively by DOE acting pursuant to its AEA authority. DOE asserts that pursuant to AEA, it has sole and exclusive responsibility and authority to regulate source, special nuclear, and byproduct materials at DOE-owned nuclear facilities. Information contained herein on radionuclides is provided for process description purposes only.

REVISIONS

Rev.	Date	Drawn By	Checked By	Description
1	3/2/18	DKM	JPM	ADDED DIMS; UPDATED ORIENTATION INFO FOR (N39)

Do Not Scale Drawing

Shop Tolerance

Fractional	± 1/8"
Angular	± 1°
Circumference	± 1/16"
Mach. Surface	± 1/64"

HARRIS Thermal Transfer Products
615 S. Springbrook Rd., Newberg, OR 97132
Phone (503)538-1260 / Fax (503)538-4281

Drawn	DKM	Title:	NOZZLE ORIENTATIONS
Checked	JPM	Customer:	BECHTEL NATIONAL INC.
Approved	ERG	Destination:	RICHLAND, WASHINGTON
Quote No.	-	Date / Size / Drawing No. / Rev.	10/20/17 / D / 27203 / 1
Job No.	27203		
P.O. No.	POA-MVSC-00007	Scale: AS SHOWN	Sheet 3 Of 13

BECHTEL PROJECT: HANFORD TANK WASTE TREATMENT AND IMMOBILIZATION PLANT (WTP PROJECT) 24590-CM-POA-MVSC-00007-02-00002 Rev. 00C
VESSEL: 300" ID PROCESS CONDENSATE LAG STORAGE VESSEL TAG#: 24590-BOF-MV-DEP-VSL-00005B

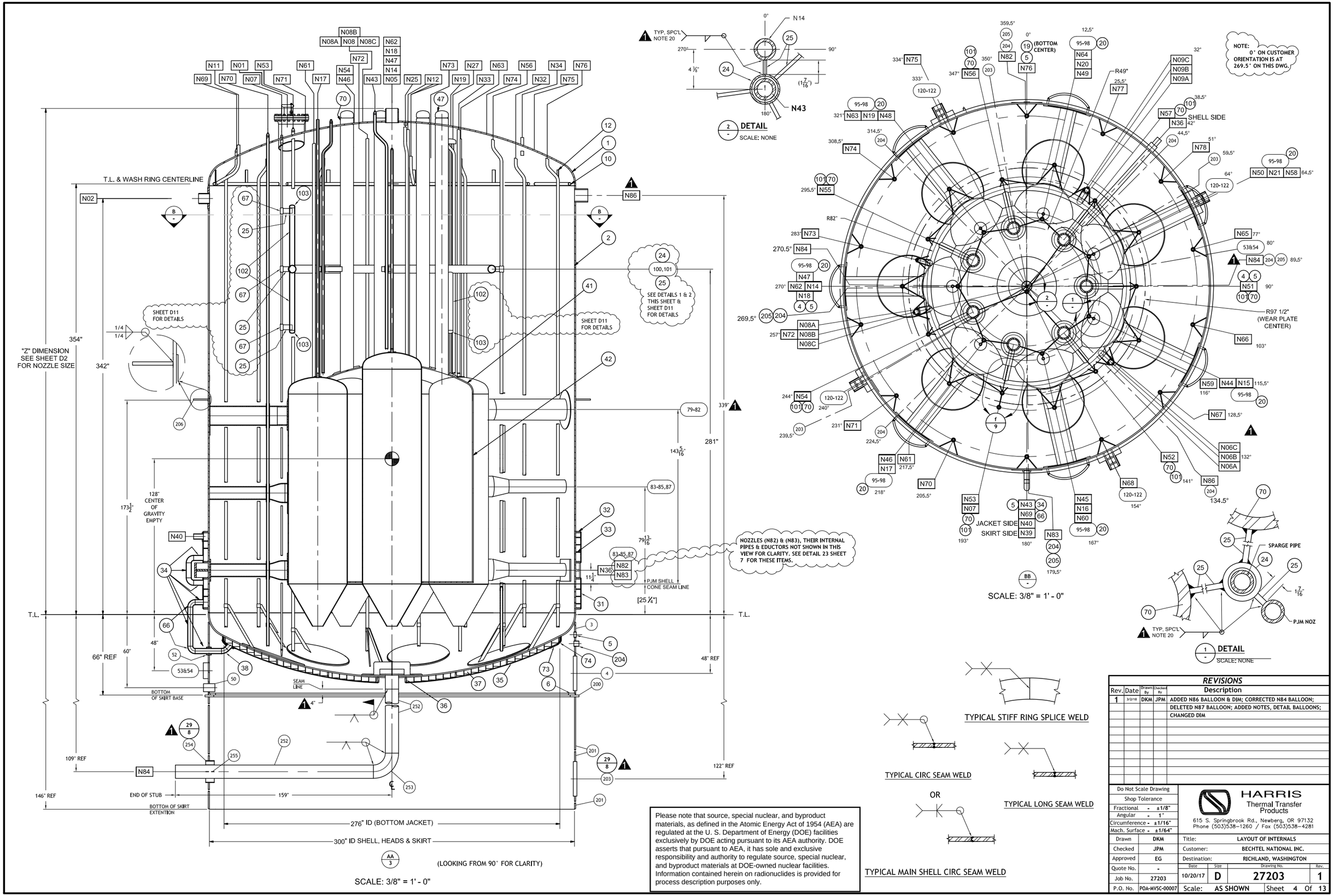

Please note that source, special nuclear, and byproduct materials, as defined in the Atomic Energy Act of 1954 (AEA) are regulated at the U. S. Department of Energy (DOE) facilities exclusively by DOE acting pursuant to its AEA authority. DOE asserts that pursuant to AEA, it has sole and exclusive responsibility and authority to regulate source, special nuclear, and byproduct materials at DOE-owned nuclear facilities. Information contained herein on radionuclides is provided for process description purposes only.

REVISIONS

Rev.	Date	Drawn By	Checked By	Description
1	3/2/18	DKM	JPM	ADDED N86 BALLOON & DIM; CORRECTED N84 BALLOON;
				DELETED N87 BALLOON; ADDED NOTES, DETAIL BALLOONS;
				CHANGED DIM

Do Not Scale Drawing	
Shop Tolerance	
Fractional	±1/8"
Angular	1°
Circumference	±1/16"
Mach. Surface	±1/64"
Drawn	DKM
Checked	JPM
Approved	EG
Quote No.	-
Job No.	27203
P.O. No.	POA-MVSC-00007

HARRIS Thermal Transfer Products
615 S. Springbrook Rd., Newberg, OR 97132
Phone (503)538-1260 / Fax (503)538-4281

Title:	LAYOUT OF INTERNALS		
Customer:	BECHTEL NATIONAL INC.		
Destination:	RICHLAND, WASHINGTON		
Date	Size	Drawing No.	Rev.
10/20/17	D	27203	1
Scale:	AS SHOWN	Sheet 4 Of 13	

BECHTEL PROJECT: HANFORD TANK WASTE TREATMENT AND IMMOBILIZATION PLANT (WTP PROJECT) 24590-CM-POA-MVSC-00007-02-00002 Rev. 00C
VESSEL: 300" ID PROCESS CONDENSATE LAG STORAGE VESSEL TAG#: 24590-BOF-MV-DEP-VSL-00005B

-REFERENCE OVERALL DRAWING S17-0114-001
-PARTS SUBJECT TO PMI WILL BE MECHANICALLY ETCHED WITH "PMIV".
-ALL MATERIAL SHALL BE 316/316L EXCEPT HARDWARE
-HARDWARE SHALL BE 300 SERIES SST WITH ALUMINUM STAR KNOBS

DVP-HEPA-00003A/B
DVP-HEPA-00004A/B

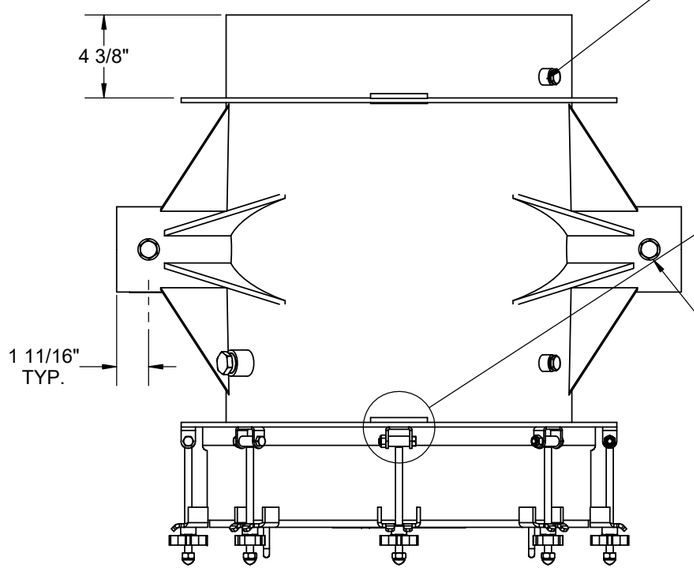

TOP VIEW

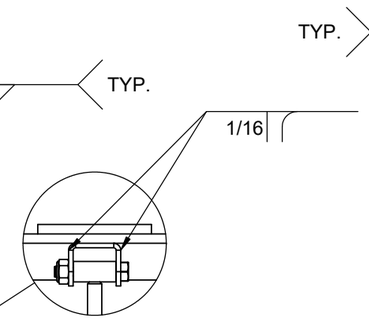

DETAIL B
SCALE 1 : 4

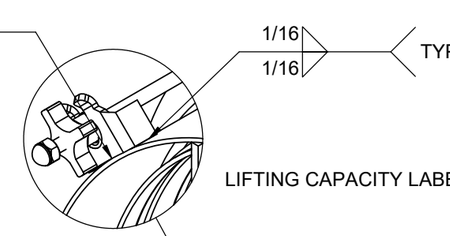

DETAIL C
SCALE 1 : 4

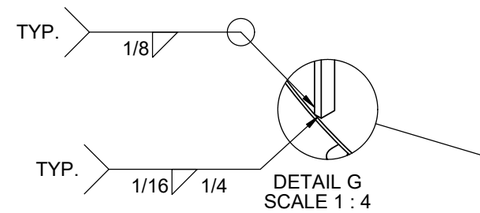

DETAIL G
SCALE 1 : 4

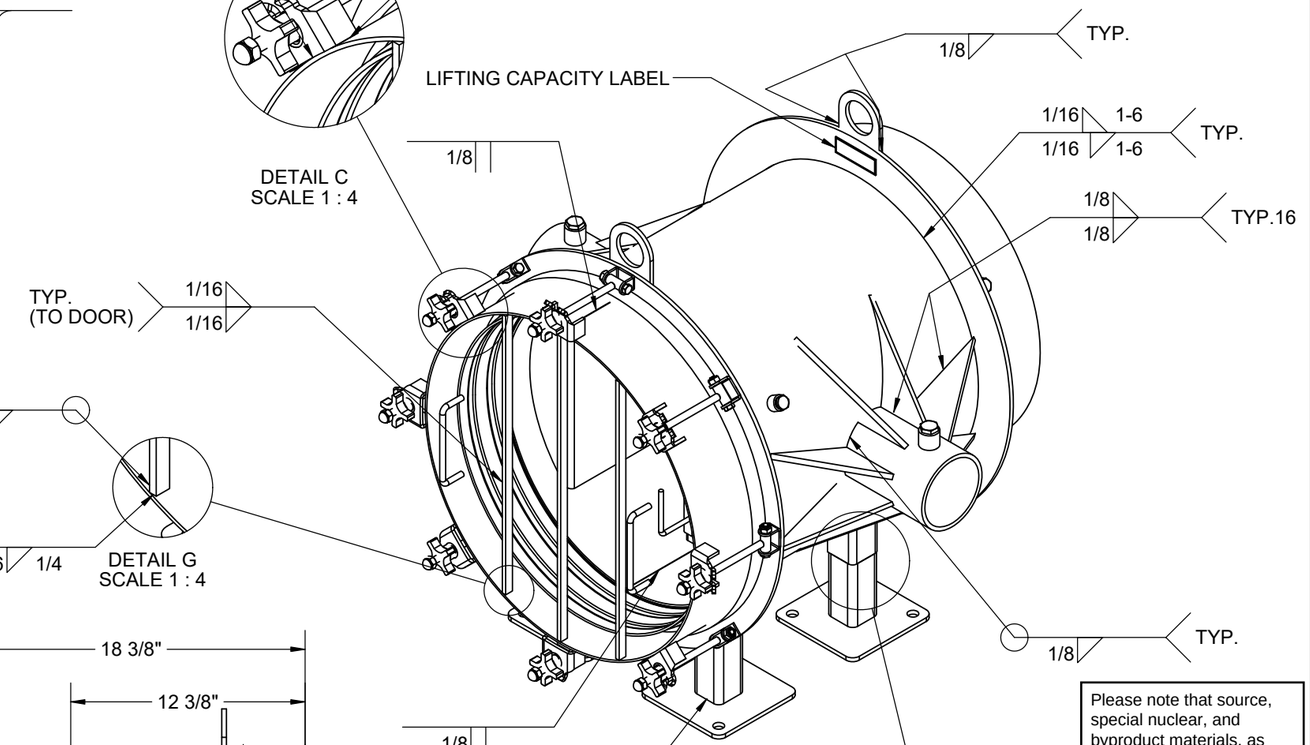

ISOMETRIC VIEW

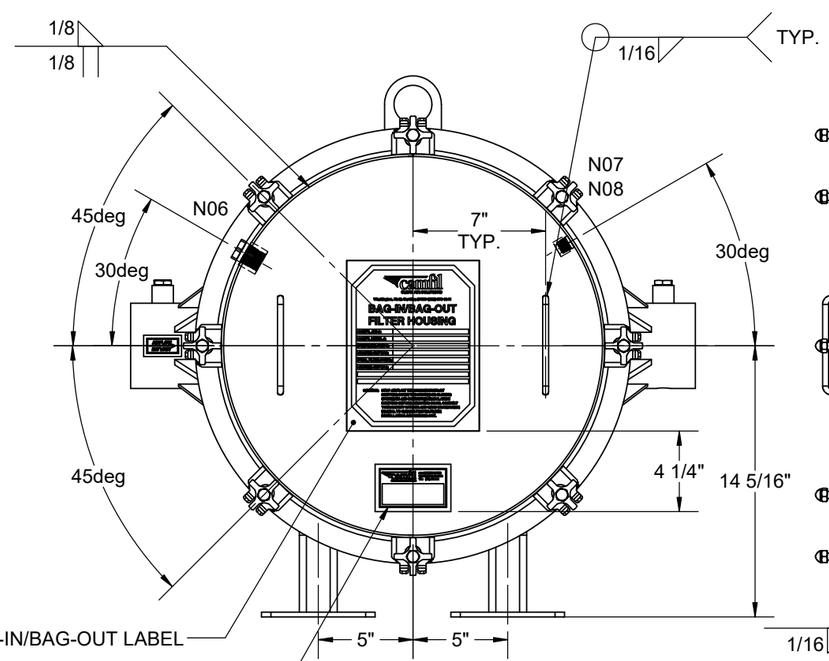

FRONT VIEW

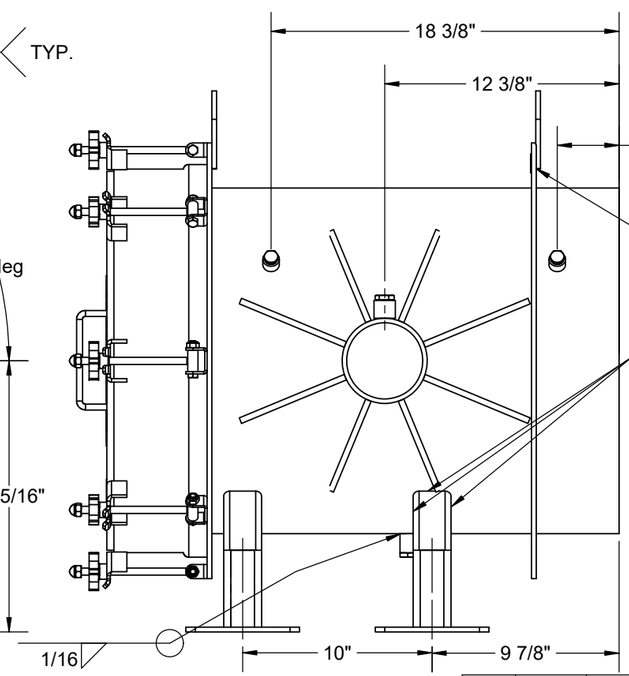

SIDE VIEW

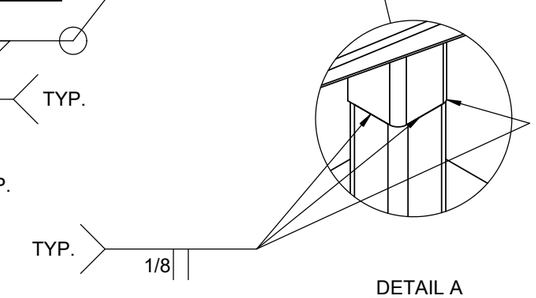

DETAIL A
SCALE 1 : 4

Please note that source, special nuclear, and byproduct materials, as defined in the Atomic Energy Act of 1954 (AEA) are regulated at the U. S. Department of Energy (DOE) facilities exclusively by DOE acting pursuant to its AEA authority. DOE asserts that pursuant to AEA, it has sole and exclusive responsibility and authority to regulate source, special nuclear, and byproduct materials at DOE-owned nuclear facilities. Information contained herein on radionuclides is provided for process description purposes only.

REV.	DRAWN BY DATE	DESCRIPTION:	CHECK BY DATE	APPR. BY DATE
G	WAW 3/9/18	NO CHANGES THIS SHEET	N/A N/A	PB 3/12/18
F	WAW 12/5/17	ADDED DIMENSIONS AND CALLOUTS	PB 12/5/17	AC 12/5/17

UNLESS OTHERWISE SPECIFIED TOLERANCES ARE:
ANGULAR: ±1
FRACTION: ±1/16"
DECIMAL: ±0.0625"

DRAWN BY:	DATE:
WAW	5/11/17
CHECK BY:	DATE:
AC	5/18/17
APPR. BY:	DATE:
RDC	5/18/17

SCALE: 1:8

camfil WASHINGTON NORTH CAROLINA www.camfil.com

DRAWING TITLE:
SHOP DETAIL AND ASSEMBLY DRAWING
W.O:G40886A

DWG SIZE	DRAWING NO.:	SHEET	OF	REV.
B	CB16-0273	1	3	G

DVP-HEPA-00003A/B
DVP-HEPA-00004A/B

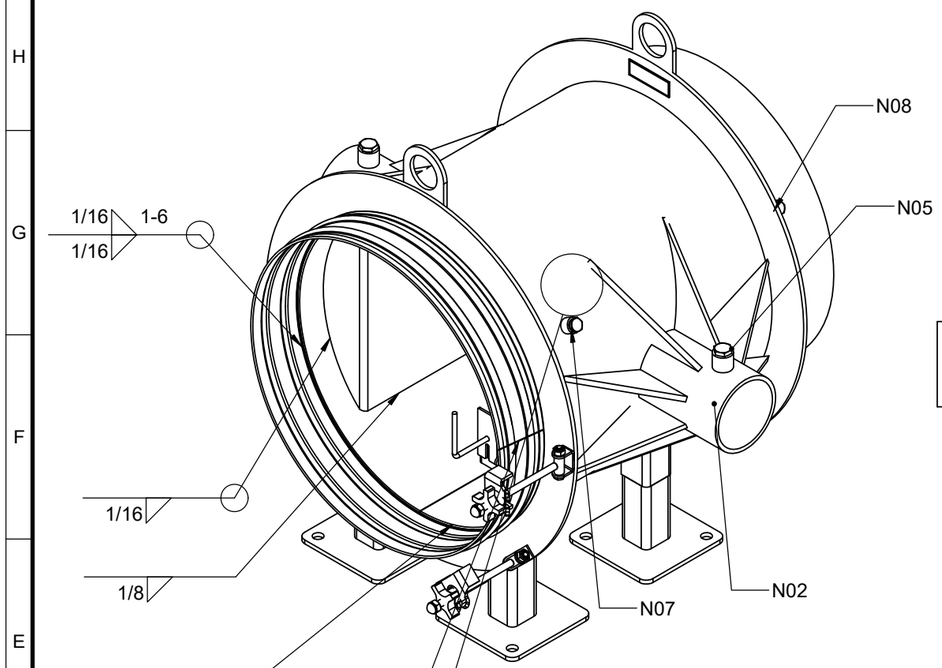

FRONT ISOMETRIC VIEW

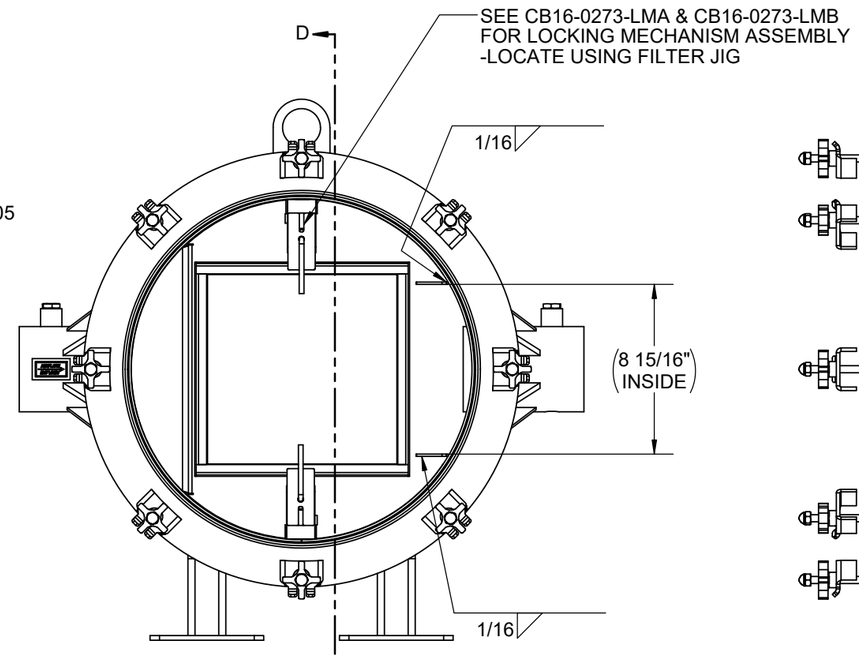

FRONT VIEW

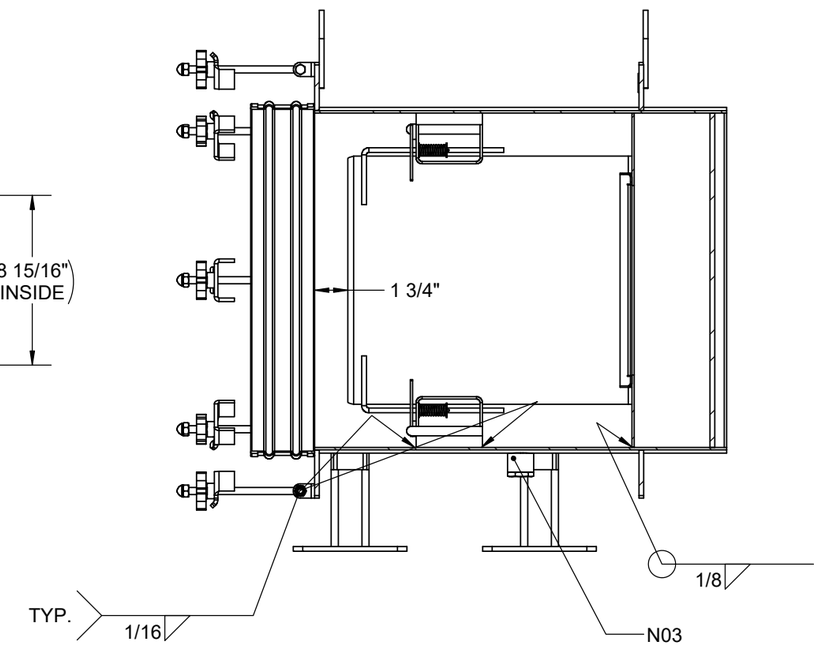

SECTION D-D

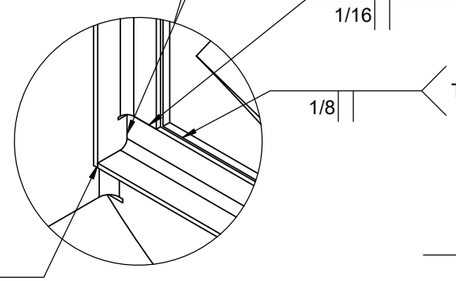

DETAIL E
SCALE 1 : 2

KNIFE EDGE DETAIL

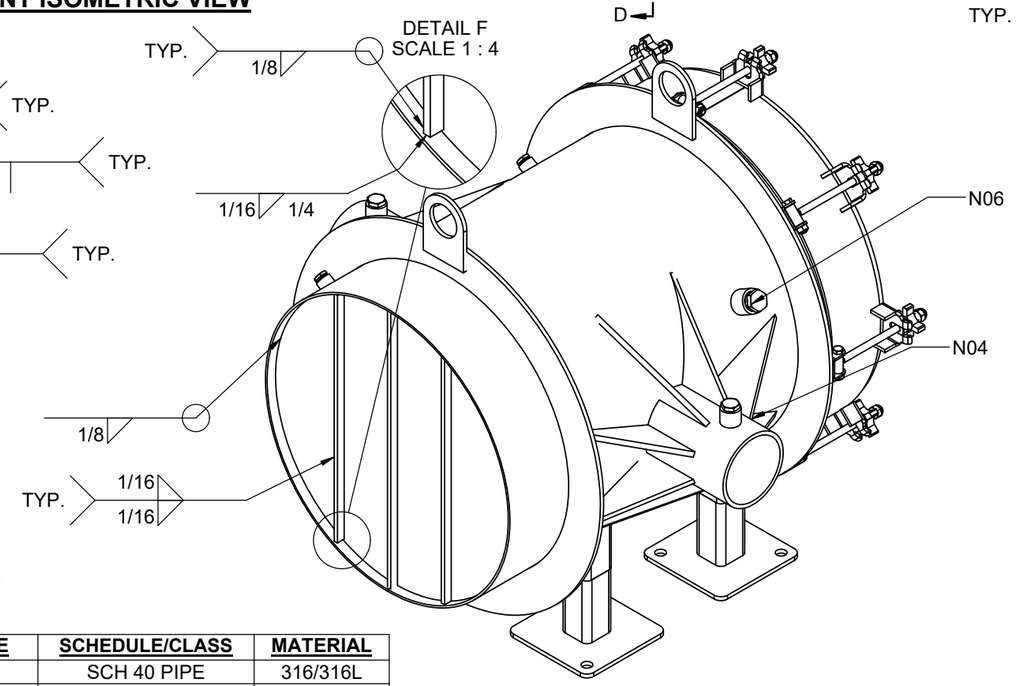

Please note that source, special nuclear, and byproduct materials, as defined in the Atomic Energy Act of 1954 (AEA) are regulated at the U. S. Department of Energy (DOE) facilities exclusively by DOE acting pursuant to its AEA authority. DOE asserts that pursuant to AEA, it has sole and exclusive responsibility and authority to regulate source, special nuclear, and byproduct materials at DOE-owned nuclear facilities. Information contained herein on radionuclides is provided for process description purposes only.

-REFERENCE OVERALL DRAWING S17-0114-001
-PARTS SUBJECT TO PMI WILL BE MECHANICALLY ETCHED WITH "PMIV".
-ALL MATERIAL SHALL BE 316/316L EXCEPT HARDWARE
-HARDWARE SHALL BE 300 SERIES SST WITH ALUMINUM STAR KNOBS

*NOZZLE N01 & N02 TO BE PREPARED FOR FIELD WELDING

NOZZLE NUMBER	FUNCTION	SIZE	SCHEDULE/CLASS	MATERIAL
N01*	AIR INLET	4"	SCH 40 PIPE	316/316L
N02*	AIR OUTLET	4"	SCH 40 PIPE	316/316L
N03	DRAIN	3/4"	#150 HALF COUPLING	316/316L
N04	UPSTREAM STATIC PORT	1/2"	#150 HALF COUPLING	316/316L
N05	DOWNSTREAM STATIC PORT	1/2"	#150 HALF COUPLING	316/316L
N06	INJECTION PORT	3/4"	#150 HALF COUPLING	316/316L
N07	UPSTREAM SAMPLE PORT	3/8"	#150 HALF COUPLING	316/316L
N08	DOWNSTREAM SAMPLE PORT	3/8"	#150 HALF COUPLING	316/316L

REV.	DRAWN BY DATE	DESCRIPTION:	CHECK BY DATE	APPR. BY DATE
G	WAW 3/9/18	NO CHANGES THIS SHEET	N/A N/A	PB 3/12/18
F	WAW 12/5/17	NO CHANGES THIS SHEET	PB 12/5/17	AC 12/5/17

UNLESS OTHERWISE SPECIFIED TOLERANCES ARE:
ANGULAR: ±1
FRACTION: ±1/16"
DECIMAL: ±0.0625"

DRAWN BY: WAW	DATE: 5/11/17
CHECK BY: AC	DATE: 5/18/17
APPR. BY: RDC	DATE: 5/18/17
SCALE: 1:8	

camfil WASHINGTON NORTH CAROLINA www.camfil.com

DRAWING TITLE:
SHOP DETAIL AND ASSEMBLY DRAWING
W.O:G40886A

DWG SIZE	DRAWING NO.:	SHEET	OF	REV.
B	CB16-0273	2	3	G

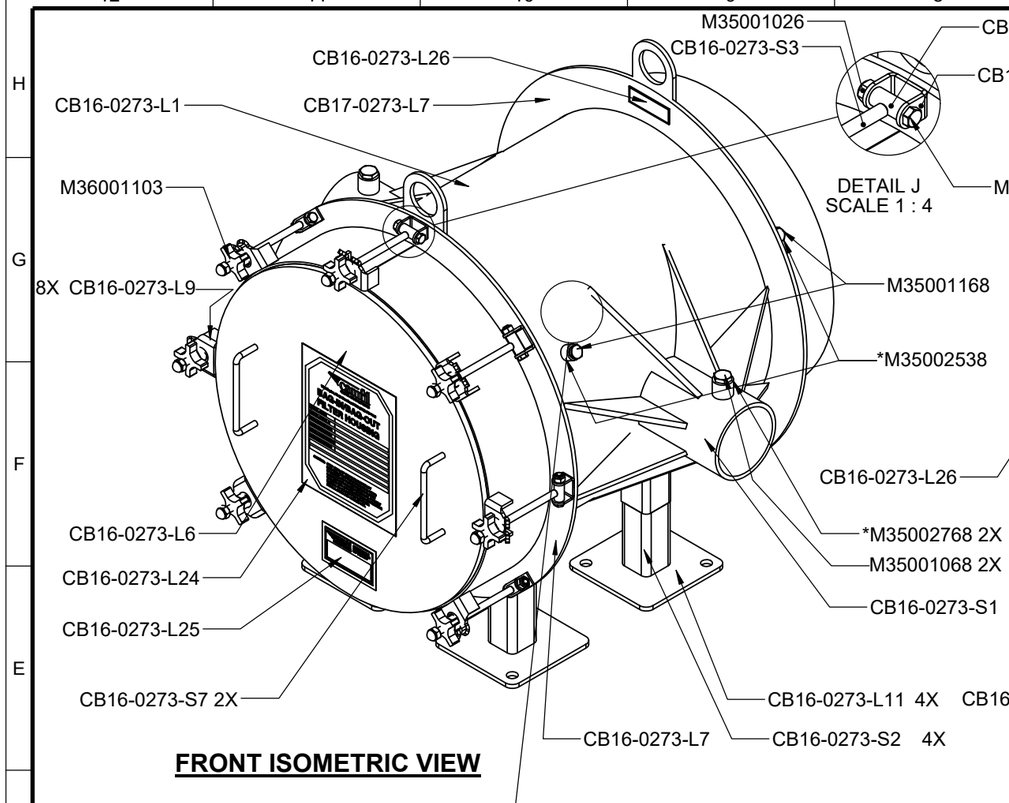

FRONT ISOMETRIC VIEW

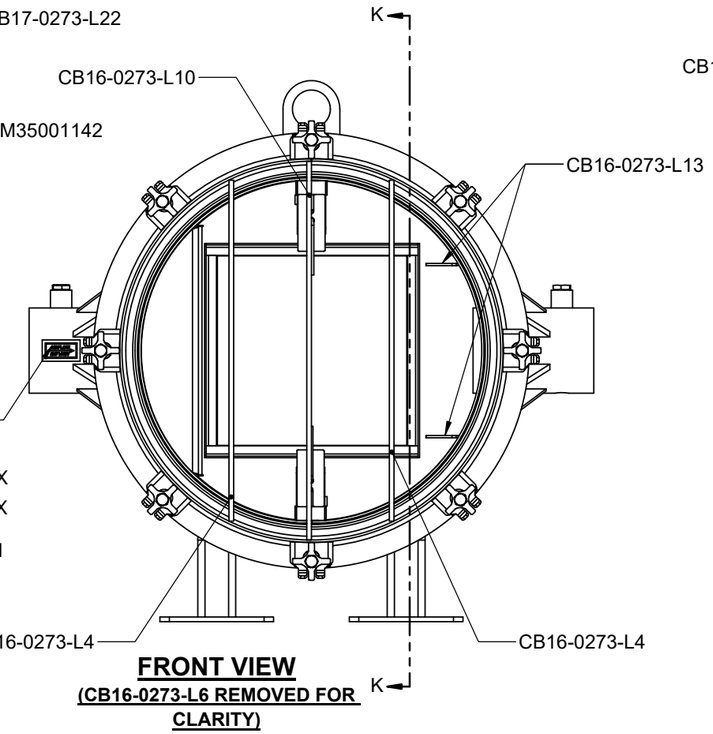

FRONT VIEW
(CB16-0273-L6 REMOVED FOR CLARITY)

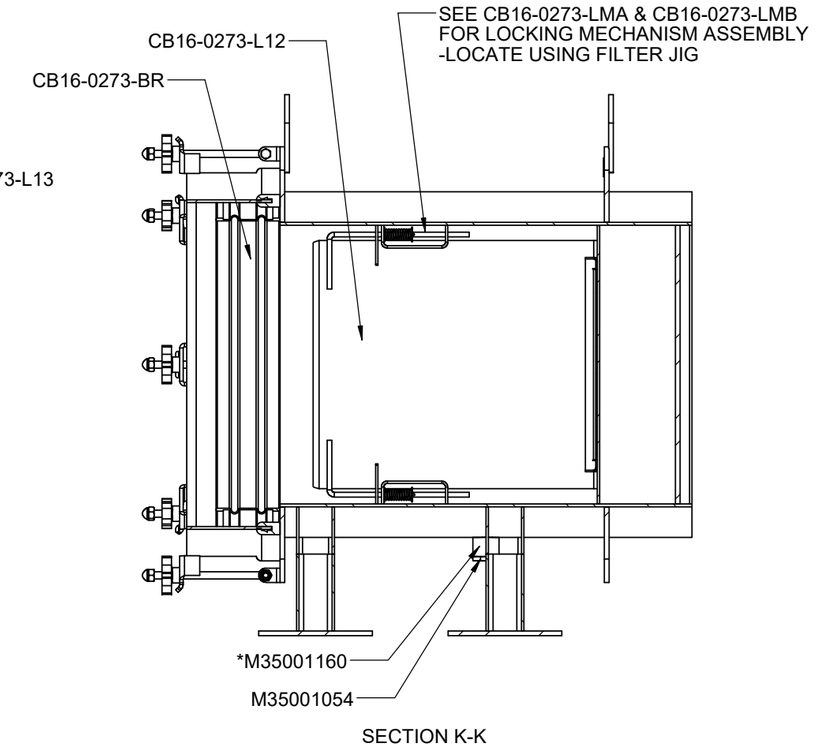

SECTION K-K

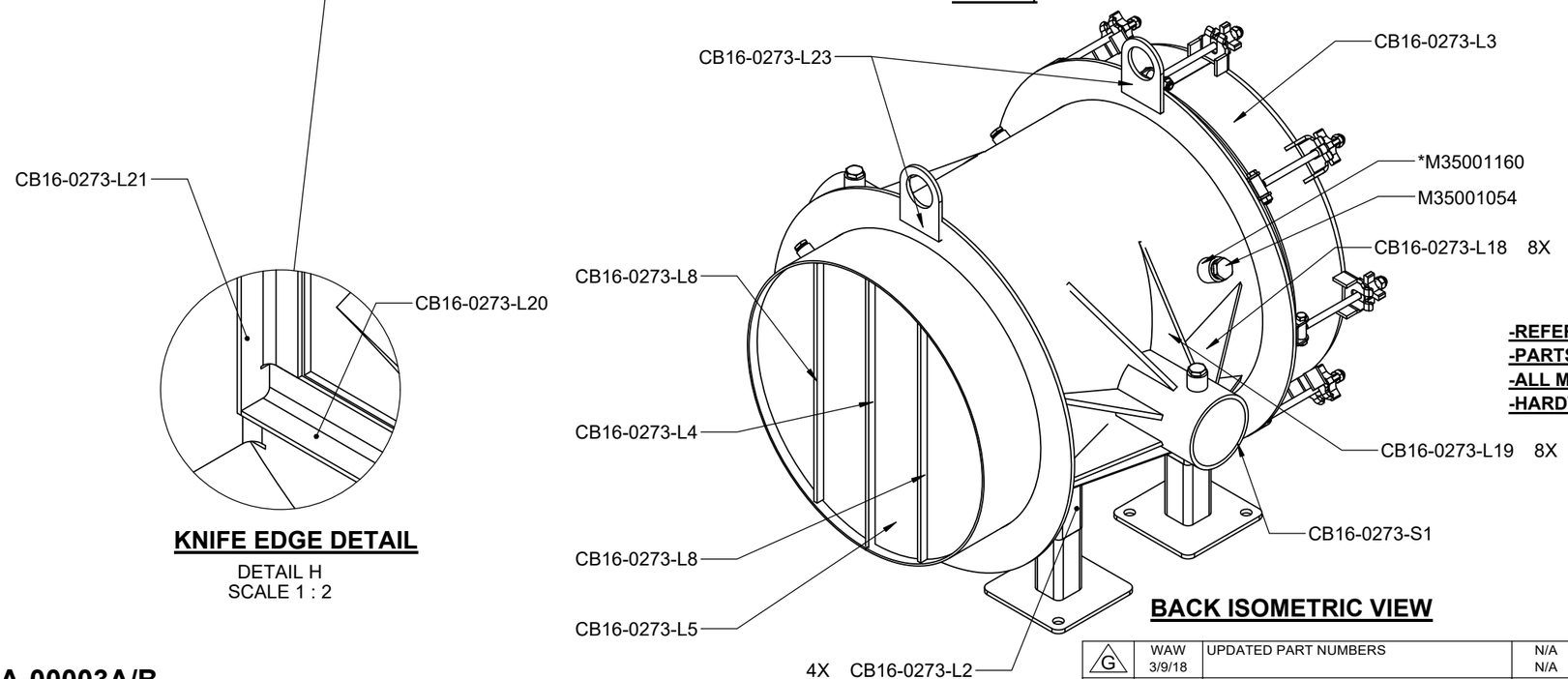

BACK ISOMETRIC VIEW

KNIFE EDGE DETAIL

DETAIL H
SCALE 1 : 2

***-COUPLINGS ARE LOCATED BY LASERED OUT HOLES IN HOUSING BARREL**

Please note that source, special nuclear, and byproduct materials, as defined in the Atomic Energy Act of 1954 (AEA) are regulated at the U. S. Department of Energy (DOE) facilities exclusively by DOE acting pursuant to its AEA authority. DOE asserts that pursuant to AEA, it has sole and exclusive responsibility and authority to regulate source, special nuclear, and byproduct materials at DOE-owned nuclear facilities. Information contained herein on radionuclides is provided for process description purposes only.

-REFERENCE OVERALL DRAWING S17-0114-001
-PARTS SUBJECT TO PMI WILL BE MECHANICALLY ETCHED WITH "PMIV".
-ALL MATERIAL SHALL BE 316/316L EXCEPT HARDWARE
-HARDWARE SHALL BE 300 SERIES SST WITH ALUMINUM STAR KNOBS

DVP-HEPA-00003A/B
DVP-HEPA-00004A/B

REV.	DRAWN BY DATE	DESCRIPTION:	CHECK BY DATE	APPR. BY DATE
G	WAW 3/9/18	UPDATED PART NUMBERS	N/A N/A	PB 3/12/18
F	WAW 12/5/17	NO CHANGES THIS SHEET	PB 12/5/17	AC 12/5/17

UNLESS OTHERWISE SPECIFIED TOLERANCES ARE:
ANGULAR: ±1
FRACTION: ±1/16"
DECIMAL: ±0.0625"

DRAWN BY:	DATE:
WAW	5/11/17
CHECK BY: AC	DATE: 5/18/17
APPR. BY: RDC	DATE: 5/18/17

SCALE: 1:8

camfil WASHINGTON NORTH CAROLINA www.camfil.com

DRAWING TITLE:
SHOP DETAIL AND ASSEMBLY DRAWING
W.O:G40886A

DWG SIZE	DRAWING NO.:	SHEET	OF	REV.
B	CB16-0273	3	3	G

24590-CD-POA-MEE0-00004-02-00001 00C
received
2017-09-28
R80038798

ITEMS		
ITEM	QTY	DESCRIPTION
1	1	FRAME ASSEMBLY
2	1	CSS4F6N33M4XSLTJWJ-02
3	1	CSS4F6N33M4XSLTJWJ-01
4	2	SCRP4X-14A-4-1C-UL

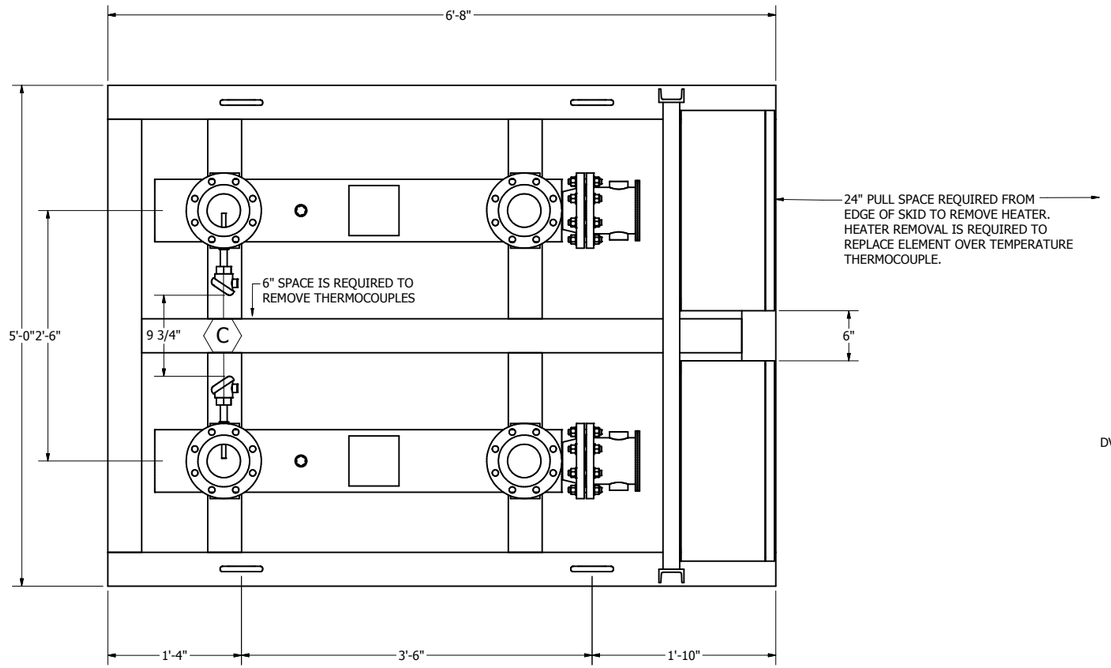

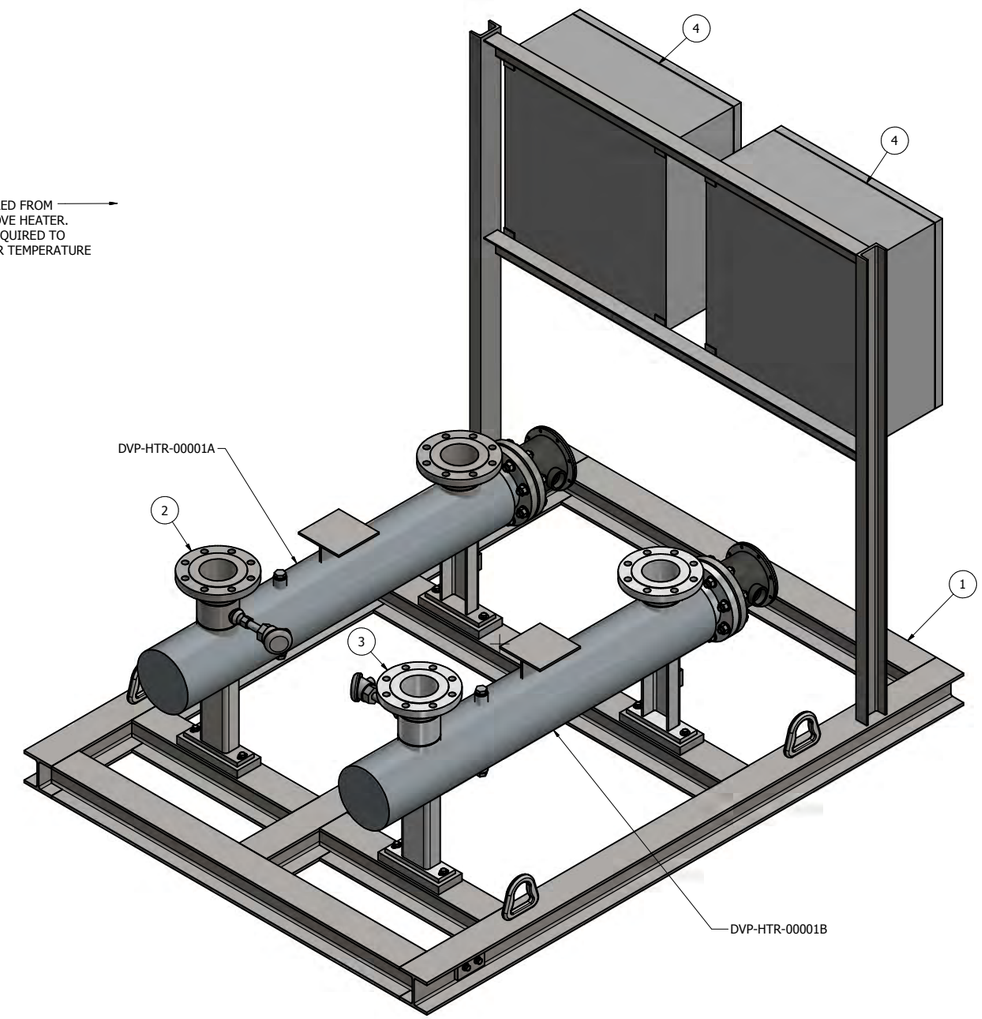

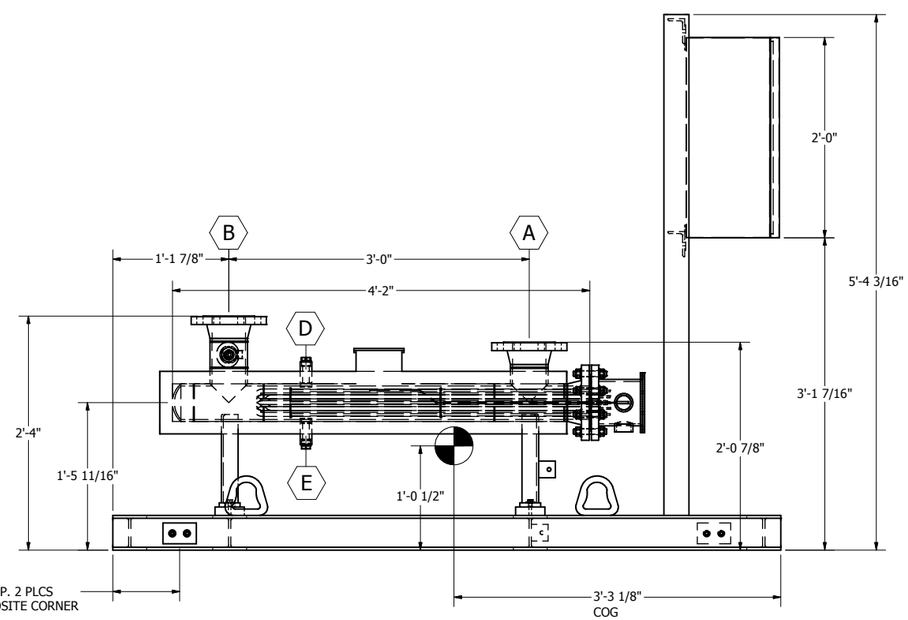

SCHEDULE OF OPENINGS				
CONNECTION	SERVICE	SIZE/RATING/TYPE	DVP-HTR-00001A	DVP-HTR-00001B
A	INLET	4"150# RFWN	N01	N03
B	OUTLET	4" 150# RFWN	N02	N04
C	TTW	3/4" 3000# TOL		
D	SPARE	3/4" 3000# THRD'D CPLG	N08	N07
E	DRAIN	3/4" 3000# THRD'D CPLG	N06	N05

Please note that source, special nuclear, and byproduct materials, as defined in the Atomic Energy Act of 1954 (AEA) are regulated at the U. S. Department of Energy (DOE) facilities exclusively by DOE acting pursuant to its AEA authority. DOE asserts that pursuant to AEA, it has sole and exclusive responsibility and authority to regulate source, special nuclear, and byproduct materials at DOE-owned nuclear facilities. Information contained herein on radionuclides is provided for process description purposes only.

1. CLEAN AND PAINT SKID PER GAUMER DATA SHEET.
2. HEATER TO BE INSULATED WITH 1 ½"CAL SILICATE AND ALUMINUM JACKET.
3. EACH HEATER WEIGHS 35 LBS. EACH VESSEL WEIGHS 145 LBS. TOTAL DRY WEIGHT 1300 LBS. ADD 500 LBS FOR SHIPPING.
4. FIELD WELDS ATTACHING SKID TO BASEPLATE SHALL BE ¼" FILLET WELDS AND TOTAL 24" IN LENGTH AS A MINIMUM. WELD LOCATIONS SHOULD BE EQUALLY SPACED AROUND PERIMETER IN ANY COMBINATION OF 4 WELDS OR MORE THAT IS EQUAL TO OR GREATER THAN 24" TOTAL WELD LENGTH.

NOZZLE LOADS						
	lb			lb-ft		
NOZZLE	F_X	F_Y	F_Z	M_X	M_Y	M_Z
4" 150#	1080	1080	1080	804	804	804

FOUNDATION LOAD TABLE						
Operating Load =1300 lbs, Friction Load, +X,+Y,-Z, UBC-97						
	Dead Weight (lb)			Shear Load (lbf) Ss=0.36g		
POS	Fx	Fy	Fz	Fx	Fy	Fz
1	0	0	325	117	117	0
2	0	0	325	117	117	0
3	0	0	325	117	117	0
4	0	0	325	117	117	0

CUSTOMER: BECHTEL NATIONAL INC
DOCUMENT CODE:
PROJECT PO: 24590-CD-POA-MEE0-00004
PROJECT NUMBER: C27106
PROJECT NAME: HANFORD TANK WASTE TREATMENT AND IMMOBILIZATION PLANT (WTP PROJECT)
PROJECT LOCATION: RICHLAND, WA

REV	DESCRIPTION	DATE	APPROVED
1	IFC	9/15/2017	JL
0	IFC	6/19/2017	JL
A	IFA	4/28/2017	JL

REVISION HISTORY

GAUMER PROCESS®
13616 HEMPSTEAD ROAD
HOUSTON, TEXAS USA
PHONE: (713) 460-5200
FAX: (713) 460-1444

SCALE: 1 1/2"=1'
DRAWING NO.: C27106-GAR
REV: 1
DWG BY: DS
DATE: 4/28/2017
DESCRIPTION: GENERAL ARRANGEMENT DVP HEPA FILTER PREHEATER SKID
CUSTOMER: BECHTEL NATIONAL INC
PO#: 24590-CD-POA-MEE0-00004

Please note that source, special nuclear, and byproduct materials, as defined in the Atomic Energy Act of 1954 (AEA) are regulated at the U. S. Department of Energy (DOE) facilities exclusively by DOE acting pursuant to its AEA authority. DOE asserts that pursuant to AEA, it has sole and exclusive responsibility and authority to regulate source, special nuclear, and byproduct materials at DOE-owned nuclear facilities. Information contained herein on radionuclides is provided for process description purposes only.

CBC FAN ASSEMBLY NO: 340066-11

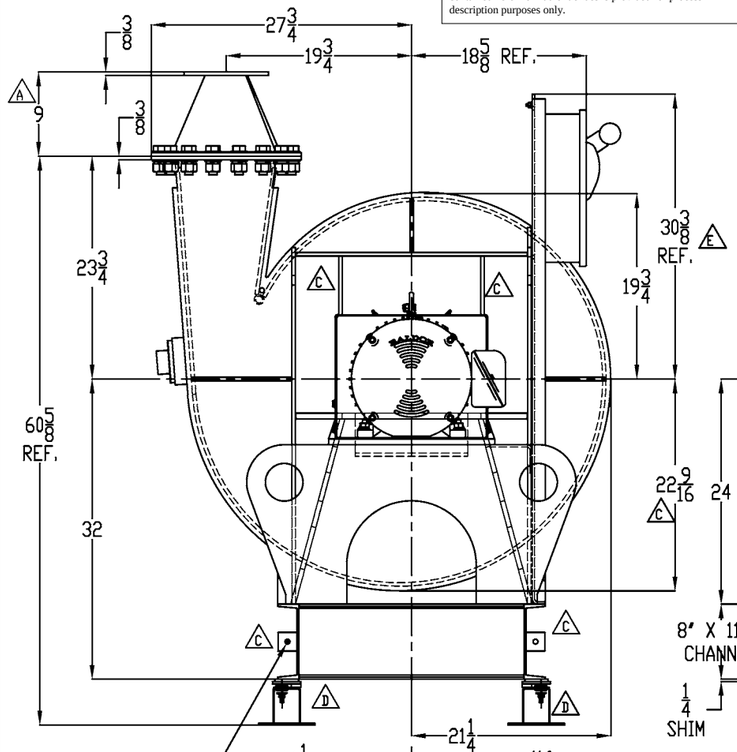

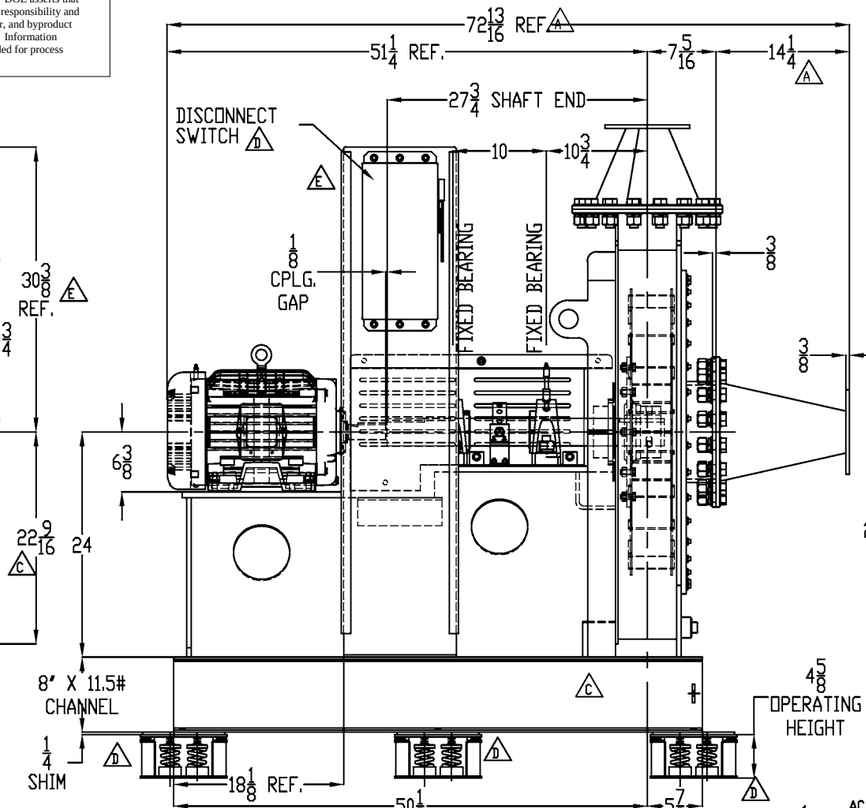

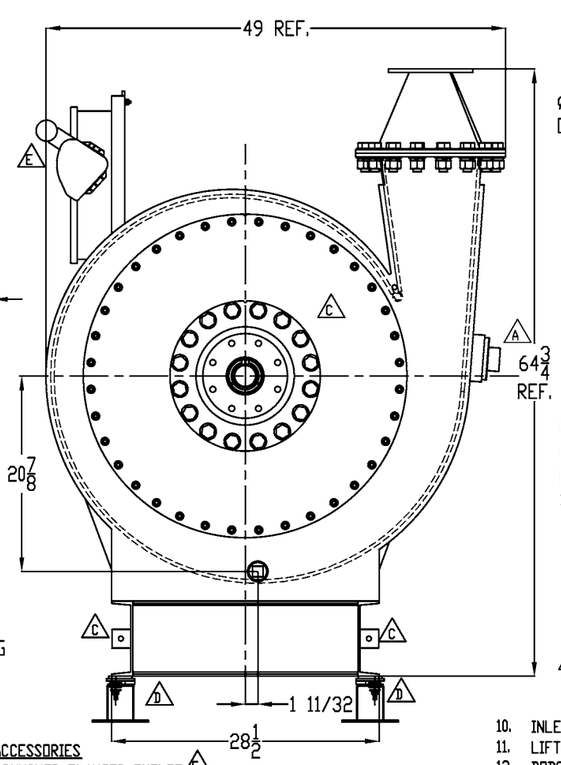

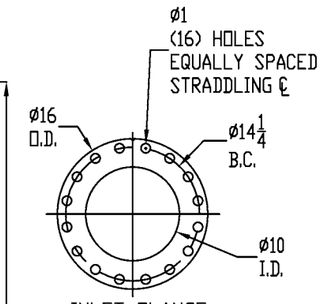

INLET FLANGE PUNCHING DETAIL

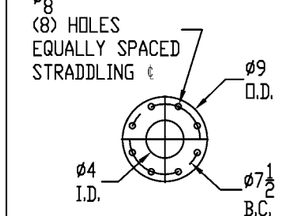

TRANSITION FLANGE PUNCHING DETAIL

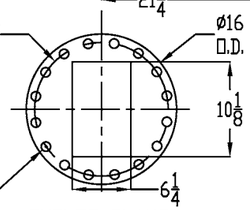

OUTLET FLANGE PUNCHING DETAIL

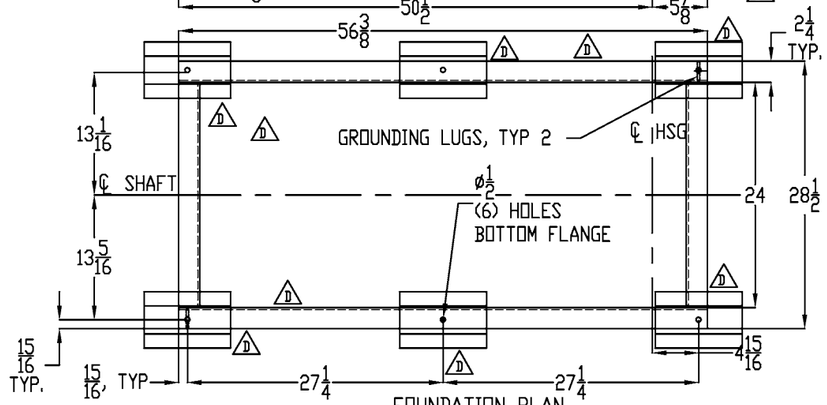

FOUNDATION PLAN

NOTES:

A. D PUNCHINGS DUE TO LEAK RESISTANT CONSTRUCTION

B. MOTOR IS BALDOR/RELIANCE OR EQUIVALENT, PREMIUM EFFICIENCY, FOOT MOUNTED, CAST IRON FRAME, F-1 CONDUIT BOX LOCATION, AND VFD SUITABLE, FURNISHED AND MOUNTED BY CBC, FOR FURTHER DETAILS SEE TITLE BLOCK.

C. COUPLING IS FALK TYPE T STEELFLEX, T10, 1080T, WITH SET SCREWS, BORED FOR CLEARANCE FIT ON THE FOLLOWING SHAFT DIA.
FAN SHAFT: 2.9370/2.9350 WITH 3/4 X 3/8 KEYWAY
MOTOR SHAFT: 1.6250/1.6240 WITH 3/8 X 3/16 KEYWAY
FURNISHED AND MOUNTED BY CBC.

D. JOHN CRANE DOUBLE LIP SHAFT SEAL, WITH 316(L) STAINLESS STEEL HOUSING. MODEL NUMBER DC-0035-293-D-316-STD. FURNISHED AND MOUNTED BY CBC.

E. MS MODEL M2S-1C 500-1040 LBS. VIBRATION ISOLATORS WITH INTEGRAL SEISMIC RESTRAINT AND INTERNAL ADJUSTMENT FOR 1 INCH DEFLECTION. FURNISHED BY PMT AND MOUNTED BY OTHERS. A C

F. ALL STATIC COMPONENTS TO BE WELDED PER D1.1 CODE WELDING. WHEEL TO BE WELDED BASED ON AWS PROCEDURES. C

G. WHEEL WITH ANTI-THRUST VANES TO BE G2.5 BALANCED. C

H. DETAILS OF MATERIAL, WEIGHTS, AND COMPLETE B.O.M. ARE ON 340066-01-02 & 34006-01-03

J. 9 X 9 SAMPLE OF EACH SHEET OF STEEL USED.

K. PROVIDE SAMPLE OF WHEEL AND HUB

NOTES (CONTINUED):

L. PROVIDE THE FOLLOWING DOCUMENTATION: SAFETY DATA SHEET FOR LUBRICATION, RUN TEST PROCEDURE AND REPORT, BALANCING PROCEDURE AND REPORT, DYE PENETRANT TESTING PROCEDURES AND REPORT, C INSPECTION AND TEST PLAN, WELD PROCEDURES AND INSPECTION REPORTS, WELD MAPS, WELDER QUALIFICATION RECORDS, CERTIFICATE OF COMPLIANCE, AND CBC ASSEMBLY CHECKLIST.

M. E C A EATON DISCONNECT SWITCH, MODEL DH361NWK316, NEMA 4X STAINLESS STEEL FUSIBLE DISCONNECT WITH 2 MYERS HUBS AND 4 SEAL TILE. WIRED FROM DISCONNECT SWITCH TO MOTOR. FURNISHED AND MOUNTED BY CBC.

N. D SPEED SENSOR IS ELECTRO SENSORS. P/N ST420-D1 WITH S0312P0612B0160 PULSAR WRAP.

ACCESSORIES

1. PUNCHED FLANGED OUTLET E
2. PUNCHED FLANGED INLET
3. LEAK RESISTANT CONSTRUCTION.
4. 2205 STAINLESS STEEL WHEEL WITH 316/316L (MAX 0.030% C) STAINLESS STEEL HUB. WHEEL TO HAVE DYE PENETRANT TEST
5. 316/316L (MAX 0.030% C) STAINLESS STEEL AIRSTREAM AND EXTERIOR, INCLUDING SHAFT, HOUSING & BASE, FLANGED OUTLET, FLANGED INLET/COVERPLATE, DRAIN, INSPECTION PORT, GREASE LEADS, LIFTING LUGS, E INLET SCREEN AND ALL HARDWARE.
6. 1 1/2" NPT HOUSING DRAIN WITH PLUG
7. 4" NPT INSPECTION PORT LOCATED AT 9 O'CLOCK AS VIEWED FROM THE DRIVE SIDE
8. EXTENDED GREASE FITTINGS
9. SHAFT, BEARING AND COUPLING GUARD, STANDARD STEEL CONSTRUCTION WITH PAINTED OSHA YELLOW.
10. INLET SCREEN
11. LIFTING LUGS
12. DODGE GRIP TIGHT BEARINGS
13. C MOUNTING BRACKET FOR SPEED SENSOR
14. C A INLET FLANGE TRANSITION MEET STANDARD ANSI 125/150# FLANGE
15. C A OUTLET FLANGE TRANSITION MEET STANDARD ANSI 125/150# FLANGE
16. GROUNDING LUGS

REV-E 01/24/18
CORRECTED SPELLING ON "OUTLET"-ACCESSORIES 1, "LIFTING"-ACCESSORIES 5, CHANGED DISCONNECT SWITCH AND HEIGHT OF MOUNTING BRACKET, ADDED FLANGES TO VERTICAL EDGES OF DISCONNECT SWITCH MOUNTING BRACKET, CHANGED DISCONNECT SWITCH MODE, CHANGED "CUSTOMER" TO "PMT" PER C/O #8 01/15/18

REV-D 12/22/17 AWG
ADDED DISCONNECT SWITCH MOUNTING BRACKET VERTICALLY, THE VIBRATION ISOLATOR TO BE WELDED TO FAN CHANNEL WITH SHIMMING OF 1/4 316L SS AND REMOVED NOTE A ON 340066-01-01 PER C/O #7 12/13/17

QUANTITY OF FANS: 2

TAG: P.O. 8931
1ST FAN: DVP-EXHR-00001A C
1ST MOTOR: DVP-MTR-00001A
2ND FAN: DVP-EXHR-00001B
2ND MOTOR: DVP-MTR-00001B

CAUTION
PRIOR TO ERECTION AND START-UP, REFER TO SERVICE MANUAL FOR INSTRUCTIONS AND SAFETY PRECAUTIONS
SCALE NONE

ALL DIMENSIONS IN INCHES
FAN SIZE 60 & BELOW +/- 1/8"
FAN SIZE ABOVE 60 +/- 1/4"

PURCHASER TO PROVIDE OPENINGS IN BUILDING OR STRUCTURE OF SUFFICIENT SIZE TO PERMIT ENTRANCE OF EQUIPMENT PARTS AS SHOWN ON THIS DRAWING. THIS DOCUMENT CONTAINS MATERIAL AND/OR INFORMATION WHICH IS THE PROPERTY OF CHICAGO BLOWER CORP AND SUPPLIED ONLY ON A CONFIDENTIAL BASIS. NO TRANSMITTAL OR DISCLOSURE SHALL BE MADE TO ANY PERSON, FIRM, OR CORPWITHOUT THE PRIOR WRITTEN APPROVAL OF CHICAGO BLOWER CORP.

ORDER # 340066		CUST P.O. # 8931	
CUST. PREFERRED METAL TECHNOLOGY		JOB NAME SAME AS	
TAG FAN SEE ABOVE		DESTINATION WOODRIDGE, IL	

PERFORMANCE

CFM	DV FT/MIN	SP IN W.G	RPM	BHP @ OPER. DENSITY	BHP @ .075 LB/CU-FT	TEMP Deg. F.	ALT. FEET	OPER. DENSITY LB/CU-FT	WR2 LB-FT2
200	367	50	3499	10.79		143/200	674	0.059	

MOTOR DATA

HP	RPM	CURRENT PHASE	CURRENT HERTZ	CURRENT VOLTAGE	FRAME	TYPE ENCLOSURE	SERVICE FACTOR
15	3600	3	60	230/460	254T	TEFC	1.15

CHICAGO BLOWER CORPORATION
1675 GLEN ELLYN ROAD, GLENDALE HEIGHTS, IL 60139

TITLE: E PMT DRAWING (1 OF 3)
DESIGN 53, SIZE N4, A/8
CW ROT., UB DISCH.

DR. KJH	08/14/17	DWG. NO.	
CK. AWG	08/21/17	340066-01-01	
CT.		REV E	

Issued by
RPP-WTP PDC

Mechanical Data Sheet: VESSEL

Plant Item No:
24590-BOF-MV-DEP-VSL-00004A/00004B

River Protection Project
Waste Treatment and Immobilization Plant

Data Sheet No: 24590-BOF-MVD-DEP-00005
Rev: 1

Project:	RPP-WTP	P&ID:	24590-BOF-M6-DEP-00004001/-00004002, Rev 1 (Ref. 1, 20)
Project No:	24590	Process Data:	24590-BOF-MVC-DEP-00007, Rev A (Ref. 2)
Project Site:	Hanford	Vessel Drawing:	24590-BOF-MV-DEP-00006001,-00007001 (Ref. 16, 17)

Description: Overhead Sampling Vessel

Reference Data

Charge Vessels (Tag Numbers)	None
Eductors (Tag Numbers)	24590-BOF-MP-DEP-EDUC-00006, -00007, -00008, -00009 (Ref. 14)
Nozzle (Tag Numbers)	24590-BOF-MN-DEP-NOZ-00005, -00006 (Ref. 1, 20)
RFDs/Pumps (Tag Numbers)	None

Design Data

Quality Level		CM	**Fabrication Specs**	24590-BOF-3PS-MVSC-T0003 (Ref. 4)		
Seismic Category		SC-IV	**Design Code**	ASME VIII Div 1		
Service/Contents		Process Radioactive Condensate	**Code Stamp**	Yes		
Specific Gravity of fluid (Min/Max)		0.99/1.05 (Ref. 2)	**NB Registration**	Yes		
Maximum Operating Volume	**gal**	36600 (Ref. 3)	**Weights (lbs)**	**Empty**	**Operating**	**Test**
Batch Volume	**gal**	23600 (Ref. 18)	**Actual**	*	*	*
Total Volume	**gal**	40800 (Ref. 3)	**Not to exceed wet weight (lbs)**	423,000		
Area Classification		R2/C1 (Ref. 8) (Note 11)	**Not to exceed size (Notes 1 and 2)**	16' Diameter x 46' High		

General Data

Inside Diameter	**feet**	14 (Ref. 3)		**Wind Design**	ASCE 7 - 1998
Length/Height (TL - TH)	**feet**	30.8 (Ref. 3)		**Snow Design**	ASCE 7 - 1998
	Vessel Operating	**Vessel Design**	**Coil/Jacket Design**	**Seismic Design**	24590-BOF-3PS-MVSC-T0003 (Ref. 4)
Internal Pressure (psig)	Full Vacuum/0 (Min/Max) (Ref. 2)	15 (Ref. 5, 6)	N/A	**Postweld Heat Treat**	Per Code
External Pressure (psig)	0	15 (Ref. 6)	N/A	**Corrosion/Erosion Allownce (inch)**	0.04 (Ref. 19)
Temperature (°F)	40/126 (Min/Max) (Ref. 2)	155 (Note 9) (Ref. 6)	N/A	**Head Type (Top and Bottom)**	2:1 Semi-Ellipsoidal
Min Design Metal Temp. (°F)	-23 (Ref. 10)			**Maximum Circulating Pump Discharge Pressure (psig)**	147 (Ref. 13)

Materials of Construction (Ref. 19)

Component	Material	Minimum Thickness/Size	Containment
Top Head	SA 240 304 (Note 7)	*	Auxillary
Shell	SA 240 304 (Note 7)	*	Primary
Bottom Head	SA 240 304 (Note 7)	*	Primary
Support	SA 240 304 (Note 7)	*	N/A
Jacket/Coils/Half-Pipe Jacket	SA 240 304 (Note 7)	N/A	N/A
Internals	SA 240 304/SA 312 TP304 (Note 7)	*	Thermocouples Primary
Internals - Spray Nozzle	Type 304L SS (Note 7)*	*	N/A
Internals - Piping	SA 312 TP304 Seamless (Note 7)	*	(Note 8)
Forgings/Bar Stock	SA 182 F304 (Note 7)	*	N/A
Gaskets	EPDM	N/A	N/A
Bolting	SA-193 Gr. B8M/SA-194 Gr. 8M	N/A	N/A

Vessel Connections (Ref. 1, 16, 17)

See Note 26

Miscellaneous Data

Orientation	Vertical	**Support Type (Note 3)**	Skirt
Insulation Function (Note 4)	Freeze Protection	**Insulation Material**	By Buyer
Insulation Thickness (inch)	3 (Ref. 1) (Note 4)	**Internal Finish**	Welds descaled as laid
		External Finish	Welds descaled as laid
DEP-VSL-00004A Spray Nozzle Preferred Operating Point (Pressure [psig], Flow [gpm])	*	**DEP-VSL-00004A Spray Nozzle Available Pressure at Design Flow (Pressure [psig], Flow [gpm])**	44.02, 105 (Ref. 7)
DEP-VSL-00004B Spray Nozzle Preferred Operating Point (Pressure [psig], Flow [gpm])	*	**DEP-VSL-00004B Spray Nozzle Available Pressure at Design Flow (Pressure [psig], Flow [gpm])**	43.85, 105 (Ref. 7)

Remarks

* To be determined/confirmed by the vendor

Note 1 - Not to exceed size diameter includes allowance for cooling jackets and side nozzle protrusion in addition to the vessel ID.

Note 2 - Not to exceed size height includes allowance for top manway and bottom skirt height dimension, from Top of Concrete (TOC) to bottom of vessel, in addition to total vessel height.

Note 3 - Skirt must be designed with 14'-0" Internal Diameter Ring Beam attachment in consideration.

Note 4 - Insulation is required on both the shell and top/bottom head of the vessel (by BUYER).

Note 5 - The contents of this document are Dangerous Waste Permit affecting.

Note 6 - Please note that source, special nuclear and byproduct materials, as defined in the Atomic Energy Act of 1954 (AEA), are regulated at the U.S. Department of Energy (DOE) facilities exclusively by DOE acting pursuant to its AEA authority. DOE asserts, that pursuant to the AEA, it has sole and exclusive responsibility and authority to regulate source, special nuclear, and byproduct materials at DOE-owned nuclear facilities. Information contained herein on radionuclides is provided for process description purposes only.

Note 7 - Max. Carbon content 0.030%.

Note 8 - Nozzle necks below the high operating liquid level are Primary, others Auxiliary.

Note 9 - Vessel design temperature is determined by adding 25 °F to the max vessel operating temperature and rounding up to the nearest 5 °F.

Note 10 - Deleted

Note 11 - This equipment is located in R2 radiation area (radiological buffer area) which is designed to have a target radiation level of less than 0.250 mrem/hr. The average contact dose rate for this equipment is 3.75E-04 Rad/hr. (Ref. 8, 10, and 11)

Note 12 - Deleted

Note 13 - Deleted.

Note 14 - Deleted.

Note 15 - Deleted.

Note 16 - Deleted.

Note 17 - Center line of nozzle N13 (Ref. 16, 17) for level instrumentation must be located at least 54" from the side wall of vessel to allow for stilling well placement.

Note 18 - Seller to provide access platform and ladders.

Note 19 - Vessel is not Black Cell/Hard-to-Reach.

Note 20 -Vessel Discharge Outlet nozzle (N11, Ref. 16, 17) to be flush with vessel bottom, centered on vessel, and fitted with a vortex breaker.

Note 21 - For nozzles N02, N03, N04, N08, N09 (Ref. 16, 17) Inlet lines to be extended into the vessel and directed away from the vessel walls in order to prevent liquid from flowing down the vessel walls.

Note 22 - All internal supports and welds that interact with the primary confinement barrier (vessel) shall maintain equal quality level and seismic category as the vessel.

Note 23 - For Nozzle N07 (Ref. 16, 17), spray nozzle to be located as close to the center of the top head as possible.

Note 24 - Vessel vent nozzle (N12, Ref. 16, 17) to be located at the center of the top head. Intake air nozzle (N06, Ref. 16, 17) to be located at a maximum radius within the crown region of the head.

Note 25 - Deleted.

Note 26 - Refer to 24590-BOF-MV-DEP-00006001,-00007001 for vessel details including dimension, nozzle schedule table and locations/orientations.

Revision History

Rev.	Description	Originator	Checker	MET Reviewed	Approver	Date
1	Issued for Procurment (to reuse UFP-VSL-00002A/B). Major Revision (Revision Bars Not Shown). No EIEs against this document.	Jung Shin Originator By: Jung Shin - jwshin1 Org Name: Bechtel National, Inc. Placed: Jun 26, 2017	Ryan Rickenbach Checked By: Ryan Rickenbach rzricken Org Name: Bechtel Placed: Jun 26, 2017	Reviewed No Comments By: Steven Hall - sewell Org Name: BNI Placed: Jun 27, 2017	Youssef Mohammad-Zadeh YM	6/30/17
0	Issued for Purchase. Impacts against this document have been evaluated and EIE, 24590-BOF-EIE-MS-16-0060, Rev. 0 is incorporated in this revision.	Jung Shin	Holden Carroll	Debbie Adler	Youssef Mohammad-Zadeh	1/18/2017

Attachment A – References for Mechanical Datasheet 24590-BOF-MVD-DEP-00005, Rev. 1
(For internal reference; except for Ref. 4, 14, 16, 17)

1. 24590-BOF-M6-DEP-00004001, Rev 2 - P&ID - BOF/EMF Direct Feed LAW EMF Process System Overhead Sampling Vessel DEP-VSL-00004A
2. 24590-BOF-MVC-DEP-00007, Rev A - Process Data for the Overhead Sampling Vessels (DEP-VSL-00004A/B) and Pumps (DEP-PMP-00004A/B/C)
3. 24590-BOF-MVC-DEP-00002, Rev A - Overhead Sampling Vessel (DEP-VSL-00004A/B) - Vessel Sizing, Vessel Overflow Nozzle Sizing, and Plant Wash System Sizing
4. 24590-BOF-3PS-MVSC-T0003, Rev 0 - Engineering Specification for DFLAW EMF Lag Storage and Overhead Sampling Vessels
5. 24590-BOF-M6C-DEP-00009, Rev B - Design Pressure and Temperature Calculation for the EMF DEP/DVP/AFR/NLD/SHR/SNR Systems
6. 24590-WTP-3DG-M40T-00001, Rev 0 - Design Parameters and Test Pressures for Equipment and Piping
7. 24590-BOF-M6C-PSW-00008, Rev B - EMF Process Service Water (PSW) Line Sizing (PIPE-FLO)
8. 24590-BOF-P1-25-00001, Rev 0 – Balance of Facilities LAW Effluent Process BLDG & LAW Effluent Drain Tank BLDG General Arrangement Plan at Elev 0 ft – 0 in
9. Deleted.
10. 24590-WTP-DB-ENG-01-001, Rev 5 – Basis of Design
11. 24590-WTP-Z0C-W13T-00010, Rev. G – Contact Dose Rates to Equipment From Beta and Gamma Emitters
12. Deleted.
13. 24590-BOF-MPC-DEP-00004, Rev A - BOF DEP Overhead Sampling Vessel Pump (DEP-PMP-00004A/B/C) Sizing and Line Sizing
14. 24590-BOF-MPD-DEP-00018, Rev 0 - 24590-BOF-MP-DEP-EDUC-00006, -00007, -00008, -00009 - Mixing Eductors for Atmospheric Vessels DEP-VSL-00004A/B
15. Deleted.
16. 24590-BOF-MV-DEP-00006001, Rev 1 - Equipment Assembly Overhead Sampling Vessel DEP-VSL-00004A
17. 24590-BOF-MV-DEP-00007001, Rev 1 - Equipment Assembly Overhead Sampling Vessel DEP-VSL-00004B
18. 24590-BOF-MVC-DEP-00009, Rev C - Batch Sizing Calculation of DEP (Direct Feed LAW Effluent Management Facility Process System) Vessels: DEP-VSL-00001, -00002, -00003A/B/C, -00004A/B, -00005A/B
19. 24590-BOF-N1D-DEP-00004, Rev 0 - DEP-VSL-00004A/B - Overhead Sampling Vessel Corrosion Evaluation
20. 24590-BOF-M6-DEP-00004002 - Rev 2 - P&ID - BOF/EMF Direct Feed LAW EMF Process System Overhead Sampling Vessel DEP-VSL-00004B

Mechanical Data Sheet: VESSEL

ISSUED BY
RPP-WTP PDC

River Protection Project
Waste Treatment and Immobilization Plant

Plant Item No:	24590-BOF-MV-DEP-VSL-00005A 24590-BOF-MV-DEP-VSL-00005B (1)
Data Sheet No:	24590-BOF-MVD-DEP-00006
Rev:	1

Project:	RPP-WTP	P&ID:	24590-BOF-M6-DEP-00006001, -00006002 (Ref. 1, 22) (1)
Project No:	24590	Process Data:	24590-BOF-MVC-DEP-00008 (Ref. 2) (1)
Project Site:	Hanford	Vessel Drawing:	24590-BOF-MV-DEP-00008001, -00008002, -00009001, -00009002 (Ref. 16, 17, 20, 21)

Description: Process Condensate Lag Storage Vessel

Reference Data

Charge Vessels (Tag Numbers)	None
Eductors (Tag Numbers)	24590-BOF-MP-DEP-EDUC-00010 through -00017 (Ref. 1,14, 22) (1)
Nozzle (Tag Numbers)	None
RFDs/Pumps (Tag Numbers)	None

Design Data

Quality Level	CM	**Fabrication Specs**	24590-BOF-3PS-MVSC-T0003 (Ref. 4)
Seismic Category	SC-IV	**Design Code**	ASME VIII Div 1
Service/Contents	Process Radioactive Condensate	**Code Stamp**	Yes **(Note 29)** (1)
Specific Gravity of Fluid (1)	0.99/1.05 **(Min/Max)** (Ref. 2)	**NB Registration**	Yes

Maximum Operating Volume	**gal**	108,208 (Ref. 3)	**Weights (lbs)**	**Empty**	**Operating**	**Test**
Batch Volume	**gal**	**95,228** (Ref. 3) (1)	**Actual**	*	*	*
Total Volume	**gal**	127,260 (Ref. 3)	**Not to exceed wet weight (lbs)**	1,285,000		
Area Classification		R2/C1 (Ref. 8) (Note 12)	**Not to exceed size (Notes 1 and 2)**	27' Diameter x 46' High		

General Data

Inside Diameter	**feet**	25 (Ref. 3)		**Wind Design**	ASCE 7 - 1998
Length/Height (TL - TL) (1)	**feet**	29.5 (Ref. 3)		**Snow Design**	ASCE 7 - 1998
	Vessel Operating	**Vessel Design**	**Coil/Jacket Design**	**Seismic Design**	24590-BOF-3PS-MVSC-T0003 (Ref. 4)
Internal Pressure (psig)	**-1.16**/0 (Min/Max) (Ref. **23**) (1)	15 (Ref. 6) (1)	N/A	**Postweld Heat Treat**	Per Code
External Pressure (psig)	0 **(Outdoor Environment Ref. 8)** (1)	15 (Ref. 6)	N/A	**Corrosion/Erosion Allownce (inch) (Ref. 19)**	0.04
Temperature (°F)	40/**125** (Min/Max) (Ref. 2) (1)	155 (Note 9) (Ref. 6)	N/A	**Head Type (Top and Bottom)**	100%-6% Flanged & Dished
Min Design Metal Temp. (°F)	-23 (Ref. 10)			**Maximum Circulating Pump Discharge Pressure (psig)**	142.48 (Ref. 13)

Materials of Construction (Ref. 19)

Component	Material	Minimum Thickness/Size	Containment
Top Head	SA 240 316 (Note 7)	*	Auxiliary (1)
Shell	SA 240 316 (Note 7)	*	Primary
Bottom Head	SA 240 316 (Note 7)	*	Primary
External Support such as Lifting Lugs and Vessel Skirt (1)	SA 240 3**04** (Note 7) (1)	*	N/A
Jacket/Coils/Half-Pipe Jacket	SA 240 316 (Note 7)	*	N/A
Internals	SA 240 316 / SA 312 TP316 (Note 7)	*	Thermocouples Primary
Wash Ring Pipe	SA 312 TP316 **Seamless** (Note 7) (1)	*	N/A
Internals - Piping	SA 312 TP316 Seamless (Note 7)	*	(Note 8)
Forgings/Bar Stock	SA 182 F316 (Note 7)	*	N/A
Gaskets	EPDM	N/A	N/A
Bolting	SA-193 Gr. B8M / SA-194 Gr. 8M	N/A	N/A

Vessel Connections (Ref. 1, 16, 17, 20, 21, 22)

See Note 28

Miscellaneous Data			
Orientation	Vertical	**Support Type (Note 3)**	Skirt
Insulation Function (Note 4)	Freeze Protection	**Insulation Material**	By Buyer
Insulation Thickness (inch)	3 (Ref. 1)	**Internal Finish**	Welds descaled as laid
		External Finish	Welds descaled as laid
DEP-VSL-00005A Wash Ring Available Pressure at Design Flow (Pressure [psig], Flow [gpm])	42.16, 105 (Ref. 7)		
DEP-VSL-00005B Wash Ring Available Pressure at Design Flow (Pressure [psig], Flow [gpm])	42.11, 105 (Ref. 7)		

Remarks

* To be determined/confirmed by the vendor

Note 1 - Not to exceed size diameter includes allowance for side nozzle protrusion in addition to the vessel ID.

Note 2 - Not to exceed size height includes allowance for top manway and bottom skirt height dimension, from Top of Concrete (TOC) to bottom of vessel, in addition to total vessel height.

Note 3 - Skirt must be designed with 25'-0" Internal Diameter Ring Beam attachment (provided by BUYER) in consideration.

Note 4 - Insulation (by BUYER) is required on both the shell and top/bottom head of the vessel.

Note 5 - The contents of this document are Dangerous Waste Permit affecting.

Note 6 - Please note that source, special nuclear and byproduct materials, as defined in the Atomic Energy Act of 1954 (AEA), are regulated at the U.S. Department of Energy (DOE) facilities exclusively by DOE acting pursuant to its AEA authority. DOE asserts, that pursuant to the AEA, it has sole and exclusive responsibility and authority to regulate source, special nuclear, and byproduct materials at DOE-owned nuclear facilities. Information contained herein on radionuclides is provided for process description purposes only.

Note 7 - Max. Carbon content 0.030%

Note 8 - Nozzle necks below the high operating liquid level are Primary, others Auxiliary.

Note 9 - Vessel design temperature is determined by adding 25 °F to the max vessel operating temperature and rounding up to the nearest 5 °F.

Note 10 - Deleted

Note 11 - Deleted

Note 12 - This equipment is located in R2 radiation area (radiological buffer area) which is designed to have a target radiation level of less than 0.250 mrem/hr. The average contact dose rate for this equipment is **3.1**E-04 Rad/hr. (Ref. 8, 10, and 11)

Note 13 - Deleted

Note 14 - Deleted

Note 15 - Deleted

Note 16 - Vessel is not Black Cell/Hard-to-Reach.

Note 17 - Deleted

Note 18 - Deleted

Note 19 - Deleted

Note 20 - Deleted

Note 21 - Seller to provide access platform and ladders.

Note 22 - Vessel Discharge Outlet nozzle (N80 **for DEP-VSL-00005A and N84 for DEP-VSL-00005B**) to be flush with vessel bottom **/ center wear plate**, centered on vessel, and fitted with a vortex breaker.

Note 23 - All internal supports and welds that interact with the primary confinement barrier (vessel) shall maintain equal quality level and seismic category as the vessel.

Note 24 - Deleted

Note 25 - Deleted

Note 26 - Deleted

Note 27 - Deleted

Note 28 - Refer to 24590-BOF-MV-DEP-00008001, -00008002, -00009001, -00009002 for vessel details including dimension, nozzle schedule table and locations/orientations.

Note 29 - Include a statement on the Manufacturer's Data Report that over-pressure protection is provided by the system design per ASME Section VIII, Division 1, UG-140(a).

Equipment Cyclic Data Sheet (ECDS) 1

Component Plant Item Number	DEP-VSL-00005A & DEP-VSL-00005B
Component Description	Process Condensate Lag Storage Vessel

The information below is provisional and envelopes operational duty for fatigue assessment. It is not to be used as operational data.

Materials of Construction	See Materials of Construction section above for details.
Design Life	40 years
Component Function and Life Cycle Description	DEP-VSL-00005A/B receive process condensate from DEP-VSL-00004A/B, and secondary steam blowdown from HPS-HX-00011. DEP-VSL-00005A/B allow for lag storage and characterization before sending to the LERF/ETF. Content agitation and mixing are maintained via eductors and recirculation system.

Load Type	**Min**	**Max**	**Number of Cycles**	**Comment**
Design Pressure (psig)	-15 (Ref. 6)	15 (Ref. 6)	10 (Ref. 23)	
Operating Pressure (psig)	See Comment	See Comment	0 (Ref. 23)	-1.16/0 (Min/Max) (Ref. 23). Range of pressure variations < 20% of design pressure.
Operating Temperature (°F)	See Comment	See Comment	88 (Ref. 23)	40/125 (Min/Max) (Ref. 2). Number of Cycles include 10% increase to account for commissioning duty.
Contents Specific Gravity	See Comment	See Comment	N/A	0.99/1.05 (Min/Max) (Ref. 2). Specific gravity is based on temperature and pressure.
Contents Level (inch)	0.0 (Ref. 3)	373.6 (Ref. 3)	14,600 (Ref. 23)	

Localized Features		
Internals	N/A	
Nozzles	N/A	
Supports	N/A	

Revision History

Rev.	Description	Originator	Checker	MET Reviewed	Approver	Date
0	Issued for Procurement (to reuse HLP-VSL-00027A/B). EIE, 24590-BOF-EIE-MS-16-0060 is incorporated.	Jung Shin	Ryan Rickenbach	Steven Vail	Youssef Mohammad-Zadeh	6/30/2017
1	Revised Batch Volume, Vessel Maximum Operating Temperature, Material for External Supports & Wash Ring Pipe, Notes 12 & 22, and reference #s 1, 2, 4, 6, 8, 10, 11, 16, 17, 18, 20, 21 & 22; Incorporated 24590-WTP-SDDR-MS-17-00121 rev.NA, 24590-BOF-EIE-PR-17-0006 rev.0, 24590-BOF-EIE-PR-17-0011 rev.0, and 24590-WTP-EIE-ENG-17-0018 rev.0; Added Note 29, ECDS section, and reference # 23.	Kar Wei (Sengwai) Chin Originator By: Kar Wei (Sengwai) Chin - kwchin Org Name: HLW Mechanical Systems Placed: Jan 22, 2018	Ryan Rickenbach Checked By: Ryan Rickenbach - rzrikken Org Name: Bechtel Placed: Jan 22, 2018	Debbie Adler Reviewed No Comments By: Debbie Adler - dadler Org Name: MET Placed: Jan 22, 2018	Youssef Mohammad-Zadeh YM	1/26/18

Attachment A – References for Mechanical Datasheet 24590-BOF-MVD-DEP-00006, Rev 1
(For internal reference; except for Ref. 4, 14, 16, 17, 20, 21)

1. 24590-BOF-M6-DEP-00006001, Rev 2 - P&ID - BOF/EMF Direct Feed LAW EMF Process System **Process Condensate** Lag Storage Vessel DEP-VSL-00005A 1
2. 24590-BOF-MVC-DEP-00008, Rev **0** - Process Data for the Process Condensate Lag Storage Vessels (DEP-VSL-00005A/B), Transfer Pumps (DEP-PMP-00005A/B), and Recirculation Pumps (DEP-PMP-00015A/B/C) 1
3. 24590-BOF-MVC-DEP-00004, Rev B - Process Condensate Lag Storage Vessel (DEP-VSL-00005A/B) - Vessel Sizing, Vessel Overflow Sizing, and Wash Ring Sizing
4. 24590-BOF-3PS-MVSC-T0003, Rev **1** - Engineering Specification for DFLAW EMF Lag Storage and Overhead Sampling Vessels 1
5. 24590-BOF-M6C-DEP-00009, Rev B - Design Pressure and Temperature Calculation for the EMF DEP/DVP/AFR/NLD/SHR/SNR Systems
6. 24590-WTP-3DG-M40T-00001, Rev **1** - Design Parameters and Test Pressures for Equipment and Piping 1
7. 24590-BOF-M6C-PSW-00008, Rev B - EMF Process Service Water (PSW) Line Sizing (PIPE-FLO)
8. 24590-BOF-P1-25-00001, Rev **1** – Balance of Facilities LAW Effluent Process BLDG & LAW Effluent Drain Tank BLDG General Arrangement Plan at Elev**. 0'-0"** 1
9. Deleted.
10. 24590-WTP-DB-ENG-01-001, Rev **6** – Basis of Design 1
11. 24590-WTP-Z0C-W13T-00010, Rev. **H** – Contact Dose Rates to Equipment From Beta and Gamma Emitters 1
12. Deleted.
13. 24590-BOF-MPC-DEP-00008, Rev A - DEP Process Condensate Lag Storage Vessel Recirculation Pump (DEP-PMP-00015A/B/C) Sizing and Line Sizing
14. 24590-BOF-MPD-DEP-00019, Rev 0 - 24590-BOF-MP-DEP-EDUC-00010, -00011, -00012, -00013, -00014, -00015, -00016, -00017 - Mixing Eductors for Atmospheric Vessels DEP-VSL-00005A/B
15. Deleted.
16. 24590-BOF-MV-DEP-00008001, Rev **2** - **Design Proposal Drawing** Equipment Assembly Process Condensate Lag Storage Vessel DEP-VSL-00005A 1
17. 24590-BOF-MV-DEP-00009001, Rev **2** - **Design Proposal Drawing** Equipment Assembly Process Condensate Lag Storage Vessel DEP-VSL-00005B 1
18. **Deleted.** 1
19. 24590-BOF-N1D-DEP-00005, Rev 0 - DEP-VSL-00005A/B - Process Condensate Lag Storage Vessel A & B
20. 24590-BOF-MV-DEP-00008002, Rev **1** - **Design Proposal Drawing** Equipment Assembly Process Condensate Lag Storage Vessel DEP-VSL-00005A 1
21. 24590-BOF-MV-DEP-00009002, Rev **1** - **Design Proposal Drawing** Equipment Assembly Process Condensate Lag Storage Vessel DEP-VSL-00005B 1
22. 24590-BOF-M6-DEP-00006002, Rev 2 - P&ID - BOF/EMF Direct Feed LAW EMF Process System **Process Condensate** Lag Storage Vessel DEP-VSL-00005B 1
23. **24590-BOF-MVC-M80T-00001, Rev A - DFLAW EMF Vessel Cyclic Datasheet Inputs and Fatigue Evaluation** 1

Issued by
RPP-WTP PDC

☐ Yes ☒ No **THIS DOCUMENT CONTAINS EXPORT CONTROLLED INFORMATION, SEE BASE DOCUMENT FOR FULL LABEL AND RESTRICTIONS**

Supplier Deviation Disposition Request

PROJECT: Hanford Tank Waste Treatment and Immobilization Plant (WTP Project) **JOB No.:** 24590

FOR WTP USE

WTP SDDR No.	Rev.	DATE RECEIVED
24590-WTP-SDDR-MS-18-00024	N/A	02/28/2018

FOR SUPPLIER USE

SUPPLIER SDDR No.	DATE SUBMITTED
POA07-9	2-27-2018

1. Supplier Name	Address	City & State	Zip
Harris Thermal Transfer Products	615 S. Springbrook Rd.	Newberg, OR	97132

2. Supplier's Order No.	**3. WTP P.O. or SC**	Rev
27200, 27201, 27202 and 27203	24590-CM-POA-MVSC-00007	2

4. Deviation Description (Attach extra sheets, photographs, sketches, etc. as necessary and identify quantity and serial numbers as applicable)

The not-to-exceed wet weight of the vessels is listed as 1,285,000 lbs for DEP-VSL-00005A/B and 423,000 lbs for DEP-VSL-00004A/B. These weights are contrary to the other design data provided in the datasheets which require the vessel weights to exceed the not to exceed value. The actual operating values are 1,359,800 lbs and 486,900 lbs respectively.

4a. Supplier's NCR; (See instructions for applicability) Number: N/A

5. Supplier's Proposed Disposition: ☒ Use As-Is ☐ Repair ☒ Modify WTP Requirement

6. Supplier's Estimated Cost Impact: None **7. Supplier's Estimated Schedule Impact:** None

8. Proposed Disposition and Technical Justification (plus Cost/Schedule if applicable): (Attach extra sheets, sketches, etc., as necessary.)

Proposed disposition is to remove the not-to-exceed values from the datasheets. Previous project datasheets did not provide not-to-exceed values, e.g. 24590-PTF-MVD-HLP-00007 and 24590-PTF-MVD-UFP-00014, therefore, for consistency and because actual values have been provided on the datasheet, the not-to-exceed values can be removed.

9. Supplier's Authorized Representative	Signature
Eric Groenweghe	
Title	Date
General Manager	2-17-2018

10. WTP Engineering Action ☒ Approved ☐ Disapproved ☐ See Below

Distribution: Procurement & Subcontracts Construction

Title of SDDR: Remove Not-to-exceed values from DEP-VSL-00004A/B and DEP-VSL-00004A/B datasheets.

NOTES:
1. Complete instructions provided at end of form.
2. Items 1 through 9 and 14 to be completed by Supplier.
3. Items 10 through 13 and 15 to be completed by WTP.
4. Non-applicable items to be marked "N/A."
5. Attach additional information whenever necessary.
6. WTP must be notified within 5 days after detection of deviation.
7. Select "Yes" if the SDDR contains or references ECI documents.

Supplier Deviation Disposition Request
Engineering Disposition

PROJECT: Hanford Tank Waste Treatment and Immobilization Plant (WTP Project) **JOB NO.: 24590** **SDDR:** 24590-WTP-SDDR-MS-18-00024 **Rev.** N/A

Remove Not-to-exceed values from DEP-VSL-00004A/B and DEP-VSL-00004A/B datasheets.

11. WTP Procurement & Subcontracts Action: Commercial Terms Impact:

☐ Yes *This SDDR grants relief from requirements or changes the requirements and; check each (consideration) item that applies:*

- ☐ Modifications to governing terms are required and/or;
- ☐ An increase in price is requested by Seller and/or;
- ☐ A price credit from the Supplier is due and/or;
- ☐ An increase/decrease in the Seller promise delivery date is required.
- ☐ Cost impact, if any is subject to a separate approval process as required by the changes clause.

☒ No *This SDDR grants relief from requirements or changes the requirements and all of the following apply:*

- No commercial impact (No modification of governing commercial terms is required) and;
- No increase in price is requested by Seller and;
- No decrease in price is anticipated or required by Buyer and;
- No extension of promised shipment is required

12. WTP Disposition Statement (Attach extra sheets, sketches, etc., as necessary).

WTP agrees that the not-to-exceed (NTE) values shown on the datasheets, 24590-BOF-MVD-DEP-00005 and 24590-BOF-MVD-DEP-00006, are not required and can be removed from the datasheets. The vessels included in datasheets, DEP-VSL-00004A/B and DEP-VSL-00005A/B, respectively, were originally designed and fabricated for use in the PTF.

Does SDDR request an exception/deviation from a code or standard Identified in the WTP Code of Record (24590-WTP-COR-MGT-15-00001) ☐ Yes ☒ No

WTP Justification (Attach extra sheets, sketches, etc., as necessary).

Is the change associated with a Q SSC? ☐ Yes ☒ No

WTP defined the vessel dimensional requirements/parameters and fluid specific gravities in WTP vessel drawings and datasheets. The vendor is required to provide the vessel weights based on detailed design of the vessels. See drawings 24590-BOF-MV-DEP-00006001, 24590-BOF-MV-DEP-00007001, 24590-BOF-MV-DEP-00008001, and 24590-BOF-MV-DEP-00009001 and datasheets 24590-BOF-MVD-DEP-00005 and 24590-BOF-MVD-DEP-00006. Vendor has calculated the weights in submittals 24590-CM-POA-MVSC-00007-03-00001 and 24590-CM-POA-MVSC-00007-03-00002.

REQUIREMENTS REVIEW

Client Approval Required*	☐ Yes ☒ No	Interface Resolution Required*	☐ Yes ☒ No

*Address these "yes" answers in the WTP Disposition Statement (above).

Affected WTP Documents:

NOTES:

1. Complete instructions provided at end of form.
2. Items 1 through 9 and 14 to be completed by Supplier.
3. Items 10 through 13 and 15 to be completed by WTP.
4. Non-applicable items to be marked "N/A."
5. Attach additional information whenever necessary.
6. WTP must be notified within 5 days after detection of deviation.
7. Select "Yes" if the SDDR contains or references ECI documents.

Supplier Deviation Disposition Request
Engineering Disposition

PROJECT: Hanford Tank Waste Treatment and Immobilization Plant (WTP Project) **JOB NO.:** 24590 **SDDR:** 24590-WTP-SDDR-MS-18-00024 **Rev.** N/A

Title of SDDR: Remove Not-to-exceed values from DEP-VSL-00004A/B and DEP-VSL-00004A/B datasheets.

Document Number	Rev	Remarks	Specification Retroactive? Yes	Specification Retroactive? No	Incorporation by Design Change	Incorporation by Reference
24590-BOF-MVD-DEP-00005	001	Remove NTE values	☐	☐	☒	☐
24590-BOF-MVD-DEP-00006	001	Remove NTE values	☐	☐	☒	☐
			☐	☐	☐	☐

Affected Supplier Submittals:

Document Number	Rev	Document Number	Rev
24590-CM-POA-MVSC-00007-08-00001	00A	24590-CM-POA-MVSC-00007-08-00002	00A

Reference Documents:

Document Number	Rev	Document Number	Rev
24590-PTF-MVD-HLP-00007	008	24590-PTF-MVD-HLP-00008	009
24590-PTF-MVD-UFP-00014	011	24590-PTF-MVD-UFP-00015	011
24590-CM-POA-MVSC-00007-03-00001	00B	24590-CM-POA-MVSC-00007-03-00002	00B
24590-BOF-MV-DEP-00006001	001	24590-BOF-MV-DEP-00007001	001
24590-BOF-MV-DEP-00008001	002	24590-BOF-MV-DEP-00009001	002

13. WTP Disposition Approval:

	Print/Type Name	Signature	Date
RE/Originator:	Ryan Rickenbach	Originator By: Ryan Rickenbach - rzricken Org Name: Bechtel Placed: Feb 28, 2018	
Checker:	Sengwai Chin	Checked By: Kar Wei (Sengwai) Chin - kwchin Org Name: HLW Mechanical Systems Placed: Mar 05, 2018	
Procurement & Subcontracts Representative:	Philip Ang	Reviewed No Comments By: Philip Ang - fpang Org Name: WTP Placed: Mar 06, 2018	
Reviewer:	Aftab Jeffrey	Reviewed No Comments By: Manuel Rosario - merosari Org Name: Bechtel Placed: Mar 08, 2018	
Reviewer:	Tracy Hawkins	Reviewed No Comments By: Tracy Hawkins - mthawkin Org Name: Engineering Placed: Mar 12, 2018	
Approver(s):	Stan Crow	SRCrow	3/12/18

NOTES:
1. Complete instructions provided at end of form.
2. Items 1 through 9 and 14 to be completed by Supplier.
3. Items 10 through 13 and 15 to be completed by WTP.
4. Non-applicable items to be marked "N/A."
5. Attach additional information whenever necessary.
6. WTP must be notified within 5 days after detection of deviation.
7. Select "Yes" if the SDDR contains or references ECI documents.

Supplier Deviation Disposition Request
Engineering Disposition

PROJECT: Hanford Tank Waste Treatment and Immobilization Plant (WTP Project) **JOB NO.: 24590** **SDDR:** 24590-WTP-SDDR-MS-18-00024 **Rev.** N/A

Title of SDDR: Remove Not-to-exceed values from DEP-VSL-00004A/B and DEP-VSL-00004A/B datasheets.

Supplier Acknowledgement:

The Supplier accepts the WTP's disposition herein and agrees to implement the WTP's disposition accordingly. Return the signed SDDR to the WTP Project Document Control (PDC).

14. Supplier			
	Print/Type Supplier Representative Name and Position	*Signature*	*Date*

WTP Supplier Quality Representative Release for Shipment:

The SQR confirms through reviewing, observing, or monitoring that the SDDR has been incorporated or implemented for the applicable material or equipment for shipment.

15. SQR			
	Print/Type Supplier Quality Representative Name and Position	*Signature*	*Date*

Please note that source, special nuclear, and byproduct materials, as defined in the Atomic Energy Act of 1954 (AEA) are regulated at the U. S. Department of Energy (DOE) facilities exclusively by DOE acting pursuant to its AEA authority. DOE asserts that pursuant to AEA, it has sole and exclusive responsibility and authority to regulate source, special nuclear, and byproduct materials at DOE-owned nuclear facilities. Information contained herein on radionuclides is provided for process description purposes only.

NOTES:
1. Complete instructions provided at end of form.
2. Items 1 through 9 and 14 to be completed by Supplier.
3. Items 10 through 13 and 15 to be completed by WTP.
4. Non-applicable items to be marked "N/A."
5. Attach additional information whenever necessary.
6. WTP must be notified within 5 days after detection of deviation.
7. Select "Yes" if the SDDR contains or references ECI documents.

DVP Primary Exhaust HEPA Filter Housing Datasheet: 24590-BOF-MKD-DVP-00003

MR No.	24590-QL-MRA-MKH0-00018
Plant Item No.	24590-BOF-MK-DVP-HEPA-00003A/B
Rev. No.	2

1	Project	RPP-WTP	Bldg./Rm #	**EMF / E-0102A**	Manufacturer	Camfil Farr
2	Project No.	24590	Supporting Calculations	**24590-BOF-MAC-DVP-00001**		
3	Site	DOE Hanford			Manufacturer Part No.	CF-FB-R-12-12P-316L (SP) *
4	Safety Class	**Non-Safety**	Associated Drawings	**24590-BOF-M6-DVP-00001001**		
5	Seismic Category	**SC-IV**		**24590-BOF-P1-25-00001**	Quantity Required	2
6	System No.	**DVP**	Specifications	**24590-BOF-3PS-MKH0-T0001**	Quality Level	**CM (Note 9)**
7	System Description	**24590-BOF-3ZD-25-00001**				
8	Description	**Process Ventilation Exhaust HEPA Filter and Housing**				

9	**DESIGN CONDITIONS**			
10	Inlet Air Temp. °F DB	143 [2.1]	Housing Interior Chemical Exposure	Note 4
11	Site Storage Conditions - Summer °F DB	113 [1.1]	Radiological dose rate (mrem/hr)	0.5[1.2, 6]
12	Site Storage Conditions - Winter °F DB	(-)23 [1.1]	Rad dose for 40-yr facility life (rem/40 yr)	175
13	**PERFORMANCE RATING**			
14	Design Flow Rate (ACFM)	160 [2.2]	Max. Allow. Leakage (CFM/housing)	0.0002 cfm - See Note 6 *
15	Max Velocity thru Filter Media (ft/min)	**5**	Maximum Design Temperature (°F DB)	195 [7]
16	Operating Pressure (psig)	(-)1 [7]	Leak Test Pressure (psig, initial)	(-) 1.25 [Note 6]
17	Design Pressure (psig)	15 [Note 8]	Housing Press. Drop w/ Clean Filters (psig)	*
18	Total Filter Openings Required	N/A	Housing Weight without HEPA Filters (lbs)	≈200 *
19	No. Filters per Bank	1		
20	**CONSTRUCTION**			
21	Design Housing Manufacturer	Camfil Farr	Design Housing Model Number	CF-FB-R-12-12P-316L (SP) *
22	Housing Construction Method	All Welded	Max. Housing Dim. (in.) - Note 2	L =37 / H = 29 / W = 33
23	Housing Material	316 / 316L / 316 (max 0.030% C; dual certified) - Note 12	Housing Material Gauge	11 Ga
24	Top Panel Material	N/A	Top Panel Material Gauge	N/A
25	Structural Frame Material	N/A	Structural Frame Features	N/A
26	Inlet Plenum Total Volume	0.045 ft^3 *	Outlet Plenum Total Volume	0.045 ft^3 *
27	Inlet Position (Top/Side)	Side	Outlet Position (Top/Side)	Side
28	Inlet Nozzle Dimensions (inches)	sch 40, 4 in. Diameter	Outlet Nozzle Dimensions (inches)	sch 40, 4 in. diameter
29	Inlet Connection Type	Welded	Outlet Connection Type	Welded
30	Inlet Flange Bolt Required	N/A	Outlet Flange Bolts Required	N/A
31	Inlet Flange Bolt Size	N/A	Outlet Flange Bolt Size	N/A
32	Inlet Flange Bolt Material	N/A	Outlet Flange Bolt Material	N/A
33	Inlet Flange Gasket Material	N/A	Outlet Flange Gasket Material	N/A
34	Paint and Finish Material	N/A	Seal Type	Knife edge gel seal
35	**HOUSING ACCESSORIES**			

	Accessory Provided	Yes	No	Accessory Information	
37	Test w/ Inlet Isolation Damper		X	Damper Provided By	N/A
38				Inlet Isolation Damper Type	N/A
39				Inlet Isolation Damper Size	N/A
40	Inlet Transition Piping	X		Inlet Transition Piping Overall Length (in.)	*
41				Inlet Transition Smallest Inside Dimension (in.)	sch 40, 4 in. pipe - See Note 3
42				Inlet Transition Largest Inside Dimension (in.)	sch 40, 4 in. pipe - See Note 3
43	Inlet Aerosol Test Port Criteria	X		Challenge Aerosol Injection Port Connection Type	NPT
44				Challenge Aerosol Injection Port Connection Size	3/4 inch
45				Challenge Aerosol Injection Port Connection Quantity	1
46				Challenge Aerosol Sample Port Connection Type	NPT
47				Challenge Aerosol Sample Port Connection Size	3/8 inch
48				Challenge Aerosol Sample Port Connection Quantity	1
49	Inlet Viewing Ports		X	Total Number of Viewing Ports Required	N/A
50				Inlet Viewing Port Type	N/A
51				Inlet Viewing Port Locations	N/A
52				Inlet Viewing Port Dimensions (in.)	L = N/A / W = N/A
53	Internal Fire Suppression		X	Fire Suppression System Description	N/A
54	Vacuum-Relief Vent Assembly		X	Number Required	N/A
55				Vacuum-Relief Vent Assembly Setpoint	N/A
56				Vacuum-Relief Vent Assembly Manufacturer	N/A
57				Vacuum-Relief Vent Model Number	N/A

DVP Primary Exhaust HEPA Filter Housing Datasheet: 24590-BOF-MKD-DVP-00003

			MR No.	24590-QL-MRA-MKH0-00018		
			Plant Item No.	24590-BOF-MK-DVP-HEPA-00003A/B		Rev. No. 2
1	Project	RPP-WTP	Bldg./Rm #	EMF / E-0102A	Manufacturer	Camfil Farr
2	Project No.	24590	Supporting Calculations	24590-BOF-MAC-DVP-00001		
3	Site	DOE Hanford			Manufacturer Part No.	CF-FB-R-12-12P-316L (SP) *
4	Safety Class	**Non-Safety**	Associated Drawings	24590-BOF-M6-DVP-00001001		
5	Seismic Category	**SC-IV**		24590-BOF-P1-25-00001	Quantity Required	2
6	System No.	**DVP**	Specifications	24590-BOF-3PS-MKH0-T0001	Quality Level	**CM (Note 9)**
7	System Description	**24590-BOF-3ZD-25-00001**				
8	Description	**Process Ventilation Exhaust HEPA Filter and Housing**				

58 HOUSING ACCESSORIES (continued)

59	Accessory Provided	Yes	No	Accessory Information		
60	Test w/ Outlet Isolation Damper		X	Damper Provided By	N/A	
61				Outlet Isolation Damper Type	N/A	
62				Outlet Isolation Damper Size	N/A	
63	Outlet Transition Piping	X		Outlet Transition Piping Overall Length (in.)	*	
64				Outlet Transition Smallest Inside Dimension (in.)	sch 40, 4" pipe - See Note 3	
65				Outlet Transition Largest Inside Dimension (in.)	sch 40, 4" pipe - See Note 3	
66	Outlet Aerosol Test Port Criteria	X		Challenge Aerosol Sample Port Connection Type	NPT	
67				Challenge Aerosol Sample Port Connection Size	3/8 inch	
68				Challenge Aerosol Sample Port Connection Quantity	1	
69	Outlet Viewing Ports		X	Total Number of Viewing Ports Required	N/A	
70				Outlet Viewing Port Type	N/A	
71				Outlet Viewing Port Locations	N/A	
72				Outlet Viewing Port Dimensions (in.)	L = N/A	W = N/A
73	Differential Pressure Taps	X		Differential Pressure Tap Size (inches)	1/2	
74	Drain Connection	X		Drain Connection Size (inches)	3/4	
75	Drain Connection Valve		X	Drain Connection Valve Size (inches)	N/A	
76	Lifting Lugs	X		PVC Safe Change Bag Type	*	
77	Mounting Legs	X				

78 UTILITY REQUIREMENTS

79	Electrical (volts/phase/hertz)	N/A
80	Compressed Air	N/A
81	Intrumentation Taps	N/A
82	Pressure/Leak Test Ports	N/A
83	Air/Aerosol Mixing Test Ports	N/A

84 **Notes:**

85 1.) Vendor to fill in or re-confirm data in cells with (*) asterisk. N/A means not applicable. Source references for inputs are identified in brackets [ ] and are for BNI internal use only. Supporting calculations, associated drawings, and system description are for BNI internal use only.

86 2.) Not to exceed housing dimensions. Vendor to provide actual dimensions.

87 3.) Vendor to provide inlet/outlet transition from housing to connect to 4 inch nominal diameter type 316L SS pipe.

88 4.) The total inorganic constituents of potential concern (COPC) emissions from the DVP System unabated streams are 0.104 g/sec [4.1].

89 The radionuclide COPC Emissions from the DVP System are the following [4.2]:

90	Radionuclide	Unabated Emissions (Ci/yr)	Percent Contribution (%)
91	137Cs	5.27E-02	1%
92	137mBA	4.98E-02	1%
93	14C	1.82E-01	3%
94	151Sm	2.75E+00	38%
95	241Pu	6.45E-02	1%
96	63Ni	1.10E-01	2%
97	90Sr	1.97E+00	27%
98	90Y	1.97E+00	27%
99	Other	9.10E-02	1%
100	TOTAL	7.24E+00	100%

101 5.) Equipment shall be designed for a minimum useful life of 40 years.

102 6.) Max allowable leakage (CFM) = .003 * (Housing Volume (ft^3)) / 60 minutes @ leak test pressure of 1.25 * (Operating Pressure)

DVP Primary Exhaust HEPA Filter Housing Datasheet: 24590-BOF-MKD-DVP-00003

MR No.	24590-QL-MRA-MKH0-00018
Plant Item No.	24590-BOF-MK-DVP-HEPA-00003A/B
Rev. No.	2

1	Project	RPP-WTP	Bldg /Rm #	EMF / E-0102A	Manufacturer	Camfil Farr
2	Project No.	24590	Supporting Calculations	24590-BOF-MAC-DVP-00001		
3	Site	DOE Hanford			Manufacturer Part No.	CF-FB-R-12-12P-316L (SP) *
4	Safety Class	Non-Safety	Associated Drawings	24590-BOF-M6-DVP-00001001		
5	Seismic Category	SC-IV		24590-BOF-P1-25-00001	Quantity Required	2
6	System No.	DVP	Specifications	24590-BOF-3PS-MKH0-T0001	Quality Level	CM (Note 9)
7	System Description	24590-BOF-3ZD-25-00001				
8	Description	Process Ventilation Exhaust HEPA Filter and Housing				

Notes (Continued):

7.) Input values are taken directly from their source documents. There is no additional margin added to values on this datasheet.

8.) Based on the maximum design pressure unit commercially available.

9.) Quality Level is CM but remains Air Permit affecting. The design will meet ASME AG-1 requirements (Ref. 8)

10.) All materials shall be fully identified by ASME/ASTM standard and type/grade or UNS.

11.) Contents of this document are Dangerous Waste Permit affecting.

12.) Springs in the filter clamping mechanism may be 300 series stainless steel.

References (BNI Internal Use Only):

1.) 24590-WTP-DB-ENG-01-001, Rev. 6 [No changes to the items listed below due to the BOD revision]

1.1 Table 4-7, Pg. 4-5 - Max and Min Ambient Air Temperatures

1.2 Table 5-1, Pg. 5-4 - R2 Area Max Dose

1.3 Deleted.

2.) 24590-BOF-MAC-DVP-00001, Rev. B

[Rev.1-Four EIEs against this calc address system changes; **24590-BOF-EIE-MS-17-0018, Rev. 1** reflects the current design.

That EIE states that the deletion of DVP-HEPA-00002A/B and the addition of the turbine flow meters on the inlets of **DEP-VSL-00003A/B/C** is to be addressed.

These changes do not affect the overall system flow, line size, or the housing pressure design, Review of the other EIE's indicates no impacts.]

2.1 Section 7.1, Pg. 6

2.2 Table 8.2.1

3.) Deleted.

4.) 24590-BOF-M4C-DEP-00001, Rev. B

[Rev.1- **24590-BOF-EIE-PR-16-0006, Rev.0** updates batch sizes for DEP-VSL-00004A/B and -00005A/B. The change in the batch size due to the additional condensate dose not affect the design of this housing. **24590-BOF-EIE MS-17-0018, Rev. 1** results in a 1 (one) lb/hr mass flow decrease which has no affect on the design of the housing.

4.1 Table 8-6

4.2 Table 8-1

5.) 24590-BOF-M6C-DVP-00001, Rev. B, Attachment D

[Rev. 1 - The line size for the housing was not affected by the calc revision. There are no EIE's posted against this calc]

6.) 24590-BOF-P1-25-00001, Rev. 1 [Rev. 1 - The incorporated DCNs in Rev 1 of the drawing do not affect this filter housing]

7.) 24590-BOF-M6C-DEP-00009, Rev. B, Pg. A-19

[Rev.1- Of 16 listed EIEs, only two affect DVP. Those two are **24590-BOF-EIE-MS-17-0017, Rev. 0** which says, under Impacts, that this calc is not impacted.

For **24590-BOF-EIE-MS-17-0018, Rev. 1** a minor change in operating pressure is noted which does not affect this design. Therefore, there are no EIE impacts]

8.) 24590-BOF-QDF-MS-17-0001, Rev. 0, Effluent Management Facility (EMF) Vessel Vent Process System (DVP) Air Permit-Affecting SSCs

Please note that source, special nuclear, and byproduct materials, as defined in the Atomic Energy Act of 1954 (AEA) are regulated at the U. S. Department of Energy (DOE) facilities exclusively by DOE acting pursuant to its AEA authority. DOE asserts that pursuant to AEA, it has sole and exclusive responsibility and authority to regulate source, special nuclear, and byproduct materials at DOE-owned nuclear facilities. Information contained herein on radionuclides is provided for process description purposes only.

Rev	Description	Originator	ES&H	Checker	Reviewer	Approver	Date
2	1) Revised to correct the equipment Tag Number from Ref. 2 and editorial changes. 2) Incorporated 24590-WTP-SDDR-MS-17-00065. 3) Incorporated EIE 24590-WTP-EIE-ENG-17-0018, Rev. 0 and has no impact to this data sheet because the EIE description of change did not impact process stream DEP15 which is for this equipment process stream.	Originator By: Thang E. Thawn - trthawe Org Name: Bechtel Placed: Mar 29, 2018 T. Thawn	N/A	Checked By: Tayar Kyu - tmkyu Org Name: Placed: Mar 29, 2018 T. Kyu	N/A	Y. Mohammad-Zadeh	3/29/18
1	Revised to change Quality Level from Q to CM per 24590-BOF-QDF-MS-17-0001. Updated Ref. revs. Incorp'd EIE 24590-BOF-EIE-MS-17-0060, Rev. 0; incorporated SDDR 24590-WTP-SDDR-MS-17-00028.	M/. Silver	N/A	T. Fogle	N/A	Y. Mohammad-Zadeh	9/14/2017
0	Issued for Purchase Information added from Bid Margin was not reduced	R. Preston	N/A	H. Hendricks	N/A	Y. Mohammed-Zadeh	3/1/2017

Issued by
RPP-WTP PDC

Supplier Deviation Disposition Request
Engineering Disposition

PROJECT: Hanford Tank Waste Treatment and Immobilization Plant (WTP Project) **JOB NO.:** 24590 **SDDR:** 24590-WTP-SDDR-MS-17-00065 **Rev.** N/A

Title of SDDR: DVP HEPA Filter Housing Closure Knob Material Change

Supplier Acknowledgement:

The Supplier accepts the WTP's disposition herein and agrees to implement the WTP's disposition accordingly. Return the signed SDDR to the WTP Project Document Control (PDC).

14. Supplier	Patrick Smith *Print/Type Supplier Representative Name and Position*	*Signature*	10-16-17 *Date*

WTP Supplier Quality Representative Release for Shipment:

The SQR confirms through reviewing, observing, or monitoring that the SDDR has been incorporated or implemented for the applicable material or equipment for shipment.

15. SQR	*Print/Type Supplier Quality Representative Name and Position*	*Signature*	*Date*

RPP-WTP
RECEIVED

10/16/2017

BY PDC

Please note that source, special nuclear, and byproduct materials, as defined in the Atomic Energy Act of 1954 (AEA) are regulated at the U. S. Department of Energy (DOE) facilities exclusively by DOE acting pursuant to its AEA authority. DOE asserts that pursuant to AEA, it has sole and exclusive responsibility and authority to regulate source, special nuclear, and byproduct materials at DOE-owned nuclear facilities. Information contained herein on radionuclides is provided for process description purposes only.

NOTES:
1. Complete instructions provided at end of form.
2. Items 1 through 9 and 14 to be completed by Supplier.
3. Items 10 through 13 and 15 to be completed by WTP.
4. Non-applicable items to be marked "N/A."
5. Attach additional information whenever necessary.
6. WTP must be notified within 5 days after detection of deviation.
7. Select "Yes" if the SDDR contains or references ECI documents.

Issued by
RPP-WTP PDC

☐ Yes ☒ No THIS DOCUMENT CONTAINS EXPORT CONTROLLED INFORMATION, SEE BASE DOCUMENT FOR FULL LABEL AND RESTRICTIONS

Supplier Deviation Disposition Request

PROJECT: Hanford Tank Waste Treatment and Immobilization Plant (WTP Project) JOB No.: 24590

FOR WTP USE		
WTP SDDR No.	Rev.	DATE RECEIVED
24590-WTP-SDDR-MS-17-00065	N/A	8-03-2017

FOR SUPPLIER USE	
SUPPLIER SDDR No.	DATE SUBMITTED
S17-0114-ICR-008	8/3/17

1. Supplier Name	Address	City & State	Zip
Pajarito Scientific Corporation	60 Leonard Drive	Groton, CT	06340

2. Supplier's Order No.	3. WTP P.O. or SC	Rev
S17-0114	24590-CD-POA-MKH0-00018	~~0~~ 1 MKS 9/26/2017

4. Deviation Description (Attach extra sheets, photographs, sketches, etc. as necessary and identify quantity and serial numbers as applicable)

S17-0114-VDS-014, Shop Detail Drawings, Sheet 1 of 2 calls for all hardware to be 300 series SST with Aluminum star knobs. 24590-BOF-3PS-MKH0-T0001, Section 4.2.1 lists aluminum as a prohibited material. These knobs are used outside of the immediate pressure boundary and are needed to secure the lid of the housing. Stainless steel knobs are not used due to potential galling issues.

4a. Supplier's NCR: (See instructions for applicability) Number: N/A

5. Supplier's Proposed Disposition: ☐ Use As-Is ☐ Repair ☒ Modify WTP Requirement

6. Supplier's Estimated Cost Impact: None

7. Supplier's Estimated Schedule Impact: None

8. Proposed Disposition and Technical Justification (plus Cost/Schedule if applicable): (Attach extra sheets, sketches, etc., as necessary.)

The aluminum star knobs proposed are a standard item used on these style housings and we request that they be approved for use on this application.

9. Supplier's Authorized Representative	Signature
Name: Frank Conahan	
Title	Date
Director of Engineering	8/2/2017

10. WTP Engineering Action ☒ Approved ☐ Disapproved ☐ See Below

Distribution: Procurement & Subcontracts, Construction

NOTES:
1. Complete instructions provided at end of form.
2. Items 1 through 9 and 15 to be completed by Supplier.
3. Items 10 through 14 and 16 to be completed by WTP.
4. Non-applicable items to be marked "N/A."
5. Attach additional information whenever necessary.
6. WTP must be notified within 5 days after detection of deviation.
7. Select "Yes" if the SDDR contains or references ECI documents.

Supplier Deviation Disposition Request
Engineering Disposition

PROJECT: Hanford Tank Waste Treatment and Immobilization Plant (WTP Project) **JOB NO.: 24590** **SDDR:** 24590-WTP-SDDR-MS-17-00065 **Rev.** N/A

Title of SDDR: DVP HEPA Filter Housing Closure Knob Material Change

11. WTP Procurement & Subcontracts Action: Commercial Terms Impact:

☐ Yes *This SDDR grants relief from requirements or changes the requirements and; check each (consideration) item that applies:*

- ☐ Modifications to governing terms are required and/or;
- ☐ An increase in price is requested by Seller and/or;
- ☐ A price credit from the Supplier is due and/or;
- ☐ An increase/decrease in the Seller promise delivery date is required.
- ☐ Cost impact, if any is subject to a separate approval process as required by the changes clause.

☒ No *This SDDR grants relief from requirements or changes the requirements and all of the following apply:*

- No commercial impact (No modification of governing commercial terms is required) and;
- No increase in price is requested by Seller and;
- No decrease in price is anticipated or required by Buyer and;
- No extension of promised shipment is required

12. WTP Disposition Statement (Attach extra sheets, sketches, etc., as necessary).

The use of aluminum star knobs is acceptable as requested for this application and is applicable to both housing units in this order.

The use of aluminum knobs is currently identified in the notes on drawing 24590-CD-POA-MKH0-00018-05-00003 as well as in the Material List submittal, 24590-CD-POA-MKH0-00018-06-00002, so no additional supplier document changes are required.

Does SDDR request an exception/deviation from a code or standard Identified in the WTP Code of Record (24590-WTP-COR-MGT-15-00001) ☐ Yes ☒ No

WTP Justification (Attach extra sheets, sketches, etc., as necessary).

Is the change associated with a Q SSC? ☐ Yes ☒ No

Justification: Datasheets 24590-BOF-MKD-DVP-00003, Rev. 0, and 24590-BOF-MKD-DVP-00004, Rev. 0, on line 23 on both datasheets, calls for the housing material to be 316 / 316L / 316 (max 0.030% C; dual certified) stainless. Provision of aluminum material for this use is the supplier's standard offering. The requested change only affects material used outside of the pressure boundary and has no effect on the system or component fit, form, or function. An initial discussion with MET and RAD Safety also indicated that the material, in this application would be acceptable (see attached email S. Crow to J. Singh dated 8-01-2017). There is no impact to cost or schedule as a result of the dispositions of this SDDR.

REQUIREMENTS REVIEW

Client Approval Required*	☐ Yes ☒ No	Interface Resolution Required*	☐ Yes ☒ No

*Address these "yes" answers in the WTP Disposition Statement (above).

Affected WTP Documents:

NOTES:

1. Complete instructions provided at end of form.
2. Items 1 through 9 and 14 to be completed by Supplier.
3. Items 10 through 13 and 15 to be completed by WTP.
4. Non-applicable items to be marked "N/A."
5. Attach additional information whenever necessary.
6. WTP must be notified within 5 days after detection of deviation.
7. Select "Yes" if the SDDR contains or references ECI documents.

Supplier Deviation Disposition Request
Engineering Disposition

PROJECT: Hanford Tank Waste Treatment and Immobilization Plant (WTP Project) **JOB NO.: 24590** **SDDR:** 24590-WTP-SDDR-MS-17-00065 **Rev.** N/A

Title of SDDR: DVP HEPA Filter Housing Closure Knob Material Change

Document Number	Rev	Remarks	Specification Retroactive? Yes	Specification Retroactive? No	Incorporation by Design Change	Incorporation by Reference
24590-BOF-MKD-DVP-00003	1		☐	☐	☐	☒
24590-BOF-MKD-DVP-00004	1		☐	☐	☐	☒
24590-BOF-3PS-MKH0-T0001	1		☐	☐	☐	☒

Affected Supplier Submittals:

Document Number	Rev	Document Number	Rev
N/A		N/A	
N/A		N/A	

Reference Documents:

Document Number	Rev	Document Number	Rev
N/A		N/A	
N/A		N/A	

13. WTP Disposition Approval:

	Print/Type Name	Signature	Date
RE/Originator:	Mike Silver	Originator By: Mike Silver : msilver Org Name: Placed: Sep 28, 2017	
Checker:	Tory Fogle	Checked By: Tory Fogle : tfogle Org Name: Placed: Sep 26, 2017	
Procurement & Subcontracts Representative:	Cynthia Wallace	Reviewed No Comments By: Cindy Wallace : cwallace Org Name: Bechtel Placed: Sep 26, 2017	
Approver(s):	Tracey Hawkins	Reviewed No Comments By: Tracy Hawkins : mthawkin Org Name: Engineering Placed: Sep 26, 2017	
Approver(s):	Allen Kunkle	Approved By: Al Kunkle : akunkle Org Name: Placed: Oct 05, 2017	
Approver(s):	Youssef Mohammad-Zadeh	Approved By: Youssef Mohammad-Zadeh : yoosefmoh Org Name: NSE Placed: Oct 09, 2017	
Approver(s):	Stanley Crow	SRCrow	10/9/17

NOTES:

1. Complete instructions provided at end of form.
2. Items 1 through 9 and 14 to be completed by Supplier.
3. Items 10 through 13 and 15 to be completed by WTP.
4. Non-applicable items to be marked "N/A."
5. Attach additional information whenever necessary.
6. WTP must be notified within 5 days after detection of deviation.
7. Select "Yes" if the SDDR contains or references ECI documents.

Supplier Deviation Disposition Request
Engineering Disposition

PROJECT: Hanford Tank Waste Treatment and Immobilization Plant (WTP Project) **JOB NO.: 24590** **SDDR:** 24590-WTP-SDDR-MS-17-00065 **Rev.** N/A

Title of SDDR: DVP HEPA Filter Housing Closure Knob Material Change

Supplier Acknowledgement:

The Supplier accepts the WTP's disposition herein and agrees to implement the WTP's disposition accordingly. Return the signed SDDR to the WTP Project Document Control (PDC).

14. Supplier			
	Print/Type Supplier Representative Name and Position	*Signature*	*Date*

WTP Supplier Quality Representative Release for Shipment:

The SQR confirms through reviewing, observing, or monitoring that the SDDR has been incorporated or implemented for the applicable material or equipment for shipment.

15. SQR			
	Print/Type Supplier Quality Representative Name and Position	*Signature*	*Date*

NOTES:
1. Complete instructions provided at end of form.
2. Items 1 through 9 and 14 to be completed by Supplier.
3. Items 10 through 13 and 15 to be completed by WTP.
4. Non-applicable items to be marked "N/A."
5. Attach additional information whenever necessary.
6. WTP must be notified within 5 days after detection of deviation.
7. Select "Yes" if the SDDR contains or references ECI documents.

Silver, Mike

From: Crow, Stanley R
Sent: Tuesday, August 01, 2017 10:25 AM
To: Singh, Jyoti
Cc: Mohammad-Zadeh, Youssef; Kyu, Tayar; Silver, Mike
Subject: RE: PMI Testing Questions for Bechtel PO 24590-CD-POA-MKH0-00018 [*EXTERNAL*]

Rad safety and MET were both OK with the aluminum knobs. Operations did not provide an official response and wanted me to talk to rad safety, which I did. These knobs are easy to replace if they did get contaminated, so no problem. Please have the supplier submit an SDDR.

Thanks,
Stan

From: Singh, Jyoti
Sent: Tuesday, August 01, 2017 6:09 AM
To: Crow, Stanley R <SRCROW@bechtel.com>
Cc: Mohammad-Zadeh, Youssef <ymohamma@bechtel.com>; Kyu, Tayar <tmkyu@Bechtel.com>; Silver, Mike <msilver@bechtel.com>
Subject: FW: PMI Testing Questions for Bechtel PO 24590-CD-POA-MKH0-00018 [*EXTERNAL*]

Stan,

Please see below for DVP HEPA Filter Housing. Did you have a chance to talk to Operation to find out if the Aluminum knob are acceptable?

Regards
Jyoti

From: Kyu, Tayar
Sent: Tuesday, August 01, 2017 9:07 AM
To: Singh, Jyoti
Cc: Silver, Mike
Subject: FW: PMI Testing Questions for Bechtel PO 24590-CD-POA-MKH0-00018 [*EXTERNAL*]

Hi Jyoti,

The aluminum knobs are not anodized per the following email from supplier. How should we proceed? Should we ask the supplier to do the SDDR ? If they do, is it acceptable?

Thanks,
Tayar

From: Baker, Brian
Sent: Monday, July 31, 2017 3:59 PM
To: Silver, Mike <msilver@bechtel.com>
Cc: Kyu, Tayar <tmkyu@Bechtel.com>
Subject: FW: PMI Testing Questions for Bechtel PO 24590-CD-POA-MKH0-00018 [*EXTERNAL*]

Mike,

Here is what was provided by PSC regarding the PMI testing

Brian

From: Frank Conahan [mailto:fconahan@radprosys.com]
Sent: Monday, July 31, 2017 2:59 PM
To: Baker, Brian <bcbaker@Bechtel.com>
Cc: Mike Diorio <mdiorio@pscnda.com>; Patrick Smith <psmith@pscnda.com>
Subject: RE: PMI Testing Questions for Bechtel PO 24590-CD-POA-MKH0-00018 [*EXTERNAL*]

Brian,

Areas inaccessible and too small for the gun cannot be tested.
The knobs do not appear to be anodized. Still awaiting word on the nozzle prep.

From: Baker, Brian [mailto:bcbaker@Bechtel.com]
Sent: Monday, July 31, 2017 2:20 PM
To: Frank Conahan <fconahan@radprosys.com>
Cc: Mike Diorio <mdiorio@pscnda.com>; Patrick Smith <psmith@pscnda.com>
Subject: PMI Testing Questions for Bechtel PO 24590-CD-POA-MKH0-00018

Frank,

Gathering information here: what are the limitations on the PMI testing? Engineering wants to know so that the Material Engineering Technology group can weigh in on the PMI process you're proposing. What areas can/can't be tested?

Any word yet on anodized knobs and nozzle prep?

Thank you,

Brian Baker
Expediting Specialist
Reston Execution Center
11720 Plaza America Dr (10th floor-I)
Reston, VA 20190
Phone: (703)-429-6560
Email: bcbaker@bechtel.com
Hours:
6:30-4:00 Monday-Thursday (EST)
6:30-3:00 Fridays, with alternating Fridays off
Upcoming days off: 8/11, 8/25

DVP Primary Exhaust HEPA Filter Housing Datasheet: 24590-BOF-MKD-DVP-00004

MR No.	24590-QL-MRA-MKH0-00018
Plant Item No.	24590-BOF-MK-DVP-HEPA-00004A/B
Rev. No.	2

1	Project	RPP-WTP	Bldg./Rm #	**EMF / E-0102A**	Manufacturer	Camfil Farr
2	Project No.	24590	Supporting Calculations	**24590-BOF-MAC-DVP-00001**		
3	Site	DOE Hanford			Manufacturer Part No.	CF-FB-R-12-12P-316L (SP) *
4	Safety Class	**Non-Safety**	Associated Drawings	**24590-BOF-M6-DVP-00001001**		
5	Seismic Category	**SC-IV**		**24590-BOF-P1-25-00001**	Quantity Required	2
6	System No.	**DVP**	Specifications	**24590-BOF-3PS-MKH0-T0001**	Quality Level	**CM (Note 9)**
7	System Description	**24590-BOF-3ZD-25-00001**				
8	Description	**Process Ventilation Exhaust HEPA Filter and Housing**				

9	**DESIGN CONDITIONS**				
10	Inlet Air Temp. °F DB	143 [2.1]	Housing Interior Chemical Exposure		Note 4
11	Site Storage Conditions - Summer °F DB	113 [1.1]	Radiological dose rate (mrem/hr)		0.5[1.2, 6]
12	Site Storage Conditions - Winter °F DB	(-)23 [1.1]	Rad dose for 40-yr facility life (rem/40 yr)		175
13	**PERFORMANCE RATING**				
14	Design Flow Rate (ACFM)	160 [2.2]	Max. Allow. Leakage (CFM/housing)		0.0002 cfm - See Note 6 *
15	Max Velocity thru Filter Media (ft/min)	**5**	Maximum Design Temperature (°F DB)		195 [7]
16	Operating Pressure (psig)	(-)1 [7]	Leak Test Pressure (psig, initial)		(-) 1.25 [Note 6]
17	Design Pressure (psig)	15 [Note 8]	Housing Press. Drop w/ Clean Filters (psig)		*
18	Total Filter Openings Required	N/A	Housing Weight without HEPA Filters (lbs)		≈200 *
19	No. Filters per Bank	1			
20	**CONSTRUCTION**				
21	Design Housing Manufacturer	Camfil Farr	Design Housing Model Number		CF-FB-R-12-12P-316L (SP) *
22	Housing Construction Method	All Welded	Max. Housing Dim. (in.) - Note 2	L =37	H = 29 / W = 33
23	Housing Material	316 / 316L / 316 (max 0.030% C; dual certified) - See Note 12		Housing Material Gauge	11 Ga
24	Top Panel Material	N/A	Top Panel Material Gauge		N/A
25	Structural Frame Material	N/A	Structural Frame Features		N/A
26	Inlet Plenum Total Volume	0.045 ft^3 *	Outlet Plenum Total Volume		0.045 ft^3 *
27	Inlet Position (Top/Side)	Side	Outlet Position (Top/Side)		Side
28	Inlet Nozzle Dimensions (inches)	sch 40, 4 in. Diameter	Outlet Nozzle Dimensions (inches)		sch 40, 4 in. diameter
29	Inlet Connection Type	Welded	Outlet Connection Type		Welded
30	Inlet Flange Bolt Required	N/A	Outlet Flange Bolts Required		N/A
31	Inlet Flange Bolt Size	N/A	Outlet Flange Bolt Size		N/A
32	Inlet Flange Bolt Material	N/A	Outlet Flange Bolt Material		N/A
33	Inlet Flange Gasket Material	N/A	Outlet Flange Gasket Material		N/A
34	Paint and Finish Material	N/A	Seal Type		Knife edge gel seal
35	**HOUSING ACCESSORIES**				

	Accessory Provided	Yes	No	Accessory Information	
37	Test w/ Inlet Isolation Damper		X	Damper Provided By	N/A
38				Inlet Isolation Damper Type	N/A
39				Inlet Isolation Damper Size	N/A
40	Inlet Transition Piping	X		Inlet Transition Piping Overall Length (in.)	*
41				Inlet Transition Smallest Inside Dimension (in.)	sch 40, 4 in. pipe - See Note 3
42				Inlet Transition Largest Inside Dimension (in.)	sch 40, 4 in. pipe - See Note 3
43	Inlet Aerosol Test Port Criteria	X		Challenge Aerosol Injection Port Connection Type	NPT
44				Challenge Aerosol Injection Port Connection Size	3/4 inch
45				Challenge Aerosol Injection Port Connection Quantity	1
46				Challenge Aerosol Sample Port Connection Type	NPT
47				Challenge Aerosol Sample Port Connection Size	3/8 inch
48				Challenge Aerosol Sample Port Connection Quantity	1
49	Inlet Viewing Ports		X	Total Number of Viewing Ports Required	N/A
50				Inlet Viewing Port Type	N/A
51				Inlet Viewing Port Locations	N/A
52				Inlet Viewing Port Dimensions (in.)	L = N/A / W = N/A
53	Internal Fire Suppression		X	Fire Suppression System Description	N/A
54	Vacuum-Relief Vent Assembly		X	Number Required	N/A
55				Vacuum-Relief Vent Assembly Setpoint	N/A
56				Vacuum-Relief Vent Assembly Manufacturer	N/A
57				Vacuum-Relief Vent Model Number	N/A

DVP Primary Exhaust HEPA Filter Housing Datasheet: 24590-BOF-MKD-DVP-00004

			MR No.	24590-QL-MRA-MKH0-00018		
			Plant Item No.	24590-BOF-MK-DVP-HEPA-00004A/B		Rev. No. 2
1	Project	RPP-WTP	Bldg./Rm #	EMF / E-0102A	Manufacturer	Camfil Farr
2	Project No.	24590	Supporting Calculations	24590-BOF-MAC-DVP-00001		
3	Site	DOE Hanford			Manufacturer Part No.	CF-FB-R-12-12P-316L (SP) *
4	Safety Class	**Non-Safety**	Associated Drawings	24590-BOF-M6-DVP-00001001		
5	Seismic Category	**SC-IV**		24590-BOF-P1-25-00001	Quantity Required	2
6	System No.	**DVP**	Specifications	24590-BOF-3PS-MKH0-T0001	Quality Level	**CM (Note 9)**
7	System Description	**24590-BOF-3ZD-25-00001**				
8	Description	**Process Ventilation Exhaust HEPA Filter and Housing**				

58 HOUSING ACCESSORIES (continued)

59	Accessory Provided	Yes	No	Accessory Information		
60	Test w/ Outlet Isolation Damper		X	Damper Provided By	N/A	
61				Outlet Isolation Damper Type	N/A	
62				Outlet Isolation Damper Size	N/A	
63	Outlet Transition Piping	X		Outlet Transition Piping Overall Length (in.)	*	
64				Outlet Transition Smallest Inside Dimension (in.)	sch 40, 4" pipe - See Note 3	
65				Outlet Transition Largest Inside Dimension (in.)	sch 40, 4" pipe - See Note 3	
66	Outlet Aerosol Test Port Criteria	X		Challenge Aerosol Sample Port Connection Type	NPT	
67				Challenge Aerosol Sample Port Connection Size	3/8 inch	
68				Challenge Aerosol Sample Port Connection Quantity	1	
69	Outlet Viewing Ports		X	Total Number of Viewing Ports Required	N/A	
70				Outlet Viewing Port Type	N/A	
71				Outlet Viewing Port Locations	N/A	
72				Outlet Viewing Port Dimensions (in.)	L = N/A	W = N/A
73	Differential Pressure Taps	X		Differential Pressure Tap Size (inches)	1/2	
74	Drain Connection	X		Drain Connection Size (inches)	3/4	
75	Drain Connection Valve		X	Drain Connection Valve Size (inches)	N/A	
76	Lifting Lugs	X		PVC Safe Change Bag Type	*	
77	Mounting Legs	X				

78 UTILITY REQUIREMENTS

79	Electrical (volts/phase/hertz)	N/A
80	Compressed Air	N/A
81	Intrumentation Taps	N/A
82	Pressure/Leak Test Ports	N/A
83	Air/Aerosol Mixing Test Ports	N/A

84 **Notes:**

85 1.) Vendor to fill in or re-confirm data in cells with (*) asterisk. N/A means not applicable. Source references for inputs are identified in brackets [ ] and are for BNI internal use only. Supporting calculations, associated drawings, and system description are for BNI internal use only.

86 2.) Not to exceed housing dimensions. Vendor to provide actual dimensions.

87 3.) Vendor to provide inlet/outlet transition from housing to connect to 4 inch nominal diameter type 316L SS pipe.

88 4.) The total inorganic constituents of potential concern (COPC) emissions from the DVP System unabated streams are 0.104 g/sec [4.1].

89 The radionuclide COPC Emissions from the DVP System are the following [4.2]:

90	Radionuclide	Unabated Emissions (Ci/yr)	Percent Contribution (%)
91	137Cs	5.27E-02	1%
92	137mBA	4.98E-02	1%
93	14C	1.82E-01	3%
94	151Sm	2.75E+00	38%
95	241Pu	6.45E-02	1%
96	63Ni	1.10E-01	2%
97	90Sr	1.97E+00	27%
98	90Y	1.97E+00	27%
99	Other	9.10E-02	1%
100	TOTAL	7.24E+00	100%

101 5.) Equipment shall be designed for a minimum useful life of 40 years.

102 6.) Max allowable leakage (CFM) = .003 * (Housing Volume (ft^3)) / 60 minutes @ leak test pressure of 1.25 * (Operating Pressure)

DVP Primary Exhaust HEPA Filter Housing Datasheet: 24590-BOF-MKD-DVP-00004

				MR No. 24590-QL-MRA-MKH0-00018			
				Plant Item No. 24590-BOF-MK-DVP-HEPA-00004A/B			Rev. No. 2
1	Project	RPP-WTP	Bldg /Rm #	EMF / E-0102A	Manufacturer	Camfil Farr	
2	Project No.	24590	Supporting Calculations	24590-BOF-MAC-DVP-00001			
3	Site	DOE Hanford			Manufacturer Part No.	CF-FB-R-12-12P-316L (SP) *	
4	Safety Class	Non-Safety	Associated Drawings	24590-BOF-M6-DVP-00001001			
5	Seismic Category	SC-IV		24590-BOF-P1-25-00001	Quantity Required		2
6	System No.	DVP	Specifications	24590-BOF-3PS-MKH0-T0001	Quality Level		CM (Note 9)
7	System Description	24590-BOF-3ZD-25-00001					
8	Description	Process Ventilation Exhaust HEPA Filter and Housing					

Notes (Continued):

7.) Input values are taken directly from their source documents. There is no additional margin added to values on this datasheet.

8.) Based on the maximum design pressure unit commercially available.

9.) Quality Level is CM but remains Air Permit affecting. The design will meet ASME AG-1 requirements (Ref. 8)

10.) All materials shall be fully identified by ASME/ASTM standard and type/grade or UNS.

11.) Contents of this document are Dangerous Waste Permit affecting.

12.) Springs in the filter clamping mechanism may be 300 series stainless steel.

References (BNI Internal Use Only):

1.) 24590-WTP-DB-ENG-01-001, Rev. 6 [No changes to the items listed below due to the BOD revision]

1.1 Table 4-7, Pg. 4-5 - Max and Min Ambient Air Temperatures

1.2 Table 5-1, Pg. 5-4 - R2 Area Max Dose

1.3 Deleted.

2.) 24590-BOF-MAC-DVP-00001, Rev. B

[Rev. 1 - Four EIEs against this calc address system changes; **24590-BOF-EIE-MS-17-0018, Rev. 1** reflects the current design.

That EIE states that the deletion of DVP-HEPA-00002A/B and the addition of the turbine flow meters on the inlets of **DEP-VSL-00003A/B/C** is to be addressed.

These changes do not affect the overall system flow, line size, or the housing pressure design, Review of the other EIE's indicates no impacts.]

2.1 Section 7.1, Pg. 6

2.2 Table 8.2.1

3.) Deleted.

4.) 24590-BOF-M4C-DEP-00001, Rev. B

[Rev. 1 - **24590-BOF-EIE PR-16-0006, Rev. 0** updates batch sizes for DEP-VSL-00004A/B and -00005A/B. The change in the batch size due to the additional condensate dpes not affect the design of this housing.**24590-BOF-EIE-MS-17-0018, Rev. 1** results in a 1 (one) lb/hr mass flow decrease which has no affect on the design of the housing.

4.1 Table 8-6

4.2 Table 8-1

5.) 24590-BOF-M6C-DVP-00001, Rev. B, Attachment D

[Rev. 1 - The line size for the housing was not affected by the calc revision. There are no EIE's posted against this calc]

6.) 24590-BOF-P1-25-00001, Rev. 1 [Rev. 1 - The incorporated DCNs in Rev 1 of the drawing do not affect this filter housing]

7.) 24590-BOF-M6C-DEP-00009, Rev. B, Pg. A-19

[Rev. 1 - Of 16 listed EIEs, only two affect DVP. Those two are **24590-BOF-EIE-MS-17-0017, Rev.0** which says, under Impacts, that this calc is not impacted. for **24590-BOF-EIE-MS-17-0018, Rev.1** a minor change in operating pressure is noted which does not affect this design. Therefore, there are no EIE impacts]

8.) 24590-BOF-QDF-MS-17-0001, Rev. 0, Effluent Management Facility (EMF) Vessel Vent Process System (DVP) Air Permit-Affecting SSCs

Please note that source, special nuclear, and byproduct materials, as defined in the Atomic Energy Act of 1954 (AEA) are regulated at the U. S. Department of Energy (DOE) facilities exclusively by DOE acting pursuant to its AEA authority. DOE asserts that pursuant to AEA, it has sole and exclusive responsibility and authority to regulate source, special nuclear, and byproduct materials at DOE-owned nuclear facilities. Information contained herein on radionuclides is provided for process description purposes only.

Rev	Description	Originator	ES&H	Checker	Reviewer	Approver	Date
2	1) Revised to correct the equipment Tag Number from Ref. 2 and editorial changes. 2) Incorporated 24590-WTP-SDDR-MS-17-00065. 3) Incorporated EIE 24590-WTP-EIE-ENG-17-0018, Rev. 0 and has no impact to this data sheet because the EIE description of change did not impact process stream DEP15 which is for this equipment process stream.	Originator By: Thang E. Thawn - tethawn Org Name: Bechtel Placed: Mar 29, 2018 T. Thawn	N/A	Checked By: Tayar Kyu - tmkyu Org Name: Placed: Mar 29, 2018 T. Kyu	N/A	Y. Mohammad-Zadeh	3/29/18
1	Revised to change Quality Level from Q to CM per 24590-BOF-QDF-MS-17-0001. Updated Ref. revs. Incorp'd EIE 24590-BOF-EIE-MS-17-0060, Rev. 0; incorporated SDDR 24590-WTP-SDDR-MS-17-00028.	M/. Silver	N/A	T. Fogle	N/A	Y. Mohammad-Zadeh	9/14/2017
0	Issued for Purchase Information added from Bid Margin was not reduced	R. Preston	N/A	H. Hendricks	N/A	Y. Mohammed-Zadeh	3/1/2017

DVP HEPA Filter Preheater Datasheet

DSHT No.	Rev. No.
24590-BOF-MED-DVP-00001	**1**

Plant Item No.
24590-BOF-ME-DVP-HTR-00001A/B

1	Project	RPP-WTP	Bldg./Rm #	**EMF / E-0102**	Manufacturer	*
2	Project No.	24590	Supporting Calculations	**24590-BOF-MAC-DVP-00001**		
3	Site	DOE Hanford			Manufacturer Part No.	*
4	Safety Class	**Non-Safety**	Associated Drawings	**24590-BOF-M6-DVP-00001001**		
5	Seismic Category	**SC-IV (Service Level B)** Note 13		**24590-BOF-P1-25-00001**	Quantity Required	2
6	System No.	**DVP**	Reference Documents	**24590-BOF-3PS-MEE0-T0002 Rev. 1**	Quality Level - Note 8	**CM**
7	System Description	**24590-BOF-3ZD-25-00001**		**24590-QL-MRA-MEE0-00004 Rev. 2**		
8	Description	Process Ventilation HEPA Filter Preheater				

9	**REFERENCE DATA**			
10	Primary Design Codes	ASME AG-1-97 (R2000)		
11		ASME Section VIII, Division 1 (Housing)	Code Stamp / NB Registration	Yes
12	**OPERATING PROCESS DATA**			
13	Fluid Name / Fluid Code		DEP Vessel Ventilation Gases / GV	
14	Mass Flow Rate	(lb/hr)	**578**	[1]
15	Density	(lb/ft^3)	**0.067**	Note 6
16	Volumetric Flow Rate	(acfm)	**140**	Note 7
17	Temperature (In / Out)	(°F)	**109 / 143**	[2.1, 2.2]
18	Relative Humidity (In / Out)	(%)	**100% / 40%**	[2.3]
19	Operating Pressure	(psia)	**14.14**	[1]
20	Heater Output (Minimum / Normal Operating / Maximum)	(kW)	*** / * / 3***	[2.4] Note 12
21	Duty	(%)	**100%**	
22	Site Storage Conditions - Summer	(°F DB)	**113**	[3.1]
23	Site Storage Conditions - Winter	(°F DB)	**(-)23**	[3.1]
24	Radiological Dose Rate	(mrem/hr)	**10**	[3.2, 5]
25	Maximum Design Pressure	(psig)	**15**	[6]
26	Maximum Design Temperature	(°F)	**195**	[7]
27	**HEATING ELEMENT DATA**			
28	Type		**Circulation Immersion Heater**	
29	Max. Rated Temperature	(°F)	**1468***	
30	Max. Temperature at Normal Operating Conditions	(°F)	**500***	
31	Max. Temperature at Maximum Power Output	(°F)	*	
32	Mean Time to Failure (MTTF)		5 yrs at 8760 hr/yrs. of use	Note 3
33	Heating Elements Watt Density		**6 WSI***	
34	Heating Elements Sheath Material		**Incoloy 800***	
35	Number of Heating Elements		**6***	
36	**MECHANICAL ENCLOSURE DESIGN DATA**			
37	Maximum Pressure Drop	(psia)	**0.01-0.03***	
38	Pneumatic Test Pressure	(psia)	*	
39	Inlet Nozzle Dimensions	(in.)	**4 in. diameter, nominal**	Note 5
40	Outlet Nozzle Dimensions	(in.)	**4 in. diameter, nominal**	Note 5
41	Connection Type		**CL150 RF Flange**	
42	Max. Dimensions	(in.)	**80" (L) x 72" (W) x 78" (H) ***	Note 10
43	Operating Weight	(lb)	**2400***	
44	Shipping Weight	(lb)	**2400***	
45	Drain Size	(in)	**3/4***	
46	**MATERIALS OF CONSTRUCTION**			
47	Shell and Non-Heated Components	316 / 316L (max 0.030% C)		Note 9
48	Inlet/Outlet Nozzles	316 / 316L (max 0.030% C)		
49	Corrosion Allowance	(in.)	0.040	[8]
50	Heating Element	**Incoloy 800***		Note 9
51	Insulation	**Calcium Silicate***		Note 9
52	Insulation Thickness	(in.)	**1.5***	
53	Outer Jacket	**Aluminum***		Note 9
	Gasket	approved equal to Stock Code #PGGC2W100607		Note 11
54	**POWER AND CONTROL**			
55	Power Supply (voltage / frequency / phase / wires)		480 / 60 / 3 / 3 wires + ground	
56	Thermostat Type		**PARTLOW***	
57	Number of Branch Circuits		**1***	
58	Enclosure Rating (Terminal housing/ Control panel)		UL liquid tight / NEMA 4X	

		DVP HEPA Filter Preheater Datasheet			DSHT No. **24590-BOF-MED-DVP-00001**		Rev. No. **1**
					Plant Item No. **24590-BOF-ME-DVP-HTR-00001A/B**		
1	Project	RPP-WTP	Bldg /Rm #	**EMF / E-0102**	Manufacturer	*	
2	Project No.	24590	Supporting Calculations	**24590-BOF-MAC-DVP-00001**			
3	Site	DOE Hanford			Manufacturer Part No.	*	
4	Safety Class	**Non-Safety**	Associated Drawings	**24590-BOF-M6-DVP-00001001**			
5	Seismic Category	**SC-IV (Service Level B)** Note 13		**24590-BOF-P1-25-00001**	Quantity Required		2
6	System No.	**DVP**	Reference Documents	**24590-BOF-3PS-MEE0-T0002 Rev. 1**	Quality Level - Note 8		**CM**
7	System Description	**24590-BOF-3ZD-25-00001**		**24590-QL-MRA-MEE0-00004 Rev. 2**			
8	Description	Process Ventilation HEPA Filter Preheater					

9 **NOTES:**

10 1. Vendor to fill in data cell with (*) asterisk. Fields containing data from Vendor's proposal are followed by *. Vendor to confirm or update this data. Blank data fields are not required to be completed. Source references for inputs are identified in brackets [ ] and are for BNI internal use only. Supporting calculations, associated drawings, and reference documents are for BNI internal use only.

11 2. Deleted.

12 3. Equipment shall be designed for a minimum useful life of 40 years, inclusive of maintenance, with the exception of the heating element, that shall have a design life of at least 5 years at 8760 hrs /yr.

13 4. There is no notable additional margin added to values on this data sheet. Values are taken directly from their source documents.

14 5. Inlet/Outlet nozzles are to be the smallest available size to connect to 4 inch nominal diameter type 316L SS pipe.

15 6. Density = 144 * Pressure / (R * Temperature) [4.2]

16 Pressure = 14.14 psia [1], R = 53.35 ft*lb/lbm**R [4.1], T = 109*F = 569*R [2.1]

17 7. Volumetric Flow = Mass Flow / (60 * Density)

18 8. The quality level is CM, but remains air permit affecting [9]. The design will meet ASME AG-1

19 9. All materials will need to be fully identified by ASME/ASTM standard and type/grade or UNS.

20 10. Max. dimensions increased as two (2) Heaters and two (2) Control Panels to be mounted on a single structural skid (24590-BOF-DVP-SKID-00001).

21 11. Gasket Stock Code #PGGC2W100607: Gasket 316L Stainless Steel, Flexible Graphite Filled, ASME Class 150, Spiral Wound, with 1/8 inch (3mm) Thick Stainless Steel Centering Ring & SS Inner ring per ASME B16.20 for ASME B16.5 Flanges

22 12. Maximum heater rating is based on the Sellers proposal and exceeds the require value.

23 13. Service level as defined in ASME AG-1. Seismic loads (OBE) is the seismic load required by the building code.

24 14. Contents of this document are Dangerous Waste Permit (DWP) affecting.

25 **REFERENCES (BNI Internal Use Only):**

26 [1] 24590-BOF-M6C-DVP-00001, Rev. B, Attachment D.

27 [2] 24590-BOF-MAC-DVP-00001, Rev. B

28 [2.1] Assumption 6.2.10, Pg. 6

29 [2.2] Section 7.1, Pg. 6

30 [2.3] Assumption 6.1.1, 6.1.3, Pg. 5

31 [2.4] Section 7.1, Pg. 10

32 [3] 24590-WTP-DB-ENG-01-001, Rev. 5

33 [3.1] Table 4-7, Pg. 4-5 - Max and Min Ambient Air Temperatures

34 [3.2] Table 5-1, Pg. 5-4 - R3 Area Max Dose

35 [4] Crane Co. Technical Paper 410, Flow of Fluids through Valves, Fittings, and Pipe, 2011, Crane Co., Stamford Connecticut

36 [4.1] Pg. A-9

37 [4.2] Pg. 1-3

38 [5] 24590-BOF-P1-25-00001, Rev. 1

39 [6] 24590-BOF-M6-DVP-00001001, Rev. 1, PSV Set @ 15 psig (6D)

40 [7] 24590-BOF-M6C-DEP-00009, Rev. B, Pg. A-19

41 [8] 24590-WTP-DC-M-06-001, Rev. 1, Pg. 9

42 [9] 24590-BOF-QDF-MS-17-0001, Rev. 0

43

44 **APPROVAL**

45	1	Revised to reflect Q to CM changes. Incorporated EIE 24590-BOF-EIE-MS-17-0018, Rev.0 (**EIE**: Flow rate used 578 lb/hr with operating pressure at14.14 psia. The new flow rate is 577 lb/hr and the new operating pressure is 14.13 psia. These changes are minor, have no impact, and not reflected on the data sheet). Also incorporated EIE 24590-BOF-EIE-MS-17-0060, Rev.0.	**Originator** By: Thang E. Thawn - tethawn Org Name: Bechtel Placed: Aug 23, 2017	**Checked** By: Tory Fogle - tjfogle Org Name: Placed: Aug 24, 2017	For	9/6/2017
			Thang Thawn	Tory Fogle	Y. Mohammad-Zadeh	
46	0	**Issued for Purchase** Conformed to Seller's Bid Impacts against this document have been evaluated and there are no EIE against this datasheet. Margins have not been reduced.	R. Preston	J. Shin	Y. Mohammad-Zadeh	3/6/2017
47	**Revision**	**Description**	**Originator**	**Checker**	**Approver**	**Date**

Notice:

Please note that source, special nuclear, and byproduct materials, as defined in the Atomic Energy Act of 1954 (AEA), are regulated at the US Department of Energy (DOE) facilities exclusively by DOE acting pursuant to its AEA authority. DOE asserts that, pursuant to the AEA, it has sole and exclusive responsibility and authority to regulate source, special nuclear, and byproduct materials at DOE-owned nuclear facilities. Information contained herein on radionuclides is provided for process description purposes only.

Issued by
RPP-WTP PDC

DVP Exhauster Datasheet:

24590-BOF-MAD-DVP-00001

MR No.	24590-QL-MRA-MA00-00001
Plant Item No.	24590-BOF-MA-DVP-EXHR-00001A/B
Rev. No.	1

1	Project	RPP-WTP	Bldg. Room #	EMF-25/ E-0102		Manufacturer	*	
2	Project No.	24590	Supporting Calculations	24590-BOF-MAC-DVP-00001		Manufacturer Part No.	*	
3	Site	DOE Hanford				Quantity Required	2	
4	Safety Class	Non-Safety	Supporting Drawings	24590-BOF-M6-DVP-00001001		Quality Level	CM (see Note 3)	
5	Seismic Category	SC-IV				Supporting Specification	24590-BOF-3PS-MACS-T0001	
6	System No.	DVP	System Description		24590-BOF-3ZD-25-00001			
7	Description	Process Ventilation Exhauster						
8	**ROOM CONDITIONS**							
9	Zone Temperature [2.3], [1.3]	Minimum	59 °F	Maximum	104 °F	Relative Humidity [1.3]	10% Minimum	
10	Site Storage Conditions [1.1]	Minimum	(-) 23 °F	Maximum	113 °F	Elevation [6]	673.75 ft above MSL	
11	Environmental Qualification	N/A		Radiation/Contamination Classification Area [5]			R3/C3	
12				Maximum Radiological Dose Rate [1.2], [5]			10 mrad/hr	
13	**DESIGN CONDITIONS (Note 12)**							
14	Design Fan Capacity, Volumetric Flow [2.1]	160	ACFM	Design Fan Capacity, Mass Flow [3]			577	lb/hr
15	Inlet Air Temperature at Design Flow [2.2]	143	°F	Inlet Air Density at Design Flow			0.06	lbs/ft^3
16	Design Total Pressure [2.1] (Note 9)	32	inches WC	Normal Fan Discharge Temperature Limit			N/A	°F
17	External Static Pressure at Normal Flow [2.1] (Note 9)	32	inches WC	Minimum Fan Efficiency			11.1*	%
18	Power at Design Conditions	10.79*	BHP	Maximum Allowable Shaft Speed			3528*	RPM
19	Maximum Design Temperature [4]	195	°F					
20	**CONSTRUCTION**							
21	Manufacturer	Chicago Blower Corporation		Manufacturer Model Number			Design 53 Size N4*	
22	AMCA Drive Arrangement	8		AMCA Inlet Box Position			N/A	
23	AMCA Motor Position	Direct Drive		AMCA Discharge (Note 7)			UB*	
24	AMCA Rotation	CW*		Fan Scroll Type			SISW	
25	Assembly Dimensions (Mtr + Fan + Base)		L = 52*	W = 38*	H = 50*	inches		
26	Assembly Weight (Mtr + Fan + Base) - Note 8		*	pounds				
27	**FAN WHEEL**							
28	Fan Wheel Type	Centrifugal*		Fan Shaft Diameter (in)			3 3/16*	
29	Design Wheel Diameter (in)	40*		Actual Wheel Diameter (in)			40*	
30	Design Wheel Width	100%*		Actual Wheel Width			100%*	
31	Design Fan RPM	3499*		Actual Fan RPM (Design)			3499*	
32	Design Brake Horsepower	10.8*		Actual Brake Horsepower (Design)			10.79*	
33	Fan Bearing Type	*		Fan Bearing Designator			*	
34	Bearing Special Features	L10 Life 100 khr or better		Safety Guards Types			OSHA Compatible	
35	**FAN ACCESSORIES**							
36	Flanged Inlet	Yes, CL150 RF Flange		Flanged Inlet Dimensions			4" Diameter, nominal	
37	Flanged Discharge	Yes, CL150 RF Flange		Flanged Discharge Dimensions			4" Diameter, nominal	
38	Flanged Discharge Evase	No		Flanged Evase Dimensions			N/A	
39	Split Housing	No		Split Housing Type			N/A	
40	Inlet Box	No		Inlet Box Type			N/A	
41	Inlet Damper	No		Inlet Damper Type			N/A	
42	Inlet Damper Motor	No		Inlet Damper Mfr and Model No			N/A	
43	Inspection Door	Yes - Note 2		Inspection Door Size			*	
44	Drain Connection	Yes		Drain Connection Size			*	
45	Shaft Seals	Yes		Seal Type (Note 10)			John Crane Shaft Seal*	
46	Isolation Base	No		Isolation Base Manufacturer			N/A	
47								
48	Isolation Springs	Yes		Isolation Springs Mfr and Model No			VMC M2S Seismic*	
49				Isolation Springs Minimum Diameter			*	
50				Isolation Springs Deflection			*	
51				Isolation Springs Restraint Features			*	
52	Insulation	No		Insulation thickness			N/A	
53	Insulation Studs	No						
54	Flexible Connection Inlet	4 inch Schedule 40S Class 150 RF Lap Joint Flange		Flexible Connection Inlet Type			SS corrugated and braided metal hose assembly	
55				Flexible Inlet Connection Material			316 / 316L (max 0.030% C)	
56				Flexible Connection Manufacturer Model No			PMT*	
57	Flexible Connection Outlet	4 inch Schedule 40S Class 150 RF Lap Joint Flange		Flexible Connection Outlet Type			SS corrugated and braided metal hose assembly	
58				Flexible Outlet Connection Material			316 / 316L (max 0.030% C)	
59				Flexible Connection Manufacturer Model No			PMT*	

DVP Exhauster Datasheet:

24590-BOF-MAD-DVP-00001

					MR No. 24590-QL-MRA-MA00-00001	
					Plant Item No. 24590-BOF-MA-DVP-EXHR-00001A/B	Rev. No. 1
1	Project	RPP-WTP	Bldg./Room #	EMF-25/ E-0102	Manufacturer	*
2	Project No.	24590	Supporting Calculations	24590-BOF-MAC-DVP-00001	Manufacturer Part No.	*
3	Site	DOE Hanford			Quantity Required	2
4	Safety Class	**Non-Safety**	Supporting Drawings	24590-BOF-M6-DVP-00001001	Quality Level	**CM (see Note 3)**
5	Seismic Category	**SC-IV**			Supporting Specification	**24590-BOF-3PS-MACS-T0001**
6	System No.	**DVP**	System Description	**24590-BOF-3ZD-25-00001**		
7	Description	**Process Ventilation Exhauster**				
8	**FAN ACCESSORIES (continued)**					
9	Inlet Screen	**Yes**	Inlet Screen Features	**N/A**		
10	Fan Pedestal	**Yes**	Fan Pedestal Description	**Common mounting frame for fan, motor, and bearings**		
11	Discharge Silencer	**No**				
12	**MATERIALS OF CONSTRUCTION - Note 11**					
13	Housing	**316 / 316L (max 0.030% C)**	Fan Wheel	**Duplex 2205 Stainless Steel UNS S32205**		
14	Evase	**N/A**	Mounting Frame	**316 / 316L (max 0.030% C)**		
15	Shaft	**316 / 316L (max 0.030% C)**	Inlet Damper	**N/A**		
16	Inlet Vane	**N/A**	Discharge Damper	**N/A**		
17	Inlet Screen	**N/A**	Mechanical Coupling	**Falk or Equal**		
18	**MOTOR AND DRIVE REQUIREMENTS**					
19	Driven Equipment / Motor relationship is as follows.:					
20	**Fan Tag Number**	**Motor Tag Number**				
21	DVP-EXHR-00001A	DVP-MTR-00001A				
22	DVP-EXHR-00001B	DVP-MTR-00001B				
23	Adjustable Speed Drive (ASD)	**Yes - Note 13**				
24	Special Drive Features	-				

25 **Notes**

26 1) Seller to fill in data in cells with (*) asterisk. Fields containing data from Seller's proposal are followed by *. Seller to confirm or update this data. Source references for inputs are identified in brackets [ ] and are for BNI internal use only. Supporting calculations and drawings and system description are for BNI internal use only.

34 2) Inspection door to be provided if wheel is 12 inches or larger in diameter, per ASME AG-1, BA-4331.

35 3) Quality Level is CM but remains Air Permit affecting. The design will meet ASME AG-1 requirements. [7]

36 4) Deleted.

37 5) Deleted.

38 6) Equipment shall be designed for a minimum useful life of 40 years.

39 7) Discharge Orientation is to be upblast.

40 8) Bounding weight is for the exhauster and the motor is 1260 lbs and does not include the ASD. Seller to provide actual weight.

41 9) Additional margin added to values on this datasheet: Static pressure, Line 16 and 17, is rounded from 31.4 to 32 in. wg.

42 10) Shaft seals shall meet the leakage criteria of AG-1, BA-4141.2.

43 11) All materials shall be fully identified by ASME/ASTM standard and type/grade or UNS.

44 12) Design condition at 160 ACFM, at 32 inches WC shall occur at 80% of the synchronous speed (3600 RPM).

45 13) Buyer will provide the ASD, Seller shall ensure motor information is provided to Buyer and that the motor meets interface requirements. Refer to
46 specification 24590-BOF-3PS-MACS-T0001, Engineering Specification for DVP Vessel Vent Centrifugal Exhauster, Section 10.3.7.11.

47 14) (Conformance to Seller's offering), Minor editorials for items that are no longer relevant have been deleted, Added more description to the BNI
48 references items, Change variable to adjustable speed drive, Include Seller's information for Manufacturer, Model, BHP, Fan Efficiency, Fan Shaft
49 material, etc.; EIE 24590-BOF-EIE-MS-17-0018 is incorporated. The changes to this datasheet do not reduce margin.

50 15) The contents of this document are Dangerous Waste Permit (DWP) affecting.

51 16) Please note that source, special nuclear, and byproduct materials, as defined in the Atomic Energy Act of 1954 (AEA) are regulated at the U. S. Department of
52 Energy (DOE) facilities exclusively by DOE acting pursuant to its AEA authority. DOE asserts that pursuant to AEA, it has sole and exclusive responsibility and
53 authority to regulate source, special nuclear, and byproduct materials at DOE-owned nuclear facilities. Information contained herein on radionuclides is provided
54 for process description purposes only.

55 **References (BNI Internal Use Only)**

56 [1] 24590-WTP-DB-ENG-01-001, Rev. 5, Basis of Design [Rev. 1 - No outstanding changes to the items listed below due to the BOD revision]

57 [1.1] Table 4-7, Hanford Site Climatological Data, Max and Min Ambient Air Temperatures

58 [1.2] Table 5-1, Pg. 5-4 - Radiological Area Classification Based on Dose Rate

59 [1.3] Table 12-1, Internal Design Conditions, Internal unoccupied C3 areas, Minimum Temperature and Relative Humidity

60 [2] 24590-BOF-MAC-DVP-00001, Rev. B, DFLAW EMF Vessel Vent Process System (DVP) HEPA Filter, Preheater, and Exhaust Fan Sizing [Rev. 1 - Four EIEs against this calc address system changes; EIE MS-17-0018 reflects the current design. Note 14 of this DS says that EIE was incorporated. Review of the other EIE's indicates no additional impacts.]

61 [2.1] Section 8.3, Pg. 10

62 [2.2] Section 7.3, Pg. 9

63 [2.3] Assumption 6.2.9, Pg 6, Max.

64 [3] 24590-BOF-M6C-DVP-00001, Rev. B, Attachment D [Rev. 1 - There are no EIE's posted against this calc]

65 [4] 24590-BOF-M6C-DEP-00009, Rev. B, Pg. A-19, DVP-GW-00005, Design Pressure and Temperature Calculation for the EMF DEP/DVP/AFR/NLD/SHR/SNR Systems [Rev. 1 - Of 16 listed EIEs, only two affect DVP. Those two are MS-17-0017, which says, under Impacts, that this calc is not impacted and 17-0018,
66 which, per Note 14 of this DS, has been incorporated. Therefore, there are no EIE impacts]

67 [5] 24590-BOF-P1-25-00001, Rev. 1, BOF LAW Effluent Process Bldg & Law Effluent Drain Tank Bldg General Arrangement Plan at Elev. 0'-0"

68 [6] 24590-BOF-C2-C12T-00002, Rev. 12 - 1st Floor Elev (ft) for Law Effluent Process and Law Effluent Drain Tank Bldgs

69 [7] 24590-BOF-QDF-MS-17-00001, Rev. 0, Effluent Management Facility (EMF) Vessel Vent Process System (DVP) Air Permit-Affecting SSCs

Rev	Reason for Revision	Originator	Equipment Engineer	ES&H	Checker	Reviewer	Approver	Date
1	Revised to change Quality Level from Q to CM per 24590-BOF-QDF-MS-17-0001: Incorp'd EIE 24590-BOF-EIE-MS-17-0060, Rev. 0	Originator Mike Silver	N/A	N/A	Checked Tory Fogle	N/A	JDV For Y. Mohammed-Zadeh	9/5/2017
0	Issued for Purchase (See Note 14)	James Babcock Tory Fogle (EDR Comments Only)	N/A	N/A	Erica Poberezny	N/A	Y. Mohammed-Zadeh	4/12/2017

☐ Yes ☒ No **THIS DOCUMENT CONTAINS EXPORT CONTROLLED INFORMATION, SEE BASE DOCUMENT FOR FULL LABEL AND RESTRICTIONS**

Supplier Deviation Disposition Request

PROJECT: Hanford Tank Waste Treatment and Immobilization Plant (WTP Project) **JOB No.: 24590**

FOR WTP USE		
WTP SDDR No.	Rev.	DATE RECEIVED
24590-WTP-SDDR-MS-18-00004	N/A	01-10-2018

FOR SUPPLIER USE	
SUPPLIER SDDR No.	DATE SUBMITTED
N2150-SDDR-05	01/10/2018

1. Supplier Name	Address	City & State	Zip
Preferred Metal Technologies	9341 Adam Don Parkway	Woodridge, IL	60517

2. Supplier's Order No.	3. WTP P.O. or SC	Rev
N2150	24590-CD-POA-MA00-00001	1

4. Deviation Description (Attach extra sheets, photographs, sketches, etc. as necessary and identify quantity and serial numbers as applicable)

Per DVP Exhauster Datasheet: 24590-BOF-MAD-DVP-00001, the assembly weight (Mtr+Fan+Base) shall not exceed 1,260 lbs.. The actual weight of the motors as well as additional accessories (i.e. flexible hoses, transition pieces, etc.) as well as the increased housing thickness has resulted in the weight increasing and exceeding this requirement.

4a. Supplier's NCR: (See instructions for applicability) Number: N/A

5. Supplier's Proposed Disposition: ☐ Use As-Is ☐ Repair ☒ Modify WTP Requirement

6. Supplier's Estimated Cost Impact: N/A **7. Supplier's Estimated Schedule Impact:** N/A

8. Proposed Disposition and Technical Justification (plus Cost/Schedule if applicable): (Attach extra sheets, sketches, etc., as necessary.)

PMT's proposed disposition is to modify this requirement to allow for 2,500 lbs per completed fan.

9. Supplier's Authorized Representative	Signature
Name Michael McRae	
Title	Date
Project Engineer	01/10/2018

10. WTP Engineering Action ☒ Approved ☐ Disapproved ☐ See Below

Distribution: Procurement & Subcontracts Construction

NOTES:

1. Complete instructions provided at end of form.
2. Items 1 through 9 and ~~15~~ 14 TET 1-18-18 to be completed by Supplier
3. Items 10 through ~~14~~ TET 1-18-18 13 and ~~16~~ 15 TET 1-18-18 to be completed by WTP
4. Non applicable items to be marked "N/A"
5. Attach additional information whenever necessary
6. WTP must be notified within 5 days after detection of deviation
7. Selects "Yes", if the SDDR contains or references ECI documents.

TET 1-18-18 Ref: 24590-WTP-3DP-G04B-00063

~~MR Number: 24590-CM-MRA-PY01-00032, Rev 1~~

Supplier Deviation Disposition Request
Engineering Disposition

PROJECT: Hanford Tank Waste Treatment and Immobilization Plant (WTP Project) **JOB NO.: 24590** **SDDR:** 24590-WTP-SDDR-MS-18-00004 **Rev.** N/A

Title of SDDR: SDDR for NTE (Not to Exceed) Weight

11. WTP Procurement & Subcontracts Action: Commercial Terms Impact:

☐ Yes *This SDDR grants relief from requirements or changes the requirements and; check each (consideration) item that applies:*

- ☐ Modifications to governing terms are required and/or;
- ☐ An increase in price is requested by Seller and/or;
- ☐ A price credit from the Supplier is due and/or;
- ☐ An increase/decrease in the Seller promise delivery date is required.
- ☐ Cost impact, if any is subject to a separate approval process as required by the changes clause.

☒ No *This SDDR grants relief from requirements or changes the requirements and all of the following apply:*

- No commercial impact (No modification of governing commercial terms is required) and;
- No increase in price is requested by Seller and;
- No decrease in price is anticipated or required by Buyer and;
- No extension of promised shipment is required

12. WTP Disposition Statement (Attach extra sheets, sketches, etc., as necessary).

WTP approves the supplier's disposition. According to MDS (Mechanical Data Sheet) 24590-BOF-MAD-DVP-00001, Rev.1, Note 8, bounding weight required 1,260 lbs and Seller (supplier) to provide actual weight. The new proposed NTE (Not to Exceed) weight is 2,500 lbs per supplier. The new proposed NTE weight of 2,500 lbs has been reviewed and accepted by WTP CS&A team prior to SDDR submission from the supplier (attached). The supplier is to incorporate this SDDR in 24590-CD-POA-MA00-00001-02-00002.

Does SDDR request an exception/deviation from a code or standard identified in the WTP Code of Record (24590-WTP-COR-MGT-15-00001) ☐ Yes ☒ No

WTP Justification (Attach extra sheets, sketches, etc., as necessary).

Is the change associated with a Q SSC? ☐ Yes ☒ No

The new proposed NTE weight of 2,500 lbs for exhauster (DVP-EXHR-00001A/B) has no design impact. The equipment support frame analysis is still bounding the NTE weight of 2,500 lbs. Therefore, this SDDR is acceptable.

REQUIREMENTS REVIEW

Client Approval Required*	☐ Yes ☒ No	Interface Resolution Required*	☐ Yes ☒ No

*Address these "yes" answers in the WTP Disposition Statement (above).

Affected WTP Documents:

NOTES:

1. Complete instructions provided at end of form.
2. Items 1 through 9 and 14 to be completed by Supplier.
3. Items 10 through 13 and 15 to be completed by WTP.
4. Non-applicable items to be marked "N/A."
5. Attach additional information whenever necessary.
6. WTP must be notified within 5 days after detection of deviation.
7. Select "Yes" if the SDDR contains or references ECI documents.

Supplier Deviation Disposition Request
Engineering Disposition

PROJECT: Hanford Tank Waste Treatment and Immobilization Plant (WTP Project) **JOB NO.:** 24590 **SDDR:** 24590-WTP-SDDR-MS-18-00004 **Rev.** N/A

Title of SDDR: SDDR for NTE (Not to Exceed) Weight

Document Number	Rev	Remarks	Specification Retroactive? Yes	Specification Retroactive? No	Incorporation by Design Change	Incorporation by Reference
24590-BOF-MAD-DVP-00001	1		☐	☐	☐	☒
			☐	☐	☐	☐

Affected Supplier Submittals:

Document Number	Rev	Document Number	Rev
24590-CD-POA-MA00-00001-02-00002	B		

Reference Documents:

Document Number	Rev	Document Number	Rev
N/A			

13. WTP Disposition Approval:

	Print/Type Name	Signature	Date
RE/Originator:	Thang Thawn	Originator By: Thang E. Thawn - tethawn Org Name: Bechtel Placed: Jan 18, 2018	
Checker:	Tory Fogle	Checked By: Tory Fogle - tjfogle Placed: Jan 19, 2018	
Procurement & Subcontracts Representative:	Kurt Knapp	Reviewed No Comments ☑ Placed: Jan 18, 2018	
Reviewer(CS&A):	Manuel Rosario	Reviewed No Comments ☑	
Approver(s):	Youssef Mohammad-Zadeh	Approved By: Youssef Mohammad-Zadeh - ymohamma Org Name: NSE Placed: Jan 23, 2018	
Approver(s):	SEAN SMITH ~~Stanley Crow~~ SOC 1/23/18		1/23/18

NOTES:

1. Complete instructions provided at end of form.
2. Items 1 through 9 and 14 to be completed by Supplier.
3. Items 10 through 13 and 15 to be completed by WTP.
4. Non-applicable items to be marked "N/A."
5. Attach additional information whenever necessary.
6. WTP must be notified within 5 days after detection of deviation.
7. Select "Yes" if the SDDR contains or references ECI documents.

Supplier Deviation Disposition Request
Engineering Disposition

PROJECT: Hanford Tank Waste Treatment and Immobilization Plant (WTP Project) **JOB NO.: 24590** **SDDR:** 24590-WTP-SDDR-MS-18-00004 **Rev.** N/A

Title of SDDR: SDDR for NTE (Not to Exceed) Weight

Supplier Acknowledgement:

The Supplier accepts the WTP's disposition herein and agrees to implement the WTP's disposition accordingly. Return the signed SDDR to the WTP Project Document Control (PDC).

14. Supplier	*Print/Type Supplier Representative Name and Position*	*Signature*	*Date*

WTP Supplier Quality Representative Release for Shipment:

The SQR confirms through reviewing, observing, or monitoring that the SDDR has been incorporated or implemented for the applicable material or equipment for shipment.

15. SQR	*Print/Type Supplier Quality Representative Name and Position*	*Signature*	*Date*

Please note that source, special nuclear, and byproduct materials, as defined in the Atomic Energy Act of 1954 (AEA) are regulated at the U. S. Department of Energy (DOE) facilities exclusively by DOE acting pursuant to its AEA authority. DOE asserts that pursuant to AEA, it has sole and exclusive responsibility and authority to regulate source, special nuclear, and byproduct materials at DOE-owned nuclear facilities. Information contained herein on radionuclides is provided for process description purposes only.

NOTES:
1. Complete instructions provided at end of form.
2. Items 1 through 9 and 14 to be completed by Supplier.
3. Items 10 through 13 and 15 to be completed by WTP.
4. Non-applicable items to be marked "N/A."
5. Attach additional information whenever necessary.
6. WTP must be notified within 5 days after detection of deviation.
7. Select "Yes" if the SDDR contains or references ECI documents.

Thawn, Thang

From: Rosario, Manuel
Sent: Tuesday, January 09, 2018 10:55 AM
To: Thawn, Thang
Cc: Jeffrey, Aftab Husain
Subject: RE: Exceeded Not to Exceed Weight (24590-QL-MRA-MA00-00001)

Thang,

In reviewing our analysis on the equipment support frames for DEP-EXHR-00001A/B ("committed stage"), it looks like using a NTE weight of 2,500 lbs is acceptable as other considered equipment bound the design. Equipment frame adequacy should be confirmed once vendor-specific equipment reactions are provided.

Regards,

Manuel E. Rosario, P.E.
Structural Engineer
Bechtel NS&E
WTP, DFLAW
RO3 - Reston, VA
Phone: (703)-429-6765
E-mail: merosari@bechtel.com
Working hours: 8:30 AM to 6:00 PM ET

From: Thawn, Thang
Sent: Tuesday, January 09, 2018 9:52 AM
To: Rosario, Manuel <merosari@Bechtel.com>
Cc: Jeffrey, Aftab Husain <AHJEFFRE@bechtel.com>
Subject: FW: Exceeded Not to Exceed Weight (24590-QL-MRA-MA00-00001)
Importance: High

Hello Manual,
I need your quick response on this request. Is the 2500 lb acceptable (please see below), I am going to talk to the supplier shortly. Thanks.

Sincerely,

Thang Thawn
NS&E, Mechanical Systems Engineer
Tel: (703) 429 - 6422
Email: tethawn@bechtel.com

From: Thawn, Thang
Sent: Wednesday, December 13, 2017 6:26 PM
To: WTP DFLAW CSA Review <wtpdflcs@Bechtel.com>; **WTP DFLAW Plant Design Review** <wtpdflpd@Bechtel.com>
Cc: Rosario, Manuel <merosari@Bechtel.com>; Jeffrey, Aftab Husain <AHJEFFRE@bechtel.com>; Mcgrath, James P (WTP) <JPMCGRAT@bechtel.com>; Heintz, Shane <sheintz@bechtel.com>; McGee, Timothy <tamcgee@bechtel.com>; Houlett, Wes <dwhoule1@Bechtel.com>; Mohammad-Zadeh, Youssef <ymohamma@bechtel.com>; Singh, Jyoti <jsingh@bechtel.com>; Soltani, Mehdi <msoltani@Bechtel.com>; Evans, Joel <jsevans1@bechtel.com>; Crow, Stanley R <SRCROW@bechtel.com>; Thawn, Thang <tethawn@bechtel.com>; **Knapp, Kurt B** <KKNAPP@Bechtel.com>; Gatrel, Trey <llgatrel@Bechtel.com>; Sober, Richard <rsober@Bechtel.com>
Subject: Exceeded Not to Exceed Weight (24590-QL-MRA-MA00-00001)
Importance: High

Hello CS&A and PD teams,
Based on the latest information from the supplier, DVP-EXHR-00001A/1B will be exceeding NTE (Not To Exceed) weight requirement. Please let me know soon if the new proposed weight is whether acceptable or not acceptable. If it is acceptable, the supplier is planning to submit a SDDR.

NTE Weight required = 1,260 lbs (See 24590-BOF-MAD-DVP-00001, Rev.1, Note 8)
The Supplier Proposed Weight = 2,500 lbs (rounded)

Please response by **COB 12-15-2017**. Thanks you for your help and understanding,

Note:
Please see the attached Email also for additional information. I am just trying to keep all in the loop. Again thanks you.

Sincerely,

Thang Thawn
NS&E, Mechanical Systems Engineer
Tel: (703) 429 - 6422
Email: tethawn@bechtel.com

Issued by
RPP-WTP PDC

RIVER PROTECTION PROJECT – WASTE TREATMENT PLANT

ENGINEERING SPECIFICATION

FOR

DFLAW EMF Lag Storage and Overhead Sampling Vessels

Content applicable to ALARA? ☒ Yes ☐ No

ADR No.
24590-BOF-ADR-M-16-0003

Rev
1

Specification changes retroactive? ☒ Yes ☐ No
☐ N/A (alpha revision or revision 0)

Retroactive applicability: All changes in this revision are to be incorporated by the SELLER into equipment design for all items on the purchase order.

NOTE: Contents of this document are Dangerous Waste Permit affecting.

Quality Level
CM
DOE Contract No. DE-AC27-01RV14136

REV	DATE	BY	CHECK	AUTHORIZATION	APPROVER *
3	5/8/18	Originator By: Ryan Rickenbach - rzricken Org Name: Placed: Apr 18, 2018 Ryan Rickenbach	Checked By: Kar Wei (Sengwai) Chin - kwchin Org Name: Mechanical Systems Placed: Apr 18, 2018	N/A	Stan Crow Approved By: Sarah Barker - slbarker Org Name: SysEng Mgr and Mech Sr EGS Placed: May 08, 2018 Sarah Barker
2	03/07/2018	Ryan Rickenbach	Sengwai Chin	N/A	Stan Crow Allen Kunkle
1	01/29/2018	Ryan Rickenbach	Sengwai Chin	N/A	Sean Smith Allen Kunkle
0	06/30/2017	Jung Shin	Ryan Rickenbach	N/A	Youssef Mohammad-Zadeh John Schneider

Reviewed No Comments ☑ By: Jerkl Mauss - jlmauss Org Name: Bechtel Placed: May 08, 2018

SPECIFICATION No.
24590-BOF-3PS-MVSC-T0003

Rev
3

Reviewed No Comments ☑ By: William Slagle - whslagle Org Name: BNI Placed: May 08, 2018

N/A-10 Item 1: No SE document required since this specification: does not authorize modification to a Haz Cat 2 or 3 nuclear facility; does not implement PDSA/DSA requirements; and is not a safety design basis listed document.

William Slagle, NSE Review

*The designated procedure subject matter expert (SME) for 24590-WTP-3DP-G04B-00049, *Engineering Specifications*, will concur with the retroactive determination and retroactive applicability details for all Specification Change Notices. Designated procedure SME Concurrence is documented by the initials of the SME in or by the Approval box. See CCN 263771 for details.

Revision History

Revision	Reason for Revision	Q Specification Revision Only Margin Reduced?		CM Only
		YES	NO	N/A
0	Initial Issue. Issued for Procurement (to reuse UFP-VSL-00002A/B and HLP-VSL-00027A/B).	N/A	N/A	N/A
1	Incorporated insulation support details, updated OSHA requirements, updated scope to include all verification document requirements for complete vessel fabrication. Updated to implement 24590-BOF-DCCE-MS-17-0001. Incorporated 24590-WTP-SDDR-MS-17-00121 and 24590-WTP-SDDR-MS-17-00141.	☐	☐	☒
2	Exhibit 5 was unintentionally left out in revision 1. This revision will include exhibit 5 back into the specification. The previous version was reviewed on EDR with exhibit 5 included. Revision Bars not used as exhibit 5 was re-inserted in its entirety.	☐	☐	☒
3	Incorporated editorial comments from Ecology review. Incorporated 24590-WTP-SDDR-MS-18-00021.	☐	☐	☒

Notice

Please note that source, special nuclear, and byproduct materials, as defined in the Atomic Energy Act of 1954 (AEA), are regulated at the US Department of Energy (DOE) facilities exclusively by DOE acting pursuant to its AEA authority. DOE asserts, that pursuant to the AEA, it has sole and exclusive responsibility and authority to regulate source, special nuclear, and byproduct materials at DOE-owned nuclear facilities. Information contained herein on radionuclides is provided for process description purposes only.

Contents

Notice....1
1 Scope....4
1.1 Project Description and Location....4
1.2 Equipment, Material, and Services Required....4
1.3 Work by Others....5
1.4 Acronyms....5
1.5 Safety/Quality Classifications....6
2 Applicable Documents....6
2.1 General....6
2.2 Codes and Standards....6
2.3 Reference Documents and Drawings....7
3 Design Requirements....9
3.1 General....9
3.2 Basic Function....9
3.3 Performance....10
3.4 Design Conditions....11
3.5 Loadings....11
3.6 Environmental Conditions....11
3.7 Accessibility and Maintenance....12
4 Materials....12
4.1 General....12
4.2 Materials and Equipment....12
4.3 Construction....12
4.4 Prohibited Materials....13
5 Fabrication....13
5.1 General....13
6 Tests and Inspections....14
6.1 General....14
6.2 Shop Tests....14
6.3 Non-Destructive Examination (NDE)....14
6.4 Inspection and Test Status....14
7 Preparation for Shipment....14
7.1 General Requirements....14
7.2 Tagging and Marking....15

8 Quality Assurance 15
9 Configuration Management 15
10 Documentation and Submittals 16
10.1 General 16
10.2 Submittals 16

Exhibits

Exhibit 1 - Positive Material Identification (PMI) for Shop Fabrication 1-1
Exhibit 2 - Structural Design Loads for Seismic Category IV Equipment and Tanks 2-1
Exhibit 3 - Cold Bending of Pipe 3-1
Exhibit 4 - General Welding and NDE Requirements for Supplier Fabricated Piping..... 4-1
Exhibit 5 - Shop Fabrication of Piping 5-1
Exhibit 6 - Pressure Vessel Design and Fabrication 6-1
Exhibit 7 - Seismic Qualification Criteria for Pressure Vessels 7-1
Exhibit 8 - Technical Supply Conditions for Pipe, Fittings, and Flanges……..... 8-1
Exhibit 9 - Refined Nozzle Loads 9-1

1 Scope

1.1 Project Description and Location

The Office of River Protection (ORP) and its contractors manage 177 underground radioactive waste storage tanks at the Hanford Site in Washington. These tanks contain approximately 56 million US gallons of radioactive waste. Bechtel National, Inc. (BNI) has a contract with the US Department of Energy to design, construct, and commission the Hanford Tank Waste Treatment and Immobilization Plant (WTP) to process and vitrify this waste into a stable form that is suitable for permanent storage or disposal. The WTP will be constructed in the 200 East Area of the Hanford Site, near Richland, Washington. The main facilities within the WTP complex will be the Pretreatment facility (PTF), Low-Activity Waste facility (LAW), High-Level Waste facility (HLW), Analytical Laboratory (Lab), Balance of Facilities (BOF) and the Effluent Management Facility (EMF).

1.2 Equipment, Material, and Services Required

This specification describes the minimum technical requirements for the design, fabrication, and testing of Quality Level CM, stainless steel vessels for use in the EMF.

The vessels applicable to this specification were partially fabricated and are considered Work In Progress (WIP). The scope of this specification is all work required to design, fabricate and inspect the vessels in accordance with the requirements contained in this specification and its associated reference documents and drawings. Design scope includes all documents that compose the pressure boundary of the vessel, active nozzles and active internal piping utilized for mixing. Also included in the design scope are any attachment points to the vessel pressure boundary. Fabrication of the vessel pressure boundary, mixing eductors, insulation supports, all nozzles and piping associated with active piping are included as scope. Internal and external components that will be abandoned in place, and do not affect pressure boundary, are excluded from the scope of this material requisition (MR) except for requiring material test reports for all components including those components which are abandoned in place. The vessels may include internals and appurtenances such as pulse jet mizers (PJMs), spargers, cooling jackets, wear plates, spare level instrumentation and other components because of the vessels being partially fabricated. Due to cost of removal, these internals and appurtenances will remain attached to the vessel, however, perforations will be made to some internals to minimize void space within the vessels. Portions of the appurtenances may be removed to accommodate new design features.

In case of conflict between any requirement in this specification and requirements in any other referenced document, the SELLER shall submit a Supplier Deviation Disposition Request (SDDR) for resolution. All deviations considered for incorporation must be submitted to the BUYER on a completed SDDR form for BUYER's approval.

The scope of work for the SELLER includes, but is not limited to, the following:

1.2.1 Perform all design, fabrication, and testing activities necessary on the WIP provided by the BUYER to meet the requirements contained in this specification and its associated reference documents and drawings.

1.2.2 Identify any defects or deficiencies in the existing WIP and notify BUYER for concurrence prior to the performance of any repair activities.

1.2.3 Furnish vessels and internal/external components in accordance with this specification. The SELLER shall provide the necessary equipment listed below that meets the requirements of this specification, applicable industry codes, and their design.

a) Vessels
b) Spray nozzle(s) or wash ring(s)
c) Eductor(s)
d) Vessel internal piping associated with spray nozzles/wash rings and eductors. Internal piping includes but not limited to external nozzle extensions, all pipe inside the vessels and associated pipe supports, requiring only connecting to BUYER's pipe system.
e) Maintainable vessel components (Platform, Ladder, Vessels Clips for Platform, and Pipe/Conduit Supports, etc.).
f) Insulation supports

For the purpose of this specification, the vessel internal piping is defined as piping between vessel internal components (spray nozzle/wash ring and eductors) and vessel nozzles.

1.2.4 Provide the documents, as submittals, required in this specification and reference specifications, per the G-321-E, Engineering Document Requirements, and G-321-V, Quality Verification Document Requirements forms attached to the Material Requisition (MR).

1.2.5 The SELLER may subcontract portions of the work, including any portion of the design, fabrication, manufacturing, or inspection, provided it meets the conditions of this specification.

1.3 Work by Others

The following items and services will be supplied by the BUYER and are not included in the SELLER's scope of work:

1.3.1 Installation at BUYER's facility including installation labor and interconnecting piping.

1.3.2 Instrumentation and controls (including installation).

1.3.3 Ring beam support for the vessels.

1.3.4 Vessel vent systems.

1.3.5 Utility (i.e. air, steam, service water, demineralized water and cooling water) supply systems.

1.3.6 Foundation and anchorage.

1.3.7 Thermal insulation

1.4 Acronyms

AISC	American Institute of Steel Construction
ASME	American Society of Mechanical Engineers

CM	Commercial Grade
DFLAW	Direct Feed Low-Activity Waste
EMF	Effluent Management Facility
MDS	Mechanical Data Sheet
MTR	Material Test Report
MR	Material Requisition
NDE	Non-Destructive Examination
NTE	Not-to-Exceed
OSHA	Occupational Safety and Health Administration
PIP	Process Industry Practices
PMI	Positive Material Identification
QAP	Quality Assurance Program
SC	Seismic Category
SDDR	Supplier Deviation Disposition Request
UBC	Uniform Building Code
WIP	Work in Progress
WTP	Hanford Tank Waste Treatment and Immobilization Plant

1.5 Safety/Quality Classifications

1.5.1 The components specified in this specification do not perform a safety function and are therefore identified with a "Commercial Grade (CM)" classification.

1.5.2 The vessels shall be designed as Seismic Category IV (SC-IV).

2 Applicable Documents

2.1 General

2.1.1 When specific chapters, sections, parts, or paragraphs are listed following a code, industry standard, or reference document, only those chapters, sections, parts, or paragraphs of the document are applicable and shall be applied.

2.1.2 For the codes and standards listed in Section 2.2, the specific edition year identified shall be followed. For the codes and standards that are incorporated by reference (daughter codes and standards), the referenced daughter edition or current edition shall be followed. If an edition year is not identified, the latest issue, including addenda, at the time of award shall apply.

2.1.3 The edition year listed in Section 2.2 shall apply to, and govern in case of conflict with, subsequent references to the codes and standards within the referenced documents in Section 2.3 and exhibits. In case of conflict between this specification and referenced codes and standards, the requirements for all must be met with the most stringent governing.

2.2 Codes and Standards

2.2.1 ASME B31.3-1996, *Process Piping*

2.2.2 ASME B46.1-1995, *Surface Texture (Surface Roughness, Waviness, and Lay)*

2.2.3 ASME Boiler and Pressure Vessel Code, Section II: *Materials* – 2001 A2003

2.2.4 ASME Boiler and Pressure Vessel Code, Section VIII, Div. 1: *Rules for Construction of Pressure Vessels* – 2001 A2003

2.2.5 ASME Y14.100, *Engineering Drawing Practices*

2.2.6 DOE 10 CFR Part 851, *Worker Safety and Health Program*

2.2.7 OSHA 29 CFR Part 1910, *Occupational Safety and Health Standards* - November 18th, 2016

2.2.8 UBC 1997, *Uniform Building Code*

2.2.9 ASCE 7-98, *Minimum Design Loads for Buildings and Other Structures*

2.2.10 ASTM A123, Standard Specification for *Zinc (Hot-Dip Galvanized) Coatings on Iron and Steel Products*

2.2.11 ASTM A143, *Standard Practices for Safegarding Against Embrittlement of Hot-Dip Galvanized Structural Steel Products and Procedure for Detecting Embrittlement*

2.2.12 ASTM A385, *Standard Practice for Providing High-Quality Zinc Coatings (Hot Dip)*

2.2.13 ASTM A653, *Standard Specification for Steel Sheet, Zinc-Coated (Galvanized) or Zinc-Iron Alloy-Coated (Galvannealed) by the Hot-Dip Process*

2.2.14 ASTM B695, *Standard Specification for Coatings of Zinc Mechanically Deposited on Iron and Steel*

2.2.15 SSPC-SP1, *Solvent Cleaning*

2.2.16 PIP INIC1000, *Cold Insulation Installation Details*

2.3 Reference Documents and Drawings

2.3.1 Reference Documents

2.3.1.1 24590-WTP-3PS-G000-T0003, *Engineering Specification for Packaging, Handling, and Storage Requirements*

2.3.1.2 24590-WTP-3PS-G000-T0014, *Engineering Specification for Supplier Design Analysis*

2.3.1.2.1 24590-WTP-3PN-G000-00072, *Engineering Specification for Design Analysis – Addition of Software Documentation.*

2.3.1.3 24590-WTP-LIST-ESH-16-0001, *Restricted Materials List*

2.3.1.4 24590-WTP-DC-ST-01-001, *Structural Design Criteria*

2.3.1.5 24590-WTP-3PS-MVB2-T0001, *Engineering Specification for Welding of Pressure Vessels, Heat Exchangers and Boilers**

2.3.1.6 24590-WTP-3PS-NN00-T0001, *Engineering Specification for Thermal Insulation for Mechanical Systems*

*Any reference to 24590-WTP-3PS-MV00-T0001 in this document should be replaced with Exhibit 6.

2.3.2 **Reference Drawings**

2.3.2.1 24590-WTP-MV-M59T-00001, *Pressure Vessel Tolerances Standard Details*

2.3.2.1.1 24590-WTP-MVN-M59T-00036, *Tolerance Changes for Weld-Connection Type Nozzle*

2.3.2.1.2 24590-WTP-MVN-M59T-00038, *Revised Standard Pressure Vessel Tolerances in Note A of Drawing*

2.3.2.2 24590-WTP-MV-M59T-00007, *Thermowell Connection Standard Details*

2.3.2.3 24590-WTP-MV-M59T-00009, *Lifting Lugs Standard Details*

2.3.2.4 24590-WTP-MV-M59T-00010, *Tailing Lug Standard Details*

2.3.2.5 24590-WTP-MV-M59T-00012, *Grounding Lug Standard Details*

2.3.2.6 24590-WTP-MV-M59T-00016001, *Vessel Connections Standard Details Sheet 1 of 3*

2.3.2.7 24590-WTP-MV-M59T-00016002, *Vessel Connections Standard Details Sheet 2 of 3*

2.3.2.8 24590-WTP-MV-M59T-00016003, *Vessel Connections Standard Details Sheet 3 of 3*

2.3.2.9 24590-WTP-MV-M59T-00017, *Vessel Inspection Manway Standard Details*

2.3.2.10 24590-WTP-MV-M59T-00018, *Vessel Name Plate Standard Details*

2.3.2.11 24590-WTP-MV-M59T-00026, *Anchor Bolt Chair Details for Vertical Vessels*

2.3.2.11.1 24590-WTP-MVN-M59T-00035, *Add Notes for Weld Size Tolerance and Three Sided Weld as Necessary Between the Plate Washer and Anchor Chair. Add Additional Weld Symbol Between the Plate Washers and the Top of the Anchor Chairs*

2.3.2.12 24590-WTP-PW-P30T-00001, *WTP End Prep Detail for Field Butt Welds*

2.3.2.12.1 24590-WTP-PWLN-P30T-00001*, Correct Typographical Error in Table 1*

2.3.2.13 24590-BOF-DD-25-00004, *Effluent Management Facility Vessel Support Ring Beam Details*

2.3.2.14 24590-BOF-DD-25-00012, *Effluent Management Facility Concrete Embedment Details Vessel Support Ring Beam Installation*

2.3.2.15 24590-BOF-MV-DEP-00006001*, Design Proposal Drawing Equipment Assembly Overhead Sampling Vessel DEP-VSL-00004A*

2.3.2.16 24590-BOF-MV-DEP-00007001*, Design Proposal Drawing Equipment Assembly Overhead Sampling Vessel DEP-VSL-00004B*

2.3.2.17 24590-BOF-MV-DEP-00008001*, Design Proposal Drawing Equipment Assembly Process Condensate Lag Storage Vessel DEP-VSL-00005A*

2.3.2.18 24590-BOF-MV-DEP-00008002, *Design Proposal Drawing Equipment Assembly Process Condensate Lag Storage Vessel DEP-VSL-00005A*

2.3.2.19 24590-BOF-MV-DEP-00009001*, Design Proposal Drawing Equipment Assembly Process Condensate Lag Storage Vessel DEP-VSL-00005B*

2.3.2.20 24590-BOF-MV-DEP-00009002*, Design Proposal Drawing Equipment Assembly Process Condensate Lag Storage Vessel DEP-VSL-00005B*

3 Design Requirements

3.1 General

The SELLER shall comply with Sections 1, 2, 3 and 4 of Exhibit 6, *Pressure Vessel Design and Fabrication*.

3.2 Basic Function

3.2.1 Unless otherwise specified, equipment shall be designed and fabricated in accordance with the drawings, design standard identified in the Mechanical Data Sheet (MDS), and any additional requirements of this specification. Any difference between SELLER's final design and BUYER's data specified in the MDS shall be identified to the BUYER for resolution.

3.2.2 Vessels shall be constructed to ASME Section VIII, Div. 1 requirements and shall have an ASME code stamp and National Board Registration.

3.2.3 Spray nozzle/wash ring requirements, for washing of the interior walls of the vessel, shall be provided as indicated on the vessel MDS.

3.2.4 Vessels shall have the ability to be flushed with demineralized water and 0.5 M nitric acid for decontamination. The vessels shall be designed to maintain functionality without degradation of the electrical, instrumentation, mechanical, or any other components involved.

3.2.5 Eductors for mixing contents inside of the vessel shall be provided as indicated on the vessel MDS and located per vessel Equipment Assembly drawings.

3.2.6 Vessel internal piping associated with eductors shall be free-draining and have no traps or pockets that can accumulate liquids or solids.

3.2.7 All removable vessel internals shall be fabricated for installation and removal through the specified vessel nozzles on the drawings. Note that any existing pulse jet mixers (PJMs) are not considered removable.

3.2.8 The vessels insulation thickness and material, as specified in section 3.2.9, shall be considered in determining nozzle projection.

3.2.9 The SELLER shall provide supports for the insulation per drawings from Process Industry Practices for Cold Insulation (reference 2.2.16). Insulation will be cellular glass with a density of up to 8.5lbs/ft^3 and will be jacketed with up to 0.024" thick stainless steel jacketing that will be banded. Vessel shall be designed to support weight of insulation, insulation supports, and jacketing. In addition to PIP INIC1000;

- Intermediate insulation support rings shall be installed every 6' and be welded to the vessel (applicable to vessel shell).
- The standoff distance for the rings shall match the insulation thickness of 3" (applicable to bottom vessel head and shell).
- Support rings shall extend 2" from vessel skirt. Bottom supports shall extend 2" minimum from vessel skirt (applicable to vessel skirt).

3.2.10 All engineering analyses and calculations provided as supplier submittals shall be in accordance with 24590-WTP-3PS-G000-T0014, *Engineering Specification for Supplier Design Analysis*.

3.3 Performance

3.3.1 General

3.3.1.1 Unless otherwise specified in the MDS, the SELLER shall propose any recommendations for equipment for BUYER review and approval prior to the initiation of fabrication activities and/or incorporation into the design of the equipment associated with the scope of work of this specification. Contact BUYER for proper avenue to submit recommendations.

3.3.1.2 The SELLER shall provide completed MDS for each equipment as indicated by the BUYER.

3.3.2 Vessels

3.3.2.1 The vessel skirt support shall be designed to support BUYER-specified ring beam design and with the same internal diameter as the vessel (References 2.3.2.13 and 2.3.2.14).

3.3.2.2 Vessels shall incorporate nozzle connections for temperature and level instrumentation as specified in BUYER-specified drawings (References 2.3.2.15 through 2.3.2.20).

3.3.3 Spray Nozzles

3.3.3.1 At a minimum, SELLER shall provide the following spray nozzle performance characteristics based on information specified in the vessel MDS.

a) Number of spray nozzles
b) Performance curve (flow vs. pressure)
c) Operating range (flow, pressure, and temperature)

3.4 Design Conditions

3.4.1 All vessels and associated equipment covered by this specification shall be designed for a minimum design life of 40 years, inclusive of maintenance. Design life of equipment shall consider the effects of chemical, radiological, and thermal exposure.

3.4.2 SELLER shall conform to BUYER's requirements for layout, and dimensions as shown in the drawings and the not-to-exceed (NTE) dimensions on the vessel MDS.

3.5 Loadings

3.5.1 Loads to be considered for the structural design of vessels, including vessel skirt support, and associated internal /external components shall be in accordance with applicable codes, standards, and reference documents listed in Section 2 of this specification.

3.5.2 SELLER shall include the location of the anchorage of the vessel skirt support in relation to the vessel outline drawings supplied to the BUYER. In addition to location, the SELLER shall provide the BUYER maximum anchorage loads for all load cases (including seismic).

3.5.3 SELLER shall complete a seismic analysis of the vessels and vessel components, including support skirt, welded anchor points, eductors, spray nozzles/wash rings, internal piping, and maintainable vessel components.

3.5.4 Seismic load capability requirements of the vessel components shall be calculated in accordance with Exhibit 2, *Structural Design Loads for Seismic Category IV Equipment and Tank*s.

3.5.5 Vessel seismic analysis shall be performed per the requirements of Exhibits 6, *Pressure Vessel Design and Fabrication*, Section 3.2 and Exhibit 7, *Seismic Qualification Criteria for Pressure Vessels*.

3.5.6 SELLER shall comply with nozzle loading requirements in Exhibit 6, *Pressure Vessel Design and Fabrication*, Section 3.7, Appendix A, Table A2 and Exhibit 9, *Refined Nozzle Loads*.

3.5.7 Platforms, ladders, and handrails shall meet 29 CFR 1910 Subpart D requirements as revised by the Occupational Safety and Health Administration (OSHA) on November 18th, 2016. Loads for platforms, handrails, and ladders are to be in accordance with Section 4.4.1 of Reference 2.3.1.4 and Section 4.4 of Reference 2.2.9 as listed below:

- 100 psf for minimum uniform load for platforms.
- For handrails, in accordance with UBC 1997, Table 16-B, *Special Loads*.
- For ladders, in accordance with ASCE 7-98, Section 4.4.2, *Loads*.

3.5.8 Weld pads may be required. They shall be designed using 25 psf for minimum allowance for dead loads due to piping, raceway and other permanent static loads in accordance with Section 4.3 of Reference 2.3.1.4.

3.6 Environmental Conditions

3.6.1 Vessels shall be designed, equipped, and furnished to be fully operational throughout the entire range between, and including the limits of, the minimum and maximum conditions specified on the vessel MDS. Vessels are located outdoors and are subject to snow, ash and wind loads.

3.6.2 Equipment target radiation level and average contact dose rate are as specified on the vessel MDS.

3.7 Accessibility and Maintenance

3.7.1 The design of the vessels shall support the ability to replace maintainable components (ladders, platforms, vessel clips for conduit supports, etc.) as shown on BUYER drawings.

3.7.2 SELLER shall design the vessel skirt support to provide means of gaining access for installation, maintenance, removal, and welding activities.

4 Materials

4.1 General

The SELLER shall comply with all requirements of Section 4 of Exhibit 6, *Pressure Vessel Design and Fabrication*.

4.2 Materials and Equipment

4.2.1 Provide equipment and components with the materials of construction as specified per this specification and on the listed data sheets in Part 2 of the MR. Where specific criteria are not provided, material selection shall be determined by the SELLER and have properties and composition suitable for the specific service conditions and consistent with this specification and its addenda.

4.2.2 Corrosion and erosion allowance are specified on the vessel MDS and shall be applied to each surface exposed to process liquid. Vessel internal components shall have the specified corrosion allowance applied to both internal and external surfaces.

4.2.3 The SELLER shall not substitute materials without written approval, via the SDDR, from the BUYER.

4.2.4 SELLER shall comply with the requirements in Exhibit 1, Positive Material Identification (PMI).

4.2.5 Carbon steel and stainless-steel materials shall not be stored in contact with one another.

4.2.6 Insulation support material shall be suitable for use in an outdoor environment and be constructed of stainless-steel components.

4.2.7 Ladders and platforms shall be galvanized per SSPC-SP1, ASTM A123, A143, A385, A653 and B695.

4.3 Construction

4.3.1 For vessels, classification of fabrication materials for bolts and nuts shall be in accordance with ASME Boiler and Pressure Vessel Code, Section II.

4.3.2 All piping, flanges, and pipe fittings shall comply with the requirements specified in Exhibit 8, *Technical Supply Conditions for Pipe, Fittings, and Flanges*.

4.4 Prohibited Materials

4.4.1 The materials listed in 24590-WTP-LIST-ESH-16-0001, Restricted Materials List shall not be used on any supplied equipment and shall not be brought onto WTP site.

4.4.2 Bronze, copper, lead, zinc, tin, antimony, cadmium, their alloys or materials containing such metals as their basic constituents, or molybdenum and halogens, shall not be used in direct contact with stainless steel.

5 Fabrication

5.1 General

5.1.1 The SELLER shall comply with requirements of Sections 5 and 6 of Exhibit 6, *Pressure Vessel Design and Fabrication*.

5.1.2 The SELLER shall fabricate vessels and associated components, in accordance with the BUYER standard details listed in Section 2.3.2 of this specification.

5.1.3 Fabrication of pipework shall be performed in accordance with Exhibit 5, *Shop Fabrication of Piping*.

5.1.4 Design and fabrication of vessel skirt support shall be in accordance with Exhibit 6, *Pressure Vessel Design and Fabrication*, Section 3.10 and 24590-WTP-3PS-MVB2-T0001, *Engineering Specification for Welding of Pressure Vessels, Heat Exchangers and Boilers*.

5.1.5 All fabrication shall be performed by personnel qualified in accordance with this specification (including exhibits) and applicable documents referenced in Section 2.

5.1.6 For the equipment supplied per this specification, except for vessel internal components retired in place, the SELLER shall ensure that all sharp edges are broken/smoothed and all burrs removed. Machined metal surfaces subjected to human touch through maintenance or operational reason shall be constructed to have no sharp edges unless it serves the function of the equipment.

5.1.7 Machined exposed metal surfaces (excluding internal components retired in place) shall have a surface finish of 125 microinches per ASME B46.1, *Surface Texture (Surface Roughness, Waviness and Lay)*, or better.

5.1.8 Nozzle connections in the piping system shall be butt welded, in accordance with 24590-WTP-PW-P30T-00001, *WTP End Prep Detail for Field Butt Welds*.

6 Tests and Inspections

6.1 General

6.1.1 The SELLER shall comply with all requirements of Section 7 of Exhibit 6, *Pressure Vessel Design and Fabrication* and Section 3.2 of Exhibit 5, *Shop Fabrication of Piping*.

6.1.2 The SELLER shall submit original set of radiographic film with associated technique and reader sheets in accordance with Section 7.2 of Exhibit 6, *Pressure Vessel Design and Fabrication* per G-321-E. Film shall be packaged to preclude moisture and handling damage.

6.2 Shop Tests

6.2.1 The SELLER shall not perform hydrotesting on piping (e.g. vessel internal piping). Refer to Exhibit 5, *Shop Fabrication of Piping*, Section 3.2.3.1 for hydrotesting on fabricating piping assemblies.

6.2.2 SELLER shall furnish blind flanges or other acceptable closures for the nozzles, as required for hydrotesting. Closures shall be removed after testing, unless they are required for shipment.

6.2.3 All test results shall be documented, certified, and submitted to the BUYER, in accordance with G-321-V, *Quality Verification Document Requirements* forms attached to the MR.

6.2.4 Vessel maintainable components (e.g., ladders, platforms, vessel clips for conduit supports, etc.) shall be tested to the same criteria as the parent vessel.

6.3 Non-Destructive Examination (NDE)

6.3.1 All pressure vessels shall meet the requirements for welding and non-destructive examination (NDE) from Sections 5.4, 6 and 7 of Exhibit 6, *Pressure Vessel Design and Fabrication* and 24590-WTP-3PS-MVB2-T0001, *Engineering Specification for Welding of Pressure Vessels, Heat Exchangers and Boilers.* This includes work previously performed on provided WIP.

6.3.2 All pipework shall meet the requirements for welding and NDE from the following specifications:

a) Exhibit 4, *General Welding and NDE Requirements for Supplier Fabricated Piping*
b) Exhibit 5, *Shop Fabrication of Piping*, Section 3.2
c) 24590-WTP-3PS-MVB2-T0001, *Engineering Specification for Welding of Pressure Vessels, Heat Exchangers and Boilers*

6.4 Inspection and Test Status

6.4.1 The SELLER shall maintain a system for identifying inspection and testing status of items and systems.

7 Preparation for Shipment

7.1 General Requirements

7.1.1 The SELLER shall comply with all requirements of Section 8 of Exhibit 6, *Pressure Vessel Design and Fabrication*.

7.1.2 The vessels shall be packaged, prepared for shipment, handled, and stored in accordance with 24590-WTP-3PS-G000-T0003, *Engineering Specification for Packaging, Handling, and Storage Requirements*; exclude any NQA-1 requirements.

7.1.3 All equipment shall be thoroughly cleaned of all debris, trash, weld splatter, loose mill scale, tools and foreign matter and dried in preparation for shipment.

7.2 Tagging and Marking

7.2.1 Tagging of equipment shall be per this specification and the applicable documents listed in Section 2 and Exhibits of this specification. Plant item numbers shall be per the MDS. In case of conflict, SELLER shall submit a report identifying any deviations and/or conflicts on an SDDR form, attached to the MR.

7.2.2 Slinging points and orientation for storage shall be clearly marked.

7.2.3 A stainless steel nameplate shall be rigidly attached to the vessels in a prominent position for ease of visibility, unless a location is indicated on the drawings. The nameplate physical location shall be visible after insulation is installed. Nameplates shall include the following, in addition to all markings mandated by ASME Boiler and Pressure Vessel Code Section VIII at a minimum:

a) Manufacturer's name
b) Shop location
c) Date of manufacture
d) Serial number
e) Equipment name and tag number
f) Weight of assembly
g) Purchase order number

8 Quality Assurance

The SELLER's manufacturing Quality Assurance Program (QAP) applicable to production of standard product offerings is acceptable to meet the requirements of this procurement.

9 Configuration Management

Equipment and/or components covered by this specification are identified with Plant Item Numbers shown in the listed MDS in Part 2 of the MR. Each item shall be identified in accordance with Section 7.2 of this specification. Configuration management is maintained by conformance to approved drawings and procedures.

10 Documentation and Submittals

10.1 General

10.1.1 SELLER shall submit to BUYER all detailed designs, drawings, documentation, procedures, instructions, calculations, analyses, manufacturer documentation, manufacturer data, inspection reports, test reports, certificates, and manuals required per this specification, the applicable codes, standards, and reference documents in Section 2 of this specification, and the MR.

10.1.2 Documentation shall be submitted to BUYER as summarized on the G-321-E, Engineering Document Requirements, and G-321-V, Quality Verification Document Requirements forms attached to the MR.

10.1.3 Interim reviews shall be presented by the SELLER upon reaching or completing specific milestones as indicated in the "Remarks" column on the G-321-E, Engineering Document Requirements form attached to the MR. Interim review discussions are intended to help clarify interface points in system requirements, review design and design progress, and resolve outstanding issues.

10.1.4 The SELLER is encouraged to provide to the BUYER copies of documentation or information that is expected to be discussed and presented at the design review prior to the scheduled meeting. The SELLER shall participate in the design review and present the design, including discussion of provided submittals. Following the review meeting, the BUYER will formally transmit to the SELLER any comments or other requests on the appropriate design documentation. The SELLER is required to provide a response/resolution to the BUYER's comments. The SELLER shall be responsible for producing and submitting meeting minutes, as a formal document of record. The meeting minutes shall include, at a minimum, a list of actions, actionees, and a documented record of agreed comments from the meeting.

10.1.5 The first interim design review (30%) commences when calculations, drawings and general engineering deliverables are completed. The second interim design review (60%) will be held during the fabrication stage. The final interim design review (90%) will start once fabrication is completed and prior to shipment. All reviews will be conducted at the SELLER's facility per remarks on G-321-E.

10.1.6 Each document to be submitted shall be listed on the 15EX form. This form tracks the scheduled and actual delivery of each submittal. The form shall be submitted per the G-321-E.

10.1.7 SELLER shall submit their Quality Assurance (QA) program manual (Section 8).

10.1.8 All drawings shall be produced per the drawing practices set forth in ASME Y14.100, *Engineering Drawing Practices*.

10.2 Submittals

10.2.1 Schedule and Drawing Index

SELLER shall develop, and deliver to the BUYER, a schedule detailing the chronological sequence of activities required to meet the equipment delivery date. At a minimum, the schedule shall cover equipment design, procurement, fabrication and manufacture, tests and inspections,

verifications and hold points, and production deliverables. In addition, a drawing index (Form 15EX) shall be submitted at this time.

10.2.2 **Data Sheets**

SELLER shall provide completed Mechanical Data Sheets as listed in Part 2 of the MR.

10.2.3 **Drawings**

10.2.3.1 **Outline Drawings**

SELLER shall provide drawings with outline dimensions, services, foundations, and mounting details. Drawing shall show internal components with internal piping In addition, drawings shall show external envelope, including lugs, and centerline(s), fluid and other service connections, isometrics, insulation supports and details related to vessel skirt support. SELLER shall provide support requirements for the vessels (e.g. vessel skirt access points) to support BUYER's ring beam design.

In addition, shop detail drawings shall meet the requirements from the following:

a) Exhibit 5, *Shop Fabrication of Piping*, Sections 1.9.2.2 and 1.9.3.1.
b) Exhibit 6, *Pressure Vessel Design and Fabrication*, Section 9.2.1.
c) Section 3.5.2 of this specification

10.2.3.2 **Shop Detail Drawings and Bill of Materials (BOM)**

SELLER shall provide shop detail drawings with sufficient detail to facilitate fabrication, manufacture, or installation. This includes a complete Bill of Materials (BOM), pipe spool drawings, internal piping, cross-section details, and structural details.

In addition, shop detail drawings shall meet the requirements from the following:

a) Exhibit 5, *Shop Fabrication of Piping*, Sections 1.9.2.2 and 1.9.3.1.
b) Exhibit 6, *Pressure Vessel Design and Fabrication*, Section 9.6.

10.2.3.3 **Vessel Nozzle Locations**

SELLER shall provide vessel nozzle locations to interface with BUYER-supplied piping.

10.2.3.4 **Scope Delineation Drawing**

SELLER shall provide drawings that clearly depict the scope of work outlined in this specification and the associated drawings and datasheets. These drawings shall show existing WIP that is not subject to work outlined in this specification and associated documents as "ghosted" (in dashed lines) or otherwise clearly distinguished from components that are included in the scope of work, which shall be represented with solid lines.

10.2.4 **Lists**

10.2.4.1 **Material List**

SELLER shall provide a material list with specific model number, manufacturer, and catalog cut sheets for all equipment.

10.2.4.2 **Recommended Spare Parts List**

SELLER shall provide a list of recommended spare parts and supplies for maintainable vessel components required for maintenance and repair to ensure continued service or operation without unreasonable delays, including the cost of each item. The SELLER shall provide a list of startup and commissioning spares, including all components or equipment that may be needed during startup and commissioning.

10.2.4.3 **Nameplates**

SELLER shall provide a drawing for all nameplates.

10.2.5 **Product Data**

10.2.5.1 **Inspections and Test Plans**

SELLER shall provide a detailed description of their work inspections and tests planned during the receipt of materials, manufacturing, testing, and conformance verification activities. SELLER shall include identification of witness and hold points. In addition, SELLER shall provide inspection and test plans in accordance with Exhibit 6, *Pressure Vessel Design and Fabrication*, Section 9.7.

10.2.5.2 **Structural Support Requirements**

SELLER shall provide structural support data and drawings with recommended support locations for vessels (i.e., load points, weight distribution, and maximum weight, geometry of equipment, and location of center gravity).

10.2.5.3 **Transportation and Shipping Documentation**

SELLER shall provide drawings and a proposed tie down plan for applicable items in accordance with 24590-WTP-3PS-G000-T0003, *Engineering Specification for Packaging, Handling, and Storage Requirements*, Section 11.2.

10.2.6 **Manuals**

10.2.6.1 **Installation Instruction Manual**

SELLER shall submit an Installation Instruction Manual with drawings and procedures required for safe assembly and installation of material, including any explanations for special tools in accordance with 24590-WTP-3PS-G000-T0003, *Engineering Specification for Packaging, Handling, and Storage Requirements*, Section 11.1.1.

10.2.6.2 **Maintenance Manuals and Instructions**

SELLER shall submit maintenance manuals with detailed written instructions to disassemble, reassemble, and maintain components. Manuals shall include specific instructions, procedures,

and illustrations for preventative and corrective maintenance. Provide a list of special tools required for maintenance and repair of components.

Corrective maintenance manuals shall include the manufacturer's procedures and instructions for correcting problems and making repairs. Provide a troubleshooting guide and diagnostic techniques, maintenance and repair procedures, removal and replacement instructions for components, identification of all parts of end items subject to replacement (including special hardware requirements), warranty information, and personnel training requirements for operating and maintaining equipment.

10.2.6.3 **Site Storage, Handling, and Maintenance Requirements Manual**

SELLER shall submit a Site Storage, Handling, and Maintenance Requirements Manual with procedures and instructions for site storage, handling, and maintenance that will preserve equipment until it is put into operation in accordance with 24590-WTP-3PS-G000-T0003, *Engineering Specification for Packaging, Handling, and Storage Requirements*, Section 11.1.2.

10.2.7 **Procedures**

10.2.7.1 **Welding and NDE Procedures and Qualifications**

SELLER shall provide weld procedure specifications, procedure qualification records, weld inspection, NDE procedures, weld repair procedures, weld repair plan and personnel qualifications in accordance with the following:

a) 24590-WTP-3PS-MVB2-T0001, *Engineering Specification for Welding of Pressure Vessels, Heat Exchangers and Boilers*, Section 4.
b) Exhibit 6, *Pressure Vessel Design and Fabrication*, Sections 5.4 and 7.2.
c) Exhibit 4, *General Welding and NDE Requirements for Supplier Fabricated Piping*, Sections 4 and 13.3.
d) Exhibit 5, *Shop Fabrication of Piping*, Sections 1.9.2.4 and 1.9.2.5.

10.2.7.2 **Material Control Procedures**

SELLER shall provide material control procedures including controlling issuance, handling, storage, and traceability of materials such as weld rod.

10.2.7.3 **Cleaning Procedures and Qualifications**

Include procedure for descaling after hot working or heat treatment per Exhibit 6, *Pressure Vessel Design and Fabrication*, Section 8.1.2.

In addition, SELLER shall provide cleaning procedures per Exhibit 5, *Shop Fabrication of Piping*, Section 1.9.2.7.

10.2.7.4 **Positive Material Identification (PMI) Procedures**

SELLER shall submit procedures covering how PMI will be conducted and documented per Exhibit 1, *Positive Material Identification (PMI)*, Section 3.2.

10.2.7.5 **Pipe Bending Procedures and Records**

SELLER shall submit pipe bending procedures and bend qualification records as applicable per Exhibit 6, *Pressure Vessel Design and Fabrication*, Section 5.1.10 and Exhibit 5, *Shop Fabrication of Piping*, Section 1.9.2.9, and Exhibit 3, *Cold Bending of Pipe, Sections 5 and 10.2*.

10.2.7.6 **Inspection Procedure**

SELLER shall provide inspection procedures for the purpose of determining that specified requirements (e.g. dimensions, properties, performance results, etc.) are met.
In addition, SELLER shall provide measurement and inspection procedures per Exhibit 5, *Shop Fabrication of Piping*, Sections 1.9.2.12, 1.9.2.14, and 1.9.2.17.

10.2.7.7 **Heat Treatment Procedure**

SELLER shall submit a procedure for heat treatment per Exhibit 6, *Pressure Vessel Design and Fabrication*, Sections 7.1.5 and 8.12.

10.2.7.8 **Pressure Test Procedure**

SELLER shall submit pressure testing procedures including hydro, air, leak, separation, or vacuum test procedures for performing hydrostatic or pneumatic structural integrity and leakage tests per Exhibit 6, *Pressure Vessel Design and Fabrication*, Sections 7.3 and 7.4, and Section 6.2 of this specification.

10.2.7.9 **Hardness Testing Procedure**

SELLER shall submit a procedure for hardness testing per Exhibit 6, *Pressure Vessel Design and Fabrication*, Section 7.1.3.

10.2.7.10 **Wall Thickness Measurement Procedure**

SELLER shall submit a procedure for wall thickness procedure per Exhibit 5, *Shop Fabrication of Piping*, Sections 1.9.2.12 and 1.9.2.17.

10.2.7.11 **Coating Procedures**

SELLER shall prepare a detailed written procedure for material receiving, marking, storage, handling, surface preparation, environmental control, application, curing, inspection, testing, touch-up/repair, application personnel qualification, inspector qualification. The procedure shall be submitted and reviewed with BUYER's permission to proceed prior to the start of coating Work.

10.2.8 **Reports**

10.2.8.1 **Seismic Analysis**

SELLER shall provide a seismic analysis as required in Section 3.5.3 of this specification. Analysis shall demonstrate suitability of materials, components, or systems in relation to the conditions imposed by the stated seismic criteria.

10.2.8.2 **NDE Records**

SELLER shall keep records and submit reports pertaining to NDE, base materials, filler materials, fabrication, and inspection in accordance with Exhibit 6, *Pressure Vessel Design and Fabrication*, Section 9.4 and 24590-WTP-3PS-MVB2-T0001, *Engineering Specification for Welding of Pressure Vessels, Heat Exchangers and Boilers*, Section 11.

10.2.8.3 **Test Reports for Vessels and Piping**

SELLER shall supply quality records and test results for the following items in accordance with Exhibit 6, *Pressure Vessel Design and Fabrication*, Section 9. Test reports shall include, but not limited to:

a) Heat treat reports.
b) Ultrasonic examination and verification reports.
c) Radiographic examination and verification reports.
d) Liquid penetrant examination and verification reports.
e) Pressure testing and verification reports.
f) Inspection and verification reports.
g) Mechanical test reports.

SELLER shall supply NDE test reports in accordance with the following:

a) Exhibit 4, *General Welding and NDE Requirements for Supplier Fabricated Piping*, Section 13.2.1.
b) Exhibit 5, *Shop Fabrication of Piping*, Sections 1.9.2.5, 1.9.3.4 and 1.9.3.5.
c) 24590-WTP-3PS-MVB2-T0001, *Engineering Specification for Welding of Pressure Vessels, Heat Exchangers and Boilers*, Section 12

10.2.8.4 **ASME Data Reports**

SELLER shall provide ASME Boiler and Pressure Vessel Code Section VIII data reports in accordance with Exhibit 6, *Pressure Vessel Design and Fabrication*, Section 9.5.

10.2.8.5 **Positive Material Identification (PMI) Reports**

SELLER shall submit PMI testing reports, including a PMI map per Exhibit 1, *Positive Material Identification (PMI)*, Section 6.

10.2.8.6 **Material Test Reports**

SELLER shall submit material test reports (MTR) in accordance with the following:

a) Exhibit 4, *General Welding and NDE Requirements for Supplier Fabricated Piping*, Section 6.5.
b) Exhibit 5, *Shop Fabrication of Piping*, Section 1.9.3.2.
c) Exhibit 6, *Pressure Vessel Design and Fabrication*, Section 4.1.1.
d) 24590-WTP-3PS-MVB2-T0001, *Engineering Specification for Welding of Pressure Vessels, Heat Exchangers and Boilers*, Section 6.1.4.
e) Exhibit 8, *Technical Supply Conditions for Pipe, Fittings, and Flanges*, Section 8.

Material test reports shall be supplied for all alloy and stainless steel construction materials that make up vessels.

10.2.8.7 **Wall Thickness Measurement Reports**

SELLER shall submit wall thickness measurement reports per Exhibit 5, *Shop Fabrication of Piping*, Section 1.9.3.7.

10.2.8.8 **Hardness Test Reports**

SELLER shall submit hardness test reports, where required, per Exhibit 6, *Pressure Vessel Design and Fabrication*, Section 7.1.

10.2.8.9 **Ferrite Data**

SELLER shall submit ferrite data on welding materials in accordance with the following:

a) 24590-WTP-3PS-MVB2-T0001, *Engineering Specification for Welding of Pressure Vessels, Heat Exchangers and Boilers*, Section 6.1.
b) Exhibit 4, *General Welding and NDE Requirements for Supplier Fabricated Piping*, Section 6.3.

10.2.8.10 **Obstruction Reports**

SELLER shall certify in writing, via a verification report, that all internals are free from obstruction in accordance with Exhibit 6, *Pressure Vessel Design and Fabrication*, Section 7.5.

10.2.8.11 **Spray Nozzle Performance Reports**

SELLER shall provide a test report of each model/type of spray nozzle to list and demonstrate that the equipment meets the performance criteria listed in Section 3.3.3.1 of this specification.

10.2.8.12 **Certificates and Inspection Reports**

SELLER shall provide certificates and inspection reports which correspond with section 10.2.7.6, and for the following activities, as applicable:

a) Section 2.2, Coating work per applicable standards in this specification,
b) Exhibit 5, Sections 1.9.2.9, 1.9.2.15, 1.9.3.7 and 5
c) Exhibit 6, section 9.7, Work inspection reports

10.2.8.13 **Record of any Major Weld Repairs**

SELLER shall submit a record for any major weld repairs per Exhibit 5, *Shop Fabrication of Piping*, Section 1.9.3.8 and 24590-WTP-3PS-MVB2-T0001, *Engineering Specification for Welding of Pressure Vessels, Heat Exchangers and Boilers*, Section 4.7.

10.2.8.14 **Weld Map**

SELLER shall submit a weld map for each weld in accordance with 24590-WTP-3PS-MVB2-T0001, *Engineering Specification for Welding of Pressure Vessels, Heat Exchangers and Boilers*, Sections 4.1.6 and 11. Include NDE/PMI maps on the weld map drawings. Note that this requirement includes all existing pressure boundary welds on the WIP, however, does not include welds on internals that are abandoned in place.

10.2.8.15 **Analysis and Design Report**

SELLER shall provide analysis and design reports, including analytical data (stress, fluid dynamics, etc.), which demonstrates that an item satisfies all specified requirements per Exhibit 6, *Pressure Vessel Design and Fabrication*, Section 9.5.

10.2.8.16 **Deleted**

10.2.9 **Calculations and Analysis**

10.2.9.1 **Nozzle Loading Calculation**

SELLER shall submit nozzle loading calculations in accordance with Exhibit 6, *Pressure Vessel Design and Fabrication*, Section 9.2.

10.2.9.2 **Code Calculation**

SELLER shall submit code calculations in accordance with Exhibit 6, *Pressure Vessel Design and Fabrication*, Section 9.2.

10.2.9.3 **Lifting and Erection Calculations**

SELLER shall submit lifting and erection calculations in accordance with 24590-WTP-3PS-G000-T0003, *Engineering Specification for Packaging, Handling, and Storage Requirements*, Sections 9.1 and 9.2, and Exhibit 6, *Pressure Vessel Design and Fabrication*, Section 9.2.

10.2.9.4 **Transport Calculations**

SELLER shall submit Transport calculations in accordance with 24590-WTP-3PS-G000-T0003, *Engineering Specification for Packaging, Handling, and Storage Requirements*, Sections 4.4 and 8.5.

EXHIBIT 1 | POSITIVE MATERIAL IDENTIFICATION (PMI)

Specification 24590-WTP-3PS-G000-T0002, REVISION 9 was used as applicable to create the following exhibit.

Note: All References on this exhibit are inclusive to this exhibit only.

Specification	Requirement
1 Scope	This exhibit covers the minimum requirements for and the extent of application of Positive Material Identification (PMI) testing of shop fabricated pressure retaining equipment and piping. This exhibit applies to shop fabrication only.
3 Technical Requirements	
3.1 General	The purpose of PMI is to provide evidence that the materials are correctly supplied as specified by project documents. PMI is required for shop-fabricated items fabricated from the alloys identified in Table 1. When required by this exhibit, PMI testing will be done on each component of a pressure retaining assembly. This shall include each individual segment of pipe, each plate, and all other pieces of base materials (e.g., forgings, fittings, and tubing) and all required pressure retaining welds. For purposes of this exhibit, the following definitions are used: Alloy: Metallic materials (including welding filler materials) which contain alloying elements including but not limited to: Chromium (Cr), Nickel (Ni), Molybdenum (Mo), Copper (Cu) or Tungsten (W). 300 Series Stainless: Austenitic Stainless Steels (304L, 316L, etc.) 6 % Mo: AL6XN, 254 SMO, etc. Duplex Stainless Steel: CD4MCu, etc. Nickel Base: Alloy C-22, 625, 690, etc.
3.2 Responsibility	The Seller shall submit to the Buyer, for review and comment prior to fabrication, procedures covering how PMI will be conducted and documented. The Seller's procedures shall include the instrument manufacturer's procedures and requirements, operator qualification/re-qualification requirements, instrument calibration method(s), calibration frequency during testing, criteria for acceptance or rejection, material identification method, and record keeping.
3.3 Verification Method	
3.3.1	Instruments used for PMI shall be of the type that will provide quantitative, recordable, elemental composition results for positive identification of the alloy elements present. a) PMI shall be done per the procedures outlined by the manufacturer of the PMI instrument being used. Modification of these procedures must be approved by the Buyer. b) Each PMI instrument shall be calibrated according to the manufacturer's requirements.
3.3.2	The methods/instruments listed below are acceptable. In application, they must not be used in a "go-no-go" mode. The only acceptable objective is the positive identification, listing, and quantification of the relevant elements listed in Section 7.

Specification	Requirement
	a) Portable X-ray fluorescence analyzers. Use is limited to the following instruments or their equivalent unless prior approval is given by the Buyer: • TN Technologies Alloy Analyzer 9266, 9277 (The Metallurgist XR) or 9288 • Outokumpu X-Met 840, or X-Met 880 • Niton Alloy Analyzer (800 Series) • Thermo Scientific Niton XL3t Analyzer • Metorex X-Met 920, X-Met 3000TA or X-Met 3000TX Metal Analyzer • Innov-X Systems XT Series Analyzer • Innov-X Systems Alpha 6500 Series Analyzer • Innov-X Systems Delta Model DP-2000, DS-2000, or DC-200 Analyzer b) Portable optical emission analyzers. Use is limited to the following instruments or their equivalent unless prior approval is given by the Buyer: • SpectroPort Model TP-07 or TFO-02 • Outokumpu ARC-MET 900 or the New Spectrotest • SpectroLab, Spectrotest and Spectrotest Jr. Any other instrument will require Buyer's approval via the submittal process. Note: Arc strikes, if any, need not be removed.
3.3.3	In lieu of using portable instruments, chemical analysis can be performed on actual material samples. Care must be exercised while collecting samples, as contamination can be contributed by the removal tools. Sample extraction shall not weaken or reduce the functionality of the component. Laboratory analysis reports shall be traceable to the individual component from which the sample was taken (See Section 6, below).
3.3.4	Parts that are too small to be tested using an alloy analyzer are exempt from PMI testing. If such exemption is claimed, the PMI procedure shall specify the minimum part size capable of being tested.
3.4 Welding Consumable Control	In addition to PMI testing required by this exhibit, the Seller shall have in place, and implement, welding consumable material control systems that can be verified by auditing. PMI of completed pressure retaining welds is required as indicated in Table 1. Production "Run Off" weld test coupons may be used for chemical analysis checks.
4 Extent of PMI	PMI shall be performed on completed equipment, or assembled parts of equipment, at such time as to ensure that only verified materials have been used in the fabrication and final assembly of components. If the assembled equipment configuration prevents PMI of any individual part, then that part shall be tested prior to assembly and be noted as such on the PMI documentation.
4.1 Vessels, Exchangers, Tanks, Filters and other Manufactured Equipment	Vessels, exchangers, and other manufactured equipment shall have PMI testing performed at the Seller's facilities. This shall include piping and components supplied as part of an equipment "package" or skid.
4.2 Shop Fabricated Piping	
4.2.1	PMI is required for all piping and piping components, circumferential pressure retaining welds, and non-autogenous longitudinal welds as indicated in Tables 1 and 2. Note that to the greatest extent possible (considering minimum size restraints of the PMI analyzer), the requirements for examining tubing are equivalent to that of piping.
4.2.2	PMI is not required on autogenous welds, fillet welds, or socket welds.

Specification	Requirement
4.4 Valves and Pumps	PMI of valves and pumps is required for materials as indicated in Table 1 and piping fluid codes as indicated in Table 2.
4.5 Bulk Materials (Straight Run Piping, Fittings, Stock Valves, Etc.)	PMI is required as indicated in Table 1. Table 2 does not apply.
5 Identification	
5.1 General	All shop-fabricated items/pieces that have been successfully subjected to the required PMI shall be marked. The mark shall be durable and last through transportation and receiving inspection at the Buyer's facility. See Section 7 for items that do not pass PMI.
5.2 Marking Materials	Marking materials and adhesive tape selected shall not cause corrosion or other harmful effects. Requirements for marking materials: • The total chloride/fluoride content shall not exceed 200 ppm. • The total sulfur content shall not exceed 400 ppm. • The total of low melting point metals such as lead, zinc, copper, tin, antimony, and mercury shall not exceed 1 percent; of this, mercury shall not exceed 50 ppm.
5.3 Equipment and Equipment Components	When it has been verified that the material has a composition consistent with the material specified, then it must be stamped with letters "PMIV". Use low stress stamps for identification. Items that cannot be stamped shall have an alternate system of marking. Heat exchanger tubing shall not be stamped. Any alternate system, and the items for which it will be used, must have Buyer approval. To the maximum extent possible, the stamping/marking shall be located for ease of future reference/verification.
5.4 Piping Materials	When it has been verified that the material has a composition consistent with the material specified, then a colored adhesive tape, or other approved marking method, shall be applied at one end to facilitate proper identification.
5.5 Fasteners and Small Parts	Fasteners and small parts shall be marked in accordance with the Seller's procedure using a hard marking method, an indelible ink, or paint.
6 Records of PMI	Results shall be recorded on PMI report forms, which shall indicate, as a minimum, the following for each examination: a) Name of inspector b) Date of testing c) Test method, including PMI instrument name and serial number d) Equipment tag number or pipe spool number (PO number for bulk items) for the specific piece tested e) Quantitative analysis results for relevant elements (see Section 7) A PMI map consisting of assembly and sub-assembly drawings shall be prepared for each piece of fabricated equipment or pipe spool. The map shall include components and welds and show the locations of PMI testing. An extended Shop Spool Sheet shall be provided for each individual spool number where PMI was done. In the case of bulk items, PMI results may be submitted in the form of a certificate verifying that parts were tested according to the requirements of this exhibit. Results shall be reported by heat/lot and shall include the following: a) Name of inspector

Specification	Requirement
	b) Date of testing c) Test method, including PMI instrument name and serial number d) Type and number of pieces tested e) Acceptable composition ranges for the relevant elements (see Section 7) f) Material identified PMI forms shall become a part of the permanent inspection records. Seller shall submit the completed forms as part of the Final Document Package when required by the Form G-321 - V in the Purchase Order.
7 Acceptance, Rejection and Retesting Requirements	All materials tested shall be identified by the PMI instrument as being consistent with the composition of the specified material. The results shall fall within the chemical composition requirements of the ASTM, AWS or other applicable material specification allowing for the accuracy of the instrument. Any questionable PMI result shall be re-analyzed by the same or another instrument, after verification of proper surface preparation. See Section 7.1, below, for materials and welds that fail to meet requirements on the second analysis. The following elements shall be identified and recorded, even if the instrument does provide immediate identification (e.g. display of "316", "6 Mo", etc.): Alloy — Elements 304, 304L — Ni, Cr 316, 316L — Ni, Cr, Mo 347 — Ni, Cr, Nb Duplex, 6% Mo, 254 SMO, AL6XN, etc. — Ni, Cr, Mo, Cu Nickel base alloys, C-22, 625, 690, etc. — Ni, Cr, Mo, W Welds joining dissimilar base materials or having filler materials that do not match the base material composition may include an allowance for dilution. Acceptable composition ranges for commonly used combinations of base material and weld filler metals are included in Table 3. Other combinations, when required, shall be identified to the Buyer for approval. Please note that the only proper use of Table 3 is for assessing dissimilar welds.
7.1	If any material, component, or weld of a type not requiring 100% testing is found to be unacceptable, all other materials, components, or welds (same heat, lot, etc.) represented by that failed item shall be considered suspect. The Buyer shall be notified immediately if a component is confirmed to have failed the PMI. The Seller will then have the following options, with Buyer concurrence: a) Scrapping/removing all materials, components, or welds represented by the test piece (all of that heat, lot, etc.) and replacing with new components or filler metals, or b) Performing 100 percent examination of the remainder of the represented materials, components, or welds, and replacing each item that fails the PMI check, or c) Verifying correct chemistry by laboratory chemical analysis.
7.2	If questionable values obtained with portable analyzers are verified by laboratory analysis, the laboratory analysis data shall be used and recorded.
7.3	Any item or component containing materials that have not passed the PMI shall be clearly marked as "DO NOT USE — PMI FAILED" and segregated from the remainder of the stock.

Specification	**Requirement**
Table 1 PMI Requirements for Shop Fabricated Items/Pieces	**Table 1 PMI Requirements for Shop Fabricated Items/Pieces**

ITEM - (NOTE 1)	VERIFICATION REQUIRED
Type 304 & 304L Stainless Steel Components	No
Type 316, 316L, & 347 Stainless Steel Components	Yes – 100%
6% Mo Components	Yes – 100%
Duplex Stainless Steel Components	Yes – 100%
Nickel Base Alloy Components	Yes – 100%
Alloy Valves	Yes – 100% Body and Bonnet Only
Alloy Pumps	Yes – 100% Casing Only
Alloy Piping – including non-autogenous longitudinal welds (Spools, Fittings, Straight-Run Pipe, and Tubing)	Yes – 100% for 6 % Mo alloys and Nickel base alloys Yes – 100% for 316L, used in the fluid codes listed in Table 2
Alloy Pressure Retaining Welds	Yes – 100% of completed welds that join material required to have PMI testing
Bolting — B8M used for Pressure Retaining Connections	Yes – 5 % of total bolts, minimum one check per heat
Alloy Heat Exchanger Tubing	Yes – 5 % of total tubes, minimum one check per heat
Venturis	Yes – 100% pipes and welds

Note:
1. The following items are exempted unless specifically designated for PMI by the Purchase Order:

   a) All type 304L stainless steel components, piping, and welds
   b) Deleted
   c) Non pressure-retaining parts, such as baffles, trays, tray clips, supports, pall-rings, support rings, etc.
   d) Non pressure-retaining welds and sections of piping, such as drains, vents, overflows, etc.
   e) Gaskets
   f) Instrumentation (except when the instrument is a shop fabricated piping component placed in-line of a piping system requiring PMI)
   g) Internal instruments parts (including pressure retaining parts)
   h) Instrument tubing less than 1/2 inch in diameter
   i) HVAC ducting
   j) Piping components located within piping systems for which PMI is NOT required.

Table 2 Fluid Codes Requiring PMI Testing (Shop	

Specification	Requirement
Fabricated Piping and Piping System Components)	
Table 3 Base Material and Weld Filler Metal Composition Requirements (Wt%)	

Table 2 Fluid Codes Requiring PMI Testing (Shop Fabricated Piping and Piping System Components)

Fluid Code		Fluid Code		Fluid Code	
DR	Suspect Radioactive Steam	GU	Nitric Acid Fume	GV	Vessel Vent Radioactive
HN	Nitric Acid	HR	Recovered Nitric Acid	PA	Radioactive Aqueous
PB	LAW Feed	PC	HLW Feed Slurry	PE	Entrained Solids Concentrate
PF	Cs/Tc Concentrate	PH	LAW Melter Feed	PJ	HLW Melter Feed
PP	Ultrafilter Permeate	PR	Suspect Radioactive Liquid	PS	Suspect Radioactive Slurry
PU	Suspect Radioactive Gas/Vapor	PV	Strontium Carbonate	PW	Radioactive Gas/Vapor
PX	Radioactive Slurry	PZ	Waste Feed	RK	Sodium Permanganate
ZE	Plant Wash Fluid	ZF	Plant Washings	ZH	Acidic Effluent
ZJ	Alkaline Effluent	ZL	Spent IX Resin	ZN	Neutralized Effluent
ZR	Suspect Radioactive Condensate	ZS	Process Radioactive Condensate	ZX	Special Decontaminant
ZY	Scrubber Effluent				

Table 3 Base Material and Weld Filler Metal Composition Requirements (Wt %)

MATERIAL	Cr	Ni	Mo	Cu	W	Notes
304L BM	18.0 - 20.0	8.0 - 12.0	---	---	---	
308L WFM	19.5 - 22.0	9.0 - 11.0	0.75 max	---	---	E/ER308L & LT
304L Welds	18.0 - 22.0	8.0 - 12.0	0.75 max	---	---	Note 1
304L BM	18.0 - 20.0	8.0 - 12.0	---	---	---	
316L BM	16.0 - 18.0	10.0 - 14.0	2.0 - 3.0	---	---	
316L WFM	17.0 - 20.0	11.0 - 14.0	2.0 - 3.0	---	---	E/ER316L & LT
304L/316L Welds	16.0 - 20.0	8.0 - 14.0	3.0 max	---	---	Note 1
304L BM	18.0 - 20.0	8.0 - 12.0	---	---	---	
316L BM	16.0 - 18.0	10.0 - 14.0	2.0 - 3.0	---	---	
308L WFM	19.5 - 22.0	9.0 - 11.0	0.75 max	---	---	E/ER308L & LT
304L/316L Welds	16.0 - 22.0	8.0 - 14.0	3.0 max	---	---	Note 1
304L BM	18.0 - 20.0	8.0 - 12.0	---	---	---	
308L WFM	19.5 - 22.0	9.0 - 11.0	0.75 max	---	---	E/ER308L & LT
CD4MCu BM	24.5 - 26.5	4.75 - 6.0	1.75 - 2.25	2.75 - 3.25	---	
304L/CD4MCu Welds	18.0 - 26.5	4.75 - 12.0	2.0 max	---	---	Note 1

Specification	Requirement
Table 3 Base Material and Weld Filler Metal Composition Requirements (Wt%)	

Table 3 Base Material and Weld Filler Metal Composition Requirements (Wt %) (cont.)

MATERIAL	Cr	Ni	Mo	Cu	W	Notes
316L BM	16.0 - 18.0	10.0 - 14.0	2.0 - 3.0	---	---	
316L WFM	17.0 - 20.0	11.0 - 14.0	2.0 - 3.0	---	---	E/ER316L & LT
316L Welds	16.0 - 20.0	10.0 - 14.0	2.0 - 3.0	---	---	Note 1
316L BM	16.0 - 18.0	10.0 - 14.0	2.0 - 3.0	---	---	
316L WFM	17.0 - 20.0	11.0 - 14.0	2.0 - 3.0	---	---	E/ER316L & LT
CD4MCu BM	24.5 - 26.5	4.75 - 6.0	1.75 - 2.25	2.75 - 3.25	---	
316L/CD4MCu Welds	16.0 - 26.5	4.75 - 16.0	1.75 - 3.0	---	---	Note 1
AL6XN BM	20.0 - 22.0	23.5 - 25.5	6.0 - 7.0	0.75 max	---	
625 WFM	20.0 - 23.0	58.0 min	8.0 - 10.0	0.50 max	---	E/ERNiCrMo-3
AL6XN Welds	20.0 - 23.0	25.5 min	7.0 - 10.0	0.75 max	---	Note 2
C-22 BM	20.0 - 22.5	Remainder	12.5 - 14.5	---	2.5 - 3.5	
CD4MCu BM	24.5 - 26.5	4.75 - 6.0	1.75 - 2.25	2.75 - 3.25	---	
C-22 WFM	20.0 - 22.5	Remainder	12.5 - 14.5	0.5 max	2.5 - 3.5	E/ERNiCrMo-10
C-22/CD4MCu Welds	16.0 - 22.5	25.0 min	10.5 - 14.5	---	2.5 - 4.5	
C-22 BM	20.0 - 22.5	Remainder	12.5 - 14.5	---	2.5 - 3.5	
C-22 WFM	20.0 - 22.5	Remainder	12.5 - 14.5	0.5 max	2.5 - 3.5	E/ERNiCrMo-10
C-22 Welds	20.0 - 22.5	52.0 min	12.5 - 14.5	---	2.5 - 3.5	Note 1
Alloy 625 BM	20.0 – 23.0	58.0 min	8.0 – 10.0	---	---	
to 304L	18.0 - 20.0	8.0 - 12.0	---	---	---	
to 316L	16.0 - 18.0	10.0 - 14.0	2.0 - 3.0	---	---	
625 WFM	20.0 - 23.0	55.0 min	8.0 - 10.0	0.50 max	---	E/ERNiCrMo-3
Alloy 625 to 304L/316L Welds	19.0 – 23.0	50.0 min	8.0 min	0.50 max	---	
AL6XN (N08367) BM	20.0 - 22.0	23.5 - 25.5	6.0 - 7.0	0.75 max	---	
to 304L	18.0 - 20.0	8.0 - 12.0	---	---	---	
to 316L	16.0 - 18.0	10.0 - 14.0	2.0 - 3.0	---	---	
625 WFM	20.0 - 23.0	55.0 min	8.0 - 10.0	0.50 max	---	E/ERNiCrMo-3
N08367 to 304L/316L Welds	19.0 – 23.0	25.0 min	4.0 – 10.0	---	---	

BM = Base metal; WFM = Weld filler metal

Notes:

1. Acceptance is based on the combined base metal and WFM spec requirements.
2. Acceptance is based on WFM spec and the expected amount of dilution for molybdenum.

EXHIBIT 2 | STRUCTURAL DESIGN LOADS FOR SEISMIC CATEGORY IV EQUIPMENT AND TANKS

Specification 24590-WTP-3PS-FB01-T0001, REVISION 6 was used as applicable to create the following exhibit.

Note: All References on this exhibit are inclusive to this exhibit only.

Specification	Requirement
1.1 General	This exhibit provides structural design loads for Seismic Category IV (SC-IV) equipment and tanks on the River Protection Project-Waste Treatment Plant (RPP-WTP) located at the Department of Energy (DOE) Hanford Site in Richland, Washington. The seismic categories are derived from the performance categories defined in DOE-STD-1020-94 (Ref. 2.7). The loads include dead, live, wind, fluid, earthquake, snow, ashfall, lateral earth pressure, operating pipe reaction, and thermal loads. Equipment and Tanks required to perform a nuclear safety function during and following a seismic event shall be qualified by analysis or by testing. This exhibit is to be used in combination with the Main Equipment Specification, which may include supplemental codes applicable to the specific Structure, System, or Component (SSC). Appendix B provides guidance for documenting seismic qualification. In case of conflicts between this exhibit and other technical requirements in the Main Equipment Specification, the Seller shall identify such conflicts to the Buyer in writing and obtain resolutions documented in writing. These conflicts may also include inconsistency of load definitions, conditions and combinations as specified by the referenced codes and standards.
1.2 Definitions	EQUIPMENT: Mechanical, electrical, or control system component or element that is part of a mechanical and/or electrical system. SC-IV EQUIPMENT/TANK: Equipment/Tank required to be designed for the SC-IV loads and load combinations provided in this exhibit. This may include equipment/tank: A Safety Class (SC) or Safety Significant equipment/tank that has no natural phenomena hazards (NPH) safety function. Assigned SC-IV for seismic design per the facility-specific Preliminary Documented Safety Analysis (PDSA) document or Documented Safety Analysis document, Non-safety SSC with no potential for seismic interaction with a safety SSC Non-safety SSC with a low interaction potential with a safety SC-III SSC
2 Applicable Documents	
2.1 American Concrete Institute (ACI)	ACI 318-99 Building Code Requirements for Structural Concrete and Commentary.

Specification	**Requirement**
2.2 American Concrete Institute (ACI)	ACI 349-01 Code Requirements for Nuclear Safety related Concrete Structures and Commentary.
2.3 American Institute of Steel Construction (AISC)	AISC M016-89 Manual of Steel Construction — Allowable Stress Design, Ninth Edition.
2.4 American Society of Civil Engineers (ASCE)	Manuals and reports on Engineering Practice; No. 78, Structural Fire Protection, ASCE 1992.
2.5 American Society of Civil Engineers (ASCE)	Minimum Design Loads for Buildings and Other Structures, ASCE 7-98.
2.6 Deleted	Deleted
2.7 Deleted	Deleted
2.8 International Conference of Building Officials (ICBO)	Acceptance Criteria for Seismic Qualification Testing of Nonstructural Components ICBO AC 156, January 2000.
2.9 International Conference of Building Officials (ICBO)	Uniform Building code, UBC-97
2.10 Deleted	Deleted
2.12 Deleted	Deleted
2.13 Deleted	Deleted
2.15 American Society of Mechanical Engineers (ASME)	ASME Boiler and Pressure Vessel Code, Section Il, Part D, Subpart 1 (Any edition of the code between 1995 and current edition)
4 Design Loads	
4.1 Wind Loads	Wind loads shall be calculated per the provisions of ASCE 7-98 (Ref. 2.5), using the following parameters: Basic wind speed (3-second gust) at a height of 33 feet above ground: 85 mph for SC-IV Exposure Category: C Importance Factor: 1.0
4.2 Snow and Ashfall Loads	
4.2.1	Snow loads shall be calculated per the provisions of the ASCE 7-98 (Ref. 2.5), using 15 psf ground snow load.
4.2.2	Ashfall loads shall be as follows. For SC-IV equipment 3 psf
4.3 Earthquake Loads	
4.3.1	Earthquake loads on equipment and tanks supported by structures shall be calculated per the provisions of UBC-97 (Ref 2.9), Section 1632, using the following parameters: I_p = 1.0 For SC-IV equipment tanks C_a = 0.24 a_p = 1.0 for rigidly mounted rigid* equipment = 2.5 for flexible equipment* * and flexibly mounted rigid equipment = 1.0 for tanks * Rigid equipment are defined as those with a fundamental period of less than or equal to 0.06 seconds (≥17Hz). ** Flexible equipment are defined as those with a fundamental period of greater than 0.06 seconds (<17Hz). R_p = 3.0 To be used when equipment is attached directly to structural steel = 1.5*** To be used by suppliers unless otherwise specified on the

Specification	**Requirement**
	Main Equipment Specification *** Based on actual conditions and location, Buyer's Civil, Structural, Architectural (CSA) personnel may approve an R_p of 3.0 in calculations.
4.3.2	Earthquake loads for self-supporting tanks (i.e. supported on their own foundation) shall be calculated per the provisions of UBC-97 (Ref. 2.9), Section 1634, using the following parameters: I = 1.0 for SC-IV tanks C_a = 0.24 C_v = 0.32
4.3.4	Deleted
4.3.5	The Seller shall submit the proposed test program (test plan) to the Buyer for review prior to testing. Test plan and sequence, as referenced by IEEE Std 344 (Ref. 2.10) and IEEE Std 382 (Ref. 2.12), shall be per Sections 6.3.1.1 and 6.3.2 of IEEE Std 323 (Ref. 2.13), respectively. For qualification (line or duct-mounted application), see Appendix D.
4.5 Live Loads on Equipment-Supported and Tank-Supported Platforms and Walkways	Platforms and Walkways 100 psf Stairs treads 100 psf or 300 lbs. concentrated loads applied over an area of four (4) square inches, whichever load produces greater effect on equipment. Handrails for stairs and platforms per Table 16B of UBC-97 (Ref. 2.9)
4.6 Thermal Loads	
4.6.1 Base Temperature	The base temperature for thermal analyses shall be 70ºF. This temperature is based on recommendations from ACI 349 (Ref. 2.2).
4.6.2 Outdoor Ambient Temperatures	Unless specified otherwise in the Main Equipment Specification or datasheets, ambient air temperatures shall be as follows: For SC-IV equipment:115 ºF maximum, -25 ºF minimum
4.6.3 Operating Temperatures (Normal and Abnormal), T_o	Operating (normal and abnormal) temperatures are provided in the Equipment Datasheets. Abnormal Temperatures are due to an anticipated eight-hour loss of cooling event, which is postulated to occur once per year, and is not the result of an accident or NPH. Abnormal temperature thermal loads shall not be considered concurrent with earthquake (E) loads. For load combinations which include earthquake (E), T_o shall be normal operating temperature thermal loads only. For load combinations without seismic (E), T_o shall be greater of normal or abnormal operating temperature thermal loads.
4.6.4 Deleted	Deleted
4.6.5 Temperature Limitations on Structural Elements	SC-IV designed steel and stainless steel structures shall use reduced yield stress (Fy) and elastic modulus (E) in accordance with the ASCE Engineering Practice 78 (Ref. 2.4), see example provided in Appendix A.
5 Loads and Load Combinations	The following loads and load combinations are applicable to SC-IV equipment and tanks.

Specification	**Requirement**
5.1 Structural Steel Design Load Combinations	For the design of equipment and tanks, the following loads shall be combined with other applicable loads, per the provisions of the Equipment/Tank Technical documents included with the Purchase Order (P.O.). A Ashfall Loads D Dead Loads E Earthquake (Seismic) Loads (Due to DBE) L Live Loads S_N Snow Loads W Wind Loads T_o Thermal Loads during Normal & Abnormal Operating Conditions T_a Thermal Loads due to Accident (DBE) Temperature P_o Maximum or minimum differential pressure load generated by Normal or Abnormal HVAC operations P_a Maximum or minimum differential pressure load generated by DBE $HPAV_{def}$ Pipe reactions due to HPAV high-speed deflagration loading $HPAV_{det}$ Pipe reactions due to HPAV detonation S Allowable Stress per Allowable Stress Design Method For the design of equipment/tank supports, the following service-level load combinations shall apply. Note: the 1/3 allowable stress increase discussed in UBC-97 (Ref. 2.9), Section 1612.3.2, has been incorporated into the following combinations through the use of the 0.75 factor. No further stress increase is allowed. The following load combinations are based on Section 1612.3.2 of UBC-97 and using the Allowable Stress Design Values of AISC M016, ASD Ninth Edition (Ref. 2.3). $S = D+L+A+P_o+T_o$ $S = D+L+S_N+P_o+T_o$ $S = 0.75(D+L+W+P_o+T_o)$ $S = 0.75(D+L+S_N/2+W+P_o+T_o)$ $S = 0.75(D+L+S_N+W/2+P_o+T_o)$ $S = 0.75(D+L+P_o+T_o+E/1.4)$ $S = 0.75(0.9D+P_o+T_o \pm E/1.4)$ $S = 0.75(D+L+P_a+T_a)$ $S = 0.75(D+L+T_a+E/1.4)$ Where T_a is Due to HELB
5.1.1	Deleted
5.1.2 Other Loads	Where other loads are to be considered in design, each applicable load shall be added to the combinations specified above per requirements of Section 1612.3.3 of UBC-97 (ref. 2.9).
5.2 Reinforced Concrete Design Load Combinations (Anchorage design)	For equipment and tanks anchorage design, the following loads shall be combined with other applicable loads, per the provisions of the Main Equipment Specification. A Ashfall Loads D Dead Loads E Earthquake Loads F Fluid Loads

Specification	Requirement
	H Lateral Earth Pressure Load L Live Loads R_o Operating Pipe Reaction Load S_N Snow Loads T_o Thermal Loads during Normal & Abnormal Operating Conditions W Wind Loads T_a Thermal Loads due to Accident (DBE) Temperature P_o Maximum or minimum differential pressure load generated by Normal or Abnormal HVAC operations P_a Maximum or minimum differential pressure load generated by DBE U Required Strength per Strength Design Method The following load combinations are based on section 9.2 of ACI 318 (Ref. 2. 1). $U = 1.4D + 1.7L + 1.7A$ $U = 1.4D + 1.7L + 1.7S_N$ $U = 0.75(1.4D + 1.7L + 1.7W)$ $U = 0.75 (1.4D + 1.7L + 1.7S_N + 1.7W)$ $U = 0.9D \pm 1.3W$ $U - 1.4D + 1.7L+ 1.7A + 1.7H$ $U = 1.4D + 1.7L + 1.7S_N+ 1.7H$ $U = 0.9D + 1.7H$ $U = 1.4D + 1.7L+ 1.7A + 1.4F$ $U = 1.4D + 1.7L + 1.7S_N + 1.4F$ $U = 0.9D + 1.4F$ $U = 1.4 (D + T_o)$ In addition, the following load combinations based on UBC Section 1612.22 shall apply. $U= 1.1(0.9D\pm E)$ $U = 0.75(1.4D+1.7L+1.7S_N+1.4T_a+1.4R_o)$ Where Ta is Accident (DBE) Temperature [see 4.6.4(b)] $U = D+L+S_N+F+H+T_a+R_o+E$ where T_a is due to (HELB) [see 4.6.4(a)] $U = 0.75(1.4D+1.7L+1.4T_o+1.4P_o+1.4R_o)$ $U = 0.75(1.4D+1.7L+1.7SN+1.4T_o+1.4P_o+1.4R_o)$ $U = 1.4(D+T_o+P_o)$ $U = 1. 1 (1.2D+L+0.2SN+1.3F+1.6H+ 1.2T_o+1.2P_o+1.2R_o+E)$ where T_o and P_o are the normal operating values only $U = 0.75(1.4D + 1.7L + 1.7SN+ 1.4T_a+ 1.4P_a + 1.4R_o)$ $U = D + L + SN + F + H + T_a + P_a + R_o$
6 Equipment and Tank Anchorage	The Supplier shall furnish the Buyer with the following information: • Location of anchorage in relation to equipment. • Design loads on the anchorage shall be reported by individual load and load combination. • Coordinate system and sign conventions. The selected anchor bolt material for the WTP project is ASTM F1554 (Ref. 2.6). Use of other anchor bolt materials, require the approval of the Buyer.

EXHIBIT 3 | COLD BENDING OF PIPE

Specification 24590-WTP-3PS-PS02-T0002, REVISION 2 and its associated Specification Change Notice (SCN) 24590-WTP-3PN-PS02-00111 were used as applicable to create the following exhibit.

Note: All References on this exhibit are inclusive to this exhibit only.

Specification	Requirement
1 Scope	This exhibit establishes the requirements for Shop and Field cold bending of stainless steel pipes.
2 Applicable Documents	Work shall be done in accordance with the referenced codes, standards, and documents listed below, which are an integral part of this exhibit. The following codes and standards shall apply: ASME - 1996 Process Piping PFI ES-3 Fabricating Tolerances PFI ES-24 Pipe Bending Methods, Tolerances, Process and Material Requirements
3 Materials	Cold bending is permitted for seamless ASTM A312 Type 304L and Type 316L stainless steel pipe. Pipe may be cold bent by rotary draw bending or ram and roll bending. Material allowances will vary with the cold bending method, material, pipe size and bend radius and are dependent upon the equipment used. The maximum size pipe to be bent shall be 4 NPS Schedule 80S for stainless steel. Bending is restricted to 3-D or larger radius bends. The wall thickness after bending shall not be less than 70% of the specified pipe class schedule nominal wall thickness for Buyer designed piping. Thinning that exceeds that allowed in the pipe class shall be brought to Buyer's attention via a Supplier Deviation Disposition Request. For Supplier designed piping, the wall thickness after bending shall not be less than the minimum required thickness calculated in accordance ASME B31.3-1996, Paragraph 304.2.1.
4 Qualification Testing	
4.1	Qualification testing shall be performed in accordance with ASME B31.3 and this exhibit. Sample bends shall be made using Schedule 40 pipe with the minimum bend radius used in production, or smaller.
5 Bending Procedure	The Shop and Field Fabricator shall submit a detailed procedure for review and acceptance prior to use. Procedure shall include the bending method to be used, equipment descriptions, lubricants, inspections, and documentation.
6 Acceptance Criteria	
6.1	Pipe bends shall be free of cracks, seams, gouges, and notches and be free of any indication of buckling. Minor defects shall be removed by grinding or buffing provided the thinning allowance permitted by the Pipe Class Sheet is maintained. Bends with cracks or other major defects shall be rejected.
6.2	Pipe bend dimensional tolerances shall be in accordance with ASME B31.3, the Pipe Class Sheets, and as follows:
6.2.1	Degree of bend ±1.0 degree
6.2.2	Plane of bend ±1.0 degree
6.2.3	Linear PFI ES-3
6.2.4	Minimum Radius and tangent PFI ES-24
6.2.5	Ovality

Specification	**Requirement**
6.2.5.1	Ovality shall not exceed 8 % of the nominal outside diameter [Ovality % = (D_{max} - D_{min}) x 100 / D_{nom}]
6.2.5.2	Ovality shall be checked at the bend start, finish, 1/4, mid, and 3/4 points on the first five bends with each procedure for each diameter and schedule or wall thickness on each shift.
6.2.5.3	If Ovality test results are acceptable, the ovality test may be reduced to a single test at the mid point of 10 % of the bends for the remainder of the shift, as long as the ovality remains acceptable.
6.2.5.4	If any bend is found with Out of Tolerance Ovality, all previous bends from that procedure shall be verified by the full ovality check (start, finish, 1/4, mid, and 3/4).
6.2.5.5	Full ovality testing may again be reduced after five consecutive acceptable full examinations.
6.2.6 Wall Thickness	
6.2.6.1	Wall thickness measurements shall be made along the extrados at the start, finish, 1/4, mid, and 3/4 points on the first five bends with each procedure on each shift. The measured wall thickness shall equal or exceed the minimum specified for the pipe.
6.2.6.2	If wall thickness measurements are acceptable, all subsequent bends made with the same procedure on the same shift of the same diameter and schedule or wall thickness of pipe shall have wall thickness measurements taken at the location of greatest thinning only.
6.2.6.3	If any bend is found with Out of Tolerance Thickness, all previous bends from that procedure shall be verified by the full thickness check (start, finish, 1/4, mid, and 3/4).
6.2.6.4	Full wall thickness testing may again be reduced after five consecutive acceptable full examinations.
9 Materials for Use In Contact with Stainless Steel	
9.1	The thinners, solvents, and cleaning materials that are to be used in direct contact with austenitic stainless steels shall meet the following requirements: • The leachable halogen content shall be less than 200 ppm. • The leachable sulfur content shall not exceed 400 ppm. • Low melting points metals (lead, bismuth, zinc, mercury, antimony, cadmium, and tin) shall not exceed 1 percent. Of this, mercury should not exceed 50 ppm. These low melting point metals shall not be intentionally added to materials in direct contact with austenitic stainless steels.
9.2	Bending lubricants shall be thoroughly removed using an approved cleaning procedure after bending is complete.
9.3	A certificate of analysis for bending lubricants to be used shall be included with the bending procedure.
10 Documentation and Submittals (Applicable to Shop Fabrication Only)	

Specification	Requirement
10.2	The Supplier shall submit dimensional tolerance acceptance verification in accordance with this exhibit and the Purchasing documents. Verification reporting format may be either by tabular listing of reports or by tabular listing and sketch, and specified by Supplier's accepted procedure.

EXHIBIT 4 | GENERAL WELDING AND NDE REQUIREMENTS FOR SUPPLIER FABRICATED PIPING

Specification 24590-WTP-3PS-NWP0-T0001, REVISION 2 and its associated Specification Change Notices (SCNs) 24590-WTP-3PN-NWP0-00003 and 24590-WTP-3PN-NWP0-00006 were used as applicable to create the following exhibit.

Note: All References on this exhibit are inclusive to this exhibit only.

Specification	Requirement
1 Scope	This exhibit establishes the welding, nondestructive examination (NDE), and heat treating requirements for Supplier-fabricated piping and is applicable to purchase orders for equipment as well as to piping fabrication purchase orders (i.e., the fabrication of pipe spools).
2 Applicable Documents	
2.2 Codes and Standards	For codes and standards listed below, the specific revision or effective date identified, as well as the specific revision or effective date of codes and standards that they incorporate by reference (daughter codes and standards), shall be followed. If a date or revision is not listed, the latest issue, including the addenda, at the time of award shall apply unless otherwise specified in the purchase order. The use of any other edition, revision, or issue requires Buyer's approval. Conflicts shall be referred to the Buyer for resolution.
2.2.1	American Society of Mechanical Engineers (ASME) • B31.3 1996 Process Piping • Section II 1995 Boiler & Pressure Vessel Code, Section Il, Materials • Section V 1995 Boiler and Pressure Vessel Code, Section V, Nondestructive Examination • Section IX 1995 Boiler and Pressure Vessel Code, Section IX, Welding and Brazing Qualifications
2.3	American Society for Nondestructive Testing (ASNT) • SNT-TC-1A * Recommended Practice No. SNT-TC-1A Personnel Qualification and Certification in Nondestructive Testing *Personnel who perform NDE (including radiographic testing, magnetic particle testing, ultrasonic testing, liquid penetrant testing, electromagnetic testing, neutron radiographic testing, leak testing, acoustic emission testing, and visual testing) to specified acceptance criteria shall be qualified to a "Written Practice" (or procedure) meeting the requirements of the American Society for Nondestructive Testing Recommended Practice No. SNT-TC-1A. This "Written Practice" must meet all the requirements from any one given edition of SNT-TC-1A

Specification	Requirement
	(and its applicable supplements) as follows: 1988, 1992, 1996, 2001, and 2006. Only the SNT-TC-1A edition selected and its applicable supplements shall be used in the "Written Practice" and that edition shall be met in its entirety (except as shown below). Combining SNT-TC-1A contents from one edition year with another edition year is prohibited, except as follows: If the 1988, 1992, or 1996 editions are utilized, the additional requirements for periodic technical performance evaluation and documentation found in paragraphs 10.2 and 12.1 of the 2006 Edition shall also be met. The re-certification interval for Level Ill nondestructive examination personnel shall not exceed five years.
2.4 Reference Documents	
2.4.3	Exhibit 5 of 24590-BOF-3PS-MVSC-T0003, *Shop Fabrication of Piping*
3 Definitions	
3.4	Supplier-Fabricated: performed at the Supplier's facility.
4 Submittal of Procedures	
4.1	Before any fabrication is to commence, procedures for welding, control and storage of filler material, hardness testing, and postweld heat treatment (PWHT) shall be submitted to the Buyer for review against Code requirements and for suitability for each intended application. Additionally, the Seller shall submit a detailed Welding Procedure Application List identifying Welding Procedures being used for each individual pipe material. This document will also identify the extent of NDE per individual pipe material and the extent of Positive Material Identification (PMI). Exhibit 5 of 24590-BOF-3PS-MVSC-T0003 covers the extent of NDE and PMI. The attached form (Figure 1) is a typical example of a Welding Procedure Application List. The submittal of procedures for review applies to any sub-vendor used by the Supplier. A review status of "Work May Proceed" shall be obtained prior to use. Early submittal is necessary to allow time for possible revision.
4.3	Welding procedures shall be qualified in accordance with the requirements of the applicable Code and any additional requirements defined on the Welding Procedure Application List. The procedure qualification record (PQR) shall be submitted with the welding procedure specification (WPS). Personnel qualifications will be verified at the Supplier's shop.
4.4	It is not the Buyer's intent to require revisions to the Supplier's standard WPSs to meet these requirements, yet the limitations shall be clearly acknowledged and the instructions employed by the welders on the shop floor. To accommodate this, Supplier's may revise WPSs or issue job-only amendments or addenda to standard WPSs. Any amendment or addenda shall become part

Specification	Requirement
	of the WPS for the purchase order and shall be issued to the welders employed in the work.
4.5	For repair of a weld, either the original WPS or one originally submitted as a designated repair WPS shall be used.
4.6	Repair plans that use welding for repair of welds or base metals shall be submitted to the Buyer for review and permission to proceed prior to the start of the repairs. A repair plan shall include the following: a) The method of evaluating the type and the extent of the defect. b) Methods used for removing the defect, and testing conducted to ensure that the defect has been removed. c) Welding procedure employed and NDE methods used to inspect the completed repair. Any incident of breaching the pressure boundary will require the submittal of a repair plan, specific to the incident, to the Buyer for review and permission to proceed prior to the start of the repairs.
4.7	Postweld heat treatment procedures describing cleaning requirements, heating and cooling rates, thermocouple locations, type of heating equipment, etc. shall be submitted to the Buyer for review and permission to proceed if required per ASME/ANSI B31.3 Code.
5 Welding Process Limitations	
5.1 Root Pass of Single Side Butt Welds Without Backing	Subject to the limitations listed, <u>only</u> the following welding processes shall be used:
5.1.1	Shielded Metal Arc Welding (SMAW) a) EXX10 or EXX11 electrodes on P-No. 1, S-No. 1, S-No. 3, P-No. 3, SP-1, SP-2, and SP-3 (see B31.3) steels. b) Maximum electrode diameter of 3/32 inch for nominal pipe size (NPS) less than 2-1/2 inch. c) EXX10, EXX11, EXX12, and EXX13 limited to impact test temperature not lower than -20°F.
5.1.2	Gas Tungsten Arc Welding (GTAW) a) Backpurge two layers minimum for alloy content higher than 2-1/4 wt % Cr and 1 wt % Mo. b) GTAW is required for all lubrication, hydraulic and instrument piping (lines).

Specification	Requirement
	c) Filler material addition is required, except for thin wall expansion bellows and titanium.
5.1.3	Gas Metal Arc Welding (GMAW) a) Globular transfer with mixed gas or CO_2. b) Pulsed spray transfer. c) Short circuiting transfer using solid wire and shielding gas neutral to the base metal. d) For nominal pipe sizes (NPS) less than 6 inch, all shop welding should be performed in the 1G rotated position whenever possible.
5.2 Other Than Open Butt Root Passes (Fill and cap passes, sockets, fillets)	Subject to the limitations listed, <u>only</u> the following welding processes shall be used:
5.2.1	Shielded Metal Arc Welding (SMAW) a) Maximum electrode diameter 3/32 inch on socket welds. b) Filler metal "F" numbers (see ASME IX-QW-432). F1 & F2 - not permitted on pressure retaining welds. F3 - not permitted for welding on castings. - acceptable for P-No. 1 with 0.30% maximum carbon or 70 ksi maximum ultimate tensile strength. - not permitted for use when base material requires impact testing below -20°F (minus 20°F). F4 - Maximum electrode diameter 3/32 inch for NPS less than 2-1/2 inch.
5.2.2	Gas Tungsten Arc Welding (GTAW) a) All groove welds in 1-1/2 inch NPS and smaller shall be welded with GTAW.
5.2.3	Gas Metal Arc Welding (GMAW) a) GMAW-P - Pulsed spray transfer — No limitations. b) GMAW-S - Short circuiting or globular transfer - maximum base metal thickness 3/8 inch. c) Continuous spray transfer - No limitations. d) For nominal pipe sizes (NPS) less than 6 inch, all welding shall be performed in the 1G rotated position.

Specification	Requirement
5.2.4	Flux Cored Wire Arc Welding (FCAW) a) Arc shielding gas required for pressure retaining welds.
5.2.5	Submerged Arc Welding (SAW) a) Six inch NPS minimum. b) Neutral flux (no active or alloy). c) Run on/run off tabs where possible.
6 Welding Filler Materials	
6.1	Except where specifically accepted otherwise, welding materials shall be selected so that the deposited weld metal is similar in chemical composition and not significantly harder or stronger than the base material (e.g., Stainless steel L-grade base metal shall be welded with L-grade filler metal). Test temperature shall be at or below the design metal temperature.
6.2	E6013 electrodes may be used for joints in cement lined pipe with prior permission from Buyer.
6.3	Austenitic stainless steel (A-No. 8) welding materials for pressure boundary and load bearing welds shall contain a minimum delta ferrite content of five percent. Compliance with the ferrite requirements may be based upon the certified chemical analysis and the WRC Delta Ferrite Diagram (Figure 2) or a ferrite gage complying with AWS A4.2. Alternately, for SMAW and solid wire filler material manufactured in the USA, a Certified Material Test Report (CMTR) of minimum ferrite content is acceptable.
6.4	For dissimilar welds, such as carbon or low alloy steels to austenitic stainless steels, the Welding Procedure Application List shall specify the correct filler material type. When postweld heat treatment of these joints is required, the carbon or low alloy steel member shall be "buttered" with the selected stainless steel or nickel alloy (when the design temperature exceeds 800 °F) filler material, and postweld heat treated. Then the joint shall be welded to the austenitic stainless steel member without further PWHT.
6.5	For all filler metal, a Material Test Report (MTR) with actual test results is required for each heat. Alternatively, a Certified Material Test Report (CMTR) in accordance with ASME Boiler and Pressure Vessel Section II, Part C, is acceptable.
6.6	The storage, baking and drying of all welding consumables (i.e., covered electrodes, flux cored electrodes and fluxes) shall be as recommended by the manufacturer. Segregation of carbon steel, low alloys, and alloy consumables is required during storage, baking, holding, and handling (including portable ovens).
7 General Welding Requirements	

Specification	Requirement
7.1	All welding shall be protected from wind, rain and other harmful weather conditions which may affect weld quality.
7.2	All surfaces to be welded shall be dry and substantially free of mill scale, oil, grease, dirt, paint, galvanizing, and other contaminants. The welding to austenitic stainless steels or nickel alloys to attachments which have been coated with galvanizing or zinc type paint, even if the coating has been removed, is prohibited.
7.3	Weld bevel preparations for P-No. 4 and higher alloys shall be machined or ground back to bright metal if they have been flame, arc, plasma, or laser cut.
7.4	Permanently installed backing rings or straps shall not be used. Temporary backing requires Buyer approval prior to use.
7.5	The individual weld layer thickness for all processes shall not exceed 3/8 inch for materials less than 1-1/4 inch thick, or 1/2 inch for greater material thicknesses.
7.6	All weld joints for pressure retaining applications shall have a minimum of two passes. This includes socket welds.
7.7	Where joints are welded from both sides, the first pass shall be backchipped, ground or arc-gouged to sound metal before welding the second side. This requirement shall be stated on the WPS. (Except on welds that are not full-thickness.)
7.8	Peening shall not be used. The use of pneumatic tools or steel shot for slag removal is not considered peening.
7.9	Welding sequences in which a layer is not completed before the next layer is started (block welding) shall require approval by the Buyer.
7.10	Except for root passes, vertical welding shall be vertical up unless approved otherwise by Buyer for each specific application.
7.11	Gas mixture combinations for weld shielding and purging shall be documented and approved as part of the welding procedure specification (WPS). Any change in gas mixture requires revision of the WPS and may require requalification. Welding consumables shall be qualified using the gas mixture of the WPS.
7.12	Welding of stainless steel and nickel based materials shall be physically separated from carbon steel to ensure contamination by tools, grinding dust, etc., does not occur.
8 Preheat And Interpass Temperatures	
8.1	Preheat temperature shall be in accordance with the applicable codes and Welding Procedure Application List, except that code recommended minimum preheat temperatures shall be mandatory. Preheat requirements shall apply to all welding, including tack welding and welding of temporary attachments. Preheat requirements also apply to all thermal gouging and cutting operations except for P-No. 1 steels. For GTAW root pass welding only, reduced preheat levels as permitted by the

Specification	Requirement
	applicable code may be used. Preheat shall be maintained a minimum of 3 inches on either side of the joint.
8.2	For welds requiring preheating, the weld joint shall be completed with no intermediate cooling except that cooling under an insulating blanket is permitted provided at least applicable code required minimum joint depth has been filled, and provided that applicable documents do not specify more stringent requirements.
8.3	The interpass temperature for austentitic stainless steel and nickel base alloys shall not exceed 350 °F, except that for hard facing of low carbon austentitic stainless steels, the interpass temperature shall not exceed 800 °F.
8.4	Preheat shall be determined by temperature indicating crayons, contact pyrometers or other equally suitable means. Temperature indicating crayons used on austenitic stainless steels and nickel base alloys shall not cause corrosive or other harmful effects. It is the Seller's responsibility to determine suitable brands that may be used. This information shall be made available to the Buyer's representative on request.
8.5	If oxy-fuel torches are used for preheating, the torch tip shall be appropriate for the work (i.e., a "rosebud," not a cutting or welding tip).
9 Postweld Heat Treatment (PWHT)	
9.1	Postweld heat treatment requirements for piping shall be in accordance with the applicable code and project specifications. The heat treatment temperature range and time at temperature shall be as specified in the Welding Procedure Application List.
9.2	Direct impingement by furnace burner flames is not permitted.
9.3	Only resistance, induction, furnace or quartz lamp heating methods are permitted. Exothermic heat treatment is prohibited.
9.4	All PWHT cycles shall be recorded on print out charts. Thermocouples shall be independently recorded. When PWHT is performed outside of a controlled furnace environment, each weld shall have at least one thermocouple attached for temperature monitoring. The heat treat chart shall be submitted to the Buyer for review.
10 Non-destructive Examination	
10.1	Welding Procedure Application List shall identify the extent of NDE per individual pipe class and the extent of PMI to address the NDE and PMI requirements of Exhibit 5 of 24590-BOF-3PS-MVSC-T0003.
11 Workmanship And Inspection	
11.1	Each layer of welding shall be smooth and free of slag inclusions, porosity, excessive undercut, cracks and lack of fusion prior to beginning the next layer. In addition, the final weld layer shall be sufficiently free of coarse ripples, non-

Specification	Requirement
	uniform bead patterns, high crown and deep ridges to permit the performance of any required inspection. All arc strikes, starts, and stops shall be confined to the welding groove or shall be removed by grinding. Welds containing cracks shall be locally repaired.
11.2	Marking materials and liquid penetrant materials used on austenitic stainless steels and nickel-base alloys shall not cause corrosive or other harmful effects. See 8.4 of this exhibit.
11.3	Socket welds shall have a gap of 1/16 inch minimum to 1/8 inch maximum between the bottom of the socket and the end of the pipe prior to welding.
11.4	Misalignment (high-low) in butt joints shall not exceed applicable code requirements.
11.5	Deposited weld metal shall meet the hardness requirements identified on the Welding Procedure Application List. Testing shall be done after any postweld heat treatment. Hardness readings shall be taken with a portable tester in accordance with ASTM or approved equivalent Standards. Hardness measurements taken as part of a weld procedure qualification shall be taken on weld transverse cross sections. Hardness measurements shall be taken as near as practicable to both the inside and outside diameter surfaces. If a hardness test fails to meet the acceptance criteria and either of two subsequent adjacent tests exceeds the specified hardness, the weld shall either be replaced or reheat treated and retested.
11.7	Each weld shall be marked with the welder's unique symbol or number identification using low stress stamps or "vibro-etch". Alternate method(s) shall be submitted for Buyer review and approval.
11.8	All examination and inspection reports, including radiographic film, shall be made available to Buyer's representative.
11.9	All nondestructive examinations, including visual examination, shall be performed by personnel certified in accordance with ASNT Recommended Practice SNT-TC-1A. Alternatively, personnel performing visual examinations may be qualified in accordance with AWS QC-1 as either a CWI (Certified Welding Inspector) or a SCWI (Senior Certified Welding Inspector). The Supplier NDE certifications and procedures shall be submitted to the Buyer for review and permission to proceed.
13 Documentation and Submittals	
13.2 Inspection and Test Reports	
13.2.1	Nondestructive examination test reports shall be provided at the time of shipment.
13.3 Procedures and Qualifications	
13.3.1	Welding/weld repair procedures and procedure qualification records shall be submitted prior to the start of work.

Specification	Requirement
13.3.2	Welder, heat treat, and NDE personnel certifications or qualifications shall be made available to the Buyer prior to the start of work.

Piping Classes

Design Code:		**Category:**
Pipe Class(es):	**Line Services:**	**Limits: - Temperature** °F, °C **/ Pressure** psig, bars

Piping Material Type:	**P Number:**	**Hardness Requirements:**

CVN Requirements:	**PMI Requirements:**	**Ferrite Requirements:**

Pipe Class or Weld Description	Pipe Size (nps)	Max W.T. ☐ Sched. ☐ inches ☐ mm	Joint Type	Heat Treatment °F, °C		Welding Procedure Specification(s)	NDE (%)				
				PRE	POST		RT	MT	PT	VT	Other

Notes:

Figure 1 -- Welding & NDE MATRIX (Welding Application List)

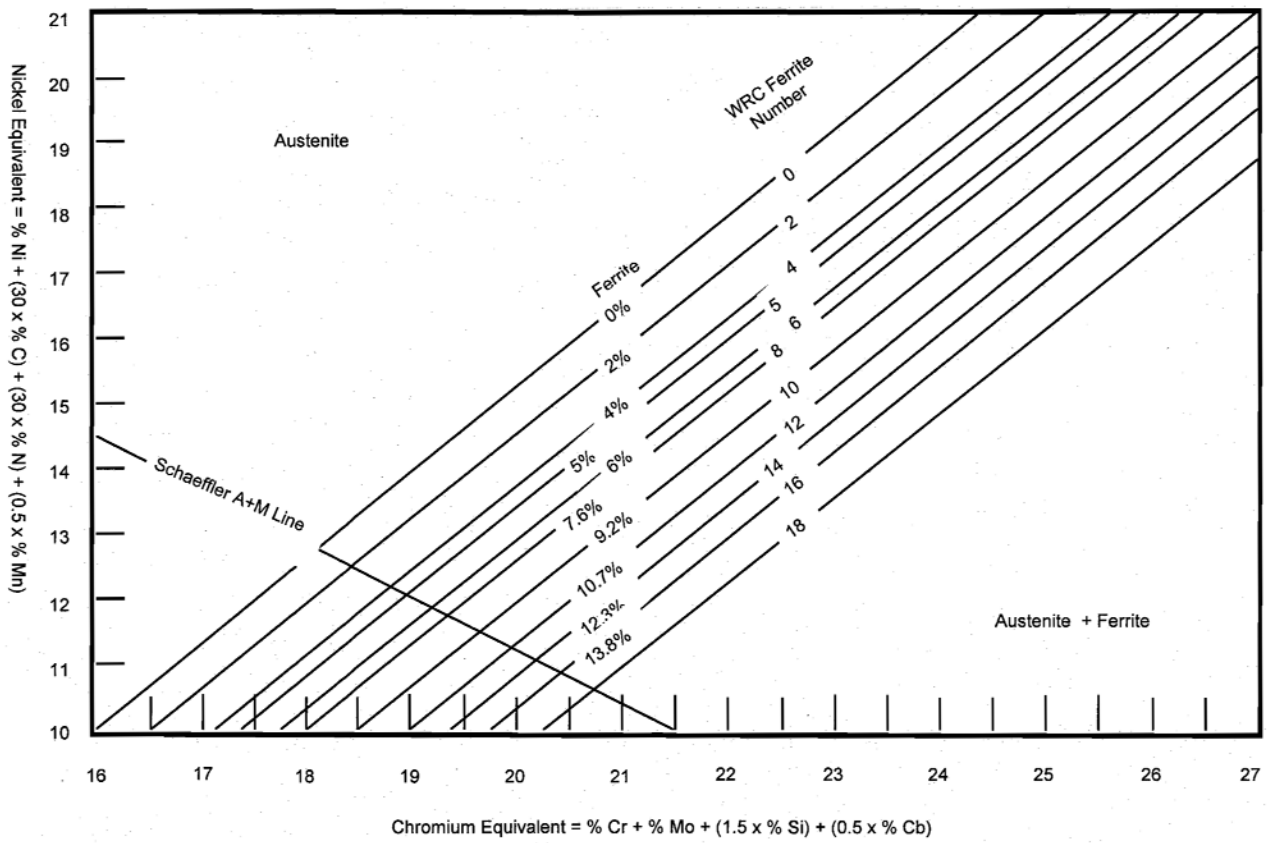

GENERAL NOTE:
The actual nitrogen content is preferred. If this is not available, the following applicable nitrogen value shall be used:

a) GMAW welds–0.08% (except self-shielding flux colored electrode GMAW welds–0.12%)
b) welds of other processes–0.06%

Figure 2 - WRC Delta Ferrite Diagram

EXHIBIT 5 | SHOP FABRICATION OF PIPING

Specification 24590-WTP-3PS-PS02-T0001, REVISION 10 and its associated Specification Change Notices (SCNs) 24590-WTP-3PN-PS02-00088, 24590-WTP-3PN-PS02-00090, 24590-WTP-3PN-PS02-00103, 24590-WTP-3PN-PS02-00106, and 24590-WTP-3PN-PS02-00108 were used as applicable to create the following exhibit.

Note: All References on this exhibit are inclusive to this exhibit only.

Specification	Requirement
1 General	
1.1 Scope	This exhibit defines the requirements and the work necessary for fabrication of piping subassemblies (pipe spools) in accordance with the requirements of ASME B31.3, *Process Piping,* other codes and standards, and documents as referenced in this exhibit. This exhibit applies to all quality levels as specified by the purchase order.
1.2 Work Included	
1.2.1.1	Furnish shop pipe spool sheets or extended spool sheets or detailed drawings when specifically required by the purchase order.
1.2.1.2	Furnish materials as required by the purchase order including pipe, fittings, flanges, and welding materials required for fabrication.
1.2.1.3	Fabricate pipe spools as follows:
1.2.1.3.1	Fabricate pipe spools including the installation of fittings, nozzles, thermowell connections, radiographic access holes/bosses, breather holes when required, and the preparation of field welding ends.
1.2.1.5	Supply and install integral structural attachments and supports as shown on piping isometric drawings, orthographic drawings, and/or detailed support drawings.
1.2.1.6	Perform post-weld heat treatment (PWHT) as required.
1.2.1.7	Perform all required testing and examinations.
1.2.1.8	Perform all required cleaning, lining, preservation, and shipping preparation.
1.2.1.9	Chemically clean and/or pickle piping where indicated on the design drawings and/or the piping material class.
1.2.1.10	Mark pipe spools with identification numbers in accordance with the identification numbers shown on the piping isometric drawings, orthographic drawings, or other instructions furnished by the Buyer.
1.2.1.11	Furnish all required documentation.
1.2.1.12	Package fabricated spools and associated materials, with packing lists, for delivery to the jobsite.
1.2.1.13	Apply color coding for material lay down purposes when required by the purchase order.
1.2.1.14	Perform Positive Material Identification (PMI) on completed fabrication in accordance with specification Exhibit 1, *Positive Material Identification (PMI) for Shop Fabrication,* and as required by Section 2.1.5. PMI is not to be performed on Buyer-

	furnished valves unless otherwise stated in the purchase order. Refer to Section 2.1.5.
1.2.1.15	Perform hydrostatic testing of fabricated spools when specifically required by contract documents using Buyer approved test procedures.
1.2.1.16	Perform pneumatic testing of fabricated spools when specifically required by contract documents using Buyer approved test procedures.
1.2.1.18	Installing fusion-bonded epoxies for linings is within a Supplier's scope of supply when called for in the purchase order.
1.3 Related Work Not Included	
1.3.1	The following items are not included in the Supplier's scope of work unless otherwise specified:
1.3.1.2	Furnishing and installing pipe supports (except as noted in Section 1.2.1.5).
1.3.1.3	Furnishing of cast or ductile iron pipe.
1.3.1.4	Furnishing thermowells.
1.3.1.5	Furnishing and installing flow nozzles and associated hardware.
1.3.1.6	Installing fabricated piping subassemblies in the field.
1.3.1.7	Furnishing and installing thermal insulation for piping.
1.3.1.8	Pressure testing of all piping, except as required by Sections 1.2.1.15 and 3.2.3 of this exhibit and the pressure test required by the applicable ASTM or ASME material specification.
1.3.1.9	Design of piping and preparation of piping drawings (except detailed spool drawings in accordance with Section 1.2.1.1).
1.3.1.10	Furnishing bolting materials, gaskets, insulating flange kits, or backing rings required for field assembly.
1.3.1.11	Pipe wall thickness and branch reinforcement calculations.
1.4 Codes and Standards	
1.4.1	ASME B31.3 1996, Process Piping, is the piping code for the WTP Project. When using ASTM material specifications for commercial material (CM) items, any version more recent than the ASTM version listed in Appendix E of ASME B31.3 1996 is acceptable. A SDDR is not required for these commercial material (CM) item ASTM material specification edition changes. ASME materials identified in ASME Boiler & Pressure Vessel Code, Section II Material Specifications as being identical to the ASME B31.3, Appendix E listed ASTM Material Specifications, for the year, alloy, type and / or grade, (if applicable), are acceptable for use. See Specification Exhibit 8 of 24590-BOF-3PS-MVSC-T0003, Section 2.1 for ASTM Material Specifications table for acceptable years.
1.4.1.1	The American Society of Mechanical Engineers (ASME) ASME B 16.11- 1991 , *Forged Fittings, Socket- Welding and*

	Threaded ASME 16.25-1986, *Buttwelding Ends* ASME B16.28-1986, *Wrought Steel Buttwelding Short Radius Elbows and Returns* ASME B16.36-1988, *Orifice Flanges* ASME B16.47-1990, *Large Diameter Steel Flanges NPS 26 through NPS 60* ASME B16.5-1988, *Pipe Flanges and Flanged Fittings NPS 1/2 through NPS 24 Metric/Inches* ASME B16.9-1986, *Factory-Made Wrought Buttwelding Fittings* ASME B36.10M-1985, *Welded and Seamless Wrought Steel Pipe* ASME B36.19M-1985, *Stainless Steel Pipe*
1.4.1.2	ASME Boiler and Pressure Vessel Code (B & PV) ASME B & PV Code Section V- latest edition, *Nondestructive Examination* ASME B & PV Code Section VIII, Division 1, latest edition, *Rules for Construction of Pressure Vessels* ASME B & PV Code Section IX- latest edition, *Welding and Brazing Qualifications*
1.4.1.3	American Society for Testing and Materials (ASTM) Material Specifications For ASTM material designations, refer to Exhibit 8, *Technical Supply Conditions for Pipe, Fittings, and Flanges*.
1.4.1.4	Pipe Fabrication Institute (PFI) Standards ES-7 - 1962 (R1984), *Minimum Length and Spacing for Welded Nozzles*
1.4.1.5	Manufacturers Standardization Society MSS SP-25-1978 (R1988), *Standard Marking System for Valves, Fittings, Flanges, and Unions* MSS SP-83-1987, Class 3000 *Steel Pipe Unions Socket Welding and Threaded* MSS SP-95-1986 (R1991), *Swaged Nipples and Bull Plugs* MSS SP-97-1987, *Integrally Reinforced Forged Branch Outlet Fittings*
1.4.2 Other Standards	The following standards are not reference standards of ASME B31.3, 1996, but are acceptable for use to facilitate ASME B31.3 piping fabrication, or are used for pipe fabrication that is not within the scope of ASME B31.3.
1.4.2.1	Pipe Fabrication Institute (PFI) Standards ES - 3, Fabricating Tolerance ES - 5, Cleaning of Fabricated Piping ES - 24, Pipe Bending Methods, Tolerances, Process, and Material Requirements ES - 31 , Standard for Protection of Ends of Fabricated Piping Assemblies
1.4.2.2	International Association of Plumbing & Mechanical Officials Uniform Plumbing Code (UPC), 1997 Edition

1.5 Reference Documents and Drawings	
1.5.2	Exhibit 3 of 24590-BOF-3PS-MVSC-T0003, *Cold Bending of Pipe*
1.5.3	Exhibit 4 of 24590-BOF-3PS-MVSC-T0003 , *General Welding and NDE Requirements for Supplier Fabricated Piping*
1.5.9	Exhibit 1 of 24590-BOF-3PS-MVSC-T0003, *Positive Material Identification (PM) for Shop Fabrication*
1.5.11	24590-WTP-3PS-G000-T0003, *Engineering Specification for Packaging, Handling, and Storage Requirements*
1.5.13	24590-WTP-PW-P30T-00001, *WTP End Prep Detail for Field Butt Welds*
1.5.14	Exhibit 8 of 24590-BOF-3PS-MVSC-T0003, *Technical Supply Conditions for Pipe, Fittings, and Flanges*
1.7 Cleaning	
1.7.1 Cleaning	
1.7.1.1	Perform cleaning after fabrication has been completed. Cleaned piping shall be free of loose rust or mill scale, blisters, grease, sand, oil, dirt, and other foreign materials.
1.7.1.2	Fabricated spools shall be cleaned in accordance with the standard cleaning method described in PFI-ES-5.
1.7.1.3	Clean austenitic stainless steel, nickel alloy, and titanium piping in a protected area that is free from airborne chloride contamination. Prevent contamination from non-stainless steel, non-nickel alloy or non-titanium particles such as machine chips, grinding dust, weld spatter, and other debris during fabrication by shielding or other suitable means.
1.7.1.4	Only austenitic stainless steel brushes not previously used on other material may be used on austenitic stainless steel piping. Stainless steel wire brushes that have not been used on other materials shall be used to clean nickel alloy or titanium.
1.7.1.5	Where solvent is required to remove grease or oil from austenitic stainless steel piping, acetone, or alcohol (ethyl, methyl, or isopropyl) shall be used. Alternatively, a detergent flush may be used in lieu of solvent cleaning with prior permission to proceed from Buyer.
1.7.1.6	Final cleaning materials in contact with austenitic stainless steel shall contain less than 200 ppm chlorides. If detergent cleaning is used, rinse austenitic stainless steel with potable water having no more than 100 ppm chloride content. After rinsing, the piping shall be drained out completely such that no standing pockets/puddles of water remain that may later concentrate by evaporation. Removal of excess rinse water may be augmented by swabbing, use of a "squeegee," or air blowing.
1.7.1.7	After cleaning, blow dry the interior surfaces of all piping with clean, filtered, oil-free air.
1.8 Packaging, Storage, Handling, and Protection	Packaging, handling, and storage of pipe spools are as list below. These requirements are based on the applicable requirements listed in Specification 24590-WTP-3PS-G000-T0003.

1.8.1 Sealing Openings	
1.8.1.1	Comply with the minimum end protection requirements criteria outlined in PFI-ES-31 to protect all openings and/or as required in the purchase order. The Buyer must provide review and give permission to proceed prior to use of each specific type of desiccant material. Fabrications must be clearly marked indicating desiccant inside.
1.8.1.2	Cover all pipe openings with metal, polyethylene, or nonmetallic end caps, flange protectors, or plugs. Polyethylene or nonmetallic end caps and plugs shall be friction fit, (e.g., Niagara series) or secured by other means. At a minimum, one of the caps or plugs on each spool shall be provided with a 1/8-inch max diameter vent hole to preclude the buildup of internal pressure. Avoid placing the cap or plug with the vent hole on a spool that is oriented in an upward, vertical position. Tape shall not be used to secure end caps or plugs. Clamps used for securing end caps, on stainless steel or alloy spools, shall be made of stainless material.
1.8.2 Marking	
1.8.2.2	Place paint markings so that paint is at least 4 inches away from a surface to be welded.
1.8.2.3	Any marking material and packing tape used on stainless steel or alloy material is required to be made from low chloride (less than 200 ppm) and low sulfur (less than 400 ppm) type material. The Supplier shall provide a chemical analysis report of the marker/tape for each lot or typical representative sample. The chemical analysis report shall be submitted for Buyer's review and permission to proceed. A copy of the report is not required with each shipment of pipe spools.
1.8.3 Protection During Shipping	
1.8.3.1	Block, strap, or otherwise hold pipe, fittings, and valves in position and further separate them by dunnage as necessary to prevent damage during shipment.
1.9 Submittals	
1.9.2	Submit the following documents for Buyer's review and permission to proceed as specifically noted in the purchase order:
1.9.2.2	Pipe spool sheets/extended spool sheets/detailed drawings for shop-fabricated spools (including identification of shop welds), when specifically required in the purchase order. Shop spool drawings and/or extended spool sheets based on isometric drawings provided by the Buyer may be generated by the Supplier. However, unless otherwise noted in the purchase order, pipe spool sheets/extended spool sheets/detailed drawings are not required to be submitted for review and permission to proceed. Final Supplier Quality inspection will be in accordance with the isometric or orthographic drawing, as applicable.

1.9.2.4	Welding/weld repair procedures and procedure qualification records (WPS/PQR).
1.9.2.5	Nondestructive examination (NDE) procedures prepared in accordance with the applicable code and/or standard, and ASME Section V and NDE reports including all radiographs as applicable to the purchase order and piping material class.
1.9.2.7	For components that are not coated, cleaning procedures only are to be submitted.
1.9.2.9	Bending procedures and bend qualification records.
1.9.2.12	Wall thickness measurement procedure for pipe bends.
1.9.2.14	Inspection procedure.
1.9.2.15	Chemical analysis report for marking material and packing tape.
1.9.2.16	Each specific type of desiccant material.
1.9.2.17	Procedure for measuring minimum wall thickness for bulk pipe and butt weld fittings. Submittal shall include Supplier's inspection and sampling plan. The term "butt weld fitting" includes elbows, tees, reducers, caps, laterals, crosses, and swages; however, it excludes, pipe nipples, flanges, socket weld fittings, and integrally reinforced fittings.
1.9.3	The following documentation shall be submitted for each spool as appropriate, with the spool shipment:
1.9.3.1	Pipe spool sheets/extended spool sheets/detailed drawings (as applicable) with heat numbers of piping and pressure containing parts or items.
1.9.3.2	Material test reports (MTRs) shall be submitted for each pipe spool shipment for all metallic pipe spool and weld filler materials. This is not applicable to Buyer supplied valve and /or components.
1.9.3.4	NDE results (including volumetric, surface, and visual examination results, as applicable) shall be documented and forwarded with the pipe spool shipment. CM pipe spools outside the HLW and PTF require a Certificate of Conformance (C of C) certifying the NDE was performed in accordance with the applicable codes and the test results were acceptable.
1.9.3.5	Pressure test results for fabricated piping, as applicable. CM pipe spools require a Certificate of Conformance (C of C) from the vendor certifying the pressure test was performed in accordance with the applicable codes and the test results were acceptable.
1.9.3.7	Wall thickness measurement reports. Wall thickness measurement applies to pipe bends, piping, bulk piping, and butt weld fittings. The wall thickness reports are to be submitted for these components for each heat/lot used for spool fabrication. In addition, the applicable bulk pipe and butt weld fitting wall thickness report is to be linked to every pipe and fitting on each extended spool sheet or referenced on each extended spool sheet where that heat/lot of pipe or butt weld fittings has been used. The term "butt weld fitting" includes elbows, tees, reducers, caps, laterals, crosses, and swages; however, it excludes pipe nipples, flanges, socket weld fittings, and integrally reinforced

	fittings.
1.9.3.8	Record of any major weld repairs. A major weld repair is when the depth of repair encroaches on specified minimum wall thickness which is 87 1/2% of generally published specification or standard nominal wall thickness. CM pipe spools require a C of C from the vendor certifying a major repair was performed and accepted in accordance with the applicable Buyer reviewed procedure where the Supplier has been granted permission to proceed. The C of C shall identify the spool piece mark and the work performed. Per Section 2.1.9, base metal repairs using welding shall not be performed.
2 Products	
2.1 Materials	
2.1.1 General	
2.1.1.1	All materials shall conform to the specified material specification and the applicable code. All materials shall be new and traceable to the respective MTRs.
2.1.1.1.2	For CM piping, outside BC or HtR areas, identify material by the specific ASTM or ASME material specification number and grade or type on shop spool drawings and extended spool sheets (as applicable), along with heat number or heat number code applied to or maintained on the pipe, traceable to the MTR.
2.1.1.1.3	Weld filler metal MTR/CMTR requirements are as listed in Exhibit 4 of 24590-BOF-3PS-MVSC-T0003, *General Welding and NDE Requirements for Supplier Fabricated Piping*.
2.1.1.2	Unless otherwise identified on piping design drawings, all materials shall conform to the piping material classes for the pipe class, except as allowed by specification Exhibit 8 of 24590-BOF-3PS-MVSC-T0003 and as specified below. Seamless pipe and fittings, if available, are preferred in all cases.
2.1.1.2.1	Where material is specified as triple stamped, seamless A106/A53/API 5L Grade B, the following single stamped materials are acceptable: (a) A 106 Grade B (b) Seamless A53 Grade B (c) Seamless API 5L Grade B
2.1.1.2.2	Where material is specified as double stamped, seam welded A53/API 5L Grade B, the following single stamped materials and/or triple stamped material are acceptable: (a) Seamwelded A53 Grade B (b) Seamwelded API 5L Grade B (c) Seamless A53/A106/API 5L Grade B
2.1.1.2.3	Where material is specified as dual grade Type 316/316L stainless steel, a single grade Type 316L is acceptable.

2.1.1.2.4	Where material is specified as dual grade Type 304/304L stainless steel, a single grade Type 304L is acceptable.
2.1.1.2.5	Where the purchase order description specifies pipe to be furnished "Beveled Both Ends," pipe furnished with "Plain Ends" is acceptable.
2.1.1.2.6	Where the purchase order description specifies pipe is to be furnished "Double Random Lengths," pipe furnished in "Single Random Lengths" is not acceptable.
2.1.1.3	Individual line service class material will be identified on piping design drawings by indicating the appropriate piping class. Stock codes will generally be assigned for each item of shop material. The supplier shall ensure that the stock code shown on the isometric Bill of Material matches stock codes attached to or inscribed on materials prior to their installation.
2.1.1.5	The Supplier shall purchase material based on the Buyer stock code's "long" or "purchase" description. The Buyer's short description shall not be used for purchasing material.
2.1.2 Material Traceability	
2.1.2.1	Material traceability (such as identification of the item to applicable material specification, heat, batch, lot, part, or serial number or specified inspection, test, or other records) also includes transferring material identification mark(s) prior to subdividing material for all piping material. Traceability is being able to trace the piping material to the applicable MTR. All piping material, regardless of quality level, requires traceability.
2.1.2.2	As a minimum, individual spools shall have a pipe spool sheet, extended spool sheet. or detailed drawing that reflects the heat number of pressure containing items. Heat numbers and general PMI locations of piping and pressure containing parts or items shall be noted on the pipe spool sheet, extended spool sheet, or detailed drawing for material traceability. A pipe spool sheet, extended spool sheet, or detailed drawing may be defined as the actual fabrication detail drawing, Bill of Materials, and/or traveling data table for that spool piece. Second sheets, if used, that provide spool material heat number information that is not shown on the pipe spool sheet, extended spool sheet or detailed drawing shall list the pipe spool number in order to maintain traceability. These sheets/drawings shall accompany each shipment of fabricated spools.
2.1.5 Positive Material Identification (PMI)	Identification (PMI) tests in accordance with Exhibit 1 of 24590-BOF-3PS-MVSC-T0003. The Supplier shall submit their PMI test procedure for Buyer's review and permission to proceed.
2.1.6 Material Commitment	The Supplier shall submit to the Buyer a complete itemized listing of all materials purchased or reserved from the Supplier's inventory for each project. The Supplier shall also provide, upon request, the current status of pre-bought or Buyer-furnished material.
2.1.7 Material Substitutions	All materials shall be in accordance with the Buyer-furnished drawings, the purchase order, and specifications, unless written

	permission to proceed is granted by the Buyer via the SDDR in accordance with the purchase order requirement.
2.1.8 Material Identification and Marking	
2.1.8.1	All materials shall be marked with the information and using marking materials required by the specific ASTM or ASME material specification.
2.1.8.2	Labeling with a marking pen on stainless steel and nickel based alloy material shall be done by any permanent method that will neither result in harmful contamination or sharp discontinuities, nor infringe upon the minimum wall thickness. All marking materials other than material manufacturer's marks shall be of the low chloride (less than 200 ppm) and low sulfur (less than 400 ppm) type. It is acceptable to use a rounded, low stress, vibro-etch tool for this marking.
2.1.8.3	Weld identification symbols must be recorded on detailed spool sheets and extended spool sheets (as applicable) with a cross-reference to any NDE report numbers.
2.1.8.4	Any piece of material not readily identifiable during fabrication shall be rejected, including other components welded thereto.
2.1.9 Damaged Materials	
2.1.9.1	Materials that have been damaged, gouged, or found to have defects affecting their form, fit, function, or encroaching on minimum wall thickness, shall not be used. Minor surface marks may be dressed, provided that the minimum wall thickness is not encroached upon after considering the manufacturing tolerances defined in the appropriate material or technical specification. Raised metal shall be blended into surrounding base metal. Base material repair of damaged material, using welding shall not be permitted.
2.1.9.2	Particular care must be taken with flange faces. Flanges are required to meet the requirements of ASME B16.5. Flange facing imperfections outside of those specifically discussed in ASME B16.5, Pipe Flanges and Flanged Fittings NPS 1/2 though NPS 24 Metric/Inches, are not permitted. In addition, should a scratch be deeper than the flange facing serrations, the flange may be refaced, provided the height of the raised faced portion of the flange is maintained. Weld repair of the damaged flange facing is not permitted.
2.1.9.4	The Supplier shall not make any base metal material repairs using welding.
3 Execution	
3.1 Fabrication	
3.1.1 General	
3.1.1.1	Fabricated piping shall be in accordance with Buyer-furnished design drawings and specifications. Use welded joint construction for all piping, except where otherwise called for on the design drawings and the piping material class.

3.1.1.2	Make all welds full penetration butt welds except as permitted otherwise for welded attachments, socket welds, slip-on flanges, and joggle pipe jacket. Mark all welds with welder's unique identification marks. It is acceptable to use a rounded, low stress, vibro-etch tool for this marking.
3.1.1.3	All flanges shall be installed with the bolt holes straddling the vertical centerline unless otherwise specified on the design drawings.
3.1.1.4	All welds performed by a supplier shall be shown on vendor spool sheets and extended spool sheets, as applicable. Additional requirements are as follows:
3.1.1.4.1	Pipe lengths composed of two or more welded-together segments of straight pipe at intervals of less than 6 feet are not permitted, except as specified in Sections 3.1.1.4.2 and 3.1.1.4.3.
3.1.1.4.2	Shop butt welds not represented on the isometric drawing(s) may be added to fabricate the spool(s) in accordance with the general configuration portrayed on the isometric drawing(s), provided the additional welds do not rest on pipe supports and provided the additional weld is not within 2 feet of existing butt welds or additional new butt welds. Bends shall not be replaced by elbows without prior written concurrence from the Buyer. The minimum required edge distance (D) between an integral attachment to the pipe and pipe weld or other inline components is provided in the table below. (The equation used to develop this table is $\sqrt{Rmt}$. Rm = Mean Radius of the pipe and t = thickness of the pipe.) **Table 1 Minimum Required Edge Distance Between Field and Shop Welds** **Nominal Pipe Size (inches)** / **D (inches)** 3” and under / 1 3.5” to 6” / 1 5/8 8” to 12” / 2 3/4 14” to 18” / 3 7/8 20” to 24” / 5 1/8
3.1.1.4.3	Addition of butt welds is preferred over the addition of socket welds, even in a socket welded system. However, socket welded couplings may be added by the Supplier to socket welded piping systems, provided the couplings are not located any closer than 2 feet from other welds, and provided the added couplings do not rest on pipe supports.
3.1.1.4.4	It is acceptable for the Supplier to add a socket welded coupling to one side of the field weld joint when just a field weld (without a coupling) is shown on an Isometric for a socket welded system.
3.1.1.9	Certain Buyer isometric drawings are dimensioned to the centerline of a Buyer field supplied and installed welded

	component between the two spools. For these isometrics the Supplier shall fabricate that portion of the spool length to the centerline of that component. Each of these spools shall have a plain end at the center point of the Buyer field installed welded component. Buyer is responsible for cutting and end preparation (as required) for field installation of this Buyer supplied component. These plain ends are not field fit up welds (FFW). As such do not require an additional 6" of pipe length.
3.1.2 Weld Joint Preparation	
3.1.2.1	Unless otherwise noted on the design drawings, field butt weld end preparations shall be in accordance with drawing 24590-WTP-PW-P30T-00001.
3.1.2.2	Do not use backing rings.
3.1.3 Bending	Pipe bending shall be in accordance with document Exhibit 3 of 24590-BOF-3PS-MVSC-T0003, except as follows:
3.1.3.1	Refer to standard PFI ES-24, Paragraph 5.1, for tolerances associated with specific bend angles as shown on project isometric drawings. Also, refer to PFI-ES-24, Paragraph 6 for form tolerances related to buckling.
3.1.4 Dimensional Tolerances, Except For Pipe Bends	Unless otherwise indicated on the design drawing, do not exceed the dimensional tolerances of PFI-ES-3 for fabricated piping assemblies.
3.1.5 Welding Processes	Use welding processes in accordance with document Exhibit 4 of 24590-BOF-3PS-MVSC-T0003 and the applicable code and/or standard.
3.1.6 Welding Procedures and Welder Qualifications	
3.1.6.1	Welding shall be performed by qualified welders in accordance with welding procedures prepared and qualified in accordance with the applicable code and/or standard, and ASME Section IX using procedures reviewed by the Buyer and after receiving permission to proceed.
3.1.6.2	Type 316L or Type 316LSi weld filler metal may be used for welding Type 304L stainless steel.
3.1.7 Flanges	Furnish flanges for flanged connections in accordance with the piping material classes and as shown on design drawings.
3.1.7.1	All slip-on flanges shall be double welded in accordance with paragraph 328.5.2 of ASME B31.3 unless directed otherwise by design document(s).
3.1.8 Branch Connections	
3.1.8.1	Branch connections shall be in accordance with the applicable piping material class (es).
3.1.8.2	Threaded branch fittings on piping spools that have been hot-dip galvanized shall have the threads "chased" after dipping to ensure that threads are free from excess galvanizing materials that would prevent the threaded joints from being made up upon installation.

3.1.9 Orifice Runs	Straight pipe orifice runs shall not contain welds, except at flanges. Pipe ends at orifice flanges shall be machine cut perpendicular to the pipe axis. Welds at orifice flanges shall be ground smooth inside. Pipe tap connections (if required) are to be drilled through the pipe wall and shall be smooth inside. Orifice flanges shall be drilled and tapped for jack screws. Buyer supplied drawings show the orientation of orifice flange taps and the locations of pipe taps. Unused orifice flange taps shall be supplied with appropriate plugs.
3.1.11 Rework of Fabricated Spools	
3.1.11.1	Reworked spools being shipped to the jobsite shall be provided with a Certificate of Conformance (C of C) stating the spools identified are the same spool number(s) originally delivered and received. The C of C shall state that the re-worked spools are in strict accordance and fully comply with the purchase order and all procedures and specifications. The C of C shall also state the re-work performed on each spool. If additional materials are added, or if additional documentation is provided (NDE reports, MTRs, etc.) a complete documentation package for that spool shall be furnished.
3.2 Inspection and Testing	
3.2.1 General	
3.2.1.1	The Supplier is responsible for nondestructive examination and testing of piping furnished under this exhibit.
3.2.1.2	All examination, inspection, and testing shall be in accordance with this exhibit and other governing codes and standards, as applicable. This includes nondestructive examination of the piping spools in accordance with the requirements for Normal Fluid Service piping in ASME B31.3-96.
3.2.1.3	Buyer's representative shall be provided free access to the Supplier's and Supplier's subcontractor's or Supplier's facilities, to witness, inspect, and report progress of work.
3.2.1.4	Note: No sub-supplier shall perform NDE work without prior submittal of the sub-supplier's NDE procedure and Buyer's review and permission to proceed.
3.2.2 Examination of Fabrication Welds	
3.2.2.1	Examine all completed pressure boundary welds in accordance with the ASME B31.3-96 and/or standard, including the requirements listed below, as applicable. Weld repair shall be examined according to the requirements used for the original weld.
3.2.2.2	Perform and evaluate examinations in accordance with procedures and acceptance standards prepared in accordance with the ASME B31.3-96 and/or standard, and the ASME Boiler & Pressure Vessel Code, Section V.

3.2.2.4 Weld NDE and Inspection Requirements	The following are the NDE and inspection requirements for piping welds. These requirements are summarized in Appendix A. The acceptance criteria are as listed in ASME B31.3, Table 341.3.2, for Normal Fluid Service Conditions with the following additions:
3.2.2.4.1	Where radiographic examination (RT) is allowed or specified for shop welds, the radiographic acceptance criteria for Normal Fluid Service apply, except that incomplete penetration shall not be permitted.
3.2.2.4.2	Where liquid penetrant examination (PT) or magnetic particle examination (MT) is allowed or specified, no cracks shall be permitted.
3.2.2.4.3	All shop girth welds require full visual examination in accordance with the requirements of ASME B31.3-1996, para 341.4.1 (a), and NDE examination in accordance with the requirements of ASME B31.3-1996, para 341.4.1 (b).
3.2.2.4.6	Fillet welds including socket welds, integral support welds, and non pressure and non load bearing piping attachment welds (e.g., cathodic protection clips) welds require NDE in accordance with ASME B31.3, para 341.4.1.
3.2.2.4.7	Integrally reinforced forged branch fitting connection welds, welded to the main piping run shall be examined in accordance with the requirements of ASME B31.3, para 341.4.1. The girth weld that connects the fitting to the branch pipe run shall be examined in accordance with requirements of ASME B31.3, para 341.4.1.
3.2.2.4.8	Full penetration welded stub-in lateral branch connection fittings used on gravity drain piping require 100% VT and 100% PT of final pass only
3.2.3 Pressure Testing	
3.2.3.1	Do not perform hydrostatic test on fabricated piping assemblies other than piping coated and wrapped in the Supplier's shop, and other spools when designated by approved documents.
3.2.3.2	Perform pressure test of coated piping in accordance with the applicable code prior to coating operations, unless the Buyer opts to leave joints uncoated for inspection during field hydrotest. Potable water shall be used for the pressure test performed by the Supplier. When pressure testing stainless steel piping, the test water shall not contain more than 200 ppm halogen. The Supplier shall submit a pressure testing procedure for Buyer's review and permission to proceed prior to performing the test. The Supplier shall also include a record of the test result as part of pipe spool documentation
3.2.3.3	Welding of integral supports shall be avoided in previously hydrostatically or pneumatically tested piping. Buyer Engineering shall be consulted immediately when this situation occurs.
3.2.3.4	After installation, all fabricated assemblies will be tested by others in accordance with the applicable code. Should any defect

	be detected during field testing, the defect will be repaired by the Buyer at Supplier's expense.
4 Configuration Management	Configuration management is maintained by fabrication and installation in accordance with approved drawings and procedures. Fabrication and installation shall be performed in accordance with approved documents. Where fabrication and installation cannot be accomplished in accordance with approved procedures and drawings, the Buyer shall be promptly notified via a SDDR or other suitable means. Fabrication and installation shall not proceed until a resolution is approved and proper documentation is provided.
5 Documentation and Submittals	Documentation is provided by approved procedures and drawings. Any records generated by working to procedures and drawings shall be submitted to the Buyer for logging and issuance. Refer to section 1.9 for submittal details.

Appendix A

Summary Table of Non-Destructive Examinations (NDE) of Pipe & Tubing Shop Welds

Table 1 Piping Weld Examination Requirements

SEE SECTIONS 2.1.4, 3.2.2.2, 3.2.2.3, 3.2.2.4 FOR APPLICABLE SHOP WELD NDE, INSPECTION, AND ACCEPTANCE CRITERIA REQUIREMENTS. 2. SEE NEXT SHEET FOR NDE LEGEND AND TABLE FOOTNOTES.

Type of Weld ↓	Piping ~~Outside Black Cells and Hard-To-Reach areas~~ [1]	Piping Inside Black Cells and Hard-To-Reach areas	Dual Containment (outside BC or HtR areas)	
			Inner Piping	Outer/Jacket Piping
All Girth and Miter Welds	100% VT 5% RT or 5% UT	100% VT 100% RT	100% VT 100%RT	100% VT 5% RT[9]
All Longitudinal Seam Welds on Seamwelded Pipe and Fittings	See Note 2	100% RT or 100% UT[3]	100% RT or 100% UT[3]	N/A
Outer Pipe Shop Performed Longitudinal/Clam Shell Welds for Dual Contained Piping	N/A	100% VT 100% RT or 100% UT	N/A	100% VT 5% RT[9] or 5% UT[9]
Double Encased Pipe Joggle Assemblies (shop welds on both inner and outer piping)	N/A	100% VT 100% RT	100% VT 100% RT	100% VT 100% RT
Sleeved Joggle Assemblies (shop welds on inner piping only)	N/A	100% VT 100% RT	100% VT 5% RT	N/A
All Pipe and Integral Attachment Fillet Shop Welds - including thermowell socket welds, integral support welds, non pressure & non load bearing piping attachment welds	100% VT	100% VT 100% PT or 100% MT	100% VT 100% PT or 100% MT	100% VT
All integrally reinforced forged branch fittings welded to main piping run. ~~For BC/HtR piping, if 100% RT will not produce an interpretable radiograph, In-Process Examination and liquid penetrant examination of the exterior of both the root and final pass weld is acceptable.~~ [4]	100% VT	100% VT 100% RT	100% VT 100% PT or 100% MT	100% VT

Welded branch connection fittings with or without added reinforcement welded to main piping run. ~~For BC/HtR piping, if 100% RT will not produce an interpretable radiograph, In-Process Examination and liquid penetrant examination of the exterior of both the root and final pass weld is acceptable.~~	100% VT 100% PT[8]	100% VT[3] 100% RT[9]	N/A	N/A
For BC/HtR piping, final pass of fillet weld on socket welded branch fitting to outer jacket pipe drains used in dual wall piping systems.[6]	N/A	100% VT 100% PT	N/A	N/A
For BC/HtR piping, fillet or full penetration welds attaching the end plate or cap closing the annulus between the outer jacket pipe and inner process pipe of dual containment piping spools shall be fully visual (VT) examined and fully radiographic examined (RT).[7] If 100% RT will not produce an interpretable radiograph, In-Process Examination and liquid penetrant examination of the exterior of both the root and final pass weld is acceptable.	N/A	100% VT 100% RT	N/A	N/A

Legend: VT = Visual Examination per ASME B31.3 para 344.2
RT = Radiographic Examination per ASME B31.3 para 344.5
UT = Ultrasonic Examination per ASME B31.3 para 344.6
PT = Liquid Penetrant Examination per ASME B31.3 para 344.4
MT = Magnetic Particle Examination per ASME B31.3 para 344.3

[1] Includes embedded piping, but does not apply to dual containment piping, double encased joggles, or sleeved joggles. Those requirements are specified elsewhere in Table 2.
[2] Longitudinal seam welds in seam welded stainless steel, Hastelloy, AL-6XN, Inconel and titanium pipe and fittings that are not in black cell and hard-to-reach areas but are within the HLW and PTF shall be 100% volumetrically (UT or RT) examined. Based on service applications this requirement is not applicable to seam welded carbon steel pipe and fittings within the HLW and PTF.
[3] Applies to longitudinal seam welds in all pipe and fittings, including all stainless, titanium, or nickel alloy, used in Black Cells or Hard-to-Reach areas, or for the inner pipe of dual containment piping.
[4] The circumferential weld that connects an integrally reinforced forged branch fitting to the branch pipe run shall be examined as a girth weld.
[5] This is applicable to specifically allowed applications in black cell and hard-to-reach areas listed in Section 3.2.2.3.6.
[6] This is applicable to specifically allowed applications in black cell and hard-to-reach areas listed in Section 3.2.2.3.7.
[7] This is applicable to specifically allowed applications in black cell and hard-to-reach areas listed in Section 3.2.2.3.8.
[8] 100% PT on final pass only.
[9] See Section 3.2.2.4.5 for in-process examination requirements for shop performed girth, miter or longitudinal welds that cannot volumetrically examined by RT or UT.

EXHIBIT 6 | PRESSURE VESSEL DESIGN AND FABRICATION

Specification 24590-WTP-3PS-MV00-T0001, REVISION 5 was used as applicable to create the following exhibit.

Note: All References on this exhibit are inclusive to this exhibit only.

Specification	Requirement
1 Scope	
1.1 Project Description and Location	This exhibit is included in the Purchase Order, Material Requisition or in the scope of work of subcontract packages. It defines the technical requirements for the design, fabrication, and testing of pressure vessels for the Hanford Tank Waste Treatment and Immobilization Plant (WTP) project located in the southeastern part of Washington State.
1.2 Acronyms and Definitions	
1.2.2	Containment: Components that contain active process fluids inside the plant process system. Refer to the MDS for the containment classification of components. • Primary Confinement: The boundary within which the process fluids, gases, and vapors are contained and confined during the plant process operation. In this document, the entire process vessel and nozzle walls are generally referred to as the Primary Confinement. • Primary Containment: The part of the Primary Confinement that is in contact with the process fluid. This is typically the wetted portion of the vessel wall below the top of the overflow. • Auxiliary Containment: This term is used in this document to identify the portion of a Primary Confinement that is not subject to a static pressure head of liquid but may be in contact with splashing liquid, vapor, or gases. This is typically the vessel components above the prescribed high operating liquid level. • Secondary Containment: The boundary that will contain process liquid if the Primary Containment is breached. This boundary will not normally be in contact with the process liquid. Typically, this is the cell liner or wall structure of the facility.
1.2.7	ECDS: The section of the MDS titled Equipment Cyclic Data Sheet. If components of a vessel are subjected to cyclic loads, those loads will be detailed in the ECDS.
2 Applicable Documents	
2.1 General	
2.1.1	Work shall be in accordance with the referenced codes, standards, and documents listed below, which are integral parts of this specification.
2.1.2	When specific chapters, sections, parts, or paragraphs are listed following a code, industry standard, or reference document, only those chapters, sections, parts, or paragraphs of the document are applicable and shall be applied. When more than one code, standard, or referenced document covers the same topic, the requirements for all must be met with the most stringent governing.
2.2 Codes and Industry Standards	
2.2.1	The Seller shall apply the latest issue, including addenda, at the time of request for quote or award as applicable for the following codes and industry standards with exceptions as noted.

Specification	Requirement
2.2.1.1	ASME Section VIII, Division 1 , Rules for Construction of Pressure Vessels, American Society of Mechanical Engineers
2.2.1.2	ASME Section II, Materials, American Society of Mechanical Engineers Use of later version of the code or standard directly comparable and equivalent in approach, Buyer approval is NOT required. If the later version of the code or standard is not directly comparable and essentially equivalent use of the later version requires AI's approval
2.2.1.3	ASME Section V, Nondestructive Examination, American Society of Mechanical Engineers
2.2.1.4	NBIC, National Board Inspection Code, National Board of Boiler and Pressure Vessel Inspectors
2.2.1.5	WRC-107, Local Stresses in Spherical and Cylindrical Shells due to External Loading, Welding Research Council
2.2.1.6	WRC-297, Local Stresses in Cylindrical Shells due to External Loadings on Nozzles— Supplement to WRC Bulletin No. 107, Welding Research Council
2.2.1.7	PFI Standard ES-24, Pipe Bending Methods, Tolerances, Process and Mechanical Requirements, Pipe Fabrication Institute, Engineering and Fabrication Standard
2.2.1.8	ASME Section VIII, Division 2, Rules for Construction of Pressure Vessels - Alternative Rules, American Society of Mechanical Engineers, (Note: Code year not later than 2004 Edition with 2005 and 2006 Addenda).
2.2.1.9	ASME B31.3, Process Piping, 1996, American Society of Mechanical Engineers
2.2.1.10	AISC M016 (AISC 316-89), ASD Manual of Steel Construction, 9th Edition, American Institute of Steel Construction
2.2.1.11	ANSI/AISC N690-1994, Specification for the Design, Fabrication, and Erection Steel Safety-Related Structures for Nuclear Facilities, American Institute of Steel Construction
2.2.1.12	SNT-TC-1A, Recommended Practice No. SNT-TC-1A, American Society for Nondestructive Testing, Inc. (Note: Refer to the Quality Assurance Program Requirements Data Sheet in the Purchase Order for acceptable editions).
2.2.1.13	ANSI/AWS D1.1, D1.6 Structural Welding Code
2.2.2	The Seller shall apply the issue and addenda as referenced in Table U-3 of ASME Section VIII, Division 1 for the following codes and industry standards:
2.2.2.1	ASME B16.5, Pipe Flanges and Flange Fittings NPS 1/2 through NPS 24
2.2.2.2	ASME B16.47, Large Diameter Steel Flanges NPS 26 through NPS 60
2.2.3	The Seller shall apply the issue and addenda as stated for the following codes and industry standards:
2.2.3.1	ASCE 7-98, Minimum Design Loads for Buildings and Other Structures, American Society of Civil Engineers
2.3 Related Documents	Other project specifications, standards, and standard details as listed or referenced in Section 2 of the purchase order shall be used as applicable for the design and fabrication of the vessels.
2.4 Project Documents	
2.4.1	Exhibit 7 of 24590-BOF-3PS-MVSC-T0003, *Seismic Qualification Criteria for Pressure Vessels*

Specification	Requirement
2.4.3	Exhibit 1 of 24590-BOF-3PS-MVSC-T0003, *Positive Material Identification (PMI) for Shop Fabrication*
2.4.4	24590-WTP-MV-M59T-00001, Pressure Vessel Tolerances Standard Details
2.4.5	24590-WTP-3PS-MVB2-T0001, *Engineering Specification for Welding of Pressure Vessels, Heat Exchangers and Boilers*
2.4.7	24590-WTP-3PS-G000-T0003, Engineering Specification for Packaging, Handling and Storage Requirements
2.4.8	Exhibit 2 of 24590-BOF-3PS-MVSC-T0003, *Structural Design Loads for Seismic Category IV Equipment and Tanks*
3 Design Requirements	
3.1 Basic Requirements	
3.1.1	Unless otherwise specified, all vessels shall be designed and fabricated in accordance with ASME Section VIII, Division 1, any additional requirements of this exhibit, MDS, and the referenced Drawings.
3.1.3	Seller shall consider design details and material thickness shown on Drawings and MDS as the minimum requirements.
3.1.4	Seller shall not scale Drawings
3.2 Loadings	
3.2.1	Seismic analysis shall be performed per the requirements of Exhibit 7 of 24590-BOF-3PS-MVSC-T0003.
3.2.2	If wind or snow loadings are specified on the MDS, the design for such loadings shall be based on the requirements of the ASCE 7, using the indicated wind and snow loading parameters.
3.2.3	If the MDS contains an ECDS, the Seller shall analyze for fatigue per the requirements detailed in 24590-WTP-3PS-MVB2-T0001, *Engineering Specification for Welding of Pressure Vessels, Heat Exchangers and Boilers*. Seismic loadings shall not be considered when performing a fatigue analysis.
3.2.4	Unless indicated otherwise on the MDS or Drawings, the Seller shall design the vessels to support process liquid filled to the top of the overflow.
3.3 Corrosion/Erosion Allowance	
3.3.1	Corrosion allowance is specified on the MDS and shall be applied to each surface exposed to process vapor or liquid. Internal piping shall have the specified corrosion allowance applied to both internal and external surfaces.
3.3.2	Unless otherwise specified, corrosion allowance shall not be applied to external vessel surfaces.
3.3.3	Erosion allowances, where required, will be specified in the MDS.
3.4 Heads	The Seller shall use head shapes as specified on the vessel drawing. Deviations from this profile may be considered for economic, space or fabrication concerns. Any change, however, requires the approval of the Buyer via SDDR.
3.5 Supports and Anchors	
3.5.1	Seller shall provide vessel supports as illustrated on the Drawings.

Specification	**Requirement**
3.5.2	Supports and anchors shall be designed to secure the buoyant vessel in case the vessel is empty and submerged to the level indicated in the MDS.
3.5.3 Criteria	Detail design of vessel supports shall be in accordance with the recommendation of ASME Section VIII, Division 1, Appendix G, except as noted below.
3.5.3.3	SC-IV stainless steel vessel supports are to be designed in accordance with the allowable stresses from N690 to the load combinations from Exhibit 2 of 24590-BOF-3PS-MVSC-T0003, *Engineering Specification for Structural Design Loads for Seismic Category IV Equipment and Tanks*.
3.6 Nozzles and Manways	
3.6.1	Nozzle wall thickness shall be per ASME Section VIII, Division 1 and at least that specified on the Drawings. Seller shall understand that minimum nozzle thicknesses indicated on the Drawings may not support the nozzle loading requirements listed in Appendix A.
3.6.2	Nozzles and manways and their reinforcements located on the head shall be located fully within the crown region of the head unless noted otherwise on the Drawing.
3.6.3	All nozzles shall be set-in type or through type with full penetration welds. All nozzles, which are flush with the inside surface of the vessel, shall be rounded to 1/8 inch minimum radius as shown below. Nozzles for pressure relief devices, vents, and drainage shall be flush with the inside surface of the vessel. Nozzles with internal projection in primary containment shall have an additional fillet weld between the internal projection and the inside surface of the shell or head.
3.6.4	The following illustrates acceptable and unacceptable nozzle configurations and welding: 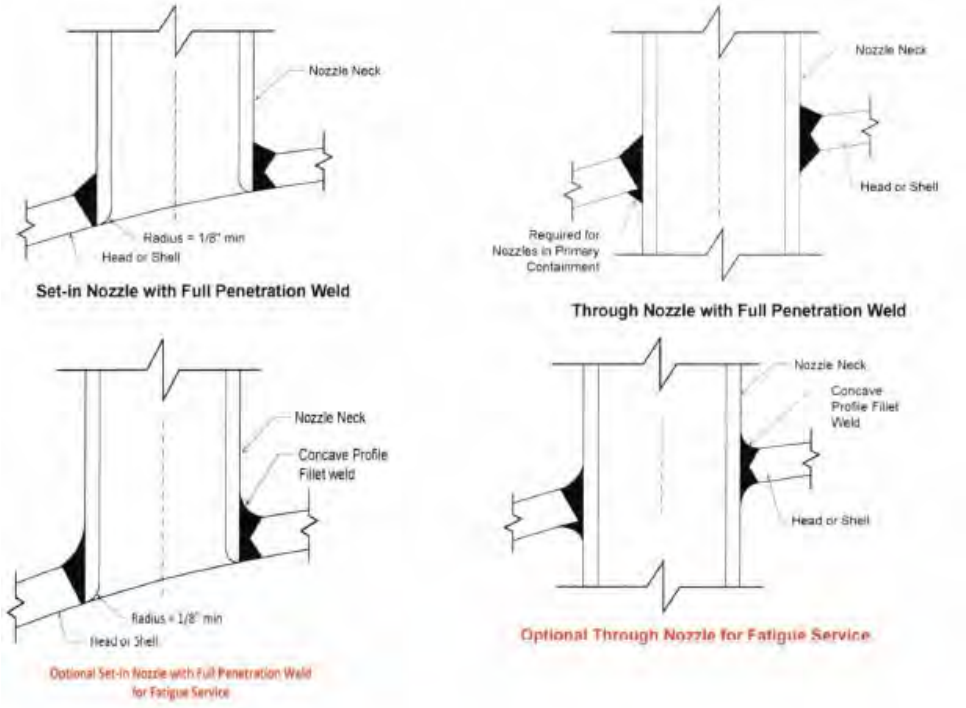

Specification	Requirement
	Unacceptable Nozzle Connections 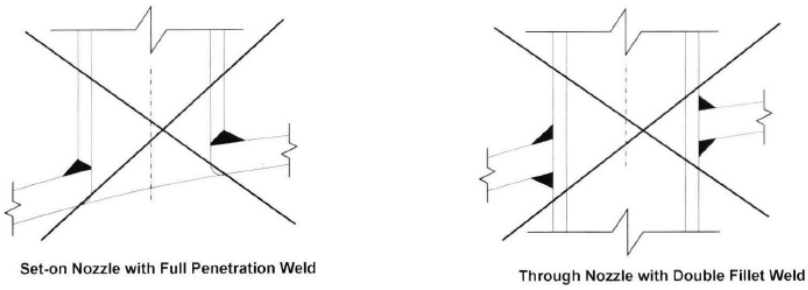 Set-on Nozzle with Full Penetration Weld Through Nozzle with Double Fillet Weld
3.6.5	Flange boltholes shall straddle natural vessel centerlines unless otherwise specified.
3.7 Nozzle Loading	
3.7.1	Unless otherwise specified, Seller shall design nozzles for the minimum nozzle design loads listed in the applicable table of Appendix A for the connected pipe size. Nozzles/shell on vessels are to be designed according to the methods of WRC-107, WRC-297 as a minimum.
3.7.2	Appendix A lists minimum design nozzle loads by nozzle size, connecting pipe material, and Seismic Category for weight, seismic, and thermal expansion cases. The coordinate system conforms to the 'right hand rule'. Loads provided in Appendix A do not have a sign convention; Seller must ensure that the direction of load application provides the most conservative stresses at the nozzle to shell or head junction. The Y-axis is vertical and in the direction of gravity regardless of the orientation of the nozzle. Loads act at the juncture of the nozzle and shell.

Specification	**Requirement**
3.7.3	Nozzle load combinations to be considered for Primary and Secondary Stress in the design shall be: Weight + Seismic + Operating Pressure + Thermal Load (Appendix A) Note: Thermal Loads listed in Appendix A are from the loads resulting from the restrained free end movement of the attached pipe and are considered as primary loads per paragraph 4-138 of Appendix 4 of ASME VIII Division 2. With regard to the radial load, the internal pressure shall not be used to oppose the compressive stress due to the force acting inwards; for this load condition a null pressure condition is to be considered to exist. Nozzle load combinations to be considered for Secondary Stress in the design shall be: Weight + Operating Pressure + Thermal Load (Appendix A) + General Thermal (per code definition)
3.7.4	The nozzle loads provided are for the piping connected to the external nozzle. If a nozzle projects and is loaded internally to the vessel, design the nozzle for the sum of the internal and external loads.
3.7.5	The nozzle loads due to thermal expansion listed in Appendix A are estimated based on the operating temperature of 350 °F. If the maximum operating temperature of the attached pipe is less than 350 °F, the nozzle thermal loads may be reduced by a scale factor of the absolute value. of $\left\lvert \frac{X-70}{350-70} \right\rvert$ Where X is the maximum vessel operating temperature of the attached pipe.
3.8 Nozzle Reinforcement	
3.8.1	When required, suitable nozzle reinforcements must be provided. Reinforcement methods are limited depending on the assigned Design Level and cell designation. Refer to Section 6 for allowable reinforcement methods. If the wall thickness of the nozzle neck is greater than that of the connecting piping, the requirements of ASME Section VIII, Division 1, and Figure UW-13.4 shall be satisfied.
3.8.2	Nozzle reinforcing pads, where permitted, shall have one-piece construction (not segments). Nozzle insert plates (integral pads) shall be in accordance with ASME Section VIII with a 3 to 1 taper.
3.8.3	For external nozzle reinforcing pads, the pad thickness shall not exceed 1.5 times the thickness of the penetrated shell. To meet nozzle loading requirements, pad diameter may exceed the limits of reinforcement per ASME Section VIII, Division 1. Pad width shall be at least 2 inches but shall not exceed ten times the thickness of the pad. Each pad shall have single 1/8 inch nominal pipe size (NPT) telltale hole for testing purposes. On completion of all fabrication activities, the hole shall be fitted loosely with a screwed plug of the same material as the reinforcement plate.

Specification	Requirement
3.8.4	The following illustrates acceptable reinforcement practices for nozzles irrespective of Design Level: 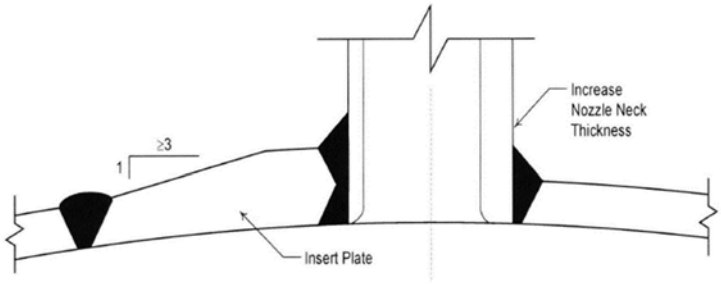 **Nozzle Reinforcement Methods** **for All Design Levels**
3.8.5	Nozzles on Commercial Grade may use external reinforcing pads (See figure below). As a warning, the nozzle loads specified in Appendix A may exceed the practical use of repads. In such cases, the Seller should consider locally increasing the thickness of the shell or head with an insert plate or increasing the nozzle neck thickness as required. The following illustrates acceptable reinforcing practices with full penetration welds for nozzles on Commercial Grade vessels. 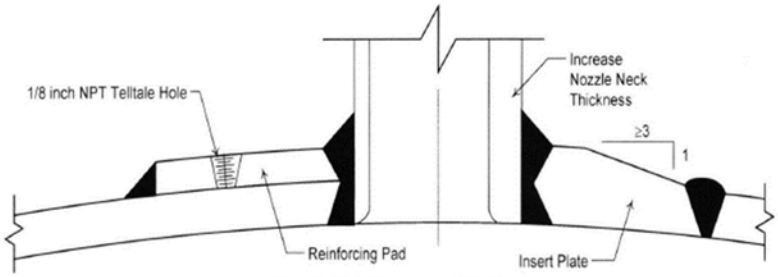 **Nozzle Reinforcement Methods** **Only for Commercial Grade Vessels** **Not Located in a Black Cell**
3.8.6	Material used for nozzle reinforcement shall be the same as the parent vessel unless approved by the Buyer as stated on the MDS.
3.8.7	Structural reinforcing elements such as reinforcing rings or pads (integral or non-integral) can be used as necessary to accommodate new design load combinations on fabricated and partially fabricated vessels. Any butt-weld seams to be covered by the pads shall be ground flush and radiographically examined, in accordance with ASME Section VIII, Division 1, subdivision UW-51, before the reinforcing pads are welded in place. Reinforcing pads may be formed to the required shape by any process that will not unduly impair the physical properties of the material. Reinforcing pads shall be fitted to conform to the curvature of shell, head, or other surfaces to which they are attached to minimize flat spots and horizontal surfaces that could collect solids. Edges of non-integral pads shall be tapered 3 to 1 minimum to match the height of the legs of the attaching fillet welds. The fillet welds shall fully seal the dead space between the pad and the shell, head, or other surfaces to which the pad is attached.

<table>
<tr><th>Specification</th><th>Requirement</th></tr>
<tr><td>3.9 Internal Components and Supports</td><td></td></tr>
<tr><td>3.9.1</td><td>Design of support members for vessel internals shall be the responsibility of the Seller.</td></tr>
<tr><td>3.9.1.1</td><td>Piping Internal to the Vessel

Piping internal to the vessel is to be designed in accordance with ASME B31.3-1996, Process Piping with following modification:

In Table D300, the description of welding tee per ASME B16.9 shall be revised so it is consistent with that shown in Table D300 of ASME B31.3-2002:

<table>
<tr><th></th><th></th><th colspan="2">Stress Intensification Factor [Notes (2), (3)]</th><th></th><th></th></tr>
<tr><th>Description</th><th>Flexibility Factor k</th><th>Out-of-Plane, i_0</th><th>In-Plane i_i</th><th>Flexibility Characteristic, h</th><th>Sketch</th></tr>
<tr><td>Welded tee per ASME B16.9 [Notes (2), (4), (6), (11), (13)]</td><td>1</td><td>$\frac{0.9}{h^{2/3}}$</td><td>3/4 i_0 + 1/4</td><td>$3.1\frac{\overline{T}}{r_2}$</td><td>Same as ASME B31.3-1996</td></tr>
</table>
This means that for welding tees per ASME B16.9, note 11 in Table D300 is also changed to:

(11) If $r_x \geq 1/8 D_b$ and $T_c \geq 1.5\overline{T}$, a flexibility characteristic of $4.4\overline{T}/r_2$ may be used.</td></tr>
<tr><td>3.9.1.4</td><td>SC-IV stainless steel support structures within the vessel that support items such as the internal piping or other internal components, that are away from the discontinuity shall be designed in accordance with the allowable stresses from N690 to the load combinations from Exhibit 2 of 24590-BOF-3PS-MVSC-T0003, Engineering Specification for Structural Design Loads for Seismic Category IV Equipment and Tanks. The support at the discontinuity with the vessel is within the code pressure boundary and shall be designed per ASME Section VIII.</td></tr>
<tr><td>3.9.3</td><td>Seller shall design support members to avoid the column of space directly below the manway.</td></tr>
<tr><td>3.9.4</td><td>The design of internal supports shall consider stresses caused by differential thermal expansion.</td></tr>
<tr><td>3.9.5</td><td>If indicated on Drawings, the internal surface of the head or shell subjected to direct impingement of process fluid shall be protected by a wear plate. See the MDS for the wear plate material.</td></tr>
<tr><td>3.9.6</td><td>Internal process piping which opens to the vessel contents shall be designed for the vessel design pressure and temperature or greater. Internal process piping which is connected to equipment internal to the vessel, shall be designed to that internal equipment design pressure and temperature.</td></tr>
</table>

Specification	Requirement
3.10 External Components and Supports	
3.10.1	If the MDS specifies insulation, the Seller shall provide and install insulation supports per the Drawings.
3.10.2	Lifting and tailing lugs shall be provided and installed by the Seller per the Drawings. The Seller may propose alternate designs and submit SDDR for Buyer approval prior to detail design.
3.10.3	The Seller is responsible for determining the necessity of stiffening rings.
3.10.4	If specified on the Drawings, Seller shall provide and install support clips for piping or platforms. Materials internal to the vessel shall match the material of the shell.
3.10.5	If indicated on the Drawings, Seller shall provide and install grounding lugs.
3.10.7	The base of the vertical vessel support skirt shall be marked, using a line of welding bead, at the 0 degree orientation as shown on the Drawings.
3.10.8	If a separate ring beam support is specified on the vessel drawing, the top flange shall be marked, using a line of welding bead, at the 0 degree orientation as shown on the Drawings. Vendor shall include ring beam geometry in their vessel/skirt analysis and shall provide forces and moments at the bottom of ring beam at embed location/interface.
3.10.9	The external supports; skirts, legs, saddle, lugs, etc., shall be designed in accordance with AISC M016 (AISC 316-89, 9th edition). The support at the discontinuity and with vessel is within the code pressure boundary and shall be per ASME Section VIII.
4 Materials	
4.1 General	
4.1.1	Materials shall be new and free from defects. Classification of fabrication materials shall be in accordance with ASME Section II. The Seller shall furnish legible copies of the mill test reports from the manufacturer for materials comprising the Primary Confinement, internals, supports, and welded attachments. Other materials shall be provided with certified statements that the material meets the requirements of ASME Section II.
4.1.2	Material shall be furnished to the specification and grade shown on the MDS. The fabricator shall not substitute materials without written approval from the Buyer.

Specification	Requirement
4.1.3	Contact materials including marking materials, temperature indicating crayons, adhesive backed and pressure sensitive tape, and barrier and wrap materials may be used only under the following limits: • The total halogen content shall not exceed 200 parts per million (PPM) • The total sulfur content shall not exceed 400 PPM • No intentionally added low melting point metals such as lead, zinc, copper, tin, antimony, and mercury. Anti spatter compounds shall not contain chlorine, fluorine, sulfur, mercury or other low melting point metals. Materials and residue shall be completely removed when no longer required. Cleaning materials may be non-halogenated solvents or potable water containing no more than 50 PPM chloride. Contact materials shall be controlled and documented in accordance with the Seller's inspection and test plan as approved by the Buyer.
4.1.4	Seller shall maintain a positive system of identification of materials used in the fabrication of each vessel per Exhibit 1 of 24590-BOF-3PS-MVSC-T0003.
4.2 Pipe Fittings	Pipe fittings shall conform to the appropriate ASME and ANSI standards for materials and dimensions unless otherwise stated in the purchase order.
5 Fabrication	
5.1 General	
5.1.1	Seller shall, if necessary, provide temporary stiffening and jigging to prevent shell distortion during fabrication, welding processes, heat treatment, hydrostatic testing, or shipment.
5.1.2	Fabrication tolerances shall be in accordance with ASME Section VIII, Division 1 and standard drawing 24590-WTP-MV-M59T-00001.
5.1.3	The sequence of fabrication shall be planned to permit maximum access to the internal surfaces to enable examination of all welds.
5.1.4	Plates and pipes shall be cut to size and shape by machining, grinding, shearing, plasma, laser, or water jet cutting. Plates, 3/8 inch thick and above, cut by shearing, shall either be dye penetrant tested on the sheared edge or have 3/8 inch allowance left on the edges which shall be removed by machining or grinding. All thickness of plate or pipe cut by air plasma cutting shall have the edges dressed to a smooth, bright finish. Material cut by the inert gas shielded plasma, laser or water jet process will not require further dressing other than deburring. All lubricants, burrs, and debris shall be removed after cutting.
5.1.5	All stamps used for identification reference markings shall be of the low stress type. Stampings shall not be located near discontinuities.
5.1.6	If a butt welded seam is required between materials of different thickness, the thicker material shall normally be machined on the side away from the process liquid. Machining shall ensure a smooth finished profile with no sharp corners and shall be in accordance with ASME Section VIII, Division 1 .
5.1.7	When rolling any austenitic stainless plate, care shall be taken to prevent carbon pickup or contamination of rolled material. The work area shall be free of carbon steel grindings and general cleanliness shall be maintained to preclude carbon contamination.

Specification	Requirement
5.1.8	Only stainless steel brushes, clean iron-free sand, ceramic, or stainless steel grit shall be used for cleaning stainless steel or nonferrous alloy surfaces. Cleaning tools or materials shall not have been previously used on carbon steel.
5.1.9	Internal piping bends shall have a center line radius of four times the pipe nominal diameter. In confined spaces, the centerline radius may be reduced to three times the outside diameter of the pipe. Piping shall not be terminated or butt welded within the bend. If a circumferential butt weld in the arc of a pipe bend is necessary, the bending process shall comply with PFI Standard ES-24 and require Buyer's prior approval via the SDDR process. The circumferential butt weld shall be radiographed prior to and after bending.
5.1.10	Pipe bending methods, tolerances, processes, and material requirements shall comply with PFI Standard ES-24 and require Buyer's approval. These requirements shall apply equally to tube bending processes. Seller shall submit a pipe bending procedure for Buyer review prior to use.
5.2 Layout	
5.2.1	Plate size shall be chosen to minimize welding. For horizontal vessels, the longitudinal seams in cylindrical shells and conical heads shall be located above the specified normal operating level, where practical. Longitudinal seams shall be completed before welding any adjoining circumferential seam.
5.2.2	The longitudinal seams of adjacent shell courses shall be staggered by a minimum length (measured from the toe of the welds) of 5 times the plate thickness, or 4 inches whichever is greater. Where it is considered impractical to meet this requirement, Seller shall submit a proposed layout to the Buyer for approval via the SDDR process.
5.2.3	For large diameter formed heads, where two or more plates are butt welded prior to forming, the butt welds shall be located such that the weld in the knuckle region is minimized.
5.2.4	Saddles shall be continuously welded to the shell. Welded seams under the saddle or wear plate are not permitted. Longitudinal weld seams in the shell should not be located within 15 degrees of the horn of the saddle or wear plate.
5.2.5	Plate layouts shall be arranged so that longitudinal and circumferential weld seams clear all nozzles, manways, and their reinforcing pads to the maximum extent possible. A minimum clearance of eight times the plate thickness from the toes of the welds is required. Where it is considered impractical to meet this requirement, Seller shall submit a proposed layout of all weld joints to the Buyer for approval via the SDDR process.
5.2.6	Structural attachment welds such as internal support rings or clips, external stiffening rings, insulation support rings, and ladder, platform or pipe support clips shall clear weld seams by a minimum of 2 inches. If overlap of pad type structural attachments and weld seams is unavoidable, the portion of the seam to be covered shall be ground flush and radiographically examined before the attachment is welded. The seam shall be radiographed per ASME Section VIII, Division 1, Paragraph UW-51 for a minimum distance of 2 inches beyond the edge of the overlapping attachment. Any protrusion through the weld seam when unavoidable shall be radiographically examined after completing the joint weld for at least minimum distance of 8 times the thickness of thicker material at protrusion. Radiographic examination of longitudinal weld seams is not required when single plate edge type attachments such as tray support rings, stiffening rings, insulation support rings, ladder, platform, or pipe support clips cross such weld seams.

Specification	Requirement
5.3 Nozzles, Manways, and Reinforcing Pads	
5.3.1	For forged nozzles connecting to pipe of lesser wall thickness, the Seller shall prepare the nozzles per ASME Section VIII, Division 1, Figure UW-13.4.
5.3.2	If a manway is specified with a welded cover, the cover shall be tack welded to the manway neck, prepared for field welding to the manway neck, sealed to prevent dirt and water from entering the vessel using adhesive tape which meets the contact material requirements. The cover shall be marked with the plant item number of the vessel.
5.3.3	Nozzles to be butt welded to connecting pipe shall be prepared for field welding and fitted with a plastic or rubber protective cover and sealed to prevent dirt and water from entering the vessel using adhesive tape which meets the contact material requirements.
5.4 Welding Requirements	
5.4.1	Seller shall comply with 24590-WTP-3PS-MVB2-T0001, *Engineering Specification for Welding of Pressure Vessels, Heat Exchangers and Boilers*.
5.4.2	All welding shall be continuous. Stitch welding is prohibited.
5.4.3	Joints shall be assembled and retained in position for welding. The use of manipulators or other devices to permit welding in the flat position should be employed where practical.
5.4.4	All attachments such as lugs, brackets, nozzles, pads and reinforcements around openings and other members (when permitted) shall follow the contour and shape of the surface to which they will be attached. The gap at all exposed edges to be welded shall not exceed the greater of 1/16 inch or 1/20 of the thickness of the attachment at the point of attachment.
5.4.5	Where fillet welds only are used, the maximum gap between the components being joined shall be 1/8 inch. The components shall be clamped or otherwise maintained together during welding.
5.4.6	Attachment point of spiders, braces, or other temporary attachments shall match the material of the vessel.
5.4.7	All temporary attachments shall be removed prior to shop hydrotest unless specifically approved by the Buyer.
5.4.8	Where practical, internal structural components and piping welds shall be full penetration. If it is not practical, seller shall propose fillet welded attachments for Buyer approval via the SDDR process.
6 Design and NDE Requirements	
6.1 All Design Levels	

Specification	**Requirement**
6.1.1	The shell and head sections which are subjected to concentrated or large loads through welded attachments (such as lifting and tailing lugs) shall, prior to welding, be ultrasonically examined over 100 percent of the areas, in accordance with the following: • For connections or attachments directly welded to the shell or head, the area tested shall extend 3 inches beyond the extremity of the proposed weldment • For connections or attachments welded via a reinforcement or doubler plate, the shell area tested shall extend 5 inches beyond each side of the perimeter of the proposed fillet weld attaching the reinforcing or doubler plate to the shell or head • Not required for nozzle penetrations.
6.1.2	All full penetration welds attaching internal or external structural components to the heads or shell shall be ultrasonically tested. If fillet welds except for Lifting and Tailing Lugs are permitted by writing by the Buyer and are not readily ultrasonically tested, they may be dye penetrant tested or magnetic particle tested with approval from the Buyer via the SDDR process.
6.1.3	All full penetration welds forming part of the jacket shall be ultrasonically tested.
6.1.6	Additional NDE requirements are specified in the drawings and MDS.
6.4 Additional Requirements for Commercial Grade (CM) Vessels	
6.4.1	Nozzles may use either a pad or integral reinforcement.
6.4.2	The following weldments shall be subject to volumetric testing unless otherwise indicated on the MDS or Drawings: • At least 10 percent of the length of each welder's production of vessel main seams butt welds. The minimum extent of volumetric testing shall include all "T" junctions and 10 percent of the remaining longitudinal weld with a 6 inch minimum length of volumetric testing. • For nozzle-to-shell welds located in the Primary Containment, at least 10 percent of the number of welds made by each welder over 100 percent of its circumference. • At least 10 percent of butt welds in internal piping for the full circumference. Radiography is the preferred method of volumetric testing. Where it is considered impractical to perform radiographic examination due to joint configuration, the Seller may propose ultrasonic examinations; the seller shall use the SDDR process to propose ultrasonic examinations. The SDDR shall include UT procedure reference, technical justification of UT proposal for every weldment and schematic location of every weldment proposed to be UT tested.
7 Tests and Inspections	

Specification	Requirement
7.1 Hardness Testing for Austenitic Stainless Steel Components	
7.1.1	Hardness testing is required when austenitic stainless steel plates are cold formed to make sections such as angles, channels, and conical sections. This requirement is not applicable to the cold forming of dished heads, which is covered by the relevant section of ASME Section VIII, Division 1.
7.1.2	Hardness testing is required when austenitic stainless steel pipe is cold formed for bends with a centerline radius less than three times the nominal pipe diameter.
7.1.3	Any cold forming process, which may significantly increase hardness, shall be in accordance with an approved procedure, which contains hardness testing. The procedure shall be submitted for Buyer's approval.
7.1.4	Hardness testing shall be performed on areas subject to the greatest deformation after cold working or any rework or rectification. The maximum permitted hardness is HRB 92 or as indicated by the material specification acceptance criteria for hardness.
7.1.5	If the maximum permitted hardness is exceeded, the Seller shall solution anneal (heat treatment) in accordance with the applicable ASME specification for that material. Heat Treatment process shall include heating and cooling rates, thermocouple locations, and type of heating equipment. Seller shall submit a written procedure for suitable heat treatment and testing for Buyer's approval.
7.2 Nondestructive Examinations	
7.2.1	Radiography, ultrasonic testing, visual examination, magnetic particle, and dye penetrant examination, where specified or required, shall be performed in accordance with ASME Section VIII, Division 1 and ASME Section V, and procedures developed and submitted to the Buyer for review prior to use.
7.2.2	All mandatory nondestructive examination (visual, surface flaw, and volumetric) shall be carried out after the completion of fabrication, including any heat treatment. Where Seller carries out additional nondestructive examination prior to any heat treatment process, such examinations shall be included in the Quality Plan or Inspection Schedule. The Buyer's representative need not witness this additional nondestructive examination; however, the records of such inspection shall be made available to the Buyer's representative.
7.2.3	Nondestructive examination must be performed by an inspector certified to the requirements of SNT-TC-1A. The interpretation of the results shall be by either Level II or Level III inspectors certified to SNT-TC-1A. Visual examination is not included in this requirement.
7.2.3.1	All weld visual examinations shall be performed by personnel certified in accordance with American Society for Non-Destructive testing (ASNT) Recommended practice SNT-TC-1A, Level I, II, or III or certified in accordance with AWS QC-1 as either a Certified Welding Inspector (CWI) or a Senior Certified Weld Inspector (SCWI)
7.2.4	Ultrasonic testing, where specified by the Buyer or proposed by the Seller, shall be in accordance with Appendix 12 of ASME Section VIII, Division 1.
7.2.5	Radiographic acceptance criteria shall be in accordance with ASME Section VIII, Division 1, Paragraph UW-51 where full radiography is required or UW-52 where spot radiography as defined in this exhibit is per Section 6.4.2.
7.2.7	Dye Penetrant testing, where specified by the Buyer or proposed by the Seller, shall be in accordance with Appendix 8 of ASME Section VIII, Division 1.

Specification	Requirement
7.2.8	Magnetic Particle testing, where specified by the Buyer or proposed by the Seller, shall be in accordance with Appendix 6 of ASME Section VIII, Division 1.
7.2.9	Weld visual examination, where specified by the Buyer or proposed by the Seller, shall be in accordance with ASME Section V, Article 9.
7.2.10	Fillet Weld Measurement: • A fillet weld leg size specified on the drawing weld symbol is the minimum size required 360 degrees around the nozzle/attachment. The effective throat based on that fillet size must be fully met around that circumference, including the obtuse (downhill) location. Both leg and throat dimensions must be met as an example, for a specified fillet weld leg size of 1/4", the throat thickness on the obtuse side as shown in the figure below is NOT acceptable (less than 0.707 x 1/4") and consequently the actual leg size must be increased on the obtuse side to meet an effective throat thickness of 0.707 x 1/4". For angles greater than 135 degrees, submit an SDDR for buyer review and approval. Fillet weld design is applicable between 60 degrees and 135 degrees (per AWS D1.1, Section 16, D1.6 Annex B) any weld outside these limits is not considered a fillet weld and shall be designed accordingly. 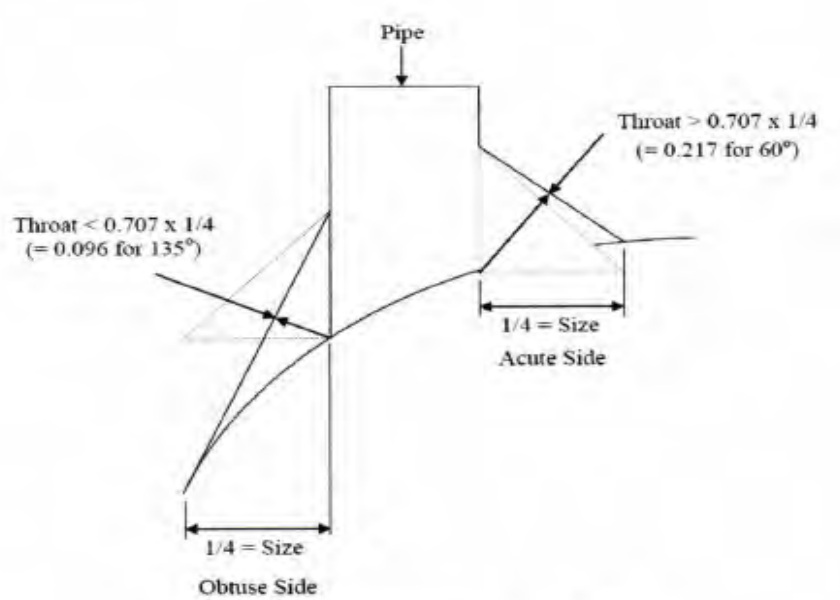 Off Set Nozzle Fillet Weld
7.3 Hydrotests	
7.3.1	If paint is specified, the vessel shall not be painted prior to the pressure test. Coating shall not be applied to external welds of items requiring leak/hydrostatic testing prior to testing.
7.3.2	All welds shall be sufficiently cleaned and free of scale or paint prior to hydrostatic testing.
7.3.3	Testing of vessels or components made of austenitic stainless steel materials shall be conducted with potable water containing no more than 50 PPM chloride.

Specification	Requirement
7.3.4	For vessels of low alloy steel, before application of the test pressure, the test water and the vessel material shall be allowed to equalize to approximately the same temperature. The temperature of the pressure resisting components during the pressure test, regardless of test media, shall be at least 30 °F warmer than the minimum design metal temperature to be stamped on the nameplate, but need not exceed 120 °F.
7.3.6	After completion of the hydrostatic test, the vessel shall be drained, dried, cleaned thoroughly inside and outside to remove grease, loose scale, rust, and dirt and closed as quickly as practicable. Test water shall not be in contact with austenitic stainless steel for more than 72 hours, unless treated with an appropriate biocide.
7.3.7	If field assembly or erection is involved, the final hydrostatic test shall be at the job site. The Seller or the field subcontractor shall provide the Buyer with a detailed test procedure for review and approval prior to testing.
7.3.8	A horizontal vessel shall be tested while resting on its support saddles without additional supports or cribbing.
7.3.9	Tall vertical vessels may be shop hydrotested in the horizontal position. The vessel shall be designed for vertical hydrotest loading. These vessel supports must be adequately designed to support the vessel (in accordance with the ASME code) during the hydrotest to prevent damage.
7.3.10	Each chamber of a multi-chamber vessel (jacketed vessel) shall be subject to a hydrotest pressure with atmospheric pressure in the adjacent chamber.
7.3.11	Parent vessels are in the Black Cell or Hard to Reach Areas. no hydrotest required for Pulse Jet Mixers and Charge Vessels.
7.3.12	Seller shall submit a hydrostatic test procedure in accordance with the requirements of Section 7.3 of this exhibit and ASME Section VIII, Division 1, Paragraph UG-99 for buyer review prior to use.
7.4 Leak Tests	
7.4.1	If gas or pneumatic testing is specified in the MDS, Drawings or in the purchase order, the Seller shall conduct the tests in accordance with ASME Section V. Seller shall submit a test procedure for Buyer review prior to use.
7.4.2	Reinforcing pad attachment welds and accessible surfaces of inside nozzle to vessel wall welds shall be tested for leaks with 15 PSIG dry air or nitrogen and bubble forming solution. This test shall be performed prior to the final hydrostatic or pneumatic test as applicable.
7.5 Obstruction Test	
7.5.1	Seller shall ensure and document that all internals, internal piping, and jacketing are free from obstructions.
7.6 Final Inspection of Completed Vessel	
7.6.1	Final inspection of the completed vessel shall be the sole responsibility of the Seller. The finished dimensions and cleanliness of the vessels shall comply with the relevant Drawings and specifications after completion of all tests.
8 Preparation and Shipment	
8.1 Cleaning	
8.1.1	Seller shall comply with 24590-WTP-3PS-G000-T0003.

Specification	Requirement
8.1.2	If specified in the purchase order and in any event following hot working or heat treatment, the equipment shall be descaled. The procedure to be used by Seller shall be submitted for Buyer's prior approval.
8.1.3	If blast (mechanical) descaling process is specified in the purchase order for stainless steel construction, clean and iron-free glass or ceramic beads, or sand of alumina or zirconia type shall be used. The type, grade, and chemical composition of the abrasive shall be submitted for Buyer's approval prior to its use. Recycling of abrasive is prohibited. Blast cleaning shall not be used on weld metal or as a final finish on fabrications.
8.2 Packaging	
8.2.2	All flanged openings, which are not provided with a cover, shall be protected by an ASME B16.5 or B16.47 carbon steel blind flange of the same rating as the flange, a full faced rubber gasket with a minimum thickness of 1/8 inch and carbon steel bolts with stainless steel washers.
8.2.3	For internal parts, suitable supports shall be provided to avoid damage during shipment. Temporary internal bracing shall be painted yellow and a label, located near the nameplate shall state that the vessel contains temporary bracing that must be removed.
8.2.4	Small parts, which are to be shipped loose, shall be bagged or boxed and marked with the order and plant item number of the vessel.
8.3 Shipping	
8.3.1	Seller shall take all necessary precautions in loading by blocking and bracing the vessel and furnishing all necessary material to prevent damage.
8.3.2	The Seller shall verify, by calculation, that the vessel and internals will withstand loads occurring during shipping for the chosen mode of transportation. The Buyer shall inform the Seller of the chosen mode of transportation
9 Documentation and Submittals	
9.2	Design calculations shall include relevant ASME Section VIII, Division I formulas, and source paragraphs, values used in the formulas, the calculated results, and comparison with acceptable values. Where calculations are based on other than the ASME Section VIII, Division I formulas, the source of the formulas shall be referenced. Where a computer program is used for calculations. a brief program description shall be given. including name and version of the program. If the program is not commercially available to industry, Seller shall maintain and provide, upon request, program documentation. Calculations shall include, but not be limited to: • Code calculations • Nozzle neck calculation per UG45, average primary stress Pm across the nozzle wall • Seismic calculations including base horizontal seismic force and moment and loads for anchorage and anchor bolt design • Support calculations including empty weight, operating weight and location of center of gravity • Calculations associated with lifting and erection of the vessel • Nozzle load analysis for local and gross effect, per Section 3.7 above, or by other approved method • Design of attachments, both internal and external • Thermal and discontinuity stresses as applicable

Specification	Requirement
	• Fatigue analysis as applicable for vessels in fatigue services
9.2.1	Seller shall submit an Outline drawing for each item. The Outline drawing shall include the following minimum for each item: • Shell and head thickness • Head type • Vessel empty weight, test weight and shipping weight • Center of Gravity • Lifting lugs and tailing lugs • Diameter, tangent-to-tangent dimensions and appropriate support details • Nozzle, flange support locations from datum point • Nozzle schedule with nozzle marks and service conditions • All appropriate design conditions, NDE and materials of construction • Foundation/Mounting details • Installations of appropriate internals
9.3	Seller shall make a complete set of Buyer approved drawings and other documents available to the Buyer's representative at the time the quality surveillance activities are being conducted.
9.4	All records pertaining to the nondestructive examination, base materials, filler materials, fabrication, and inspection shall be traceable to the area and part inspected and is accessible for Buyer's examination.
9.5	Seller shall provide ASME Section VIII, Division 1 data reports per ASME Section VIII Division 1, Paragraph UG-120.
9.6	Seller shall submit assembly drawings and shop detail drawings for buyer's review. These drawings shall include bill of materials, weld symbol, and NDE for each weld, and parts used in vessel construction. Assembly and shop detail drawings shall also include shell and head plate layout (including nozzles) for compliance with Section 5.2 of this exhibit.
9.7	Seller shall provide a detailed description of their work inspections and tests planned during the receipt of materials, manufacturing, testing, and conformance verification activities. This shall include identification of Bechtel and supplier witness and hold points.

Appendix A
Minimum Nozzle Design Loads

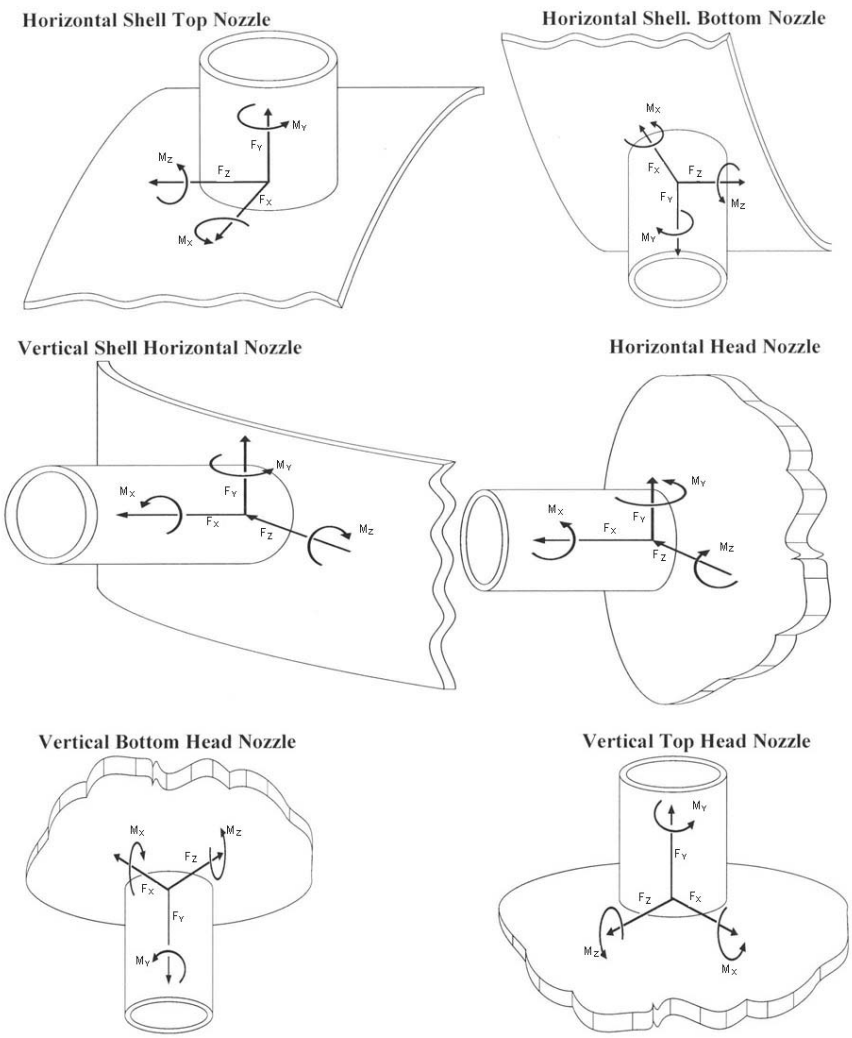

Table A2- Minimum Nozzle Loads Due to Stainless Steel Piping on Vessels Designated as SC-II, III, and IV

Pipe Size	Load Type	Forces			Moments		
		Fx (lb)	Fy (lb)	Fz (lb)	Mx (ft-lb)	My (ft-lb)	Mz (ft-lb)
1 in	Weight	10	16	10	11	7	7
	Seismic	66	44	66	92	137	137
	Thermal	28	24	38	38	77	77
1-1/2 in	Weight	20	32	20	26	16	16
	Seismic	138	92	138	228	342	342
	Thermal	58	52	78	96	192	192
2 in	Weight	34	56	34	46	29	29
	Seismic	244	162	244	398	597	597
	Thermal	104	92	138	169	337	337
3 in	Weight	71	113	71	180	112	112
	Seismic	491	327	491	1570	2350	2350
	Thermal	209	185	278	664	1330	1330
4 in	Weight	120	192	120	342	214	214
	Seismic	834	557	834	2960	4440	4440
	Thermal	356	317	474	1260	2520	2520
6 in	Weight	290	462	290	951	595	595
	Seismic	2025	1350	2025	8290	12400	12400
	Thermal	875	777	1170	3580	7160	7160
8 in	Weight	333	534	333	1210	758	758
	Seismic	2360	1580	2360	10700	16000	16000
	Thermal	1050	938	1410	4800	9590	9590
10 in	Weight	361	578	361	2210	1380	1380
	Seismic	2540	1690	2540	19400	29100	29100
	Thermal	1110	991	1490	8500	17000	17000
12 in	Weight	502	803	502	3240	2020	2020
	Seismic	3510	2340	3510	28100	42100	42100
	Thermal	1550	1380	2070	12400	24800	24800
14 in	Weight	591	946	591	3870	2420	2420
	Seismic	4160	2780	4160	33900	50900	50900
	Thermal	1850	1640	2460	15000	30100	30100
16 in	Weight	757	1210	757	5080	3180	3180
	Seismic	5310	3540	5310	44100	66100	66100
	Thermal	2380	2120	3180	19800	39500	39500
18 in	Weight	1200	1930	1200	8190	5120	5120
	Seismic	8490	5660	8490	71500	107000	107000
	Thermal	2990	2660	3980	25200	50300	50300
20 in	Weight	1280	2050	1280	8630	5400	5400
	Seismic	8910	5940	8910	75900	114000	114000
	Thermal	3660	3260	4880	31200	62400	62400
22 in	Weight	1380	2200	1380	9380	5860	5860
	Seismic	9510	6340	9510	81500	122000	122000
	Thermal	4420	3930	5900	37900	75800	75800
24 in	Weight	1600	2570	1600	11000	6870	6870
	Seismic	11100	7430	11100	96100	144000	144000
	Thermal	5240	4660	6990	45200	90400	90400

Note: Unless otherwise specified on the MDS utilize the minimum nozzle loads specified

Table A4- Minimum Nozzle Loads Due to Carbon Steel Piping on Vessels Designated as SC-II, III or IV

Pipe Size	Load Type	Forces			Moments		
		Fx (lb)	Fy (lb)	Fz (lb)	Mx (ft-lb)	My (ft-lb)	Mz (ft-lb)
1 in	Weight	10	16	10	13	8	8
	Seismic	68	46	68	110	166	166
	Thermal	32	30	44	53	106	106
1-1/2 in	Weight	20	32	20	31	20	20
	Seismic	140	92	140	275	412	412
	Thermal	68	60	90	132	265	265
2 in	Weight	34	54	34	55	34	34
	Seismic	234	156	234	480	721	721
	Thermal	114	100	150	232	465	465
3 in	Weight	62	99	62	176	110	110
	Seismic	482	321	482	1910	2870	2870
	Thermal	231	206	308	915	1830	1830
4 in	Weight	104	167	104	335	209	209
	Seismic	804	536	804	3610	5420	5420
	Thermal	387	344	516	1740	3480	3480
6 in	Weight	243	389	243	949	593	593
	Seismic	1860	1250	1860	10200	15200	15200
	Thermal	906	806	1210	4930	9870	9870
8 in	Weight	353	564	353	1450	903	903
	Seismic	2690	1800	2690	13400	20200	20200
	Thermal	1320	1180	1770	6610	13200	13200
10 in	Weight	384	615	384	2600	1630	1630
	Seismic	2920	1950	2920	23700	35600	35600
	Thermal	1450	1290	1930	11700	23400	23400
12 in	Weight	567	908	567	4150	2590	2590
	Seismic	4310	2880	4310	37100	55600	55600
	Thermal	2140	1910	2860	18400	36800	36800
14 in	Weight	707	1130	707	5400	3380	3380
	Seismic	5380	3590	5380	48100	72200	72200
	Thermal	2670	2380	3570	23900	47900	47900
16 in	Weight	980	1570	980	8040	5020	5020
	Seismic	7450	4970	7450	71900	108000	108000
	Thermal	3700	3290	4940	35800	71500	71500
18 in	Weight	1300	2080	1300	11300	7090	7090
	Seismic	9890	6590	9890	102000	152000	152000
	Thermal	4950	4400	6600	50900	102000	102000
20 in	Weight	1640	2630	1640	14900	9330	9330
	Seismic	12500	8320	12500	132000	198000	198000
	Thermal	6300	5600	8400	66500	133000	133000
22 in	Weight	1900	3040	1900	15400	9620	9620
	Seismic	14400	9610	14400	135000	203000	203000
	Thermal	7330	6520	9770	68800	138000	138000
24 in	Weight	2510	4020	2510	24800	15500	15500
	Seismic	19000	12700	19000	217000	326000	326000
	Thermal	9760	8680	13000	111000	222000	222000

Note: Unless otherwise specified on the MDS utilize the minimum nozzle loads specified

EXHIBIT 7 | SEISMIC QUALIFICATION CRITERIA FOR PRESSURE VESSELS

Specification 24590-WTP-3PS-MV00-T0002, REVISION 3 was used as applicable to create the following exhibit.

Note: All References on this exhibit are inclusive to this exhibit only.

Specification	**Requirement**
1. Scope	
1.1	This exhibit covers pressure vessel seismic analysis criteria and supplements the requirements of the exhibits listed in Section 2.3.
1.2	This document shall be used by the vessel equipment designer.
2 Applicable Documents	
2.2 Codes and Industry Standards	
2.2.1	American Society of Mechanical Engineers, Boiler and Pressure Vessel Code
2.2.1.1	ASME Section VIII, Division l, "Rules for Construction of Pressure Vessels"
2.2.1.2	ASME Section VIII, Division 2, Rules for Construction of Pressure Vessels - Alternative Rules, American Society of Mechanical Engineers (Note: Code year not later than 2004 Edition with 2005 and 2006 Addenda). Linearization of Stress Results for Stress Analysis (ASME VIII Div 2, Annex 5.A, 2007 Edition, no Addenda)
2.2.1.3	ASME Section II, Part D, "Properties"
2.2.2	UBC, 1997 Uniform Building Code
2.2.3	AISC MO 16, ASD Manual, of Steel Construction, "9th Edition, American Institute of Steel Construction
2.2.4	DOE-STD-1020-94, Department of Energy, "Natural Phenomena Hazards Design and Evaluation for the Department of Energy Facilities", including change notice dated January 1996
2.2.5	ASME B31.3, Process Piping, 1996, American Society of Mechanical Engineers
2.3 Project Documents	
2.3.2	Exhibit 2 of 24590-BOF-3PS-MVSC-T0003, *Structural Design Loads for Seismic Category IV Equipment and Tanks*
2.3.3	Exhibit 6 of 24590-BOF-3PS-MVSC-T0003, *Pressure Vessel Design and Fabrication*
3 Abbreviations and Definitions	EQD — Equipment Qualification Data Sheet MDS — Mechanical Data Sheet NPH — Natural Phenomena Hazard Performance Category — Per DOE-STD-1020-94, each SSC is assigned a NPH Performance Category ranging from PC-0 through PC-4 RPP-WTP — River Protection Project - Waste Treatment Plant SC — Seismic Category

Specification	**Requirement**
	SC-I, II, III, IV — Specifies the required seismic category of an equipment item. Refer to Exhibit 2 for a more detailed explanation. Seismic Loading — Seismic loading is defined in terms of a site-specified design response spectrum, also referred to as Design Basis Earthquake (DBE), or specified for the site by Uniform Building Code (UBC) SSC — Structures, Systems and Components
5 Buyer's Responsibilities	
5.2	The Buyer provides the Seismic Response Spectra where necessary to perform the seismic analysis.
6 Seller's Responsibilities	
6.1	The Seller is responsible for the seismic analysis of the vessels according to the assigned Seismic Category. The Seller shall ensure that stresses in the vessel do not exceed those allowed, as defined in Section 7.4 for the vessel proper and reference 2.3.3 for the vessel supports, for the required loads and combinations thereof.
6.2	Depending on the Seismic Category of the vessel and its internal components, a finite element analysis may be required to determine the vessel stresses when subjected to operating and seismic loading. The software and implementation used for the analysis shall be in accordance with the quality assurance requirements defined in the purchase order.
6.3	The Seller shall obtain approval from the Buyer before nominating others to perform the design services.
7 Design Requirements	
7.1 Seismic Category	
7.1.1	The RPP-WTP Structures, Systems, and Components (SSC) are categorized as SC-I, II, III, or IV. The SC level is based upon the contents and the required functionality of the SSC following a seismic event. The Seismic Category defines the applicable analysis method and the acceptance criteria.
7.1.2	Seismic loading shall not be considered when performing the primary plus secondary stress range analysis required by Section VIII, Division 2, Appendix 4. In addition, seismic loading shall not be considered when performing a fatigue analysis required by Section VIII, Division 2, Appendix 5.
7.1.3	As indicated in UG-23(c), seismic loads are combined with normal operating loads when applying the factor of 1.2 to the allowable stress. Seismic loading and wind loading or Multiple Overblow need not be considered to act simultaneously.

Specification	Requirement
7.1.4	NPH Performance Categories for each SSC are assigned using criteria specified in DOE-STD-1020-94, and range from PC-0 through PC-4 depending on overall risk of the facility operation and the assigned function to the SSC. The following table summarizes the descriptions of the NPH Performance Categories as defined in DOE-STD-1020-94 and the correlation to Seismic Category:

Performance Category	Performance Goal Description	RPP-WTP Seismic Category (SC)
PC-0	No safety, mission, or cost considerations	SC-V
PC-1	Maintain occupant safety	SC-IV
PC-2	Occupant safety, continued operation with minimum interruption.	SC-III
PC-3	Occupant safety, continued operation, hazard confinement.	SC-II or SC-I
PC-4	Occupant safety, continued operation, confidence of hazard confinement.	Not required for this project

7.2 Design Code	
7.2.1	The governing design code for the vessel proper is ASME Section VIII, Division l. The loadings to be considered in designing the vessel shall include those listed in paragraph UG-22 of the code.
7.2.2	The governing design code for the vessel supports is as per Exhibit 6 of 24590-BOF-3PS-MVSC-T0003, *Pressure Vessel Design and Fabrication*.
7.3 Seismic Analysis	
7.3.1	Internal components, supports, and piping systems shall be analyzed the same as the parent vessel unless otherwise noted. Requirements for internal piping and supports are provided in Reference 2.3.3.
7.3.3	The seismic loads for SC-III and SC-IV vessels shall be determined according to Exhibit 2 of 24590-BOF-3PS-MVSC-T0003. Factors for UBC equations are given in Section 4.0 of that exhibit.
7.3.5	The seismic analysis of SC-III and SC-IV vessels and their supports shall be performed in accordance with specification Exhibit 2 of 24590-BOF-3PS-MVSC-T0003 and Exhibit 6 of 24590-BOF-3PS-MVSC-T0003.
7.4 Maximum Allowable Stresses and Acceptance Criteria for the Vessel Proper	
7.4.1	Maximum Allowable Tensile Stress - The maximum allowable tensile stress, S, for the material of construction of the vessel shall be as specified in ASME Section II, Part D, and Subpart 1 .

Specification	Requirement
7.4.2	Maximum Allowable Longitudinal Compressive Stress - The maximum allowable longitudinal compressive stress used in the vessel design shall meet the requirements of paragraph UG-23(b) of the ASME Section VIII, Division 1.
7.4.3	Maximum General Primary Membrane Stress - The wall thickness of a vessel shall be determined such that the induced maximum general primary membrane stress does not exceed the maximum allowable stress in tension for any combination of loadings listed in paragraph UG-22 of ASME Section VIII, Division 1 that induce primary stresses and are expected to occur simultaneously during normal operation of the vessel.
7.4.4	Combined Primary Membrane plus Primary Bending Stress - The combination of loads as discussed in Section 7.4.3 shall not induce a combined maximum primary membrane stress plus primary bending stress across the vessel wall thickness, that exceeds 1.5 times the maximum allowable stress value in tension.
7.4.5	Combination of Seismic Loadings with Other Loadings - For the combination of seismic loading with other loadings in UG-22, the wall thickness of a vessel shall be determined such that the general primary membrane stress shall not exceed 1.2 times the permitted maximum allowable stress, as defined in 7.4.1, 7.4.2, 7.4.3 or 7.4.4. Seismic loading and wind loading or Multiple Overblow need not be considered to act simultaneously. As indicated in UG-23(c), seismic loads are combined with normal operating loads when applying the factor of 1.2 to the allowable stress. Note that ASME Section VIII, Division l, UG-23(d) is silent relative to any stresses other than General Primary Membrane, i.e., it does not address the same types of stresses (Local Primary Membrane, Primary Membrane plus Primary Bending) in the detail addressed in Section VIII, Division 2. Local Primary Membrane stress is discussed in ASME Section VIII, Division 2, Paragraph AD-140(c) and is limited to $1.5kS_m$, as is Primary Bending stress (AD-140(d)). Table AD-150.1 of ASME Section VIII, Division 2, then provides guidance for "k" under Design and other conditions. In accordance with that Table and in accordance with the commitment to use S vs. S_m, a factor of 1.2 times the permitted allowable stress in 7.44 above shall be used for Local Primary Membrane or Primary Bending evaluations that include seismic loading (i.e., 1.2 x 1.5 x S).
7.4.8	The acceptance criteria for non-safety vessels shall be in accordance with ASME Section VIII, Division 1, using the allowable stress, S, from ASME Section VIII, Division 1.

EXHIBIT 8 | TECHNICAL SUPPLY CONDITIONS FOR PIPE, FITTINGS, AND FLANGES

Specification 24590-WTP-3PS-PB01-T0001, REVISION 9 was used as applicable to create the following exhibit.

Note: All References on this exhibit are inclusive to this exhibit only.

Specification	Requirement
1 Scope	
1.1	This document specifies the minimum requirements governing the supply of metallic pipe, fittings, and flanges for piping in accordance with ASME B31.3 - 1996, Process Piping. This document is not applicable for temporary or non-permanent plant installation. The term pipe and related requirements listed in this exhibit are applicable to stainless steel tube.
1.2	This exhibit shall be applicable to all material requisitions or purchase order packages for pipe, fittings, and flanges purchased in accordance with the requirements of the referenced Codes and Standards specified below, unless technical and quality requirements are specified on other approved engineering documents.
2 Code, Standards & References	
2.1	ASME B31.3 - 1996, Process Piping, is the piping code for the WTP Project. ASME materials, identified in ASME Boiler & Pressure Vessel Code, Section II Material Specifications, as being identical to the ASTM Material Specifications, for the edition year listed below, alloy, type and / or grade, (if applicable), are acceptable for use. When using ASTM material specifications for commercial material (CM) items, any version more recent than the ASTM version referenced in ASME B31.3 - 1996 Appendix E, is acceptable. A SDDR is not required for these CM item ASTM material specification edition changes. **ASME Standards** ASME B16.5 — 1988 — 2009 — Pipe Flanges and Flanged Fittings NPS 1/2 Through NPS 24 Metric/Inches ASME B16.9 — 1986 — 2007 — Factory-Made Wrought Buttwelding Fittings ** ASME B16.11 — 1991 — 2009 — Forged Fittings, Socket-Welding and Threaded ASME B16.25 — 1986 — --- — Buttwelding Ends ASME B16.28 — 1986 — --- — Wrought Steel Buttwelding Short Radius Elbows and Returns ASME B16.36 — 1988 — 2009 — Orifice Flanges ASME B16.47 — 1990 — --- — Large Diameter Steel Flanges NPS 26 through NPS 60 ASME B36.10M — 1985 — --- — Welded and Seamless Wrought Steel Pipe ASME B36.19M — 1985 — --- — Stainless Steel Pipe ASME B1.20.1 — 1983 — --- — Pipe Threads, General Purpose (Inch) ** SR ells are now supplied in accordance with ASME B16.9 and are acceptable. ASME B16.28 is replaced by ASME B16.9.

	ASME B31.3, - 1996 edition, Appendix E listed Standard and Edition Date	Acceptable Later Standard Edition Dated Through	
ASME B16.5	1988	2009	Pipe Flanges and Flanged Fittings NPS 1/2 Through NPS 24 Metric/Inches
ASME B16.9	1986	2007	Factory-Made Wrought Buttwelding Fittings **
ASME B16.11	1991	2009	Forged Fittings, Socket-Welding and Threaded
ASME B16.25	1986	---	Buttwelding Ends
ASME B16.28	1986	---	Wrought Steel Buttwelding Short Radius Elbows and Returns
ASME B16.36	1988	2009	Orifice Flanges
ASME B16.47	1990	---	Large Diameter Steel Flanges NPS 26 through NPS 60
ASME B36.10M	1985	---	Welded and Seamless Wrought Steel Pipe
ASME B36.19M	1985	---	Stainless Steel Pipe
ASME B1.20.1	1983	---	Pipe Threads, General Purpose (Inch)

Specification	Requirement

American Society for Testing and Materials (ASTM) Material Specifications

	ASME B31.3, - 1996 edition, Appendix E listed Standard and Edition Date	Acceptable Alternate Versions Dated Through	
ASTM A36	1993a	2008	Standard Specification for Carbon Structural Steel
ASTM A53	1993a	2010	Standard Specification for Pipe, Steel, Black and Hot-Dipped, Zinc-Coated, Welded and Seamless
ASTM A105	1993b	2010a	Standard Specification for Carbon Steel Forgings for Piping Applications
ASTM A106	1993	2010	Standard Specification for Seamless Carbon Steel Pipe for High-Temperature Service
ASTM A182	1993b	2010a	Standard Specification for Forged or Rolled Alloy and Stainless Steel Pipe Flanges, Forged Fittings, and Valves and Parts for High-Temperature Services
ASTM A234	1992a	2011	Standard Specification for Piping Fittings of Wrought Carbon Steel and Alloy Steel for Moderate and High Temperature Service
ASTM A240	1993b	2011	Standard Specification for Chromium and Chromium-Nickel Stainless Steel Plate, Sheet, and Strip for Pressure Vessels and for General Applications
ASTM A269	1992	2010	Standard Specification for Seamless and Welded Austenitic Stainless Steel Tubing for General Service

Specification	Requirement

American Society for Testing and Materials (ASTM) Material Specifications

	ASME B31.3, - 1996 edition, Appendix E listed Standard and Edition Date	Acceptable Alternate Versions Dated Through	
ASTM A276	1992	2010	Standard Specification for Stainless Steel Bars and Shapes
ASTM A312	1993	2011	Standard Specification for Seamless, Welded, and Heavily Cold Worked Austenitic Stainless Steel Pipes
ASTM A333	1991a	2011	Standard Specification for Standard Specification for Seamless and Welded Steel Pipe for Low-Temperature Service
ASTM A335	1992b	---	Standard Specification for Seamless Ferritic Alloy-Steel Pipe for High-Temperature Service
ASTM A350	1993	2010	Standard Specification for Carbon and Low-Alloy Steel Forgings, Requiring Notch Toughness Testing for Piping Components
ASTM A351	1991b	2010	Standard Specification for Castings, Austenitic, Austenitic-Ferritic (Duplex), for Pressure-Containing Parts
ASTM A352	1989	---	Standard Specification for Steel Castings, Ferritic and Martensitic, for Pressure-Containing Parts, Suitable for Low-Temperature Service
ASTM A370	1992	2009a	Standard Test Methods and Definitions for Mechanical Testing of Steel Products
ASTM A403	1993	2010	Standard Specification for Wrought Austenitic Stainless Steel Piping Fittings
ASTM A420	1992	2010a	Standard Specification for Piping Fittings of Wrought Carbon Steel and Alloy Steel for Low-Temperature Service
ASTM B62	1993	---	Standard Specification for Composition Bronze or Ounce Metal Castings
ASTM B337	1983(R1987)	---	Standard Specification for Seamless and Welded Titanium and Titanium Alloy Pipe
ASTM B363	1983 (R1987)	---	Standard Specification for Seamless and Welded Unalloyed Titanium and Titanium Alloy Welding Fittings
ASTM B366	1991	2010	Standard Specification for Factory-Made Wrought Nickel and Nickel Alloy Fittings
ASTM B381	1993	2010	Standard Specification for Titanium and Titanium Alloy Forgings

Specification	Requirement

American Society for Testing and Materials (ASTM) Material Specifications

	ASME B31.3, - 1996 edition, Appendix E listed Standard and Edition Date	Acceptable Alternate Versions Dated Through	
ASTM B444	1990	2006	Standard Specification for Nickel-Chromium-Molybdenum-Columbium Alloys (UNS N06625) Pipe and Tube
ASTM B462	1993	2010	Standard Specification for Forged or Rolled UNS N08020, UNS N08024, UNS N08026, UNS N08367, and UNS R20033 Alloy Pipe Flanges, Forged Fittings, and Valves and Parts for Corrosive High-Temperature Service
ASTM B564	1993	2010	Standard Specification for Nickel Alloy Forgings
ASTM B575	1992	2010	Standard Specification for Low-Carbon Nickel-Chromium-Molybdenum, Low-Carbon Nickel-Chromium-Molybdenum-Copper, Low-Carbon Nickel-Chromium-Molybdenum- Tantalum, and Low-Carbon Nickel-Chromium-Molybdenum-Tungsten Alloy Plate, Sheet, and Strip,
ASTM B584	1993b	---	Standard Specification for Copper Alloy Sand Castings for General Applications
ASTM B619	1992	2010	Standard Specification for Welded Nickel and Nickel-Cobalt
			Alloy Pipe
ASTM B675	1990a	2002, R-2007	Standard Specification for UNS N08366 and N08367 Welded Pipe
ASTM B688	1993	1996 (R2009)	Standard Specification for Chromium-Nickel-Molybdenum-Iron (UNS N08366 and UNS N08367) Plate, Sheet, and Strip
ASTM B861	Not Listed	2010	Standard Specification for Titanium and Titanium Alloy Seamless Pipe
ASTM E10	Not Listed	2010	Standard Test Method for Brinnel Hardness of Metallic Materials
ASTM E18	Not Listed	2008b	Standard Test Methods for Rockwell Hardness of Metallic Materials
ASTM E797	Not Listed	2005	Standard Practice for Measuring Thickness by Manual Ultrasonic Pulse-Echo Contact Method

Manufacturers Standardization Society (MSS)

MSS SP-25	1978 (R1988)	---	Standard Marking System for Valves, Fittings, Flanges and Unions

Specification	Requirement
	Manufacturers Standardization Society (MSS) MSS-SP-79 — 1992 — 2009 — Socket Welding Reducer Inserts MSS SP-83 — 1987 — 2006 — Class 3000 Steel Pipe Unions Socket Welding and Threaded MSS SP-95 — 1986 (R1991) — 2006 — Swage(d) Nipples and Bull Plugs MSS SP-97 — 1987 — 2006 — Integrally Reinforced Forged Branch Outlet Fittings - Socket Welding, Threaded and Buttwelding Ends **American Petroleum Institute** API 5L — Nov. 1, 1992 — ----- — Specification for Line Pipe Fortieth Edition
2.2 General Specifications	Exhibit 5 of 24590-BOF-3PS-MVSC-T0003, *Shop Fabrication of Piping* Exhibit 1 of 24590-BOF-3PS-MVSC-T0003, *Positive Material Identification (PMI) for Shop Fabrication* 24590-WTP-3PS-G000-T0003, *Packaging, Handling, and Storage Requirements*
5 Material	
5.2	Except as otherwise specified in purchasing documents, all materials shall be new and shall be traceable to their Material Test Report (MTR).
5.3	All threaded pipe, fittings, and flanges shall be supplied with threads in accordance with ASME B1.20.1. Threaded galvanized pipe, fittings, and flanges shall be supplied with threads free of galvanizing. Couplings ordered with threaded pipe shall be screwed on "handling-tight" as described in Paragraph 7.2 of API 5L.
5.4	Seamless pipe and fittings, if available, are preferred in all cases. Welded pipe and fittings are an acceptable substitute for seamless pipe and fittings only per Buyer approved SDDR unless already noted below. As required by the ASTM material standard the NDE results shall be shown on the applicable material test report that is supplied with the material. For RT the acceptance criteria shall be per UW-51 of ASME Boiler & Pressure vessel Code Section VIII, Division 1. For UT the acceptance criteria for single longitudinal seam welds shall be per UW-53 of ASME Boiler & Pressure Vessel Code Section VIII, Division l. There are no procedure submittal requirements for NDE performed by material manufacturers of pipe and fittings manufactured in accordance with a standard listed in ASME B31.3 Table A-1 or Table 326.1 Where these longitudinal seam weld examinations have not been performed as required by the material manufacturer, the Supplier shall perform the examinations in accordance with the above paragraphs, including the following; • The Supplier RT and/or UT procedures used for the above examinations shall be submitted for Buyer's review and permission to proceed. • The results of these Supplier performed examinations shall be included in the material documentation package.
5.5	Orifice flanges shall be supplied in pairs complete with jackscrews and plugs, but without bolts, gaskets, or orifice plates.

Specification	Requirement
5.6	To ensure material is correctly supplied as specified, the Seller shall perform Positive Material Identification (PMI) tests in accordance with Specification Exhibit 1 of 24590-BOF-3PS-MVSC-T0003. The Seller shall submit their PMI test procedure for Buyer's review and permission to proceed. Note that PMI is not applicable for carbon steel, and titanium materials.
5.8	The following are approved alternate materials per this exhibit:
5.8.1	Where material is specified as triple stamped, seamless A106/A53/API 5L Grade B, the following single stamped materials are acceptable: a) A106 Grade B b) Seamless A53 Grade B c) Seamless API 5L Grade B
5.8.2	Where material is specified as double stamped, seamwelded A53/API 5L Grade B, the following single and triple stamped materials are acceptable: a) Seamwelded A53 Grade B b) Seamwelded API 5L Grade B c) Seamless A53/A106/API 5LGrade B
5.8.3	Where material is specified as dual grade Type 316/316L stainless steel, a single grade Type 316L is acceptable.
5.8.4	Where material is specified as dual grade Type 304/304L stainless steel, a single grade Type 304L is acceptable.
5.8.5	Where Buyer's purchase order description specifies pipe to be furnished "Bevelled Both Ends", pipe furnished with "Plain Ends" is acceptable.
5.8.6	Where Buyer's purchase order description specifies pipe to be furnished "Double Random Lengths", pipe furnished in "Single Random Lengths" is acceptable unless otherwise noted.
5.8.7	Where ASTM B675, N08367 Class 1 pipe with hydrostatic test is specified, ASTM B675, N08367 Class 2 pipe with hydrostatic test is acceptable.
5.8.8	Where ASTM A536 Ductile Iron is specified for groove end fittings, Malleable Iron or Carbon steel are also acceptable consistent with the manufacturer's standard offerings.
5.8.9	External rust staining of austenitic stainless steel and nickel alloys due to contact with carbon steel is acceptable. This applies to bulk piping materials and not to shop fabricated spools.
5.8.10	Where ASTM B619 UNS N06022 Class I pipe is specified, ASTM B619 UNS N06022 Class II is acceptable.
5.8.11	Double Submerged-Arc Welded (DSAW) API 5L Grade B is acceptable in lieu of Electric Resistance Welded (ERW) API 5L Grade B for all pipe sizes larger than NPS 24.
5.8.12	For stainless steel floor drains only, ASTM A351 Grade CF8M is an acceptable substitute for ASTM A351 Grade CF3M.
5.8.13	Where ASTM A53 Grade B is specified, ASTM A106 Grade B is an acceptable alternate for NPS 2 and smaller.
5.8.14	Galvanizing of ASTM A106 Grade B shall be per ASTM A153 and/or ASTM A123.
5.8.15	Where malleable iron per ASTM A197 is specified for threaded pipe plugs, ASTM A126 solid cast iron plugs are an acceptable alternate.
5.8.16	Taper boring of standard schedule 40S butt weld reducing fittings, per ASME B16.25, is permitted where NPS 4 and smaller schedule 40S piping transitions to NPS 6 and larger schedule 10S piping. The applicable fitting MTRs shall be annotated accordingly.
5.8.18	ASTM B584, UNS C84400 and C83600, is an acceptable alternate material where ASTM B62 is specified in the stock code description for flanges or fittings.

Specification	Requirement
5.8.19	Where ASTM B366 grades WP6XN, WP6XN-W, or WP6XN-WX are specified in the stock code descriptions for swages manufactured to the requirements of MSS SP-95, ASTM B366 grade CR6XN seamless shall be used.
5.8.20	Where ASTM B366 grades WPHC22-S, WPHC22-W, or WPHC22-WX are specified in the stock code descriptions for swages manufactured to the requirements of MSS SP-95, ASTM B366 material grade CRHC22 seamless shall be used.
5.8.22	4" pipe size and smaller fittings, and swages marked as ASTM A403 and/or A182 with the same Grade/Type markings are acceptable for use on Piping Isometrics. No Piping Isometric bill of material change is required.
5.8.23	MSS SP-25, Standard Marking System for Valves, Fittings, Flanges and Unions, provides the material marking requirements for pipe, fittings, flanges, and unions.
5.8.24	Please note that certain ASTM standards (e.g., A312) list specific available lengths and do not use the terms "Double Random Lengths" or "Single Random Lengths". The lengths specified in the ASTM standard are to be used in those cases.
5.8.25	Stainless steel tubing shall be solution annealed seamless tube supplied in accordance with ASTM Standard A269 Type 316L requirements. Seam welded solution annealed A269 Type 316L tube is not acceptable.
5.8.26	If purchase order calls out a specific item pipe length (e.g. 20 ft.), it is meant as a nominal length for a single random length or a double random length, as applicable.
5.8.29	4" pipe size and smaller fittings, and swages marked as ASTM A234 and/or A105 with the same Grade/Type markings are acceptable for use on Piping Isometrics. No Piping Isometric bill of material change is required.
6 Identification Marking Requirements	
6.1	All materials shall be marked with the information required by the applicable ASTM or ASME material specification. Marking shall be done by any permanent method that will neither result in harmful contamination or sharp discontinuities, nor infringe upon the minimum wall thickness. Any marking material and packing tape used on stainless steel are required to be made from low chloride (less than 200 ppm) and low sulfur (less than 400 ppm) type material. Fabricator shall provide a chemical analysis report of the marker/tape for each lot or typical product sample. It is acceptable to use a rounded, low stress, vibro-etch tool for this marking.
6.2	Pipe, fittings, and flanges shall be color coded if specified in the material requisition.
6.4	Fittings, flanges, and unions are marked in accordance with the applicable ASTM material specification requirements, including MSS-SP-25, Standard Marking System for Valves, Fittings, Flanges and Unions. This includes the omission of marking information because of small fitting, flange or union size or configuration limitations. This may require special tagging and packaging requirements in order to properly match and control the small fitting, flange, or union to the Material Certification requirements listed in Section 8.
8 Certification	All carbon steel, stainless steel, steel alloys, and titanium materials shall have a heat number that is traceable to the Material Test Report (MTR) produced by the material manufacturer. MTRs shall include, as a minimum, all data required by the applicable material specification (e.g., chemical analysis, mechanical properties, heat treatment statement, nondestructive test results, hydrostatic test results, as applicable, and heat number). A material Certificate of Compliance shall be provided for all other materials. MTRs or Certificate of Compliance for all materials, as applicable, shall be included with

Specification	Requirement
	the shipment of the materials. The Material Certificate of Compliance (C of C) shall contain the following information: a) Buyer purchase order number b) Buyer purchase order item number c) Buyer stock code number d) Manufacturer's name e) The C of C identifies the specific procurement requirements met by the purchased material, equipment, or service (i.e. codes, standards, and other specifications) f) Any approved changes, waivers, or deviations applicable to the material, service, or equipment (SDDRs). g) The C of C shall be signed or authenticated by an authorized Supplier representative.
10 Configuration Management	Configuration Management is maintained by conformance to approved drawings and procedures. If approved procedures and drawings cannot be followed, Engineering shall be promptly notified.

EXHIBIT 9 | DEP-VSL-00004A/B REFINED NOZZLE LOADS

CCN 298623

NOZZLE DESIGN LOADS

Nozzle Number	Orientation	Load Case	Design Loads (Force in lbs, Moment in ft-lb)					
			Fa	Fb	Fc	Ma	Mb	Mc
N03	VERTICAL	Weight	200	50	50	50	50	250
		Seismic	300	150	150	250	250	950
		Thermal	200	100	100	200	200	400
		W + S	500	200	200	300	300	1200
		W + S + T	700	300	300	500	500	1600
N04	VERTICAL	Weight	120	50	50	50	50	50
		Seismic	380	150	150	250	250	1150
		Thermal	200	100	100	200	200	400
		W + S	500	200	200	300	300	1200
		W + S + T	700	300	300	500	500	1600
N05	HORIZONTAL	Weight	50	200	50	300	50	400
		Seismic	550	300	450	900	1150	800
		Thermal	200	300	300	400	400	400
		W + S	600	500	500	1200	1200	1200
		W + S + T	800	800	800	1600	1600	1600
N09	VERTICAL	Weight	300	50	50	50	50	600
		Seismic	200	150	150	250	250	600
		Thermal	200	100	100	200	200	400
		W + S	500	200	200	300	300	1200
		W + S + T	700	300	300	500	500	1600
N10	HORIZONTAL	Weight	300	1400	100	100	50	1300
		Seismic	1200	700	1400	2400	2450	1200
		Thermal	1000	400	1000	1000	1000	1000
		W + S	1500	2100	1500	2500	2500	2500
		W + S + T	2500	2500	2500	3500	3500	3500
N11	HORIZONTAL	Weight	100	200	100	100	100	100
		Seismic	900	800	900	1400	1400	1400
		Thermal	1000	1000	1000	500	500	500
		W + S	1000	1000	1000	1500	1500	1500
		W + S + T	2000	2000	2000	2000	2000	2000

General Notes:
1) Horizontal nozzle: loads are in local coordinates (a = Axial, b = Vertical, c = Lateral)
2) Vertical nozzle: loads are in local coordinates (a = Vertical, b = East/West, c = North/South)
3) Loads and Moments are based on actual operating temperature therefore, further thermal reduction does not apply.
4) Load Case W + S = Weight + Seismic , W + S + T = Weight + Seismic + Thermal

RIVER PROTECTION PROJECT – WASTE TREATMENT PLANT

ENGINEERING SPECIFICATION

FOR

DVP HEPA Filter Preheater

Content applicable to ALARA? ☒ Yes ☐ No

ADR No.
24590-BOF-ADR-M-16-0004

Rev
1

Specification changes retroactive? ☒ Yes ☐ No
☐ N/A (alpha revision or revision 0)

Retroactive applicability: All changes in this revision are to be incorporated by the SELLER into equipment design and fabrication for all items on the purchase order.

NOTE: Contents of this document are Dangerous Waste Permit affecting.

Quality Level
CM
DOE Contract No. DE-AC27-01RV14136

REV	DATE	BY	CHECK	AUTHORIZATION	APPROVER *
2	5-23-18	Originator By: Thang E. Thawn - tethawn Org Name: Bechtel Placed: May 22, 2018 Thang Thawn	Checked By: Jung Shin - jwshin1 Org Name: Bechtel National Inc. Placed: May 22, 2018 Jung Shin	N/A	Approved By: Youssef Mohammad-Zadeh - ymohammad Org Name: Bechtel Placed: May 23, 2018 Y. Mohammad-Zadeh Sarah Barker
1	03-06-2017	Robert Preston	Sang Ip	N/A	Y. Mohammad-Zadeh Julian Leam
0	06-01-2016	David Holmes	Robert Preston	N/A	Y. Mohammad-Zadeh Julian Leam

Reviewed No Comments ☑
By: Jerid Mauss - jrmauss
Org Name: Bechtel
Placed: May 22, 2018

SPECIFICATION No.
24590-BOF-3PS-MEE0-T0002

Rev
2

*The designated procedure subject matter expert (SME) for 24590-WTP-3DP-G04B-00049, *Engineering Specifications*, will concur with the retroactive determination and retroactive applicability details for all Specification Change Notices. Designated procedure SME Concurrence is documented by the initials of the SME in or by the Approval box. See CCN 263771 for details.

Revision History

Revision	Reason for Revision	Q Specification Revision Only Margin Reduced?		CM Only
		YES	NO	N/A
0	Innitial Issue	N/A	N/A	N/A
1	- Issued for Purchase. - Incoporates EIE 24590-WTP-EIE-MS-16-0036 which requires no action for in progress procurements. (Enginnering has confirmed that the revision 4 to Specification 24590-WTP-3PS-MVB2-T0001 makes no technical changes that would effect this equipment.) - Conformed to SELLER's offering. (Incoporated Addendums 1 thru 3) which does not reduce any margins. - Both heaters and their individual controls mounted on a single skid. - Removed Exhibit 7: Pressure Vessel Fatigue Analysis. - Added Exhibit 8: Instrumentation for Packaged Systems to cover technical requirements that need to be met for control panels. - Exhibit 1 was revised to include technical requirements that need to be met for control panels. - Deleted the thermal analysis (Section 3.8) - Added section 7.4, Painting.	☐	☒	☐
2	Issued for incorporation of Design Change Document and minor editorials. - Incorporated SCN: 24590-BOF-3PN-MEE0-00005 - Added definitions for C of C in Sections 1.4.2. - Minor editorial chnages. - Added Section 11 to include all Design Changes Incorporation by Reference SDDR. There are no EIEs against this document.	☐	☐	☒
		☐	☐	☐

Notice

Please note that source, special nuclear, and byproduct materials, as defined in the Atomic Energy Act of 1954 (AEA), are regulated at the US Department of Energy (DOE) facilities exclusively by DOE acting pursuant to its AEA authority. DOE asserts, that pursuant to the AEA, it has sole and exclusive responsibility and authority to regulate source, special nuclear, and byproduct materials at DOE-owned nuclear facilities. Information contained herein on radionuclides is provided for process description purposes only.

Contents

1 Scope 1
1.1 Project Description and Location 1
1.2 Equipment, Material, and Services Required 1
1.3 Work by Others 2
1.4 Acronyms, Abbreviations and Definitions 2
1.5 Quality Level 4
1.6 Seismic Category 4
2 Applicable Documents 4
2.1 General 4
2.2 Codes and Standards 4
2.3 Reference Documents/Drawings 5
3 Design Requirements 5
3.1 Basic Function 5
3.2 Performance 5
3.3 Preheater Design 6
3.4 Environmental Conditions 6
3.5 Loading 7
3.6 Electrical Requirements 7
3.7 Instrumentation and Control Requirements 7
3.8 Deleted 7
3.9 Accessibility and Maintenance 8
4 Materials 8
4.1 General 8
4.2 Prohibited Materials 9
5 Fabrication 9
5.1 General 9
5.2 Welding 9
6 Tests and Inspections 10
6.1 General 10
6.2 Measuring and Testing Equipment Calibration 10
6.3 Personnel Qualifications 11
6.4 Shop Tests 11
7 Preparation for Shipment 12
7.1 General 12
7.2 Tagging 12

7.3 Shipping, Handling and Storage Instructions....12
7.4 Painting....12
8 Quality Assurance (QA)....13
8.1 General Requirements....13
8.2 Quality Related Components....13
9 Configuration Management....13
10 Documentation and Submittals....13
10.1 General....13
10.2 Schedules....14
10.3 Submittals....14
11 Design Changes Incorporated By Reference....20

Exhibits

Exhibit 1 Electrical Requirements for Packaged Equipment .... Exhibit 1, Page 1
Exhibit 2 Pressure Vessel Design and Fabrication.... Exhibit 2, Page 1
Exhibit 3 Structural Design Loads for Seismic III & IV Equipment and Tanks.... Exhibit 3, Page 1
Exhibit 4 Positive Material Identification (PMI) for Shop Fabrication.... Exhibit 4, Page 1
Exhibit 5 Welding of Pressure Vessels, Heat Exchangers and Boilers.... Exhibit 5, Page 1
Exhibit 6 Seismic Qualification Criteria for Pressure Vessels.... Exhibit 6, Page 1
Exhibit 7 Deleted.
Exhibit 8 Instrumentation for Packaged Systems .... Exhibit 8, Page 1

Appendices

Appendix A: NRTL Certification ....Appendix A, Page A-1
Appendix B: Templated for Instrument Datasheet for Thermocouples ....Appendix B, Page B-1
Appendix C: Non-Modifiable Configurable Firmware (NMCF) Supplier Data Request ....Appendix C, Page C-1

1 Scope

1.1 Project Description and Location

The Office of River Protection (ORP) and its contractors manage 177 underground radioactive waste storage tanks at the Hanford Site in Washington. These tanks contain approximately 56 million US gallons of radioactive waste. Bechtel National, Inc. (BNI) has entered into contract with the US Department of Energy to design, construct, and commission the Hanford Tank Waste Treatment and Immobilization Plant (WTP) to process and vitrify this waste into a stable form that is suitable for permanent storage. The WTP will be constructed in the 200 East Area of the Hanford Site, near Richland, Washington. The main facilities within the WTP complex will be the Pretreatment facility (PTF), Low-Activity Waste facility (LAW), High-Level Waste facility (HLW), Balance of Facilities (BOF), Analytical Laboratory (Lab), and the Effluent Management Facility (EMF).

1.2 Equipment, Material, and Services Required

This specification establishes the minimum requirements for the performance, design, analysis, materials, fabrication, testing, inspection, quality assurance, qualification, documentation, and preparation for the shipment of the Preheaters upstream of the high efficiency particulate air (HEPA) filters serving the Vessel Vent Off-gas System in the Effluent Management Facility (EMF).

The scope of work for the Seller includes all work defined in this specification, its addenda, and exhibits. The scope of work for the Seller shall include, but is not limited to, the following:

1.2.1 Provide design, materials, fabrication, testing, qualification, inspection, preparation for shipment, documentation, and submittals of Preheaters in accordance with this specification and its addenda, the Mechanical Data Sheets (MDS), purchasing documents, and referenced codes, standards, and documents.

1.2.2 Provide a breakdown (by paragraph) of the codes, standards, and referenced documents to be applied to each aspect of design, drawings, analyses, fabrication, quality assurance, inspection, testing, qualification, labeling, packaging, handling, and shipment of the Preheaters for review prior to beginning of detailed design. If an entire section or part of the listed codes and standards applies, a breakdown by paragraph is not required. Only the part or section shall be listed.

1.2.3 Two (2) Heaters (DVP-HTR-00001A/B) and two (2) Control Panels (DVP-PNL-00001A/B) to be mounted on a single structural skid base (DVP-SKID-00001), dimensions not to exceed 80 in (L), 72 in (W), and 78 in (H).

1.2.4 Each Preheater shall include, but is not limited to, the following:

- Mounting support
- Circulation type flanged immersion heater
- Terminal housing
- Heating element protective thermocouple
- Process thermocouple and well assembly in outlet nozzle

1.2.5 Each Control Panel shall include, but is not limited to, the following:

- Heater temperature control
- Heater power regulation
- Heater over temperature controls
- Power disconnect switch
- Control Transformer

1.2.6 Provide instructions for transportation, storage, handling, and installation of the Preheaters skid per Seller's recommendations and the requirements of this specification.

1.2.7 Provide and submit procedures, reports, operation and maintenance manuals, and all documentation per this specification, and Forms G-321-E and G-321-V of the Material Requisition (MR).

1.2.8 Each Preheater and Control Panel shall be assembled on a skid and wired to the fullest extent in the shop, requiring minimum assembly, installation, and connection to Buyer's piping, electrical power supply, and control interface.

1.2.9 ASME Section VIII Code stamp and certification for the preheater vessels only.

1.3 Work by Others

Any item not specifically listed as being supplied by the Buyer shall be provided by the Seller. The Buyer shall supply the following:

1.3.1 Handling, storage, and installation of the Preheaters at the Buyer's job site.

1.3.2 Electric power to the Preheaters control panel.

1.3.3 Field testing of the Preheaters to ASME AG-1 Section TA.

1.3.4 Shipping and conveyance.

1.4 Acronyms, Abbreviations and Definitions

1.4.1 Acronyms and Abbreviations

ACI	American Concrete Institute
ADL	Additional Dynamic Loads
AISC	American Institute of Steel Construction
ALARA	As Low As Reasonably Achievable
ANSI	American National Standards Institute
ASME	American Society of Mechanical Engineers
CFR	Code of Federal Regulations
MTR	Material Test Report
DBE	Design Basis Events
DOE	US Department of Energy
DPD	Design Proposal Drawing
ECI	Export Controlled Items
EMF	Effluent Management Facility
EQ	Equipment Qualification
FML	Fluid Momentum Loads

HEPA	High Efficiency Particulate Air
HL	Hydrostatic Load
ICN	Integrated Control Network
ISRS	In-Structure Response Spectra
ITS	Important To Safety
IEEE	Institute of Electrical and Electronics Engineers
MDS	Mechanical Data Sheet
MR	Material Requisition
MTBF	Mean Time Between Failure
MTTF	Mean Time to Failure
MTTR	Mean Time to Repair
NPT	National Pipe Thread
NQA	Quality Assurance Program Requirements for Nuclear Facilities
NIST	National Institute of Standards and Technology
NRTL	Nationally Recognized Testing Laboratory
PMI	Positive Material Identification
PPJ	Programmable Protection System
QA	Quality Assurance
QAP	Quality Assurance Program
SC	Safety Class or Seismic Category
SDDR	Supplier Deviation Disposition Request
SS	Safety Significant
SSC	Structure, System, or Component
UL	Underwriters Laboratories, Inc.
WTP	Hanford Tank Waste Treatment and Immobilization Plant

1.4.2 Definitions

Buyer: Bechtel National Inc.

Seller: This term includes manufacturer, assembler, fabricator, supplier, vendor, contractor, sub-contractor, sub-supplier or equal who provides equipment, systems, components, services, or other products for delivery to the Buyer.

Preheaters: Refers to the Preheaters upstream of the "Safe Change" HEPA Filters in the Vessel Vent System.

MR: Refers to the material requisition for the Preheaters.

MDS: Refers to the mechanical data sheet for the Preheaters.

C3: C3 areas are the process areas where the potential for direct contact with radioactive material, contaminated systems and components, or both, exists.

R3: Radiation classification for areas with a target dose equivalent rate of less than 2.5 mrem/hr. Entry only to carry out prescribed tasks accordance with normal procedures and a Radiation Work Permit. Thermoluminescent Dosimeter and Radiation Worker training required for entry into Radiation Areas.

Certificate of Compliance (C of C): A written statement attesting that the materials are in accordance with specified requirements. This is related to the material of construction.

Certificate of Conformance (C of C): A document signed or otherwise authenticated by an authorized individual certifying the degree to which items or service meet specified requirements. This is intended for electrical parts.

1.5 Quality Level

The quality level of all manufactured products associated with this specification is Quality Level "CM".

1.5.1 Deleted.

1.6 Seismic Category

The EMF shall be designated a Seismic Category IV (SC-IV).

2 Applicable Documents

2.1 General

2.1.1 Work shall be done in accordance with the referenced codes, standards, and documents listed below, which are an integral part of this specification.

2.1.2 When specific chapters, sections, parts, or paragraphs are listed following a code, industry standard, or reference document, only those chapters, sections, parts, or paragraphs of the document are applicable and shall be applied.

2.1.3 For the codes and standards listed below, the specific edition year identified shall be followed. For the codes and standards that are incorporated by reference (daughter codes and standards), the referenced daughter edition or current edition shall be followed. If an edition is not identified, the latest issue, including addenda, at the time of the award shall apply. The edition year listed in Section 2.2 shall apply to subsequent references to the codes and standards within the specification and shall govern in case of conflict with edition years specified in the reference documents listed in Section 2.3 more than one code, standard or referenced document covers the same topic, the requirements for all must be met with the most stringent governing.

2.1.4 In case of conflict between this specification, referenced codes and standards, the requirements for all must be met with the most stringent governing.

2.1.5 In the absence of a listed standard, the Seller shall utilize industry consensus standards and commonly accepted practice appropriate for equipment designed for use in a DOE Nuclear Facility. In the event that a listed practice, national standard or approach is not followed, the Supplier shall be required, upon request from the Buyer, to provide appropriate justification.

2.1.6 Deleted.

2.2 Codes and Standards

2.2.1 10 CFR 835, *Occupational Radiation Protection*

2.2.2 ASME AG-1-1997 with AG-1-a-2000 Addenda, Sections AA, CA and TA, *Code on Nuclear Air and Gas Treatment*

2.2.3 ASME Boiler and Pressure Vessel Code, Section V, *Nondestructive Examination.*

2.2.4 ASME Boiler and Pressure Vessel Code, Section IX, *Qualification Standard for Welding and Brazing Procedures, Welders, Brazers, and Welding and Brazing Operators*.

2.2.5 ASME Boiler and Pressure Vessel Code, Section II, *Materials.*

2.2.6 ASME Boiler and Pressure Vessel Code, Section VIII.

2.2.7 ASME Y14.100, *Engineering Drawing Practices.*

2.2.8 UL, Underwriters Laboratories Inc., Listed.

2.3 Reference Documents/Drawings

2.3.1 24590-WTP-3PS-G000-T0003, *Engineering Specification for Packaging, Handling, and Storage Requirements.*

2.3.2 24590-WTP-3PS-G000-T0014, *Engineering Specification for Supplier Design Analysis*

2.3.3 24590-WTP-3PS-JQ00-T0004, *Engineering Specification for Management of Supplier Software.*

2.3.4 24590-WTP-LIST-ESH-16-0001, *Restricted Materials List WTP- Hanford Tank Waste Treatment and Immobilization Plant Project.*

3 Design Requirements

3.1 Basic Function

3.1.1 The Preheaters are located upstream of their respective HEPA filters in the vessel vent offgas stream. The Preheaters are used to ensure the vessel vent offgas stream temperature is sufficiently above the dew point to prevent moisture condensation in the HEPA filter

3.1.2 The Preheaters provide confinement of radioactive materials to prevent releases that may result in consequences to the public, co-located worker, and facility worker above radiation exposure standards in the WTP Safety Requirements Document.

3.1.3 The Preheaters shall provide overheating protection to ensure HEPA filters, filter housing, concrete and structural components around the Preheater housing, and the Preheater enclosure are not damaged due to overheating.

3.1.4 The Preheaters shall have the capability of variable power input to control heater outlet temperature.

3.2 Performance

3.2.1 The Preheaters shall be designed, fabricated and tested per the mechanical and performance requirements of this specification, the MDSs, and the purchasing documents. Seller shall submit updated MDSs with the required information for acceptance by the Buyer per Form G-321-E of the MR.

3.2.2 Seller shall recommend additional operating parameters to be monitored for the Preheaters to achieve their required performance.

3.2.3 The Preheaters, with exception of the heating elements, shall be designed to operate for a minimum service life of 40 years. Control panels and its components (excluding fuses) shall have a minimum design life of 10 years or longer.

3.2.4 The minimum required mean time to failure (MTTF) for each heating element is 5 years @ 8760 hours of use per year.

3.3 Preheater Design

3.3.1 As Low As Reasonably Achievable (ALARA) principles shall be applied to the design of the Preheaters per 10 CFR 835, *Occupational Radiation Protection*.

3.3.2 Seller shall design the Preheaters to meet the requirements of:

a. ASME AG-1 Articles AA-4000 and CA-4400
b. ASME Boiler and Pressure Vessel Code, Section VIII, Division 1 (for Preheater housing)
c. Exhibit 2, *Pressure Vessel Design and Fabrication,* Section 9.2.
d. the MDSs

For the above listed, the more stringent of the requirements shall govern the design.

3.3.3 The vessel vent offgas stream shall be contained within each Preheater.

3.3.4 Nozzle design, loading and reinforcement shall be in accordance with Exhibit 2, *Pressure Vessel Design and Fabrication*, Section 9.2. Seller shall provide nozzle loading calculations per Form G-321-E of the MR.

3.3.5 Deleted.

3.3.6 Refer to the MDSs for corrosion allowance requirements.

3.3.7 Seller shall design the preheaters skid to fit within the space envelope specified in the MDSs.

3.3.8 Deleted

3.3.9 Unless otherwise specified on the Data Sheets, the following loads (as defined in ASME AG-1 Article AA-4211) may be considered not applicable to the design and therefore assumed to be zero: additional dynamic loads (ADL), fluid momentum loads (FML), design wind (W), hydrostatic load (HL), design pressure differential (DPD).

3.4 Environmental Conditions

3.4.1 The preheaters skid will be installed indoors.

3.4.2 The preheaters skid shall be stored indoors before installation and able to withstand ambient temperatures ranging from -23°F to 113°F with relative humidity ranging from 5% to 100%, without incurring damage from such conditions prior to installation.

3.5 Loading

3.5.1 Seller shall design the preheaters skid to be self-supporting and be capable of handling the loads and moments imposed on the preheaters skid during testing, packaging, shipping, handling, storage, installation, and operation (including seismic event). Seller shall provide calculations and/or test reports to support that the preheaters skid meet all requirements for Seismic Category IV. Structural loadings at the equipment anchorages shall be developed in accordance with the criteria and load equations of Exhibit 3, *Structural Design Loads for Seismic Category III & IV Equipment and Tanks.*

3.5.2 Loads to be considered for the structural design of the Preheaters shall be in accordance with the codes, standards, and referenced documents listed in Section 2 of this specification.

3.6 Electrical Requirements

3.6.1 Electrical requirements for the Preheaters shall be in accordance with Exhibit 1, *Electrical Requirements for Packaged Equipment.*

3.6.2 The available power supply for the Preheaters is 480 Volts, three phase, alternating current.

3.6.3 Terminal housing shall be UL liquid tight.

3.6.4 Immersion heating elements shall be designed for corrosive gas.

3.6.5 Panel thermal magnetic breakers shall be operable from the front of the panel and have a short circuit rating of 65kA or higher.

3.6.6 Magnetic contactors and panels shall be rated to match magnetic breakers.

3.6.7 Control panels shall be NEMA-4X stainless steel.

3.7 Instrumentation and Control Requirements

3.7.1 Seller shall design and fabricate each Preheater and thermostat in accordance with Industry practice and standards.

3.7.2 Thermocouples for over-temperature controls shall be Type J.

3.7.3 Thermocouples (DVP-TE-8125 and DVP-TE-8126) for outlet heater temperature control shall be Type J.

3.7.4 Design of the Preheater shall allow for continuous operation despite individual heating element failure, until the maximum element failure percentage as stated in the MDS is reached. Each heating element shall include an internal thermocouple to provide over-temperature protection.

3.7.5 Control panels including temperature controllers (DVP-TC-8125 and DVP-TC-8126) and instrumentation shall be furnished in accordance with Exhibit 8, *Instrumentation for Packaged Systems.* Controls shall maintain the preheater outlet temperature at a pre-set temperature. Temperature set point is to be adjustable at the control panel.

3.8 Deleted

3.9 Accessibility and Maintenance

3.9.1 Preheater maintenance including replacement of individual heating elements and temperature sensors shall be readily accessible for routine maintenance and prompt return to operational service.

3.9.2 Seller shall provide a list of equipment and components requiring maintenance or replacement over the 40-year minimum service life of the Preheaters. The list shall include recommendations for frequency of maintenance and replacement. Seller shall provide a spare parts list with cost.

4 Materials

4.1 General

4.1.1 All materials of construction for the Preheaters shall conform to the requirements of:

- ASME AG-1 Articles AA-3000, CA-3400 and CA-3500
- ASME Section VIII, Division 1
- the MDSs
- the purchasing documents

4.1.2 All materials used shall be new and free of defects.

4.1.3 All materials used shall be resistant to deterioration when used in a radioactive environment for a minimum service life of 40 years.

4.1.4 Heater pressure boundary materials shall be stainless steel type 316L.

4.1.5 Seller shall furnish legible copies of Material Test Reports (MTR) or Material Manufacturers Certificate of Compliance for all bulk carbon and stainless steel materials for mounting hardware and control/power enclosure support steel and mounting hardware. All materials shall be traceable to the MTR through markings or drawing prints.

4.1.6 Seller shall not substitute materials specified in this specification, the applicable documents, the MDSs, and the purchasing documents without written approval from the Buyer.

4.1.7 Seller shall maintain a positive system of identification of materials used in the fabrication of the Preheaters in accordance with Exhibit 4, *Positive Material Identification (PMI) for Shop Fabrication*. Heating elements are considered that same as heat exchanger tubing and shall not be stamped (Refer to Exhibit 4, Section 5.3).

4.1.8 Seller shall submit (Material) Safety Data Sheets for all hazardous materials used in the construction of the Preheater housings, in the heating elements and temperature sensor thermowell assemblies.

4.1.9 All material shall be controlled, issued, handled and stored with proper identification and heat traceability. Seller shall prepare and submit material control procedures for Buyer review.

4.1.10 Deleted

4.1.11 The preheaters shall be insulated per material and thickness specified in Mechanical Data Sheet.

4.2 Prohibited Materials

4.2.1 Deleted

4.2.2 Deleted

4.2.3 Deleted

4.2.4 Deleted

4.2.5 Deleted

4.2.6 The materials listed in 24590-WTP-LIST-ESH-16-0001, *Restricted Materials List* shall not be used in any supplied equipment and shall not be brought onto WTP site.

5 Fabrication

5.1 General

5.1.1 Fabrication of the Preheaters shall conform to the requirements of:

- ASME AG-1 Articles AA-6000.
- ASME Section VIII
- the MDSs
- the purchasing documents

5.1.2 The pressure boundary for the off-gas stream shall be fabricated to the requirements of ASME Boiler and Pressure Vessel Code Section VIII, Division 1 and Exhibit 2, *Pressure Vessel Design and Fabrication*.

5.1.3 All edges shall be rounded and smooth to the touch. All stainless steel surfaces shall be clean, free of stains, scale, and deposits. All weld spatter, slag, and heat affected zone oxides shall be removed.

5.2 Welding

5.2.1 Welding of the Preheaters shall conform to the requirements of:

- ASME AG-1 Articles AA-6300.
- ASME Section VIII
- the MDSs

5.2.2 Seller shall submit Welding Procedure Specification (WPS) and Procedure Qualification Requirements (PQR) and Welder Qualification Procedure (WQP) per Section 10.3.6.2 of this specification.

6 Tests and Inspections

6.1 General

6.1.1 Seller shall conduct and be responsible for all testing and inspections of the Preheaters per the requirements of this specification, ASME AG-1 Articles AA-5000 and CA-5400, and all applicable references in Section 2 of this specification.

6.1.2 Seller shall develop and submit detailed procedures for all tests and inspections for the Preheaters per the requirements of this specification, applicable codes, standards, reference documents, and Form G-321-E of the MR for Buyer review.

6.1.3 Seller shall complete and submit reports of all testing and inspections required by this specification and per Form G-321-V of the MR. Each report shall identify the component tested or inspected, date performed, applicable procedures, acceptance criteria, person performing the test or inspection, results, and conclusions.

6.2 Measuring and Testing Equipment Calibration

6.2.1 Measuring and Testing Equipment (M&TE) for final acceptance testing must be calibrated by an accredited lab.

6.2.2 Laboratory service providers, such as suppliers of calibration services or material testing/analysis, may be qualified without audit if they are accredited by the American Association for Laboratory Accreditation (A2LA), National Voluntary Laboratory Accreditation Program (NVLAP); International Accreditation Services, Inc. (IAS); ANSI-ASQ National Accreditation Board (ACLASS); Perry Johnson Laboratory Accreditation, Inc. (PJLA); Laboratory Accreditation Bureau (L-A-B); Korea Laboratory Accreditation Scheme (KOLAS); Sistema Italiano di Accreditamento (ACCREDIA); Comite Francias d'Accreditation (COFRAC); United Kingdom Accreditation Services (UKAS) or certification to ISO 9001 for calibration service providers when the company is the original equipment manufacturer (OEM) and a justification for using ISO 9001 is documented.

6.2.3 Use of the certification/accreditations in Section 6.2.2 requires that:

- The supplier's QA Program permits the method of qualification.
- The procured service is included in the scope of the certification/accreditation.
- The certification/accreditation must be the current at the time the service is provided.
- The supplier must have and retain a copy of the certificate/accreditation in effect at the time of the provided service.
- The supplier must evaluate the validity of the certificate/accreditation. The evaluation must be documented and retained for review by Buyer.

6.2.4 Calibration services obtained using the options in Section 6.2.2 must provide the following information:

- Calibration certificate report/shall include identification of the laboratory equipment/standards used.

- Calibration certificate/report shall include as-found and as-left data, regardless of the need for adjustment or repair.
- Well-defined and documented measurement assurance techniques or uncertainty analyses May be used to verify the adequacy of the measurement process. If such techniques are not used the collective uncertainty of the measurement standards shall not exceed 25% of the acceptable tolerance for each characteristic being calibrated.
- Calibration certificate/report shall include reference to the calibration procedure number and revision or date, or the report shall reference the Quality Manual and the revisions or date.

6.3 Personnel Qualifications

6.3.1 All inspections and tests shall be performed by personnel qualified per the requirements of this specification and all applicable references in Section 2 of this specification.

6.3.2 Seller shall submit personnel qualification documents of Seller's inspection and test personnel in accordance with Exhibit 5, *Welding of Pressure Vessels, Heat Exchangers and Boilers,* Section 4.10 for Buyer review.

6.4 Shop Tests

6.4.1 Seller shall provide all materials, labor, tools, equipment, appurtenances, and instrumentation to conduct all shop tests on the Preheaters.

6.4.2 Seller shall conduct tests and inspections specified in ASME AG-1 Articles AA-5000.

6.4.3 Seller shall conduct visual inspection on the Preheaters and provide an inspection checklist in accordance with Exhibit 2, *Pressure Vessel Design and Fabrication,* Section 7.2.9 for Buyer review.

6.4.4 Seller shall conduct weld inspections for soundness using radiography and liquid penetrant examinations on each Preheater in accordance with ASME AG-1 Article AA-5300, Exhibit 2, *Pressure Vessel Design and Fabrication*, Section 7.2 and Exhibit 5, *Welding of Pressure Vessels, Heat Exchangers and Boilers where applicable*, Section 10.1.1.

6.4.5 Buyer to review and accept Seller's PMI procedure prior to performance of PMI. In lieu of the Seller performing PMI, an accredited lab meeting the criteria specified in Section 6.2.2 will be utilized.

6.4.6 Seller shall conduct pneumatic leak or hydrostatic test on each of the Preheater in accordance with ASME Boiler and Pressure Vessel Code, Section V and Exhibit 2, *Pressure Vessel Design and Fabrication,* Section 7.3. Acceptance criterion: *No leaks observed.*

6.4.7 Instrumentation and control systems shall be functionally tested, inspected, and calibrated in accordance with recognized industry practice and standards.

6.4.8 Seller shall provide all equipment, instrumentation, labor, and materials to perform a lifting test in the shop, demonstrating that the lifting lugs or attachment points are adequate to support the Preheaters skid without any distortion. Seller shall provide a shop test report on lifting points provided on Preheater skid.

6.4.9 A test report shall be prepared for each completed test. All test results shall be documented, certified (signed) by appropriate employee of the Seller and included in the documentation package.

6.4.10 Seller shall perform fit-up and functional tests on one (1) of the fully assembled Preheaters and control panels on the skid to demonstrate:

- Installation, removal, and replacement of the heating element and temperature sensor.
- Over-temperature protection

7 Preparation for Shipment

7.1 General

7.1.1 The Preheaters shall be prepared for shipment in accordance with Buyer specification 24590-WTP-3PS-G000-T0003, *Engineering Specification for Packaging, Handling and Storage Requirements.*

7.1.2 Seller shall verify, by calculation, that the Preheaters and its internals on the skid will withstand loads occurring during shipping, handling, and installation.

7.2 Tagging

7.2.1 A stainless steel nameplate shall be permanently and rigidly affixed to each Preheater containing, as a minimum, the following information:

a. Seller's name and serial number
b. year of manufacture
c. Buyer's purchase order number
d. plant item number as furnished by the Buyer
e. capacity, kW
f. electrical characteristics, V/Phase/Hz

7.2.2 The information shall be stamped or etched on the nameplate using characters no less than 1/8 inch tall.

7.2.3 The attachment and location of nameplates shall be in accordance of Articles AA-9130 and AA-9140 of ASME AG-1.

7.3 Shipping, Handling and Storage Instructions

7.3.1 Seller shall submit shipping weights as well as detailed shipping, handling, and storage instructions for the skid assembly prior to its shipment.

7.3.2 Seller shall provide storage instructions for storage interval greater than one year.

7.4 Painting

7.4.1 Carbon steel components and structures (excluding standard control panels/boxes) shall be painted.

7.4.2 Seller to submit painting procedure for Buyer review and acceptance.

8 Quality Assurance (QA)

The SELLER's standard manufacturing Quality Assurance Program (QAP) shall be used to monitor and maintain the acceptable activities to meet the requirements of this procurement. A copy of the manual shall be submitted for information only.

8.1 Deleted.

8.2 Deleted.

9 Configuration Management

9.1 The equipment covered by this specification is identified with the plant item number shown in the MDSs.

9.2 Deleted.

10 Documentation and Submittals

10.1 General

10.1.1 Seller shall submit for Buyer review all detailed designs, documentation, procedures, instructions (including erection and installation instructions), calculations, analyses, models, manufacturer data, inspection reports, test reports, and seismic qualification reports, material test reports, certifications, certificates, manuals (including operations and maintenance manuals), (Material) Safety Data Sheets, spare parts list, and drawings required per this specification, its addenda and attachments, the purchasing documents, and referenced codes, standards and Buyer documents.

10.1.2 Seller shall submit to Buyer the Engineering and Quality Verification documents in the forms, quantities, and timing shown in Form G-321-E, *Engineering Document Requirements*, and Form G-321-V, *Quality Verification Document Requirements*, in the MR.

10.1.3 Seller shall provide detailed operating and maintenance instructions, in the form of a manual, or similar, for the Preheaters per Form G-321-E of the MR and sections 1.2.7 and 10.3.5 of this specification.

10.1.4 All deviations and/or conflicts considered for incorporation in the work must be submitted to the Buyer on completed Supplier Deviation Disposition Request (SDDR) form, as attached to Part 2 of the MR, for Buyer's review and consideration for approval.

10.1.5 Seller shall submit their Quality Assurance (QA) program manual for review by the Buyer (Section 8).

10.1.6 All drawings shall be produced per the drawing practices set forth in ASME Y14.100, *Engineering Drawing Practices.*

10.2 Schedules

10.2.1 Each document to be submitted per G-321-E form must be listed on the 15 EX form, as attached to Part 2 of the MR. This form tracks the scheduled and actual delivery of each submittal.

10.3 Submittals

10.3.1 Data Sheet

Seller shall submit the following:

a) Completed Mechanical Data Sheet as listed in Part 2 of the MR.

b) Completed Instrument Data Sheet listed in Appendix B, *Template for Instrument Data sheet for Thermocouples* of this specification.

c) Completed Non-Modifiable Configurable Firmware (NMCF) Supplier Data Request listed in Appendix C, Page C-1 of this specification.

10.3.2 Drawings

10.3.2.1 Outline Drawings

Seller shall provide outline and assembly drawings for the HEPA Filter Preheaters.

a. Seller shall provide drawings with outline dimensions, services, foundations, and mounting details. Drawings shall show external envelope, location, and size for electrical cable, conduit, fluid, other service locations and identification of parts included in the parts list, and details related to foundations and mountings.

b. Outline drawings shall also include the requirements of Exhibit 2, *Pressure Vessel Design and Fabrication,* Section 9.2.1 and Exhibit 8, *Instrumentation for Packaged Equipment*, Section 11.2.3.

10.3.2.2 Assembly Drawings

Seller shall submit assembly drawings in accordance with Exhibit 2, *Pressure Vessel Design and Fabrication,* Section 9.6.

10.3.2.3 Shop Detail Drawings

Seller shall submit shop detail drawings in accordance with Exhibit 2, *Pressure Vessel Design and Fabrication,* Section 9.6.

10.3.2.4 Electrical Drawings, Schematics, and Wiring Drawings

Seller shall provide single line diagrams, schematic diagrams, equipment internal wiring diagrams, and interconnection wiring diagrams for electrical items in accordance with Exhibit 1, *Electrical Requirements for Packaged Equipment*, Sections 9.1.2, 9.1.4, and 9.1.5 and Exhibit 8, *Instrumentation for Packaged Equipment,* Section 11.2.5.

Seller shall provide instrument loop diagrams in accordance with Exhibit 8, *Instrumentation for Packaged Equipment,* Section 11.2.7.

10.3.3 Lists

10.3.3.1 Recommended Spare Part List

Seller shall provide a list of recommended spare parts and supplies required for maintenance and repair to ensure continued service or operation without unreasonable delays, including the cost of each item. Seller shall provide a list of startup and commissioning spares, including all components that may be needed during startup and commissioning. The list shall include manufacturer's name, model number, shelf life and lead time.

In addition, the recommended parts list shall comply with Exhibit 1, *Electrical Requirements for Packaged Equipment*, Section 9.1.8 and Exhibit 8, *Instrumentation for Packaged Equipment,* Section 11.6.2.

10.3.3.2 Material List

Seller shall provide a material list with specific model number, manufacturer, and catalog cut sheets for all equipment.

In addition, seller shall provide a material list in accordance with Exhibit 1, *Electrical Requirements for Packaged Equipment,* Section 9.1.6.

10.3.3.3 Electrical Loads

Seller shall provide a list of all electrical loads in the package in accordance with Exhibit 1, *Electrical Requirements for Packaged Equipment,* Section 9.1.7 and Exhibit 8, *Instrumentation for Packaged Equipment,* Section 11.4.1.

10.3.3.4 Deleted.

10.3.3.5 Instrument List

Seller shall submit an instrument list in accordance with Exhibit 8, *Instrumentation for Packaged Systems,* Section 11.2.2.

10.3.3.6 Deleted.

10.3.4 Product Data

10.3.4.1 Inspection and Test Plans

Seller shall provide a detailed description of their work inspections and tests planned during the receipt of materials, manufacturing, testing, and conformance verification activities. Seller shall include identification of witness and hold points.

In addition, Seller shall provide inspections and test plans in accordance with Exhibit 2, *Pressure Vessel Design and Fabrication*, Section 9.7.

10.3.4.2 Safety Data Sheets (SDS)

Seller shall submit SDSs for all chemicals and hazardous materials shipped to WTP, including but not limited to lubricants, gears oils, greases, solvent, etc.

10.3.4.3 Hardness Testing Procedure

Seller shall submit a procedure for hardness testing per Exhibit 2, *Pressure Vessel Design and Fabrication*, Section 7.1.3.

10.3.4.4 Shipping Preparation

Seller shall provide shipping information in accordance with 24590-WTP-3PS-G000-T0003, *Engineering Specification for Packaging, Handling, and Storage Requirements,* Section 11.2 and Sections 7.3.1 and 7.3.2 of this specification.

10.3.4.5 Manufacturer's Technical Literature for Instrumentation

Seller shall provide manufacturer's technical literature for all technical components and instrumentation.

10.3.4.6 Software Configuration Documentation

Seller shall submit software configuration documentation for "Profibus" protocol communication for the heaters in accordance with Buyer specification, 24590-WTP-3PS-JQ00-T0004, *Engineering Specification for Management of Supplier Software,* Section 7.

10.3.4.7 System and Component Descriptions

Seller shall provide system and component descriptions. The system description shall describe how the overall system functions and the basic design basis as well as include component interfaces and interactions. The component description shall describe how each individual process component functions and the basic design basis as well as include component interfaces and interactions.

10.3.4.8 Ferrite Data

Seller shall submit ferrite data on welding materials to comply with requirements specified in Exhibit 5, *Welding of Pressure Vessels, Heat Exchangers, and Boilers,* Section 6.1.

10.3.5 Manuals

10.3.5.1 Installation Instruction Manual

Seller shall submit an Installation Instruction Manual in accordance with 24590-WTP-3PS-G000-T0003, *Engineering Specification for Packaging, Handling, and Storage Requirements*, Section 11.1.1.

Erection and installation manuals shall provide complete, detailed procedures for installing and placing equipment in initial operation. These manuals shall include all erection and installation drawings.

10.3.5.2 Operation and Maintenance Manuals

Operation and maintenance manuals shall provide complete, detailed descriptions of components and instrumentation with data sheets showing design, construction, and performance data for equipment. Manuals shall include drawings for operation, maintenance

and repair, maintenance requirements, instructions and operational trouble-shooting guides. All manuals/drawings shall include OEM part numbers.

10.3.5.3 Site Storage, Handling, and Maintenance Requirements Manual

Seller shall submit a Site Storage, Handling, and Maintenance Requirements Manual with procedures and instructions for site storage, handling, and maintenance that will preserve equipment until it is put into operation in accordance with 24590-WTP-3PS-G000-T0003, *General Specification for Packaging, Shipping, Handling, and Storage Requirements*, Section 11.1.2.

10.3.5.4 Quality Assurance Manual

Seller shall submit their Quality Assurance (QA) program manual for review by the Buyer (Section 8).

10.3.6 Procedures

10.3.6.1 Electrical Test Procedures

Seller shall provide electrical test procedures and reports to demonstrate function and operational parameters are met (e.g., overload, voltage, temperature rise, calibration, saturation loss, etc.).

10.3.6.2 Welding and NDE Procedures and Qualifications

Seller shall provide welding, weld inspection, NDE and weld repair procedures and personnel qualifications in accordance with the following (including sub-tier contractors/suppliers):

a. Exhibit 5, *Welding of Pressure Vessels, Heat Exchangers and Boilers,* Section 4.
b. Exhibit 2, *Pressure Vessel Design and Fabrication,* Sections 7.2.1, 7.2.2 and 9.1.

10.3.6.3 Material Control Procedures

Seller shall provide material control procedures including controlling issuance, handling, storage and traceability of materials such as weld rod.

10.3.6.4 Functional Shop Test Procedure

Seller shall submit functional shop test procedures in accordance with Exhibit 8, *Instrumentation for Packaged Equipment,* Section 11.3.2 and section 6.4 of this specification.

10.3.6.5 Positive Material Identification (PMI) Procedures

Seller shall submit procedures covering how PMI will be conducted and documented per Exhibit 4, *Positive Material Identification (PMI) for Shop Fabrication,* Section 3.2.

10.3.6.6 Heat Treatment Procedure

Seller shall submit a procedure for heat treatment per Exhibit 2, *Engineering Specification for Pressure Vessel Design and Fabrication,* Sections 7.1.5.

10.3.6.7 Pressure Test Procedure

Seller shall submit pressure testing procedures including hydro, air, leak, separation or vacuum test procedures for performing hydrostatic or pneumatic structural integrity and leakage tests per Exhibit 2, *Pressure Vessel Design and Fabrication,* Section 7.3 and Section 6.4.6 of this specification.

10.3.6.8 Radiographic Examination Procedures

Seller shall conduct weld inspections for soundness using radiography examinations on each preheater in accordance with Exhibit 2, *Pressure Vessel Design and Fabrication*, Sections 7.2.1 and 7.2.5 and section 6.4.4 of this specification.

10.3.6.9 Liquid Penetrant Procedures

Seller shall conduct weld inspections for soundness using liquid penetrant examinations on each Preheater in accordance with Exhibit 2, *Pressure Vessel Design and Fabrication*, Section 7.2.7 and section 6.4.4 of the specification.

10.3.6.10 Painting Procedure

Seller shall submit painting procedure per section 7.4.2 of the specification.

10.3.7 Reports

10.3.7.1 Seismic Analysis

Seller shall provide Seismic Analysis of the equipment. Loading shall be calculated in accordance with Exhibit 3, *Structural Design Loads for Seismic Category III & IV Equipment and Tanks*.

The seismic analysis shall be performed per the requirements of Exhibit 2, Pressure Vessel *Design and Fabrication,* Section 3.2 and Exhibit 6, *Seismic Qualification Criteria for Pressure Vessels,* and section 3.5 of this specification.

10.3.7.2 Electrical Test Reports

Seller shall submit electrical test reports and certificates in accordance with Exhibit 1, Electrical *Requirements for Packaged Equipment*, Section 6.

10.3.7.3 Deleted.

10.3.7.4 Heat Treat Report

Seller shall submit heat treat report in accordance with Exhibit 2, *Pressure Vessel Design and Fabrication*, Section 9.8.1.

10.3.7.5 Radiographic Examination and Verification Report

Seller shall submit radiographic examination and verification report in accordance with Exhibit 2, *Pressure Vessel Design and Fabrication*, Section 9.8.3.

10.3.7.6 RT Film and Reader Sheets

Seller shall submit RT films in accordance with Exhibit 2, *Pressure Vessel Design and Fabrication*, Section 9.8.4.

10.3.7.7 Liquid Penetrant Report

Seller shall submit liquid penetrant report in accordance with Exhibit 2, *Pressure Vessel Design and Fabrication*, Section 9.8.6.

10.3.7.8 Pressure Test Report

Seller shall submit pressure test report in accordance with Exhibit 2, *Pressure Vessel Design and Fabrication*, Section 9.8.7.

10.3.7.9 Inspection and Verification Report

Seller shall submit documented findings resulting from an inspection.

10.3.7.10 Mechanical Test Report

Seller shall submit mechanical test report in accordance with Exhibit 2, *Pressure Vessel Design and Fabrication*, Section 9.8.9.

10.3.7.11 Certificates of Compliance/Conformance

a. For items that do not require Material Test Reports, in accordance with section 4.1.5 of this specification, the SELLER shall furnish Certificate of Compliance confirming the materials for construction are new, free from defects, and purchased in accordance with the material requirements listed on the MDS.

b. Seller shall submit a signed Certificate of Conformance, COC for NRTL (UL) requirements (Appendix A, within the body of this specification, Page A-1, *NRTL Certification* can be used by the Seller).

10.3.7.12 Deleted.

10.3.7.13 ASME Data Report

Seller shall provide ASME Section VIII, Division 1 data reports in accordance with Exhibit 2, *Pressure Vessel Design and Fabrication*, Section 9.5.

10.3.7.14 Positive Material Identification (PMI) Reports

Seller shall submit PMI testing reports, including a PMI map in accordance with Exhibit 4, *Positive Material Identification (PMI) for Shop Fabrication,* Section 6 and Section 4.1.10 of this specification.

10.3.7.15 Material Test Reports

Seller shall submit material test report (MTR) and /or Certificates of Compliance (C of c) in accordance with 4.1.5 of this specification and Exhibit 5, *Welding of Pressure Vessels, Heat Exchangers and Boilers,* Section 6.4.

10.3.7.16 Deleted

10.3.7.17 Welding Verification Documents (Weld Map)

A verification report of welds performed including the identification of the qualified weld(s), and certification of the qualified weld(s), and certification that the weld(s) were qualified.

Seller shall submit a weld map for each weld in accordance with Exhibit 5, *Welding of Pressure Vessels, Heat Exchangers and Boilers*, Section 4.2. Include NDE/PMI maps on the weld map drawings.

10.3.7.18 Design Compliance Matrix

Seller shall submit a ASME AG-1 Code Compliance Matrix identifying how the Seller is complying with the sections of ASME AG-1 referenced by the specification.

10.3.8 Calculations

10.3.8.1 Calculation and Analysis

All calculations and analyses to be provided to the Buyer shall be done in accordance with 24590-WTP-3PS-G000-T0014 *Engineering Specification for Supplier Design Analyses,* Section 3.2-3.3.8.

Calculations/analyses to be provided for Buyer's review shall include:

a. Deleted
b. Preheater design and performance calculations/analyses in accordance with Section 3.3 of this specification, including ASME Boiler and Pressure Vessel Code Section VIII analysis as well as Exhibit 2, *Pressure Vessel Design and Fabrication,* Section 9.2.
c. Deleted
d. Lifting, handling and shipping load analyses in accordance with Sections 6.4.8 and 7.1 of this specification and 24590-WTP-3PS-G000-T0003, *General Specifications for Packaging, Handling and Storage Requirements,* Section 11.1.1.
e. Stress analyses per ASME AG-1. AA-4331 (Component service level A).

10.3.8.2 Deleted.

11 Design Changes Incorporated by Reference

24590-WTP-SDDR-MS-18-00060

Exhibit 1

Electrical Requirements for Packaged Equipment

Specification 24590-WTP-3PS-EKP0-T0001, Rev. 5 and its associated Specification Change Notices (SCN) (24590-WTP-3PN-EKP0-00008 and 24590-WTP-3PN-EKP0-00010) were used, as applicable, to create the following exhibit.

1 Scope	
1.1 General	
1.1.1	This exhibit is intended to be included as any one of the following: • An attachment to the primary packaged equipment specification • In the scope of Sub-contract packages • To have applicable sections included within the primary specification Included within this exhibit are definitions of the requirements for electrical equipment, materials and installation which are provided as manufacturer standard or custom design and pre-assembled units, in accordance with the National Codes and Industry Standards.
1.1.2	The primary specification shall identify the scope of supply, installation, and testing of the interconnecting wiring and cabling between skids and/or shipping units for packages consisting of more than one skid or shipping unit. If it is not specified in the primary specification, the Supplier shall furnish, terminate and test all inter-connecting wiring and cabling within the package. The interface between the Buyer's and the Supplier's systems shall only be at the Supplier's interface panel(s) unless otherwise agreed to by the Buyer and Supplier.
1.1.3	If conflicts arise between this exhibit and the primary specification, the primary specification shall take precedence.
1.3 Definitions	Buyer: Bechtel National Inc. Supplier: This is a comprehensive term and includes seller, vendor, contractor, subcontractor, sub-supplier, etc. Primary Specification: The mechanical packaged equipment specification or subcontract package in which this "Electrical Requirements for Packaged Equipment" exhibit is referenced.
2 Criteria for Acceptability of Electrical Equipment	• All electrical equipment for facility and equipment wiring, as defined by the National Electrical Code NFPA 70-1999, shall be Approved. Approval will be in accordance with Article 90-4, "Enforcements", Article 90-7, "Examination of Equipment for Safety," and Article 110-3, "Examination, Identification, Installation, and Use of Equipment." • Approved means "Acceptable to the Authority Having Jurisdiction" (AHJ), as defined in Article 100 of NFPA 70-1999. Only the WTP Electrical AHJ can provide the approval. • "Equipment" is defined by the NFPA 70 as, "A general term including material, fittings, devices, appliances, fixtures, apparatus, and the like used as a part of, or in connection with an electrical installation". As used here, the entire mechanical assembly is not considered an electrical installation, only the electrical and/or electronic components, and the interconnecting wiring. • Listing and labeling by an OSHA Recognized NRTL is the primary means (Method 1 below) of obtaining WTP AHJ approval for electrical equipment, devices and materials. • All Control Panels shall be UL labeled by a certified UL 508A shop. • Electrical Equipment that is installed on (standard or custom fabricated) Mechanical

	Equipment shall comply with the requirements stated above. • Electrical Equipment, that is part of a Mechanical Packaged Equipment assembly, being field-evaluated and Labeled at the factory by a NRTL is an alternate method of obtaining WTP AHJ approval.
2.1 Method 1 (Primary): Listed, Labeled or Certified (i.e. UL508A)	
2.1.1	The WTP AHJ will approve and accept electrical equipment without additional examination if it is Listed, Labeled, or Certified by a US NRTL, as recognized by OSHA under 29 CFR 1910-Subpart S and is acceptable for the application, environment and other requirements of NEC Article 110. For a listing of and Typical Registered Certification Marks of US NRTL's recognized by OSHA go to the current OSHA listing available on their website.
2.1.2	The supplier shall submit a Certificate of Compliance (C of C) document for review and approval by the AHJ that lists the USA Electrical Standard(s) that each electrical material or equipment is evaluated to for it's NRTL Listing. Only those standards that are on the OSHA website are acceptable to the AHJ. The certification shall confirm that the NRTL Label for each electrical component will be as shown on the current OSHA listing available on their website including the additional markings required to indicate acceptability for use in the USA.
2.2 Method 2 (Alternate): Field Evaluation by a NRTL	
2.2.1	Electrical equipment that is part of an overall electrical or mechanical assembly having a NRTL field evaluation, where the report states that the equipment has been accepted or otherwise deemed safe by the NRTL recognized by OSHA under 29 CFR 1910-Subpart S, using US standards, will be evaluated by the WTP AHJ for acceptability. If found acceptable no further examination of the equipment is required.
2.2.2	The supplier shall submit all field evaluation reports completed by an OSHA recognized NRTL to the Buyer for review and approval by the AHJ. These field evaluation reports shall show compliance to the applicable USA Electrical Standard(s) recognized by OSHA. The NRTL Label will be as shown on the current OSHA website with whatever additional markings that are necessary to indicate acceptability for use in the USA.
3 Applicable Documents	
3.1 Codes and Standards	The equipment and installation shall conform to the applicable sections of the following National Codes and Industry Standards. **29 CFR 1910, Subpart S** - Occupational Safety and Health Standards, Electrical **NFPA 70** (1999) - National Electric Code (NEC) **ANSI C80.1** - American National Standard For Electrical Rigid Steel Conduit (ERSC) **IEEE 383** (1974) - Standard for Type Test of Class IE Electric Cables, Field Splices, and Connections for Nuclear Power Generating Stations (Only Section 2.5 - Flame Tests, shall be applicable.) **IEEE 1202** - Standard for Flame Testing of Cables for Use in Cable Tray in Industrial and Commercial Occupancies **NEMA ICS-1** - Industrial Control and Systems General Requirements **NEMA RN1** - Polyvinyl Chloride (PVC) Externally Coated Galvanized Rigid Steel Conduit and Intermediate Metallic Conduit **UL 6** - Standard for Safety Electrical Rigid Metal Conduit - Steel **UL 6A** - Standard for Safety for Electrical Rigid Metal Conduit - Aluminum, Red Brass, and Stainless Steel **UL 13** - Standard for Power-Limited Circuit Cables **UL 2250** - Standard for Safety Instrumentation Tray Cable **UL 44** - Standard for Safety Thermoset Insulated Wires and Cables **UL 360** - Standard for Safety Liquid Tight Flexible Steel Conduit **UL 508** - Standard for Safety Industrial Control Equipment **UL 508A** - Standard for Safety Industrial Control Panels

	UL 514B - Standard for Safety Conduit, Tubing, and Cable Fittings **UL 1581** - Safety Reference Standard for Electrical Wires, Cables, and Flexible Cords **UL 1666** - Safety Test for Flame Propagation Height of Electrical and Optical-Fiber Cables Installed Vertically in Shafts **NEMA WC 55** - Instrumentation Cables and Thermocouple Wire - ICEA S-82-552 **NEMA WC 57** - Standard for Control Cables - ICEA S-73-532 **NEMA WC 70** - Non-shielded Power Cables Rated 2000 Volts or Less for the Distribution of Electrical Energy - ICEA S-95-658 **NEMA 250** - Enclosures for Electrical Equipment (1000 Volts Maximum) **NFPA 262** - Standard Method of Test for Flame Travel and Smoke of Wires and Cables for Use in Air-Handling Spaces
4 Design Requirements	
4.1 General	
4.1.1	Buyer will provide electrical service at the following voltages for Supplier's system, as applicable. The normal steady state voltage range for non-UPS supply is regulated within +/-10% and frequency is within +/-0.5 Hz. Low voltage: • 480 V, 60 Hz, 3 phase, 3 wire, solidly grounded
4.1.2	Transient voltage variations due to large motor starting, short circuits, disturbances from outside supplies, and their effect on plant operation cannot be avoided. The following criteria shall apply in such cases for non-UPS sources: a) Momentary voltage depression down to 80% of rated equipment voltage shall not affect equipment operations. b) Equipment having special requirements with respect to voltage and waveform shall be provided with a power supply adequately designed to meet the requirements.
4.1.3	Separation Requirements a) Internal enclosure wiring shall be neatly dressed in slotted non-metallic wireways. The wireway shall be securely fastened to the enclosure back-panel. Supplier shall provide non-metallic wireways on the opposite side of field terminations to be used by the Buyer. Adequate space shall be provided around terminal blocks to allow the Buyer to install, route and terminate cables. The field side wireway shall be designed for multi-core field cables with a minimum conductor size of # 14 AWG. b) Circuits of different voltages (service level) shall be terminated on physically separate terminal strips and clearly labeled to show the circuit voltage. Terminal blocks shall be segregated according to signal type. Pathways and entry points for Buyer's cables shall be identified. c) Not used. d) Instrumentation cables shall be terminated in separate junction boxes from the power and control cables.
4.1.4	The Supplier shall identify all loads with power requirements for Buyer's review and concurrence.
4.3 Instrumentation and Control Requirements	For instrumentation and control requirements, refer to Exhibit 8: Instrumentation for Packaged Systems.
4.5 Accessibility and Maintenance	Enclosures shall be accessible from the front with sufficient room for maintenance. Clearances for inward-facing electrical enclosures shall meet requirements in NFPA 70-1999, Articles 110.3(b), 110-26 & 110-34.
5 Construction	
5.5 Cables and Wiring	

5.5.1	Other than the special cables furnished by Supplier, cables shall be in accordance with the following: a) Low voltage power and control cables shall be stranded copper, 600 V type XHHW-2, THWN-2, RWH-2, MTW or Buyer-approved equivalent. b) For instrument cables (analog, digital circuits), thermocouple extension cables, data communication cables, fiber optic communication cable and other specialty cable, refer to Seller's standard. All power and control cables installed in cable trays or wireways shall meet the vertical tray flame test requirements of IEEE 383-1974 or IEEE 1202 or IEEE 1581. c) Not used. d) Conductors shall be sized and protected in accordance with NFPA 70-1999.
5.5.3	No more than two wires shall be connected to one terminal point unless installed in a NRTL listed, labeled, 508A or field evaluated enclosure. Internal wiring shall be continuous from terminal to terminal without splices (except devices with pig tails). Bridge or comb jumpers are preferred to wire jumpers on terminal strips. Jumpers shall not be installed on field side of the terminal strip. Approximately 10% spare terminals shall be included in the terminal blocks.
5.5.4	Where cables supplied and installed by Buyer are run to the package unit, the Supplier shall provide space for installing and terminating the cables.
5.5.5	Terminal blocks for connecting AC power into an enclosure shall support conductors sized from #12 AWG to #4 AWG (such as Allen Bradley 1492W16S)
5.6 Raceway System	
5.6.1.2	Liquid-tight flexible metallic conduit shall be to isolate the transmission of vibration to the conduit system, and for connection to equipment which may be periodically removed.
5.6.1.3	Liquid-tight flexible metallic conduit shall be supported and shall be secured per NEC requirements in accordance with Article 351 Section 351-8.
5.6.1.4	Conduit connections to terminal and junction boxes, enclosures & panels shall maintain the integrity & NEMA Rating of the enclosure, panel or J-box.
5. 7 Grounding	
5.7.4	Junction boxes and control cabinets shall be provided with grounding means in accordance with NFPA 70-1999, Article 250.
6 Tests and Inspections	
6.1 Shop Tests	
6.1.1	Insulation Resistance (Megger) test before termination of all wires pulled into conduit. a) 300V insulation shall be tested at 500VDC with an acceptable minimum resistance of 50 Meg-Ω. b) 600V insulation shall be tested at 1000VDC with an acceptable minimum resistance of 50 Meg-Ω.
6.1.3	Continuity check of all wiring for conformance with drawings.
6.1.4	Complete functional test of all apparatus and equipment.
6.1.6	For additional testing requirements, refer to primary specification and surveillance inspection requirements attached to Material Requisition/Purchase Order.
7 Preparation for Shipment	Packaging, shipping, handling and storage requirements associated with this exhibit shall be in accordance with applicable sections of the Purchase Order of the primary specification.
9 Documentation and Submittals	
9.1 General	The Supplier shall furnish the following documents as per form G-321E and G-321V in the subcontract or primary mechanical packaged equipment material requisition or purchase order (all drawings and data shall be in U.S. units).
9.1.1	Functional description of the electrical operation of the package.
9.1.2	Overall Single line diagram showing all electrical equipment.
9.1.3	Overall layout showing location of electrical equipment.
9.1.4	Interconnection diagram and cable schedule showing details of all internal connections and Buyer external connections. The Supplier's furnished cable schedule shall include service

	voltage and Class of Circuit per NEC Articles 725, 760 and 800 for each cable.
9.1.5	Individual equipment schematic diagrams, wiring diagrams, general arrangement drawings, foundation details and junction/terminal box details.
9.1.6	Material list with specific model number, manufacturer and catalogue cut sheets shall be submitted as part of the product data.
9.1.7	The Supplier shall include a list of all the electrical loads in the package, their individual consumption (in kW) and voltage level (in volts).
9.1.8	Recommended Spare Parts List
9.1.8.1	Supplier shall provide a list of recommended spare parts as follows: a) Startup/warranty spare parts - are those parts that may be required at any time during equipment installation, startup, testing, and unit operation through the warranty period. b) Operational spare parts - are those parts that require replacement at regular intervals to maintain continuous operation of the supplied equipment and/or system. c) Capital spare parts - are major parts or equipment that provide reliable equipment operation throughout the plant life and having a significant lead time for manufacturer and delivery.
9.1.8.2	The spare parts list shall include pricing and delivery information valid for one year after delivery of the equipment.
9.1.9	Test reports for tests listed in section 6 and as required by the primary specification.
9.1.9.3	Certificates and NRTL Field Inspection/Evaluation reports for the WTP Electrical AHJ acceptance and approval of the equipment inspected/evaluated.

Exhibit 2

Pressure Vessel Design and Fabrication

Specification 24590-WTP-3PS-MV00-T0001, Rev. 5 was used to create the following exhibit. Specification change notices (SCNs) have been evaluated and there are no applicable SCNs.

1 Scope	
1.1 Project Description and Location	This exhibit is included in the Purchase Order, Material Requisition or in the scope of work of subcontract packages. It defines the technical requirements for the design, fabrication, and testing of pressure vessels for the Hanford Tank Waste Treatment and Immobilization Plant (WTP) project located in the southeastern part of Washington State.
1.2 Acronyms and Definitions	
1.2.2	**Containment**: Components that contain active process fluids inside the plant process system. Refer to the MDS for the containment classification of components. • Primary Confinement: The boundary within which the process fluids, gases, and vapors are contained and confined during the plant process operation. In this document, the entire process vessel and nozzle walls are generally referred to as the Primary Confinement. • Primary Containment: The part of the Primary Confinement that is in contact with the process fluid. This is typically the wetted portion of the vessel wall below the top of the overflow. • Auxiliary Containment: This term is used in this document to identify the portion of a Primary Confinement that is not subject to a static pressure head of liquid but may be in contact with splashing liquid, vapor, or gases. This is typically the vessel components above the prescribed high operating liquid level. • Secondary Containment: The boundary that will contain process liquid if the Primary Containment is breached. This boundary will not normally be in contact with the process liquid. Typically, this is the cell liner or wall structure of the facility.
1.2.5	**Design Level**: Determines allowable nozzle reinforcement methods and nondestructive examination (NDE) requirements. Buyer assigns Design Levels on the MDS or Drawings.
1.2.6	**Drawings**: The Buyer's Drawings include the vessel general outline drawing and any associated standard drawings.
1.2.10	**MDS**: The Buyer's mechanical data sheet.
1.2.11	**NDE**: Nondestructive Examination
1.2.13	**Quality Level**: Establishes the quality assurance program requirements. Formerly, Quality Level also determined allowable nozzle reinforcement methods and NDE requirements. Refer to the Design Level for these requirements. Buyer assigns Quality Levels on the MDS or Drawings.
1.2.14	**SDDR**: Supplier Deviation Disposition Requests
1.2.15	**Seismic Category**: Classification of vessels defining the required condition, status, and operating function during and after a seismic event. The Seismic Category determines the analysis method and acceptance criteria appropriate for the intended service and safety function of the vessel. Buyer assigns Seismic Category on the MDS.
1.3 Conflicts	In cases of conflicts between this exhibit and other drawings or specifications, the Seller shall call attention to the conflict and request an interpretation by the Buyer.
1.4 Buyer's Responsibilities	Process parameters of the vessel for performance, capacity, or configuration are the Buyer's responsibility, and are not part of this exhibit.

1.5 Seller's Responsibilities	
1.5.1	Seller shall assume complete responsibility for the design, fabrication, testing, inspection, and documentation as required by the Buyer and detailed in the purchase order.
1.5.2	Buyer's review of the Seller's drawings, or release of the vessel for shipment by the Buyer's representative, shall in no way relieve the Seller of the responsibility for complying with all the requirements of this exhibit and the purchase order.
1.5.3	The Seller shall substantiate any necessary changes to the MDS, Drawings, specifications and purchase order and obtain approval from the Buyer.
2 Applicable Documents	
2.1 General	
2.1.1	Work shall be in accordance with the referenced codes, standards, and documents listed below, which are integral parts of this exhibit.
2.1.2	When specific chapters, sections, parts, or paragraphs are listed following a code, industry standard, or reference document, only those chapters, sections, parts, or paragraphs of the document are applicable and shall be applied. When more than one code, standard, or referenced document covers the same topic, the requirements for all must be met with the most stringent governing.
2.2 Codes and Industry Standards	
2.2.1	The Seller shall apply the latest issue, including addenda, at the time of request for quote or award as applicable for the following codes and industry standards with exceptions as noted.
2.2.1.1	ASME Section VIII, Division 1, *Rules for Construction of Pressure Vessels*, American Society of Mechanical Engineers
2.2.1.2	ASME Section II, *Materials*, American Society of Mechanical Engineers Use of later version of the code or standard directly comparable and equivalent in approach, Buyer approval is NOT required. If the later version of the code or standard is not directly comparable and essentially equivalent use of the later version requires AI's approval
2.2.1.3	ASME Section V, *Nondestructive Examination*, American Society of Mechanical Engineers
2.2.1.4	NBIC, *National Board Inspection Code*, National Board of Boiler and Pressure Vessel Inspectors
2.2.1.5	WRC-107, *Local Stresses in Spherical and Cylindrical Shells due to External Loading*, Welding Research Council
2.2.1.6	WRC-297, *Local Stresses in Cylindrical Shells due to External Loadings on Nozzles – Supplement to WRC Bulletin No. 107*, Welding Research Council
2.2.1.8	ASME Section VIII, Division 2, *Rules for Construction of Pressure Vessels - Alternative Rules*, American Society of Mechanical Engineers, (Note: Code year not later than 2004 Edition with 2005 and 2006 Addenda).
2.2.1.9	ASME B31.3, *Process Piping*, 1996, American Society of Mechanical Engineers
2.2.1.10	AISC M016, *ASD Manual of Steel Construction*, 9th Edition, American Institute of Steel Construction
2.2.1.11	ANSI/AISC N690, *Specification for the Design, Fabrication, and Erection Steel Safety-Related Structures for Nuclear Facilities*, American Institute of Steel Construction
2.2.1.12	SNT-TC-1A, *Recommended Practice No. SNT-TC-1A*, American Society for Nondestructive Testing, Inc. (Note: Refer to the Quality Assurance Program Requirements Data Sheet in the Purchase Order for acceptable editions).
2.2.1.13	ANSI/AWS D1.1, D1.6 Structural Welding Code
2.2.2	The Seller shall apply the issue and addenda as referenced in Table U-3 of ASME Section VIII, Division 1 for the following codes and industry standards:
2.2.2.1	ASME B16.5, *Pipe Flanges and Flange Fittings NPS 1/2 through NPS 24*
2.2.2.2	ASME B16.47, *Large Diameter Steel Flanges NPS 26 through NPS 60*
2.2.3	The Seller shall apply the issue and addenda as stated for the following codes and industry standards:

2.2.3.1	ASCE 7-98, *Minimum Design Loads for Buildings and Other Structures*, American Society of Civil Engineers
2.3 Related Documents	Other project specifications, standards, and standard details as listed or referenced in Section 2 of the purchase order shall be used as applicable for the design and fabrication of the vessels.
2.4 Project Documents	
2.4.1	Exhibit 6, *Seismic Qualification Criteria for Pressure Vessels*
2.4.3	Exhibit 4, *Positive Material Identification (PMI) for Shop Fabrication*
2.4.5	Exhibit 5, *Welding of Pressure Vessels, Heat Exchangers and Boilers*
2.4.7	24590-WTP-3PS-G000-T0003, *Engineering Specification for Packaging, Handling and Storage Requirements*
2.4.8	Exhibit 3, *Structural Design Loads for Seismic Category III and IV Equipment and Tanks*
3 Design Requirements	
3.1 Basic Requirements	
3.1.1	Unless otherwise specified, all vessels shall be designed and fabricated in accordance with ASME Section VIII, Division 1, any additional requirements of this exhibit, MDS, and the referenced Drawings.
3.1.2	Pressure vessels shall be U-stamped and registered with the NBIC. Any exceptions are indicated on the MDS.
3.1.3	Seller shall consider design details and material thickness shown on Drawings and MDS as the minimum requirements.
3.1.4	Seller shall not scale Drawings.
3.2 Loadings	
3.2.1	Seismic analysis shall be performed per the requirements of Exhibit 6, *Seismic Qualification Criteria for Pressure Vessels.*
3.2.4	Unless indicated otherwise on the MDS or Drawings, the Seller shall design the vessels to support process liquid filled to the top of the overflow.
3.3 Corrosion/Erosion Allowance	
3.3.1	Corrosion allowance is specified on the MDS and shall be applied to each surface exposed to process vapor or liquid. Internal piping shall have the specified corrosion allowance applied to both internal and external surfaces.
3.3.2	Unless otherwise specified, corrosion allowance shall not be applied to external vessel surfaces.
3.3.3	Erosion allowances, where required, will be specified in the MDS.
3.5 Supports and Anchors	
3.5.1	Seller shall provide vessel supports as illustrated on the Drawings.
3.5.3 Criteria	Detail design of vessel supports shall be in accordance with the recommendation of ASME Section VIII, Division 1, Appendix G, except as noted below.
3.5.3.2	For SC-IV vessels, the stresses for carbon steel vessel supports shall not exceed the allowable stress value for the material of construction per AISC M016, *Manual of Steel Construction* as tailored, and included in Appendix C. For combined loadings, see Exhibit 3, *Structural Design Loads for Seismic Category III & IV Equipment and Tanks*.
3.5.3.3	SC-IV stainless steel vessel supports are to be designed in accordance with the allowable stresses from N690 to the load combinations from Exhibit 3, *Structural Design Loads for Seismic Category III & IV Equipment and Tanks.*
3.6 Nozzles and Manways	
3.6.1	Nozzle wall thickness shall be per ASME Section VIII, Division 1 and at least that specified on the Drawings. Seller shall understand that minimum nozzle thicknesses indicated on the Drawings may not support the nozzle loading requirements listed in Appendix A.

3.6.2	Nozzles and manways and their reinforcements located on the head shall be located fully within the crown region of the head unless noted otherwise on the Drawing.
3.6.3	All nozzles shall be set-in type or through type with full penetration welds. All nozzles, which are flush with the inside surface of the vessel, shall be rounded to 1/8 inch minimum radius as shown below. Nozzles for pressure relief devices, vents, and drainage shall be flush with the inside surface of the vessel. Nozzles with internal projection in primary containment shall have an additional fillet weld between the internal projection and the inside surface of the shell or head.
3.6.5	Flange boltholes shall straddle natural vessel centerlines unless otherwise specified.
3.7 Nozzle Loading	
3.7.1	Unless otherwise specified, Seller shall design nozzles for the minimum nozzle design loads listed in the applicable table of Appendix A for the connected pipe size. Nozzles/shell are to be designed according to the methods of WRC-107, WRC-297 as a minimum.
3.7.2	Appendix A lists minimum design nozzle loads by nozzle size, connecting pipe material, and Seismic Category for weight, seismic, and thermal expansion cases. The coordinate system conforms to the 'right hand rule'. Loads provided in Appendix A do not have a sign convention; Seller must ensure that the direction of load application provides the most conservative stresses at the nozzle to shell or head junction. The Y-axis is vertical and in the direction of gravity regardless of the orientation of the nozzle. Loads act at the juncture of the nozzle and shell.
3.7.3	Nozzle load combinations to be considered for Primary and Secondary Stress in the design shall be: Weight + Seismic + Operating Pressure + Thermal Load (Appendix A) Note: Thermal Loads listed in Appendix A are from the loads resulting from the restrained free end movement of the attached pipe and are considered as primary loads per paragraph 4-138 of Appendix 4 of ASME VIII Division 2. With regard to the radial load, the internal pressure shall not be used to oppose the compressive stress due to the force acting inwards; for this load condition a null pressure condition is to be considered to exist. Nozzle load combinations to be considered for Secondary Stress in the design shall be: Weight + Operating Pressure + Thermal Load (Appendix A) + General Thermal (per code definition)
3.7.4	The nozzle loads provided are for the piping connected to the external nozzle. If a nozzle projects and is loaded internally to the vessel, design the nozzle for the sum of the internal and external loads.
3.7.5	The nozzle loads due to thermal expansion listed in Appendix A are estimated based on the operating temperature of 350 °F. If the maximum operating temperature of the attached pipe is less than 350 °F, the nozzle thermal loads may be reduced by a scale factor of the absolute value. of $\left\lvert \frac{X-70}{350-70} \right\rvert$ Where X is the maximum vessel operating temperature of the attached pipe.
3.8 Nozzle Reinforcement	
3.8.1	When required, suitable nozzle reinforcements must be provided. Reinforcement methods are limited depending on the assigned Design Level and cell designation. Refer to Section 6 for allowable reinforcement methods. If the wall thickness of the nozzle neck is greater than that of the connecting piping, the requirements of ASME Section VIII, Division 1, and Figure UW-13.4 shall be satisfied.

3.8.2	Nozzle reinforcing pads, where permitted, shall have one-piece construction (not segments). Nozzle insert plates (integral pads) shall be in accordance with ASME Section VIII with a 3 to 1 taper.
3.8.3	For external nozzle reinforcing pads, the pad thickness shall not exceed 1.5 times the thickness of the penetrated shell. To meet nozzle loading requirements, pad diameter may exceed the limits of reinforcement per ASME Section VIII, Division 1. Pad width shall be at least 2 inches but shall not exceed ten times the thickness of the pad. Each pad shall have single 1/8 inch nominal pipe size (NPT) telltale hole for testing purposes. On completion of all fabrication activities, the hole shall be fitted loosely with a screwed plug of the same material as the reinforcement plate.
3.8.4	The following illustrates acceptable reinforcement practices for nozzles irrespective of Design Level: 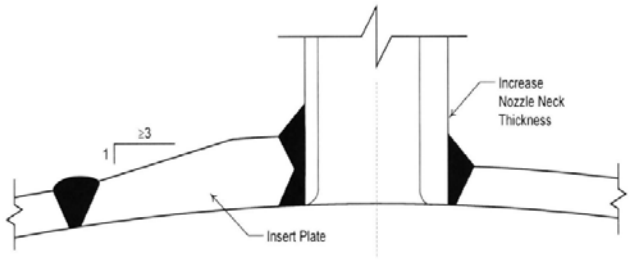 **Nozzle Reinforcement Methods** for All Design Levels
3.8.5	Nozzles on Commercial Grade vessels may use external reinforcing pads (See figure below). As a warning, the nozzle loads specified in Appendix A may exceed the practical use of repads. In such cases, the Seller should consider locally increasing the thickness of the shell or head with an insert plate or increasing the nozzle neck thickness as required. The following illustrates acceptable reinforcing practices with full penetration welds for nozzles on Commercial Grade vessels. 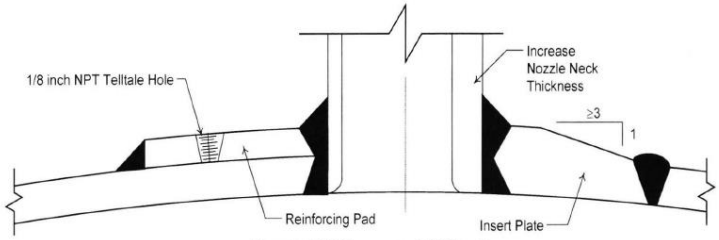 **Nozzle Reinforcement Methods** Only for Commercial Grade Vessels
3.8.6	Material used for nozzle reinforcement shall be the same as the parent vessel unless approved by the Buyer as stated on the MDS.
3.8.7	Structural reinforcing elements such as reinforcing rings or pads (integral or non-integral) can be used as necessary to accommodate new design load combinations on fabricated and partially fabricated vessels. Any butt-weld seams to be covered by the pads shall be ground flush and radiographically examined, in accordance with ASME Section VIII, Division 1, subdivision UW-51, before the reinforcing pads are welded in place. Reinforcing pads may be formed to the required shape by any process that will not unduly impair the physical properties of the material. Reinforcing pads shall be fitted to conform to the curvature of shell, head, or other surfaces to which they are attached to minimize flat spots and horizontal surfaces that could collect solids. Edges of non-integral pads shall be tapered 3 to 1 minimum to match the height of the legs of the attaching fillet welds. The fillet welds shall fully seal the dead space between the pad and the shell, head, or other surfaces to which the pad is attached.
3.9 Internal Components and Supports	
3.9.1	Design of support members for vessel internals shall be the responsibility of the Seller.

3.10 External Components and Supports	
3.10.2	Lifting and tailing lugs shall be provided and installed by the Seller per the Drawings. The Seller may propose alternate designs and submit SDDR for Buyer approval prior to detail design.
3.10.3	The Seller is responsible for determining the necessity of stiffening rings. The material shall match the material of the shell and attachment welds shall be continuous on both sides of the ring. Reinforcement Pads for nozzles, guides etc., shall match the material of parent vessel.
3.10.6	Seller shall provide all vessels with a nameplate of Type 300 stainless steel attached securely on a bracket welded to the vessel at the location indicated on the Drawings. The bracket shall be the same material type as the adjoining vessel shell. The nameplate shall be in accordance with the specified Drawing.
3.10.9	The external supports skirts, legs, saddle, lugs etc., shall be designed in accordance with AISC M016 for carbon steel or N690 for Stainless Steel Structures. The support at the discontinuity and with vessel is within the code pressure boundary and shall be designed per ASME Section VIII.
4 Materials	
4.1 General	
4.1.1	Materials shall be new and free from defects. Classification of fabrication materials shall be in accordance with ASME Section II. The Seller shall furnish legible copies of the mill test reports from the manufacturer for materials comprising the Primary Confinement, internals, supports, and welded attachments. Other materials shall be provided with certified statements that the material meets the requirements of ASME Section II.
4.1.2	Material shall be furnished to the specification and grade shown on the MDS. The fabricator shall not substitute materials without written approval from the Buyer.
4.1.3	Contact materials including marking materials, temperature indicating crayons, adhesive backed and pressure sensitive tape, and barrier and wrap materials may be used only under the following limits: • The total halogen content shall not exceed 200 parts per million (PPM) • The total sulfur content shall not exceed 400 PPM • No intentionally added low melting point metals such as lead, zinc, copper, tin, antimony, and mercury. Anti spatter compounds shall not contain chlorine, fluorine, sulfur, mercury or other low melting point metals. Materials and residue shall be completely removed when no longer required. Cleaning materials may be non-halogenated solvents or potable water containing no more than 50 PPM chloride. Contact materials shall be controlled and documented in accordance with the Seller's inspection and test plan as approved by the Buyer.
4.1.4	Seller shall maintain a positive system of identification of materials used in the fabrication of each vessel per Exhibit 4, *Positive Material Identification (PMI) for Shop Fabrication*.
4.2 Pipe Fittings	Pipe fittings shall conform to the appropriate ASME and ANSI standards for materials and dimensions unless otherwise stated in the purchase order.
5 Fabrication	
5.1 General	
5.1.1	Seller shall, if necessary, provide temporary stiffening and jigging to prevent shell distortion during fabrication, welding processes, heat treatment, hydrostatic testing, or shipment.
5.1.2	Fabrication tolerances shall be in accordance with ASME Section VIII, Division 1.
5.1.3	The sequence of fabrication shall be planned to permit maximum access to the internal surfaces to enable examination of all welds.

5.1.4	Plates and pipes shall be cut to size and shape by machining, grinding, shearing, plasma, laser, or water jet cutting. Plates, 3/8 inch thick and above, cut by shearing, shall either be dye penetrant tested on the sheared edge or have 3/8 inch allowance left on the edges which shall be removed by machining or grinding. All thickness of plate or pipe cut by air plasma cutting shall have the edges dressed to a smooth, bright finish. Material cut by the inert gas shielded plasma, laser or water jet process will not require further dressing other than deburring. All lubricants, burrs, and debris shall be removed after cutting.
5.1.5	All stamps used for identification reference markings shall be of the low stress type. Stampings shall not be located near discontinuities.
5.1.6	If a butt welded seam is required between materials of different thickness, the thicker material shall normally be machined on the side away from the process liquid. Machining shall ensure a smooth finished profile with no sharp corners and shall be in accordance with ASME Section VIII, Division 1.
5.1.8	Only stainless steel brushes, clean iron-free sand, ceramic, or stainless steel grit shall be used for cleaning stainless steel or nonferrous alloy surfaces. Cleaning tools or materials shall not have been previously used on carbon steel.
5.2 Layout	
5.2.4	Saddles shall be continuously welded to the shell. Welded seams under the saddle or wear plate are not permitted. Longitudinal weld seams in the shell should not be located within 15 degrees of the horn of the saddle or wear plate.
5.2.6	Structural attachment welds such as internal support rings or clips, external stiffening rings, insulation support rings, and ladder, platform or pipe support clips shall clear weld seams by a minimum of 2 inches. If overlap of pad type structural attachments and weld seams is unavoidable, the portion of the seam to be covered shall be ground flush and radiographically examined before the attachment is welded. The seam shall be radiographed per ASME Section VIII, Division 1, Paragraph UW-51 for a minimum distance of 2 inches beyond the edge of the overlapping attachment. Any protrusion through the weld seam when unavoidable shall be radiographically examined after completing the joint weld for at least minimum distance of 8 times the thickness of thicker material at protrusion. Radiographic examination of longitudinal weld seams is not required when single plate edge type attachments such as tray support rings, stiffening rings, insulation support rings, ladder, platform, or pipe support clips cross such weld seams.
5.3 Nozzles, Manways, and Reinforcing Pads	
5.3.1	For forged nozzles connecting to pipe of lesser wall thickness, the Seller shall prepare the nozzles per ASME Section VIII, Division 1, Figure UW-13.4.
5.4 Welding Requirements	
5.4.1	Seller shall comply with Exhibit 5, *Welding of Pressure Vessels, Heat Exchangers and Boilers*.
5.4.2	All welding shall be continuous. Stitch welding is prohibited.
5.4.3	Joints shall be assembled and retained in position for welding. The use of manipulators or other devices to permit welding in the flat position should be employed where practical.
5.4.4	All attachments such as lugs, brackets, nozzles, pads and reinforcements around openings and other members (when permitted) shall follow the contour and shape of the surface to which they will be attached. The gap at all exposed edges to be welded shall not exceed the greater of 1/16 inch or 1/20 of the thickness of the attachment at the point of attachment.
5.4.5	Where fillet welds only are used, the maximum gap between the components being joined shall be 1/8 inch. The components shall be clamped or otherwise maintained together during welding.
5.4.6	Attachment point of spiders, braces, or other temporary attachments shall match the material of the vessel.
5.4.7	All temporary attachments shall be removed prior to shop hydrotest unless specifically approved by the Buyer.
6 Design and NDE Requirements	

6.1 All Design Levels	
6.1.4	Records of the NDE and other tests shall be submitted to the Buyer as described in the purchase order.
6.1.6	Additional NDE requirements are specified in the drawings and MDS.
6.4 Additional Requirements for Commercial Grade (CM) Vessels	
6.4.1	Nozzles may use either a pad or integral reinforcement.
6.4.2	The following weldments shall be subject to volumetric testing unless otherwise indicated on the MDS or Drawings: • At least 10 percent of the length of each welder's production of vessel main seams butt welds. The minimum extent of volumetric testing shall include all "T" junctions and 10 percent of the remaining longitudinal weld with a 6 inch minimum length of volumetric testing. • For nozzle-to-shell welds located in the Primary Containment, at least 10 percent of the number of welds made by each welder over 100 percent of its circumference. • At least 10 percent of butt welds in internal piping for the full circumference. Radiography is the preferred method of volumetric testing. The SDDR shall include UT procedure reference, technical justification of UT proposal for every weldment and schematic location of every weldment proposed to be UT tested.
7 Tests and Inspections	
7.1 Hardness Testing for Austenitic Stainless Steel Components	
7.1.1	Hardness testing is required when austenitic stainless steel plates are cold formed to make sections such as angles, channels, and conical sections. This requirement is not applicable to the cold forming of dished heads, which is covered by the relevant section of ASME Section VIII, Division 1.
7.1.2	Hardness testing is required when austenitic stainless steel pipe is cold formed for bends with a centerline radius less than three times the nominal pipe diameter.
7.1.3	Any cold forming process, which may significantly increase hardness, shall be in accordance with an approved procedure, which contains hardness testing. The procedure shall be submitted for Buyer's approval.
7.1.4	Hardness testing shall be performed on areas subject to the greatest deformation after cold working or any rework or rectification. The maximum permitted hardness is HRB 92 or as indicated by the material specification acceptance criteria for hardness.
7.1.5	If the maximum permitted hardness is exceeded, the Seller shall solution anneal (heat treatment) in accordance with the applicable ASME specification for that material. Heat Treatment process shall include heating and cooling rates, thermocouple locations, and type of heating equipment. Seller shall submit a written procedure for suitable heat treatment and testing for Buyer's approval.
7.2 Nondestructive Examinations	
7.2.1	Radiography, visual examination, and dye penetrant examination, where specified or required, shall be performed in accordance with ASME Section VIII, Division 1 and ASME Section V, and procedures developed and submitted to the Buyer for review prior to use.

7.2.2	All mandatory nondestructive examination (visual, surface flaw, and volumetric) shall be carried out after the completion of fabrication, including any heat treatment. Where Seller carries out additional nondestructive examination prior to any heat treatment process, such examinations shall be included in the Quality Plan or Inspection Schedule. The Buyer's representative need not witness this additional nondestructive examination; however, the records of such inspection shall be made available to the Buyer's representative.
7.2.3	Nondestructive examination must be performed by an inspector certified to the requirements of SNT-TC-1A. The interpretation of the results shall be by either Level II or Level III inspectors certified to SNT-TC-1A. Visual examination is not included in this requirement.
7.2.3.1	All weld visual examinations shall be performed by personnel certified in accordance with American Society for Non-Destructive testing (ASNT) Recommended practice SNT-TC-1A, Level I, II, or III or certified in accordance with AWS QC-1 as either a Certified Welding Inspector (CWI) or a Senior Certified Weld Inspector (SCWI).
7.2.5	Radiographic acceptance criteria shall be in accordance with ASME Section VIII, Division 1, Paragraph UW-51 where full radiography is required or UW-52 where spot radiography as defined in this exhibit is per Section 6.4.2.
7.2.7	Dye Penetrant testing, where specified by the Buyer or proposed by the Seller, shall be in accordance with Appendix 8 of ASME Section VIII, Division 1.
7.2.9	Weld visual examination, where specified by the Buyer or proposed by the Seller, shall be in accordance with ASME Section V, Article 9.
7.2.10	Fillet Weld Measurement: • A fillet weld leg size specified on the drawing weld symbol is the minimum size required 360 degrees around the nozzle/attachment. The effective throat based on that fillet size must be fully met around that circumference, including the obtuse (downhill) location. Both leg and throat dimensions must be met as an example, for a specified fillet weld leg size of 1/4", the throat thickness on the obtuse side as shown in the figure below is NOT acceptable (less than 0.707 x 1/4") and consequently the actual leg size must be increased on the obtuse side to meet an effective throat thickness of 0.707 x 1/4". For angles greater than 135 degrees, submit an SDDR for buyer review and approval. Fillet weld design is applicable between 60 degrees and 135 degrees (per AWS D1.1 , Section 16, D1.6 Annex B) any weld outside these limits is not considered a fillet weld and shall be designed accordingly. 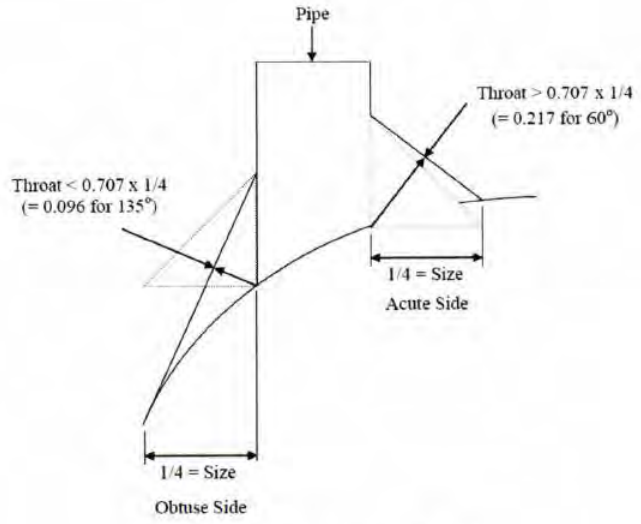 Off Set Nozzle Fillet Weld
7.3 Hydrotests	

7.3.1	If paint is specified, the vessel shall not be painted prior to the pressure test. Coating shall not be applied to external welds of items requiring leak/hydrostatic testing prior to testing.
7.3.2	All welds shall be sufficiently cleaned and free of scale or paint prior to hydrostatic testing.
7.3.3	Testing of vessels or components made of austenitic stainless steel materials shall be conducted with potable water containing no more than 50 PPM chloride.
7.3.4	For vessels of carbon and low alloy steel, before application of the test pressure, the test water and the vessel material shall be allowed to equalize to approximately the same temperature. The temperature of the pressure resisting components during the pressure test, regardless of test media, shall be at least 30 °F warmer than the minimum design metal temperature to be stamped on the nameplate, but need not exceed 120 °F.
7.3.5	The final hydrostatic test pressure shall be held for a minimum of one hour.
7.3.6	After completion of the hydrostatic test, the vessel shall be drained, dried, cleaned thoroughly inside and outside to remove grease, loose scale, rust, and dirt and closed as quickly as practicable. Test water shall not be in contact with austenitic stainless steel for more than 72 hours, unless treated with an appropriate biocide.
7.3.7	If field assembly or erection is involved, the final hydrostatic test shall be at the job site. The Seller or the field subcontractor shall provide the Buyer with a detailed test procedure for review and approval prior to testing.
7.3.8	A horizontal vessel shall be tested while resting on its support saddles without additional supports or cribbing.
7.3.9	Tall vertical vessels may be shop hydrotested in the horizontal position. The vessel shall be designed for vertical hydrotest loading. These vessel supports must be adequately designed to support the vessel (in accordance with the ASME code) during the hydrotest to prevent damage.
7.3.12	Seller shall submit a hydrostatic test procedure in accordance with the requirements of Section 7.3 of this exhibit and ASME Section VIII, Division 1, Paragraph UG-99 for buyer review prior to use.
7.4 Leak Tests	
7.4.1	If gas or pneumatic testing is specified in the MDS, Drawings or in the purchase order, the Seller shall conduct the tests in accordance with ASME Section V. Seller shall submit a test procedure for Buyer review prior to use.
7.4.2	Reinforcing pad attachment welds and accessible surfaces of inside nozzle to vessel wall welds shall be tested for leaks with 15 PSIG dry air or nitrogen and bubble forming solution. This test shall be performed prior to the final hydrostatic or pneumatic test as applicable.
7.6 Final Inspection of Completed Vessel	
7.6.1	Final inspection of the completed vessel shall be the sole responsibility of the Seller. The finished dimensions and cleanliness of the vessels shall comply with the relevant Drawings and specifications after completion of all tests.
8 Preparation and Shipment	
8.1 Cleaning	
8.1.1	Seller shall comply with 24590-WTP-3PS-G000-T0003.
8.1.2	If specified in the purchase order and in any event following hot working or heat treatment, the equipment shall be descaled. The procedure to be used by Seller shall be submitted for Buyer's prior approval.
8.1.3	If blast (mechanical) descaling process is specified in the purchase order for stainless steel construction, clean and iron-free glass or ceramic beads, or sand of alumina or zirconia type shall be used. The type, grade, and chemical composition of the abrasive shall be submitted for Buyer's approval prior to its use. Recycling of abrasive is prohibited. Blast cleaning shall not be used on weld metal or as a final finish on fabrications.
8.2 Packaging	
8.2.1	Machined carbon steel surfaces, which are not protected by blind flanges, shall be coated with rust preventative. Rust preventative coating shall be approved by Buyer.

8.2.2	All flanged openings, which are not provided with a cover, shall be protected by an ASME B16.5 or B16.47 carbon steel blind flange of the same rating as the flange, a full faced rubber gasket with a minimum thickness of 1/8 inch and carbon steel bolts with stainless steel washers.
8.2.3	For internal parts, suitable supports shall be provided to avoid damage during shipment. Temporary internal bracing shall be painted yellow and a label, located near the nameplate shall state that the vessel contains temporary bracing that must be removed.
8.2.4	Small parts, which are to be shipped loose, shall be bagged or boxed and marked with the order and plant item number of the vessel.
8.3 Shipping	
8.3.1	Seller shall take all necessary precautions in loading by blocking and bracing the vessel and furnishing all necessary material to prevent damage.
8.3.2	The Seller shall verify, by calculation, that the vessel and internals will withstand loads occurring during shipping for the chosen mode of transportation. The Buyer shall inform the Seller of the chosen mode of transportation
9 Documentation and Submittals	
9.1	Seller shall comply with the requirements of forms G321-E and G321-V of the material requisition or subcontract. Furnish all applicable drawings, MDS, design calculations, reports of special analyses, welding procedure specifications with procedure qualification records, test procedures, and all other required documents.
9.2	Design calculations shall include relevant ASME Section VIII, Division 1 formulas, and source paragraphs, values used in the formulas, the calculated results, and comparison with acceptable values. Where calculations are based on other than the ASME Section VIII, Division 1 formulas, the source of the formulas shall be referenced. Where a computer program is used for calculations, a brief program description shall be given, including name and version of the program. If the program is not commercially available to industry, Seller shall maintain and provide, upon request, program documentation. Calculations shall include, but not be limited to: • Code calculations • Nozzle neck calculation per UG45, average primary stress Pm across the nozzle wall • Seismic calculations including base horizontal seismic force and moment and loads for anchorage and anchor bolt design • Support calculations including empty weight, operating weight and location of center of gravity • Calculations associated with lifting and erection of the vessel • Nozzle load analysis for local and gross effect, per Section 3.7 above, or by other approved method • Design of attachments, both internal and external • Thermal and discontinuity stresses as applicable • Fatigue analysis as applicable for vessels in fatigue services
9.2.1	Seller shall submit an Outline drawing for each item. The Outline drawing shall include the following minimum for each item: • Shell and head thickness • Head type • Vessel empty weight, test weight and shipping weight • Center of Gravity • Lifting lugs and tailing lugs • Diameter, tangent-to-tangent dimensions and appropriate support details • Nozzle, flange support locations from datum point • Nozzle schedule with nozzle marks and service conditions • All appropriate design conditions, NDE and materials of construction • Foundation/Mounting details

	• Installations of appropriate internals
9.3	Seller shall make a complete set of Buyer approved drawings and other documents available to the Buyer's representative at the time the quality surveillance activities are being conducted.
9.4	All records pertaining to the nondestructive examination, base materials, filler materials, fabrication, and inspection shall be traceable to the area and part inspected and is accessible for Buyer's examination.
9.5	Seller shall provide ASME Section VIII, Division 1 data reports per ASME Section VIII Division 1, Paragraph UG-120.
9.6	Seller shall submit assembly drawings and shop detail drawings for buyer's review. These drawings shall include bill of materials, weld symbol, and NDE for each weld, and parts used in vessel construction. Assembly and shop detail drawings shall also include shell and head plate layout (including nozzles) for compliance with Section 5.2 of this exhibit.
9.7	Seller shall provide a detailed description of their work inspections and tests planned during the receipt of materials, manufacturing, testing, and conformance verification activities. This shall include identification of Bechtel and supplier witness and hold points.
9.8	Seller shall supply quality records and test results in accordance with the G321 V form of the Material Requisition to include the following.
9.8.1	Document Category 16.0 Heat Treat Reports - in accordance with section 7.1 of this exhibit. A complete record of any applicable heat treatment including charts.
9.8.3	Document Category 20.0 Radiographic Examination and Verification Reports - in accordance with Section 7.2.5 of this exhibit.
9.8.4	Document Category 20.1 RT Film and Reader Sheets - Seller shall submit the original set of radiographic film with associated technique and reader sheets for radiographic tests performed. Radiographic film must be suitably packaged to preclude moisture and handing damage.
9.8.6	Document Category 22.0 Liquid Penetrant Examination and Verification Reports - in accordance with Section 7.2.7 of this exhibit.
9.8.7	Document Category 24.0 Pressure Testing and Verification Reports • Hydrostatic Leak Testing in accordance with section 7.3 of this exhibit. • Gas or Pneumatic Testing in accordance with section 7.4 of this exhibit.
9.8.8	Document Category 25.0 Inspection and Verification Report • Final dimensional verifications comply with Section 7.6 of this exhibit. • Visual Weld Inspections in accordance with Section 7.2.9 and 7.2.10 of this exhibit. • Hardness Test report (if applicable) in accordance with Section 7.1 of this exhibit.
9.8.9	Document Category 26.1 Mechanical Test Report • Load testing, • Obstruction documentation per Section 7.5 of this exhibit.
10 Quality Assurance	
10.1 General Requirements	
10.1.3	Seller's QA P, as a minimum, shall contain the requirements detailed in the Supplier Quality Assurance Program Requirements Data Sheets listed in Part 2 of the material requisition.

Appendix A

Horizontal Shell Top Nozzle

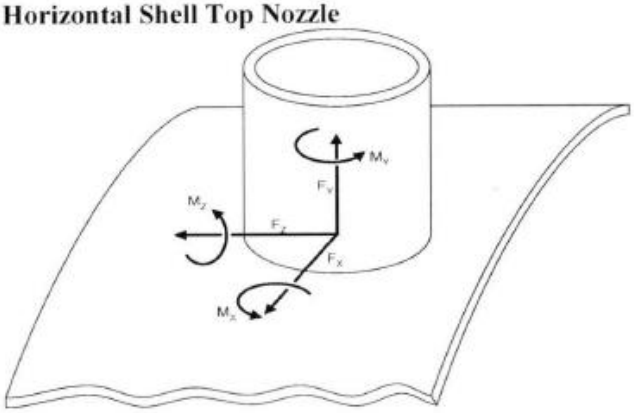

Horizontal Shell. Bottom Nozzle

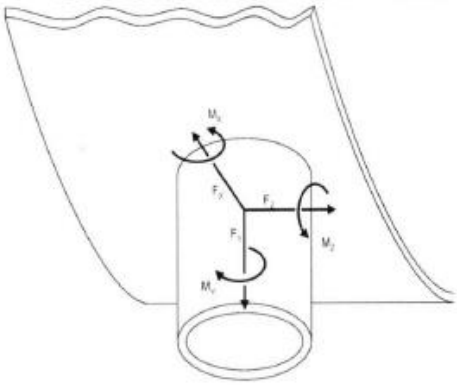

Vertical Shell Horizontal Nozzle

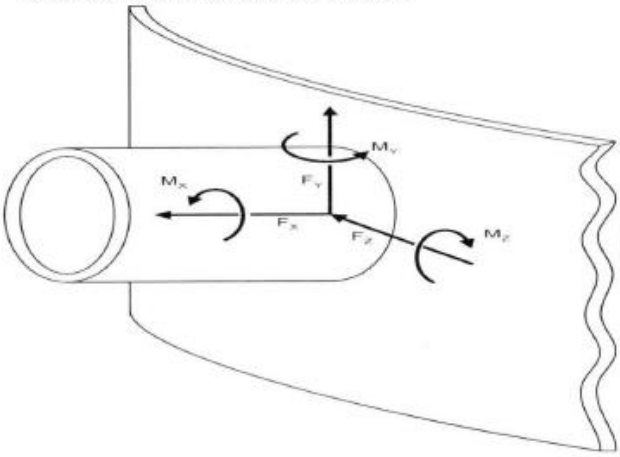

Horizontal Head Nozzle

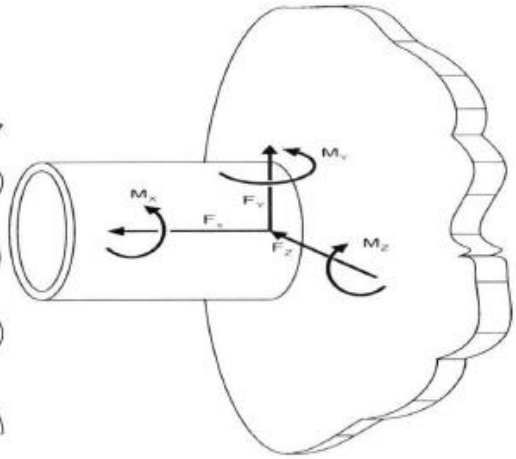

Vertical Bottom Head Nozzle

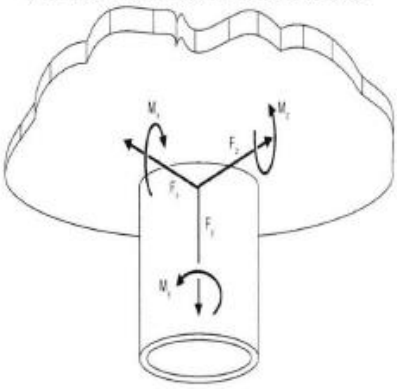

Vertical Top Head Nozzle

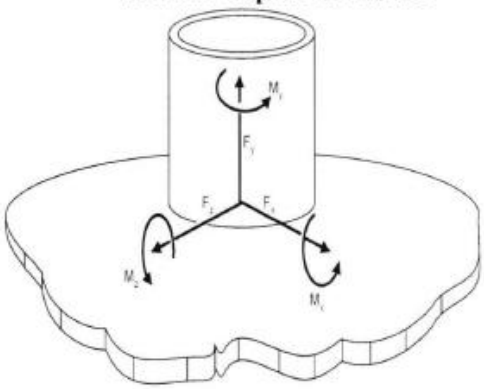

Table A2- Minimum Nozzle Loads Due to Stainless Steel Piping on Vessels Designated as SC-II, III, and IV

Pipe Size	Load Type	Forces			Moments		
		Fx (lb)	Fy (lb)	Fz (lb)	Mx (ft-lb)	My (ft-lb)	Mz (ft-lb)
1 in	Weight	10	16	10	11	7	7
	Seismic	66	44	66	92	137	137
	Thermal	28	24	38	38	77	77
1-1/2 in	Weight	20	32	20	26	16	16
	Seismic	138	92	138	228	342	342
	Thermal	58	52	78	96	192	192
2 in	Weight	34	56	34	46	29	29
	Seismic	244	162	244	398	597	597
	Thermal	104	92	138	169	337	337
3 in	Weight	71	113	71	180	112	112
	Seismic	491	327	491	1570	2350	2350
	Thermal	209	185	278	664	1330	1330
4 in	Weight	120	192	120	342	214	214
	Seismic	834	557	834	2960	4440	4440
	Thermal	356	317	474	1260	2520	2520
6 in	Weight	290	462	290	951	595	595
	Seismic	2025	1350	2025	8290	12400	12400
	Thermal	875	777	1170	3580	7160	7160
8 in	Weight	333	534	333	1210	758	758
	Seismic	2360	1580	2360	10700	16000	16000
	Thermal	1050	938	1410	4800	9590	9590
10 in	Weight	361	578	361	2210	1380	1380
	Seismic	2540	1690	2540	19400	29100	29100
	Thermal	1110	991	1490	8500	17000	17000
12 in	Weight	502	803	502	3240	2020	2020
	Seismic	3510	2340	3510	28100	42100	42100
	Thermal	1550	1380	2070	12400	24800	24800
14 in	Weight	591	946	591	3870	2420	2420
	Seismic	4160	2780	4160	33900	50900	50900
	Thermal	1850	1640	2460	15000	30100	30100
16 in	Weight	757	1210	757	5080	3180	3180
	Seismic	5310	3540	5310	44100	66100	66100
	Thermal	2380	2120	3180	19800	39500	39500
18 in	Weight	1200	1930	1200	8190	5120	5120
	Seismic	8490	5660	8490	71500	107000	107000
	Thermal	2990	2660	3980	25200	50300	50300
20 in	Weight	1280	2050	1280	8630	5400	5400
	Seismic	8910	5940	8910	75900	114000	114000
	Thermal	3660	3260	4880	31200	62400	62400
22 in	Weight	1380	2200	1380	9380	5860	5860
	Seismic	9510	6340	9510	81500	122000	122000
	Thermal	4420	3930	5900	37900	75800	75800
24 in	Weight	1600	2570	1600	11000	6870	6870
	Seismic	11100	7430	11100	96100	144000	144000
	Thermal	5240	4660	6990	45200	90400	90400

Note: Unless otherwise specified on the MDS utilize the minimum nozzle loads specified

Table A4- Minimum Nozzle Loads Due to Carbon Steel Piping on Vessels Designated as SC-II, III or IV

Pipe Size	Load Type	Forces			Moments		
		Fx (lb)	Fy (lb)	Fz (lb)	Mx (ft-lb)	My (ft-lb)	Mz (ft-lb)
1 in	Weight	10	16	10	13	8	8
	Seismic	68	46	68	110	166	166
	Thermal	32	30	44	53	106	106
1-1/2 in	Weight	20	32	20	31	20	20
	Seismic	140	92	140	275	412	412
	Thermal	68	60	90	132	265	265
2 in	Weight	34	54	34	55	34	34
	Seismic	234	156	234	480	721	721
	Thermal	114	100	150	232	465	465
3 in	Weight	62	99	62	176	110	110
	Seismic	482	321	482	1910	2870	2870
	Thermal	231	206	308	915	1830	1830
4 in	Weight	104	167	104	335	209	209
	Seismic	804	536	804	3610	5420	5420
	Thermal	387	344	516	1740	3480	3480
6 in	Weight	243	389	243	949	593	593
	Seismic	1860	1250	1860	10200	15200	15200
	Thermal	906	806	1210	4930	9870	9870
8 in	Weight	353	564	353	1450	903	903
	Seismic	2690	1800	2690	13400	20200	20200
	Thermal	1320	1180	1770	6610	13200	13200
10 in	Weight	384	615	384	2600	1630	1630
	Seismic	2920	1950	2920	23700	35600	35600
	Thermal	1450	1290	1930	11700	23400	23400
12 in	Weight	567	908	567	4150	2590	2590
	Seismic	4310	2880	4310	37100	55600	55600
	Thermal	2140	1910	2860	18400	36800	36800
14 in	Weight	707	1130	707	5400	3380	3380
	Seismic	5380	3590	5380	48100	72200	72200
	Thermal	2670	2380	3570	23900	47900	47900
16 in	Weight	980	1570	980	8040	5020	5020
	Seismic	7450	4970	7450	71900	108000	108000
	Thermal	3700	3290	4940	35800	71500	71500
18 in	Weight	1300	2080	1300	11300	7090	7090
	Seismic	9890	6590	9890	102000	152000	152000
	Thermal	4950	4400	6600	50900	102000	102000
20 in	Weight	1640	2630	1640	14900	9330	9330
	Seismic	12500	8320	12500	132000	198000	198000
	Thermal	6300	5600	8400	66500	133000	133000
22 in	Weight	1900	3040	1900	15400	9620	9620
	Seismic	14400	9610	14400	135000	203000	203000
	Thermal	7330	6520	9770	68800	138000	138000
24 in	Weight	2510	4020	2510	24800	15500	15500
	Seismic	19000	12700	19000	217000	326000	326000
	Thermal	9760	8680	13000	111000	222000	222000

Note: Unless otherwise specified on the MDS utilize the minimum nozzle loads specified

Exhibit 3

Structural Design Loads for Seismic III & IV Equipment and Tanks

Specification 24590-WTP-3PS-FB01-T0001, Rev. 6 was used to create the following exhibit. Specification change notices (SCNs) have been evaluated and there are no applicable SCNs.

1 Scope	
1.1 General	This exhibit provides structural design loads for Seismic Category III (SC-III) and Seismic Category IV (SC-IV) equipment and tanks on the River Protection Project – Waste Treatment Plant (RPP-WTP) located at the Department of Energy (DOE) Hanford Site in Richland, Washington. The seismic categories are derived from the performance categories defined in DOE-STD-1020-94 (Ref. 2.7). This specification also defines the seismic design load for SC-III qualification testing. The loads include dead, live, wind, fluid, earthquake, snow, ashfall, lateral earth pressure, operating pipe reaction, and thermal loads. This exhibit is to be used in combination with the Equipment/Tank Technical Specifications, which may include supplemental codes applicable to the specific Structure, System, or Component (SSC). In case of conflicts between this exhibit and other technical requirements in the Equipment/Tank Technical Specifications, the Seller shall identify such conflicts to the Buyer in writing and obtain resolutions documented in writing. These conflicts may also include inconsistency of load definitions, conditions and combinations as specified by the referenced codes and standards.
1.2 Definitions	EQUIPMENT: Mechanical, electrical, or control system component or element that is part of a mechanical and/or electrical system. SC-IV EQUIPMENT/TANK: Equipment/Tank required to be designed for the SC-IV loads and load combinations provided in this exhibit. This includes equipment/tank assigned SC-IV for seismic design per the facility-specific Preliminary Documented Safety Analysis (PDSA) document or Documented Safety Analysis document.
2 Applicable Documents	For the codes and standards listed below, the specific revision or effective date identified, as well as the specific revision or effective date of codes and standards that they incorporate by reference (daughter codes and standards), shall be followed. The effective dates and revisions listed in Section 2 shall apply to subsequent references to the codes and standards within this exhibit.
2.1 American Concrete Institute (ACI)	ACI 318-99 Building Code Requirements for Structural Concrete and Commentary.
2.2 American Concrete Institute (ACI)	ACI 349-01 Code Requirements for Nuclear Safety related Concrete Structures and Commentary.
2.3 American Institute of Steel Construction (AISC)	AISC M016-89 Manual of Steel Construction — Allowable Stress Design, Ninth Edition.
2.4 American Society of Civil Engineers (ASCE)	Manuals and reports on Engineering Practice; No. 78, Structural Fire Protection, ASCE 1992.
2.5 American Society of Civil Engineers (ASCE)	Minimum Design Loads for Buildings and Other Structures, ASCE 7-98.
2.6 American Society for Testing and Materials (ASTM) International	Material for steel anchor bolts, ASTM F1554 grade 36, unless specified otherwise on the design drawings.
2.7 Department of Energy (DOE)	DOE-STD-1020-94 (Including Change Notice #1 dated Jan 1996) Natural Phenomena Hazards Design and Evaluation Criteria for Department of Energy Facilities.
2.9 International Conference of Building Officials (ICBO)	Uniform Building code, UBC-97
2.15 American Society of Mechanical Engineers	ASME Boiler and Pressure Vessel Code, Section II, Part D, Subpart 1 (Any edition of the code between 1995 and current edition)

(ASME)	
3 Methodology	Methodology used in the seismic design of Seismic Category III & IV equipment and tanks shall be as defined in the Equipment/Tank Technical Specifications and the supplemental codes applicable to the SSC. For SC-IV equipment designed to UBC-97 (Ref. 2.9) Section 1632, attachments for floor or roof mounted equipment weighing less than 400 pounds need not be designed. Stainless Steel supports for Quality Level Q equipment shall be qualified using the allowable stresses from ANSI/AISC N690-1994 (Ref 2.11) and the load combinations from section 5.1 of this specification. Stainless Steel Supports for Commercial Grade (CM) equipment shall be qualified using the allowable stresses from either ANSI/AISC N690-1994 (Ref 2.11) or AISC M016-89 (Ref 2.3) and the load combinations from section 5.1 of this exhibit.
4 Design Loads	
4.3 Earthquake Loads	
4.3.1	Earthquake loads on equipment and tanks supported by structures shall be calculated per the provisions of UBC-97 (Ref 2.9), Section 1632, using the following parameters: I_p = 1.0 For SC-IV equipment tanks C_a = 0.24 a_p = 1.0 for rigidly mounted rigid* equipment = 2.5 for flexible equipment** and flexibly mounted rigid equipment = 1.0 for tanks * Rigid equipment are defined as those with a fundamental period of less than or equal to 0.06 seconds (≥17Hz). ** Flexible equipment are defined as those with a fundamental period of greater than 0.06 seconds (<17Hz). R_p = 3.0 To be used when equipment is attached directly to structural steel = 1.5*** To be used by suppliers unless otherwise specified on the Equipment/Tank Specification *** Based on actual conditions and location, Buyer's Civil, Structural, Architectural (CSA) personnel may approve an R_p of 3.0 in calculations.
4.3.2	Earthquake loads for self-supporting tanks (i.e. supported on their own foundation) shall be calculated per the provisions of UBC-97 (Ref. 2.9), Section 1634, using the following parameters: I = 1.0 for SC-IV tanks C_a = 0.24 C_v = 0.32
4.4 Dead Loads	Dead loads include the weight of permanent equipment/tanks as well as their Attachments.
4.5 Live Loads on Equipment-Supported and Tank-Supported Platforms and Walkways	Platforms and Walkways - 100 psf Stairs treads - 100 psf or 300 lbs. concentrated loads applied over an area of four (4) square inches, whichever load produces greater effect on equipment. Handrails for stairs and platforms - Per Table 16B of UBC-97 (Ref. 2.9)
4.6 Thermal Loads	
4.6.1 Base Temperature	The base temperature for thermal analyses shall be 70 °F. This temperature is based on recommendations from ACI 349 (Ref. 2.2).

4.6.2 Outdoor Ambient Temperatures	Unless specified otherwise in the Equipment/Tank Technical Specifications or datasheets, ambient air temperatures shall be as follows: For SC-IV equipment: 115 °F maximum, -25 °F minimum
4.6.3 Operating Temperatures (Normal and Abnormal), T_o	Operating (normal and abnormal) temperatures are provided in WTP Equipment/Tank Technical Specification. Abnormal Temperatures are due to an anticipated eight-hour loss of cooling event, which is postulated to occur once per year, and is not the result of an accident or natural phenomena hazards (NPH). Abnormal temperature thermal loads shall not be considered concurrent with earthquake (E) loads. For load combinations which include earthquake (E), T_o shall be normal operating temperature thermal loads only. For load combinations without seismic (E), T_o shall be greater of normal or abnormal operating temperature thermal loads.
4.6.4 Accident Temperatures (Design Basis Event), T_a	Accident temperatures are associated with the Design Basis Event (DBE) and provided in the WTP Equipment/Tank Technical Specifications, unless noted otherwise in Section 5 of this exhibit and are described as: a) High energy line break (HELB). Which are to be considered concurrent with NPH loads in accordance with the appropriate codes. b) Loss of facility cooling combined with extreme outdoor temperatures. This load and NPH Temperature load shall not be considered concurrent with earthquakes (E) loads.
4.6.5 Temperature Limitations on Structural Elements	SC-III and SC-IV designed steel and stainless steel structures shall use reduced yield stress (Fy) and elastic modulus (E) in accordance with the ASCE Engineering Practice 78 (Ref. 2.4), see example provided in Appendix A.
5 Loads and Load Combinations	The following loads and load combinations are applicable to both SC-III and SC-IV equipment and tanks.
5.1 Structural Steel Design Load Combinations	For the design of equipment and tanks, the following loads shall be combined with other applicable loads, per the provisions of the Equipment/Tank Technical documents included with the Purchase Order (P.O.). A Ashfall Loads D Dead Loads E Earthquake (Seismic) Loads (Due to DBE) L Live Loads S_N Snow Loads W Wind Loads T_o Thermal Loads during Normal & Abnormal Operating Conditions T_a Thermal Loads due to Accident (DBE) Temperature P_o Maximum or minimum differential pressure load generated by Normal or Abnormal HVAC operations P_a Maximum or minimum differential pressure load generated by DBE S Allowable Stress per Allowable Stress Design Method For the design of equipment/tank supports, the following service-level load combinations shall apply. Note: the 1/3 allowable stress increase discussed in UBC-97 (Ref. 2.9), Section 1612.3.2, has been incorporated into the following combinations through the use of the 0.75 factor. No further stress increase is allowed. The following load combinations are based on Section 1612.3.2 of UBC-97 and using the Allowable Stress Design Values of AISC M016, ASD Ninth Edition (Ref. 2.3). $S = D+L+A+P_o+T_o$ $S = D+L+S_N+P_o+T_o$ $S = 0.75(D+L+W+P_o+T_o)$ $S = 0.75(D+L+S_N/2+W+P_o+T_o)$ $S = 0.75(D+L+S_N+W/2+P_o+T_o)$

	$S = 0.75(D+L+P_o+T_o+E/1.4)$ $S = 0.75(0.9D+P_o+T_o \pm E/1.4)$ $S = 0.75(D+L+P_a+T_a)$ $S = 0.75(D+L+T_a+E/1.4)$ Where T_a is Due to HELB
5.1.2 Other Loads	Where other loads are to be considered in design, each applicable load shall be added to the combinations specified above per requirements of Section 1612.3.3 of UBC-97 (ref. 2.9).
5.2 Reinforced Concrete Design Load Combinations (Anchorage design)	For equipment and tanks anchorage design, the following loads shall be combined with other applicable loads, per the provisions of the Equipment/Tank Technical Specifications. A Ashfall Loads D Dead Loads E Earthquake Loads F Fluid Loads H Lateral Earth Pressure Load L Live Loads R_o Operating Pipe Reaction Load S_N Snow Loads T_o Thermal Loads during Normal & Abnormal Operating Conditions W Wind Loads T_a Thermal Loads due to Accident (DBE) Temperature P_o Maximum or minimum differential pressure load generated by Normal or Abnormal HVAC operations P_a Maximum or minimum differential pressure load generated by DBE U Required Strength per Strength Design Method The following load combinations are based on section 9.2 of ACI 318 (Ref. 2. l). $U = 1.4D+1.7L+1.7A$ $U = 1.4D+1.7L+1.7S_N$ $U = 0.75(1.4D+1.7L+1.7W)$ $U = 0.75(1.4D+1.7L+1.7S_N+1.7W)$ $U = 0.9D \pm 1.3W$ $U = 1.4D+1.7L+1.7A+1.7H$ $U = 1.4D+1.7L+1.7S_N+1.7H$ $U = 0.9D+1.7H$ $U = 1.4D+1.7L+1.7A+1.4F$ $U = 1.4D+1.7L+1.7S_N+1.4F$ $U = 0.9D+1.4F$ $U = 1.4(D+T_o)$ In addition, the following load combinations based on UBC Section 1612.2.2 shall apply. $U = 1.1(0.9D \pm E)$ $U = 0.75(1.4D+1.7L+1.7S_N+1.4T_a+1.4R_o)$ Where Ta is Accident (DBE) Temperature [see 4.6.4(b)] $U = D+L+S_N+F+H+T_a+R_o+E$ Where T_a is due to (HELB) [see 4.6.4(a)] $U = 0.75(1.4D+1.7L+1.4T_o+1.4P_o+1.4R_o)$ $U = 0.75(1.4D+1.7L+1.7S_N+1.4T_o+1.4P_o+1.4R_o)$ $U = 1.4(D+T_o+P_o)$ $U = 1.1(1.2D+L+0.2S_N+1.3F+1.6H+1.2T_o+1.2P_o+1.2R_o+E)$ Where T_o and P_o are the normal operating values only $U = 0.75(1.4D+1.7L+1.7S_N+1.4T_a+1.4P_a+1.4R_o)$

	$U = D+L+S_N+F+H+T_a+P_a+R_o$
6 Equipment and Tank Anchorage	The Supplier shall furnish the Buyer with the following information: • Location of anchorage in relation to equipment. • Design loads on the anchorage shall be reported by individual load and load combination. • Coordinate system and sign conventions. The selected anchor bolt material for the WTP project is ASTM F1554 (Ref. 2.6). Use of other anchor bolt materials, require the approval of the Buyer.

Exhibit 4

Positive Material Identification (PMI) for Shop Fabrication

Specification 24590-WTP-3PS-G000-T0002, Rev. 9 was used to create the following exhibit. Specification change notices (SCNs) have been evaluated and there are no applicable SCNs.

1 Scope	This exhibit covers the minimum requirements for and the extent of application of Positive Material Identification (PMI) testing of shop fabricated pressure retaining equipment and piping. This exhibit applies to shop fabrication only.
3 Technical Requirements	
3.1 General	The purpose of PMI is to provide evidence that the materials are correctly supplied as specified by project documents. PMI is required for shop-fabricated items fabricated from the alloys identified in Table 1. When required by this exhibit, PMI testing will be done on each component of a pressure retaining assembly. This shall include each individual segment of pipe, each plate, and all other pieces of base materials (e.g., forgings, fittings, and tubing) and all required pressure retaining welds. For purposes of this exhibit, the following definitions are used: <u>Alloy</u>: Metallic materials (including welding filler materials) which contain alloying elements including but not limited to: Chromium (Cr), Nickel (Ni), Molybdenum (Mo), Copper (Cu) or Tungsten (W). <u>300 Series Stainless</u>: Austenitic Stainless Steels (304L, 316L, etc.) <u>6 % Mo</u>: AL6XN, 254 SMO, etc. <u>Duplex Stainless Steel</u>: CD4MCu, etc. <u>Nickel Base</u>: Alloy C-22, 625, 690, etc.
3.2 Responsibility	The Seller shall submit to the Buyer, for review and comment prior to fabrication, procedures covering how PMI will be conducted and documented. The Seller's procedures shall include the instrument manufacturer's procedures and requirements, operator qualification/re-qualification requirements, instrument calibration method(s), calibration frequency during testing, criteria for acceptance or rejection, material identification method, and record keeping.
3.3 Verification Method	
3.3.1	Instruments used for PMI shall be of the type that will provide quantitative, recordable, elemental composition results for positive identification of the alloy elements present. a) PMI shall be done per the procedures outlined by the manufacturer of the PMI instrument being used. Modification of these procedures must be approved by the Buyer. b) Each PMI instrument shall be calibrated according to the manufacturer's requirements.

3.3.2	The methods/instruments listed below are acceptable. In application, they must not be used in a "go-no-go" mode. The only acceptable objective is the positive identification, listing, and quantification of the relevant elements listed in Section 7. a) Portable X-ray fluorescence analyzers. Use is limited to the following instruments or their equivalent unless prior approval is given by the Buyer: • TN Technologies Alloy Analyzer 9266, 9277 (The Metallurgist XR) or 9288 • Outokumpu X-Met 840, or X-Met 880 • Niton Alloy Analyzer (800 Series) • Thermo Scientific Niton XL3t Analyzer • Metorex X-Met 920, X-Met 3000TA or X-Met 3000TX Metal Analyzer • Innov-X Systems XT Series Analyzer • Innov-X Systems Alpha 6500 Series Analyzer • Innov-X Systems Delta Model DP-2000, DS-2000, or DC-200 Analyzer b) Portable optical emission analyzers. Use is limited to the following instruments or their equivalent unless prior approval is given by the Buyer: • SpectroPort Model TP-07 or TFO-02 • Outokumpu ARC-MET 900 or the New Spectrotest • SpectroLab, Spectrotest and Spectrotest Jr. Any other instrument will require Buyer's approval via the submittal process. Note: Arc strikes, if any, need not be removed.
3.3.3	In lieu of using portable instruments, chemical analysis can be performed on actual material samples. Care must be exercised while collecting samples, as contamination can be contributed by the removal tools. Sample extraction shall not weaken or reduce the functionality of the component. Laboratory analysis reports shall be traceable to the individual component from which the sample was taken (See Section 6, below).
3.3.4	Parts that are too small to be tested using an alloy analyzer are exempt from PMI testing. If such exemption is claimed, the PMI procedure shall specify the minimum part size capable of being tested.
3.4 Welding Consumable Control	In addition to PMI testing required by this exhibit, the Seller shall have in place, and implement, welding consumable material control systems that can be verified by auditing. PMI of completed pressure retaining welds is required as indicated in Table 1. Production "Run Off" weld test coupons may be used for chemical analysis checks.
4 Extent of PMI	PMI shall be performed on completed equipment, or assembled parts of equipment, at such time as to ensure that only verified materials have been used in the fabrication and final assembly of components. If the assembled equipment configuration prevents PMI of any individual part, then that part shall be tested prior to assembly and be noted as such on the PMI documentation.
4.1 Vessels, Exchangers, Tanks, Filters and other Manufactured Equipment	Vessels, exchangers, and other manufactured equipment shall have PMI testing performed at the Seller's facilities. This shall include piping and components supplied as part of an equipment "package" or skid.

4.2 Shop Fabricated Piping	
4.2.1	PMI is required for all piping and piping components, circumferential pressure retaining welds, and non-autogenous longitudinal welds as indicated in Tables 1 and 2. Note that to the greatest extent possible (considering minimum size restraints of the PMI analyzer), the requirements for examining tubing are equivalent to that of piping.
4.2.2	PMI is not required on autogenous welds, fillet welds, or socket welds.
4.4 Valves and Pumps	PMI of valves and pumps is required for materials as indicated in Table 1 and piping fluid codes as indicated in Table 2.
4.5 Bulk Materials (Straight Run Piping, Fittings, Stock Valves, Etc.)	PMI is required as indicated in Table 1. Table 2 does not apply.
5 Identification	
5.1 General	All shop-fabricated items/pieces that have been successfully subjected to the required PMI shall be marked. The mark shall be durable and last through transportation and receiving inspection at the Buyer's facility. See Section 7 for items that do not pass PMI.
5.2 Marking Materials	Marking materials and adhesive tape selected shall not cause corrosion or other harmful effects. Requirements for marking materials: • The total chloride/flouride content shall not exceed 200 ppm. • The total sulfur content shall not exceed 400 ppm. • The total of low melting point metals such as lead, zinc, copper, tin, antimony, and mercury shall not exceed 1 percent; of this, mercury shall not exceed 50 ppm.
5.3 Equipment and Equipment Components	When it has been verified that the material has a composition consistent with the material specified, then it must be stamped with letters "PMIV". Use low stress stamps for identification. Items that cannot be stamped shall have an alternate system of marking. Heat exchanger tubing shall not be stamped. Any alternate system, and the items for which it will be used, must have Buyer approval. To the maximum extent possible, the stamping/marking shall be located for ease of future reference/verification.
5.4 Piping Materials	When it has been verified that the material has a composition consistent with the material specified, then a colored adhesive tape, or other approved marking method, shall be applied at one end to facilitate proper identification.
5.5 Fasteners and Small Parts	Fasteners and small parts shall be marked in accordance with the Seller's procedure using a hard marking method, an indelible ink, or paint.
6 Records of PMI	Results shall be recorded on PMI report forms, which shall indicate, as a minimum, the following for each examination: a) Name of inspector b) Date of testing c) Test method, including PMI instrument name and serial number d) Equipment tag number or pipe spool number (PO number for bulk items) for the specific piece tested e) Quantitative analysis results for relevant elements (see Section 7) A PMI map consisting of assembly and sub-assembly drawings shall be prepared for each piece of fabricated equipment or pipe spool. The map shall include components and welds and show the locations of PMI testing. An extended Shop Spool Sheet shall be provided for each individual spool number where PMI was done. In the case of bulk items, PMI results may be submitted in the form of a certificate verifying that parts were tested according to the requirements of this exhibit. Results shall be reported by heat/lot and shall include the following:

	a) Name of inspector b) Date of testing c) Test method, including PMI instrument name and serial number d) Type and number of pieces tested e) Acceptable composition ranges for the relevant elements (see Section 7) f) Material identified PMI forms shall become a part of the permanent inspection records. Seller shall submit the completed forms as part of the Final Document Package when required by the Form G-321-V in the Purchase Order.
7 Acceptance, Rejection and Retesting Requirements	All materials tested shall be identified by the PMI instrument as being consistent with the composition of the specified material. The results shall fall within the chemical composition requirements of the ASTM, AWS or other applicable material specification allowing for the accuracy of the instrument. Any questionable PMI result shall be re-analyzed by the same or another instrument, after verification of proper surface preparation. See Section 7.1, below, for materials and welds that fail to meet requirements on the second analysis. The following elements shall be identified and recorded, even if the instrument does provide immediate identification (e.g. display of "316", "6 Mo", etc.): Alloy — Elements 304, 304L — Ni, Cr 316, 316L — Ni, Cr, Mo 347 — Ni, Cr, Nb Duplex, 6% Mo, 254 SMO, AL6XN, etc. — Ni, Cr, Mo, Cu Nickel base alloys, C-22, 625, 690, etc. — Ni, Cr, Mo, W Welds joining dissimilar base materials or having filler materials that do not match the base material composition may include an allowance for dilution. Acceptable composition ranges for commonly used combinations of base material and weld filler metals are included in Table 3. Other combinations, when required, shall be identified to the Buyer for approval. Please note that the only proper use of Table 3 is for assessing dissimilar welds.
7.1	If any material, component, or weld of a type not requiring 100% testing is found to be unacceptable, all other materials, components, or welds (same heat, lot, etc.) represented by that failed item shall be considered suspect. The Buyer shall be notified immediately if a component is confirmed to have failed the PMI. The Seller will then have the following options, with Buyer concurrence: a) Scrapping/removing all materials, components, or welds represented by the test piece (all of that heat, lot, etc.) and replacing with new components or filler metals, or b) Performing 100 percent examination of the remainder of the represented materials, components, or welds, and replacing each item that fails the PMI check, or c) Verifying correct chemistry by laboratory chemical analysis.
7.2	If questionable values obtained with portable analyzers are verified by laboratory analysis, the laboratory analysis data shall be used and recorded.
7.3	Any item or component containing materials that have not passed the PMI shall be clearly marked as "DO NOT USE — PMI FAILED" and segregated from the remainder of the stock.

Table 1 PMI Requirements for Shop Fabricated Items/Pieces

ITEM - (NOTE 1)	VERIFICATION REQUIRED
Type 304 & 304L Stainless Steel Components	No
Type 316, 316L, & 347 Stainless Steel Components	Yes – 100%
6% Mo Components	Yes – 100%
Duplex Stainless Steel Components	Yes – 100%
Nickel Base Alloy Components	Yes – 100%
Alloy Valves	Yes – 100% Body and Bonnet Only
Alloy Pumps	Yes – 100% Casing Only
Alloy Piping – including non-autogenous longitudinal welds (Spools, Fittings, Straight-Run Pipe, and Tubing)	Yes – 100% for 6 % Mo alloys and Nickel base alloys Yes – 100% for 316L, used in the fluid codes listed in Table 2
Alloy Pressure Retaining Welds	Yes – 100% of completed welds that join material required to have PMI testing
Bolting — B8M used for Pressure Retaining Connections	Yes – 5 % of total bolts, minimum one check per heat
Alloy Heat Exchanger Tubing	Yes – 5 % of total tubes, minimum one check per heat
Venturis	Yes – 100% pipes and welds

Note:
1. The following items are exempted unless specifically designated for PMI by the Purchase Order:

   a) All type 304L stainless steel components, piping, and welds
   b) Deleted
   c) Non pressure-retaining parts, such as baffles, trays, tray clips, supports, pall-rings, support rings, etc.
   d) Non pressure-retaining welds and sections of piping, such as drains, vents, overflows, etc.
   e) Gaskets
   f) Instrumentation (except when the instrument is a shop fabricated piping component placed in-line of a piping system requiring PMI)
   g) Internal instruments parts (including pressure retaining parts)
   h) Instrument tubing less than 1/2 inch in diameter
   i) HVAC ducting
   j) Piping components located within piping systems for which PMI is NOT required.

Table 2 Fluid Codes Requiring PMI Testing (Shop Fabricated Piping and Piping System Components)

Fluid Code		Fluid Code		Fluid Code	
DR	Suspect Radioactive Steam	GU	Nitric Acid Fume	GV	Vessel Vent Radioactive
HN	Nitric Acid	HR	Recovered Nitric Acid	PA	Radioactive Aqueous
PB	LAW Feed	PC	HLW Feed Slurry	PE	Entrained Solids Concentrate
PF	Cs/Tc Concentrate	PH	LAW Melter Feed	PJ	HLW Melter Feed
PP	Ultrafilter Permeate	PR	Suspect Radioactive Liquid	PS	Suspect Radioactive Slurry
PU	Suspect Radioactive Gas/Vapor	PV	Strontium Carbonate	PW	Radioactive Gas/Vapor
PX	Radioactive Slurry	PZ	Waste Feed	RK	Sodium Permanganate
ZE	Plant Wash Fluid	ZF	Plant Washings	ZH	Acidic Effluent
ZJ	Alkaline Effluent	ZL	Spent IX Resin	ZN	Neutralized Effluent
ZR	Suspect Radioactive Condensate	ZS	Process Radioactive Condensate	ZX	Special Decontaminant
ZY	Scrubber Effluent				

Table 3 Base Material and Weld Filler Metal Composition Requirements (Wt %)

MATERIAL	Cr	Ni	Mo	Cu	W	Notes
304L BM	18.0 - 20.0	8.0 - 12.0	---	---	---	
308L WFM	19.5 - 22.0	9.0 - 11.0	0.75 max	---	---	E/ER308L & LT
304L Welds	18.0 - 22.0	8.0 - 12.0	0.75 max	---	---	Note 1
304L BM	18.0 - 20.0	8.0 - 12.0	---	---	---	
316L BM	16.0 - 18.0	10.0 - 14.0	2.0 - 3.0	---	---	
316L WFM	17.0 - 20.0	11.0 - 14.0	2.0 - 3.0	---	---	E/ER316L & LT
304L/316L Welds	16.0 - 20.0	8.0 - 14.0	3.0 max	---	---	Note 1
304L BM	18.0 - 20.0	8.0 - 12.0	---	---	---	
316L BM	16.0 - 18.0	10.0 - 14.0	2.0 - 3.0	---	---	
308L WFM	19.5 - 22.0	9.0 - 11.0	0.75 max	---	---	E/ER308L & LT
304L/316L Welds	16.0 - 22.0	8.0 - 14.0	3.0 max	---	---	Note 1
304L BM	18.0 - 20.0	8.0 - 12.0	---	---	---	
308L WFM	19.5 - 22.0	9.0 - 11.0	0.75 max	---	---	E/ER308L & LT
CD4MCu BM	24.5 - 26.5	4.75 - 6.0	1.75 - 2.25	2.75 - 3.25	---	
304L/CD4MCu Welds	18.0 - 26.5	4.75 - 12.0	2.0 max	---	---	Note 1

Table 3 Base Material and Weld Filler Metal Composition Requirements (Wt %) (cont.)

MATERIAL	Cr	Ni	Mo	Cu	W	Notes
316L BM	16.0 - 18.0	10.0 - 14.0	2.0 - 3.0	---	---	
316L WFM	17.0 - 20.0	11.0 - 14.0	2.0 - 3.0	---	---	E/ER316L & LT
316L Welds	16.0 - 20.0	10.0 - 14.0	2.0 - 3.0	---	---	Note 1
316L BM	16.0 - 18.0	10.0 - 14.0	2.0 - 3.0	---	---	
316L WFM	17.0 - 20.0	11.0 - 14.0	2.0 - 3.0	---	---	E/ER316L & LT
CD4MCu BM	24.5 - 26.5	4.75 - 6.0	1.75 - 2.25	2.75 - 3.25	---	
316L/CD4MCu Welds	16.0 - 26.5	4.75 - 16.0	1.75 - 3.0	---	---	Note 1
AL6XN BM	20.0 - 22.0	23.5 - 25.5	6.0 - 7.0	0.75 max	---	
625 WFM	20.0 - 23.0	58.0 min	8.0 - 10.0	0.50 max	---	E/ERNiCrMo-3
AL6XN Welds	20.0 - 23.0	25.5 min	7.0 - 10.0	0.75 max	---	Note 2
C-22 BM	20.0 - 22.5	Remainder	12.5 - 14.5	---	2.5 - 3.5	
CD4MCu BM	24.5 - 26.5	4.75 - 6.0	1.75 - 2.25	2.75 - 3.25	---	
C-22 WFM	20.0 - 22.5	Remainder	12.5 - 14.5	0.5 max	2.5 - 3.5	E/ERNiCrMo-10
C-22/CD4MCu Welds	16.0 - 22.5	25.0 min	10.5 - 14.5	---	2.5 - 4.5	
C-22 BM	20.0 - 22.5	Remainder	12.5 - 14.5	---	2.5 - 3.5	
C-22 WFM	20.0 - 22.5	Remainder	12.5 - 14.5	0.5 max	2.5 - 3.5	E/ERNiCrMo-10
C-22 Welds	20.0 - 22.5	52.0 min	12.5 - 14.5	---	2.5 - 3.5	Note 1
Alloy 625 BM	20.0 – 23.0	58.0 min	8.0 – 10.0	---	---	
to 304L	18.0 - 20.0	8.0 - 12.0	---	---	---	
to 316L	16.0 - 18.0	10.0 - 14.0	2.0 - 3.0	---	---	
625 WFM	20.0 - 23.0	55.0 min	8.0 - 10.0	0.50 max	---	E/ERNiCrMo-3
Alloy 625 to 304L/316L Welds	19.0 – 23.0	50.0 min	8.0 min	0.50 max	---	
AL6XN (N08367) BM	20.0 - 22.0	23.5 - 25.5	6.0 - 7.0	0.75 max	---	
to 304L	18.0 - 20.0	8.0 - 12.0	---	---	---	
to 316L	16.0 - 18.0	10.0 - 14.0	2.0 - 3.0	---	---	
625 WFM	20.0 - 23.0	55.0 min	8.0 - 10.0	0.50 max	---	E/ERNiCrMo-3
N08367 to 304L/316L Welds	19.0 – 23.0	25.0 min	4.0 – 10.0	---	---	

BM = Base metal; WFM = Weld filler metal

Notes:

1. Acceptance is based on the combined base metal and WFM spec requirements.
2. Acceptance is based on WFM spec and the expected amount of dilution for molybdenum.

Exhibit 5

Welding of Pressure Vessels, Heat Exchangers and Boilers

Specification 24590-WTP-3PS-MVB2-T0001, Rev. 3 was used to create the following exhibit. Specification change notices (SCNs) have been evaluated and there are no applicable SCNs.

1 Purpose	
1.1	This exhibit establishes the welding and heat treating requirements for fabricated pressure vessels (heat exchangers, fired-heater coils, boilers, and related equipment) for the River Protection Project –Waste Treatment and Immobilization Plant (RPP-WTP), located at Hanford in the southeastern part of the state of Washington.
2 Scope	
2.1	This exhibit provides general welding and nondestructive examination (NDE) requirements that are in addition to component specific requirements specified in design drawings, data sheets, and specifications. Specified component specific requirements supersede the general requirements in this exhibit, provided they do not violate the ASME Boiler and Pressure Vessel Code (ASME Code) requirements.
2.2	If the Seller finds a conflict between this exhibit, the design drawings/data sheets, any supplementary specification, or referenced Codes and Standards, the Seller shall obtain written clarification from the Buyer prior to proceeding with any work.
2.3	Deviations from this document require written approval by the Buyer.
2.4	Any work performed by third parties sub-contracted by the Seller shall meet the requirements of this exhibit.
3 Codes and References	
3.1	This exhibit is in addition to other project requirements such as ASME Code, technical specifications, request for bids and purchase orders. Conflicts shall be referred to the Buyer for resolution.
3.2	This exhibit is based on and supplementary to the following publications: • ASME B&PV Section II, Part C — Specifications for Welding Rods, Electrodes, and Filler Metals • ASME B&PV Section V — Nondestructive Examination • ASME B&PV Section IX — Qualification Standard for Welding and Brazing Procedures, Welders, Brazers, and Welding and Brazing Operators • AWS A4.2 — Standard Procedures for Calibrating Magnetic Instruments to Measure the Delta Ferrite Content of Austenitic and Duplex Ferritic-Austenitic Stainless Steel Weld Metal
4 Submittal of Procedures	
4.1	Procedures for welding, control and storage of filler material, and postweld heat treatment (PWHT) must be submitted for review to ensure compliance with ASME Code requirements and for suitability for the intended application. A review status of "Work May Proceed" must be obtained prior to use.

4.2	Applications of the welding procedures must be described adequately to allow verification of qualification and suitability for use in the welds to be performed. Application of a procedure to joint(s) shall be indicated by means of a weld map which consists, as a minimum, of assembly and/or sub-assembly drawings. The weld map shall provide traceability to the actual weld by uniquely identifying each weld to be made. The weld map shall include the following for each weld: • A vessel or applicable equipment assembly drawing and/or sub-assembly drawings showing the locations of all welds with assigned weld number • Welding Procedure Specification (WPS) used • Heat/lot number of materials joined traceable to the Material Test Reports/Certified Material Test Reports • Heat/lot numbers of weld filler traceable to the Material Test Reports/Certified Material Test Reports • Joint type (e.g. butt) and extent (e.g. all around, pitch of 2 in 6) • Required post weld heat treatment • Required non-destructive examination method and extent • Welder identification • Records for all weld repairs; for example R1 for the first repair, R2 for the second repair, and so on
4.3	Welding procedure specifications shall be qualified in accordance with the requirements of ASME Code, Section IX. The Procedure Qualification Record (PQR) shall be submitted with the WPS. Personnel qualifications will be verified at the worksite by the Buyer.
4.4	It is not the Buyer's intent to require revisions to the Seller's standard WPS to meet these requirements, yet the limitations must be clearly acknowledged, and the instructions must be employed by the welders during fabrication. To accommodate this, Sellers may revise WPS or issue job-only amendments or addenda to standard WPS. Any amendment or addenda shall become part of the WPS for the purchase order and shall be issued to the welders employed in the work.
4.5	A matrix linking Buyer's requirements and Seller's application of WPS (see attached Form 114) shall be submitted with the WPS/PQR (see 4.3).
4.6	For repair of a weld, either the original WPS or one submitted as a designated repair WPS shall be used.
4.7	Repair plans that use welding for repairs of welds or base metals shall be submitted for review prior to use. This applies to the repair of cavities that exceed 3/8" or 10% of the section thickness (whichever is smaller), or in the case of fillet welds, when the entire fillet weld needs to be replaced. A repair plan shall include the following: • The method of defining the type and the extent of the defect • The methods used for removing the defect • The testing conducted to ensure that the defect has been removed • The welding procedure employed • The NDE methods used to inspect the completed repair • Concurrence from the authorized inspector shall be obtained prior to any base metal repairs. A review status of "Work May Proceed" for the repair plan must be obtained prior to use.

4.8	Postweld heat treatment procedures including cleaning requirements, heating and cooling rates, thermocouple locations, and type of heating equipment shall be submitted to the Buyer for review. A review status of "Work May Proceed" must be obtained prior to use.
4.9	NDE procedures shall be submitted to Buyer for review and shall meet the requirements of ASME Code, Section V and shall state the specific acceptance/rejection criteria of the applicable ASME Code sections. A review status of "Work May Proceed" must be obtained prior to use.
4.10	NDE personnel qualification shall be per the applicable ASME Code.
5 Welding Process Limitations	
5.1	Root Pass of Single Side Butt Welds Without Backing (Open Butt) Only the following welding processes may be used and are subject to the limitations listed.
5.1.1	Shielded Metal Arc Welding (SMAW) • EXX10 or EXX11 electrodes are permissible for welding P1 and P3 steels only. • Impact test temperature not less than -20°F.
5.1.2	Gas Tungsten Arc Welding (GTAW) • Backpurge two layers minimum for 2-1/4 Cr -1 Mo alloys and higher.
5.1.3	Gas Metal Arc Welding (GMAW) • Only pulsed spray transfer may be used.
5.2	All Welding Except Root Passes for Open Butt Only the following welding processes shall be used, subject to the limitations listed:
5.2.1	Shielded metal arc welding (SMAW) Filler metal "F" numbers. • F1 & F2 - not permissible for pressure retaining welds. • F3 - only permitted on P1 with 0.30% maximum carbon or 70 KSI maximum specified ultimate tensile strength. - not permitted when base material requires impact testing below -20°F. • F4 - All other (see 5.1.1- low hydrogen electrodes shall not be used for single-sided roots without backing).
5.2.2	Gas Tungsten Arc Welding (GTAW) - Filler material is required.
5.2.3	Gas Metal Arc Welding (GMAW) • GMAW-P - Pulsed axial spray transfer - No Limitations. • GMAW-S - Short circuiting or globular transfer* - maximum base metal thickness 3/8 in. • Continuous spray transfer - No Limitations. • For nominal pipe sizes (NPS) less than 6 inch, all welding shall be performed in the 1G rotated position. *Globular transfer for thicknesses over 3/8 inch requires special qualification and acceptance on a shop-by-shop basis. Globular transfer is defined as the range between short circuiting and spray transfer. Normal parameters are 22 to 28 volts and 150 to 220 amps with 100% CO_2 or Argon-CO_2 mixtures.
5.2.4	Flux Cored Arc Welding (FCAW) • Arc shielding gas is required for pressure retaining welds.
5.2.5	Submerged Arc Welding (SAW) • Neutral flux (no active or alloy constituents) is required. • Run on/run off tabs shall be used where possible.

6 Welding Filler Materials	
6.1	Austenitic stainless steel (A-No. 8) welding materials for pressure boundary and load bearing welds shall contain a minimum delta ferrite content of five percent. The maximum ferrite content shall not exceed 12% for PWHT applications. Compliance with the minimum and maximum ferrite requirements may be based upon the certified chemical analysis and the WRC Delta Ferrite Diagram (Figure 1) or a ferrite gage complying with AWS A4.2. Alternatively, for SMAW electrodes and solid wire filler metal manufactured in the USA, a Certificate of Conformance may be used to confirm acceptability of the ferrite requirements.
6.2	For welding carbon or low alloy steel to austenitic stainless steel, the selection of filler material is subject to Buyer approval. When PWHT of these joints is required, the carbon or low alloy steel member shall be "buttered" with the applicable stainless steel or nickel alloy filler material (when the design temperature exceeds 800°F), and postweld heat treated. Then the joint shall be welded to the stainless steel member without further PWHT. There shall be no further welding once PWHT has been performed.
6.3	Welding consumables for welding P-No.1 materials with hardness limitations shall not exceed a weld deposit analysis of 1.0 percent nickel.
6.4	For the filler metal, (including filler metal/flux combinations), a Material Test Report (MTR) with actual test results is required for each heat/lot designation. Alternatively, a Certified Material Test Report (CMTR) in accordance with the ASME Code, Section II, Part C, is acceptable.
6.5	The storage, baking and drying of all welding consumables (i.e., covered electrodes, flux cored electrodes and fluxes) shall be as recommended by the manufacturer. Segregation of carbon steel, low alloys, and alloy consumables is required during storage, baking, holding, and handling (including portable ovens).
7 General Welding Requirements	
7.1	All welds, including those for non-pressure parts and attachments, (both permanent and temporary) made to pressure boundary components, shall be performed using welders, welding operators, and welding procedures qualified under the provisions of the ASME Code. The responsibility for welding to be used in ASME Code construction rests with the Seller. The Seller's responsibility includes the following documents which shall be available for use by the welders/welding operators and for reference by the Buyer: • Selecting and preparing the WPS(s) suitable to the need. • Preparing and providing a PQR documenting proof of the weldability of the variables described in the WPS. • Preparing and providing a Welder Performance Qualification (WPQ) documenting proof of the welder's ability to deposit sound weld metal within the range of WPS parameters being used.
7.2	The Seller is responsible for complying with all applicable Code requirements relating to welding and associated considerations, spanning from the design of the welded joint, consumables control and preheat, to final NDE of the joints.
7.3	All welding shall be protected from wind, rain and other harmful weather conditions which may affect weld quality. All surfaces to be welded shall be dry and free of mill scale, oil, grease, dirt, paint, coating, and other contaminants.
7.4	The welding of austenitic stainless steels or nickel alloys to attachments which have been coated with galvanizing or zinc type paint, even if the coating has been removed, is prohibited.
7.5	Weld bevel preparations for P-No.4 and higher alloys shall be machined or ground back to bright metal if they have been flame or arc cut.
7.6	Permanently installed backing rings or straps shall not be used. Temporary backing requires Buyer approval prior to use. Methods of removing temporary backing rings must be approved by Buyer prior to use.

7.7	The individual weld layer thickness for all processes shall not exceed 3/8 inch for materials less than 1-1/4 inch thick, or 1/2 inch for greater material thicknesses.
7.8	All weld joints for pressure retaining applications shall have a minimum of two passes.
7.9	Where joints are welded from both sides, the first pass shall be backchipped, ground or arc-gouged to sound metal before welding the second side. This requirement shall be stated on the WPS.
7.10	Peening shall not be used. The use of pneumatic tools for slag removal is not considered peening.
7.11	Each layer shall be completed prior to starting the next layer (no block welding).
7.12	Vertical welding shall be vertical up unless approved otherwise by Buyer for each specific application.
7.13	For clad (or weld overlaid) plate, the following limitations apply: The cladding shall be stripped back a minimum of 1/4 inch from the edge of base material bevels by machining or grinding, not by flame or arc gouging. The removal shall not reduce the base material thickness below the design thickness. The method of verifying complete removal of the cladding from this area shall be submitted for review prior to use. • Overlay weld metal shall not be used for joining base metals to each other. Local repair cavities in overlay deposits that penetrate into the base material more than 10 percent of its thickness or 3/16 inch, whichever is less, shall have the base material rewelded with welding materials having properties consistent with the base material before completing the overlay repair. • The ferrite content of deposited austenitic stainless steel weld metal may be determined using a gage (e.g. - ferritescope) calibrated in accordance with AWS A4.2.
7.14	Shielding and purging gases shall be welding grade, with a dew point of less than or equal to -40°F.
7.15	Temporary welds shall be made by qualified welders using qualified weld procedures.
7.16	All external supports, support rings, pads, and structural brackets attached to the vessel shall be seal welded all around to prevent corrosion between the vessel and attachments. When seal welding all around is not practical, provision for drainage shall be made: e.g., a gap in the low-point weld. These welds shall be included in the weld map required (see 4.2).
7.17	The required inspections and examinations shall be performed on weld seams that will be covered by attachments while still accessible.
7.18	Carbon arc gouging/carbon arc cutting is prohibited on super-austenitic stainless steels, such as AL-6XN®, and nickel-based alloys. Seller shall use a Supplier Deviation Disposition Request (SDDR) to obtain Buyer consent. This requirement applies to both base metals and weldments.
8 Preheat and Interpass Temperatures	
8.1	Preheat temperature shall be in accordance with the applicable Codes except that Code recommended minimum preheat temperatures shall be mandatory. Preheat requirements shall apply to all welding, including tack welding and welding of temporary attachments. Preheat requirements also apply to all thermal gouging and cutting operations except for P-No.1 steels. Preheat shall be maintained a minimum of 3 inches on either side of the joint.
8.2	For welds requiring preheating, the weld joint shall be completed with no intermediate cooling. Cooling under an insulating blanket is permitted provided that at least 30 percent of the joint depth has been filled and that applicable documents do not specify more stringent requirements.
8.3	The interpass temperature shall not exceed: • 350 °F for austenitic stainless steels and nickel base alloys • 800 °F for hard facing of low carbon austenitic stainless steel • 300 °F for superaustenitic stainless steels, with heat input not exceeding 50KJ/in
8.4	Preheat shall be determined by temperature indicating crayons, contact pyrometers or other equally suitable means. Temperature indicating crayons used on austenitic stainless steels and nickel base alloys shall not cause corrosive or other harmful effects. It is the Seller's responsibility to determine suitable brands that may be used. This information shall be made available to the Buyer's

	representative if requested.
8.5	If oxy-fuel torches are used for preheating, the torch tip shall be appropriate for the work (i.e., a "rosebud," not a cutting or welding tip).
9 Postweld Heat Treatment	
9.1	Postweld heat treatment requirements shall be in accordance with the applicable ASME Code and Buyer's requirements.
9.2	Direct impingement by furnace burner flames is not permitted.
9.3	Only resistance, induction, furnace, or quartz lamp heating methods are permitted. Exothermic heat treatment shall require prior written authorization by the Buyer via SDDR.
9.4	When local PWHT is performed, all attachment areas, including areas from which attachments have been removed, shall be included.
9.5	A sufficient number of thermocouples (attached directly to the unit being heat-treated) as described in the ASME Code shall be used to accurately indicate the temperature of the work and detect uneven heating.
9.6	The equipment shall be adequately supported during the PWHT to avoid distortion.
10 Workmanship and Inspection	
10.1	Each layer of welding shall be smooth and free of slag inclusions, excessive undercut, cracks and lack of fusion prior to beginning the next layer. In addition, the final weld layer shall be free of coarse ripples, nonuniform bead patterns, high crown, and deep ridges to permit the performance of any required NDE. All arc strikes, starts, and stops shall be confined to the welding groove or shall be removed by grinding (minimum wall thickness, as required by design, shall not be encroached upon). Welds containing cracks shall be repaired. The repairs may be a complete weld replacement or a local repair in accordance with the ASME Code. Weld porosity or pinholes shall be removed based on the requirements of the ASME Code.
10.1.1	Weld spatter or splatter that will interfere with any radiographic, ultrasonic, magnetic particle or liquid penetrant examination as determined by the Buyer's Supplier Quality Representative shall be completely removed in the area of examination. Vessels that receive a coating shall have all weld spatter or splatter removed in the area to be coated.
10.2	All temporary attachments shall be designed for removal prior to hydrotest.
10.3	Temporary attachments shall be removed and areas finished smooth with the vessel shell. NDE, in addition to visual examination, shall be performed to ensure no cracks have been generated.
10.4	Marking materials and liquid penetrant materials used on austenitic stainless steels and nickel-base alloys shall not cause corrosive or other harmful effects (see 8.4).
10.5	Misalignment (high-low) in butt joints shall conform to the ASME Code requirements.
10.6	The test for maximum hardness of the deposited weld metal, if required, shall be made after any required heat treatment. If the weld fails to meet the acceptance criteria and either of two subsequent adjacent tests exceeds the specified hardness, the weld shall either be replaced or reheat-treated and retested. The hardness requirement applies to the weld metal exposed to the process fluid. When not accessible, the opposite side shall be tested. Hardness readings shall be taken with a portable tester in accordance with ASTM A370.
10.8	Each weld shall be stamped with the welder's unique symbol or number identification using low stress stamps (as defined by the ASME Code). Any alternative method of marking shall be submitted for Buyer's review prior to use.
11 Records	
11.1	All records pertaining to base materials, filler materials, fabrication, and inspection shall be accessible for Buyer’s examination.
11.2	Records required to be submitted are identified in Section 4, 6, and 9.

Exhibit 6

Seismic Qualification Criteria for Pressure Vessels

Specification 24590-WTP-3PS-MV00-T0002, Rev. 3 was used to create the following exhibit. Specification change notices (SCNs) have been evaluated and there are no applicable SCNs.

1. Scope	
1.1	This exhibit covers pressure vessel seismic analysis criteria and supplements the requirements of the exhibits listed in Section 2.3.
1.2	This document shall be used by the vessel equipment designer.
1.3	Any communication between the Seller and the Buyer regarding the interpretation or interim findings of design must be in accordance with the instructions provided in the purchase order.
2 Applicable Documents	
2.1 General	
2.1.1	Work shall be in accordance with the referenced codes, standards, and documents listed below, which are an integral part of this exhibit.
2.1.2	When specific chapters, sections, parts, or paragraphs are listed following a code, industry standard, or reference document, only those chapters, sections, parts, or paragraphs of the document are applicable and shall be applied. If a date or revision is not listed, the latest issue, including addenda, at the time of request for quote shall apply. When more than one code, standard, or referenced document covers the same topic, the requirements for all must be met with the most stringent governing.
2.2 Codes and Industry Standards	
2.2.1	American Society of Mechanical Engineers, *Boiler and Pressure Vessel Code*
2.2.1.1	ASME Section VIII, Division l, *Rules for Construction of Pressure Vessels*
2.2.1.2	ASME Section VIII, Division 2, *Rules for Construction of Pressure Vessels - Alternative Rules*, American Society of Mechanical Engineers (Note: Code year not later than 2004 Edition with 2005 and 2006 Addenda). Linearization of Stress Results for Stress Analysis (ASME VIII, Div 2, Annex 5.A, 2007 Edition, no Addenda)
2.2.1.3	ASME Section II, Part D, "*Properties*"
2.2.2	UBC, 1997 *Uniform Building Code*
2.2.3	AISC M016, *ASD Manual of Steel Construction*, 9th Edition, American Institute of Steel Construction
2.2.4	DOE-STD-1020-94, Department of Energy, "*Natural Phenomena Hazards Design and Evaluation for the Department of Energy Facilities*", including change notice dated January 1996
2.2.5	ASME B31.3, *Process Piping*, 1996, American Society of Mechanical Engineers
2.3 Project Documents	
2.3.2	Exhibit 3 , *Structural Design Loads for Seismic Category III and IV Equipment and Tanks*
2.3.3	Exhibit 2, *Pressure Vessel Design and Fabrication*

3 Abbreviations and Definitions	EQD	Equipment Qualification Data Sheet
	MDS	Mechanical Data Sheet
	NPH	Natural Phenomena Hazard
	Performance Category	Per DOE-STD-1020-94, each SSC is assigned a NPH Performance Category ranging from PC-0 through PC-4
	RPP-WTP	River Protection Project - Waste Treatment Plant
	SC	Seismic Category
	SC-I, II, III, IV	Specifies the required seismic category of an equipment item. Refer to Exhibit 3 for a more detailed explanation.
	Seismic Loading	Seismic loading is defined in terms of a site-specified design response spectrum, also referred to as Design Basis Earthquake (DBE), or specified for the site by Uniform Building Code (UBC)
	SSC	Structures, Systems and Components
4 Conflicts		
4.1	In cases of conflicts between this exhibit and other drawings or specifications, the Seller shall call attention to the conflict and request an interpretation by the Buyer.	
4.2	All deviations from this exhibit, the purchase order, or the drawings require the written approval of the Buyer.	
5 Buyer's Responsibilities		
5.1	The Buyer assigns the Seismic Category to each vessel.	
5.2	The Buyer provides the Seismic Response Spectra where necessary to perform the seismic analysis.	
6 Seller's Responsibilities		
6.1	The Seller is responsible for the seismic analysis of the vessels according to the assigned Seismic Category. The Seller shall ensure that stresses in the vessel do not exceed those allowed, as defined in Section 7.4 for the vessel proper and reference 2.3.3 for the vessel supports, for the required loads and combinations thereof.	
6.2	Depending on the Seismic Category of the vessel and its internal components, a finite element analysis may be required to determine the vessel stresses when subjected to operating and seismic loading. The software and implementation used for the analysis shall be in accordance with the quality assurance requirements defined in the purchase order.	
6.3	The Seller shall obtain approval from the Buyer before nominating others to perform the design services.	
7 Design Requirements		
7.1 Seismic Category		
7.1.1	The RPP-WTP Structures, Systems, and Components (SSC) are categorized as SC-I, II, III, or IV. The SC level is based upon the contents and the required functionality of the SSC following a seismic event. The Seismic Category defines the applicable analysis method and the acceptance criteria.	
7.1.2	Seismic loading shall not be considered when performing the primary plus secondary stress range analysis required by Section VIII, Division 2, Appendix 4. In addition, seismic loading shall not be considered when performing a fatigue analysis required by Section VIII, Division 2, Appendix 5.	
7.1.4	NPH Performance Categories for each SSC are assigned using criteria specified in DOE-STD-1020-94, and range from PC-0 through PC-4 depending on overall risk of the facility operation and the assigned function to the SSC. The following table summarizes the descriptions of the NPH Performance Categories as defined in DOE-STD-1020-94 and the correlation to Seismic Category:	
7.2 Design Code		
7.2.1	The governing design code for the vessel proper is ASME Section VIII, Division l. The loadings to be considered in designing the vessel shall include those listed in paragraph UG-22 of the code.	

7.2.2	The governing design code for the vessel supports is as per Exhibit 2, *Pressure Vessel Design and Fabrication*.
7.3 Seismic Analysis	
7.3.1	Internal components, supports, and piping systems shall be analyzed the same as the parent vessel unless otherwise noted. Requirements for internal piping and supports are provided in Reference 2.3.3.
7.3.3	The seismic loads for SC-IV vessels shall be determined according to Exhibit 3. Factors for UBC equations are given in Section 4.0 of that exhibit.
7.3.5	The seismic analysis of SC-IV vessels and their supports shall be performed in accordance with Exhibit 3 and Exhibit 2.
7.4 Maximum Allowable Stresses and Acceptance Criteria for the Vessel Proper	
7.4.1	**Maximum Allowable Tensile Stress** - The maximum allowable tensile stress, S, for the material of construction of the vessel shall be as specified in ASME Section II, Part D, and Subpart 1 .
7.4.2	**Maximum Allowable Longitudinal Compressive Stress** - The maximum allowable longitudinal compressive stress used in the vessel design shall meet the requirements of paragraph UG-23(b) of the ASME Section VIII, Division 1.
7.4.3	**Maximum General Primary Membrane Stress** - The wall thickness of a vessel shall be determined such that the induced maximum general primary membrane stress does not exceed the maximum allowable stress in tension for any combination of loadings listed in paragraph UG-22 of ASME Section VIII, Division 1 that induce primary stresses and are expected to occur simultaneously during normal operation of the vessel.
7.4.4	**Combined Primary Membrane plus Primary Bending Stress** - The combination of loads as discussed in Section 7.4.3 shall not induce a combined maximum primary membrane stress plus primary bending stress across the vessel wall thickness, that exceeds 1.5 times the maximum allowable stress value in tension.
7.4.5	**Combination of Seismic Loadings with Other Loadings** - For the combination of seismic loading with other loadings in UG-22, the wall thickness of a vessel shall be determined such that the general primary membrane stress shall not exceed 1.2 times the permitted maximum allowable stress, as defined in 7.4.1, 7.4.2, 7.4.3 or 7.4.4. Seismic loading and wind loading or Multiple Overblow need not be considered to act simultaneously. As indicated in UG-23(c), seismic loads are combined with normal operating loads when applying the factor of 1.2 to the allowable stress. Note that ASME Section VIII, Division l, UG-23(d) is silent relative to any stresses other than General Primary Membrane, i.e., it does not address the same types of stresses (Local Primary Membrane, Primary Membrane plus Primary Bending) in the detail addressed in Section VIII, Division 2. Local Primary Membrane stress is discussed in ASME Section VIII, Division 2, Paragraph AD-140(c) and is limited to $1.5kS_m$, as is Primary Bending stress (AD-140(d)). Table AD-150.1 of ASME Section VIII, Division 2, then provides guidance for "k" under Design and other conditions. In accordance with that Table and in accordance with the commitment to use S vs. S_m, a factor of 1.2 times the permitted allowable stress in 7.4.4 above shall be used for Local Primary Membrane or Primary Bending evaluations that include seismic loading (i.e., 1.2 x 1.5 x S).
7.4.8	The acceptance criteria for non-safety vessels shall be in accordance with ASME Section VIII, Division 1, using the allowable stress, S, from ASME Section VIII, Division 1.

Exhibit 7

Deleted.

Exhibit 8

Instrumentation for Packaged Systems

Specification 24590-WTP-3PS-JQ07-T0001, Rev. 3 and its associated Specification Change Notices (SCNs) (24590-WTP-3PN-JQ07-00015, 24590-WTP-3PN-JQ07-00016 and 24590-WTP-3PN-JQ07-00016) were used, as applicable, to create the following exhibit.

1 Scope	
1.1 General	This exhibit defines the requirements for instruments, control devices, and control systems associated with major mechanical equipment packages and engineered facilities. This document is intended to be included as an attachment to various equipment package requisitions or have the applicable sections included in the primary equipment specification, or in the scope of work of subcontract packages. It defines the technical requirements for furnishing the instrumentation components, the associated instrument piping/tubing, wiring, and defined portions of the control system within such packages. If conflicts arise between this exhibit and the primary package specification, the primary equipment specification shall take precedence. If for a requisition or subcontract package covering a particular type of equipment, the Buyer's intent is not clear, it is the Bidder's responsibility to request the Buyer to elaborate on intent regarding the specific type of equipment involved. Bidders shall submit a deviation list and indicate to what extent their proposal does not comply with this exhibit. No deviation from this exhibit shall be made without Buyer's approval.
1.2 Acronyms	AI - Analog Input AHJ - Authority Having Jurisdiction ANSI - American National Standards Institute AO - Analog Output API - American Petroleum Institute ASME - American Society of Mechanical Engineers ASTM - American Society for Testing and Materials AWG - American Wire Gauge BACT - Best Available Control Technology C&I - Controls & Instrumentation CFR - Code of Federal Regulations COTS - Commercial-Off-The-Shelf DCS - Distributed Control System DI - Digital Input DO - Digital Output DOE - Department of Energy EGC - Equipment Ground Conductor EPA - Environmental Protection Agency ETFE - Ethylene Tetraflouroethylene (Tefzel) HVAC - Heating Ventilation & Air Conditioning ICN - Integrated Control Network IEC - International Electrotechnical Commission IEEE - Institute of Electrical and Electronics Engineers I/O - Input / Output ISA - Instrumentation, Systems and Automation Society ISO - International Organization for Standardization ITC - Instrument Tray Cable JB - Junction Box LPD - Laser Positioning Device

1.2 Acronyms (continued)	mA - Milliamp MCC - Motor Control Center MPMS - Manual of Petroleum Measurement Standards MR - Material Requisition mR - Millirad NDE - Nondestructive Examination NEC - NFPA 70; National Electrical Code NEMA - National Electrical Manufacturers Association NIST - National Institute of Standards and Technology NFPA - National Fire Protection Association NMCF - Non-Modifiable Configurable Firmware NRTL - Nationally Recognized Testing Laboratory O&M - Operation and Maintenance OSHA - Occupational Safety & Health Administration PLC - Programmable Logic Controller PPM - Parts Per Million RFP - Request for Proposal RGS - Rigid, galvanized steel RMC - Rigid Metal Conduit RPP-WTP - River Protection Project – Waste Treatment Plant RRS - Required Response Spectra RTD - Resistance Temperature Device SDDR - Supplier Deviation Disposition Request SPDT - Single Pole-Double-Throw SS - Stainless steel T/C - Thermocouple TIA/EIA - Telecommunications Industry Association/Electronic Industries Alliance UL - Underwriters Laboratories VDC - Voltage DC VAC - Voltage AC VFD - Variable Frequency Drive WTP -Waste Treatment Plant
1.3 Definitions	Application Software - ICN Software written by the Buyer for the Buyer's control system (ABB) to control equipment within Supplier packages for the RPP-WTP project. Contains logic sequences, permissives, limits, expressions, etc., that control the appropriate input, output, calculations, and decisions necessary to meet defined functional requirements. Documentation of configuration instructions shall be included in the Supplier's final package. Bidder or Offeror - Refers to a party proposing a technical and commercial solution to the request for proposal for the system or equipment described in the Request for Proposal or Subcontract package issued by the Buyer or Contractor. Buyer/Contractor - Refers to the primary contractor, Bechtel National, Inc., for the RPP-WTP. Cabinet - It is used interchangeably with the word "enclosure" within this exhibit. Commercial Off-The-Shelf (COTS) - Software to be provided in accordance with 24590-WTP-3PS-JQ00-T0004 Management of Supplier Software. Commercially available software with no modifications specifically for RPP-WTP. Enclosure - A surrounding case constructed to provide a degree of protection to personnel against incidental contact with the enclosed equipment and to provide a degree of protection to the enclosed equipment against specific environmental conditions. An enclosure generally does not have any operational interface accessible from the exterior.

	Panel - A type of enclosure that provides some kind of operational interface accessible from the exterior, without having to open the enclosure. Rack - An open frame construction of angle, strut, channel, pipe, etc., designed to support the mounting of four or more instruments. Shall - Indicates a mandatory requirement in order to comply. Should - Indicates a recommendation for compliance. Supplier/Subcontractor - Refers to the party ultimately selected to provide the equipment and/or service described in the Purchase Order or Subcontract. Third Party Software - To be provided in accordance with 24590-WTP-3PS-JQ00-T0004 Management of Supplier Software. Utility Support Software - To be provided in accordance with 24590-WTP-3PS-JQ00-T0004 Management of Supplier Software.
1.4 Data Sheets	The specific applications and requirements may be as described on data sheets provided by the Buyer and attached to the material requisition. In the event of conflicts between this exhibit and the data sheets, the data sheets shall take precedence.
1.6 Service Conditions	
1.6.2 Equipment, Material, and Services Required	The Supplier shall define control systems needed to safely operate and maintain the Supplier's system per the requirements of the equipment package specification. All instrumentation required for operation of the equipment shall be provided and installed, unless otherwise specified. The equipment specification and the Request for Proposal or Subcontract shall establish site installation, pre-commissioning tests, and actual commissioning responsibilities.
1.6.3 Hanford Site Climatological Data	The instrument and equipment will be temporarily stored under the following conditions: Elevation above sea level - Minimum: 662 feet; Maximum: 684 feet Ambient Air Temperature - Minimum: -23 °F; Maximum: 113 °F Rate of Increase - Maximum: 26 °F per 20 minutes Rate of Decrease - Maximum: 24 °F per hour Relative Humidity - Minimum: 5%; Maximum: 100%
1.6.4 General Plant Internal Design Conditions	The following provides the range of internal design conditions. The HVAC system will be sized to maintain internal conditions within these ranges for the external conditions. The instrument and equipment will operate its design life of 40 years under these conditions and service conditions as specified on the applicable data sheet or purchase order. Winter (min.): 50 – 66 °F Summer (max.): 75 – 113 °F Relative Humidity: 10 – 90 %
1.6.5 Radiological Classification and Design Conditions	Some instruments furnished to satisfy the requirements of this exhibit may be required to function in a radiation field. The intensity of the ambient radiation fields will be stated in the primary equipment specification. The instrument shall perform all of its required functions with its specified accuracy in this environment. Special design shall be considered for access, handling, and maintenance of instruments. In principle, whenever possible, instruments, and detectors that require maintenance shall be located outside of the contamination area. The IEEE Std 1205-2000 Annex D should be used as a guide to selecting material for instruments that can withstand radiation environments. The Supplier shall provide manufacturer's certification of material used in fabrication of instruments that must operate in the specified radiation conditions.

	Radiological classification of zones will be in accordance with 10 CFR 835 principles. The areas will be ventilated according to their contamination classification.
1.6.6 Seismic Events	The seismic operability of the supplied instrument and its installation shall be based upon a maximum Required Response Spectra (RRS) defined in the primary equipment specification or material requisition.
1.7 Work by Others	
1.7.1 External Connections	All external connections of wiring and piping between the Supplier provided instruments and the Buyer's utilities are excluded unless specified in the RFP or otherwise agreed to by the Buyer and Supplier.
1.7.3 Power Supply	See Exhibit 1, *Electrical Requirements for Packaged Equipment*, Section 4.1.1 for power supply.
1.8 Acceptability of Electrical Equipment	See Exhibit 1, *Electrical Requirements for Packaged Equipment*, Section 2 for criteria for acceptability of electrical equipment.
2 Applicable Documents	The following is a list of codes and standards that the seller shall comply with. If the code year is not specified, then the code year specified in the design or the most recent code year in effect at issue for procurement shall be used.
2.1 Codes	
2.1.1 American Society of Mechanical Engineers (ASME)	**ASME B31.3 (1996)** - Process Piping **ASME/ANSI PTC 19.3** - Performance Test Code for Temperature Measurement **MFC-3M** - Measurement of Fluid Flow in Pipes Using Orifice, Nozzle, and Venturi **MFC-10M** - Method for Establishing Installation Effects on Flow Meters **MFC-14M** - Measurement of Fluid Flow Using Small Bore Precision Orifice Meters
2.1.2 American Society for Testing and Materials (ASTM)	**ASTM A182** - Standard Specification for Forged or Rolled Alloy-Steel Pipe Flanges, Forged Fittings, and Valves and Parts for High Temperature Service **ASTM A269** - Standard Specification for Seamless and Welded Austenitic Stainless Steel Tubing for General Service **ASTM A276** - Standard Specification for Stainless and Heat-Resisting Steel Bars and Shapes **ASTM A564/A564M-04** - Standard Specification for Hot-Rolled and Cold-Finished Age Hardening Stainless Steel Bars and Shapes **ASTM A193** - Standard Specification for Alloy-Steel and Stainless Steel Bolting for High Temperature or High Pressure Service and Other Special Purpose Applications
2.1.3 Code of Federal Regulations (CFR) and Environmental Protection Agency (EPA)	**10 CFR 835** - Occupational Radiation Protection **EPA** - Determination of Volatile Organic Compound Leaks **EPA** - Hazardous Air Pollutants from Synthetic Organic Chemical Manufacturing Industry Equipment Leaks
2.1.4 National Fire Protection Association (NFPA)	**NFPA Volume 70 (1999)** - National Electrical Code (NEC)
2.2 Industry Standards	
2.2.3 Telecommunications Industry Association / Electronic Industries Alliance (TIA/EIA)	**TIA/EIA-232-F** - Interface Between Data Terminal Equipment and Data Circuit-terminating Equipment Employing Serial Binary Data Interchange
2.2.4 Instrumentation, Systems, and Automation Society (ISA)	**MC 96.1** - Temperature Measurement Thermocouples **S5.4** - Instrument Loop Diagrams **50.02, Part 2** - Fieldbus Standard for Use in Industrial Control Systems Part 2

2.2.5 Institute of Electrical and Electronics Engineers (IEEE)	**IEEE 1050 (1996)** - IEEE Guide for Instrumentation and Control Equipment Grounding in Generating Stations **IEEE 1202 -** IEEE Standard for Flame Testing of Cables for Use in Cable Tray in Industrial and Commercial Occupancies
2.2.6 International Electrotechnical Commission (IEC)	**IEC 60751** - Industrial Platinum Resistance Thermometer and Platinum Temperature Sensors
2.2.7 National Electrical Manufacturers Association (NEMA)	**NEMA ICS 6** - Enclosures for Industrial Controls and Systems
2.2.8 Occupational Safety and Health Administration (OSHA)	**1910.95 -** Occupational Noise Exposure
2.2.9 Underwriters Laboratory	**UL 508 (17th Edition)** - Standard for Safety Industrial Control Equipment **UL 508A**- Standard for Industrial Control Panels
2.2.10 WTP Project Documents	**24590-WTP-3PS-G000-T0003** - *Packaging, Handling, and Storage Requirements* **24590-WTP-3PS-JQ00-T0004** - *Management of Supplier Software* **24590-WTP-3PS-G000-T0014** - *Engineering Specification for Supplier Design Analysis* **Exhibit 1 -** *Electrical Requirements for Packaged Equipment*
3 Design Requirements	
3.2 Performance	Design, fabricate, furnish, test, deliver, and/or install all instrumentation and control components. This includes wiring, piping, and/or tubing, required for the operation of the specified equipment package system, as required in the RFP or Subcontract, and in accordance with this exhibit. The Supplier shall provide and terminate all cables that can be shipped completely pre-wired. The Buyer will provide all cables that need to be installed and terminated by the Buyer. The Supplier shall provide cabling requirements and termination details within the design package to enable Buyer to install and terminate cables. (Exception: specialty cable not on Buyer's standard cable list or specialty cable installations, e.g. "Drag Chains" or "Cable Reels", shall be provided by Supplier.)
3.3 Design Conditions	
3.3.1 Units of Measurement	The following units shall be used for design parameters, calculations, and scales. Positive gauge pressure - inches H_2O or psig Vacuum - inches Hg Vac or H_2O Vac Absolute pressure - inches Hg or psia Differential pressure - inches H_2O or psi Temperature - degrees F Flow: Solids - lb/hr Flow: Liquids and slurries - gal/min or lb/hr Flow: Gases or Vapors - std ft^3/min (scfm), std ft^3/hr (scfh), or lb/hr Flow: Steam or vapors - lb/hr Level - inches, feet, or % Composition - %, Wt. Fraction or PPM Density - lb/ft^3 Velocity - feet/second Viscosity - centipoise (cP) Current (Electrical) - ampere Electrical Potential - volt Resistance - ohm Conductivity - micro-Siemens (µS) per centimeter

3.3.2 Interlock and Alarm Requirements	Packaged systems shall be provided with a Common trouble (if specified) alarm and an Emergency shutdown alarm to annunciate in the Buyer's control room. In addition, the following control requirements shall also be met: • Field contacts shall open in the alarm condition • Field contacts shall open to initiate shutdown • Instruments and interlock systems shall be designed to be fail safe
3.3.3 Spare Capacity	The commissioned control system(s) shall include a minimum 10% built-in spare capacity to account for further plant modifications and maintenance. Spare capacity allowances are applicable for system sizing, control system inputs/outputs, enclosure and panel design, signal transmission systems, and terminal blocks as well as multi-pair control and instrumentation cables. Spare conductors shall be terminated to the extent possible. Unterminated spare circuits shall be taped and bundled for future use.
3.3.4 Instrument Signal/Power Circuit Protection	Instrument circuits shall be protected and housed to meet the electrical area classification in which it is installed. The choices of housing shall satisfy all pertaining codes. Intrinsically safe instrument systems should not be used, unless there are special site requirements, and then only with the Buyer's approval. Intrinsically safe system requires certification by Underwriters Laboratory (UL) or Factory Mutual (FM) Insurance Company. Each PLC or controller discrete I/O signal shall have its own independent overcurrent protection.
3.3.5 Area Environmental Conditions	Instruments and control devices provided by the Supplier shall be suitable for the environmental conditions specified in the RFP, or applicable data sheet.
3.3.6 Local Control Panel Instrumentation Indicators	Unless otherwise specified by the primary equipment specification, local motor controls (e.g. single local/remote switch per equipment control panel, momentary forward/reverse for each motor) shall be provided on a control panel for operating equipment in local mode. Local mode will allow control to be taken away from the Integrated Control Network (ICN) system. In local mode operations will be performed from the control panel and will not be subject to ICN interlocks. Independent protection interlocks will remain in force to prevent equipment damage. Indicating lights mounted on local control panels or indications on panel display screens includes command indications, status, and alarms, other than those on panels for the plant electrical power systems, shall conform to the following requirements for indicating lights for status, alarms, information, or control: **<u>Color - Meaning</u>** Red - Stopped, Closed, OFF, Alarm Green - Running, Opened, On Yellow - Transition, Indeterminate, Force Cyan (Light Blue) - Manual Violet/Purple - Local Control (HMI Displays) Clear - Local Control (Local Panels) NOTE 1: Switches or control effectors shall turn clockwise or move upward to increase function or energize a device. For single switch multi-direction control a 3 position switch with center position spring return is recommended (e.g. Forward/Reversing Motors, etc.) NOTE 2: Applicable standards and guidelines direct consistency of man-machine interface features in order to minimize operator errors. All control panels that are used for normal process operation should feature color-coding and display features that are consistent with the color scheme as defined above. The color scheme applies to vendor packaged control indications as well as any Supplier developed human machine interface screens. However, for

	control and indication panels that are intended for maintenance operation only, or that are not used for routine operator control, deviations from the color scheme listed above may be approved at the Buyer's discretion.
3.3.7 Push To Test Alarm Actuator	All alarm indicators (visual) and annunciators (audible), and all lights on a Control Panel (ref. 3.3.6) shall be activated with an integral momentary contact push to test feature or when a common momentary contact push to test button on the front of the panel is pressed. This function is provided to verify that the alarm and/or indication functions satisfactorily.
3.4 Controls and Instrumentation Requirements	
3.4.1 General	It is the intention of this exhibit that the instrumentation and designated portions of the control system be designed, fabricated, and installed as far as it is practical to the Supplier's design offering. However, specific manufacturers have been identified for the purpose of quality and standardization of the instrumentation and control system throughout the WTP facility. Appendix B of this exhibit includes a list of instruments and ancillary components. This list also identifies multiple suppliers for many commodities. However, inclusion in Appendix B does not imply that a supplier has been approved as a supplier of Quality (Q) products. The Buyer may revise this list to show the suppliers or advise as suppliers are selected for the various commodities. Bidder's proposal shall include cost associated with the use of Buyer designated instruments and control components.
3.4.2 Controls	
3.4.2.1 WTP Integrated Control Network Architecture	The Buyer has selected the Industrial^{IT} product line supplied by ABB Automation Inc. as the primary control system for the WTP facility. The selected platform is a highly versatile "hybrid" type system which is designed to implement the traditional DCS applications as well as the traditional PLC applications. For the purpose of standardization and maintainability it is a requirement to utilize components from this manufacturer to the extent possible with packaged systems. Packaged systems shall be integrated into the WTP ICN, the following options are available, listed in order of preference:

<table>
<tr><td>3.4.2.1.1 ICN Control Platform</td><td>This is the Buyer's preferred implementation method.

When the packaged system implements the ICN control platform it shall utilize the Buyer's selected manufacturer's control system hardware. This includes the processors, input/output modules, power supplies, communications hardware, etc. to be installed in the Supplier's supplied control cabinets. Dependent on the operational requirements of the package this could also include connectivity. The Buyer selected manufacturer's product line is a follows:

<u>Description/Manufacturer - ABB</u>
Controller Platform - AC800M
Input/Output Module Platform - S800
Software Development Environment - Control^{IT} for AC800M/C
Operate Environment - Operate^{IT}

All ABB hardware shall be procured by the Buyer on behalf of the Supplier for applications provided the agreement was made prior to the contract award.

Preliminary design for controls implementation shall be submitted for Buyer approval prior to the detailed design effort.</td></tr>
<tr><td>3.4.2.1.2 Commercial-Off-The-Shelf (COTS) Controls</td><td>Procured packaged systems considered as COTS are acceptable for integration into the ICN systems. For this determination, COTS controls are control hardware/software which do not require customization or design engineering for use on WTP. The Supplier shall supply the interface to the ICN using ICN supported communication hardware as follows:
<table>
<tr><th colspan="2">Package Description</th><th>Interface</th><th>Media</th></tr>
<tr><td rowspan="5">Status Only – No control via ICN</td><td>Limited data exchange – Preferred</td><td>Profibus DP®</td><td>Multimode Fiber Optic</td></tr>
<tr><td rowspan="3">Limited data exchange – Alternate*</td><td>4-20 mA - AI/AO</td><td rowspan="3">Hardwired</td></tr>
<tr><td>24 VDC - DI</td></tr>
<tr><td>Dry contact – DO</td></tr>
<tr><td>Significant data exchange</td><td>OPC over Ethernet</td><td>Fiber Optic</td></tr>
<tr><td rowspan="4">Control via ICN</td><td>Preferred</td><td>Redundant Profibus DP®</td><td>Multimode Fiber Optic</td></tr>
<tr><td rowspan="3">Alternate*</td><td>4-20 mA - AI/AO</td><td rowspan="3">Hardwired</td></tr>
<tr><td>24 VDC - DI</td></tr>
<tr><td>Dry contact – DO</td></tr>
</table>
* Buyer approval is required for substitution of these or other alternative interfaces.</td></tr>
<tr><td>3.4.2.1.3 Third Party Platform</td><td>Third Party control platforms shall not be utilized unless utilization of the Buyer's selected controls manufacturer is determined to be unfeasible, and the Buyer concurs with that determination and with the proposed third-party control platform. A list of preferred PLC suppliers is included in Appendix B of this exhibit. See Buyer specification 24590-WTP-3PS-JQ00-T0004 for the requirements governing software for the Third Party control platforms. The interface of the third party platform to the ICN shall be per table shown in the above paragraph 3.4.2.1.2.</td></tr>
<tr><td>3.4.2.1.4 Interface Data Requirements</td><td>Where the application software is provided by the supplier, see Buyer specification 24590-WTP-3PS-JQ00-T0004 for the requirements governing software. The Supplier shall provide a complete listing and detailed description of data points available for integration into the WTP ICN for operational, maintenance, and archiving purposes. All required control points required for the appropriate level of ICN control shall be clearly identified. The list shall be submitted to the Buyer for review and mutual concurrence. The final submission listing shall include all applicable interfacing details (entity names, addressing, etc.).</td></tr>
</table>

	Where the application software is provided by the Buyer, refer to paragraph 3.5 for software design documentation requirements.
3.4.2.1.5 Interface Integration Testing	Supplier shall provide proposed Profibus DP®, Foundation® Fieldbus, protocol converters, and interface devices immediately after the 90% review. This will facilitate testing at the Buyer's facility in Richland, WA. Previously tested devices by Buyer will not need to be supplied at this time.
3.4.3 Signal Transmission Interface	The Buyer is striving for a consistent implementation of the connection of field instrumentation and equipment to control systems throughout the WTP facility. Preliminary design for connection of field instrumentation and equipment to control systems shall be submitted for Buyer review prior to the detailed design effort. Supplier shall organize circuits and circuit terminations in Supplier's interfacing termination enclosures based on signal types or circuit configurations. These signal types will include Al, AO, DI, DO, serial, Profibus DP®, Foundation® Fieldbus, etc., and should be further grouped by 2-wire, 3-wire, or 4-wire circuit configurations. Based on quantities of these types, cable requirements can be established early. Subsequent to the contract award, C&I will work with the Supplier to "assign" signals to specific circuits and I/O channels as soon as possible. The Supplier shall apply the following process when determining connection type.
3.4.3.1 Foundation® Fieldbus	Where available, process instrumentation shall be Foundation® Fieldbus compliant. Foundation® Fieldbus interfaces are used to communicate directly with Fieldbus enabled instruments and equipment. All Foundation® Fieldbus devices supplied shall be registered with the Foundation® Fieldbus, compliant with the current version of the Interoperability Test kit at the date of the purchase order, and supplied with manufacturer developed Device Description files. Only Buyer approved Interfacing devices shall be used to convert signals from their standard format to the Foundation® Fieldbus protocol. These devices shall be supplied by the Supplier and used only when a native Foundation® Fieldbus device is not available. The same communication, testing, and registration requirements apply to Fieldbus converters as to native Fieldbus devices.
3.4.3.2 Profibus DP®	Communication interfaces to intelligent mechanical handling and electrical equipment shall be Profibus DP® compliant. Profibus DP® communication link shall be used to interface controllers directly with devices such as "intelligent" motor control centers (MCCs) and variable frequency drives (VFDs). All Profibus DP® devices shall be supplied with .GSD files and documentation describing data interchange. Other interfaces, such as DeviceNet®, AS-Interface®, TIA/EIA-232/485, etc. may be utilized with the appropriate converters with Buyer's approval. Supplier supplied conversion modules will be used where required. When Profibus DP® is the communications link between the Buyer's control system and the Supplier's control cabinets the following shall apply:
3.4.3.3 Communication Network Interface	The Buyer has selected the Industrial platform from ABB, Inc. as the primary control system for the WTP facility. A Profibus DP® communication network will be used to communicate to drives and intelligent positioning instruments. The Supplier shall provide the following components for a Fiber Optic cable interface:
3.4.3.3.1 Profibus DP® Communication Interface	The Supplier shall provide a native Profibus DP® slave interface for the control panel or instrument and the associated drivers (GSD files) for communication with the Buyer's control system. The interface should support communication speeds up to 12 Mbit/sec over the Profibus DP® network.

3.4.3.3.2 Fiber Optic Connections	The Supplier shall provide the following component for proper network communication. a) The supplier shall install a Hirschmann OZD Profi 12M G12 fiber optic converter within the control panel or near the instrument for each communication network. b) The Supplier shall derive the appropriate power to the fiber optic converter(s) from the control panel power feed. Where the only supply available from the Buyer is 480V 3Φ, then the Supplier shall use this to derive the 24VDC supply for the fiber optic converter. A separate power supply shall be provided for each communication network. c) The Supplier shall follow the general fiber optic requirements described in section 3.4.3.5.
3.4.3.3.3 Alternate Communication Interface	If a native Profibus DP® interface is not available, then the Supplier may propose an alternate communication interface or network that is compatible with the Buyer's control system for Buyer consideration and approval. If an alternate communication interface is proposed: a) The Supplier shall provide all necessary interfaces or converters required to provide the Buyer's control system with the appropriate communications. b) The Supplier shall provide any required drivers, software, and protocol conversion information to the Buyer for design, development, testing, and maintenance of the supplied networks and interfaces for the period of performance of the contract, including software or firmware upgrades or revisions as described in 24590-WTP-3PS-JQ00-T0004 Engineering Specification for Management of Supplier Software. c) As part of the bid submittal package, the Supplier shall provide a description and examples of all required conversions between protocols and/or communication networks including required software applications and hardware components.
3.4.3.4 Classic I/O	If bussed communications are not feasible for connection of field instrumentation and equipment to control systems, standard Input/Output modules shall be used. Circuit design shall account for the WTP preferred I/O module types, as follows: 1. Analog Inputs – 4-20 mA current 2. Analog Output – 4-20 mA current 3. Discrete Input – 24 Volt dc 4. Discrete Output – 24 Volt dc I/O modules shall be optically isolated from input and output wires to protect logic circuitry from high voltage transients. All output circuits shall have overcurrent protection. The I/O modules shall be of the plug-in type and shall be removable without turning off the power or disturbing field wiring ("hot swappable"). The I/O assemblies shall have indicators that are visible during operation to display the status of the I/O interface and individual I/O channels.

3.4.3.5 Fiber Optic Interface	For equipment packages that include a fiber optic interface the supplier shall provide a fiber optic connection to the control panel or instrument per the following requirements: a) The Supplier shall use 50/125 glass fiber patch cables to connect between the fiber optic patch plate(s) and the fiber optic converter(s). Any unused fiber optic connections shall be fitted with protective caps to guard against extraneous light and dust. b) The Supplier shall utilize a Corning MT-RJ patch plate mounted in a protective housing to provide cable management, strain relief, and fiber protection. c) Fiber optic patch cables shall utilize unpinned MT-RJ connectors on the converter side of the patch plate. Buyer-installed field cables will utilize pinned MT-RJ connectors. d) For installations that have 24 fibers or less, the Supplier shall install a Corning CCH-CP24-97 patch plate and SPH-01P Single Panel Housing. e) For installations that have more than 24 fibers, or where multiple fiber optic cables will be terminated on the field-side of the patch plate, the Supplier shall install the appropriate number of Corning WIC-02P or WIC-04P housings with corresponding CCH-CP24-97 patch plates. f) All fiber optic designs and installations shall follow the manufacturer's guidance including equipment mounting, bending radius, strain relief, fiber termination, fiber and cable protection, and related items. The Supplier's designs shall make provisions for installation of Buyer's field cables that also meet these requirements.
3.4.5 Instrumentation Requirements	Instrument ranges shall be selected such that the normal operating point is between 35 and 75 percent of the range of the instrument. Except where the Buyer has specifically identified manufacturer and model, all the instruments shall be selected by the Supplier in accordance with guidelines provided herein. The instruments described below shall be selected to meet the required safety classification, specified quality, and the design criteria stated herein and in the primary equipment specification. The systems designed and fabricated shall meet the specified reliability and availability for each system or component. Instrumentation and associated materials shall be selected to be Radiation tolerant to the level identified in the instrument datasheet for both the maximum instantaneous dose rate and the Time integrated dose for the design life of the instrument. All instrumentation shall support proper and accurate operation of the equipment up to the instantaneous doses identified for the instrument locations. Unless otherwise specified, Instruments located in caustic or corrosive environments or exposed to process fluids or gases, shall comply with ASTM A276, type 316L. The Supplier may suggest alternative instruments based on their past experience with similar applications subject to the Buyer's review and concurrence.
3.4.5.2 Temperature Measurement	Temperature measurement devices shall be selected that are optimized for the application and environment of the measurement services. This includes installation constraints, ambient conditions, and process conditions of the measurement devices. The following describes the Buyer's requirements for specific types of temperature measuring elements and systems.

3.4.5.2.1 Temperature Elements	All temperature elements, Thermocouples (T/Cs) or Resistance Temperature Devices (RTDs), shall be installed in thermowells to permit removal without process disturbance except where there is no risk to personnel from the process fluid during removal of the measuring element, i.e. shell skin, motor bearings and motor windings. Where a thermowell is not used, and the temperature element is not surface mounted, a permanent label shall be affixed to the primary element, indicating that there is no thermowell. Sheathed RTDs with transmitters shall be used for remote temperature indication. Sheathed, grounded junction type E T/Cs are preferred temperature sensors when process conditions prohibit the use of RTDs. T/C shall be according to ISA MC96.1 or equivalent. Ungrounded junction T/Cs shall be used where the process fluids or equipment are at a potential above ground that could lead to dangerous conditions for maintenance personnel and signal conditioning equipment. Use T/C where: • No air permit functions are supported by the device. • The temperature sensor is installed in a high vibration environment; or • A temperature span exceeding 1400 °F is required; or a response time of less than four (4) seconds is required. • Unsheathed tip thermocouples shall be used where induced electrical voltages or high potentials may be present (e.g. in the measurement of bearing temperatures in electrical machinery). • Motor bearing temperature measurements may use thermocouples provided local transmitters are used. RTD elements shall be Platinum with a nominal resistance of 100 Ohm 32 °F. The resistance-vs.-temperature characteristic curve shall conform to IEC 60751 with a temperature coefficient of 0.00385 ohms/ohm/°C. Three wire element design shall be used. Unless otherwise specified, T/Cs and RTDs shall be sheathed with Magnesium Oxide insulation. The sheath shall comply with ASTM A276, type 316L and have a 1/4" diameter as a minimum. All T/Cs or RTDs shall be duplex design, spring loaded, and supplied with a connection head with internal grounding screw and external ground terminal. All elements shall be connected in the connection head. Temperature measurements using T/Cs and RTDs shall use remote mounted transmitters with the appropriate input/output voltage isolation and located in the field or panel to connect an isolated signal to the Buyer's or Supplier's control system. Multipoint averaging T/C sensors shall be used in the temperature measurements in large ventilation ducts to provide a representative measurement of the flowing stream. Test thermowells shall have a plug or cap permanently attached with a chain or wire and labeled as a test point.
3.4.5.2.2 Local Dial Thermometers	Local dial thermometers shall be bimetallic type, externally adjustable with a 5" dial. The maximum error shall not exceed 1% of the range. The stem is to be an adjustable every angle type with 1/2" NPT connection. The gauge scale shall be selected so that nominal operating temperature is 40-60% of the gauge scale.

3.4.5.2.3 Filled Systems	Filled thermal systems shall be class IA, liquid filled type, liquid fill shall be material that is not on the WTP restricted materials list. Construction of filled systems shall be constructed to comply with ASTM 276, type 316L and designed as follows: • Type 316L SS Capillary with mechanically lockable flexible armor. • Bulb shall be 3/8" with a plain bendable extension and a pressure tight adjustable union. Where the filled system is affected by the ambient temperature, the instrument should have case and capillary compensation. The maximum length of capillary to be used is 40 feet. Over this length a transmitter shall be used. Filled systems shall only be used within the temperature range of 32 °F to 500 °F.
3.4.5.4 Absolute, Gauge, and Differential Pressure Measurement	Pressure instruments shall be ranged for normal operation at 40-60% of scale for pressure gauge and transmitters.
3.4.5.4.4 Diaphragm seals	Diaphragm seals shall be provided where: 1. Corrosive material is being measured and a suitable element material is not available. 2. Material that will polymerize is being measured. 3. Material with a freezing point above the minimum ambient temperature at the instrument or at any point along the sensing line is being measured (i.e. the material could freeze in the sensing line or in the instrument). 4. Material containing solid matter that could plug the instrument.
3.4.5.10 Encoders and Resolvers	Incremental encoders shall use quadrature decoding. Since incremental encoders provide only relative position they shall be used in configurations with a "datum" switch. Incremental encoders shall have a minimum 1024 pulses per revolution. Absolute encoders shall be multi-turn with Profibus DP® output for input directly to the Buyer's ICN or Binary code for direct input to motor drives. Absolute encoders can be integrated with the motor or may be installed separately. The absolute encoder shall provide a unique output for every position. The absolute encoder's nonvolatile memory shall retain the exact position without need to return to "home" position if the power fails. Absolute encoders shall have a minimum resolution of 12 bit per tum x 4096 revolutions. Resolvers shall use quadrature decoding with Profibus DP® output for input directly to the Buyer's ICN or Binary code for direct input to motor drives. Since resolvers provide only relative position they shall be used in configurations with a "datum" switch. Resolvers shall have a minimum 1024 pulses per revolution.
3.4.5.14 Power Cells	Power cells shall have an output accuracy of less than 1% of full scale. The response time shall not exceed 3 seconds. Transmitters shall be supplied for integration into the Buyer ICN platform.
3.5 Control Software	Software and firmware provided by the Supplier to support the instrumentation shall be provided in accordance with 24590-WTP-3PS-JQ00-T0004 Management of Supplier Software. Where application software for the instrumentation is provided by the Buyer, the Supplier shall supply documentation of the control execution requirements to a level suitable to the complexity of the application. The method of conveying the Supplier's control execution requirements and the subsequent review of the Buyer's design/implementation shall be agreed prior to contract award. Any cost, schedule, or warranty restraints caused by this arrangement shall be identified in the Bidder's proposal.
3.5.1 Software Definitions	The terminology for WTP control systems software has been standardized and is shown in

	section 1.3.
3.6 Enclosures, Cabinets, Panels, and Racks Requirements	The Supplier shall supply the instrument enclosures, cabinets, panels, and racks necessary to support the instrumentation and control systems required by the primary equipment specification. Instruments that require physical or environmental protection shall be installed in enclosures that meet the specifications of this section. Instruments that have a construction and NEMA rating that permits unprotected installation in the field shall be either individually field mounted or installed on open instrument racks that meet the requirements of this section. Operator control panels for interfacing to the control systems shall meet the requirements of this section. All enclosures, cabinets, panels, and racks shall be designed and fabricated to be in full compliance with NFPA 70-1999.
3.6.1 Rating and Type	All enclosures shall be designed for front access only unless otherwise specified. Enclosures shall be either outdoor, indoor, hose down, or corrosive environments per the NEMA 250 and NEMA ICS 6 standards based on the environmental specification requirements. In the absence of a specific NEMA requirement in the main mechanical package specification, a NEMA rating of 12 or 12K shall be the minimum acceptable requirement for indoor and NEMA 4X for outdoor. In areas where radioactive contamination is likely, only stainless steel enclosures shall be used.
3.6.2 Enclosure Internal Environmental Conditions	Internal equipment or components shall be protected from levels of dirt or dust that exceed those specified by the equipment or component manufacturer. The temperature inside of the enclosure shall not exceed the maximum and minimum operating temperatures of any device located within it. Natural convection and conduction cooling is the preferred method of dissipating heat within the enclosure. If "Hot Spots" such as those generated by power supplies or other electrical equipment are present, or an internal temperature exceeding 100 °F is anticipated, the enclosure shall be fitted with adequately sized ventilation fans where ambient conditions permit. Where forced-air cooling is necessary and practicable for proper operation of the apparatus housed in the enclosure, the enclosure shall be equipped with filters, blowers or other suitable filtration or cooling devices and maintaining the requirements of NEMA 250. Enclosures shall be provided with thermostatically controlled space heaters, where required by ambient conditions, to maintain temperature above dew point and above freezing. Mounting brackets, wire, and equipment for the heating or cooling devices shall maintain the NEMA enclosure requirements.

3.6.3 Mechanical Requirement	Freestanding, fixed location, enclosures shall be fitted with a base, have rigid bracing, removable lifting eyes and include provisions for securing to floor with anchor bolts or bolted or welded to Buyer's floor embed. Wall mounted enclosures shall be sized by the Supplier and shall include all rigid bracing, door latch, and mounting fixtures needed to mount the enclosure to the wall. Where lockable enclosure doors are specified on the primary equipment specifications, datasheets, or drawings, the doors shall have a common key lock. Buyer will review and concur with the key arrangement and selection. All packaged systems and equipment controls shall be pre-wired to terminal blocks in permanently mounted enclosure. The terminal blocks shall be designed for easy interconnection to Buyer's control and communication circuits (see section 3.4.3 design requirements of this exhibit for signal transmission interface). Where enclosed or protected installation is not required, then racks shall be used for mounting instruments to provide ease of maintenance and calibration. The rack frame for mounting instruments shall be constructed of stainless steel Unistrut channel and stainless steel Unistrut systems components and designed to support the weight of installed instruments. Free standing racks shall be fitted with a base, rigid bracing, and lifting eyes. Racks shall also include provisions for securing to walls or floor with anchor bolts or bolted to Buyer's embed. All rack mounted instrumentation shall have NEMA 4X rating or better.
3.6.4 Enclosure Segregation Requirements	For some mechanical equipment, a set of enclosures may be required. The enclosures shall be defined in the primary equipment specification. These enclosures shall house the necessary control, instrument, safety, and electrical equipment to facilitate the requirements of the package equipment. Where small quantities of control equipment are involved, enclosure functions may be combined; however, combining of functions must take into account segregation of power and control equipment for commissioning, maintenance, and safety purposes. The enclosures shall be segregated into separate sections for: 1) Not used, 2) DC Analog, signal conditioning and interface functions, 3) Discrete Inputs and Outputs signals, and 4) DC and AC power.
3.6.5 Enclosure Grounding Requirements	
3.6.5.1 General	The enclosure grounding system shall be installed in conformance to IEEE Guide 1050-1996, section 5.3.1 "Single point grounding system" and shall comply with NFPA 70-1999 250-112(k), 250-118, 250-119, 250-122, 250-134, 250-138, and 250-97 as applicable. Instrumentation enclosures that house digital and analog signaling circuits shall have an equipment safety ground bus and an isolated signal ground bus. Grounding for electrical devices and instruments, including signal and power supply shall be in accordance with manufacturer's recommendations and applicable NEC requirements.
3.6.5.2 Grounding Bus	Each grounding bus shall be constructed with solid copper, and all connections shall be drilled and tapped. The ground bus shall be drilled and tapped for an additional 10 percent spare terminations. A bolted compression type 2/0 terminal lug shall be installed at each end of each ground bus to facilitate connection either to another ground bus in a connected adjacent enclosure or to Buyer's 2/0 AWG stranded copper ground cable.

3.6.5.3 Equipment Safety Ground	The equipment safety ground bus shall be solidly bolted and electrically bonded to the enclosure structure. Where enclosures are to be connected together after final installation, each end of the safety ground bus will include provisions for connection to the adjacent enclosure safety ground bus. All non-current carrying removable metal components, including the enclosure door(s) and back panel, shall be bonded to the equipment safety ground bus. Components shall not be grounded to each other via a common wire connecting the components to the equipment safety ground.
3.6.5.4 Isolated Signal Ground	The isolated signal ground shall be electrically isolated from the enclosure structure and the safety ground throughout the packaged system. Instrument cable shields and signal common conductors shall be connected to the isolated signal ground bus, unless otherwise required by the manufacturer. Each signal ground conductor shall be fastened to the isolated signal ground bus. For junction boxes with signal wiring going back to the Buyer's control system, the cable shield shall be terminated on an isolated terminal block and carried back to a ground supplied by the Buyer, no isolated signal ground is required.
3.6.6 Electrical and Wiring Requirements	
3.6.6.1 General	Power shall not be connected in series ("daisy chained") from instrument to instrument; however, the bridge or comb jumpers may be used on the supply side of the circuit breakers. A fuse and circuit breaker directory shall be contained in a holder permanently affixed on the inside of each door or back-panel and protected by a clear window.
3.6.6.2 Instrument Mounting	The Supplier shall mount, connect and wire each instrument or control device such that adjustment, maintenance, removal and replacement may be accomplished in a safe manner without interruption of service to adjacent but unrelated equipment and without placing undue stress on installed wiring or devices. Accommodations for strain relief shall be made when routing wire to hinged enclosure doors and shall be wrapped with spiral wire wrap.
3.6.6.3 Terminal Blocks	Terminal points shall be used for only one wire unless specifically identified for more than one wire by an NRTL. Wire splicing shall not be used unless approved by the Buyer. Bridge or comb jumpers shall be used for adjacent terminal connections. Jumpers shall not be installed on the field side of the terminal strip. Terminal blocks shall incorporate the following features: 1. Space saving design 2. Screw clamp wire connection 3. Single level configuration 4. Integral test facilities 5. DIN-rail (35mm) mounted Isolating type terminal blocks shall be Weidmuller "W" series, Allen Bradley 1492-JKD3TP, Phoenix Contact, or Buyer approved equal. Non-isolating feed-thru terminal blocks shall be Weidmuller "W" series, Allen Bradley 1492-W4, Phoenix Contact, or Buyer approved equal. Terminal blocks for connecting the incoming power supply shall be capable of connecting #4 AWG to #12 AWG conductors, such as Allen Bradley 1492-W16S, or Weidmuller WDU 35. The terminal blocks for incoming 120 VAC power and 120 VAC power distribution shall provide separation between control/instrumentation power and enclosure utility power, with separate termination points for each. Enclosure utilities include convenience accessories, cooling fans and space heaters. All terminal blocks shall be identified by a unique terminal block number and approved by the Buyer.

3.6.6.4 Power Disconnect	Each incoming power supply shall be provided with over-current protection and shall have a manual electrical power disconnect device mounted on or near the equipment in an easily accessible location. The electrical power disconnect device may be a single device or multiple devices for individual circuits. Each incoming 120 VAC power circuit shall be filtered with a 20 amp surge protection device providing a minimum of 300 joules of protection. Each incoming 480 VAC power circuit shall be filtered with a 15 amp surge protection device providing a minimum 1200 Joules of protection. All disconnects for a single piece of equipment shall be grouped together and shall be clearly identified as to their purpose, and the system and equipment being disconnected.
3.6.6.5 Over-current Protection	Each device that uses 120 VAC for power shall have individual connections protected via rail mounted circuit breakers or fuses. The circuit breakers used for individual control or power circuit protection within the enclosure shall be thermal magnetic breakers. The circuit breakers used for individual control or power circuit protection external to the enclosure shall comply with UL489 and be Dual-In-Line, DIN type with lockout adapters, such as Weidmuller 9926 or Allen Bradley 1489.
3.6.6.7 Wires and Cables	All instrument signal cables shall be of the type and specification as listed in Appendix C - Instrumentation Cable Schedule. Power cable, wire size and type shall be in accordance with NFPA 70-1999, and shall have a minimum 90 °C continuous rating. All cable insulation and jacket material shall be resistant to heat, moisture, impact, ozone, and meet or exceed the following requirements: • 300 V rated for low voltage instrument cables (up to 120 VAC and 125 VDC) • 600 V rated for power/motor control cables (up to 480 VAC and 250 VDC) The wire insulation color for single conductor wiring inside of enclosures shall be: • Black, 600V - Ungrounded conductors 50 VAC or more • White - Grounded conductors 50 VAC or more • Green - Equipment grounding conductor • Green/Yellow tracer - Isolated instrument grounding conductor • Light-Medium Blue - Ungrounded supply voltage less than 50 V (DC or AC) • Violet or Purple - Switched ungrounded voltage less than 50 V (DC or AC) • White/Blue tracer - Grounded or return supply voltage less than 50 V (DC or AC)
3.6.6.8 Bushings	Where a conduit enters an enclosure, a bushing shall be provided to protect the wire insulation from damage due to sharp metal edges. The bushing system shall match the NEMA rating of the enclosure.
3.6.7 Accessibility and Maintenance	Enclosures shall be accessible from the front with sufficient room for maintenance. Clearances for electrical enclosures shall meet requirements in NFPA 70-1999. Junction boxes containing only terminal blocks and wire (no active components) do not require working clearance unless they are expected to require maintenance while energized. Access to enclosure internal components or equipment shall not require the use of hand tools other than to open the door. Access to any component within the enclosure for maintenance or replacement shall not be prevented by proximity to other components within the enclosure. Equipment mounted in the rear of the enclosure shall be on a back-panel and positioned to facilitate removal and replacement. The enclosures shall be designed so that tools and test equipment may be used to accomplish all necessary adjustments, maintenance, cleaning, testing, and calibration. If specialized tools are needed for adjustments, maintenance, cleaning, testing, and calibration, the Supplier shall provide two sets per order to Buyer upon delivery. Test points and calibration areas shall be accessible, clearly identified, and labeled. Adequate space shall be provided for removal and replacement of individual instruments or components located inside the enclosure. Equipment

	mounted in the rear of the enclosure shall be positioned to facilitate removal and replacement from the front of the enclosure.
3.6.7.1 Electrical Working Space and Dedicated Equipment Space	Electrical and control equipment enclosures shall be installed so that they comply with NFPA 70-1999 Section 110-26 and Sections 110-32 through 110-34, and Section 610-57 (for cranes) as shown in Exhibit 1, Electrical Requirements for Packaged Equipment, Appendix I.
3.6.8 Enclosure Nameplates and Labels	Buyer will provide the enclosure name, service description, and wire marker syntax and name/number. Nameplates, labels, and wire markers shall be clearly legible and constructed of durable material suitable for lasting 40 years in the target environment. They shall provide a high contrast between the background and the lettering; the background shall be white or near-white and the lettering shall be a dark, near black color. External enclosure nameplate shall be engraved with the equipment tag number and a very brief service description. The nameplates shall be attached to the enclosure by either cementing with an adhesive designed for the tag and enclosure materials and the environment where the equipment will be installed or using stainless steel screws, without violating the NEMA rating of the enclosure. The minimum character height for enclosure name/number shall be no less than 5/8 inch, all other information shall have a character height no less than 1/4 inch. Internal enclosure nameplates shall be provided for instruments, instrument accessories, switches, relays, terminal strips, lamps and equipment with a field wiring connection. Nameplates shall be visible from the front of the cabinet with the doors open. Internal enclosure nameplates shall be attached using an adhesive designed for the tag and enclosure materials. The minimum character height shall be no less than 1/8 inch. Safety Labels shall not be attached to removable items that could be replaced in a different orientation.
3.6.9 Human Factors	Controls, indicators, and the similar type devices shall be mounted between 36 and 60 inches above the floor.
3.7 Equipment Electrical Requirements	All Electrical equipment shall be in full compliance with NFPA 70-1999.
3.7.2 Discrete Interfaces	The Supplier shall provide isolated, dry contacts where hardwired signals from controls or monitoring equipment on Supplier's packaged equipment is required by the Buyer's control system. The interfaces are distinct from control systems communications interfaces described in paragraph 3.4.
3.7.3 Analog or Continuous Signal Interfaces	The Supplier shall provide current loop isolators where a continuous signal in the Supplier's system is required to be monitored by the Buyer's control system.
3.7.4 Surge Protection	The Supplier shall provide surge protectors for solid-state equipment, if not inherent in the equipment design. Minimum protection shall be at least 250 Joules and 500 Volts.
3.7.5 Arc Suppression	The Supplier shall provide and install a suitable arc suppression device or kickback diode across switched loads unless the switching component includes inherent arc suppression. Kickback diodes shall be supplied and installed on all inductive DC loads.
3.7.7 Conduit and cable	
3.7.7.1 Exposed conduit	Interconnecting wires and cables that are not crush resistant shall be installed in rigid, galvanized steel (RGS), Rigid Metal Conduit (RMC), Strut Channel wireway, wireway, enclosed bus or liquidtight flexible metal conduits. Conduit Support shall be selected to be appropriate for the environment.

3.7.7.2 Electrical wire and cables	Interconnecting wiring and cables shall be in accordance with Appendix C. Profibus or Foundation Fieldbus cables shall have approved protection including cable armor to be type ER crush resistant. All insulated cables shall meet the vertical tray flame test requirements of IEEE 383-1974 or IEEE 1202 or IEEE 1581. Power cable, wire size and type shall be in accordance with NFPA 70 - 1999, and shall have a minimum 90 °C continuous rating.
3.7.7.3 Separation	AC power shall be routed through separate raceways, wireways or separated with a divider from 24 VDC discrete and analog instrument signals within enclosures. Power and signal cabling shall not be run in parallel, except in separate raceways or wireways, and should only cross at a 90-degree angle. This includes wiring to door mounted instruments contained in spiral wrap. A minimum of 1/4" separation shall be maintained between power & instrumentation/signal wiring. Internal enclosure wiring shall be neatly dressed in slotted non-metallic wireways. The wireway shall be securely fastened to the enclosure back-panel. Non-metallic wireways shall be provided on the opposite sides of field terminations to be used by the Buyer. Adequate space shall be provided around terminal blocks to allow the Buyer to install, route and terminate cables. The field side wireway shall be designed for multi-core field cables with a minimum conductor size of # 14 AWG. Circuits of different voltages (service level) shall be terminated on physically separate terminal strips and clearly labeled to show the circuit voltage. Terminal blocks shall be segregated according to signal type. Instrumentation cables shall be terminated in separate junction boxes from the power and control cables.
3.7.8 Wire and Cable Markers	All Supplier provided wiring shall be identified at each end with a numbering system that is cross-referenced on all appropriate drawings. The wire-numbering scheme shall be proposed by the Supplier with Buyer's concurrence. Wire markers shall be indelibly, clearly, and legibly machine marked in black on white plastic sleeves. Markers shall be heat shrink type unless factory connected cable terminations precludes them, in which case UL listed self-laminating labels shall be used. Wires longer than 8" or wires that are not visible for the entire length shall have wire markers attached within a maximum of 2 inches from the termination of the wire. Jumper wires less than 8 inches long installed so the entire length of the wire and is visible may be marked with a single wire marker. Orientation of the wire marker shall be such that its identification is visible when viewed from the front of the enclosure. Junction box (JB) terminals shall have adequate space between them and the JB internal walls so connected cables and individual wire numbers can be easily read without disturbing the wiring within the JBs.
3.8 Process Connections, Tubing and Instrument Mounting	

3.8.1 Instrument Process Connections

The preferred orientation of process connections in horizontal piping is shown in Appendix A. The purpose, for all pipe runs for instrumentation use, is to avoid gas pockets in liquid and vapor sensing lines and to avoid liquid pockets in gas sensing lines. Sensing lines for gas measurements shall slope downward toward the process at least 1/4" per foot. Sensing lines for liquid shall slope downward toward the instrument at least 1/4" per foot. Measurement of pressure or flow in steam lines or condensable vapor lines shall be provided with condensate pots to ensure known liquid fill level in sensing lines.

Piping specifications are generally as required in the process piping section of the primary equipment specification. Pressure measurement connections shall be 3/4 inch except where the process piping is 1/2 inch or less. If the process piping is 1/2 inch or less, the instrument connection shall be 1/2 inch. Instruments mounted in-line or tanks shall be installed per manufacturer's requirements. Welded process connections shall be socket or butt welded per the requirements of the piping specification in the primary equipment specification.

Generally, provide connections on piping and vessels for instruments in accordance with the following:

Type of Measurement	Screwed	Socket Welded	Flanged
Analyzer	¾"	-	1 ½"
Flow			
Orifice Tap	½"	¾"	2"
Flow Tube Tap	¾"	¾"	2"
Level			
Differential Type			
Standard	½"	¾"	2"
Flange Mounted	-	-	3"
Ball Floated			
External Cage	1 ½"	1 ½"	1 ½"
Vessel Mounted	-	-	4"
Capacitance	1"	1"	3"
Radar	-	-	6"
Ultrasonic	1"	1"	3"
Purged Tube	½"	½"	6"
Bridle (Standpipe)	3"	3"	3"
Pressure			
Piping	¾"	¾"	-
Vessels	¾"	-	1 ½"
With Seals	-	-	3"
Temperature			
In Piping	1"	1"	1 ½"
In Vessels/Tanks	-	-	1 ½"

3.8.3 Thermowells

Thermowells shall be provided for each temperature sensor. Thermowells shall withstand two times the maximum system pressure where installed. Wake frequency calculation shall be performed using ASME PTC 19.3 to ensure that the velocity induced frequency is not more than 80 percent of the critical frequency during all modes of operation. Maximum stream velocities in temperature measurement shall be specified in the instrument data sheets.

All thermowells shall have sufficient extension to preclude interference with process pipe or vessel lagging (insulation).

The following are standard thermowell length, insertion (U) length and Lagging (T) length proposed for the project:

A. Threaded Thermowells

Line Size	"U" Length	Stem Length	Remarks
≤ 2"	2 1/2"	4"	Line swage or elbolet installation
3" & 4"	4 1/2"	6"	Elbolet or latrolet installation
4"	2 1/2"	4"	
6 & 8"	4 1/2"	6"	
10 & 12"	7 1/2"	9"	
≥14"	10 1/2"	12"	

Insulation Thickness	"T" Length	Remarks
2" & less	None	
3"	3 1/2"	
4"	4 1/2"	
5"	5 1/2"	
6"	6 1/2"	

B. Flanged Thermowells

Line Size	"U" Length	Stem Length	Insulation Thickness
3"			See note below
4"			See note below
6"		9"	See note below
			See note below
		12"	See note below

Note: Approximately 6" clearance between the top of line and the top of well flange face available for insulation.

3.8.8 Instrument Location and Mounting

Instrument mounting locations shall be selected with consideration of both function operation and accessibility requirements for maintenance. Instrumentation should not be mounted on vibrating equipment or light duty support. Instruments shall not be mounted on handrails or safety railings. Instrument mounting bolting and hardware shall be ASTM A276, type 316L/ASTM A193 Grade B8M.

3.8.8.2 Accessibility Requirements

Each instrument shall be installed so as to allow adequate safe access for both operation and maintenance.

3.8.9 Protection of Instruments from Environment

Instruments shall be protected from normal environmental conditions which include the external corrosiveness of air, ambient temperature, humidity, etc.. The type of measurement being performed will determine whether the protection is required to avoid the solidification of high freeze point process fluids, condensation of vapors, effect of solar heat on measurement electronics and its accuracy, etc. Radiological tolerance instruments shall be specified as required.

4 Materials

4.1 General	Selection of material shall be based on fluid properties, environmental conditions, or as specified on the primary equipment specification and/or material requisition.
4.1.2 Instrument Manifold Valves	Integral 2-valve manifolds shall be supplied with pressure transmitters. Integral 5-valve manifolds shall be supplied with differential pressure transmitters. The manifolds shall be fabricated of ASTM A276, type 316L or better. These manifolds shall be manufactured by Hy-Lok or Buyer approved equal.
4.1.3 Enclosures, Panels, Cabinets, and Racks	In areas where radioactive contamination is identified as likely, only ASTM A276, type 316L enclosures, panels, and cabinets shall be used. The Rack structural components and all mounting material shall be constructed entirely with ASTM A276, type 316L or better. This includes bolts, nuts, washers, screws, retainer springs, and clips.
4.1.4 Instruments	Unless otherwise specified, instruments and accessories located in caustic or corrosive environments or exposed to process fluids or gasses, shall comply with ASTM A276, type 316L or better.
4.1.5 Wire supports and protection	Conduit and conduit supports in caustic, corrosive, or radioactive environments shall comply with ASTM A276, type 316L, or better.
4.2 Prohibited Materials	Prohibited materials are identified in 24590-WTP-LIST-ESH-16-0001.
4.4 Painting Requirements	Painting requirements do not apply to Stainless Steel. In general, instrument manufacturer's standard painting color and finish shall apply. However, Supplier shall also follow the project Shop applied special protective coating as required by the parent specification. Enclosure Backplanes shall be painted a gloss or semi-gloss type paint with light color to provide a high visual contrast between the backplane and the components mounted in the enclosure.
4.5 Storage of Special Materials	The Supplier shall cover or plug all openings on equipment, tubes, pipes, and instruments prior to shipment and/or for storage. Material used to cover or plug shall be compatible with the material of the component.
5 Fabrication	All instruments and electronic devices shall be installed in accordance with manufacturer's recommendations.
6 Tests, Inspections and Calibrations	Supplier shall perform instrument testing, inspection and calibration required to verify compliance with this exhibit. When requested, procedures shall be submitted for the Buyer's review and approval, and reports provided for records in accordance with the RFP or the Material Requisition.
6.1 General Requirements	All defects in materials, wiring and tubing detected as a result of testing shall be repaired or replaced by the Supplier at no additional cost to the Buyer. Buyer's Engineering representative shall witness Supplier's functional tests for more complex systems. All material defects and wiring errors shall have been corrected prior to Buyer's arrival to witness the functional demonstration. Supplier shall allocate sufficient time in the project schedule to accommodate this requirement. Buyer will advise Supplier of any such witness tests.
6.2 Factory Acceptance Tests	
6.2.1 Burn-In of Components	Instrumentation and controls provided by the Supplier that contain solid state components shall be subjected to burn-in as required. Burn-in duration shall be 72 hours minimum. The Buyer will be invited when this Test will be conducted.
6.2.2 Wire Insulation Testing	The Supplier shall isolate all instruments and control systems before performing a megger test.
6.2.3 Wire Continuity	All wiring provided by the Supplier shall be verified 100% point to point continuity test.

	Wiring errors detected shall be corrected and/or drawings corrected as appropriate prior to Buyer's inspection.
6.2.4 Functional Testing	Software functional testing is defined in 245490-WTP-3PS-JQ00-T0004. Where specified, the supplier shall perform instrumentation functional testing to demonstrate to the Buyer the functionality of the system. A simulated input signal shall be injected, varied over the full range for each device, calibrated and checked for correct operation. Each control circuit or control logic element provided shall be checked for correct operation by simulating inputs, actuating switches and monitoring outputs, indicating lights, etc. Failure to perform such tests or test failures shall be cause for rejection of part or all of the system components.
6.2.5 Pressure Tests	Supplier shall pressure test all pressure retaining components. ASME B31.3 chapter VI shall be used as a minimum standard of acceptance. Pressure testing for liquid systems shall be done with potable water with a halogen content not to exceed 200 ppm.
6.2.6 Calibration Test	Instruments shall be calibrated with test and calibration equipment that are traceable to NIST standards. Supplier shall provide certification of calibration for all test equipment used to calibrate instruments.
6.2.7 Final Inspection	Supplier shall perform all necessary inspections to verify compliance with this exhibit. Inspections are to be completed prior to delivery or presentation of this equipment to the Buyer's representative for final inspection. A final inspection, if required in Part 2, Attachment SQ of Material Requisition, will be made by Buyer's representative.
7 Packaging, Handling and Storage	Refer to Packaging, Handling and Storage Requirements specification 24590-WTP-3PS-G000-T0003 for general requirements and Material Requisition or Subcontract package for specific requirement of each instrument.
8 Identification	
8.1 Instrument Nameplate	Each instrument shall have nameplate information that includes following: <u>Applicable to ALL Instrumentation</u> • Manufacturer's Name • Manufacturer's model and serial number • Buyer's Purchase Order No. • Buyer's Item No. • Buyer's Tag Number <u>Applicable to PROCESS Instrumentation</u> • Nominal Pipe size, inches • Body material • Size • Minimum and Maximum flowrate • Meter Factor • Pressure and Temperature rating • Flow direction arrow and/or words IN and OUT on the piping connections <u>Applicable to ELECTRONIC Components</u> • Power rating • Electrical Area Classification • Approvals and Listings per NEC Where the combination of manufacturer's standard nameplate and instrument body stampings are unable to accommodate all of the required and applicable information, a separate stainless

	steel nameplate shall be provided to include the Buyer's tag number, PO number, and all of the applicable missing information. This separate stainless steel nameplate shall have the information impressed, stamped, or etched directly on the stainless steel surface. The nameplate, where physically possible, shall be secured to the body of the instrument by corrosion resistant screws tapped into a low stress area of the assembly, so the structural integrity and functional capability of the assembly are not impaired. If it is not physically possible to secure the nameplate to the body of the instrument, then the nameplate shall be attached using a stainless steel wire. To fully identify instrumentation in a packaged equipment skid, ancillary or daughter instrumentation that are included in the "package" or "skid" tags shall identify 1) Parent Equipment Number and 2) Buyer's Tag Number. <u>Panel Mounted Instrument Nameplate</u> In addition to the nameplate requirements for instruments, each panel mounted instrument shall be identified by tag number (Buyer provided tag number). Nameplates shall be clearly legible and constructed of durable material suitable for lasting 40 years in the target environment. They shall provide a high contrast between the background and the lettering; the background shall be white or near-white and the lettering shall be a dark, near black color. Letters shall be a minimum of 1/8 inch in height. Nameplates shall be attached to the panel by either cementing with epoxy or using stainless steel drive screws without violating the NEMA rating of the enclosure.
11 Documentation and Submittals	Refer to the RFP or the Drawings and Data Requirements of the Material Requisition and the following for specific requirement of each instrument.
11.1 Instrument Tagging	Instrument tag numbers will be assigned and provided by the Buyer to the Supplier. The Supplier shall incorporate these tag numbers into the design documents and shall comply with instrument identification requirements.
11.2 Drawings and Data	
11.2.1 Instrument Data Sheets	
11.2.1.1	Deleted.
11.2.1.2	Instrument specification datasheets should be of ISA 20 compliant format or Bechtel standard forms can be provided on request.
11.2.1.3	Instrument specification shall include sizing/selection basis for all control valve trim, valve actuators, pressure relieving devices, and flow devices. Wake frequency velocity limitations shall be documented for insertion instruments, as applicable (e.g. thermowells, pitot tubes). Information may be included in datasheet or as a separate submittal. See also Section 11.4.4.

11.2.2 Instrument List	The Buyer will supply an equipment instrument list in MS Access format which lists each instrument and is arranged in numerical order. The Supplier shall populate the instrument list contents including deleting and adding instrument records. The fields required to be populated are as follows: • Instrument tag number (B) • Seller's referenced tag number, if applicable (S) • Service description (B/S) • Instrument type (B/S) • Signal type (B/S) • P&ID number (B) • Data sheet number (S) • Location drawing number (B) • Instrument installation details (*) • Manufacturer name (S) • Model number (S) • Calibration range of instrument (S) • Set point (S) • Wiring diagram number (*) • Schematic drawing number (*) • Device address of serial communication link data (B) • I/O address of serial communication link data (B) • Instrument accuracies (*) • Shipped loose (S) The letters next to the instrument fields above indicate the following: (B) – Bechtel to provide (S) – Seller to provide (B/S) – Bechtel to preload information, Seller to verify (*) – Seller to provide, if applicable The list shall include: The performance specifications for nonnal operation and under conditions existing during and following The load, pressure, voltage, frequency, and other characteristics, as appropriate, for which the performance specified can be ensured.
11.2.3 Panel, Cabinet, Enclosure Outline and Dimensional Drawings	Certified outline and dimensional drawings shall show the size and location of electrical, pneumatic and service connections and information necessary to locate and mount the equipment, if it is to be mounted by the Buyer. A dimensional layout drawing shall show the location of electrical and control equipment. This drawing will include the dimensioned outline of the required electrical working space boundary around electrical and control enclosure per paragraph 3.6.7.1, including the working space boundary required for all outward facing (facing out from skid) electrical and control enclosures. The outline and dimensional drawings shall also include the enclosure weights and approximate location of the enclosure center of gravity with all instruments and components installed. This drawing or a separate drawing shall include dimensional and material information for the enclosure base, including bolt location and size for permanent attachment of the enclosure(s) to the building structure. Outline and dimensional drawings shall be provided for all instruments shipped loose for Buyer's installation. The drawing shall include the instrument tag number.

11.2.4 Installation Details	Instrument installation details shall be submitted for the Buyer's review and one month prior to proceeding with instrument installations.
11.2.5 Wiring Diagrams	Point to point wiring diagrams provided by the Supplier shall include, but not be limited to the following features: • Identify all devices with the Buyer's tag numbers, where applicable • Identify grounding method for incoming cable shields • Be relative to the equipment or panel terminals • Show devices and their terminals in relative location • Include contact developments for control switches, pushbuttons and relays.
11.2.7 Instrument Loop Diagrams	Loop diagrams depicting the wiring between components of electronic analog loops and discrete (on/off) loops shall be provided. These drawings shall contain, as a minimum all the information required by ISA S5.4 Figure 3 with notes and drawing references. The interface between Supplier's and Buyer's equipment, wiring and instruments shall be shown in detail, including terminal and wire identification. Electronic loop diagrams shall show Supplier's grounding and shielding provisions. In the case of bussed network instruments, network segment drawings shall be provided in lieu of loop diagrams.
11.2.10 Software Documents	The requirements for software documentation submittals is included in 24590-WTP-3PSJQ00-T0004.
11.2.11 Cable Block Diagrams	Cable Block diagrams shall identify the relationship of all cabling with cable numbers that interconnect between panels, junction boxes and components. These diagrams shall identify the size and number of conductors in each cable and shall be submitted prior to fabrication. Cables that will be provided and installed by Buyer will be identified on the cable block diagram. The Supplier shall identify the equipment breakdown for shipping that identifies those cables that need disconnecting for shipment. Buyer will provide tag numbers for all junction boxes and panels that Buyer has to terminate to.
11.2.12 Manufacturer's Technical Literature	Supplier shall provide manufacturer's technical literature for all technical components and instrumentation provided within the Supplier's package.
11.2.13 Certificates and Inspection reports	The Supplier shall provide all NRTL Certificates and field evaluation reports required per section 1.8. The Supplier shall provide manufacturer's certification of material used in fabrication of instruments that must operate in the specified radiation conditions per section 1.6.5.
11.3 Procedures	
11.3.1 Site Storage and Handling Procedure	Supplier to provide site storage and handling procedures in accordance with the primary specification or Drawings and Data Requirements of the Material Requisition.
11.3.2 Functional Test Procedure	Supplier shall submit equipment functional test procedures that will be used to demonstrate to Buyer's satisfaction that the equipment will function in accordance with the specified requirements. Procedures shall be submitted for Buyer's review in accordance with the Drawings and Data Requirements of the Material Requisition. Procedures shall be submitted at least one month prior to scheduled performance of the functional demonstration to be witnessed by Buyer's engineer(s). Scope of these tests shall be agreed to between the Buyer and Supplier via review of the proposed test procedure. The functional test procedure shall include: • Requirements for maintaining records of functional tests • Description of method used to track status of testing • Requirements for inspection prior to testing to determine test readiness • Procedures for documenting failures and errors encountered • Procedures for documenting agreed test modifications or procedure corrections deemed necessary to resolve a test finding

	• Method of documenting final resolution of test anomalies • Acceptance criteria
11.3.3 Operating, Startup and Shutdown Procedures	Supplier shall provide procedures in hard copy as well as in electronic describing the method of starting, operating and shutting down the equipment package.
11.4 Calculations	Calculations shall be submitted for Buyer's verification as indicated in the RFP or the Drawings and Data Requirements of the Material Requisition. Calculations shall be orderly, complete, and sufficiently clear to permit verification. Calculations shall meet the requirements specified in 24590-WTP-3PS-G000-T0014, Engineering Specification for Supplier Design Analysis.
11.4.1 Electrical Load	Supplier shall submit calculations showing the electrical power consumption, both peak and continuous for each power voltage level required by the Supplier to operate all equipment and instruments provided.
11.4.2 Heat Loads	Supplier shall submit a list of all calculated and estimated control panel/cabinet heat loads.
11.4.4 Sizing Calculations	Supplier shall provide, calculations used to size modulating control valves per ISA S75.01, head producing flow elements, and pressure relieving devices per API RP 520 PTI.
11.5 Manuals	Operation and maintenance (O&M) manuals in both hard copy and electronic form shall be provided for the equipment package. The O&M manual shall include startup, operating and shutdown procedures as well as periodic and preventative maintenance procedures. The requirements for the package O&M manuals are contained in the Material Requisition.
11.6 Schedules	
11.6.1 Material Schedule	A schedule of material listing all instruments and devices to be located on or supplied with the equipment package shall be provided. The schedule or bill of material shall contain Buyer's tag numbers where applicable, manufacturer, model number, part number, description, quantity and brief material description.
11.6.2 Spare Parts List	Supplier shall submit a recommended spare parts list covering all items within Supplier's scope. The spare parts recommendation shall be based upon Supplier's experience with component failure, maintenance requirements, environmental conditions, as well as consideration of the total quantities of each device supplied by Supplier. Supplier's recommendation shall include both construction/commissioning and operating spares. Construction/commissioning spare parts are those parts to be held for use during construction, testing, and commissioning. Operating spare parts are those to be held for the first year of operation of the plant.

Appendix A
Sensing Line Process Connection Orientation

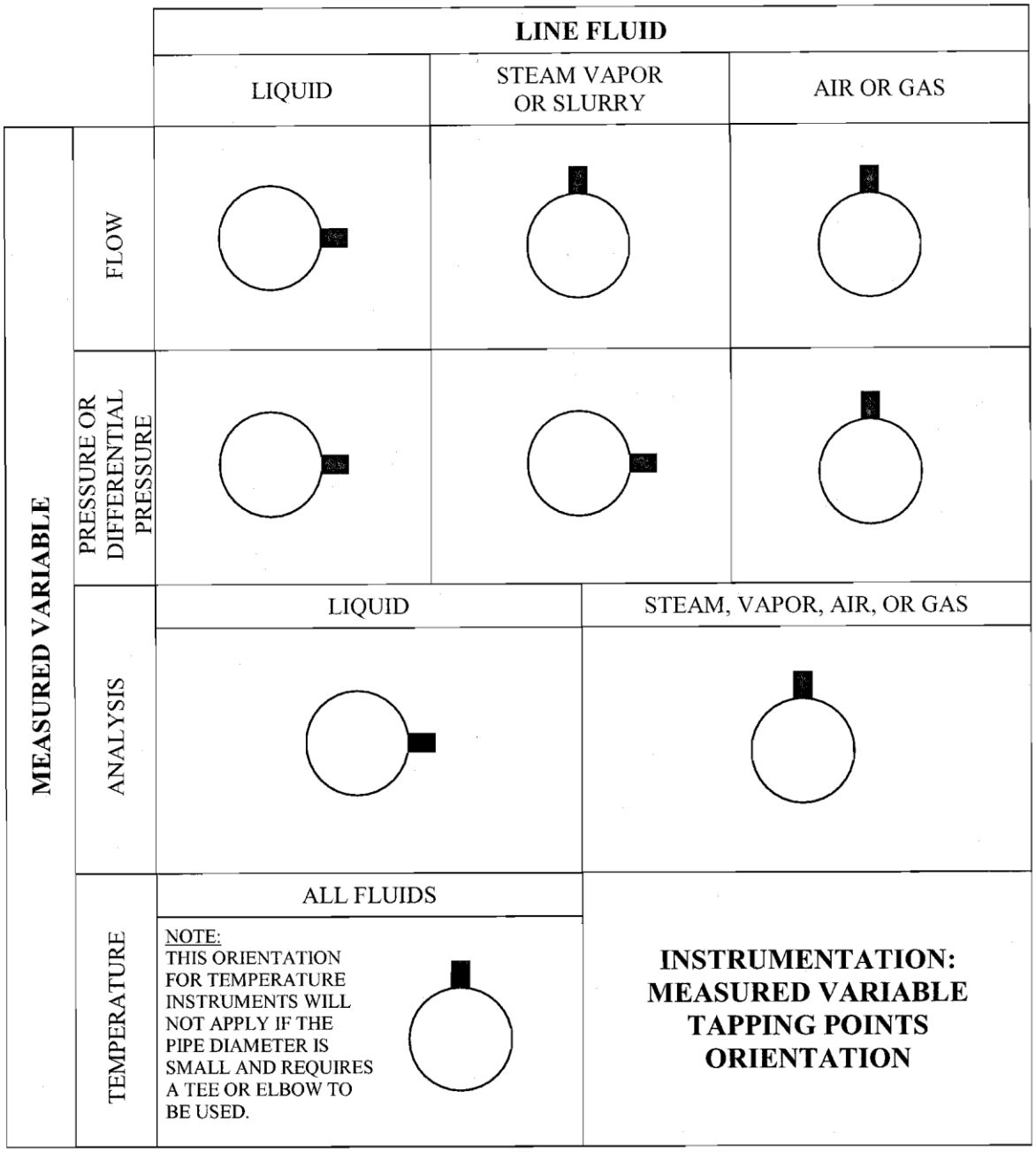

Appendix B

Preferred Instrument Supplier List

Description	Subgroup	Preferred Supplier(s)	Comments
On / Off Actuators	Electric	Beck	
		ALUM	
		Flowserve (Limitorque)	
		Rotork	
	Hydraulic	GPE	
		MEA	
		Pantex	
		Moog	
	Pneumatic	Crane (Xomox)	
		~~Emerson (Bettis)~~	
		~~Hytork~~	~~Rad Tolerant. Part of Emerson~~
		Flowserve (Valtek)	
		Flowserve (Automax)	
		Tyco (Keystone)	
		Morin	
Alarms	Annunciator	Ronan	
		Panalarm	
	Beacon light	Federal Signal	
		Panalarm	
	Horn	Federal Signal	
		Panalarm	
Analytical Devices	Conductivity	ABB	
		~~Emerson (Uniloc)~~	
		Foxboro (Invensys)	Have Rad Tolerant Insert Version
		Tyco (Teledyne Analytical)	
		Yokogawa	
	Density	Endress+Hauser	
	Density, nuclear	Endress+Hauser	
		~~Ohmart~~ VEGA America's, Inc.	
		Texas Nuclear	

Description	Subgroup	Preferred Supplier(s)	Comments
		K – Ray	
	Environmental Rad	Eberline Instrument	
		EG & G Ortec	
		Lab Impex Systems	
		Ludlums	
		Nuclear Research Corp	
		Canberra	
	Lab Radiometric (swab)	Eberlene Instrument	
		EG & G Ortec	
		Lab Impex Systems	
		Ludlums	
		Nuclear Research Corp	
		Teledyne	
	Moisture	Ametek	
		Dupont	
		Panametrics	
		~~Emerson (Rosemount Analytical)~~	~~FF Compliant~~
		Shaw	
		Teledyne	
	NOx		FF Compliant
		Teledyne	
		Horiba	
	Oxygen	Ametek	
		Orbisphere	
		Panametrics	
		Teledyne	
		Servomex	
		~~Emerson (Rosemount Analytical)~~	~~FF Compliant~~
	Personnel Radiation	Eberline Instrument	
		E G & G Ortec	
		Lab Impex Systems	
		Sorrento	
		Victoreen	
	pH	ABB	FF Compliant
		~~Emerson (Uniloc)~~	
		Endress+Hauser	
		Foxboro (Invensys)	
		TBI-Bailey	

Description	Subgroup	Preferred Supplier(s)	Comments
		Tyco (Teledyne Analytical)	
		Yokogowa	FF Compliant
	Photo Absorbtion (IR, UV)	ABB Process Analytics	
		Ametek	
		~~Emerson (Rosemount Analytical)~~	
		Orbital	Was Foxboro
		Servomex	
		Teledyne	
	Process Radiological	Canberra	
		EG & G ORTEC	
		Lab Impex	
	Stack Discharge	Air Monitor	
		Ametek	
		~~Emerson (Rosemount Analytical~~)	
		Teledyne	
		Westinghouse	
	Vibration	Bently Nevada	
	Volatile Organic Compounds (VOC)	Ametek	
		~~Emerson (Rosemount Analytical~~)	
		Teledyne	
CCTV System		IST Rees	
Conductor Bar		Electromotive	
		Insul 8	
Control Enclosures	Marshalling Cabinets / Junction Boxes	Hoffman	
		Rittal	
DCS		ABB	
Flow Devices	Averaging Pitot Tubes	ABB (Taylor)	
		Air Monitor Corp.	
		~~Emerson (Dieterich Standard)~~	
	Coriolis meters	ABB	

Description	Subgroup	Preferred Supplier(s)	Comments
		Endress+Hauser	
		~~Emerson (Micro Motion)~~	
	Flow nozzles	Daniel	
		Fluidic Techniques	
		Vickery Simms	
	Magmeters	ABB (Fisher & Porter)	
		~~Emerson (Rosemount)~~	
		Foxboro	OK for Rad Service
		Krohne	OK for Rad Service
	Orifice plates	Daniel	
		Fluidic Techniques	
		Vickery Simms	
	Positive displacement meters	Badger	
		~~Emerson (Brooks)~~	
		Daniel Industries	
		FMC Energy Systems	
	Rotameters	ABB (Fisher & Porter)	
		Brooks	
		King	
		Krohne	
		Wallace & Tiernan	
	Thermal meters	Eldridge Products	
		Fluid Components Inc.	
		Kurz	
		Sierra	
	Turbine meters	Daniel	
		F & P	
		FMC Energy Systems	
		McCrometer	
	Venturi Tubes	Daniel	
		Fluidic Techniques	
		Kent	
	Vortex meters	ABB	
		Foxboro	
		Yokogawa	

Description	Subgroup	Preferred Supplier(s)	Comments
	Wedge meters	ABB (Taylor)	
Foundation® Fieldbus Wiring Components	Connector	Pepperl+Fuchs	V9-FA-M-S V9-FA-F-S V9-FA-M-S-R V9-FA-F-S-R
	Power Conditioner	Pepperl+Fuchs	
	Spur blocks	Pepperl+Fuchs	F2-JBSC-8.FF.7/8S F2-JBSC-4.FF.7/8S
	Terminator	Pepperl+Fuchs	V9-FT-S
Gas Detectors (AREA)	Ammonia	Bacharach	
		Det-Tronics	
		Drager (SKC)	
		General Monitor	
		Servomex	
		MSA	
		~~Emerson (Rosemount Analytical)~~	
	Carbon dioxide	Ametek	
		Bacharach	
		Drager	
		Det-Tronics	
		MSA	
		Servomex	
		Teledyne	
	Combustibles	Bacharach	
		Det-Tronics	
		Drager	
		General Monitors	
		MSA	
	Hydrogen	Bacharach	
		~~Emerson (Rosemount Analytical)~~	
		Foxboro	
		General Monitor	
		Teledyne	
		Zellweger	For vessels
		MSA	
	Nitrogen Oxides	Beckman	
		Drager	

Description	Subgroup	Preferred Supplier(s)	Comments
		Horiba	
		Lear Siegler	
		~~Emerson (Rosemount Analytical)~~	
		Servomex	
		Teledyne	
Gauges	Bullseye Sight glass	OPW	
		Brooks	
		Ernst Gage Co.	
		Jacoby-Tarbox	
		Kobold	
	D/P	ABB (Taylor)	
		Ashcroft	
		Dwyer	
		ITT Barton	
	Level Glass	Daniel	
		Jerguson	
		Penberthy	
		Kobold	
		Ernst	
	Pressure	Ashcroft	
		Marsh	
		U.S. Gauge	
		Weston	
	Temperature	Ashcroft	
		U.S. Gauge	
		Weston	
Instrument Bulks	2-5 Valve Manifolds	Hy-Lok	
		Swagelok	
		Parker-Hannifin	A-LOK Series
	Air Filter Regulator	~~Emerson (Fisher)~~	
		Moore Products	
		Norgren	
	Instrument Valves	Anderson-Greenwood	
		Swagelok	
		Parker-Hannifin	A-LOK Series
	Tube Fittings	Swagelok	
		Parker-Hannifin	A-LOK Series

Description	Subgroup	Preferred Supplier(s)	Comments
		Hy-lok	
		Tylok	
Intelligent Drive	ASD's	Mitsubishi Electric Automation	
		SEW Eurodrives	
		ABB	
		Electromotive Systems	
	Flux Vector Drive	Mitsubishi Electric Automation	
		SEW Eurodrives	
		ABB	
	Servos	Mitsubishi Electric Automation	
		Control Techniques	
Intelligent Positioning Device	Absolute Encoders	Stegmann	Magnetic/Profibus
		Dynapar	Optical/Profibus
	Incremental Encoders	Dynapar	For Mitsubishi drives
		SEW Eurodrives	For SEW drives
	Laser Positioning System	Moduloc	
		Trimble	
	Resolvers	Harowe	
		SEW Eurodrives	
Key Interlock System		Castell	
		Kirk Key	
		Allen Bradley	
Level Transmitter	Level, Displacer	~~Emerson (Fisher~~)	
		Magnetrol	
		Masoneilan	
	Nuclear	K-Ray	
		~~Ohmart Vega~~ VEGA America's, Inc.	
		Texas Nuclear	
	Photoelectric	Banner	
		Allen Bradley	
		Honeywell	

Description	Subgroup	Preferred Supplier(s)	Comments
	Radar/RF	DrexelBrook	
		Enraf	
		Endress+Hauser	
		K-Tek	
		Khrone	
		Magnitrol	
		~~Ohmart Vega~~ VEGA America's, Inc.	
	Ultrasonic	Allen Bradley	
		Consilium	
		Drexelbrook	
		Honeywell	
		Scientific Technologies	
Network Equipment	Current / Fieldbus	~~Smar~~ Pepperl Fuchs	LB 8110
	Ethernet Switch	Cisco	Industrial Rated
		Hieschmann	Industrial Rated
		Sixnet	Industrial Rated
	Fiber Optic Media Conversion	Hirschmann	
	Fiber Optic Enclosures, Housings, and Patch Plates	Corning	
	Fiber Optic Patch Cables	Corning	
	Fieldbus / Current	~~Smar~~ Pepperl Fuchs	LB 8110
	Temperature (E)	Acromag	
		Action Instruments	
		E & H	
		Foxboro	
		Honeywell	
		Moore Industries	
		~~Emerson (Rosemount)~~	
		Yokogawa	
Programmable Logic Controller (PLC)	Standard	ABB	
	TMR/ Safety	Triconex	

Description	Subgroup	Preferred Supplier(s)	Comments
Pressure Transmitter	Pressure / DP	Bailey	
		~~Emerson (Rosemount~~)	
		Foxboro	
		Honeywell	
		Yokogawa	
	Pressure / DP Draft Range	Air Monitor	
		Bailey	
		Druck	
		~~Emerson (Rosemount~~)	
		Yokogawa	
	Pressure / DP, Rad Tolerant	Druck	
		~~Emerson (Rosemount~~)	
		Weed	OK for Rad service
	Pressure / DP Draft Range, Rad Tolerant	Bailey / ABB	
		Druck	
		~~Emerson (Rosemount~~)	
		Solarton – Mobrey	
Power Supply	24V / 12V	Acopian	
		ABB	
		Phoenix Contact	
		SOLA Hevi Duty	
		Siemens	
Profibus DP®	Terminating Connector	Phoenix Contact	
		Siemens	
Purge System		Bebco Industries	
Pushbutton/ Indicating Lights		Allen-Bradley	800H series 800T series
		General Electric	
		Square D	
Relays	Electromagnetic	Allen-Bradley	700 series
		Omron	
		Potter & Brumfield	

Description	Subgroup	Preferred Supplier(s)	Comments
	Pneumatic	Moore Products	
	Timer Relay	Allen-Bradley	
		Omron	
Speed		Air-Pax	
Switches	Level, Capacitance	Drexelbrook	
		Endress+Hauser	
		Magnetrol	
	Level, Float	Bestobell	
		Hawker Automation	
		Magnetrol	
		Sigma Controls	
	Mechanical Limit switch	Allen - Bradley	
		Square D	
		Honeywell	
	Photoelectric	Allen - Bradley	
		Pepperl + Fuchs	
	Pressure / Differential Pressure	Ashcroft	
		Dwyer	
		ITT Neodyne	
		Static-O-Ring	
		United Electric	
		ITT Barton	
	Proximity Position Switch	GO	Magnetic for R5 areas
		Pepperl + Fuchs	With mini-connectors
		Turck	With mini-connectors
		Klaschka	Radiation Hardened for R5 Areas
		Namco	OK for Rad service
		Top Worx	GO Switch is UL Listed, but too small to label.
	Temperature	Ashcroft	

Description	Subgroup	Preferred Supplier(s)	Comments
		Custom Component	
		United Electric	
		Ashcroft	
	Thermal Flow	FCI	
Temperature Element	RTD	Daily Thermetrics	
		IST Conax Nuclear	ITS OK for Rad service
		~~Emerson (Rosemount)~~	
		Temp-Pro Inc.	
		Thermoelectric	OK for Rad service
		United Electric	
	Thermocouple	Daily Thermetrics	
		IST Conax Nuclear	ITS
		~~Emerson (Rosemount)~~	
		Temp-Pro Inc.	
		Thermoelectric	OK for Rad service
		United Electric	
	Thermowell	Daily Thermetrics	
		IST Conax Nuclear	ITS OK for Rad service
		~~Emerson (Rosemount)~~	
		Temp-Pro Inc.	
		Thermoelectric	OK for Rad service
		United Electric	
Temperature Transmitter	Temperature	ABB	
		~~Emerson (Rosemount)~~	
		Foxboro	
		Weed	
		Yokogawa	
Terminal Blocks		Allen - Bradley	
		Weidmuller	
		Phoenix Contact	
Transducers	E/I	Acromag	
		Action Instruments	
		Foxboro	
		Honeywell	
		Moore industries	

Description	Subgroup	Preferred Supplier(s)	Comments
	I/P	~~Emerson (Fisher)~~	
		Foxboro	
		Masoneilan	
		Moore Products	
	Isolators	ABB	
		Acromag	
		Action Instruments	
		Allen-Bradley	
		~~Emerson (Rosemount)~~	
		Moore Industries	
	Signal converters	Acromag	
		Action Instruments	
		~~Emerson (Rosemount)~~	
		Foxboro	
		Honeywell	
		Moore Industries	
Valves (valve, actuator & acc.)	Modulating	~~Emerson (Fisher)~~	
		Masoneilan	
		Valtek	
		Jamesbury	
		Argus	
		Samson	
	Process Regulator	~~Emerson (Fisher)~~	
		Masoneilan	
		Cashco	
	Pilot	ASCO	
		Skinner	
		Versa	
	Solenoid	ASCO	
		Versa	
		Automatic Valve	
Weight	Load Cells	Defiant	Rad Tolerant
		Sensotec	
		Mettler Toledo	

Appendix C
Instrumentation Cable Schedule

Cable Code		Cable Description	Specific Cable Specification	Application/ Comments	Circuit Identification	Suggested Vendor Cables	Cable General Specifications (superseded by specific cable specification)	Connector Details
Instrument cables- analog circuits	In SR	Analog signals						
1TSPR#16	X	Single twisted pr, #16AWG, 300V, ITC, PLTC	Single twisted pair with overall foil shield	Individual instrument signals, instrument 24 VDC power	Black, White		Cables UL listed as ITC and PLTC, 300 V insulation, UL1581 listed for 70,000 BTU vertical tray flame test; 100% foil polyester/aluminum individual and overall shields with 22AWG Drain wire. Each circuit shall have a minimum of 6-8 twists/ft.	
2TSPR#16	X	Two twisted shielded pr #16AWG, 300V, ITC,PLTC	Individually twisted shielded pairs with overall foil shield		Black, White conductors individual circuits numbered			
4TSPR#18	X	Four twisted shielded pr #18AWG, 300V, ITC,PLTC	Individually twisted shielded pairs with overall foil shield		Black, White conductors - individual circuits numbered			
8TSPR#18	X	Eight twisted shielded pr #18AWG, 300V, ITC,PLTC	Individually twisted shielded pairs with overall foil shield		Black, White conductors - individual circuits numbered			
24TSPR#18	X	Twenty Four twisted shielded pr #18AWG, 300V, ITC,PLTC	Individually twisted shielded pairs with overall foil shield		Black, White conductors - individual circuits numbered			
SA-1TSPR#16	X	Single twisted pr, #16AWG, 600V PLTC	Single twisted pair with overall foil shield	ITS -Individual instrument signals, instrument 24 VDC power	Black, White W/Blue Jacket		Cables UL listed as PLTC, 600 V insulation, UL1581 listed for 70,000 BTU vertical tray flame test; or IEEE 383 vertical flame test; or UL 1202; 100% foil polyester/aluminum individual and overall shields with 22AWG Drain wire. Each circuit shall have a minimum of 6-8 twists/ft.	
SA-2TSPR#16	X	Two twisted shielded pr #16AWG, 600V, PLTC	Individually twisted shielded pairs with overall foil shield	ITS- instrument signals, instrument 24 VDC power	Black, White conductors - individual circuits numbered W/Blue Jacket			
SA-4TSPR#18	X	Four twisted shielded pr #18AWG, 600V, PLTC	Individually twisted shielded pairs with overall foil shield	ITS- instrument signals, instrument 24 VDC power	Black, White conductors - individual circuits numbered W/Blue Jacket			
SA-8TSPR#18	X	Eight twisted shielded pr #18AWG, 600V, PLTC	Individually twisted shielded pairs with overall foil shield	ITS- instrument signals, instrument 24 VDC power	Black, White conductors - individual circuits numbered W/Blue Jacket			
SA-24TSPR#18	X	Twenty Four twisted shielded pr #18AWG, 600V, PLTC	Individually twisted shielded pairs with overall foil shield	ITS- instrument signals, instrument 24 VDC power	Black, White conductors - individual circuits numbered W/Blue Jacket			
SB-1TSPR#16	X	Single twisted pr, #16AWG, 600V PLTC	Single twisted pair with overall foil shield	ITS-Individual instrument signals, instrument 24 VDC power	Black, White W/Orange Jacket			
SB-2TSPR#16	X	Two twisted shielded pr #16AWG, 600V, PLTC	Individually twisted shielded pairs with overall foil shield	ITS- instrument signals, instrument 24 VDC power	Black, White conductors - individual circuits numbered W/Orange Jacket			
SB-4TSPR#18	X	Four twisted shielded pr #18AWG, 600V, PLTC	Individually twisted shielded pairs with overall foil shield	ITS- instrument signals, instrument 24 VDC power	Black, White conductors - individual circuits numbered W/Orange Jacket			
SB-8TSPR#18	X	Eight twisted shielded pr #18AWG, 600V, PLTC	Individually twisted shielded pairs with overall foil shield	ITS- instrument signals, instrument 24 VDC power	Black, White conductors - individual circuits numbered W/Orange Jacket			
SB-24TSPR#18	X	Twenty Four twisted shielded pr #18AWG, 600V, PLTC	Individually twisted shielded pairs with overall foil shield	ITS- instrument signals, instrument 24 VDC power	Black, White conductors - individual circuits numbered W/Orange Jacket			
SQ-1TSPR#16	X	Single twisted pr, #16AWG, 600V PLTC	Single twisted pair with overall foil shield	ITS-Individual instrument signals, instrument 24 VDC power	Black, White W/Yellow Jacket			

SQ-2TSPR#16	X	Two twisted shielded pr #16AWG, 600V, PLTC	Individually twisted shielded pairs with overall foil shield	ITS- instrument signals, instrument 24 VDC power	Black, White conductors – individual circuits numbered W/Yellow Jacket			
SQ-4TSPR#18	X	Four twisted shielded pr #18AWG, 600V, PLTC	Individually twisted shielded pairs with overall foil shield	ITS- instrument signals, instrument 24 VDC power	Black, White conductors – individual circuits numbered W/Yellow Jacket			
SQ-8TSPR#18	X	Eight twisted shielded pr #18AWG, 600V, PLTC	Individually twisted shielded pairs with overall foil shield	ITS- instrument signals, instrument 24 VDC power	Black, White conductors – individual circuits numbered W/Yellow Jacket			
SQ-24TSPR#18	X	Twenty Four twisted shielded pr #18AWG, 600V, PLTC	Individually twisted shielded pairs with overall foil shield	ITS- instrument signals, instrument 24 VDC power	Black, White conductors – individual circuits numbered W/Yellow Jacket			
1TST#16	X	Single twisted triad, #16AWG, 300V, ITC, PLTC	Single Twisted triad with overall shield	Single 3-wire RTD, single 3-wire proximity switch	Black, White(common), Red		Cables UL listed as ITC and PLTC, 300 V insulation, UL1581 listed for 70,000 BTU vertical tray flame test; 100% foil polyester/aluminum individual and overall shields with 22AWG Drain wire. Each circuit shall have a minimum of 6-8 twists/ft.	
2TST#18	X	Two twisted shielded triads, #18AWG, 300V, ITC	Individually shielded twisted triads with overall shield	Dual 3-wire RTDs	Black, White(common), Red			
SA-1TST#16	X	Single twisted triad, #16AWG, 600V, PLTC	Single Twisted triad with overall shield	Single 3-wire RTD, single 3-wire proximity switch	Black, White(common), Red W/Blue Jacket		Cables UL listed as PLTC 600 V insulation, UL1581 listed for 70,000 BTU vertical tray flame test; or IEEE 383 vertical flame test; or UL 1202; 100% foil polyester/aluminum individual and overall shields with 22AWG Drain wire. Each circuit shall have a minimum of 6-8 twists/ft.	
SA-2TST#18	X	Two twisted shielded triads, #18AWG, 600V, PLTC	Individually shielded twisted triads with overall shield	Dual 3-wire RTDs	Black, White(common), Red W/Blue Jacket			
SA-4TST#18	X	Four twisted shielded triads, #18AWG, 600V, PLTC	Individually shielded twisted triads with overall shield	Dual 3-wire RTDs	Black, White(common), Red W/Blue Jacket			
SB-1TST#16	X	Single twisted triad, #16AWG, 600V, PLTC	Single Twisted triad with overall shield	Single 3-wire RTD, single 3-wire proximity switch	Black, White(common), Red W/Orange Jacket			
SB-2TST#18	X	Two twisted shielded triads, #18AWG, 600V, PLTC	Individually shielded twisted triads with overall shield	Dual 3-wire RTDs	Black, White(common), Red W/Orange Jacket			
SB-4TST#18	X	Four twisted shielded triads, #18AWG, 600V, PLTC	Individually shielded twisted triads with overall shield	Dual 3-wire RTDs	Black, White(common), Red W/Orange Jacket			
SQ-1TST#16	X	Single twisted triad, #16AWG, 600V, PLTC	Single Twisted triad with overall shield	Single 3-wire RTD, single 3-wire proximity switch	Black, White(common), Red W/Yellow Jacket			
SQ-2TST#18	X	Two twisted shielded triads, #18AWG, 600V, PLTC	Individually shielded twisted triads with overall shield	Dual 3-wire RTDs	Black, White(common), Red W/Yellow Jacket			
SQ-4TST#18	X	Four twisted shielded triads, #18AWG, 600V, PLTC	Individually shielded twisted triads with overall shield	Dual 3-wire RTDs	Black, White(common), Red W/Yellow Jacket			
Instrument cables- digital circuits		**Discrete I/O**						
use 1TSPR#16 above	X	Single Twisted pr #16AWG, 300V, ITC, PLTC	Single twisted pair with overall foil shield	Individual instrument signals, instrument 24 VDC power			Cables UL listed as ITC and PLTC, 300 V insulation, UL1581 listed for 70,000 BTU vertical tray flame test; 100% foil polyester/aluminum individual and overall shields with 22AWG Drain wire. Each circuit shall have a minimum of 6-8 twists/ft.	
2TPR#16	X	Two twisted pr #16AWG, 300V, ITC, PLTC	Individually twisted pairs with overall foil shield	Valve limit switches, process switches	Black, White conductors - individual circuits numbered			
4TPR#18	X	Four twisted pr #18AWG, 300V, ITC, PLTC	Individually twisted pairs with overall foil shield	Valve limit switches, process switches	Black, White conductors - individual circuits numbered			
6 TPR#18	X	Six twisted pr #18AWG, 300V, ITC, PLTC	Individually twisted pairs with overall foil shield	Valve limit switches, process switches	Black, White conductors - individual circuits numbered			
8TPR#18	X	Eight twisted pr #18AWG, 300V, ITC, PLTC	Individually twisted pairs with overall foil shield	Valve limit switches, process switches	Black, White conductors - individual circuits numbered			

12TPR#18	X	Twelve twisted pr #18AWG, 300V, ITC,PLTC	Individually twisted pairs with overall foil shield	Valve limit switches, process switches	Black, White conductors - individual circuits numbered			
16TPR#18	X	Sixteen twisted pr #18AWG, 300V, ITC, PLTC	Individually twisted pairs with overall foil shield	Valve limit switches, process switches	Black, White conductors - individual circuits numbered			
24TPR#18	X	Twenty Four twisted pr #18AWG, 300V, ITC, PLTC	Individually twisted pairs with overall foil shield		Black, White conductors - individual circuits numbered			
use SA-1TSPR#16 above	X	Single twisted pr #16AWG, 600V, PLTC	Individually twisted pairs with overall foil shield	ITS- Valve limit switches, process switches			Cables UL listed PLTC, 600 V insulation, UL1581 listed for 70,000 BTU vertical tray flame tes, or IEEE 383, or UL 1202; 100% foil polyester/aluminum individual and overall shields with 22AWG Drain wire. Each circuit shall have a minimum of 6-8 twists/ft	
SA-2TPR#16	X	Two twisted pr #16AWG, 600V, PLTC	Individually twisted pairs with overall foil shield	ITS- Valve limit switches, process switches	Black, White conductors - individual circuits numbered W/Blue Jacket			
SA-4TPR#18	X	Four twisted pr #18AWG, 600 V, PLTC	Individually twisted pairs with overall foil shield	ITS- Valve limit switches, process switches	Black, White conductors - individual circuits numbered W/Blue Jacket			
SA-8TPR#18	X	Eight twisted pr #18AWG, 600V, PLTC	Individually twisted pairs with overall foil shield	ITS- Valve limit switches process switches	Black, White conductors - individual circuits numbered W/Blue Jacket			
SA-24TPR#18	X	Twenty Four twisted pr #18AWG, 600V, PLTC	Individually twisted pairs with overall foil shield	ITS- Valve limit switches, process switches	Black, White conductors - individual circuits numbered W/Blue Jacket			
use SB-1TSPR#16 above	X	Single twisted pr #16AWG, 600V, PLTC	Individually twisted pairs with overall foil shield	ITS- Valve limit switches, process switches				
SB-2TPR#16	X	Two twisted pr #16AWG, 600V, PLTC	Individually twisted pairs with overall foil shield	ITS- Valve limit switches, process switches	Black, White conductors - individual circuits numbered W/Orange Jacket			
SB-4TPR#18	X	Four twisted pr #18AWG, 600 V, PLTC	Individually twisted pairs with overall foil shield	ITS- Valve limit switches, process switches	Black, White conductors - individual circuits numbered W/Orange Jacket			
SB-8TPR#18	X	Eight twisted pr #18AWG, 600V, PLTC	Individually twisted pairs with overall foil shield	ITS- Valve limit switches, process switches	Black, White conductors - individual circuits numbered W/Orange Jacket			
SB-24TPR#18	X	Twenty Four twisted pr #18AWG, 600V, PLTC	Individually twisted pairs with overall foil shield	ITS- Valve limit switches, process switches	Black, White conductors - individual circuits numbered W/Orange Jacket			
SQ-2TPR#16	X	Two twisted pr #16AWG, 600V, PLTC	Individually twisted pairs with overall foil shield	ITS- Valve limit switches, process switches	Black, White conductors - individual circuits numbered W/Yellow Jacket			
SQ-4TPR#18	X	Four twisted pr #18AWG, 600 V, PLTC	Individually twisted pairs with overall foil shield	ITS- Valve limit switches, process switches	Black, White conductors - individual circuits numbered W/Yellow Jacket			
SQ-8TPR#18	X	Eight twisted pr #18AWG, 600V, PLTC	Individually twisted pairs with overall foil shield	ITS- Valve limit switches, process switches	Black, White conductors - individual circuits numbered W/Yellow Jacket			
SQ-24TPR#18	X	Twenty Four twisted pr #18AWG, 600V, PLTC	Individually twisted pairs with overall foil shield	ITS- Valve limit switches, process switches	Black, White conductors - individual circuits numbered W/Yellow Jacket			
2TTR#18	X	Two twisted triads #18AWG, 3OOV, ITC, PLTC	Twisted Triads with overall foil shield	Multiple 3 -wire proximity switches	Black, White, Red conductors - Indv circuits numbered		Cables UL listed as ITC and PLTC, 300 V insulation, UL1581 listed for 70,000 BTU vertical tray flame test; 100%	
4TTR#18	X	Four twisted triads #18AWG, 300V, ITC, PLTC	Twisted Triads with overall foil shield	Multiple 3 -wire proximity switches	Black, White, Red conductors - Indv circuits numbered			

8TTR#18	X	Eight twisted triads #18AWG, 300V, ITC, PLTC	Twisted Triads with overall foil shield	Multiple 3 -wire proximity switches	Black, White, Red conductors - Indv circuits numbered		foil polyester/aluminum individual and overall shields with 22AWG Drain wire. Each circuit shall have a minimum of 6-8 twists/ft.	
SA-2TTR#18	X	Two twisted triads #18AWG, 600V, PLTC	Twisted Triads with overall foil shield	Multiple 3 -wire proximity switches	Black, White, Red conductors - Indv circuits numbered W/Blue Jacket		Cables UL listed PLTC, 600 V insulation, UL1581 listed for 70,000 BTU vertical tray flame tes, or IEEE 383, or UL 1202; 100% foil polyester/aluminum individual and overall shields with 22AWG Drain wire. Each circuit shall have a minimum of 6-8 twists/ft.	
SA-4TTR#18	X	Four twisted triads #18AWG, 600V PLTC	Twisted Triads with overall foil shield	Multiple 3 -wire proximity switches	Black, White, Red conductors - Indv circuits numbered W/Blue Jacket			
SA-12TTR#18	X	Twelve twisted triads #18AWG, 600V PLTC	Twisted Triads with overall foil shield	Multiple 3 -wire proximity switches	Black, White, Red conductors - Indv circuits numbered W/Blue Jacket			
SB-2TTR#18	X	Two twisted triads #18AWG, 600V, PLTC	Twisted Triads with overall foil shield	Multiple 3 -wire proximity switches	Black, White, Red conductors - Indv circuits numbered W/Orange Jacket			
SB-4TTR#18	X	Four twisted triads #18AWG, 600V PLTC	Twisted Triads with overall foil shield	Multiple 3 -wire proximity switches	Black, White, Red conductors - Indv circuits numbered W/Orange Jacket			
SB-12TTR#18	X	Twelve twisted triads #18AWG, 600V PLTC	Twisted Triads with overall foil shield	Multiple 3 -wire proximity switches	Black, White, Red conductors - Indv circuits numbered W/Orange Jacket			
SQ-2TTR#18	X	Two twisted triads #18AWG, 600V, PLTC	Twisted Triads with overall foil shield	Multiple 3 -wire proximity switches	Black, White, Red conductors - Indv circuits numbered W/Yellow Jacket			
SQ-4TTR#18	X	Four twisted triads #18AWG, 600V PLTC	Twisted Triads with overall foil shield	Multiple 3 -wire proximity switches	Black, White, Red conductors - Indv circuits numbered W/Yellow Jacket			
SQ-12TTR#18	X	Twelve twisted triads #18AWG, 600V PLTC	Twisted Triads with overall foil shield	Multiple 3 -wire proximity switches	Black, White, Red conductors - Indv circuits numbered W/Yellow Jacket			
		Power and Control cables for Racks and Mech. Pkgs						
HT-3/C#12	X	Three conductor #12 AWG 600V, Temperature rating 302F/150C DEG	Individual conductors with PVC jacket	High Temperature	Black conductors			
HT-5TPR#24	X	Five twisted pr #24AWG, 300V, 480F/250C DEG	Individual conductors with Teflon jacket	High Temperature	Black, White conductors			
HT-12TPR#18	X	Twelve twisted pr #18AWG, 300V, 220F/105C DEG	Individual conductors with Okoseal (PVC) jacket	High Temperature	Black, White conductors			
3/C#14	X	Three conductor #14 AWG 600V		120Vac	Black, Red, Blue			
5/C#14	X	Five Conductor #14 AWG, 600V		Mechanical Handling 120Vac control Circuits.				
7/C#14	X	Seven Conductor #14 AWG, 600V		Mechanical Handling 120Vac control Circuits.				
12/C#14	X	Twelve Conductor #14 AWG, 600V		Mechanical Handling 120Vac control Circuits.				
SA-3/C#14	X	ITS-Three conductor #14 AWG 600V		ITS Control Circuits	W/Blue Jacket			
SA-7/C#14	X	ITS -Seven Conductor #14 AWG, 600V		ITS Control Circuits	W/Blue Jacket			
SB-3/C#14	X	ITS-Three conductor #14 AWG 600V		ITS Control Circuits	W/Orange Jacket			
SB-7/C#14	X	ITS -Seven Conductor #14 AWG, 600V		ITS Control Circuits	W/Orange Jacket			
SQ-3/C#14	X	ITS-Three conductor #14 AWG 600V		ITS Control Circuits	W/Yellow Jacket			

SQ-7/C#14	X	ITS -Seven Conductor #14 AWG, 600V		ITS Control Circuits	W/Yellow Jacket			
		Specialty Cables						
R980FC	X	12 core camera cable (12 conductors, 3 drains)	R980CAB008/ A4 spec	CCTV camera controls for R980 and C980 series. Used only on mechanical handling machines for high flexure applications.	1-Brn, 2-Rd,3- Org, 4-Yel, 5-Grn, 6-Blu, 7-Vt, 8-Gy, 9-Wht, 10-Blk, 11-Brn, 12 -Rd, bare drains	IST Reese	1- TSP #18, 1-TP#18, 1- TS-Quad#18, 4#18 cond. Polyester tape and screen shielding, with LSF halogen free overall sheath. Individual insulation XLPE.	
R980TC	X	12 core camera cable (12 conductors, 3 drains)	R980CAB008/ A4 spec	CCTV camera controls for R080 and C980 series. Tray Rated cable	1-Brn, 2-Rd,3- Org, 4-Yel, 5-Grn, 6-Blu, 7-Vt, 8-Gy, 9-Wht, 10-Blk, 11-Brn, 12 -Rd, bare drains	IST Reese	1- TSP #18, 1-TP#18, 1- TS-Quad#18, 4#18 cond. Polyester tape and screen shielding, with LSF halogen free overall sheath. Individual insulation XLPE.	
Type 102.00.042		29 core composite camera control cable	Type 102.00.042	HLW Melter plenum and seal head cameras	see IST specification 102.00.042/A4	IST Reese	Manufacturer specific	
		Extension Cables for themocouples						
1EX#16	X	Type EX TC Wire, single twisted shielded pair w/OAS	Type EX Chromel-Constantan	Type E Thermocouple	+Purple, -Red	Conax		
1SX#16	X	Type SX TC Wire , single twisted shielded pair w/OAS	Type SX Copper/PCLW	Type S Thermocouple	+Black, -Red	Conax		
2SX#20	X	Type SX TC Wire , 2 twisted shielded pairs w/OAS	Type SX Copper/PCLW	Type S Thermocouple	+Black, -Red	Conax		
1NX#16	X	Type NX TC Wire , single twisted shielded pair w/OAS	Type NX Nicrosil-NiSil	Melter Jumper	+ Orange, - Red			
2NX#20	X	Type NX TC Wire/ 2 twisted shielded pairs w/ OAS	Type NX Nicrosil-NiSil	Melter Jumper	+ Orange, - Red			
3NX#20	X	Type NX TC Wire/ 3 twisted shielded pairs w/ OAS	Type NX Nicrosil-NiSil	Melter Jumper	+ Orange, - Red			
4NX#20	X	Type NX TC Wire/ 4 twisted shielded pairs w/ OAS	Type NX Nicrosil-NiSil	Melter Jumper	+ Orange, - Red			
5NX#20	X	Type NX TC Wire/ 5 twisted shielded pairs w/ OAS	Type NX Nicrosil-NiSil	Type N thermocouple, HLW Melter Jumpers	+ Orange, - Red			
24NX#20	X	Type NX TC Wire/ 24 twisted shielded pairs w/OAS.	Type NX Nicrosil-NiSil	Type N thermocouple	+Orange, -Red			
		Data Communication Cables						
1TSPR#18FF - INTLK	X	**Not used by Setroute - supports Interlink cables procured for bulges- Single Twisted Shielded pair, Foundation Fieldbus Spur**	**Foundation Fieldbus Type A Spur cable - early valve bulge procurement**	**Ordered to length with connectors**	**+ Brown, -Blue, Jacket : Yellow**	**Interlink 490**		Blue (-) Pin 1; Orange(+) Pin 2; Shield Pin 3, Not used Pin 4
1TSPR#18FF	X	Single Twisted Shielded pair, Foundation Fieldbus	Foundation Fieldbus Type A Armored or Type ER crush resistant cable	Procured as C&I bulk cordsets to preset lengths with Pepperl-Fuchs Mini Connector	+Orange, -Blue, Jacket: Orange	Pepperl Fuchs FieldConnex Mini Cordsets, Belden 3076F		Blue (-) Pin 1; Orange(+) Pin 2 Shield Pin 3, Not used Pin 4
1TSPR#18FFT	X	Single Twisted Shielded pair, Foundation Fieldbus	Foundation Fieldbus Type A Armored or Type ER crush resistant Trunk cable	Home Runs from spur blocks to controllers, Bulk cable no connectors	+Orange, -Blue, Jacket: Orange	Belden 3076F, Dekoron FB52-8831A-264		Blue (-) Pin 1; Orange(+) Pin 2 Shield Pin 3, Not used Pin 4

1TSPR#18FFA-INTLK	**X**	**Not used by setroute- supports Interlonk cables procured on bulges. Single Twisted Shielded pair, Foundation Fieldbus Armored**	**Foundation Fieldbus Type A Armored Spur cable**	**ordered to length with connectors**	**+Brown, -Blue, Jacket: Yellow**	**Interlink 492A**		Blue (-) Pin 1; Orange(+) Pin 2 Shield Pin 3, Not used Pin 4
1TSPR#18FFA	X	Single Twisted Shielded pair, Foundation Fieldbus Armored	Foundation Fieldbus Type A Armored or type ER crush resistant cable	Procured as C&I bulk cordsets to preset lengths with Pepperl-Fuchs Mini Connector	+Orange, -Blue, Jacket: Orange	Pepperl Fuchs FieldConnex Mini Cordsets		Blue (-) Pin 1; Orange(+) Pin 2 Shield Pin 3, Not used Pin 4
1TSPR#22PB	X	Single Twisted Shielded pair, Profibus-DP	Profibus-DP Type ER crush resistant	Procured in bulk reels by Electrical	+ Red, -Green, Jacket: Purple	Belden 3079A	22 AWG Solid Bare Copper Conductors, Beldfoil (100% Coverage) + TC Braid Shield (65% Coverage), Foamed High-density Polyethylene Insulation, PVC Jacket, 300V 75°C. Compliant with EIA RS485 and EN50170-2-2:1997 standards. Flame retardant Polyethylene, aluminum polyester shield, UL listed as ITC, PLTC,CL2, CEC,PCC,FT4. Flame resistance UL:1581,Vertical tray rated.	
4UTP#24	X	Four unshielded twisted pair Ethernet cable	CAT 6 Type ER crush resistant ANSI/EIA -568 UL Listed NEC Type CMP Paired, 4 pairs, 24 AWG, stranded (7x32) TC - Tinned Copper conductors, PE - Polyethylene (Polyolefin) insulation, adjoined singles, Unshielded, PVC - flexible Polyvinyl Chloride jacket. Jacket sequentially marked at two foot intervals. Applicable Specifications: TIA/EIA 568-B.2 Category 6 Patch, TIA/EIA 568A, Category 6 Patch, UL verified to Category 6 Patch, UL Verified to Category 6 Solid, ISO/IEC 11801, Category 6 Patch, ICEA 661, Cat. 6-100 Patch, NEMA WC-63.1 Category 6 Patch. Flame Test: UL 1581 Vertical Tray, C(UL) Type CM, CSA FT1. 4 Pair UTP (Unshielded Twisted Pair) Cable. Local Area Network. Plenum. Bonded pairs. See DataTwist 350 Patch Cable color code chart. RJ-45 compatible.	High Speed Ethernet				
RS485	X	Serial Communication cable	TIA/EIA-485			Belden 82842		
RG58	X	50 Ohm coaxial cable, 300V	RG58 Type ER crush resistant					
RG6	X	75 Ohm coaxial cable, 300V	RG6/U Type ER crush resistant	CCTV		West Penn Wire model 825	Miniature type coax, UL listed type CM, CL2, pass UL1581 Vertical Tray Flame Test	
SA-RG58	X	50 Ohm coaxial cable, 300V	RG58 Type ER crush resistant	PPJ System -peer tp peer communications.				
SB-RG58	X	50 Ohm coaxial cable, 300V	RG58 Type ER crush resistant	PPJ System -peer tp peer communications.				
SQ-RG58	X	50 Ohm coaxial cable, 300V	RG58 Type ER crush resistant	PPJ System -peer tp peer communications.				
		Fiber Optic Communication Cable						
2FSM	X	Two Fiber Single-mode Fiber cable	8.3/125mm Single-mode, OFNP	Patch cables	Fiber color-coded buffer tubes per ANSI/EIA-568			

2FMM	X	Two Fiber Multimode cable	50/125mm, Multimode, OFNP	Patch cables	Fiber color-coded buffer tubes per ANSI/EIA-568		Fiber optic cables shall be non-conductive, listed for vertical tray use, and have flame retardant outer insulation. UL 910 listed for OFNP type cable	
2FMM (1M)	X	Two Fiber Multimode cable 1M Patch	50/125mm, Multimode, OFNR	Patch cables	Fiber color-coded buffer tubes per ANSI/EIA-569	Corning 979702SJ180001M		
2FMM (3M)	X	Two Fiber Multimode cable 3M Patch	50/125mm, Multimode, OFNR	Patch cables	Fiber color-coded buffer tubes per ANSI/EIA-570	Corning 979702SJ180003M		
4FMM	X	Four Fiber Multimode cable	50/125mm, Multimode, OFNP	Intra-Bldg routes	Fiber color-coded buffer tubes per ANSI/EIA-568			
6FMM	X	Six Fiber Multimode Fiber cable	50/125mm, Multimode, OFNP; inside/outside rated	Intra- or Inter-Bldg routes	Fiber color-coded buffer tubes per ANSI/EIA-568			
12FMM	X	Twelve Fiber Multimode cable	50/125mm, Multimode, OFNP	Intra- or Inter-Bldg routes	Fiber color-coded buffer tubes per ANSI/EIA-568			
24FMM	X	Twenty Four Fiber Multimode cable	50/125mm, Multimode, OFNP	Intra- or Inter-Bldg routes	Fiber color-coded buffer tubes per ANSI/EIA-568			
24FMM24SM	X	Twenty-Four Fiber Multimode, Twenty-Four Fiber Single-mode cable	50/125mm Multimode & 8.3/125mm Single-mode OFN	Inter- Bldg Routes	Fiber color-coded buffer tubes per ANSI/EIA-568			
48FMM	X	Forty Eight Fiber Multimode cable	50/125mm, Multimode, OFNP	Intra-Bldg routes	Fiber color-coded buffer tubes per ANSI/EIA-568			
96FMM	X	Ninety-Six Fiber Multi-mode	50/125mm, Multimode, OFNP	Intra-Bldg routes	Fiber color-coded buffer tubes per ANSI/EIA-569			
4FMMX	X	Four Fiber Multimode cable	62.5/125mm, Multimode, OFNP	Intra-Bldg routes	Fiber color-coded buffer tubes per ANSI/EIA-568			
12FMMX	X	Twelve Fiber Multimode cable	62.5/125mm, Multimode, OFNP	Intra- or Inter-Bldg routes	Fiber color-coded buffer tubes per ANSI/EIA-568			
		Fiber Optic Communication Cable -safety systems						
SA-12FMM	X	Twelve Fiber Multimode cable	62.5/125mm, Multimode, Multimode, Riser, rad hardened	PPJ system component interconnection	Fiber color-coded buffer tubes per ANSI/EIA-568 W/Blue Jacket	Chromatic Technologies/ distributed by CableLan Products, Inc.	Cables listed for Riser use, UL1666, meet UL 383 flame tests, qualified to nuclear quality assurance requirements and specifications of the 10CFR50, appendix B.	
SB-12FMM	X	Twelve Fiber Multimode cable	62.5/125mm, Multimode, Multimode, Riser, rad hardened	PPJ system component interconnection	Fiber color-coded buffer tubes per ANSI/EIA-568 W/Orange Jacket	Chromatic Technologies/ distributed by CableLan Products, Inc.	Cables listed for Riser use, UL1666, meet UL 383 flame tests, qualified to nuclear quality assurance requirements and specifications of the 10CFR50, appendix B.	
SQ-12FMM	X	Twelve Fiber Multimode cable	62.5/125mm, Multimode, Multimode, Riser, rad hardened	PPJ system component interconnection	Fiber color-coded buffer tubes per ANSI/EIA-568 W/Yellow Jacket	Chromatic Technologies/ distributed by CableLan Products, Inc.	Cables listed for Riser use, UL1666, meet UL 383 flame tests, qualified to nuclear quality assurance requirements and specifications of the 10CFR50, appendix B.	
-	-	-	-	-	-			
		Vendor Cables						
V-AE01		Analysis Element cable for PTF (BSA)						
V-AE02	X	Analysis Element cable for LAW (pH analyzer)						
V-AE03	X	B86 Analysis Element						
V-AE04	X	B86 Analysis Element						
V-CE01	X	ABB CE pigtail to CT	4 conductor plus shield		1-Grn, 2-Blk, 3-Blu, 4-Yel, 5-DkGrn			

V-CE02	X	ABB CE pigtail to CT	6 conductor plus shield		1-Grn, 2-Red, 3-Wht, 4-Blk, 5-Blu, 6-Yel, 7-DkGrn			
V-FE01	X	ABB Magmeter						
V-FE02								
V-ME01		Moisture Element cable for PTF (BSA)						
V-RE01		Radiation Element cable for PTF (ITS CXP)						
V-RE02		Non-ITS Gamma Monitor procured by C&I						
V-RE03		ITS Glove Box/Posting Port Gamma Monitor supplied with vendor pkg						
V-RE04		ITS Gamma Monitor procured by C&I						
SQ-V-RE04		ITS Gamma Monitor procured by C&I						
V-R980	X	Pigtail -12 core camera cable (12 conductors, 3 drains)	R980CAB008/ A4 spec	CCTV camera controls for R980 and C980 series. For preinstalled pigtail by vendor.	1-Brn, 2-Rd,3- Org, 4-Yel, 5-Grn, 6-Blu, 7-Vt, 8-Gy, 9-Wht, 10-Blk, 11-Brn, 12 -Rd, bare drains	IST Reese	1- TSP #18, 1-TP#18, 1- TS-Quad#18, 4#18 cond. Polyester tape and screen shielding, with LSF halogen free overall sheath. Individual insulation XLPE.	Fischer Connector Size 106/ SE106Z015/15.2 w / no connector on other end
V-RG6	X	Camera cable						
V-RS485	X	Camera cable						
V-TE01	X	Thermister Cable						
V-TE02		Battery Temperature Sensor	Gutor JB-500 Part#11026		1-BLU, 2-BRN		1TPR#18, PVC outer shieth TM2	
SA-V-TE03		Battery Temperature Sensor			1-BLU, 2-BRN			
SB-V-TE03		Battery Temperature Sensor			1-BLU, 2-BRN			
V-WE01		Weight Element cable						
V-XT01		Melter camera cable						
		X -cable in Setroute library						
		A- setroute has armored version of cable						

Appendix A: NRTL CERTIFICATION

NRTL Certificate of Conformance

We, _____, herby certify that the electrical
SELLER
components included in the table below are listed or labeled by and OSHA recognized NRTL, under 29 CFR 1910-Subpart S. These components are found, by NRTL, to conform to all applicable OSHA recognized test standards and are acceptable for the application, environment and conform to the requirements of NEC Article 110.3.

We further certify that all UL 508A labeled enclosures included below have not been modified by non-UL 508A qualified workers and that all wiring conforms to the NEC.

_____ _____
Author / Engineer Date

_____ _____
Quality Assurance Representative Date

_____ _____
Project Manager Date

Tag (if Applicable)	Manufacturer	Model

Appendix B Template for Instrument Datasheet for Thermocouples.

GENERAL	1	Facility / System	Tag number		
	2	Service			
	3	Line no/Jumper no/Line description	P&ID/V&ID/MHD		
	4	Hazardous area class	Contamination & Radiation class		
	5	Safety class (active)	SSC Characteristic		
	6	Quality level	Quality level (boundary)		
	7	Seismic category	Seismic (boundary)	Design life	
	8	Max instantaneous dose rate	Time integrated dose		
	9	Supply loss failure mode	Signal loss failure mode		
	10				
PIPE LINE	11	Line size	Line schedule		
	12	Pipe material class	Pipe material	Pipe insulation	
PROCESS CONDITIONS	13	Fluid name	Fluid state		
	14	Corrosive / Erosive	Toxic	Vibration	
	15	**PROCESS DESIGN CONDITIONS**	**Units**	**Minimum**	**Units** / **Maximum**
	16	Design pressure			
	17	Design temperature			—
	18	**MATERIAL FLOW CONDITIONS**	**Units**		**@ Normal flow**
	19	Pressure			
	20	Temperature			
	21	Velocity			
	22				

SHEATH AND FITTING	23	Housing type		CONNECTION HEAD	55	Housing type
	24	Pad/Collar type			56	Cover style
	25	Fitting conn size / Style			57	Element conn nom size / Style
	26	Mounting fitting type			58	Signal conn nominal size / Style
	27	Sheath outside diameter			59	Enclosure type number
	28	Spring loading			60	Grounding terminal location
	29	Sheath material			61	Enclosure material
	30	Fitting material			62	Terminal block material
	31				63	Terminal material
SENSING ELEMENT	32	Sensor type			64	
	33	Sensor quantity		THERMOWELL	65	Construction type
	34	Wire nominal size			66	Shank style
	35	Tolerenoe class			67	End conn size / Rating
	36	Thermocouple type			68	End conn type / Style
	37	Measuring junction			69	Internal conn nominal size
	38	Thermocouple wire matl			70	Bore diameter
	39	Insulator material			71	Outside diameter at supp
	40				72	Outside diameter at tip
LEAD WIRE AND HEAD EXTENSION	41	Extension type			73	Insertion length "U"
	42	Ext wire nom size			74	Lagging ext length "T"
	43	Extension/Lead length			75	Thermowell material
	44	Nipple-union nom size			76	Sheath material - thickness
	45	Nipple pipe scheal No			77	
	46	Termination style		PERFORMANCE	78	Maximum fluid velocity / At temp
	47	Connecting wire length			79	Minimum insertion length
	48	Shield - ground wire			80	
	49	Nipple material		PURCHASE	81	Purchase order number
	50	Union/Coupling material				
	51	Coating-armor material				
	52	Extension wire material				
	53	Ext wire insulation material				
	54					

Notes: Seller to complete or correct ALL instrument properties of proposed items.

82	—	Measurement/Test	Input LRV	Input URV	Units	Action	Output LRV	Output URV	Units
83	—	Temp output signal							
84									

85	Component type	Manufacturer	Model number
86	Temperature element		
87	Thermowell		

No	Org	Chkd	Apvd	NSE	Date	Description

Project name: WTP
Project number: 24590
Site: Hanford
INSTRUMENT DATA SHEET

Sheet of

Form: DS No: Rev:

Appendix C

[PR1]

Non-Modifiable Configurable Firmware (NMCF) Supplier Data Request

Page 1 of 2

Submittal Document No.: _____

Supplier Name: Gaumer Process

FOR WTP USE

Procurement Information:

Requisition No.: 24590-QL-MRA-MEE0-00004

Requisition Name: DVP HEPA Filter Preheater

RE/STR: _____

PPS: _____

Referenced Component Information:

Component No.(s): _____

Component Description(s): _____

Subcomponent No.(s): _____

Subcomponent Description(s): _____

FOR SUPPLIER USE

NMCF Information:

Firmware Manufacturer: _____

Firmware Product ID: _____

Firmware Name: _____

Firmware Version/Revision: _____

NMCF Configuration Items:

Supplier to indicate which item(s) accompanies the NMCF upon delivery. Provide information for each piece of equipment that utilizes NMCF, use multiple pages if needed.

Cables ☐ Yes ☐ No

Name/Type/ID: _____

Description: _____

Special Hardware ☐ Yes ☐ No

Name/Type/ID: _____

Description: _____

Installation and Maintenance/Operation Manuals ☐ Yes ☐ No

Name/Type/ID: _____ Installation Manual: _____

Description: _____

Name/Type/ID: _____ Operation Manual: _____

Description: _____

24590-ENG-F00098 Rev 1 (Revised 11/10/2009) Ref: 24590-WTP-3DP-G04T-00921

Appendix C

Non-Modifiable Configurable Firmware (NMCF) Supplier Data Request

Submittal Document No.: _____

Support Software ☐ Yes ☐ No

Name/Type/ID: _____

Description: _____

Configuration Files and Parameter Settings ☐ Yes ☐ No

Name/Type/File Name (ID): _____

Associated Panel/Skid No.: _____

Associated Subcomponent (Child) No.: _____

Supplier Representative: _____ _____ _____

Print/Type Name *Signature* *Date*

ISSUED BY
RPP-WTP PDC

RIVER PROTECTION PROJECT – WASTE TREATMENT PLANT

ENGINEERING SPECIFICATION

FOR

DVP Vessel Vent Centrifugal Exhauster

Content applicable to ALARA?	☒ Yes ☐ No	**Quality Level**
ADR No. 24590-BOF-ADR-M-16-0004	**Rev** 1	CM
Specification changes retroactive?	☒ Yes ☐ No ☐ N/A (alpha revision or revision 0)	DOE Contract No. DE-AC27-01RV14136

Retroactive applicability: All changes in this revision are to be incorporated by the SELLER into equipment design and fabrication for all items on the purchase order.

NOTE: Contents of this document are Dangerous Waste Permit affecting.

REV	DATE	BY	CHECK	AUTHORIZATION	APPROVER *
2	5-23-18	Originator By: Thang E. Thawn - tethawn Org Name: Bechtel Placed: May 17, 2018 Thang Thawn	Checked By: Jung Shin - jwshin1 Org Name: Bechtel National, Inc. Placed: May 17, 2018 Jung Shin	N/A	Approved By: Youssef Mohammad-Zadeh - ymohamma Org Name: Bechtel Placed: May 23, 2018 Y. Mohammad-Zadeh Sarah Barker
1	04-12-2017	James Babcock Tory Fogle (EDR Comments Only)	Erica Poberezny	N/A	Y. Mohammad-Zadeh Julian Leam
0	06-20-2016	Hau Pau (EDR Comments Only) David Holms	Gerard Garcia	N/A	Y. Mohammad-Zadeh Julian Leam

Reviewed No Comments By: Jerid Mauss - jlmauss Org Name: Bechtel Placed: May 17, 2018

SPECIFICATION No.	Rev
24590-BOF-3PS-MACS-T0001	2

*The designated procedure subject matter expert (SME) for 24590-WTP-3DP-G04B-00049, *Engineering Specifications*, will concur with the retroactive determination and retroactive applicability details for all Specification Change Notices. Designated procedure SME Concurrence is documented by the initials of the SME in or by the Approval box. See CCN 263771 for details.

Revision History

Revision	Reason for Revision	Q Specification Revision Only Margin Reduced?		CM Only
		YES	NO	N/A
0	Innitial Issue	N/A	N/A	N/A
1	Issued for Purchase. Conformed to SELLER's offering. Deleted Exhibit 1 Electrical Requirements for Packaged Equipment. Deleted Exhibit 5 Instrumentation for Packaged Systems. Deleted Exhibit 6 Low Voltage Adjustable Speed Drive (Non-Safety). Added notice for AEA 1954 on byproduct materials to Page iii. Section 1.2.3 deleted the discharge silencer. Added Section 2.4 Laws and Regulations. Deleted the Adjustable Speed Drive (ASD) from the Seller's Scope and changed other affected sections accordingly. Adjusted and removed Code years from some Codes and Standards. Deleted Calculations Section and adjusted Sections 3.3 and 10.3.2 to conform Seller's Design Life report and Lifting Lug load analysis. Added new items from specification 24590-WTP-3PS-FB01-T0001 to Exhibit 3. These changes and other minor changes from the Seller's conformance review process for clarification have been identified and are marked in the right-hand margin of the document. There are no applicable EIEs.	☐	☒	☐
2	Issued for incorporation of Design Change Documents. Incorporated the following SCNs and SDDRs: - SCN: 24590-BOF-3PN-M40T-00001. - SCN: 24590-BOF-3PN-MACS-00001. - SDDR: 24590-WTP-SDDR-MS-17-00096 (modified Sections 1.2.3, 3.5.1.1, 3.5.1.7, and 5.2.3). - SDDR: 24590-WTP-SDDR-MS-17-00099 (modified Sections 2.2.4, 5.2.1 thru 5.2.4 and deleted Sections 2.2.5, 2.2.8 thru 2.2.12). - Minor editorial changes. - Added Section 11 to include all Design Changes Incorporation by Reference SDDRs. There are no EIEs against this document.	☐	☐	☒
		☐	☐	☐

Notice

Please note that source, special nuclear, and byproduct materials, as defined in the Atomic Energy Act of 1954 (AEA), are regulated at the US Department of Energy (DOE) facilities exclusively by DOE acting pursuant to its AEA authority. DOE asserts, that pursuant to the AEA, it has sole and exclusive responsibility and authority to regulate source, special nuclear, and byproduct materials at DOE-owned nuclear facilities. Information contained herein on radionuclides is provided for process description purposes only.

Contents

1 Scope 1
1.1 Project Description and Location 1
1.2 Equipment, Material, and Services Required 1
1.3 Work by Others 2
1.4 Acronyms, Abbreviations, and Definitions 2
1.5 Safety/Quality Classifications 3
2 Applicable Documents 3
2.1 General 4
2.2 Codes and Standards 4
2.3 Reference Documents/Drawings …… 5
2.4 Laws and Regulations 5
3 Design Requirements 6
3.1 General 6
3.2 Basic Function 6
3.3 Performance 6
3.4 Design Conditions 6
3.5 Mechanical Requirements 7
3.6 Loadings 7
3.7 Electrical Requirements 8
3.8 Instrumentation and Control Requirements 9
3.9 Accessibility and Maintenance 9
4 Materials 9
4.1 Materials and Equipment 9
4.2 Prohibited Materials 10
5 Fabrication 10
5.1 General 11
5.2 Welding and Non-Destructive Examination (NDE) Requirements 12
6 Tests and Inspections 14
6.1 General 14
6.2 Personnel Certifications 15
6.3 Non-Destructive Examinations 15
6.4 Shop Tests 15
6.5 Site Tests 16

7 Preparation for Shipment 16
7.1 General Requirements 16
7.2 Cleanliness 16
7.3 Tagging 17
7.4 Packaging and Shipping Instructions 17
8 Quality Assurance 17
8.1 General Requirements 17
8.2 Quality Related Components 17
9 Configuration Management 17
9.1 General 17
10 Documentation and Submittals 18
10.1 General 18
10.2 Schedules 18
10.3 Submittals 18
11 Design Changes Incorporated By Reference 26

Attachments

Attachment A - Deleted

Exhibits

Exhibit 1 Deleted
Exhibit 2 Low Voltage Induction Motors ..... Exhibit 2, Page 1
Exhibit 3 Structural Design Loads for Seismic III & IV Equipment and Tanks ..... Exhibit 3, Page 1
Exhibit 4 Positive Material Identification (PMI) for Shop Fabrication ..... Exhibit 4, Page 1
Exhibit 5 Deleted
Exhibit 6 Deleted

1 Scope

1.1 Project Description and Location

The Office of River Protection (ORP) and its contractors manage 177 underground radioactive waste storage tanks at the Hanford Site in Washington. These tanks contain approximately 56 million US gallons of radioactive waste. Bechtel National, Inc. (BNI) has entered into contract with the US Department of Energy to design, construct, and commission the Hanford Tank Waste Treatment and Immobilization Plant (WTP) to process and vitrify this waste into a stable form that is suitable for permanent storage or disposal. The WTP will be constructed in the 200 East Area of the Hanford Site, near Richland, Washington. The main facilities within the WTP complex will be the Pretreatment facility (PTF), Low-Activity Waste facility (LAW), High-Level Waste facility (HLW), Balance of Facilities (BOF), Analytical Laboratory (Lab), and the Effluent Management Facility (EMF).

1.2 Equipment, Material, and Services Required

This specification establishes the minimum requirements for the performance, design, analysis, materials, fabrication, testing, inspection, quality assurance, qualification, documentation, and preparation for the shipment of the Exhausters downstream of the high efficiency particulate air (HEPA) filters serving the Vessel Vent Off-gas System in the Effluent Management Facility.

The scope of work for the Seller includes all work defined in this specification, and its attachments. The scope of work for the Seller shall include, but is not limited to, the following:

1.2.1 Provide the design, materials, fabrication, testing, qualification, inspection, preparation for shipment, documentation, and submittals of Exhausters, in accordance with this specification and the Mechanical Data Sheets (MDS), purchasing documents, and referenced codes, standards, and documents.

1.2.2 Deleted

1.2.3 Each Exhauster shall include, but is not limited to, the following:

- A 460 volt/3-phase/60 Hertz premium efficient motor capable of being controlled by an adjustable speed drive
- Motor coupling
- A direct drive fan or blower with a sealed shaft and safety guard
- Exhauster shaft speed sensor/transmitter
- 316/316L (with maximum carbon content of 0.030%) Stainless Steel Housing and Mounting Frame including inlet and outlet sides of transition pieces.
- Vibration isolators
- Fused disconnect switch
- NEMA 4X, Type 304 Stainless Steel Enclosure
- Flexible metal hose connection

1.2.4 Special tools required for installation maintenance, if any.

1.2.5 Each exhauster/motor assembly shall come fully assembled, wired and skid mounted requiring only connection to the Buyer's electrical power, control systems and piping.

1.2.6 Provide and submit procedures, reports, manuals, and all documentation per this specification.

1.3 Work by Others

Any item not specifically listed as being supplied by the Buyer shall be provided by the Seller. The Buyer shall supply the following:

1.3.1 Handling, storage, and installation of the exhausters at the Buyer's job site.

1.3.2 Installation labor at WTP.

1.3.3 Foundation (concrete floor with embed plates).

1.3.4 Piping external to the inlet and outlet connections.

1.3.5 Electrical power supply to the exhauster motors.

1.3.6 Wiring external to the exhauster motors.

1.3.7 Field testing and inspection.

1.3.8 Transportation Services excluding insurance requirement.

1.3.9 Adjustable Speed Drives (ASD).

1.4 Acronyms, Abbreviations, and Definitions

1.4.1 Acronyms and Abbreviations

AEA	Atomic Energy Act
ABMA	American Bearing Manufacturers Association
AMCA	Air Movement and Control Association
AHJ	Authority Having Jurisdiction
ASD	Adjustable Speed Drive
AWG	American Wire Gauge
ANSI	American National Standards Institute
ASNT	American Society of Nondestructive Testing
ASME	American Society of Mechanical Engineers
ASTM	American Society of Testing and Materials
AWS	American Welding Society
CFR	Code of Federal Regulations
DOE	US Department of Energy
EMF	Effluent Management Facility
HEPA	High Efficiency Particulate Air
ISO	International Standards Organization
IEEE	Institute of Electrical and Electronics Engineers
MTR	Material Test Report
MDS	Mechanical Data Sheet
MR	Material Requisition
NEC	National Electric Code
NEMA	National Electrical Manufacturers Association

NFPA	National Fire Protection Association
NRTL	Nationally Recognized Testing Laboratory
OEM	Original Equipment Manufacturer
OSHA	Occupational Safety & Health Act
PMI	Positive Material Identification
PQR	Procedure Qualification Records
QA	Quality Assurance
QAP	Quality Assurance Program
SC	Seismic Category
SC	Safety Class
SDDR	Supplier Deviation Disposition Request
SS	Safety Significant
SSC	Structure, System, or Component
UL	Underwriters Laboratories, Inc.
WAC	Washington State Administrative Code
WTP	Hanford Tank Waste Treatment and Immobilization Plant

1.4.2 Definitions

Buyer: Bechtel National Inc.

Seller: This term includes manufacturer, assembler, fabricator, supplier, vendor, contractor, sub-contractor, sub-supplier or equal who provides equipment, systems, components, services, or other products for delivery to the Buyer.

Exhausters: Refers to the Exhausters that move radioactive air through the system.

MR: Refers to the material requisition for the Exhausters.

MDS: Refers to the mechanical data sheet for the Exhausters.

C3: C3 areas are the process areas where the potential for direct contact with radioactive material, contaminated systems and components, or both, exists.

R3: Radiation classification for areas with a target dose equivalent rate of less than 2.5 mrem/hr. Entry only to carry out prescribed tasks accordance with normal procedures and a Radiation Work Permit. Thermoluminescent Dosimeter and Radiation Worker training required for entry into Radiation Areas.

1.5 Safety/Quality Classifications

1.5.1 The quality level identifies the quality requirements to be applied to the equipment. Quality requirements are specifically defined on the associated mechanical data sheets (MDS) and supplier quality assurance program requirements data sheets. Refer to the MDSs for the quality level designations of the Exhausters and motors.

1.5.2 The Exhausters shall be designed as Seismic Category IV (SC-IV).

2 Applicable Documents

2.1 General

2.1.1 Work shall be done in accordance with the referenced codes, standards, and documents listed below, which are an integral part of this specification.

2.1.2 When specific chapters, sections, parts or paragraphs are listed following a code, industry standard or referenced document, only those chapters, sections, parts or paragraphs of the document are applicable and shall be applied.

2.1.3 For the codes and standards listed in Section 2.2, the specific edition year identified shall be followed. For the codes and standards that are incorporated by reference (daughter codes and standards), the referenced daughter edition or current edition shall be followed. If an edition is not identified, the latest issue, including addenda, at the time of the award shall apply. The edition year listed in Section 2.2 shall apply to subsequent references to the codes and standards within the specification and shall govern in case of conflict with edition years specified in the reference documents listed in Section 2.3. If more than one code, standard or reference document covers the same topic, the requirements for all must be met with the most stringent governing.

2.1.4 Deleted

2.2 Codes and Standards

2.2.1 Deleted

2.2.2 ABMA 1990, *Load Ratings and Fatigue Life for Ball Bearings.*

2.2.3 ASME B31.3-1996, *Process Piping.*

2.2.4 ASME AG-1-1997 with ASME AG-1a-2000 Addenda, *Code on Nuclear Air and Gas Treatment (ASME AG-1-2015 for welding, NDE, welding procedure specification and procedure qualification records).*

2.2.5 Deleted.

2.2.6 Deleted

2.2.7 ASNT-SNT-TC-1A, *American Society of Non-Destructive Testing Recommended Practice No. SNT-TC-1A Personnel Qualification and Certification in Nondestructive Testing.*

2.2.8 Deleted.

2.2.9 Deleted.

2.2.10 Deleted.

2.2.11 Deleted.

2.2.12 Deleted.

2.2.13 IEEE 1050-1996, *IEEE Guide for Instrumentation and Control Equipment Grounding in Generating Stations.*

2.2.14 Deleted

2.2.15 ISO 1940-1, *Mechanical Vibration Balance Requirements For Rotors In A Constant (Rigid) State Part 1: Specification and Verification Of Balance Tolerances.*

2.2.16 NEMA 250, *Enclosures for Electrical Equipment (1000 Volts Maximum).*

2.2.17 NEMA MG1, *Motors and Generators.*

2.2.18 NFPA 70-1999, *National Electric Code*.

2.2.19 Deleted

2.2.20 Deleted

2.2.21 AMCA 99, *Standards Handbook.*

2.2.22 AMCA 210, *Laboratory Methods of Testing Fans for Certified Aerodynamic Performance Rating.*

2.3 Reference Documents/Drawings

2.3.1 24590-WTP-3PS-G000-T0003, *Engineering Specification for Packaging, Handling, and Storage Requirements.*

2.3.2 Deleted

2.3.3 Deleted

2.3.4 24590-WTP-LIST-ESH-16-0001, *Restricted Materials List.*

2.3.5 Deleted

2.4 Laws and Regulations

2.4.1 10 CFR 835, *Occupational Radiation Protection Program*.

2.4.2 10 CFR 851, *Worker Safety and Health Program.*

2.4.3 29 CFR 1910, *Occupational Safety and Health Standards.*

2.4.4 OSHA 29 CFR 1910, *Subpart O, Machinery and Machine Guarding.*

2.4.5 OSHA 29 CFR 1910, *Subpart S, Electrical.*

2.4.6 WAC 173-303, *Dangerous Waste Regulations.*

3 Design Requirements

3.1 General

3.1.1 Exhausters, electric motors and accessories shall meet requirements specified herein and in the data sheets included in the Material Requisition (MR). Each off-gas skid-mounted exhauster/motor assembly shall include all components and accessories fully assembled and wired requiring only connection to the Buyer's control system, and 480 V power from the remotely located ASDs to the motors.

3.1.2 Deleted

3.1.3 Deleted

3.2 Basic Function

3.2.1 The Exhausters will provide the motive force required to transport air and gaseous effluent to the atmosphere.

3.2.2 Exhausters shall remain stable throughout its entire range from free flow to shut off conditions.

3.2.3 Deleted.

3.3 Performance

3.3.1 Design basis performance and capacity data are listed on the Exhauster Data Sheet.

3.3.2 Exhauster performance ratings are to be based on testing in accordance with AMCA 99 and 210. Exhausters shall be capable of performing at conditions shown on the Exhauster Data Sheet.

3.3.3 The Exhausters and appurtenances will be used in a plant that has the design life of 40 years. The design objective for these exhausters shall be based on a useful life expectancy of 40 years with periodic maintenance as recommended by the Seller.

3.3.4 The Exhausters assembly design life shall consider the effects of radiological and thermal exposure conditions as specified on the mechanical data sheets.

3.4 Design Conditions

3.4.1 Exhauster shall be designed to minimize sound pressure level. Seller shall test and provide final sound pressure level if fan exceeds 85 dBA at 3 ft. from the outline of the equipment, when measured 5 ft. above grade/floor or personnel platform level and under free field conditions.

3.4.2 Exhauster housing shall be designed to withstand 15 psig water flow through it and 125% of the negative design operating pressure as specified in the Exhauster Data Sheets.

3.4.3 Materials of construction used shall be in accordance with materials specified on the Exhauster data sheet.

3.5 Mechanical Requirements

3.5.1 General

3.5.1.1 Exhauster inlets and outlets, including transition piece ends, shall be 150 lb. class raised face stainless steel 316/316L (with maximum carbon content 0.030%) flanges conforming to ANSI dimensions.

3.5.1.2 Exhauster housings shall be designed to prevent any internally propelled missiles from penetrating the housing.

3.5.1.3 Unless otherwise specified on Data Sheets, Exhausters shall exhibit "Leak tightness" in accordance with requirements of Section BA 4142 of ASME AG-1-1997.

3.5.1.4 Exhauster drive arrangement shall be shown on Exhauster Data Sheet. Drive arrangement designations shall be per AMCA 99-2404. Designations for rotation and discharge shall be per AMCA 99-2406.

3.5.1.5 When indicated on the Exhauster Data Sheets that Exhausters shall be of Spark Resistant Construction, Exhausters shall be Type A in accordance with AMCA 99-0401-86.

3.5.1.6 The Exhauster's rotors shall be balanced to Quality Grade 2.5 of ISO 1940-1 with results documented and submitted to the Buyer.

3.5.1.7 The design, manufacture, and testing for exhauster flexible metal hose connection shall be in accordance with ISO 10380 and ASME B31.3, 1996. Non-metallic parts are not permitted. ASTM standard and type/grade for materials of construction shall be included on the fabrication drawings, bill of materials and mechanical data sheets. The connection hoses shall be 24'' overall length and 4" diameter.

3.5.2 Bearings

3.5.2.1 Bearings for Exhausters shall have a minimum L-10 service rating life of 100,000 hours unless otherwise noted on the Data Sheet. Bearing rating life shall be established in accordance with ABMA 9 or 11, as applicable.

3.5.2.2 For all Exhausters, it shall be possible to replace the bearings without disconnecting any piping or disassembling of the Exhauster housing.

3.5.2.3 Extended lube lines and fittings shall be provided as required to permit lubrication during operation.

3.6 Loadings

3.6.1 Seller shall design the Exhausters to be self-supporting and be capable of handling the loads and moments imposed on the Exhausters during testing, packaging, shipping, handling, storage, installation, and operation. Seller shall include the evaluation of the forces associated

with the equipment lifting lift lugs only in the seismic qualification report. Shipping and handling loads will be enveloped by the seismic qualification.

3.6.2 Seller shall complete a seismic analysis of the exhauster equipment. Loadings shall be calculated in accordance with the appropriate requirements Exhibit 3, *Structural Design Loads for Seismic Category III & IV Equipment and Tanks*.

3.7 Electrical Requirements

3.7.1 General

3.7.1.1 Deleted

3.7.1.2 Motor shall be compliant with Exhibit 2, *Low Voltage Induction Motors*.

3.7.1.3 Deleted

3.7.1.4 Motor drive combination shall be suitable for operation for the design conditions shown on the Exhauster Data Sheet.

3.7.1.5 Non-current carrying metallic parts of electrical equipment shall be bonded together and made electrically continuous. Two grounding pads shall be furnished at diagonally opposite corners at the edge of the skid for connection by the Buyer to the area ground grid, per NFPA 70-1999 Article 250.

3.7.1.6 Electrical equipment on the packaged unit shall be bonded to the package unit skid, per NFPA 70-1999 Article 250.

3.7.1.7 The enclosure grounding system shall be installed in conformance to IEEE Guide 1050-1996, Section 5.3.1 "Single point grounding system" and shall comply with NFPA 70-1999 Article 250-112(k), Article 250-118, Article 250-119, Article 250-122, Article 250-134, Article 250-138, and Article 250-97 as applicable. Instrumentation enclosures that house digital and analog signaling circuits shall have an equipment safety ground bus and an isolated signal ground bus.

3.7.1.8 All interconnecting wiring shall be color-coded in a consistent, uniform, manner. Details of the wire color scheme utilized shall be documented on Seller-provided documentation which is submitted to Buyer for review and acceptance. All interconnecting wiring shall be marked with heat-shrink type markers and all terminal blocks shall be clearly identified. All wiring shall be in accordance with NFPA 70-1999, National Electrical Code.

3.7.2 Raceways

3.7.2.1 Deleted

3.7.3 Acceptability of Electrical Equipment

3.7.3.1 All electrical equipment for facility and equipment wiring shall be in accordance with NFPA 70-1999.

3.7.3.2 All electrical equipment, devices, and materials shall be listed and labeled by an OSHA listed National Recognized Testing Laboratory (NRTL).

3.7.3.3 Power supplies shall be NRTL listed or labeled.

3.8 Instrumentation and Control Requirements

3.8.1 Exhausters (DVP-EXHR-00001A/B) shall be provided with an exhauster shaft speed sensor (DVP-SE-8110/8116) and transmitter (DVP-ST-8110/8116) to measure and provide the fan speed. Speed transmitters shall have sensors of non-contact type and be loop powered. Any connecting cables or signal conditioners are required to provide an isolated 4-20 mA signal Output.

3.8.2 Seller shall provide factory mounted terminal/junction box (NEMA 4X housing) for Buyer interconnection to controls and sensors. Circuits of different voltages (service level) shall be terminated on physically separate terminal strips and clearly labeled to show the circuit voltage. Terminal box location shall prevent signal interference from fan power wires or disconnection switch.

3.8.3 Deleted

3.8.4 Deleted

3.8.5 Deleted

3.9 Accessibility and Maintenance

3.9.1 Deleted

3.9.2 Seller's recommended accessibility and recommended spares for each piece of equipment shall be included in Seller's submittal.

3.9.3 Seller shall provide the inspection and maintenance requirements with the recommended intervals to be performed by the Buyer.

3.9.4 Exhausters shall be provided with bolted drive guards that cover the shaft, motor coupling, and bearings. Provisions shall be made for access to the lube fittings without removal of drive guards.

3.9.5 Guards shall cover moving parts on all sides where worker access may occur, including rear portions of moving parts.

3.9.6 The guards shall comply with Seller's standard requirements.

4 Materials

4.1 Materials and Equipment

4.1.1 Seller shall comply with the requirements in Exhibit 4, *Positive Material Identification (PMI) for Shop-Fabrication*; exclude any requirements for black cells and hard-to-reach areas.

4.1.2 PMI is required for the materials specified in Exhibit 4, *Positive Material Identification (PMI) for Shop-Fabrication*, Table 1.

4.1.3 All materials of construction for the Exhausters shall conform to the requirements of this specification, the MDS, and the purchasing documents.

4.1.4 All materials used shall be new and free of defects.

4.1.5 All materials used shall be resistant to deterioration when used in a radioactive environment.

4.1.6 Material test reports of chemical and physical properties shall be provided for pressure retaining components and non-pressure retaining components, including weld filler material used for the fabrication of the Exhausters. Material test reports of chemical and physical properties for the Exhauster impeller and shaft shall be provided by the Seller. Seller shall submit Quality Verification Documents (material test reports) in accordance with the applicable technical specification and the PO Section 3, Form G-321-V.

4.1.7 ASME and/or ASTM material designations and grades shall be indicated on the fabrication drawings, bill of materials and mechanical data sheets.

4.1.8 Seller shall not substitute materials specified in this specification, the applicable documents, the MDS, and the purchasing documents.

4.1.9 All material shall be controlled, issued, handled, and stored with proper identification and traceability. Seller shall prepare and submit material control procedures for Buyer review.

4.1.10 Deleted.

4.2 Prohibited Materials

4.2.1 The materials listed in 24590-WTP-LIST-ESH-16-0001, Restricted Materials List, shall not be used in any supplied equipment and shall not be brought onto the WTP site.

4.2.2 Mercury, lead, aluminum, zinc, their alloys, or materials containing such metals as their basic constituents shall not be used in the construction of the Exhausters. Teflon shall not be used in the construction of the Exhausters.

4.2.3 All materials in contact with stainless steel shall not cause corrosion or other harmful effects:

- The total fluoride/chloride content shall not exceed 200 ppm.
- The total sulfur content will not exceed 400 ppm.
- The total of low melting point metal such as lead, zinc, copper, tin, antimony and mercury shall not exceed 1 percent; mercury shall not exceed 50 ppm.

4.2.4 Asbestos shall not be included in any component of the Exhausters.

4.2.5 Carbon steel shall not be included in any component of the Exhausters that comes into direct contact with the offgas stream.

5 Fabrication

5.1 General

5.1.1 Fabrication of the Exhausters shall conform to the requirements of:

a) this specification
b) the MDS
c) the purchasing documents

5.1.2 All edges shall be rounded and smooth to the touch. All stainless steel surfaces shall be clean, free of stains, scale, and deposits. All weld spatter, slag, and heat affected zone oxides shall be removed.

5.1.3 Seller shall determine and specify tolerances, surface flatness, and finish requirements for assembly and fabrication of the Exhausters at the detailed design stage. At a minimum, all tolerances, surface flatness, and finishes shall be in accordance with the applicable codes, standards, and references documents in Section 2 of this specification.

5.1.4 Compliance with this specification and Buyer's authorization of WPS and PQR shall in no way relieve the Seller of the responsibility of providing welds which are sound and suited to the services for which they are intended.

5.1.5 Welding symbols shall be in accordance with AWS A2.4.

5.1.6 Seller shall ensure that safety measures for the protection of welders and operators involved in welding and cutting shall be in accordance with the practices specified in the ANSI Z49.1, plus all local, state, federal, and other governing regulations.

5.1.7 Buyer reserves the right to remove test specimens from any portion of the work to verify the quality of the welding. The Seller, at his expense, shall repair or replace any base metal or filler metal found to be defective.

5.1.8 Only Buyer-reviewed procedures and revisions shall be used. When requested, the Seller shall make available to the Buyer the control measures that will be used to ensure that the weld procedures used are current and reviewed for all welding. Welds made to procedures that are not pre-qualified or have not been properly qualified and authorized by Buyer shall be rejected and completely removed.

5.1.9 Cleanliness shall be maintained throughout welding. All stubs, rods, flux, slag and other foreign materials shall be removed from the structure.

5.1.10 Provide back-up plates and run-out bars as required for full penetration welds. Run-out bars shall be removed upon completion. Back-up plates shall be as shown on the issued design drawings.

5.1.11 To avoid iron contamination, austenitic stainless steels shall be protected from the grinding and welding of carbon steels. Only tools (grinders, wire brushes, etc.) designated for use with austenitic stainless steels shall be used in the welding and fabrication of austenitic stainless steel weldments.

5.1.12 All surfaces to be welded shall be free of paint, oil, dirt, scale, rust, oxides, and other foreign materials detrimental to weld soundness. All joints shall be free of moisture prior to welding.

The welding of stainless steel components to galvanized or previously galvanized carbon steel is prohibited. The welding of stainless steel components to carbon steel components coated with zinc-bearing paint is also prohibited even if the coating has been removed.

5.1.13 All base metals used shall be traceable to a material test report. The material test report shall have actual test report values.

5.1.14 Weld bevels may be prepared by machining, grinding, or thermal cutting. The bevel surface shall be smooth and meet the required weld joint design. All weld bevels shall be ground / machined to bright metal prior to welding.

5.1.15 The parts to be joined by fillet welds shall be brought together as closely as practicable. The gap between faying surfaces of lap joints should not exceed 1/16 inch. If the separation is greater than 1/16 inch after straightening and assembly, the leg of the fillet weld shall be increased by the amount of separation, but the gap shall not exceed 3/16 inch. The use of filler material as shim stock is prohibited.

5.1.16 Flux, weld spatter, and slag shall be removed from each weld bead prior to depositing each succeeding pass.

5.1.17 Where full penetration joints are welded from both sides, the first pass shall be back-chipped, ground, or arc-gouged to sound metal before welding the second side. The requirement for back gouging shall be stated on the WPS.

5.1.18 Vertical welding shall be vertical-up unless otherwise approved for each specific application.

5.1.19 Care should be taken to minimize distortion during welding. Staggering and back-stepping are acceptable methods.

5.1.20 Shims and plates may be welded as detailed by the design.

5.1.21 The maximum interpass temperature shall not exceed 350 °F for austenitic stainless steels.

5.1.22 Equipment manufacturers' requirements and limitations on welding and cutting/gouging in terms of preheat/interpass temperature, heat input, technique and methods shall be followed.

5.1.23 Preheat shall be per the applicable Code unless stated otherwise.

5.1.24 The Seller shall submit the following for Buyer review and acceptance prior to use in accordance with the G-321-E:

- Welding Procedure Specifications and Procedure Qualification Records
- Shop drawings
- NDE procedures

5.2 Welding and Non-Destructive Examination (NDE) Requirements

5.2.1 Welding of the housing joints and housing to mounting platform joints shall conform to the requirements of ASME AG-1 2015 AA-6300. Qualification of welding procedure specifications and welder or welding operators shall be in accordance with ASME AG-1-2015.

Non-Destructive Examination (NDE) and inspection requirements shall be in accordance with AA-6331 and AA-6334.

a) 100% Visual Testing (VT) shall be performed on all welds. The VT acceptance criteria shall be in accordance with AA-6331.

b) 100% Liquid Penetrant Testing (PT) shall be performed in accordance with ASTM E165 and the PT acceptance criteria shall be in accordance with AA-6334.

c) Deleted

5.2.2 Welding procedure specifications to be used in the fabrication of the mounting frame and welders or welding operators performing welding of the mounting frame shall be qualified in accordance with of ASME AG-1-2015.

NDE procedures, NDE methods, and NDE acceptance criteria shall be in accordance with ASME AG-1-2015.

5.2.3 For inlet and outlet connections, welding procedure specifications (WPSs) used to join the raised face flange to the housing assembly or transition pieces (ASME AG-1) shall be qualified in accordance with the requirements of ASME AG-1-2015. Welders and welding operators shall be qualified in accordance with ASME AG-1-2015.

5.2.4 Welding procedure specifications for welding of rotating parts shall be qualified in accordance with ASME AG-1-2015. Welders or Weld operators shall be qualified in accordance with ASME AG-1-2015.

NDE of all fillet welds and groove welds of rotating parts (complete joint penetration and partial joint penetration) perform 100% PT and VT in accordance with ASME AG-1-2015.

5.2.5 Repairs required as a result of weld rejection by either Buyer or Seller shall be fully documented in accordance with Seller's quality assurance (QA) program. Weld repairs shall be performed in accordance with a buyer approved WPS. Weld repair records shall include NDE reports that provide verification of defect removal and soundness of the completed weld. Weld repair records shall be included with the document page.

5.2.6 Welding procedure specifications (WPSs) and procedure qualification records (PQRs) shall be submitted to Buyer for review and permission to proceed prior to use. The WPSs and PQRs shall be submitted with a weld map in order to determine the suitability of the WPS for the weld application. Each WPS shall be prepared and qualified in accordance with the requirements of the above listed standards.

5.2.7 The Seller shall show the applicable WPS and the nondestructive examination (NDE) method for each weld joint on the weld map. The weld map shall identify each joint with a unique identification number. For each weld joint, the following items shall be specified in the weld map: the joint identification, the joint type, the components to be joined, material specification for each base metal component to be joined, material thickness of the components to be joined, weld filler specification for the filler metal, type of NDE required, the extent of NDE required, the NDE procedure number to be used for examination, the WPS number, and the PMI requirement (yes/no). The weld map may consist of one or more of the following: shop drawings, the applicable weld joint detail, fabrication drawing notes, a table, or a matrix.

5.2.8 The Seller's Welder Qualification Records shall be current and made available to the Buyer upon request. All welders and welding operators shall be qualified per the applicable welding code described above. The Buyer reserves the right to require the testing or retesting of welders for qualification in accordance with the applicable code. All costs and material required for the qualification of welders shall be at the Seller's expense.

5.2.9 Tack welds shall be made using a Buyer-accepted WPS with weld filler material suitable for the base material.

5.2.10 After opening shipping containers of electrodes, fluxes, and other welding materials, their storage and handling shall be as specified in the manufacturer's recommendations and per applicable welding code requirements.

5.2.11 Deleted

5.2.12 Metal-cored electrodes shall not be used, unless approved by the Buyer.

5.2.13 Welding materials shall be selected so that the deposited weld metal is similar in chemical composition and not significantly harder or stronger than the base metal.

5.2.14 Acceptable Welding Processes and Limitations:

5.2.14.1 Shielded Metal Arc Welding – SMAW

5.2.14.2 Gas Metal-Arc Welding – GMAW: Spray, including pulse spray transfer – unlimited thickness; Globular metal transfer – 3/8-inch maximum material thickness; Short circuiting transfer mode – Prequalified WPS- 3/16-inch maximum material thickness, Qualified WPS - 1/4-inch maximum material thickness; Surface Tension Transfer® – Prequalified WPS- 3/16-inch maximum material thickness, Qualified WPS - 1/4-inch maximum material thickness

5.2.14.3 Flux Cored Arc Welding – FCAW

5.2.14.4 Gas Tungsten Arc Welding – GTAW

5.2.14.5 Fabrication welding may be achieved by any one or combination of the above welding processes. The use of other welding processes shall require specific written authorization by Buyer.

6 Tests and Inspections

6.1 General

6.1.1 Seller shall conduct and be responsible for all shop tests called for in this specification and applicable Standard and referenced documents. Seller shall furnish all facilities necessary for the performance of such tests.

6.1.2 Seller shall submit an inspection and test plan for Buyer review.

6.1.3 Seller shall complete and submit reports of all testing and inspections required by this specification and per Form G-321-E & G-321-V of the MR. Each report shall identify the

component tested or inspected, date performed, applicable procedures, acceptance criteria, signature of person performing the test or inspection, results, and conclusions.

6.1.4 Seller shall submit reports of all control and calibration of measuring and test equipment which shall be in accordance with Article AA-5130 of ASME AG-1.

6.2 Personnel Certifications

6.2.1 Personnel performing nondestructive examination (NDE) or reviewing NDE results shall be certified to ASNT-SNT-TC-1 A, Level II or Level III. Personnel who perform NDE (including magnetic particle testing, ultrasonic testing, liquid penetrant testing, electromagnetic testing, leak testing, acoustic emission testing, and visual testing) to specified acceptance criteria shall be qualified to a “Written Practice” (or procedure) meeting the requirement of the American Society for Nondestructive Testing Recommended Practice No. SNT-TC-1A. This 'Written Practice" must meet all the requirements from any one given edition of SNT-TC-1A (and its applicable supplements) as follows: 1988, 1992, 1996, 2001, and 2006. Only the SNT-TC-1A edition selected and its applicable supplements shall be used in the 'Written Practice" and that edition shall be met in its entirety (except as shown below). Combining SNT-TC-1A contents from one edition year with another edition year is prohibited, except as follows: If the 1988, 1992, or 1996 editions are utilized, the additional requirements for periodic technical performance evaluation and documentation found in paragraphs 10.2 and 12.1 of the 2006 Edition shall also be met.

The re-certification interval for Level III nondestructive examination personnel shall not exceed five years.

6.2.2 Seller shall submit personnel qualification documents of Seller’s inspection and test personnel, for Buyer review.

6.3 Non-Destructive Examinations

6.3.1 NDE procedures shall be submitted to Buyer for review and permission to proceed prior to use.

6.3.2 Seller shall perform NDE in accordance with Seller’s procedures. NDE may include visual and liquid penetrant exam procedures.

6.3.3 Exhauster pressure boundary welds shall be 100% visual tested and liquid penetrant tested at a minimum. Exhauster non-pressure boundary welds shall be 100% visual tested.

6.3.4 Seller shall submit Quality Verification Documents (NDE reports) in accordance with the applicable technical specification and the PO Section 3, Form G-321-V.

6.4 Shop Tests

6.4.1 Seller shall perform standard factory tests, which at a minimum, include the tests listed in Section 6.4.2 through 6.4.9, as well as all tests called out in following Exhibit:

a) Deleted
b) Exhibit 2: *Low Voltage Induction Motors*, Section 5.1
c) Deleted

6.4.2 Exhauster performance testing shall be in accordance with AMCA 99 and 210.

6.4.3 Functional performance test for electrical equipment.

6.4.4 Exhauster casing pressure test.

6.4.5 Pressure testing of shaft seal.

6.4.6 Vibration performance shall be checked and reported over the entire range of the Exhauster tests.

6.4.7 A meg-ohm test of all wires shall be performed prior to termination of all wires pulled into conduit. The meg-ohm test results shall be certified, documented and submitted to Buyer for review.

6.4.8 A continuity check of all wiring shall be performed to verify conformance with Seller's wiring schematics. The continuity check test results shall be certified, documented and submitted to Buyer for review.

6.4.9 Seller shall provide all equipment to perform a lifting test in the shop, demonstrating that the lifting lugs or attachment points are adequate to support the Exhausters without any distortion.

6.5 Site Tests

6.5.1 Buyer startup personnel will perform commission testing after initial installation at the WTP.

7 Preparation for Shipment

7.1 General Requirements

7.1.1 Equipment shall be packaged, prepared for shipment, handled, and stored in accordance with 24590-WTP-3PS-G000-T0003, *General Specification for Packaging, Handling, and Storage Requirements*.

7.1.2 All results of shop tests and inspections for the Exhausters shall be reviewed by the Buyer prior to preparing and packaging the Exhausters for shipment.

7.1.3 Seller shall provide lifting eyes or lugs to facilitate lifting and handling of the exhausters. Lifting eyes or lugs shall be certified suitable for the safe, balanced lifting and the handling of the equipment.

7.2 Cleanliness

7.2.1 Seller's cleaning procedures shall be submitted to the Buyer for information

7.2.2 Prior to surface preparation, visually examine welds, the exhauster impeller and air stream surfaces of the Exhauster housing. Remove all dirt, oil and grease, loose mill scale, weld spatter and other foreign matter.

7.3 Tagging

7.3.1 Nameplates shall be in accordance with Exhibit 2: *Low Voltage Induction Motors,* Section 4.3.

7.3.2 The information shall be stamped or etched on the nameplate using characters no less than ¼ inch tall.

7.3.3 The attachment and location of nameplates shall be in accordance of Articles AA-9130 and AA-9140 of ASME AG-1.

7.3.4 All packages shall be clearly and suitably tagged to at least show the Seller's name, Buyer's name, plant item number, purchase order number, packaged contents, and parts for each packaged.

7.3.5 Metal tags that identify the maximum design load (excluding dynamic load factor) shall be provided for all lifting lugs, bails and other lifting points.

7.3.6 Deleted

7.3.7 Instruments shall have instrument tags showing the instrument tag number, manufacturer's name, model or serial number, Buyer's PO number, body material, pressure, and temperature rating.

7.4 Packaging and Shipping Instructions

7.4.1 Exhauster inlet and outlet connections shall be provided with temporary protective covers. These covers will be removed prior to connection to Buyer's piping.

8 Quality Assurance

The SELLER's standard manufacturing Quality Assurance Program (QAP) shall be used to monitor and maintain the acceptable activities to meet the requirements of this procurement. A copy of the manual shall be submitted for information only.

8.1 Deleted.

8.2 Deleted.

9 Configuration Management

9.1 General

9.1.1 The equipment covered by this specification is identified with the plant item number shown in the MDS in Part 2 of the MR. Each item shall be identified in accordance with Section 7.3 of this specification. Configuration Management is maintained by conformance to approved drawings and procedures. If approved drawings and procedures cannot be followed, Buyer shall be promptly notified.

10 Documentation and Submittals

10.1 General

10.1.1 Seller shall submit to Buyer the Engineering and Quality Verification documents in the forms, quantities, and timing shown in Form G-321-E, Engineering Document Requirements, and Form G-321-V, Quality Verification Document Requirements, in Part 2 of the MR.

10.1.2 All deviations and/or conflicts considered for incorporation in the work must be submitted to the Buyer on completed Supplier Deviation Disposition Request (SDDR) form, as attached to Part 2 of the MR, for Buyer's approval.

10.2 Schedules

10.2.1 Schedule and Drawing Index

A schedule and drawing index (15EX form) shall be submitted which tracks the scheduled and actual delivery of each submittal.

10.2.2 Engineering and Fabrication Schedule

Seller shall submit an engineering and fabrication schedule with bar charts or critical path method diagrams detailing the chronological sequence of events. Schedule shall include Supplier Quality witness/hold points. Schedule does not suffice for formal notification for witness/hold points for which a separate notification is still required in accordance with the witness/hold point requirements (i.e. 5 days advance notice).

10.3 Submittals

10.3.1 Drawings

10.3.1.1 Outline Drawings

Seller shall provide drawings with equipment layout and outline dimensions. Drawings shall show external envelope, including lugs, centerline(s), location and size for electrical cable, service connections, isometrics, and mounting details. A dimensional layout drawing shall show the location of electrical and control equipment. Outline and dimensional drawings shall be provided for all instruments shipped loose for Buyer's installation. The drawing shall include the instrument tag number. Instrument installation details shall be submitted for the Buyer's review one month prior to proceeding with instrument installations.

In addition, Seller shall provide drawings to meet the requirements of the following:

a) Deleted
b) Exhibit 2, *Low Voltage Induction Motors*, Section 9.1.1(b).
c) Deleted
d) Deleted
e) Exhibit 3, *Structural Design Loads for Seismic III & IV Equipment and Tanks,* Section 6.

10.3.1.2 Electrical Drawings, Schematics, and Wiring Drawings

Seller shall provide single line diagrams, schematic diagrams, equipment internal wiring diagrams, instrument loop diagrams, and interconnection wiring diagrams for electrical items. Point to point wiring diagrams shall identify all instruments with the Buyer's tag numbers, grounding methods for incoming cable shields, and instruments with their terminals in relative location. These items shall be in accordance with the following:

a) Deleted
b) Exhibit 2, *Low Voltage Induction Motors*, Section 9.1.1(c).
c) Deleted
d) Deleted

10.3.1.3 Assembly Drawings

Seller shall provide assembly drawings per Exhibit 2, *Low Voltage Induction Motors*, Section 9.1.1(i).

10.3.2 Data Sheets

10.3.2.1 Mechanical Data Sheet

Seller shall submit Buyer's Exhauster Mechanical data sheet, completely filled out by Seller showing all information required to determine that the units are of the design and materials specified here in. Exhauster performance curves at 60%, 80% and 100% of synchronous speed (3600 RPM) shall be provided.

10.3.2.2 Motor Data Sheets

Seller shall submit completed motor data sheets in accordance with Exhibit 2, *Low Voltage Induction Motors*, Section 9.1.1(a).

10.3.2.3 ASD Data Sheets

Deleted

10.3.2.4 Speed Sensor and Transmitter Data Sheet

Seller shall submit Seller's speed sensor and transmitter data sheets for Buyer's review and acceptance.

10.3.2.5 Deleted.

10.3.3 Procedures

10.3.3.1 Electrical Test Procedures

Seller shall provide electrical test procedures to demonstrate that design functional and operational parameters (impulse, overload, continuity, voltage, temperature rise) for electrical equipment associated with exhauster are met.

In addition, electrical test procedures shall be in accordance with Exhibit 2, *Low Voltage Induction Motors*, Section 5.1

10.3.3.2 Welding procedures, NDE Procedures, and Personnel Qualifications

Seller shall submit the following procedures for Buyer review:

a) Welding procedures as noted in section 5.2 of this specification
b) NDE procedures as noted in section 6.3 of this specification
c) Personnel qualification as noted in section 6.2.2 of this specification.

10.3.3.3 Material Control Procedures

Seller shall provide material control procedures as described in Section 4.1.9 of this specification.

10.3.3.4 Functional Shop Test Procedure

Seller shall submit functional shop test procedure of instrumentation functional testing to demonstrate to the Buyer the functionality of the system. A simulated input signal shall be injected, varied over the full range for each device, calibrated and checked for correct operation. Instruments shall be calibrated with test and calibration equipment that are traceable to NIST standards. Supplier shall provide certification of calibration for all test equipment used to calibrate instruments.

10.3.3.5 Positive Material Identification (PMI) Procedures

Seller shall submit procedures covering how PMI will be conducted and documented per Exhibit 4, *Positive Material Identification (PMI) for Shop-Fabrication*, Section 3.2.

Additionally, Seller shall submit PMI welds produced by subcontractor as part of Seller quality control verification process.

10.3.3.6 Pressure Test Procedure

Seller shall submit pressure testing procedures that address pressure and shaft leakage tests.

10.3.3.7 Inspection Procedures

Seller shall provide inspection procedures for the purpose of determining that specified requirements (e.g. dimensions, properties, performance results, etc.) are met.

10.3.3.8 Cleaning Procedures

Seller shall provide cleaning procedure as noted in Section 7.2 of this specification.

10.3.3.9 Radiographic Examination Procedures

Deleted

10.3.3.10 Liquid Penetrant Examination Procedures

Seller shall conduct weld inspections for soundness using liquid penetrant examinations on each exhauster in accordance with Section 6.3 of this specification.

10.3.3.11 Weld Consumable Storage and Handling Procedure

Deleted

10.3.4 Lists

10.3.4.1 Recommended Spare Parts List

Seller shall provide a list of recommended spare parts and items subject to wear needing periodic replacement, including the cost of each item. The list shall include manufacturer name, model number, shelf life, storage requirements, and lead time for each item.

In addition, the recommended spare parts list shall comply with the following:

a) Deleted
b) Exhibit 2, *Low Voltage Induction Motors*, Section 9.1.1(g).
c) Deleted

10.3.4.2 Material List

Seller shall provide a material list with specific model, number, manufacturer and catalog cut sheets for all equipment.

10.3.4.3 Electrical Loads

Deleted

10.3.4.4 Deleted.

10.3.4.5 Instruments List

Seller shall populate instrument list in MS Access format provided by Buyer which lists each instrument and is arranged in numerical order. Seller shall populate the required fields as follows:

a) Instrument tag number
b) Seller's referenced tag number if applicable
c) Service description
d) Instrument type
e) Signal type
f) Data sheet number
g) Location drawing number
h) Instrument installation details
i) Manufacturer name
j) Model number
k) Calibration range of instrument
l) Set point
m) Wiring diagram number
n) Schematic drawing number
o) Device address of serial communication link data
p) I/O address of serial communication link data
q) Shipped status (installed or loose)

10.3.4.6 Nameplate Engraving Drawings

Seller shall provide nameplate engraving drawings and list for all nameplates furnished. Nameplates shall meet the requirements of Section 7.3 of this specification.

In addition, nameplate engravings list shall be in accordance with:

a) Deleted
b) Exhibit 2, *Low Voltage Induction Motors*, Section 4.3

10.3.4.7 Bill of Materials (BOM)

Seller shall provide Bill of Materials (BOM) showing in complete detail split shipment packaging content with associated shipping dates, any sub-tier BOMs, and shipped loose component lists. As a minimum, BOM shall indicate manufacturer's name, part number, Buyer's tag number, Seller's reference drawing number(s), forecast ship date, actual ship date, quantity, weight, length, width, and height for each item.

10.3.5 Reports

10.3.5.1 Mechanical Test Reports

Seller shall provide a test report in accordance with Section 6 of this specification and include the following:

a) Exhauster housing and shaft seal leakage tests reports
b) Exhauster performance tests reports, including Exhauster curves
c) Sound pressure levels
d) Exhauster wheel/shaft vibration and mechanical test reports

10.3.5.2 Electrical Test Reports

Seller shall provide test reports that address the results of tests performed in accordance with Buyer-approved electrical test procedures.

In addition, electrical test reports shall be in accordance with Exhibit 2, *Low Voltage Induction Motors*, Sections 5.1 and 9.1.1(j)

10.3.5.3 Pressure Test Reports

Seller shall submit pressure test report as noted in Section 6.4.5 of this specification.

10.3.5.4 Inspection and Verification Reports

Seller shall submit quality records and test results for inspection and verification reports, liquid penetrant examination and verification reports, pressure testing and verification reports, visual inspection and verification reports.

Seller shall supply NDE test reports in accordance with Section 6.3 of this specification and welding codes listed in Section 5.2 of this specification.

10.3.5.5 Certificates of Compliance

Seller shall submit a Certificate of Compliance (C of C) document for review and approval by the AHJ that lists the USA Electrical Standard(s) that the equipment is evaluated to for its nationally recognized testing laboratories (NRTL) Listing. The certification shall confirm that the NRTL label will be shown

on the OSHA website including the additional markings required to indicate acceptability for use in the USA. Seller shall certify that lifting eyes or lugs are suitable for the safe balanced lifting and handling of the equipment.

10.3.5.6 Motor Test Report

Deleted

10.3.5.7 Positive Material Identification (PMI) Reports

Seller shall submit PMI testing reports, including a PMI map per Exhibit 4, *Positive Material Identification (PMI) for Shop-Fabrication*, Section 6 of this specification.

10.3.5.8 NRTL Field Evaluation Reports

Deleted

10.3.5.9 ASD Manufacturer Shop Test Reports

Deleted

10.3.5.10 ASD Factory Acceptance Plans and Test Reports

Deleted

10.3.5.11 Exhauster Integral Test Report with Motor

Seller shall submit exhauster integral test report after a complete test with exhauster and motor contained as an assembly with all control devices, and provided instrumentation to demonstrate the parameters required for successful operation of the integrated exhauster system.

10.3.5.12 Exhauster's Rotors Balance Report

Seller shall provide exhauster's rotors balance report as described in Section 3.5.1.6 of this specification.

10.3.5.13 Weld Map

Seller shall submit a weld map which includes all welds in accordance with industry standard and Section 5.2.7 of this specification.

10.3.5.14 Deleted.

10.3.5.15 Material Test Reports

Seller shall submit material test report (MTR) in accordance with Section 4.1.6 of this specification.

10.3.5.16 Deleted.

10.3.5.17 Code Compliance Matrix

Deleted

10.3.5.18 RT Film and Reader Sheets

Deleted

10.3.5.19 Design Analysis Report

Deleted

10.3.5.20 Seismic Analysis

Seller shall provide Seismic Data Report in accordance with Exhibit 3, *Structural Design Loads for Seismic Category III & IV Equipment and Tanks*.

10.3.5.21 Certificates and Inspection Reports

Deleted

10.3.5.22 Code Data Report

Deleted

10.3.6 Calculations

10.3.6.1 Deleted

10.3.7 Product Data

10.3.7.1 Inspection and Test Plans

Seller shall provide their work inspections and tests plans for exhauster and motor.

10.3.7.2 Safety Data Sheets (SDS)

Seller shall submit SDSs for all chemicals and hazardous materials shipped to WTP, including but not limited to lubricants, gears oils, greases, solvent, etc.

10.3.7.3 Shipping Preparation

Seller shall provide shipping information in accordance with 24590-WTP-3PS-G000-T0003, *Engineering Specification for Packaging, Handling, and Storage Requirements,* Section 11.2 (drawings and a proposed tie down plan) and in compliance with the proper nameplate tagging in place per Sections 7.3.1 and 7.3.2 of this specification.

10.3.7.4 Software Configuration Documentation

Deleted

10.3.7.5 Functional Description

Deleted

10.3.7.6 Motor Description

Seller shall provide lubricant and gasket and seal information in accordance with Exhibit 2, *Low Voltage Induction Motors*, Section 9.1.1(k) and (l).

10.3.7.7 Catalog Data

Deleted

10.3.7.8 Documentation Showing Harmonic Spectrum

Deleted

10.3.7.9 Ferrite Data

Seller shall submit ferrite data on welding materials.

10.3.7.10 Calibration Certificate for Instruments

Seller shall provide certification that all instruments supplied have been calibrated for the ranges appropriate for the selected application using National Institute of Standards and Technology (NIST) traceable calibrators and calibrating equipment. Seller shall provide calibration certificates for each tag number, with model type, model number, and serial number.

10.3.7.11 Motor Data

Seller shall provide the following data (if not already provided on motor data sheets) for use by others to ensure proper ASD interfaces:

a) Speed-torque Curve
b) NEMA Design Type
c) Full Load Current
d) Rated Horsepower
e) Voltage
f) Maximum Safe Operating Speed
g) Full Load Speed
h) Enclosure Type
i) Service Factor
j) Insulation Class
k) Temperature Rise Above 40 °C Ambient
l) Locked Rotor Current at 100 % Rated Voltage
m) Duty Rating
n) Resonant speed of motor/driven equipment in lateral, axial and torsional modes
o) Time to ramp up to full motor speed from start
p) Time to ramp down from full motor speed to stop

10.3.8 Manuals

10.3.8.1 Operation and Maintenance Manuals

Operation and maintenance manuals shall provide complete, detailed descriptions of components and instrumentation with data sheets showing design, construction, and performance data for equipment. Manual shall include drawings for operation, maintenance and repair, maintenance requirements, instructions and operational trouble-shooting guides. Manual/drawings shall include Original Equipment Manufacturer (OEM) part numbers.

In addition, Seller shall provide motor installation, operation, and maintenance manual and maintenance procedures, in accordance with Exhibit 2, *Low Voltage Induction Motors*, Section 9.1.1(f) and (n).

10.3.8.2 Installation Instruction Manual

Seller shall submit an Installation Instruction Manual in accordance with 24590-WTP-3PS-G000-T0003, *Engineering Specification for Packaging, Handling, and Storage Requirements*, Section 11.1.1.

Erection and installation manual shall provide complete, detailed procedures for installing and placing equipment in initial operation. These manuals shall include all erection and installation drawings.

10.3.8.3 Site Storage, Handling, and Maintenance Requirements Manuals

Seller shall submit a Site Storage, Handling, and Maintenance Requirements Manual with procedures and instructions for site storage, handling, and maintenance that will preserve equipment until it is put into operation in accordance with 24590-WTP-3PS-G000-T0003, *Engineering Specification for Packaging, Handling, and Storage Requirements*, Section 11.1.2.

10.3.8.4 Quality Assurance Manual

Seller shall submit their Quality Assurance Program (QAP) manual for information only (Section 8).

11 Design Changes Incorporated by Reference

24590-WTP-SDDR-MS-18-00018*

*New design change

Attachment A: Deleted.

Exhibit 1
Electrical Requirements for Packaged Equipment

Deleted

Exhibit 2

Low Voltage Induction Motors

Specification 24590-WTP-3PS-MUMI-T0002, Rev. 3 was used to create the following exhibit. Specification change notices (SCNs) have been evaluated and there are no applicable SCNs.

1 Scope	
1.1 General	
1.1.2	If conflicts arise between this exhibit and the primary mechanical packaged specification, the primary specification shall take precedence.
1.2 Equipment, Material, and Services Required	
1.2.2	All motors covered by this exhibit shall conform to the applicable requirements of NEMA MG1, ANSI, and NEC standards, except where a deviation is approved by the Buyer.
1.2.3	Motors manufactured to IEC standards, shall meet the applicable requirements of IEC-60034 and IEC-60072.
1.2.5	All materials and components associated with the fabrication of motors per this exhibit shall be new. Refurbished materials are not acceptable.
1.3 Acceptability Criteria	
1.3.1	All electrical equipment and material shall be suitable for installation and use in conformity with Article 110-3 of the National Electrical Code, NFPA 70-1999.
1.5 Definitions	Buyer: Bechtel National Inc. Supplier: This is a comprehensive term and includes seller, vendor, contractor, subcontractor, sub-supplier, etc. Primary Specification: The mechanical packaged equipment specification in which this "Low Voltage Induction Motors" exhibit is referenced.
2 Applicable Documents	For the purposes of this exhibit, the word "should" shall be replaced with the word "shall" wherever it appears in the referenced Codes and Standards. Any conflicts between the referenced documents shall be identified to the Buyer in writing for resolution. In general, when resolving conflicts, the following order of precedence shall apply: • Purchase Order (by the primary specification) • Data Sheets • This Exhibit • Referenced Codes and Standards • Manufacturer Standard
2.1 Codes	NFPA 70-1999 - National Electrical Code
2.2 Industry Standards	IEEE Std. 85 - Test Procedure for Airborne Sound Measurements on Rotating Electric Machinery IEEE Std.112 - Test Procedure for Poly-phase Induction Motors and Generators NEMA MG 1-1998 - Motors and Generators ABMA 9-1990 - Load Ratings and Fatigue life for Ball Bearings ABMA 11-1999 - Load Ratings and Fatigue Life for Roller Bearings IEC-60034 (As applicable) - Rotating Electrical Machines IEC-60072 (As applicable) - Dimensions and Output Series for Rotating Electrical Machines
3 Design Requirements	
3.1 General	
3.1.1	Motors shall be rated for continuous duty for 3-phase, 60 Hz, 460 volts.
3.1.2	All motors shall be NEMA Design B, except in special applications requiring higher starting torques where other NEMA Design is permitted.

3.2 Environmental Conditions	The actual environmental conditions requirement of the motors will be shown in the corresponding primary specification/data sheets.
3.3 Electrical Performance	
3.3.1 Voltage Rating	• Motors 1/2 Hp to 300 Hp - 460 volts, 3-phase, 60 Hz Note: Deviation from these limits will be permissible if technically justified on a case-by-case basis.
3.3.2 Insulation System	Motors shall be furnished with Class F insulation minimum, and shall be selected for operation within their full load rating without applying the service factor.
3.3.3 Temperature Rise	Ratings shall be based on a maximum ambient temperature of 40 °C, 3,300 feet (1000 m) altitude or less, with a maximum temperature rise of 80 °C by resistance at 1.0 service factor, (90 °C temperature rise at service factor 1.15 up to 150HP). Inverter duty motors shall not exceed Class F rise at any speed under the defined load.
3.3.4 Locked Rotor Current	Unless otherwise approved by the Buyer, the locked rotor current of motors shall not exceed the values as shown in NEMA MG-1-1998, section 12.35.1 "Maximum Locked-Rotor Current for 60-Hz Design B, C, and D Motors at 230 Volts". The locked-rotor current of motors designed for voltage 460 shall be proportional to the ratio, 230/460.
3.3.5 Service Factor	The motor shall be sized so that it will not be loaded beyond its design power rating at service factor of 1.0.
3.3.6 Starting Duty	The motor shall be capable of two successive starts with the motor already at full load temperature, or three successive motor starts at ambient temperature, accelerating the load from zero up to full load speed with the motor terminal voltage between 80% and/or 110% of the rated voltage.
3.5 Mechanical Requirements	
3.5.1 General	
3.5.1.1	All motors heavier than 50 lbs shall be supplied with an eye bolt for lifting.
3.5.1.2	Where practical, the motor base shall be drilled for ground connection. A bolt shall be provided complete with nut and washers.
3.5.1.3	Vertical jacking bolts shall be furnished on all horizontal motors 1000 lbs and heavier.
3.5.1.5	Protection shall be provided against galvanic action between dissimilar metals by the use of gaskets, washers or other appropriate means.
3.5.2 Motor Enclosures	
3.5.2.1	Motor enclosures as required on the data sheets, shall be as follows: • Motors ½ hp up to 200 hp: TEFC or TENV (IP54 for IEC motors)
3.5.2.2	Motor enclosures, bearing bracket and fan guard shall preferably be of ferrous material unless otherwise specified.
3.5.3 Drains	Where practical, corrosion resistant, replaceable automatic drainage fittings shall be provided at the low point(s) of the motor enclosure for water drainage.
3.5.4 Mounting	The mounting and shaft configuration on all motors shall be defined by the driven equipment manufacturer.
3.5.5 Bearing	
3.5.5.1	Unless otherwise indicated on the motor data sheets, continuous duty motors shall have anti-friction type bearings in accordance with the motor manufacturer's standard design. The bearings shall have basic rating life L-10 of 26,280 h minimum per ABMA 9-1990 or ABMA 11-1999.
3.5.6 Shaft Seals	
3.5.6.1	All motors, except those required to be explosion proof, shall have shaft seals suitable for the environment specified.

3.5.6.2	Shaft seals for continuous duty motors, shall be non-contact-while-rotating type and shall be used on both motor ends.
3.5.7 Rotor	Unless otherwise specified, all motors shall have die cast aluminum rotor cages as standard.
3.5.8 Bearing Lubrication	The lubricant and frequency of lubrication of the motors shall be defined by the manufacturer.
3.6 Conduit Boxes	
3.6.1 Motor Leads Conduit Box	a) Conduit boxes shall be rotatable in 90° turns, gasketed, cast iron construction with tapped conduit entrance hole(s). b) Conduit boxes for explosion proof motors shall have a machined metal to metal fit. c) A ground lug shall be provided inside the conduit box on all motors. d) Conduit box size shall be one size larger than NEMA MG-l/NEC standard.
4 Materials	
4.1 Prohibited Materials	The use of asbestos, PCB and mercury in the manufacture, fabrication, assembly and finish of the motors are prohibited.
4.2 Special Requirements	
4.2.1	Design requirements for special motors shall be determined jointly by the Supplier and the Buyer prior to any fabrication of the motor.
4.2.2	Motors for adjustable speed applications shall be rated for inverter duty. They shall be selected by the supplier, and designed and tested in accordance with NEMA MG-1 part 31.
4.3 Nameplates	Each motor shall have a non-corrosive stainless steel nameplate with no less than the minimum information called for in NEMA MG 1. The nameplates shall be attached with pins of the same materials, with the following data as a minimum: 1. Manufacturer's Type and Frame designation 2. Horsepower output 3. Time Rating 4. Temperature rise/Insulation Class 5. Speed at rated Load 6. Frequency 7. Number of Phases 8. Rated Voltage 9. Rated Load Current 10. Code Letter for Locked-rotor kVA 11. Service Factor 12. Buyer's Motor Tag No. Additional Nameplate Information: 1. Type of Enclosure 2. Manufacturer's name 3. Serial number or date of manufacture 4. Space heater voltage/rating
4.4 Noise Level	
4.4.1	Sound level shall be limited to values per NEMA MG-1, Table 9-1.
5 Tests and Inspections	
5.1 Shop Tests	
5.1.1	Unless with Buyer's prior written approval, all motors, size and type, shall be subjected to a "routine test". A complete or "full test" is required for motors if identified by the primary specification. All tests shall be performed in accordance with applicable National Codes and Industry Standards and/or Manufacturer Standard test procedures and acceptance. As required, all tests shall be performed at the manufacturer's facility. Certified test results shall be

	provided as identified in the primary specification.
5.1.2	The primary equipment Supplier shall maintain all test schedules and upon notification, the Buyer has the option to witness all the tests to be performed on the motor(s). The primary equipment Supplier has the ultimate responsibility of all submittals.
5.1.3	As a minimum, the following are considered "Routine Test" and "Full Test".
5.1.3.1	Routine Test: a) Measurement of winding resistance (cold). b) No-load readings of current, power, and nominal speed at rated voltage and frequency. c) Mechanical vibration check in accordance with NEMA MG-1, Part 7, using either elastic or rigid mount. d) High potential test in accordance with Paragraph 12.3 of NEMA MG-1 Part 12.
5.1.3.2	Full test (Performance Test): a) Not used. b) Not used. c) Not used. d) High potential test in accordance with Paragraph 12.3 of NEMA MG-1 Part 12. e) Inspection (at full load) of bearings and mechanical operation of motor. f) Not used. g) Not used. h) Not used. i) Not used. j) Measurement to allow calculation of efficiency at full, three quarter and half load. k) Measurement to allow calculation of power factor at full, three quarter and half load. l) Mechanical vibration check in accordance with NEMA MG-1, Part 7, using either elastic or rigid mount. In cases where one or more of the "full" tests are specified and there are duplicate motors, only one motor will be subjected for the specified "full" tests.
6 Preparation for Shipment	Packaging, shipping, handling and storage requirements for motors, associated with this exhibit shall be in accordance with applicable sections of the Material Requisition/Purchase Order of the primary specification.
9 Documentation and Submittals	
9.1 General	
9.1.1	For each motor supplied by the driven-equipment manufacturer, the Supplier shall furnish the following documents as per form G-321E in the primary material requisition: a) Completed motor data sheets attached to the primary material requisition. b) Dimensional Outline Drawings for motor including terminal box dimensional details and arrangement. c) Wiring diagram d) Not used e) Not used f) Installation, operation and maintenance manual g) Recommended spare parts list for one year of operation h) Not used i) Assembly drawing, if required j) Test reports as specified in the primary specification

	k) Lubricant Data - Supplier shall identify the manufacturer, grade, viscosity, applicable API standard or recommended substitutions. SDS shall be provided for the lubricant. l) Data for the gaskets or seals - Supplier to provide the shelf life and cure dates of gaskets or seals m) Not used n) Maintenance procedures

Exhibit 3

Structural Design Loads for Seismic III & IV Equipment and Tanks

Specification 24590-WTP-3PS-FB01-T0001, Rev. 6 was used to create the following exhibit. Specification change notices (SCNs) have been evaluated and there are no applicable SCNs.

1 Scope	
1.1 General	This exhibit provides structural design loads for Seismic Category III (SC-III) and Seismic Category IV (SC-IV) equipment and tanks on the River Protection Project – Waste Treatment Plant (RPP-WTP) located at the Department of Energy (DOE) Hanford Site in Richland, Washington. The seismic categories are derived from the performance categories defined in DOE-STD-1020-94 (Ref. 2.7). This specification also defines the seismic design load for SC-III qualification testing. The loads include dead, live, wind, fluid, earthquake, snow, ashfall, lateral earth pressure, operating pipe reaction, and thermal loads. This exhibit is to be used in combination with the Equipment/Tank Technical Specifications, which may include supplemental codes applicable to the specific Structure, System, or Component (SSC). In case of conflicts between this exhibit and other technical requirements in the Equipment/Tank Technical Specifications, the Seller shall identify such conflicts to the Buyer in writing and obtain resolutions documented in writing. These conflicts may also include inconsistency of load definitions, conditions and combinations as specified by the referenced codes and standards.
1.2 Definitions	EQUIPMENT: Mechanical, electrical, or control system component or element that is part of a mechanical and/or electrical system. SC-IV EQUIPMENT/TANK: Equipment/Tank required to be designed for the SC-IV loads and load combinations provided in this exhibit. This includes equipment/tank assigned SC-IV for seismic design per the facility-specific Preliminary Documented Safety Analysis (PDSA) document or Documented Safety Analysis document.
2 Applicable Documents	For the codes and standards listed below, the specific revision or effective date identified, as well as the specific revision or effective date of codes and standards that they incorporate by reference (daughter codes and standards), shall be followed. The effective dates and revisions listed in Section 2 shall apply to subsequent references to the codes and standards within this exhibit.
2.1 American Concrete Institute (ACI)	ACI 318-99 Building Code Requirements for Structural Concrete and Commentary.
2.2 American Concrete Institute (ACI)	ACI 349-01 Code Requirements for Nuclear Safety related Concrete Structures and Commentary.
2.3 American Institute of Steel Construction (AISC)	AISC M016-89 Manual of Steel Construction — Allowable Stress Design, Ninth Edition.
2.4 American Society of Civil Engineers (ASCE)	Manuals and reports on Engineering Practice; No. 78, Structural Fire Protection, ASCE 1992.
2.5 American Society of Civil Engineers (ASCE)	Minimum Design Loads for Buildings and Other Structures, ASCE 7-98.
2.6 American Society for Testing and Materials (ASTM) International	Material for steel anchor bolts, ASTM F1554 grade 36, unless specified otherwise on the design drawings.
2.7 Department of Energy (DOE)	DOE-STD-1020-94 (Including Change Notice #1 dated Jan 1996) Natural Phenomena Hazards Design and Evaluation Criteria for Department of Energy Facilities.
2.9 International Conference of Building Officials	Uniform Building code, UBC-97

(ICBO)	
2.11 ANSI American National Standards Institute (ANSI)	ANSI/AISCC N690-1994, Specification for the Design, Fabrication, and Erection of Steel Safety-Related Structures for Nuclear Facilities
2.15 American Society of Mechanical Engineers (ASME)	ASME Boiler and Pressure Vessel Code, Section II, Part D, Subpart 1 (Any edition of the code between 1995 and current edition)
3 Methodology	Methodology used in the seismic design of Seismic Category III & IV equipment and tanks shall be as defined in the Equipment/Tank Technical Specifications and the supplemental codes applicable to the SSC. For SC-IV equipment designed to UBC-97 (Ref. 2.9) Section 1632, attachments for floor or roof mounted equipment weighing less than 400 pounds need not be designed. Stainless Steel supports for Quality Level Q equipment shall be qualified using the allowable stresses from ANSI/AISC N690-1994 (Ref 2.11) and the load combinations from section 5.1 of this specification. Stainless Steel Supports for Commercial Grade (CM) equipment shall be qualified using the allowable stresses from either ANSI/AISC N690-1994 (Ref 2.11) or AISC M016-89 (Ref 2.3) and the load combinations from section 5.1 of this exhibit.
4 Design Loads	
4.3 Earthquake Loads	
4.3.1	Earthquake loads on equipment and tanks supported by structures shall be calculated per the provisions of UBC-97 (Ref 2.9), Section 1632, using the following parameters: I_p = 1.0 For SC-IV equipment tanks C_a = 0.24 a_p = 1.0 for rigidly mounted rigid* equipment = 2.5 for flexible equipment** and flexibly mounted rigid equipment = 1.0 for tanks * Rigid equipment are defined as those with a fundamental period of less than or equal to 0.06 seconds (≥17Hz). ** Flexible equipment are defined as those with a fundamental period of greater than 0.06 seconds (<17Hz). R_p = 3.0 To be used when equipment is attached directly to structural steel = 1.5*** To be used by suppliers unless otherwise specified on the Equipment/Tank Specification *** Based on actual conditions and location, Buyer's Civil, Structural, Architectural (CSA) personnel may approve an R_p of 3.0 in calculations.
4.3.2	Earthquake loads for self-supporting tanks (i.e. supported on their own foundation) shall be calculated per the provisions of UBC-97 (Ref. 2.9), Section 1634, using the following parameters: I = 1.0 for SC-IV tanks C_a = 0.24 C_v = 0.32

4.3.3	For qualification by analysis, the loads and load combinations per Section 5 of this specification shall be combined with the appropriate loads and load combinations from Equipment/Tank Specifications. Anchorage analysis of equipment must also meet the loading requirements of this specification. UBC-97 (Ref. 2.9) requires that structures, systems, and components be designed for seismic loads. Building structures and non-building structures shall be designed for the seismic forces described in UBC-97 Sections 1630 and 1634, respectively. The vertical component of earthquake ground motion may be taken as zero for Allowable Stress Design. Systems and components (equipment) shall be designed for lateral seismic forces only, as described in Section 1632. Self-supporting tanks shall be designed for lateral seismic forces as described in Section 1634. Alternatively, systems and components (equipment) may be qualified by testing, as described in Section 4.3.4
4.4 Dead Loads	Dead loads include the weight of permanent equipment/tanks as well as their Attachments.
4.6 Thermal Loads	
4.6.1 Base Temperature	The base temperature for thermal analyses shall be 70 °F. This temperature is based on recommendations from ACI 349 (Ref. 2.2).
4.6.2 Outdoor Ambient Temperatures	Unless specified otherwise in the Equipment/Tank Technical Specifications or datasheets, ambient air temperatures shall be as follows: For SC-IV equipment: 115 °F maximum, -25 °F minimum
4.6.3 Operating Temperatures (Normal and Abnormal), T_o	Operating (normal and abnormal) temperatures are provided in WTP Equipment/Tank Technical Specification. Abnormal Temperatures are due to an anticipated eight-hour loss of cooling event, which is postulated to occur once per year, and is not the result of an accident or natural phenomena hazards (NPH). Abnormal temperature thermal loads shall not be considered concurrent with earthquake (E) loads. For load combinations which include earthquake (E), T_o shall be normal operating temperature thermal loads only. For load combinations without seismic (E), T_o shall be greater of normal or abnormal operating temperature thermal loads.
4.6.5 Temperature Limitations on Structural Elements	SC-IV designed steel and stainless steel structures shall use reduced yield stress (Fy) and elastic modulus (E) in accordance with the ASCE Engineering Practice 78 (Ref. 2.4), see example provided in Appendix A.
5 Loads and Load Combinations	The following loads and load combinations are applicable to both SC-III and SC-IV equipment and tanks.
5.1 Structural Steel Design Load Combinations	For the design of equipment and tanks, the following loads shall be combined with other applicable loads, per the provisions of the Equipment/Tank Technical documents included with the Purchase Order (P.O.). A — Ashfall Loads D — Dead Loads E — Earthquake (Seismic) Loads (Due to DBE) L — Live Loads S_N — Snow Loads W — Wind Loads T_o — Thermal Loads during Normal & Abnormal Operating Conditions T_a — Thermal Loads due to Accident (DBE) Temperature P_o — Maximum or minimum differential pressure load generated by Normal or Abnormal HVAC operations P_a — Maximum or minimum differential pressure load generated by DBE S — Allowable Stress per Allowable Stress Design Method For the design of equipment/tank supports, the following service-level load combinations shall apply. Note: the 1/3 allowable stress increase discussed in UBC-97 (Ref. 2.9), Section

	1612.3.2, has been incorporated into the following combinations through the use of the 0.75 factor. No further stress increase is allowed. The following load combinations are based on Section 1612.3.2 of UBC-97 and using the Allowable Stress Design Values of AISC M016, ASD Ninth Edition (Ref. 2.3). $S = D+L+A+P_o+T_o$ $S = D+L+S_N+P_o+T_o$ $S = 0.75(D+L+W+P_o+T_o)$ $S = 0.75(D+L+S_N/2+W+P_o+T_o)$ $S = 0.75(D+L+S_N+W/2+P_o+T_o)$ $S = 0.75(D+L+P_o+T_o+E/1.4)$ $S = 0.75(0.9D+P_o+T_o \pm E/1.4)$ $S = 0.75(D+L+P_a+T_a)$ $S = 0.75(D+L+T_a+E/1.4)$ Where T_a is Due to HELB
5.1.2 Other Loads	Where other loads are to be considered in design, each applicable load shall be added to the combinations specified above per requirements of Section 1612.3.3 of UBC-97 (ref. 2.9).
5.2 Reinforced Concrete Design Load Combinations (Anchorage design)	For equipment and tanks anchorage design, the following loads shall be combined with other applicable loads, per the provisions of the Equipment/Tank Technical Specifications. A Ashfall Loads D Dead Loads E Earthquake Loads F Fluid Loads H Lateral Earth Pressure Load L Live Loads R_o Operating Pipe Reaction Load S_N Snow Loads T_o Thermal Loads during Normal & Abnormal Operating Conditions W Wind Loads T_a Thermal Loads due to Accident (DBE) Temperature P_o Maximum or minimum differential pressure load generated by Normal or Abnormal HVAC operations P_a Maximum or minimum differential pressure load generated by DBE U Required Strength per Strength Design Method The following load combinations are based on section 9.2 of ACI 318 (Ref. 2. l). $U = 1.4D+1.7L+1.7A$ $U = 1.4D+1.7L+1.7S_N$ $U = 0.75(1.4D+1.7L+1.7W)$ $U = 0.75(1.4D+1.7L+1.7S_N+1.7W)$ $U = 0.9D \pm 1.3W$ $U = 1.4D+1.7L+1.7A+1.7H$ $U = 1.4D+1.7L+1.7S_N+1.7H$ $U = 0.9D+1.7H$ $U = 1.4D+1.7L+1.7A+1.4F$ $U = 1.4D+1.7L+1.7S_N+1.4F$ $U = 0.9D+1.4F$ $U = 1.4(D+T_o)$ In addition, the following load combinations based on UBC Section 1612.2.2 shall apply.

	$U = 1.1(0.9D \pm E)$ $U = 0.75(1.4D+1.7L+1.7S_N+1.4T_a+1.4R_o)$ Where Ta is Accident (DBE) Temperature [see 4.6.4(b)] $U = D+L+S_N+F+H+T_a+R_o+E$ Where T_a is due to (HELB) [see 4.6.4(a)] $U = 0.75(1.4D+1.7L+1.4T_o+1.4P_o+1.4R_o)$ $U = 0.75(1.4D+1.7L+1.7S_N+1.4T_o+1.4P_o+1.4R_o)$ $U = 1.4(D+T_o+P_o)$ $U = 1.1(1.2D+L+0.2S_N+1.3F+1.6H+1.2T_o+1.2P_o+1.2R_o+E)$ Where T_o and P_o are the normal operating values only $U = 0.75(1.4D+1.7L+1.7S_N+1.4T_a+1.4P_a+1.4R_o)$ $U = D+L+S_N+F+H+T_a+P_a+R_o$
6 Equipment and Tank Anchorage	The Supplier shall furnish the Buyer with the following information: • Location of anchorage in relation to equipment. • Design loads on the anchorage shall be reported by individual load and load combination. • Coordinate system and sign conventions. The selected anchor bolt material for the WTP project is ASTM F1554 (Ref. 2.6). Use of other anchor bolt materials, require the approval of the Buyer.

Appendix A

Strength and Modulus Reduction for Structural Steel & Stainless Steel

The equation below is from ASCE Manuals and Reports on Engineering Practice No. 78, Structural Fire Protection, Appendix A.1.2.2 for $0^{o}C < Temperature < 600^{o}C$ ($32^{o}F < Temperature < 1112\ ^{o}F$)

For A36 Steel: Tensile yield strength, $F_y := 36 \cdot ksi$ Modulus of Elasticity, $E := 29 \cdot 10^3 \cdot ksi$

$$F_{yReduction_i} := \left[1 + \frac{\frac{5}{9}\cdot\left(Temp_i - 32\right)}{900 \cdot \ln\left[\frac{\frac{5}{9}\cdot\left(Temp_i - 32\right)}{1750}\right]}\right] \cdot F_y \qquad E_{Reduction_i} := \left[1 + \frac{\frac{5}{9}\cdot\left(Temp_i - 32\right)}{2000 \cdot \ln\left[\frac{\frac{5}{9}\cdot\left(Temp_i - 32\right)}{1100}\right]}\right] \cdot E$$

The tensile strength and modulus of elasticity of steel decrease with increasing temperature as shown below for A36 steel:

Yield Strength	Temperature ^{o}F	Modulus of Elasticity
35.2	> 150	$28.7 \cdot 10^3$
34.7	200	$28.5 \cdot 10^3$
34.2	250	$28.2 \cdot 10^3$
33.6	300	$27.9 \cdot 10^3$
32.2	400	$27.2 \cdot 10^3$
30.5	500	$26.4 \cdot 10^3$
28.6	600	$25.3 \cdot 10^3$
27.6	650	$24.7 \cdot 10^3$
26.4	700	$24 \cdot 10^3$
25.2	750	$23.3 \cdot 10^3$
23.9	800	$22.5 \cdot 10^3$
22.5	850	$21.5 \cdot 10^3$
21	900	$20.5 \cdot 10^3$
19.5	950	$19.4 \cdot 10^3$
17.8	1000	$18.1 \cdot 10^3$

$F_{yReduction} =$ ksi $Temp =$ $E_{Reduction} =$ ksi

Exhibit 4

Positive Material Identification (PMI) for Shop Fabrication

Specification 24590-WTP-3PS-G000-T0002, Rev. 9 was used to create the following exhibit. Specification change notices (SCNs) have been evaluated and there are no applicable SCNs.

1 Scope	This exhibit covers the minimum requirements for and the extent of application of Positive Material Identification (PMI) testing of shop fabricated pressure retaining equipment and piping. This exhibit applies to shop fabrication only.
3 Technical Requirements	
3.1 General	The purpose of PMI is to provide evidence that the materials are correctly supplied as specified by project documents. PMI is required for shop-fabricated items fabricated from the alloys identified in Table 1. When required by this exhibit, PMI testing will be done on each component of a pressure retaining assembly. This shall include each individual segment of pipe, each plate, and all other pieces of base materials (e.g., forgings, fittings, and tubing) and all required pressure retaining welds. For purposes of this exhibit, the following definitions are used: Alloy: Metallic materials (including welding filler materials) which contain alloying elements including but not limited to: Chromium (Cr), Nickel (Ni), Molybdenum (Mo), Copper (Cu) or Tungsten (W). 300 Series Stainless: Austenitic Stainless Steels (304L, 316L, etc.) 6 % Mo: AL6XN, 254 SMO, etc. Duplex Stainless Steel: CD4MCu, etc. Nickel Base: Alloy C-22, 625, 690, etc.
3.2 Responsibility	The Seller shall submit to the Buyer, for review and comment prior to fabrication, procedures covering how PMI will be conducted and documented. The Seller's procedures shall include the instrument manufacturer's procedures and requirements, operator qualification/re-qualification requirements, instrument calibration method(s), calibration frequency during testing, criteria for acceptance or rejection, material identification method, and record keeping.
3.3 Verification Method	
3.3.1	Instruments used for PMI shall be of the type that will provide quantitative, recordable, elemental composition results for positive identification of the alloy elements present. a) PMI shall be done per the procedures outlined by the manufacturer of the PMI instrument being used. Modification of these procedures must be approved by the Buyer. b) Each PMI instrument shall be calibrated according to the manufacturer's requirements.

3.3.2	The methods/instruments listed below are acceptable. In application, they must not be used in a "go-no-go" mode. The only acceptable objective is the positive identification, listing, and quantification of the relevant elements listed in Section 7. a) Portable X-ray fluorescence analyzers. Use is limited to the following instruments or their equivalent unless prior approval is given by the Buyer: • TN Technologies Alloy Analyzer 9266, 9277 (The Metallurgist XR) or 9288 • Outokumpu X-Met 840, or X-Met 880 • Niton Alloy Analyzer (800 Series) • Thermo Scientific Niton XL3t Analyzer • Metorex X-Met 920, X-Met 3000TA or X-Met 3000TX Metal Analyzer • Innov-X Systems XT Series Analyzer • Innov-X Systems Alpha 6500 Series Analyzer • Innov-X Systems Delta Model DP-2000, DS-2000, or DC-200 Analyzer b) Portable optical emission analyzers. Use is limited to the following instruments or their equivalent unless prior approval is given by the Buyer: • SpectroPort Model TP-07 or TFO-02 • Outokumpu ARC-MET 900 or the New Spectrotest • SpectroLab, Spectrotest and Spectrotest Jr. Any other instrument will require Buyer's approval via the submittal process. Note: Arc strikes, if any, need not be removed.
3.3.3	In lieu of using portable instruments, chemical analysis can be performed on actual material samples. Care must be exercised while collecting samples, as contamination can be contributed by the removal tools. Sample extraction shall not weaken or reduce the functionality of the component. Laboratory analysis reports shall be traceable to the individual component from which the sample was taken (See Section 6, below).
3.3.4	Parts that are too small to be tested using an alloy analyzer are exempt from PMI testing. If such exemption is claimed, the PMI procedure shall specify the minimum part size capable of being tested.
3.4 Welding Consumable Control	In addition to PMI testing required by this exhibit, the Seller shall have in place, and implement, welding consumable material control systems that can be verified by auditing. PMI of completed pressure retaining welds is required as indicated in Table 1. Production "Run Off" weld test coupons may be used for chemical analysis checks.
4 Extent of PMI	PMI shall be performed on completed equipment, or assembled parts of equipment, at such time as to ensure that only verified materials have been used in the fabrication and final assembly of components. If the assembled equipment configuration prevents PMI of any individual part, then that part shall be tested prior to assembly and be noted as such on the PMI documentation.
4.1 Vessels, Exchangers, Tanks, Filters and other Manufactured Equipment	Vessels, exchangers, and other manufactured equipment shall have PMI testing performed at the Seller's facilities. This shall include piping and components supplied as part of an equipment "package" or skid.

4.2 Shop Fabricated Piping	
4.2.1	PMI is required for all piping and piping components, circumferential pressure retaining welds, and non-autogenous longitudinal welds as indicated in Tables 1 and 2. Note that to the greatest extent possible (considering minimum size restraints of the PMI analyzer), the requirements for examining tubing are equivalent to that of piping.
4.2.2	PMI is not required on autogenous welds, fillet welds, or socket welds.
4.4 Valves and Pumps	PMI of valves and pumps is required for materials as indicated in Table 1 and piping fluid codes as indicated in Table 2.
4.5 Bulk Materials (Straight Run Piping, Fittings, Stock Valves, Etc.)	PMI is required as indicated in Table 1. Table 2 does not apply.
5 Identification	
5.1 General	All shop-fabricated items/pieces that have been successfully subjected to the required PMI shall be marked. The mark shall be durable and last through transportation and receiving inspection at the Buyer's facility. See Section 7 for items that do not pass PMI.
5.2 Marking Materials	Marking materials and adhesive tape selected shall not cause corrosion or other harmful effects. Requirements for marking materials: • The total chloride/flouride content shall not exceed 200 ppm. • The total sulfur content shall not exceed 400 ppm. • The total of low melting point metals such as lead, zinc, copper, tin, antimony, and mercury shall not exceed 1 percent; of this, mercury shall not exceed 50 ppm.
5.3 Equipment and Equipment Components	When it has been verified that the material has a composition consistent with the material specified, then it must be stamped with letters "PMIV". Use low stress stamps for identification. Items that cannot be stamped shall have an alternate system of marking. Heat exchanger tubing shall not be stamped. Any alternate system, and the items for which it will be used, must have Buyer approval. To the maximum extent possible, the stamping/marking shall be located for ease of future reference/verification.
5.4 Piping Materials	When it has been verified that the material has a composition consistent with the material specified, then a colored adhesive tape, or other approved marking method, shall be applied at one end to facilitate proper identification.
5.5 Fasteners and Small Parts	Fasteners and small parts shall be marked in accordance with the Seller's procedure using a hard marking method, an indelible ink, or paint.
6 Records of PMI	Results shall be recorded on PMI report forms, which shall indicate, as a minimum, the following for each examination: a) Name of inspector b) Date of testing c) Test method, including PMI instrument name and serial number d) Equipment tag number or pipe spool number (PO number for bulk items) for the specific piece tested e) Quantitative analysis results for relevant elements (see Section 7) A PMI map consisting of assembly and sub-assembly drawings shall be prepared for each piece of fabricated equipment or pipe spool. The map shall include components and welds and show the locations of PMI testing. An extended Shop Spool Sheet shall be provided for each individual spool number where PMI was done. In the case of bulk items, PMI results may be submitted in the form of a certificate verifying that

<table>
<tr><td></td><td>parts were tested according to the requirements of this exhibit. Results shall be reported by heat/lot and shall include the following:

a) Name of inspector
b) Date of testing
c) Test method, including PMI instrument name and serial number
d) Type and number of pieces tested
e) Acceptable composition ranges for the relevant elements (see Section 7)
f) Material identified

PMI forms shall become a part of the permanent inspection records. Seller shall submit the completed forms as part of the Final Document Package when required by the Form G-321-V in the Purchase Order.</td></tr>
<tr><td>7 Acceptance, Rejection and Retesting Requirements</td><td>All materials tested shall be identified by the PMI instrument as being consistent with the composition of the specified material. The results shall fall within the chemical composition requirements of the ASTM, AWS or other applicable material specification allowing for the accuracy of the instrument. Any questionable PMI result shall be re-analyzed by the same or another instrument, after verification of proper surface preparation. See Section 7.1, below, for materials and welds that fail to meet requirements on the second analysis.

The following elements shall be identified and recorded, even if the instrument does provide immediate identification (e.g. display of "316", "6 Mo", etc.):
<table>
<tr><td>Alloy</td><td>Elements</td></tr>
<tr><td>304, 304L</td><td>Ni, Cr</td></tr>
<tr><td>316, 316L</td><td>Ni, Cr, Mo</td></tr>
<tr><td>347</td><td>Ni, Cr, Nb</td></tr>
<tr><td>Duplex, 6% Mo, 254 SMO, AL6XN, etc.</td><td>Ni, Cr, Mo, Cu</td></tr>
<tr><td>Nickel base alloys, C-22, 625, 690, etc.</td><td>Ni, Cr, Mo, W</td></tr>
</table>

Welds joining dissimilar base materials or having filler materials that do not match the base material composition may include an allowance for dilution. Acceptable composition ranges for commonly used combinations of base material and weld filler metals are included in Table 3. Other combinations, when required, shall be identified to the Buyer for approval. Please note that the only proper use of Table 3 is for assessing dissimilar welds.</td></tr>
<tr><td>7.1</td><td>If any material, component, or weld of a type not requiring 100% testing is found to be unacceptable, all other materials, components, or welds (same heat, lot, etc.) represented by that failed item shall be considered suspect. The Buyer shall be notified immediately if a component is confirmed to have failed the PMI. The Seller will then have the following options, with Buyer concurrence:

a) Scrapping/removing all materials, components, or welds represented by the test piece (all of that heat, lot, etc.) and replacing with new components or filler metals, or
b) Performing 100 percent examination of the remainder of the represented materials, components, or welds, and replacing each item that fails the PMI check, or
c) Verifying correct chemistry by laboratory chemical analysis.</td></tr>
<tr><td>7.2</td><td>If questionable values obtained with portable analyzers are verified by laboratory analysis, the laboratory analysis data shall be used and recorded.</td></tr>
<tr><td>7.3</td><td>Any item or component containing materials that have not passed the PMI shall be clearly marked as "DO NOT USE — PMI FAILED" and segregated from the remainder of the stock.</td></tr>
</table>

Table 1 PMI Requirements for Shop Fabricated Items/Pieces

ITEM - (NOTE 1)	VERIFICATION REQUIRED
Type 304 & 304L Stainless Steel Components	No
Type 316, 316L, & 347 Stainless Steel Components	Yes – 100%
6% Mo Components	Yes – 100%
Duplex Stainless Steel Components	Yes – 100%
Nickel Base Alloy Components	Yes – 100%
Alloy Valves	Yes – 100% Body and Bonnet Only
Alloy Pumps	Yes – 100% Casing Only
Alloy Piping – including non-autogenous longitudinal welds (Spools, Fittings, Straight-Run Pipe, and Tubing)	Yes – 100% for 6 % Mo alloys and Nickel base alloys Yes – 100% for 316L, used in the fluid codes listed in Table 2
Alloy Pressure Retaining Welds	Yes – 100% of completed welds that join material required to have PMI testing
Bolting — B8M used for Pressure Retaining Connections	Yes – 5 % of total bolts, minimum one check per heat
Alloy Heat Exchanger Tubing	Yes – 5 % of total tubes, minimum one check per heat
Venturis	Yes – 100% pipes and welds

Note:
1. The following items are exempted unless specifically designated for PMI by the Purchase Order:

   a) All type 304L stainless steel components, piping, and welds
   b) Deleted
   c) Non pressure-retaining parts, such as baffles, trays, tray clips, supports, pall-rings, support rings, etc.
   d) Non pressure-retaining welds and sections of piping, such as drains, vents, overflows, etc.
   e) Gaskets
   f) Instrumentation (except when the instrument is a shop fabricated piping component placed in-line of a piping system requiring PMI)
   g) Internal instruments parts (including pressure retaining parts)
   h) Instrument tubing less than 1/2 inch in diameter
   i) HVAC ducting
   j) Piping components located within piping systems for which PMI is NOT required.

Table 2 Fluid Codes Requiring PMI Testing (Shop Fabricated Piping and Piping System Components)

Fluid Code		Fluid Code		Fluid Code	
DR	Suspect Radioactive Steam	GU	Nitric Acid Fume	GV	Vessel Vent Radioactive
HN	Nitric Acid	HR	Recovered Nitric Acid	PA	Radioactive Aqueous
PB	LAW Feed	PC	HLW Feed Slurry	PE	Entrained Solids Concentrate
PF	Cs/Tc Concentrate	PH	LAW Melter Feed	PJ	HLW Melter Feed
PP	Ultrafilter Permeate	PR	Suspect Radioactive Liquid	PS	Suspect Radioactive Slurry
PU	Suspect Radioactive Gas/Vapor	PV	Strontium Carbonate	PW	Radioactive Gas/Vapor
PX	Radioactive Slurry	PZ	Waste Feed	RK	Sodium Permanganate
ZE	Plant Wash Fluid	ZF	Plant Washings	ZH	Acidic Effluent
ZJ	Alkaline Effluent	ZL	Spent IX Resin	ZN	Neutralized Effluent
ZR	Suspect Radioactive Condensate	ZS	Process Radioactive Condensate	ZX	Special Decontaminant
ZY	Scrubber Effluent				

Table 3 Base Material and Weld Filler Metal Composition Requirements (Wt %)

MATERIAL	Cr	Ni	Mo	Cu	W	Notes
304L BM	18.0 - 20.0	8.0 - 12.0	---	---	---	
308L WFM	19.5 - 22.0	9.0 - 11.0	0.75 max	---	---	E/ER308L & LT
304L Welds	18.0 - 22.0	8.0 - 12.0	0.75 max	---	---	Note 1
304L BM	18.0 - 20.0	8.0 - 12.0	---	---	---	
316L BM	16.0 - 18.0	10.0 - 14.0	2.0 - 3.0	---	---	
316L WFM	17.0 - 20.0	11.0 - 14.0	2.0 - 3.0	---	---	E/ER316L & LT
304L/316L Welds	16.0 - 20.0	8.0 - 14.0	3.0 max	---	---	Note 1
304L BM	18.0 - 20.0	8.0 - 12.0	---	---	---	
316L BM	16.0 - 18.0	10.0 - 14.0	2.0 - 3.0	---	---	
308L WFM	19.5 - 22.0	9.0 - 11.0	0.75 max	---	---	E/ER308L & LT
304L/316L Welds	16.0 - 22.0	8.0 - 14.0	3.0 max	---	---	Note 1
304L BM	18.0 - 20.0	8.0 - 12.0	---	---	---	
308L WFM	19.5 - 22.0	9.0 - 11.0	0.75 max	---	---	E/ER308L & LT
CD4MCu BM	24.5 - 26.5	4.75 - 6.0	1.75 - 2.25	2.75 - 3.25	---	
304L/CD4MCu Welds	18.0 - 26.5	4.75 - 12.0	2.0 max	---	---	Note 1

Table 3 Base Material and Weld Filler Metal Composition Requirements (Wt %) (cont.)

MATERIAL	Cr	Ni	Mo	Cu	W	Notes
316L BM	16.0 - 18.0	10.0 - 14.0	2.0 - 3.0	---	---	
316L WFM	17.0 - 20.0	11.0 - 14.0	2.0 - 3.0	---	---	E/ER316L & LT
316L Welds	16.0 - 20.0	10.0 - 14.0	2.0 - 3.0	---	---	Note 1
316L BM	16.0 - 18.0	10.0 - 14.0	2.0 - 3.0	---	---	
316L WFM	17.0 - 20.0	11.0 - 14.0	2.0 - 3.0	---	---	E/ER316L & LT
CD4MCu BM	24.5 - 26.5	4.75 - 6.0	1.75 - 2.25	2.75 - 3.25	---	
316L/CD4MCu Welds	16.0 - 26.5	4.75 - 16.0	1.75 - 3.0	---	---	Note 1
AL6XN BM	20.0 - 22.0	23.5 - 25.5	6.0 - 7.0	0.75 max	---	
625 WFM	20.0 - 23.0	58.0 min	8.0 - 10.0	0.50 max	---	E/ERNiCrMo-3
AL6XN Welds	20.0 - 23.0	25.5 min	7.0 - 10.0	0.75 max	---	Note 2
C-22 BM	20.0 - 22.5	Remainder	12.5 - 14.5	---	2.5 - 3.5	
CD4MCu BM	24.5 - 26.5	4.75 - 6.0	1.75 - 2.25	2.75 - 3.25	---	
C-22 WFM	20.0 - 22.5	Remainder	12.5 - 14.5	0.5 max	2.5 - 3.5	E/ERNiCrMo-10
C-22/CD4MCu Welds	16.0 - 22.5	25.0 min	10.5 - 14.5	---	2.5 - 4.5	
C-22 BM	20.0 - 22.5	Remainder	12.5 - 14.5	---	2.5 - 3.5	
C-22 WFM	20.0 - 22.5	Remainder	12.5 - 14.5	0.5 max	2.5 - 3.5	E/ERNiCrMo-10
C-22 Welds	20.0 - 22.5	52.0 min	12.5 - 14.5	---	2.5 - 3.5	Note 1
Alloy 625 BM	20.0 – 23.0	58.0 min	8.0 – 10.0	---	---	
to 304L	18.0 - 20.0	8.0 - 12.0	---	---	---	
to 316L	16.0 - 18.0	10.0 - 14.0	2.0 - 3.0	---	---	
625 WFM	20.0 - 23.0	55.0 min	8.0 - 10.0	0.50 max	---	E/ERNiCrMo-3
Alloy 625 to 304L/316L Welds	19.0 – 23.0	50.0 min	8.0 min	0.50 max	---	
AL6XN (N08367) BM	20.0 - 22.0	23.5 - 25.5	6.0 - 7.0	0.75 max	---	
to 304L	18.0 - 20.0	8.0 - 12.0	---	---	---	
to 316L	16.0 - 18.0	10.0 - 14.0	2.0 - 3.0	---	---	
625 WFM	20.0 - 23.0	55.0 min	8.0 - 10.0	0.50 max	---	E/ERNiCrMo-3
N08367 to 304L/316L Welds	19.0 – 23.0	25.0 min	4.0 – 10.0	---	---	

BM = Base metal; WFM = Weld filler metal

Notes:

1. Acceptance is based on the combined base metal and WFM spec requirements.
2. Acceptance is based on WFM spec and the expected amount of dilution for molybdenum.

Exhibit 5
Instrumentation for Packaged Systems

Deleted

Exhibit 6

Low Voltage Adjustable Speed Drives (Non-Safety)

Deleted

Issued by
RPP-WTP PDC

☐ Yes ☒ No **THIS DOCUMENT CONTAINS EXPORT CONTROLLED INFORMATION, SEE BASE DOCUMENT FOR FULL LABEL AND RESTRICTIONS**

Supplier Deviation Disposition Request

PROJECT: Hanford Tank Waste Treatment and Immobilization Plant (WTP Project) **JOB No.: 24590**

FOR WTP USE		
WTP SDDR No.	Rev.	DATE RECEIVED
24590-WTP-SDDR-MS-17-00096	NA	9-25-2017

FOR SUPPLIER USE	
SUPPLIER SDDR No.	DATE SUBMITTED
N2150-SDDR-02	09/25/2017

1. Supplier Name	Address	City & State	Zip
Preferred Metal Technologies	9341 Adam Don Parkway	Woodridge, IL	60517

2. Supplier's Order No.	**3. WTP P.O. or SC**	Rev
N2150	24590-CD-POA-MA00-00001	0

4. Deviation Description (Attach extra sheets, photographs, sketches, etc. as necessary and identify quantity and serial numbers as applicable)

A transition piece will need to be added to the inlet/outlet of each blower in order to meet the requirement that the inlet/outlets be 4" diameter. Please see attached drawing for dimensional impacts.

4a. Supplier's NCR: (See instructions for applicability) Number: N/A

5. Supplier's Proposed Disposition: ☐ Use As-Is ☐ Repair ☒ Modify WTP Requirement

6. Supplier's Estimated Cost Impact: N/A **7. Supplier's Estimated Schedule Impact:** N/A

8. Proposed Disposition and Technical Justification (plus Cost/Schedule if applicable): (Attach extra sheets, sketches, etc., as necessary.)

The transition pieces are required in order to reduce the inlet/outlet dimension without having a negative impact on airflow characterisitics.

9. Supplier's Authorized Representative	Signature
Name Michael McRae	
Title	Date
Project Engineer	09/25/2017

10. WTP Engineering Action ☒ Approved ☐ Disapproved ☐ See Below

Distribution: Procurement & Subcontracts Construction

NOTES:
1. Complete instructions provided at end of form.
2. Items 1 through 9 and 15 to be completed by Supplier
3. Items 10 through 14 and 16 to be completed by WTP
4. Non applicable items to be marked "N/A"
5. Attach additional information whenever necessary
6. WTP must be notified within 5 days after detection of deviation
7. Selects "Yes", if the SDDR contains or references ECI documents.

Supplier Deviation Disposition Request
Engineering Disposition

PROJECT: Hanford Tank Waste Treatment and Immobilization Plant (WTP Project) **JOB NO.: 24590** **SDDR:** 24590-WTP-SDDR-MS-17-00096 **Rev.** N/A

Title of SDDR: Impacts of DVP Exhauster Inlet and Outlet Transition Pieces

11. WTP Procurement & Subcontracts Action: Commercial Terms Impact:

☐ Yes *This SDDR grants relief from requirements or changes the requirements and; check each (consideration) item that applies:*

- ☐ Modifications to governing terms are required and/or;
- ☐ An increase in price is requested by Seller and/or;
- ☐ A price credit from the Supplier is due and/or;
- ☐ An increase/decrease in the Seller promise delivery date is required.
- ☐ Cost impact, if any is subject to a separate approval process as required by the changes clause.

☒ No *This SDDR grants relief from requirements or changes the requirements and all of the following apply:*

- No commercial impact (No modification of governing commercial terms is required) and;
- No increase in price is requested by Seller and;
- No decrease in price is anticipated or required by Buyer and;
- No extension of promised shipment is required

12. WTP Disposition Statement (Attach extra sheets, sketches, etc., as necessary).

Layout drawing 340066-01-01, Rev. A, which was submitted with the SDDR and is Attachment 1, provides the dimensions of the transition pieces along with the outline dimensions of the Exhauster itself. The use of a size transition between the 10 inch (nom) nozzle dimensions and the 4 inch diameter flex hose requires the use of a transition piece. The transition pieces and their associated connection joints, as with the hoses, must meet ASME B31.3 requirements. The following related changes to Specification 24590-BOF-3PS-MACS-T0001 reflect additional requirements:

- Section 1.2.3 - modify the 5th bullet to say: 316/316L (with maximum carbon content of 0.030%) Stainless Steel Housing and Mounting Frame including inlet and outlet size transition pieces.
- Section 3.5.1.1 - modify the start of the wording to read: Exhauster inlets and outlets, including transition piece ends, shall be…
- Section 5.2.3 - change "…conforming to ASME B16.5 to the housing assembly…" to "…conforming to ASME B16.5 to the housing assembly or transition pieces…"
- Section 5.2.3 - 2nd paragraph - change "… joining the flange to the housing assembly…" to joining flanges to the housing assembly and transition piece.

As such, the use of transition pieces is acceptable.

However, based on the overall layout, it will be necessary for the inlet and outlet flex hoses to be shortened in length to 24 inches long. The hoses are currently required to be 36 inches long per Specification 24590-BOF-3PS-MACS-T0001, Rev. 1, Section 3.5.1.7. All other requirements associated with the hose are to remain unchanged.

Note that Attachment 1 had been submitted for supplier document review (24590-CD-POA-MA00-00001-02-00003, Rev. 00A). Detailed comments on that drawing, including several concerning the design, including changes to Note A to correct the flange design code, have been issued to the supplier as a result of that review.

This change applies to both Exhausters DVP-EXHR-00001A and DVP-EXHR-00001B, including their respective extensions/transition pieces and flex hoses.

NOTES:

1. Complete instructions provided at end of form.
2. Items 1 through 9 and 14 to be completed by Supplier.
3. Items 10 through 13 and 15 to be completed by WTP.
4. Non-applicable items to be marked "N/A."
5. Attach additional information whenever necessary.
6. WTP must be notified within 5 days after detection of deviation.
7. Select "Yes" if the SDDR contains or references ECI documents.

Supplier Deviation Disposition Request
Engineering Disposition

PROJECT: River Protection Project Waste Treatment Plant **JOB NO.: 24590** **SDDR:** 24590-WTP-SDDR-MS-17-00096 **Rev.** N/A

Title of SDDR: Impacts of DVP Exhauster Inlet and Outlet Transition Pieces

WTP Justification (Attach extra sheets, sketches, etc., as necessary).

Does SDDR request an exception/deviation from a code or standard Identified in the WTP Code of Record (24590-WTP-COR-MGT-15-00001) ☐ Yes ☒ No

WTP Justification (Attach extra sheets, sketches, etc., as necessary).

Is the change associated with a Q SSC? ☐ Yes ☒ No

Justification: The Exhauster layout with the extension/transition piece drawings has been reviewed by Plant Design and by the Piping Stress Analysis group. Attachment 2 identifies that the stress analysis review determined that the minimum flex hose length would have to be reduced along with a requirement for the addition of a 3-way support. The attachment also confirms the acceptability of the required length and support installation by Plant Design.

REQUIREMENTS REVIEW

Client Approval Required*	☐ Yes ☒ No	Interface Resolution Required*	☐ Yes ☒ No

*Address these "yes" answers in the WTP Disposition Statement (above).

Affected WTP Documents:

Document Number	Rev	Remarks	Specification Retroactive?		Incorporation by	
			Yes	No	Design Change	Reference
24590-BOF-3PS-MACS-T0001	1		☒	☐	☒	☐
			☐	☐	☐	☐
			☐	☐	☐	☐

Affected Supplier Submittals:

Document Number	Rev	Document Number	Rev
N/A			

Reference Documents:

Document Number	Rev	Document Number	Rev
N/A			

NOTES:
1. Complete instructions provided at end of form.
2. Items 1 through 9 and 14 to be completed by Supplier.
3. Items 10 through 13 and 15 to be completed by WTP.
4. Non-applicable items to be marked "N/A."
5. Attach additional information whenever necessary.
6. WTP must be notified within 5 days after detection of deviation.
7. Select "Yes" if the SDDR contains or references ECI documents.

Supplier Deviation Disposition Request
Engineering Disposition

PROJECT: Hanford Tank Waste Treatment and Immobilization Plant (WTP Project) **JOB NO.: 24590** **SDDR:** 24590-WTP-SDDR-MS-17-00096 **Rev.** N/A

Title of SDDR: Impacts of DVP Exhauster Inlet and Outlet Transition Pieces

13. WTP Disposition Approval:

	Print/Type Name	Signature	Date
RE/Originator:	Mike Silver	Originator By: Mike Silver - msilver Org Name: Placed: Oct 18, 2017	
Checker:	Tory Fogle	Checked By: Tory Fogle - tfogle Org Name: Placed: Oct 18, 2017	
Procurement & Subcontracts Representative:	Kurt Knapp	[signature]	31-OCT-17
Approver(s):	Tracy Hawkins	Reviewed No Comments By: Tracy Hawkins - trhawkin Org Name: Engineering Placed: Nov 01, 2017	
Approver(s):	Allen Kunkle	Approved By: Al Kunkle - akunkle Org Name: Placed: Nov 06, 2017	
Approver(s):	Youssef Mohammad-Zadeh	Approved By: Youssef Mohammad-Zadeh - ymohammad Org Name: NSE Placed: Nov 07, 2017	
Approver(s):	Stanley Crow	[signature]	11/7/17

Please note that source, special nuclear, and byproduct materials, as defined in the Atomic Energy Act of 1954 (AEA) are regulated at the U. S. Department of Energy (DOE) facilities exclusively by DOE acting pursuant to its AEA authority. DOE asserts that pursuant to AEA, it has sole and exclusive responsibility and authority to regulate source, special nuclear, and byproduct materials at DOE-owned nuclear facilities. Information contained herein on radionuclides is provided for process description purposes only.

NOTES:
1. Complete instructions provided at end of form.
2. Items 1 through 9 and 14 to be completed by Supplier.
3. Items 10 through 13 and 15 to be completed by WTP.
4. Non-applicable items to be marked "N/A."
5. Attach additional information whenever necessary.
6. WTP must be notified within 5 days after detection of deviation.
7. Select "Yes" if the SDDR contains or references ECI documents.

Supplier Deviation Disposition Request
Engineering Disposition

PROJECT: Hanford Tank Waste Treatment and Immobilization Plant (WTP Project) **JOB NO.: 24590** **SDDR:** 24590-WTP-SDDR-MS-17-00096 **Rev.** N/A

Title of SDDR: Impacts of DVP Exhauster Inlet and Outlet Transition Pieces

Supplier Acknowledgement:

The Supplier accepts the WTP's disposition herein and agrees to implement the WTP's disposition accordingly. Return the signed SDDR to the WTP Project Document Control (PDC).

14. Supplier			
	Print/Type Supplier Representative Name and Position	*Signature*	*Date*

WTP Supplier Quality Representative Release for Shipment:

The SQR confirms through reviewing, observing, or monitoring that the SDDR has been incorporated or implemented for the applicable material or equipment for shipment.

15. SQR			
	Print/Type Supplier Quality Representative Name and Position	*Signature*	*Date*

NOTES:
1. Complete instructions provided at end of form.
2. Items 1 through 9 and 14 to be completed by Supplier.
3. Items 10 through 13 and 15 to be completed by WTP.
4. Non-applicable items to be marked "N/A."
5. Attach additional information whenever necessary.
6. WTP must be notified within 5 days after detection of deviation.
7. Select "Yes" if the SDDR contains or references ECI documents.

24590-WTP-SDDR-MS-17-00096 CBC FAN ASSEMBLY NO.: 340066-11

ATTACHMENT 1

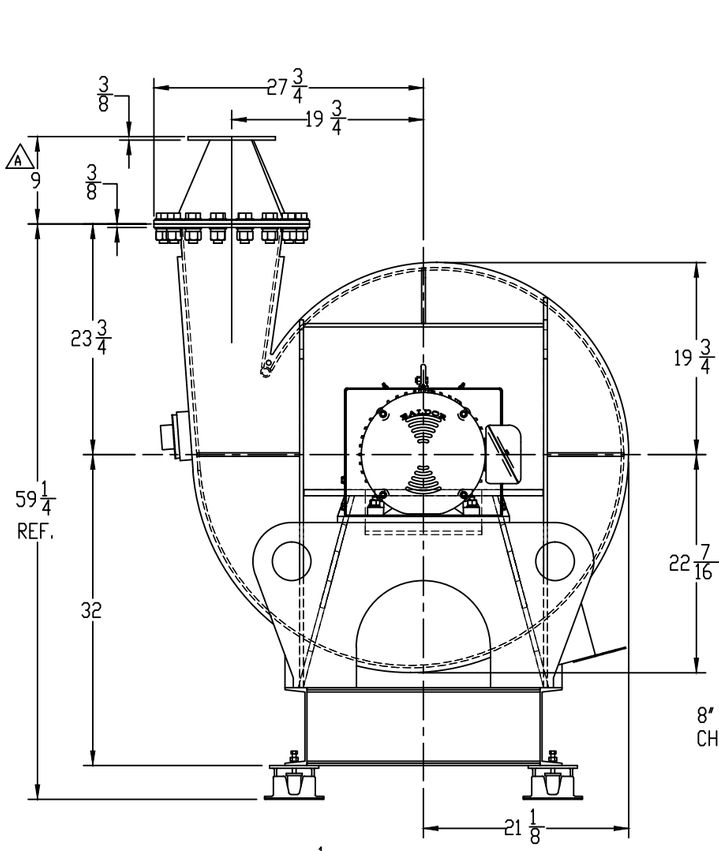

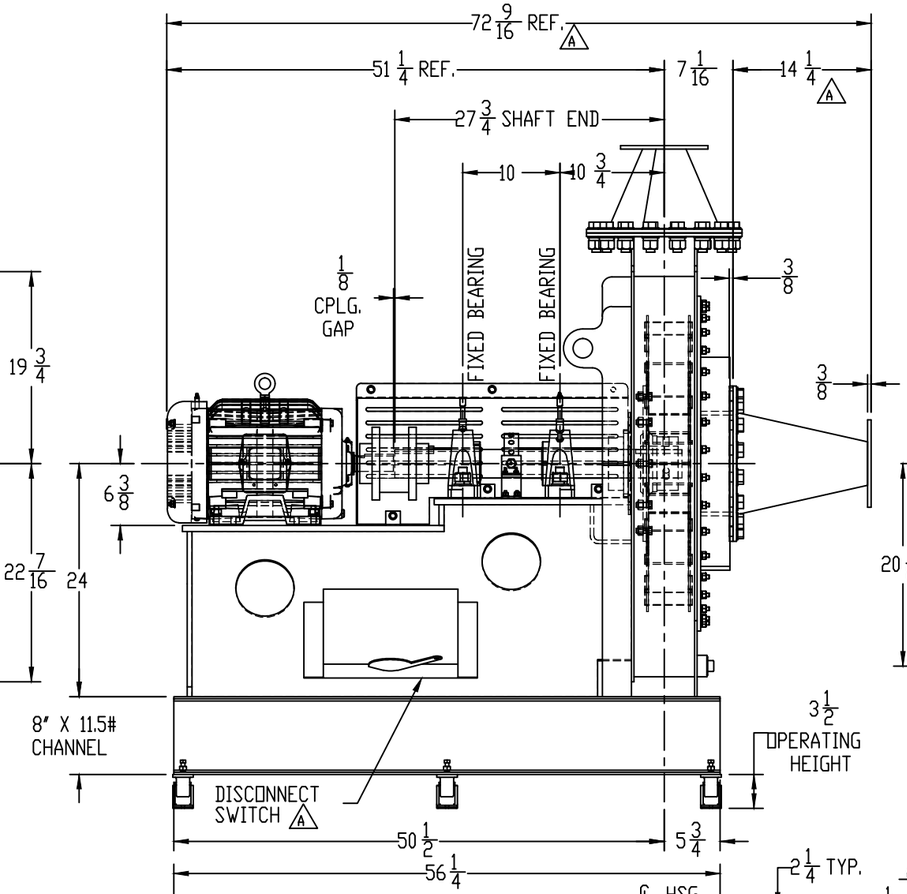

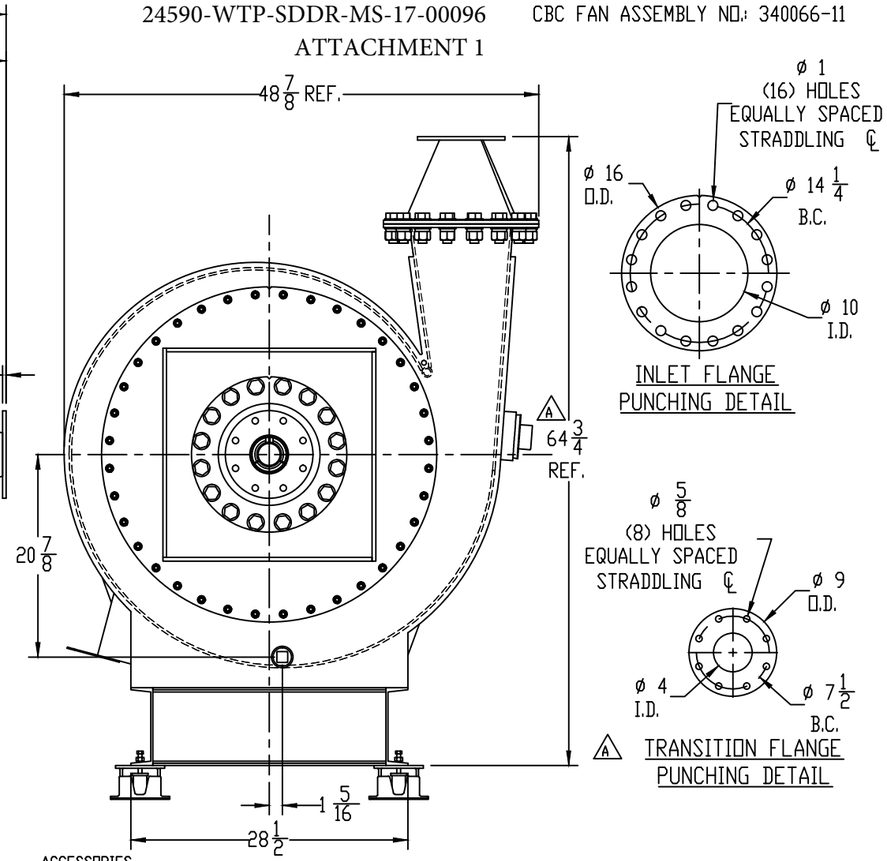

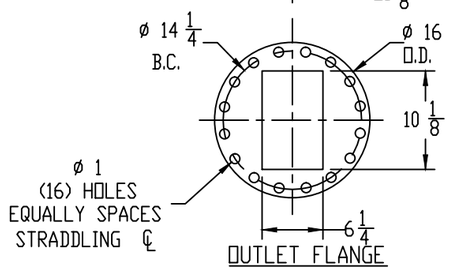

OUTLET FLANGE PUNCHING DETAIL

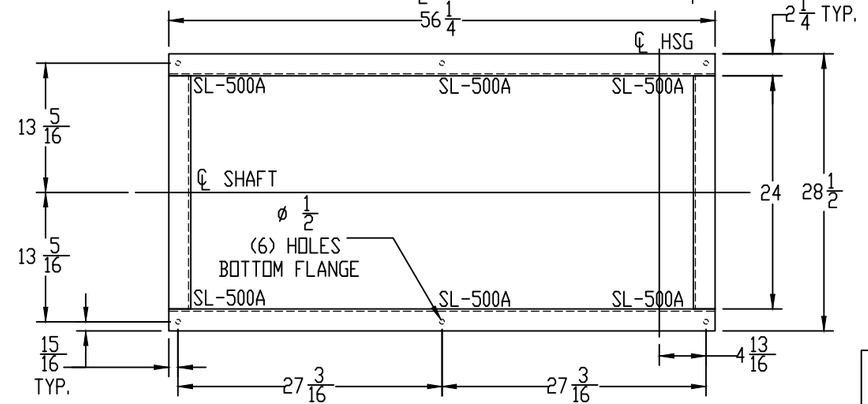

FOUNDATION PLAN

ACCESSORIES

1. PUNCHED FLANGED OUTELT
2. PUNCHED FLANGED INLET
3. AMCA B, LEAK RESISTANT CONSTRUCTION.
4. 2205 STAINLESS STEEL WHEEL WITH 316L STAINLESS STEEL HUB. WHEEL TO HAVE DYE PENETRANT TEST
5. 316(L) STAINLESS STEEL AIRSTREAM AND EXTERIOR, INCLUDING SHAFT, HOUSING & BASE, FLANGED OUTLET, FLANGED INLET/COVERPLATE, DRAIN, INSPECTION PORT, GREASE LEADS, LIFITNG LUGS, INLET SCREEN AND ALL HARDWARE.
6. 1 1/2" NPT HOUSING DRAIN WITH PLUG
7. 4" NPT INSPECTION PORT LOCATED AT 9 O'CLOCK AS VIEWED FROM THE DRIVE SIDE
8. EXTENDED GREASE FITTINGS
9. SHAFT, BEARING AND COUPLING GUARD, STANDARD STEEL CONSTRUCTION WITH PAINTED OSHA YELLOW.
10. INLET SCREEN
11. LIFTING LUGS
12. DODGE GRIP TIGHT BEARINGS
13. MOUNTING BRACKET FOR CUSTOMER SUPPLIED TECHOMETER
14. 1/4" HOUSING
15. MOUNTING OF CUSTOMER SUPPLIED HARDWARE
16. A INLET FLANGE TRANSITION
17. A OUTLET FLANGE TRANSITION

NOTES:

A. INLET AND OUTLET FLANGES NO LONGER MEET STANDARD ANSI 125/150# FLANGE PUNCHINGS DUE TO AMCA LEVEL B, LEAK RESISTANT CONSTRUCTION
B. MOTOR IS BALDOR/RELIANCE OR EQUIVALENT, PREMIUM EFFICIENCY, FOOT MOUNTED, CAST IRON FRAME, F-1 CONDUIT BOX LOCATION, AND VFD SUITABLE, FURNISHED AND MOUNTED BY CBC, FOR FURTHER DETAILS SEE TITLE BLOCK.
C. COUPLING IS FALK TYPE T STEELFLEX, T10, 1080T, WITH SET SCREWS, BORED FOR CLEARANCE FIT ON THE FOLLOWING SHAFT DIA.
   FAN SHAFT: 2.9370/2.9350 WITH 3/4 X 3/8 KEYWAY
   MOTOR SHAFT: 1.6250/1.6240 WITH 3/8 X 3/16 KEYWAY
   FURNISHED AND MOUNTED BY CBC.
D. JOHN CRANE DOUBLE LIP SHAFT SEAL, WITH 316(L) STAINLESS STEEL HOUSING. MODEL NUMBER DC-0035-293-D-316-STD. FURNISHED AND MOUNTED BY CBC.
E. 1" DEFLECTION SPRING ISOLATORS, FOR ISOLATOR SELECTION AND MODEL NUMBER SEE FOUNDATION PLAN AND CBC DWG 09-0-0007. FURNISHED BY CBC AND MOUNTED BY OTHERS.
F. ALL STATIC STEEL COMPONENTS TO BE WELDED PER D1.1 CODE WELDING. WHEEL TO BE WELDED BASED ON AWS PROCEDURES.
G. WHEEL TO BE G2.5 BALANCED.
H. DETAILS OF MATERIAL, WEIGHTS, AND COMPLETE B.O.M. ARE ON 340066-01-02 & 34006-01-03

NOTES (CONTNUED):

J. 9 X 9 SAMPLE OF EACH SHEET OF STEEL USED.
K. PROVIDE SAMPLE OF WHEEL AND HUB
L. PROVIDE THE FOLLOWING DOCUMENTATION: SAFETY DATA SHEET FOR LUBRICATION, RUN TEST PROCEDURE AND REPORT, BALANCING PROCEDURE AND REPORT, DYE PENETRANT TESTING PROCEDURES AND REPORT, INSPECTION AND TEST PLAN, WELD PROCEDURES AND INSPECION REPORTS, WELD MAPS, WELDER QUALIFICATION RECORDS, CERTIFICATE OF COMPLIANCE, AND CBC ASSEMBLY CHECKLIST.
A M. EATON DISCONNECT SWITCH, MODEL DH361FDK, NEMA 4X STAINLESS STEEL FUSIBLE DISCONNECT WITH 2 MYERS HUBS AND 4 SEAL TILE. FURNISHED AND MOUNTED BY CBC.

REV-A 09/05/17 KJH
ADDED ACCESSORY NUMBER 15 & 16 AND ADDED NOTE M

CAUTION
PRIOR TO ERECTION AND START-UP, REFER TO SERVICE MANUAL FOR INSTRUCTIONS AND SAFETY PRECAUTIONS

SCALE NONE

ALL DIMENSIONS IN INCHES
FAN SIZE 60 & BELOW +/- 1/8"
FAN SIZE ABOVE 60 +/- 1/4"

PURCHASER TO PROVIDE OPENINGS IN BUILDING OR STRUCTURE OF SUFFICIENT SIZE TO PERMIT ENTRANCE OF EQUIPMENT PARTS AS SHOWN ON THIS DRAWING. THIS DOCUMENT CONTAINS MATERIAL AND/OR INFORMATION WHICH IS THE PROPERTY OF CHICAGO BLOWER CORP AND SUPPLIED ONLY ON A CONFIDENTIAL BASIS. NO TRANSMITTAL OR DISCLOSURE SHALL BE MADE TO ANY PERSON, FIRM, OR CORPWITHOUT THE PRIOR WRITTEN APPROVAL OF CHICAGO BLOWER CORP.

TAG: P.O. 8931
1ST FAN: DVP-EXHR-0001A
1ST MOTOR: DVP-MTR-00001A
2ND FAN: DVP-EXHR-00001B
2ND MOTOR: DVP-MTR-00001B

QUANTITY OF FANS: 2

ORDER #	340066	CUST P.O. #	8931
CUST.	PREFERRED METAL TECHNOLOGY	JOB NAME	SAME AS
TAG FAN	SEE ABOVE	DESTINATION	WOODRIDGE, IL

PERFORMANCE

CFM	DV FT/MIN	SP IN W.G	RPM	BHP @ OPER. DENSITY	BHP @ .075 LB/CU-FT	TEMP Deg. F.	ALT. FEET	OPER. DENSITY LB/CU-FT	WR2 LB-FT2
200	367	50	3499	10.79		143/200	674	0.059	

MOTOR DATA

HP	RPM	CURRENT PHASE	CURRENT HERTZ	CURRENT VOLTAGE	FRAME	TYPE ENCLOSURE	SERVICE FACTOR
15	3600	3	60	230/460	254T	TEFC	1.15

CHICAGO BLOWER CORPORATION
1675 GLEN ELLYN ROAD, GLENDALE HEIGHTS, IL 60139

TITLE: CUSTOMER DRAWING (1 OF 3)
DESIGN 53, SIZE N4, A/8
CW ROT., UB DISCH.

DR.	KJH	08/14/17	DWG. NO.
CK.	AWG	08/21/17	340066-01-01
CT.			REV A

Silver, Mike

From: Trimble, Jared
Sent: Wednesday, September 13, 2017 2:05 PM
To: Silver, Mike
Cc: Trimble, Jared; Chang, Christine; Mcgrath, James P (WTP)
Subject: FW: 24590-CD-POA-MA00-00001-02-00003, Rev. 00A; DCN 1.1 Outline Drawing for DVP Exhauster ***Due 9/19/2017***

Importance: High

Mike,

In reading the email string below, 2 foot hose will work for stress and supports.

Thanks,

Jared Trimble
Bechtel NS&E | WTP Project
Plant Design | Designer
T: 509-371-8735 | E: jtrimble@bechtel.com
MAIN.01.G124.MS5-G

From: Chang, Christine
Sent: Wednesday, September 13, 2017 10:25 AM
To: Trimble, Jared <jtrimble@bechtel.com>
Cc: Mcgrath, James P (WTP) <JPMCGRAT@bechtel.com>
Subject: RE: 24590-CD-POA-MA00-00001-02-00003, Rev. 00A; DCN 1.1 Outline Drawing for DVP Exhauster ***Due 9/19/2017***

2 ft hose is fine if we can have a 3-way support next to it.

From: Trimble, Jared
Sent: Wednesday, September 13, 2017 12:09 PM
To: Chang, Christine <lchang2@Bechtel.com>
Cc: Mcgrath, James P (WTP) <JPMCGRAT@bechtel.com>; Trimble, Jared <jtrimble@bechtel.com>
Subject: FW: 24590-CD-POA-MA00-00001-02-00003, Rev. 00A; DCN 1.1 Outline Drawing for DVP Exhauster ***Due 9/19/2017***

Christine,

Please see the email string below and the attachment for the latest drawings from Mike Silver who is interfacing with the vendor on the DVP equipment. The DS only describes hose material and type length. The spec does spell out 3' length. So I told Mike that both inlet and outlet on each exhauster are ok for spacing on the transition pieces after I updated the model to the current drawing, but told him that the hoses are causing us trouble and will most likely cause you problems as well. After you and Jim had a conversation about hose length through email, you stated that you probably could go down to a 2' hose length. Is this still a possibility? I told him I would verify with you before we move forward with him contacting the vendor set hose length. Please call or email me or Jim when you have a more concrete plan for us to move forward with.

Thanks,

Jared Trimble

Bechtel NS&E | WTP Project
Plant Design | Designer
T: 509-371-8735 | E: jtrimble@bechtel.com
MAIN.01.G124.MS5-G

From: Mcgrath, James P (WTP)
Sent: Wednesday, September 13, 2017 7:49 AM
To: Trimble, Jared <jtrimble@bechtel.com>
Subject: RE: 24590-CD-POA-MA00-00001-02-00003, Rev. 00A; DCN 1.1 Outline Drawing for DVP Exhauster ***Due 9/19/2017***

Send to Christine. Let her know about the hoses

Thanks

Jim McGrath
Plant Design Layout
EGS DFLAW / HLW EGS
(509) 371-4523
E-mail is a poor communication tool for critical issues

From: Trimble, Jared
Sent: Wednesday, September 13, 2017 6:45 AM
To: Mcgrath, James P (WTP) <JPMCGRAT@bechtel.com>
Cc: Trimble, Jared <jtrimble@bechtel.com>
Subject: FW: 24590-CD-POA-MA00-00001-02-00003, Rev. 00A; DCN 1.1 Outline Drawing for DVP Exhauster ***Due 9/19/2017***
Importance: High

Jim,

I just received this from Mike Silver. More detailed info on the exhauster and finally a drawing to move forward with. I have to make a couple of modifications on each exhauster I modeled because of the transitions pieces not showing up on previous boot leg drawings until now.
Just a heads up for you. Christine will want some info on these soon I believe as well. Should I forward this too her?

Thanks,

Jared Trimble
Bechtel NS&E | WTP Project
Plant Design | Designer
T: 509-371-8735 | E: jtrimble@bechtel.com
MAIN.01.G124.MS5-G

From: WTP DFLAW Plant Design Review
Sent: Tuesday, September 12, 2017 4:23 PM
To: Trimble, Jared <jtrimble@bechtel.com>
Subject: FW: 24590-CD-POA-MA00-00001-02-00003, Rev. 00A; DCN 1.1 Outline Drawing for DVP Exhauster ***Due 9/19/2017***

For your review.

Thanks,

Shane Heintz
DFLAW Plant Design
(509)371-8734

From: Silver, Mike
Sent: Tuesday, September 12, 2017 2:02 PM
To: WTP DFLAW C&I Review <wtpdflci@Bechtel.com>; WTP DFLAW C&I Review <wtpdflci@Bechtel.com>; WTP DFLAW Electrical Review <wtpdflel@Bechtel.com>; WTP DFLAW Plant Design Review <wtpdflpd@Bechtel.com>; WTP Construction Document Review <wtpcdr@bechtel.com>
Cc: WTP ES&H <wtpesh@bechtel.com>; Mohammad-Zadeh, Youssef <ymohamma@bechtel.com>; Soltani, Mehdi <msoltani@Bechtel.com>; Singh, Jyoti <jsingh@bechtel.com>; Hall, Steven S <sshall1@Bechtel.com>
Subject: 24590-CD-POA-MA00-00001-02-00003, Rev. 00A; DCN 1.1 Outline Drawing for DVP Exhauster ***Due 9/19/2017***

Please review the attached document:

24590-CD-POA-MA00-00001-02-00003, Rev. 00A

Please provide comments and evidence of review (Electronic Stamp) by COB Monday, 9/19/17.

Note that those on cc: are sent the EDR for Info Only.

Thanks,

Mike Silver
WTP-DFLAW
Bechtel National, Inc.
Office: 703-429-6745
Email: msilver@bechtel.com

Issued by
RPP-WTP PDC

☐ Yes ☒ No **THIS DOCUMENT CONTAINS EXPORT CONTROLLED INFORMATION, SEE BASE DOCUMENT FOR FULL LABEL AND RESTRICTIONS**

Supplier Deviation Disposition Request

PROJECT: Hanford Tank Waste Treatment and Immobilization Plant (WTP Project) **JOB No.: 24590**

FOR WTP USE		
WTP SDDR No. 24590-WTP-SDDR-MS-17-00099	Rev. NA	DATE RECEIVED 10-30-2017

FOR SUPPLIER USE	
SUPPLIER SDDR No. N2150-SDDR-03	DATE SUBMITTED 10/26/2017

1. Supplier Name	Address	City & State	Zip
Preferred Metal Technologies	9341 Adam Don Parkway	Woodridge, IL	60517

2. Supplier's Order No.	**3. WTP P.O. or SC**	Rev
N2150	24590-CD-POA-MA00-00001	0

4. Deviation Description (Attach extra sheets, photographs, sketches, etc. as necessary and identify quantity and serial numbers as applicable)

Section 5.2 of specification 24590-BOF-3PS-MACS-T0001, Rev. 1, provides requirements for welding and weld inspection to be performed per ASME AG-1-1997 as well as other codes and standards that are inconsistent with the exhauster manufacturer's welding and inspection processes which are in alignment with ASME AG-1 2015. All welding and weld inspection is normally done per AWS D1.1 (carbon steel) and AWS D1.6 (stainless steel), consistent with ASME AG-1-2015. This was originally addressed within PMT exceptions matrix attached to the original proposal, prior to issuance of contract.

4a. Supplier's NCR: (See instructions for applicability) Number: N/A

5. Supplier's Proposed Disposition: ☐ Use As-Is ☐ Repair ☒ Modify WTP Requirement

6. Supplier's Estimated Cost Impact: N/A **7. Supplier's Estimated Schedule Impact:** N/A

8. Proposed Disposition and Technical Justification (plus Cost/Schedule if applicable): (Attach extra sheets, sketches, etc., as necessary.)

PMT requests that the specification Section 5.2 be revised to allow all exhauster welding and weld inspections to be performed per ASME AG-1-2015. This is consistent with how the manufacturer builds exhausters for the nuclear industry and is in alignment with the codes and standards typically applied to this type of equipment.

9. Supplier's Authorized Representative	Signature
Name: Michael McRae	
Title Project Engineer	Date 10/26/2017

10. WTP Engineering Action ☒ Approved ☐ Disapproved ☐ See Below

Distribution: Procurement & Subcontracts Construction

NOTES:
1. Complete instructions provided at end of form.
2. Items 1 through 9 and 14 to be completed by Supplier.
3. Items 10 through 13 and 15 to be completed by WTP.
4. Non-applicable items to be marked "N/A."
5. Attach additional information whenever necessary.
6. WTP must be notified within 5 days after detection of deviation.
7. Select "Yes" if the SDDR contains or references ECI documents.

Supplier Deviation Disposition Request
Engineering Disposition

PROJECT: Hanford Tank Waste Treatment and Immobilization Plant (WTP Project) **JOB NO.: 24590** **SDDR:** 24590-WTP-SDDR-MS-17-00099 **Rev.** N/A

Title of SDDR: Use of ASME AG-1-2015 for Welding and Inspection

11. WTP Procurement & Subcontracts Action: Commercial Terms Impact:

☐ Yes *This SDDR grants relief from requirements or changes the requirements and; check each (consideration) item that applies:*

- ☐ Modifications to governing terms are required and/or;
- ☐ An increase in price is requested by Seller and/or;
- ☐ A price credit from the Supplier is due and/or;
- ☐ An increase/decrease in the Seller promise delivery date is required.
- ☐ Cost impact, if any is subject to a separate approval process as required by the changes clause.

☒ No *This SDDR grants relief from requirements or changes the requirements and all of the following apply:*

- No commercial impact (No modification of governing commercial terms is required) and;
- No increase in price is requested by Seller and;
- No decrease in price is anticipated or required by Buyer and;
- No extension of promised shipment is required

12. WTP Disposition Statement (Attach extra sheets, sketches, etc., as necessary).

Engineering has determined that all DVP Exhauster welding and weld inspection requirements identified in Section 5.2 of Specification 24590-BOF-3PS-MACS-T0001, Rev. 1, may be met by the requirements of ASME AG-1-2015 in lieu of those cited in that section.

For related specification changes see the following:

- For Section 2.2.4 - See Attachment 1, Page 3 of 5
- For Sections 2.2.5, 2.2.8, 2.2.9, 2.2.10, 2.2.11, and 2.2.12 - See Attachment 1, Page 3 of 5.
- For Section 5.2.1 through 5.2.4 - See Attachment 1, Pages 4 and 5.

This disposition applies to the DVP Exhausters designated as 24590-BOF-MA-DVP-EXHR-00001A and 24590-BOF-MA-DVP-EXHR-00001B.

It is noted that while the original (pre-contract) exceptions cited in Block 4 did discuss that AWS procedures would be used for the wheel, the use of a ASME AG-1 2015 in place of ASME AG-1 1997 was not addressed.

Does SDDR request an exception/deviation from a code or standard Identified in the WTP Code of Record (24590-WTP-COR-MGT-15-00001) ☒ Yes ☐ No

Follow case-by-case exception process per 24590-WTP-3DP-G04B-00001, *Design Criteria*, prior to proceeding with SDDR -- Identify approved case-by-case exception: CBCE document number: 24590-WTP-CBCE-MS-17-00002.

WTP Justification (Attach extra sheets, sketches, etc., as necessary).

Is the change associated with a Q SSC? ☐ Yes ☒ No

NOTES:

1. Complete instructions provided at end of form.
2. Items 1 through 9 and 14 to be completed by Supplier.
3. Items 10 through 13 and 15 to be completed by WTP.
4. Non-applicable items to be marked "N/A."
5. Attach additional information whenever necessary.
6. WTP must be notified within 5 days after detection of deviation.
7. Select "Yes" if the SDDR contains or references ECI documents.

Supplier Deviation Disposition Request
Engineering Disposition

PROJECT: River Protection Project Waste Treatment Plant **JOB NO.:** 24590 **SDDR:** 24590-WTP-SDDR-MS-17-00099 **Rev.** N/A

Title of SDDR: Use of ASME AG-1-2015 for Welding and Inspection

WTP Justification (Attach extra sheets, sketches, etc., as necessary).

Justification: The AG-1 standard is an air permit requirement. The use of ASME AG-1-2015 in lieu of the current requirements in specification 24590-BOF-3PS-MACS-T0001 has been reviewed and accepted by MET (see Attachment 1, page 1) for all associated welding and NDE requirements. In specific, ASME AG-1-2015, Subsection AA-6300 calls out ASME B&PVC, Section IX, AWS D1.1, AWS D9.1, AWS D1.3, and AWS D1.6 so that calling those codes out in 24590-BOF-3PS-MACS-T0001, Rev. 1 is not required. Though AWS D14.6 "Specification for Welding of Rotating Elements of Equipment" is not found in ASME AG-1-2015, its requirements are also contained in ASME B&PVC, Section IX, AWS D1.1, and AWS D1.6.
As such, reference to other standards within the specification is no longer required. All other requirements in Specification 24590-BOF-3PS-MACS-T0001 and datasheet 24590-BOF-MAD-DVP-00001 remain applicable.

REQUIREMENTS REVIEW			
Client Approval Required*	☐ Yes ☒ No	Interface Resolution Required*	☐ Yes ☒ No
*Address these "yes" answers in the WTP Disposition Statement (above).			

Affected WTP Documents:

Document Number	Rev	Remarks	Specification Retroactive? Yes	Specification Retroactive? No	Incorporation by Design Change	Incorporation by Reference
24590-BOF-3PS-MACS-T0001	1		☒	☐	☒	☐
			☐	☐	☐	☐
			☐	☐	☐	☐

Affected Supplier Submittals:

Document Number	Rev	Document Number	Rev
N/A			

Reference Documents:

Document Number	Rev	Document Number	Rev
N/A			

NOTES:
1. Complete instructions provided at end of form.
2. Items 1 through 9 and 14 to be completed by Supplier.
3. Items 10 through 13 and 15 to be completed by WTP.
4. Non-applicable items to be marked "N/A."
5. Attach additional information whenever necessary.
6. WTP must be notified within 5 days after detection of deviation.
7. Select "Yes" if the SDDR contains or references ECI documents.

Supplier Deviation Disposition Request
Engineering Disposition

PROJECT: Hanford Tank Waste Treatment and Immobilization Plant (WTP Project) **JOB NO.:** 24590 **SDDR:** 24590-WTP-SDDR-MS-17-00099 **Rev.** N/A

Title of SDDR: Use of ASME AG-1-2015 for Welding and Inspection

13. WTP Disposition Approval:

	Print/Type Name	Signature	Date
RE/Originator:	Mike Silver	Originator By: Mike Silver - msilver Org Name: Placed: Nov 01, 2017	
Checker:	Tory Fogle	Checked By: Tory Fogle - tfogle Org Name: Placed: Nov 06, 2017	
Procurement & Subcontracts Representative:	Kurt Knapp	Kurt Knapp	20-NOV-17
Approver(s):	Tracy Hawkins	for Tracy Hawkins	20-NOV-17
Approver(s):	Allen Kunkle	Approved By: Allen Kunkle - akunkle Org Name: Beacon Placed: Nov 20, 2017	
Approver(s):	Youssef Mohammad-Zadeh	Approved By: Youssef Mohammad-Zadeh - ymohammad Org Name: NSE Placed: Nov 29, 2017	
Approver(s):	Stanley Crow	SRCrow	~~11/29/17~~ JRC 11/29/17

Please note that source, special nuclear, and byproduct materials, as defined in the Atomic Energy Act of 1954 (AEA) are regulated at the U. S. Department of Energy (DOE) facilities exclusively by DOE acting pursuant to its AEA authority. DOE asserts that pursuant to AEA, it has sole and exclusive responsibility and authority to regulate source, special nuclear, and byproduct materials at DOE-owned nuclear facilities. Information contained herein on radionuclides is provided for process description purposes only.

NOTES:
1. Complete instructions provided at end of form.
2. Items 1 through 9 and 14 to be completed by Supplier.
3. Items 10 through 13 and 15 to be completed by WTP.
4. Non-applicable items to be marked "N/A."
5. Attach additional information whenever necessary.
6. WTP must be notified within 5 days after detection of deviation.
7. Select "Yes" if the SDDR contains or references ECI documents.

Supplier Deviation Disposition Request
Engineering Disposition

PROJECT: Hanford Tank Waste Treatment and Immobilization Plant (WTP Project) **JOB NO.: 24590** **SDDR:** 24590-WTP-SDDR-MS-17-00099 **Rev.** N/A

Title of SDDR: Use of ASME AG-1-2015 for Welding and Inspection

Supplier Acknowledgement:

The Supplier accepts the WTP's disposition herein and agrees to implement the WTP's disposition accordingly. Return the signed SDDR to the WTP Project Document Control (PDC).

14. Supplier			
	Print/Type Supplier Representative Name and Position	*Signature*	*Date*

WTP Supplier Quality Representative Release for Shipment:

The SQR confirms through reviewing, observing, or monitoring that the SDDR has been incorporated or implemented for the applicable material or equipment for shipment.

15. SQR			
	Print/Type Supplier Quality Representative Name and Position	*Signature*	*Date*

NOTES:
1. Complete instructions provided at end of form.
2. Items 1 through 9 and 14 to be completed by Supplier.
3. Items 10 through 13 and 15 to be completed by WTP.
4. Non-applicable items to be marked "N/A."
5. Attach additional information whenever necessary.
6. WTP must be notified within 5 days after detection of deviation.
7. Select "Yes" if the SDDR contains or references ECI documents.

Silver, Mike

From: Saenz, Miguel
Sent: Thursday, October 26, 2017 3:10 PM
To: Singh, Jyoti; WTP MET EDR Review
Cc: Erwin, Thomas; Crow, Stanley R; Mohammad-Zadeh, Youssef
Subject: RE: Draft Welding SDDR for EMF DVP Exhauster Review

Jyoti,

For the SDDR and updated specification changes, I don't have any additional comments.

Regards,

Miguel Saenz | Welding Specialist | Materials Engineering Technology (MET)
Bechtel National, Inc. | 2435 Stevens Center, Richland, WA 99354
1.509.371.2296 office | masaenz@bechtel.com

From: Singh, Jyoti
Sent: Thursday, October 26, 2017 8:13 AM
To: WTP MET EDR Review <wtpmeter@Bechtel.com>
Cc: Erwin, Thomas <terwin@Bechtel.com>; Crow, Stanley R <SRCROW@bechtel.com>; Mohammad-Zadeh, Youssef <ymohamma@bechtel.com>; Saenz, Miguel <masaenz@Bechtel.com>
Subject: Draft Welding SDDR for EMF DVP Exhauster Review

PMT has indicated their inability to meet our specification requirement for welding and NDE for EMF DVP Exhauster. Since this order is DWP affecting, we are helping PMT with draft write up of SDDR to expedite the design. This review is in effort of a draft write-up. Miguel Saenz was present in the conference call with PMT and it's requested that he be the reviewer for this.

Miguel,

As discussed, attached is the SDDR for allowing vendor to use ASME AG-1-2015 for welding of EMF DVP Exhauster. The SDDR disposition is to changes section 5.2 of the specification to replace all other code references with ASME AG-1-2015. However, section 5.1, 5.2, 6.2 and 6.3 of the specification has additional requirements for welding and NDE test without any code references. Please review the attached marked up specification and let us know if you have any comments on the SDDR and if you think sections other than 5.2 needs to be revised to be compatible with ASME AG-1-2015. The marked-up specification shows intended changes to the specification as a result of the SDDR.

Your comment by COB today will be appreciated.

Thanks & Regards,

Jyoti Singh, P. E.

Bechtel National, Inc.
WTP DFLAW
11720 Plaza America Drive, Tower III, 9th Floor
Reston, VA 20190-4757
Ph. No. 703-429-6310

2.1 General

2.1.1 Work shall be done in accordance with the referenced codes, standards, and documents listed below, which are an integral part of this specification.

2.1.2 When specific chapters, sections, parts or paragraphs are listed following a code, industry standard or referenced document, only those chapters, sections, parts or paragraphs of the document are applicable and shall be applied.

2.1.3 For the codes and standards listed in Section 2.2, the specific edition year identified shall be followed. For the codes and standards that are incorporated by reference (daughter codes and standards), the referenced daughter edition or current edition shall be followed. If an edition is not identified, the latest issue, including addenda, at the time of the award shall apply. The edition year listed in Section 2.2 shall apply to subsequent references to the codes and standards within the specification and shall govern in case of conflict with edition years specified in the reference documents listed in Section 2.3. If more than one code, standard or reference document covers the same topic, the requirements for all must be met with the most stringent governing.

2.1.4 Deleted

2.2 Codes and Standards

2.2.1 Deleted

2.2.2 ABMA 1990, *Load Ratings and Fatigue Life for Ball Bearings.*

2.2.3 ASME B31.3-1996, *Process Piping.*

2.2.4 ASME AG-1-1997 with ASME AG-1a-2000 Addenda, *Code on Nuclear Air and Gas Treatment.* ***(ASME AG-1-2015 for welding, NDE, welding procedure specification and procedure qualification records)***

2.2.5 ~~ASME Boiler and Pressure Vessel Code, Section IX, *Qualification Standard for Welding, Brazing and Fusing Procedures, Welders, Brazers; and Welding Brazing and Fusing Operators- Welding, Brazing and Fusing Qualifications.*~~**Deleted**

2.2.6 Deleted

2.2.7 ASNT-SNT-TC-1A, *American Society of Non-Destructive Testing Recommended Practice No. SNT-TC-1A Personnel Qualification and Certification in Nondestructive Testing.*

2.2.8 ~~AWS D1.1/D1.1M, *Structural Welding Code, Steel.*~~**Deleted**

2.2.9 ~~AWS D1.3, *Structural Welding Code, Sheet Steel.*~~**Deleted**

2.2.10 ~~AWS D1.6, *Structural Welding Code. Stainless Steel.*~~**Deleted**

2.2.11 ~~AWS D9.1, *Sheet Metal Welding Code.*~~**Deleted**

2.2.12 ~~AWS D14.6, *Welding of Rotating Elements of Equipment.*~~**Deleted**

The welding of stainless steel components to galvanized or previously galvanized carbon steel is prohibited. The welding of stainless steel components to carbon steel components coated with zinc-bearing paint is also prohibited even if the coating has been removed.

5.1.13 All base metals used shall be traceable to a material test report. The material test report shall have actual test report values.

5.1.14 Weld bevels may be prepared by machining, grinding, or thermal cutting. The bevel surface shall be smooth and meet the required weld joint design. All weld bevels shall be ground / machined to bright metal prior to welding.

5.1.15 The parts to be joined by fillet welds shall be brought together as closely as practicable. The gap between faying surfaces of lap joints should not exceed 1/16 inch. If the separation is greater than 1/16 inch after straightening and assembly, the leg of the fillet weld shall be increased by the amount of separation, but the gap shall not exceed 3/16 inch. The use of filler material as shim stock is prohibited.

5.1.16 Flux, weld spatter, and slag shall be removed from each weld bead prior to depositing each succeeding pass.

5.1.17 Where full penetration joints are welded from both sides, the first pass shall be back-chipped, ground, or arc-gouged to sound metal before welding the second side. The requirement for back gouging shall be stated on the WPS.

5.1.18 Vertical welding shall be vertical-up unless otherwise approved for each specific application.

5.1.19 Care should be taken to minimize distortion during welding. Staggering and back-stepping are acceptable methods.

5.1.20 Shims and plates may be welded as detailed by the design.

5.1.21 The maximum interpass temperature shall not exceed 350 °F for austenitic stainless steels.

5.1.22 Equipment manufacturers' requirements and limitations on welding and cutting/gouging in terms of preheat/interpass temperature, heat input, technique and methods shall be followed.

5.1.23 Preheat shall be per the applicable Code unless stated otherwise.

5.1.24 The Seller shall submit the following for Buyer review and acceptance prior to use in accordance with the G-321-E:

- Welding Procedure Specifications and Procedure Qualification Records
- Shop drawings
- NDE procedures

5.2 Welding and Non-Destructive Examination (NDE) Requirements

5.2.1 Welding of the housing joints and housing to mounting platform joints shall conform to the requirements of ASME AG-1 ~~1997~~ **2015** AA-6300. Qualification of welding procedure

specifications and welder or welding operators shall be in accordance with **ASME AG-1 - 2015.**~~ASME BPVC Code Section IX or AWS D9.1.~~

Non-Destructive Examination (NDE) and inspection requirements shall be in accordance with AA-6331 and AA-6334.

a) 100% Visual Testing (VT) shall be performed on all welds. The VT acceptance criteria shall be in accordance with AA-6331.

b) 100% Liquid Penetrant Testing (PT) shall be performed in accordance with ASTM E165 and the PT acceptance criteria shall be in accordance with AA-6334.

c) Deleted

5.2.2 Welding procedure specifications to be used in the fabrication of the mounting frame and welders or welding operators performing welding of the mounting frame shall be qualified in accordance with **of ASME AG-1-2015**~~AWS D1.6~~.

NDE procedures, NDE methods, and NDE acceptance criteria shall be in accordance with ~~AWS D1.6 and the applicable ASTM standards specified in~~ **ASME AG-1-2015**~~AWS D1.6~~.

~~NDE of all fillet and groove welds (complete joint penetration or partial joint penetration) of the mounting frame weldments shall be performed using the VT and PT methods to the extent specified by AWS D1.6 Annex H.~~

5.2.3 For inlet and outlet connections, welding procedure specifications (WPSs) used to join the raised face flange ~~conforming to ASME B16.5~~ to the housing assembly (ASME AG-1) shall be qualified in accordance with the requirements of **ASME AG-1-2015**~~ASME BPVC Section IX~~. Welders and welding operators shall be qualified in accordance with **ASME AG-1-2015**~~ASME BPVC Code Section IX~~.

~~NDE of the girth and miter weld joining the flange to the housing assembly shall be in accordance with the requirements of ASME B31.3, 1996, Chapter VI for Normal Fluid Service.~~

~~Procedures for NDE shall be in accordance with the requirements of B31.3, 1996, Paragraph 343-345.~~

5.2.4 Welding procedure specifications for welding of rotating parts shall be qualified in accordance with **ASME AG-1 2015**~~ASE D14.6~~. Welders or Weld operators shall be qualified in accordance with **ASME AG-1 2015**~~AWS D14.6~~.

NDE of all fillet welds and groove welds of rotating parts (complete joint penetration and partial joint penetration) perform 100% PT and VT in accordance with **ASME AG-1-2015**~~AWS D14.6~~.

5.2.5 Repairs required as a result of weld rejection by either Buyer or Seller shall be fully documented in accordance with Seller's quality assurance (QA) program. Weld repairs shall be performed in accordance with a buyer approved WPS. Weld repair records shall include NDE reports that provide verification of defect removal and soundness of the completed weld. Weld repair records shall be included with the document page.

ISSUED BY

RPP-WTP PDC

RIVER PROTECTION PROJECT – WASTE TREATMENT PLANT

ENGINEERING SPECIFICATION

FOR

Effluent Management Facility High Efficiency Particulate Air (HEPA) Filter Housings

Content applicable to ALARA? ☒ **Yes** ☐ **No**

ADR No.
24590-BOF-ADR-M-16-0004

Rev
0

Specification changes retroactive? ☒ **Yes** ☐ **No**
☐ **N/A (alpha revision or revision 0)**

Retroactive applicability: All changes in this revision are to be incorporated by the SELLER into equipment design and fabrication for all items on the purchase order.

NOTE: Contents of this document are Dangerous Waste Permit affecting.

Quality Level

CM

DOE Contract No.
DE-AC27-01RV14136

REV	DATE	BY	CHECK	AUTHORIZATION	APPROVER *
2	2/5/2018	Originator By: Thang E. Thawn - tethawn Org Name: Bechtel Placed: Jan 31, 2018 Thang Thawn	Checked By: Jung Shin - jwshin1 Org Name: Bechtel National, Inc. Placed: Jan 31, 2018 Jung Shin	N/A	Allen Kunkle Approved By: Youssef Mohammad-Zadeh - ymohamma Org Name: NSE Placed: Feb 02, 2018 Y. Mohammad-Zadeh
1	03-01-2017	Robert Preston	Haley Hendricks	N/A	J. Leam/ Y. Mohammad-Zadeh
0	08-01-2016	Robert Preston	Erica Tiedeman/ Gerard Garcia	N/A	J. Leam/ Y. Mohammad-Zadeh

Reviewed No Comments By: Tracy Hawkins - mthawkin Org Name: Engineering Placed: Jan 31, 2018

SPECIFICATION No.
24590-BOF-3PS-MKH0-T0001

Rev
2

*The designated procedure subject matter expert (SME) for 24590-WTP-3DP-G04B-00049, *Engineering Specifications*, will concur with the retroactive determination and retroactive applicability details for all Specification Change Notices. Designated procedure SME Concurrence is documented by the initials of the SME in or by the Approval box. See CCN 263771 for details.

Revision History

Revision	Reason for Revision	Q Specification Revision Only Margin Reduced?		CM Only
		YES	NO	N/A
0	Issued for Quote	N/A	N/A	N/A
1	Issued for Purchase - Conformed to Seller's offereing - Deleted requirement to meet ASME Section VIII and associtated requirements and submittals - Change Design to accept FC type filters - Deleted Exhibits 4, 5 and 6 - Deleted all requirements from Exhibit 3 except for nozzle loads - Imposed "Pressure Decay Method" per ASME AG-1 for pressure and leak testing - Clarified shop testing - Clarified Supplier to provide filter for fit-up test -Incorporated EIE 24590-WTP-MS-16-0036; no action required since related general specification was deleted in this specification revision	☐	☒	☐
2	Issued for incorporation of Design Change Documents. Incorporated the following SCN and SDDRs: - SCN: 24590-BOF-3PN-MKH0-00001. - Modified Exhibit 7, Sections 8.21, 11.1.1, and 11.6.1 through 11.6.4 (These sections were missed during SCN 24590-BOF-3PN-MKH0-00001). - SDDR: 24590-WTP-SDDR-MS-17-00067 (modified Sections 1.2.1, 1.2.2, and 10.2.2). - SDDR: 24590-WTP-SDDR-MS-17-00087 (modified Sections 2.2.3, 6.3.5, and 10.4.7). - Modified Section 10.5.12 (ASME Sect. VIII requirements are not applicable to this order). - Modified Section 8.2.5 (Design Review of 30% completion is no longer applicable to this order). - Added Section 11 to include all Design Changes Incorporation by Reference SDDRs.	☐	☐	☒
		☐	☐	☐

Notice

Please note that source, special nuclear, and byproduct materials, as defined in the Atomic Energy Act of 1954 (AEA), are regulated at the US Department of Energy (DOE) facilities exclusively by DOE acting pursuant to its AEA authority. DOE asserts that, pursuant to the AEA, it has sole and exclusive responsibility and authority to regulate source, special nuclear, and byproduct materials at DOE-owned nuclear facilities. Information contained herein on radionuclides is provided for process description purposes only.

Contents

1 Scope 1
- 1.1 Project Description and Location 1
- 1.2 Equipment, Material, and Services Required 1
- 1.3 Work by Others 1
- 1.4 Acronyms, Abbreviations, and Definitions 2
- 1.5 Safety/Quality Classifications 4

2 Applicable Documents 4
- 2.1 General 4
- 2.2 Codes and Standards 5
- 2.3 Reference Documents/Drawings 5
- 2.4 Informational Reference Documents 6

3 Design Requirements 6
- 3.1 Basic Function 6
- 3.2 Performance 6
- 3.3 Design Conditions 6
- 3.4 Design 7
- 3.5 Accessibility and Maintenance 8

4 Materials 8
- 4.1 Housing Material 8
- 4.2 Prohibited Materials 9

5 Fabrication 9
- 5.1 General 9
- 5.2 Welding 9

6 Tests and Inspections 10
- 6.1 General 10
- 6.2 Housings 10
- 6.3 Shop Tests 11

7 Preparation for Shipment 11
- 7.1 General 11
- 7.2 Cleanliness 11
- 7.3 Tagging 11
- 7.4 Packaging 11
- 7.5 Documentation 12

8 Quality Assurance (QA) 12

8.1 QA Requirements Specific to Item(s) or Service 12
8.2 Additional Requirements 12
9 Configuration Management 12
10 Documentation and Submittals 13
10.1 General 13
10.2 Drawings 13
10.3 Deleted 14
10.4 Procedures 14
10.5 Inspection and Test Reports 14
10.6 Calculations 15
10.7 Manuals 16
10.8 Certificates of Compliance 16
10.9 Schedules 16
10.10 Product Data 16
10.11 Seismic Analysis 17
11 Design Change Incorporated by Reference 17

Exhibit 1: Structural Design Loads for Seismic Category III & IV Equipment and Tanks ..... Exhibit 1, Page 1
Exhibit 2: Positive Material Identification (PMI) for Shop Fabrication ..... Exhibit 2, Page 1
Exhibit 3: Minimum Allowable Nozzle Loads ..... Exhibit 3, Page 1
Exhibit 4: Deleted ..... Exhibit 4, Page 1
Exhibit 5: Deleted ..... Exhibit 5, Page 1
Exhibit 6: Deleted ..... Exhibit 6, Page 1
Exhibit 7: Welding of Structural Stainless Steel and Welding of Structural Carbon Steel to Structural Stainless Steel ..... Exhibit 7, Page 1
Exhibit 8: Deleted.

1 Scope

1.1 Project Description and Location

The Office of River Protection (ORP) and its contractors manage 177 underground radioactive waste storage tanks at the Hanford Site in Washington. These tanks contain approximately 56 million US gallons of radioactive waste. Bechtel National, Inc. (BNI) has entered into contract with the US Department of Energy to design, construct, and commission the Hanford Tank Waste Treatment and Immobilization Plant (WTP) to process and vitrify this waste into a stable form that is suitable for permanent storage and disposal. The WTP will be constructed in the 200 East Area of the Hanford Site, near Richland, Washington. The main facilities within the WTP complex will be the Pretreatment facility (PTF), Low-Activity Waste facility (LAW), High-Level Waste facility (HLW), Balance of Facilities (BOF), Analytical Laboratory (Lab), and the Effluent Management Facility (EMF).

1.2 Equipment, Material, and Services Required

This specification, combined with the applicable Mechanical Data Sheet (MDS) in Part 2 of the Material Requisition (MR), project specifications, and purchase order documentation, defines the minimum requirements for the design, dimensional requirements, materials of construction, testing and documentation of High Efficiency Particulate Air (HEPA) Filter Housings for the Vessel Vent System in the Effluent Management Facility.

Seller shall design, furnish materials, fabricate, and test HEPA filter housings and accessories in accordance ASME AG-1 including:

1.2.1 DVP Primary Exhaust HEPA Filter Housings shall include, but not be limited to the following:

- Housing/mounting frame
- Weld end inlet and outlet nozzles with static pressure taps
- DOP (dioctylphthalate) test ports

1.2.2 DVP Secondary Exhaust HEPA Filter Housings shall include, but not be limited to the following:

- Housing/mounting frame
- Weld end inlet and outlet nozzles with static pressure taps
- DOP (dioctylphthalate) test ports

1.2.3 Deleted

1.3 Work by Others

1.3.1 Shipping, material unloading and storage at the Hanford Site.

1.3.2 Installation labor.

1.3.3 Piping external to the filter housing.

1.3.4 Instrumentation (unless otherwise specified on the MDS).

1.3.5 HEPA filters for the filter housing (except for fit up and bag-in/bag-out test – see 6.3.5).

1.3.6 Site testing

1.4 Acronyms, Abbreviations, and Definitions

1.4.1 Acronyms and Abbreviations

ACGIH	American Conference of Governmental Industrial Hygienists
AISC	American Institute of Steel Construction
ALARA	As Low As Reasonably Achievable
ANSI	American National Standards Institute
ASNT	American Society of Nondestructive Testing
ASHRAE	American Society of Heating, Refrigerating and Air-Conditioning Engineers
ASME	American Society of Mechanical Engineers
ASTM	American Society for Testing and Materials
AWS	American Welding Society
CM	Commercial Material
DEP	Direct Feed LAW Effluent Management Facility Process System
DOE	US Department of Energy
DVP	Direct Feed LAW Effluent Management Facility Vessel Vent Process System
EMF	Effluent Management Facility
HEPA	High Efficiency Particulate Air
ISRS	In-Structure Response Spectra
MDS	Mechanical Data Sheet
MR	Material Requisition
MTR	Material Test Report
NPT	National Pipe Thread
PFA	PerFluoroAlkoxy
PMI	Positive Material Identification
QA	Quality Assurance
QAP	Quality Assurance Program
RPP	River Protection Project
SC	Seismic Category (SC-I, SC-II, SC-III or SC-IV)
SCFM	Standard Cubic Feet per Minute
SDDR	Supplier Deviation Disposition Request
SOPT	System Operational Pressure Transient
SSC	Structure, System, or Component
UL	Underwriters Laboratories, Inc.
WC	Water Column

1.4.2 Definitions

Aerosol: A stable suspension of particles, solid or liquid in air.

ALARA: An acronym for "As Low as Reasonably Achievable" with regard to occupational exposure to radiation or radioactive materials, is a concept for achieving the most cost effective protection below regulatory standards.

Bypass: A pathway through which contaminated air can escape treatment by the installed HEPA filters through leaks in filters, mounting frames, dampers, valves and unsealed penetrations from electrical conduits, pipes, floor drains, etc.

C3 Areas: C3 are the process areas where the potential for direct contact with radioactive material and/or contaminated systems and components exist. These areas include maintenance shops, laboratory fume hoods, cask handling areas, sampling suites, 'contact' areas where breaking of containment is possible.

Challenge Aerosol: Polydisperse droplets used as a challenge aerosol for testing HEPA filter banks for leaks. The polydisperse aerosol used for leak detection of systems differs in size from the 0.3 micrometer monodisperse DOP aerosol used for the efficiency testing HEPA filters by manufacturers.

HEPA Filter: High Efficiency Particulate Air Filter having a glass fiber medium with a particle removal efficiency of 99.97% when tested with an essentially monodisperse 0.3 micrometer test aerosol.

Maximum Operating Pressure: The maximum static pressure to which the air cleaning units and components will be subjected and still be required to continue its function. Static pressure resulting from off-normal operating conditions which do not render the system inoperable shall be considered as maximum operating pressure. The maximum operating pressure shall equal or exceed the normal operating pressure and may be equal to the maximum design pressure but may not exceed it.

Mounting Frame: A structure against which filters may be mounted and supported in a position that provides a surface to seat the sealing gasket, thereby avoiding a potential bypass or leakage path for unfiltered air.

Pressure, Leak Test: The static pressure, acting in the direction of the operating pressure (positive or negative), used for establishing leakage rates. This pressure usually exceeds the maximum operating pressure of the item being tested, but does not exceed structural capability pressure.

Normal Operating Pressure Differential (housing) (NOPDh): The maximum pressure differential between inside the housing and external to the housing that may occur during normal plant operation, including plant startup and test conditions; included are pressures resulting from normal airflow and damper or valve closure.

R3: Radiation classification for areas with a target dose equivalent rate of less than 2.5 mrem/hr. Entry only to carry out prescribed tasks accordance with normal procedure and a Radiation Work Permit. TLD and Rad Worker training required for entry into Radiation Areas.

Safe Change Housing: Safe change implies that HEPA filters included with the housing can be manually changed by an operator without remote equipment.

Structural Capability Pressure: The pressure to which the designer specifies the component or system can be safely operated without permanent distortion.

System Operational Pressure Transient (SOPT): Overpressure transient loads due to events such as rapid damper and valve closure, or other normal loads that result in a short duration pressure differential.

Train: A set of components arranged in a series. For example, a two-stage HEPA filtration train may be comprised of an isolation damper, a HEPA filter housing, another HEPA filter housing, and finally a second isolation damper, all in series.

Water Column (WC): The units for air pressure typically expressed in inches of water column height (e.g., 2.5 inches WC).

1.5 Safety/Quality Classifications

Safety Classification (i.e., Safety Class, Safety Significant or Non-Safety), Quality Level (i.e., Q or CM) and Seismic Category (i.e., SC-I, SC-II, SC-III or SC-IV) of equipment described in this specification are noted on the MDS attached to the MR.

1.5.1 The EMF and associated ventilation system is classified as Non-Safety.

1.5.2 The EMF and associated ventilation components shall be designed as Seismic Category IV (SC-IV).

1.5.3 Refer to individual MDS and Section 8 of this specification for quality assurance requirements.

2 Applicable Documents

2.1 General

2.1.1 Work shall be performed in accordance with the referenced codes, standards, and documents listed below and the exhibits which are an integral part of this specification.

2.1.2 When specific chapters, sections, parts or paragraphs are listed following a code, industry standard or referenced document (including exhibits), only those chapters, sections, parts or paragraphs of the document are applicable and shall be applied.

2.1.3 For the codes and standards listed below, the specific edition year identified shall be followed. For the codes and standards that are incorporated by reference (daughter codes and standards) the referenced daughter edition or current edition shall be followed. If an edition year is not identified, the latest issue, including addenda, at the time of award shall apply.

2.1.4 In case of conflict between this specification and referenced codes and standards, the requirements for all must be met with the most stringent governing.

2.2 Codes and Standards

2.2.1 ACGIH- American Conference of Governmental Industrial Hygienists, *Industrial Ventilation: A Manual of Recommended Practice, 20th Edition.*

2.2.2 ASME B18.2.1, *Square, Hex Heavy Hex, and Askew Head Bolts and Hex, Heavy Hex, Hex Flange, Lobed Head, and Lag Screws (Inch Series)*

2.2.3 ASME AG-1-2003 with AG-1b-2007 Addenda, Sections AA, CA, FC, HA and TA, *Code on Nuclear Air and Gas Treatment*. ASME AG-1-2009 may be applied only for HEPA Filters used in the testing of the housings.

2.2.4 ASME N509-2002, *Nuclear Power Plant Air-Cleaning Units and Components* (where invoked as a daughter standard in ASME AG-1)

2.2.5 Deleted

2.2.6 ASME Boiler and Pressure Vessel Code, Section IX, *Qualification Standard for Welding, Brazing and Fusing Procedures; Welders; Brazers; and Welding, Brazing and Fusing Operators*

2.2.7 SNT-TC-1A, *Recommended Practice, Personnel Qualification and Certification in Nondestructive Testing*. Personnel must be qualified to a "Written Practice" (or procedure) meeting the requirements of this recommended practice. This "Written Practice" must meet all the requirements from anyone given edition of SNT-TC-1A (and its applicable supplements as follows: 1988, 1992, 1996, 2001 and 2006. Only the SNT-TC-1A edition selected and its applicable supplements shall be used in the "Written Practice" and that edition shall be met in its entirety (Except as shown below). Combining SNT-TC-1A contents from one edition year with another is prohibited, except as follows:

- If the 1988, 1992, or 1996 Editions are utilized, the additional requirements for periodic technical performance evaluation and documentation found in paragraphs 10.2 and 12.1 of the 2006 edition shall also be met.

Recertification interval for Level III nondestructive examination personnel shall not exceed five years.

2.2.8 AWS D1.1/D1.1M, *Structural Welding Code - Steel*.

2.2.9 AWS D1.3, *Structural Welding Code - Sheet Steel*.

2.2.10 AWS D1.6, *Structural Welding Code - Stainless Steel*

2.2.11 AWS D9.1, *Sheet Metal Welding Code*.

2.3 Reference Documents/Drawings

2.3.1 24590-WTP-3PS-G000-T0003, *Engineering Specification for Packaging, Handling, and Storage Requirements*.

2.3.2 24590-WTP-3PS-G000-T0014, *Engineering Specification for Supplier Design Analysis.*

2.3.3 24590-WTP-MV-M59T-00001, *Pressure Vessel Tolerances Standard Details*

2.3.4 24590-WTP-LIST-ESH-16-0001*, Restricted Materials List*

2.4 Informational Reference Documents

The following codes and standards are not specifically invoked on the RPP-WTP Project, but were used to the extent referenced herein and/or by ASME AG-1 as a source of information in development of technical and performance requirements.

2.4.1 DOE-HDBK-1169-2003, *DOE Nuclear Air Cleaning Handbook*

3 Design Requirements

3.1 Basic Function

3.1.1 This specification provides general requirements for HEPA filter housings to be installed in ASME AG-1 compliant systems. Mechanical Data Sheets (MDS) are used to convey specific design and performance attributes of these components as required to meet unique facility system applications.

3.1.2 HEPA filter housing shall be designed to accept HEPA filters designed in accordance with ASME AG-1, Section FC, size 9 filters.

3.1.3 DVP Primary and Secondary Exhaust HEPA filter shall filter air from the various DEP process vessels before release to atmosphere.

3.2 Performance

3.2.1 Resistance to Airflow The pressure drop across the complete Housing/Filter assembly with a dirty filter shall not exceed 4” WC at design flow.

3.2.2 Pressure Boundary Leakage (HA-5300, HA-5400) For all filter housings, the leak rate acceptance criteria for Supplier shop pressure boundary leakage testing shall be 0.0005 cfm per cubic foot of test volume at the leak test pressure specified in the MDS.

3.2.3 Structural Capability (HA-5500) The HEPA Filter Housings shall be structurally designed to withstand the maximum pressure differential, which may be experienced due to normal operating pressure, test pressure or transient pressure conditions due to a rapid closure of valves. When subject to the structural capability pressure the housing shall not exhibit unacceptable distortion or breach of integrity. Design pressure criteria shall be specified on the MDS.

3.3 Design Conditions

3.3.1 Limiting Dimensions: Reference the MDS for limiting dimensions of the filter housing. Modifications to these dimensions may be proposed by the Supplier via the SDDR process.

3.3.2 Storage Conditions: Housings may be stored outdoors at ambient extreme temperatures ranging from -23°F to 113°F dry bulb and relative humidity ranging from 5 to 100%.

3.3.3 Environmental Conditions: Reference the MDS for housing internal design environmental conditions. Conditions indicated on the MDS include but are not limited to inlet air temperatures, chemical exposure and radiological dose levels. Housings will be installed in WTP C2 areas maintained between 59°F dry bulb and 95°F dry bulb.

3.3.4 Stress Criteria: Allowable stresses shall be per ASME AG-1 HA-4220.

3.3.5 Deflection Criteria: Deflection limits shall not exceed those identified in ASME AG-1 AA-4230. Alternatively, as stated in AA-4231, a test may be used to verify the housing deflection, while being subject to all applicable loads, does not impair the housing function. The Seller shall specify the method(s) selected to meet this AG-1 requirement.

3.3.6 Housing Design Pressures: The following design pressure criteria are provided on the MDS for housing design and testing: Normal Operating Pressure Differential (component (NOPDc) and housing (NOPDh), defined in AA-4211 and HA-4211), System Operational Pressure Transient (SOPT), Maximum Operating Pressure (defined in SA-1000 and TA-1130), Maximum Design Pressure (defined in SA-1130), Leak Test Pressure (SA-1000 and referred Appendix TA-III) and Structural Capability Pressure (defined in TA-1130). Unless otherwise specified on the MDS the following assumptions shall be made:

1) As identified in HA-4211, if SOPT is not specified on the MDS, it may be considered enveloped with the Maximum Design Pressure.
2) The Maximum Operating Pressure may be assumed equal to the Maximum Design Pressure.
3) The Structural Capability Pressure shall be assumed to be 1.25 times greater than the Maximum Design Pressure.

3.3.7 ASME AG-1 Service Limits: No Service Limits are designated by this Specification (Reference ASME AG-1 Article AA-4214). Service Levels, as defined in Table HA-4212, are referred in this specification only for identification of relevant load combinations and stress criteria.

3.4 Design

3.4.1 Housings shall conform to ASME AG-1, Article HA-4000 and have a design pressure rating of 15 psig.

3.4.2 The Housing shall be designed for a minimum of 40 years of service excluding consumables (gaskets, filter elements, etc.).

3.4.3 Housings shall incorporate the design features as specified in the MDS. The Mounting Frame shall accommodate a ASME AG-1, Section FC, Size 9 filter gasket.

3.4.4 The filter housing shall be designed to allow operator change out of filters without the operator coming in contact with the particulate captured by the filter media, i.e. support a bag in/out filter replacement. Seller shall provide a change-out bag procedure for Buyer's review and acceptance.

3.4.5 Housing supports (legs, saddles, etc.) shall be provided if the housing cannot be supported by its inlet and outlet connections.

3.4.6 The housing and supports shall be capable of resisting the loads imposed during the shipment, installation, testing and operation, without exceeding allowable stresses and deflection.

3.4.7 Static pressure taps, when required by the MDS, shall be ½ inch NPT stainless steel half-couplings with stainless steel hex plugs.

3.4.8 DOP test connections shall be provided. All test connections shall be stainless steel and include closure plugs.

3.4.9 If specified on the MDS, filter housings shall be provided with drains and drain valves.

3.4.10 Lifting lugs shall be installed on housings for safe, balanced lifting and handling. Refer to 24590-WTP-3PS-G000-T0003, *Engineering Specification for Packaging, Handling, and Storage Requirements*.

3.4.11 Housing nozzles shall be qualified using Exhibit 3, *Minimum Nozzle Design Loads*.

3.5 Accessibility and Maintenance

3.5.1 Seller shall indicate on equipment drawings or in installation and maintenance manual accessibility requirements for replacement of the filters within the filter housings.

3.5.2 Deleted

4 Materials

4.1 Housing Material

4.1.1 The certification of material requirements shall be in accordance with ASME AG-1 HA-3300. The Supplier shall provide copies to the Buyer of documents needed to meet these requirements.

4.1.2 Materials that are part of the pressure boundary or equipment support shall meet the structural requirements of ASME-AG-1, Article HA-4000.

4.1.3 Filter Housings and Housing supports shall be as specified in ASME AG-1, Section HA-3100 and HA-3200.

4.1.4 The housing shall be constructed of the material specified on the MDS. Protective coatings are not required for stainless steel (HA-3111). The Supplier shall not apply special protective coatings to any housing surfaces without acceptance from the Buyer.

4.1.5 All materials used in the manufacture of equipment under this Section shall be new and unused. Materials with defects shall be repaired in accordance with ASME AG-1, Article AA-8000 prior to use.

4.1.6 Specific service conditions for each Housing type shall be indicated on the completed MDS. The Supplier shall provide materials suitable for these specific service conditions, appropriate for the service and consistent with ASME AG-1.

4.1.7 Avoid dissimilar metal couples as required to avoid galvanic corrosion.

4.1.8 Materials shall be tested for Positive Material Identification in accordance with Exhibit 2, *Positive Material Identification (PMI) for Shop Fabrication*.

4.1.9 The use of PFA Cap for filter change out is allowed.

4.2 Prohibited Materials

4.2.1 For materials in contact with stainless steel, the following shall apply: Low melting point metals (i.e., lead, zinc, tin, antimony, cadmium and mercury) shall not exceed 1% by weight, with mercury not exceeding 50 ppm. Halides shall not exceed 200 ppm. This prohibition applies to the use of tools, fixtures, paints, coatings, sealing compounds and any other equipment or materials used by the Supplier during handling, assembly and storage of the stainless steel components. Mercury, lead, aluminum, zinc, their alloys, or materials containing such metals as their basic constituents shall not be used in the construction of the housings. Teflon shall not be used in the construction of the housings.

4.2.2 Asbestos shall not be included in any component of the housings.

4.2.3 The materials listed in 24590-WTP-LIST-ESH-16-0001*, Restricted Materials List*, shall not be used in any supplied equipment and shall not be brought onto the WTP site.

5 Fabrication

5.1 General

5.1.1 Fabrication of housings shall conform to the requirements of ASME AG-1 Article AA-6000.

5.1.2 Deleted

5.2 Welding

5.2.1 All housings, housing supports and filter mountings welding, non-destructive examinations (NDE) and inspections including weld repairs shall conform to the following as applicable:

- ASME AG-1 Article AA-6000
- AWS D1.1, *Structural Welding Code - Steel*
- AWS D1.3, *Structural Welding Code - Sheet Steel*
- AWS D1.6, *Structural Welding Code - Stainless Steel*
- AWS D9.1, *Sheet Metal Welding Code*

- Exhibit 7, *Welding of Structural Stainless Steel and Welding of Structural Carbon Steel to Structural Stainless Steel*
- ASME Boiler and Pressure Vessel Code, Section IX, *Qualification Standard for Welding, Brazing and Fusing Procedures; Welders; Brazers; and Welding, Brazing and Fusing Operators*

5.2.2 Personnel performing weld inspections shall be qualified in accordance with ASME AG-1, Article AA-6335 or Exhibit 7, *Welding of Structural Stainless Steel and Welding of Structural Carbon Steel to Structural Stainless Steel,* Section 11.1.2, as applicable.

5.2.3 Repairs required as a result of weld rejection by Supplier's final inspection shall be fully documented in accordance with Supplier's Quality Assurance Program and performed in accordance with ASME AG-1, Article AA-6300 or Exhibit 7, *Welding of Structural Stainless Steel and Welding of Structural Carbon Steel to Structural Stainless Steel* as applicable. Weld repair records shall be included with Supplier's document package (Section 10.5.5).

5.2.4 Welding procedures and procedure qualification records, non-destructive examination procedures and inspection procedures shall be submitted to the Buyer for review and permission to proceed prior to start of fabrication. Each procedure shall be prepared and qualified in accordance with the requirements of the above listed standards, exhibits and ASME Section IX, as applicable.

5.2.5 Joints and seams shall be in accordance with ASME AG-1, Article HA-4320.

6 Tests and Inspections

6.1 General

6.1.1 The Supplier shall conduct and be responsible for the shop tests called for in this specification, in applicable standards and referenced documents. The Supplier shall furnish all equipment, instrumentation, personnel and facilities for the performance of all shop tests.

6.2 Housings

6.2.1 Tests and inspection of the filter housings shall conform to ASME AG-1, Article HA-5000 with additional test and inspection requirements as required by this specification.

6.2.2 The Supplier shall develop written inspection or testing procedures as required by ASME AG-1, Article HA-5120.

6.2.3 All instruments used in the shop tests shall be in calibration. Instrument accuracy shall meet or exceed the requirements of ASME AG-1, Article TA-3000 and Table TA-3000-1.

6.2.4 All instruments used in the conduction of shop tests shall meet the specified requirements of ASME AG-1, Articles TA-3110, TA-3120, TA -3130 and TA-3142.

6.2.5 The inspection and testing shall be performed by personnel qualified in accordance with SNT-TC-1A and ASME AG-1, Article AA-6433 as required by HA-5120.

6.2.6 The Supplier shall submit the qualifying procedures for Buyer Review. Supplier's inspection test personnel records shall be made available for Buyer review at Seller shop.

6.3 Shop Tests

6.3.1 The following shop test of the housing shall be performed in accordance with the requirements of ASME AG-1, Article AA-5000 and other Code sections for specific testing requirements:

- Pressure boundary leak test (ASME AG-1, Article HA-5300)
- Mounting frame to housing leakage test (ASME AG-1, Article 5400)
- Structural capability test (ASME AG-1, Article HA-5500)
- Fit up of filter to filter housing

6.3.2 The Seller shall submit the proposed test program/procedures to the Buyer for review and acceptance prior to conducting any testing.

6.3.3 Seller shall also perform at shop test to demonstrate/prove the bag-in/bag-out concept that is incorporated in to the housing design.

6.3.4 Pressure and leakage tests shall be performed by the "Pressure Decay Method" in accordance with ASME AG-1 Mandatory Appendix TA-III, Duct and Housing Leak Test Procedural Guidelines.

6.3.5 The Seller shall furnish, as needed, standard FC Size 9 filters for the fit up and bag-in/bag-out tests. Refer to Section 2.2.3 for test filter Code requirements.

7 Preparation for Shipment

7.1 General

All Filter Housings shall be packaged, prepared for shipment, handled and stored in accordance with ASME AG-1, Article HA-7000, and 24590-WTP-3PS-G000-T0003, *Engineering Specification for Packaging, Handling, and Storage Requirements*.

7.2 Cleanliness

Remove all dirt, oil, grease, loose mill scale, weld spatter and other foreign matter.

7.3 Tagging

Tagging of the Filter Housings shall be as specified in ASME AG-1, Article HA-9000. Plant item numbers for the housing shall be per the MDS that are in Part 2 of the MR.

7.4 Packaging

Packaging shall be in accordance with 24590-WTP-3PS-G000-T0003, *Engineering Specification for Packaging, Handling, and Storage Requirements* and the manufacturer's procedures.

7.5 Documentation

Supplier shall ensure that appropriate documentation is prepared and, if required, signed by the appropriate person(s). The shipping documentation shall accurately reflect specific traceability to the items being shipped.

8 Quality Assurance (QA)

8.1 QA Requirements Specific to Item(s) or Service

8.1.1 The Supplier shall allow the Buyer, its agent and the DOE access to their facility and records pertaining to this purchase order for the purpose of Surveillance at mutually agreed times.

8.1.2 Deleted.

8.1.3 Deleted.

8.1.4 Supplier may utilize an independent laboratory to provide testing services.

8.2 Additional Requirements

8.2.1 Deleted.

8.2.2 Supplier shall submit their Quality Assurance Manual for information.

8.2.3 No substitutions are authorized. Should the Seller be unable to meet the specifications exactly as written and in compliance with referenced specifications, codes and drawings, the Seller shall notify the Buyer.

8.2.4 Seller shall be required to identify and promptly document all deviation from the requirements of the procuring documents. In addition, the Seller shall be required to describe the recommended disposition based on appropriate analysis. Submittals of request for deviations from lower-tier suppliers shall be through the prime Seller to the Buyer.

8.2.5 Deleted.

9 Configuration Management

Housings covered by this specification are identified with Component Identification Numbers shown on the Data Sheets. Each Housing shall be identified with the Component Identification Number in accordance with Tagging in section 7.3 of this specification.

10 Documentation and Submittals

10.1 General

10.1.1 Documentation shall be submitted to the Buyer in accordance with this specification and as summarized on the G-321-E and G-321V forms. Form G-321-E, *Engineering Document Requirements*, lists all the engineering documents required and Form G-321-V, *Quality Verification Document Requirements*, lists all the documents required for quality verification. These form are included in the MR.

10.1.2 Each document to be submitted must be listed on the 15EX form. This form tracks the scheduled and actual delivery of each submittal. The form shall be submitted per the G-321-E form.

10.1.3 All deviations and/or conflicts considered for incorporation in the work must be submitted to the Buyer on a completed Supplier Deviation Disposition Request (SDDR) form, as attached to Part 2 of the MR, for Buyer's review and resolution before proceeding.

10.2 Drawings

10.2.1 **Outline Drawings**

Seller shall provide drawings with outline dimensions, services, foundations and mounting details. Drawings shall show external envelope, including lifting lugs, centerline(s), location of test connections and details related to foundations and mountings. Seller shall provide anchor and mounting details for the filter housing to support Buyer's support frames/hangers.

10.2.2 **Shop Detail Drawings**

Seller shall provide details of construction and fabrication (per ASME AG-1, AA-6240) drawings.

- Tolerances as specified per ASME AG-1, HA-4243.
- Location, type, size and extent of all welds.
- Challenge aerosol injection and sampling manifolds.
- Dimensional plan and sectionals showing the location of challenge aerosol injection and sampling port on the filter housing.
- The type size and pressure taps and plugs.
- Deleted.
- Dimensions required to support commissioning and surveillance testing

10.2.3 **Assembly Drawings**

Seller shall provide assembly drawings in accordance with Seller's standards for Buyer's review.

10.3 Deleted

10.4 Procedures

10.4.1 Seller shall provide welding, welding inspection (NDE), weld repair procedures and personnel qualification records as required by the applicable Welding Code listed in HA-6140 as well as Exhibit 7, *Welding of Structural Stainless Steel and Welding of Structural Carbon Steel to Structural Stainless Steel,* Section 12.2.

10.4.2 Seller shall provide visual inspection procedure as required by ASME AG-1, HA-5200 and FG-5000. Seller shall submit a checklist including identification of specific AG-1 listed items that would not apply to the inspection.

10.4.3 Seller shall provide Pressure Boundary Leakage Test (HA-5330) Procedure (prepared with guidance given in ASME AG-1 Mandatory Appendix TA-III).

10.4.4 Seller shall provide Structural Capability Test (HA-5500) Procedure (prepared with guidance given in ASME AG-1 Mandatory Appendix TA-II).

10.4.5 Seller shall provide Mounting Frame to Housing Leakage Test (HA-5400) Procedure (prepared with guidance given in ASME AG-1 Non-Mandatory Appendix TA-A).

10.4.6 Seller shall provide procedures for repairs of materials with defects (HA-6123).

10.4.7 Seller shall provide test procedures for differential testing of HEPA filter Housing with new HEPAs installed (TA- 4631). HEPA filters used for this test shall be manufactured in accordance with the requirements of ASME AG-1-2009.

10.4.8 Seller shall provide shipping preparation procedures in accordance with 24590-WTP-3PS-G000-T0003, General Specification for Packaging, Shipping, Handling and Storage Requirements, Section 11.2.

10.4.9 Seller shall submit procedures covering how PMI will be conducted and documented per Exhibit 2, Positive Material Identification (PMI) for Shop Fabrication, Section 3.2.

10.4.10 Seller shall submit bag-out change procedure as required by paragraph 3.4.4 of this specification.

10.5 Inspection and Test Reports

10.5.1 Deleted

10.5.2 Seller shall provide Visual Inspection Report for each housing. Inspections shall be in accordance with ASME AG-1, HA-5200 and FG-5000.

10.5.3 Seller shall provide Pressure Boundary Leakage test report for each housing tested per the requirements of ASME AG-1, HA-5340 to include results of ASME AG-1, HA-5400.

10.5.4 Seller shall provide Structural Capability Test Report for each housing tested required by ASME AG-1, HA-5500.

10.5.5 As applicable, Seller shall provide record of repairs to materials or parts that were first rejected and then repaired for use in accordance with Seller's standards.

10.5.6 Seller shall provide manufacturer's test reports showing all other factory tests performed to adjust each component and all shop tests required to prove compliance with the specified performance criteria.

10.5.7 Seller shall provide calibration reports and records for all instrumentation and test equipment used in the performance of shop tests and inspections under this specification.

10.5.8 When the Seller elects to use other types of connections referenced by ASME AG-1, HA-4320, the Seller shall document qualification of the alternate connection type. This applicability of this evaluation / test reporting requirement will be identified following the Buyer's review of the Seller's design submittal.

10.5.9 Seller shall submit PMI Testing Reports per Exhibit 2, *Positive Material Identification (PMI) for Shop Fabrication*, Section 6.

10.5.10 As applicable, Seller shall submit Material Test Reports (MTR) in accordance with Code requirements.

10.5.11 Deleted.

10.5.12 Seller shall submit test reports including liquid penetrant examination and verification reports , pressure testing and verification reports and inspection and mechanical test reports for all housings in accordance with Exhibit 7, *Welding of Structural Stainless Steel and Welding of Structural Carbon Steel to Structural Stainless Steel,* Section 12.1.

10.6 Calculations

All calculations and analyses to be provided to the Buyer shall be performed in accordance with 24590-WTP-3PS-G000-T0014, *Engineering Specification for Supplier Design Analysis*.

10.6.1 Deleted

10.6.2 A detailed stress analysis of all major Housing components and their supporting structures shall be prepared in sufficient detail to show that each of the stress limitations identified in HA-4220 are satisfied when each Housing (and supporting structures) is subject to the load combinations of ASME AG-1, HA-4212 and as identified by this specification.

10.6.3 Criteria for gasket compression and an evaluation of gasket service life (based on the identified service conditions) shall be provided per ASME AG-1, HA-4410.

10.6.4 When the Seller elects to use other types of connections as referenced by Article HA-4320, the Seller shall complete an engineering execution evaluation to qualify these connections. This requirement will be identified following the Buyer's review of the Seller's design submittal.

10.6.5 Calculations, reports, etc. which have been previously performed and documented by the Seller for the design may be submitted to satisfy requirements of this specification provided the documentation can meet these stated standards.

10.7 Manuals

10.7.1 Seller shall submit their Quality Assurance (QA) program for the BUYER's information.

10.7.2 Seller shall submit an Installation Instruction Manual with drawings and procedures required for safe assembly and installation of material, including any explanations for special tools in accordance with 24590-WTP-3PS-G000-T0003, *General Specification for Packaging, Shipping, Handling, and Storage Requirements*, Section 11.1.1.

10.7.3 Seller shall submit their Operation and Maintenance Manuals. Manuals shall include:

- Complete, detailed descriptions of components and accessories.
- Installation and performance data for equipment.
- Startup instructions.
- Operation and maintenance requirements.
- Drawings required for operation, maintenance and repairs.
- Operational troubleshooting guides.

10.7.4 Seller shall submit a Site Storage, Handling, and Maintenance Requirements Manual with procedures and instructions for site storage, handling, and maintenance that will preserve equipment until it is put into operation in accordance with 24590-WTP-3PS-G000-T0003, *General Specification for Packaging, Shipping, Handling, and Storage Requirements*, Section 11.1.2.

10.8 Certificates of Compliance

10.8.1 The Seller shall provide Certified Test Reports and Manufacturer's Certificate of Compliance for materials as required per ASME AG-1 Article HA-3300.

10.8.2 Deleted

10.9 Schedules

10.9.1 Seller shall submit schedule of engineering, material purchase and fabrication.

10.10 Product Data

10.10.1 Seller shall submit MDS as listed in Part 2 of the MR, with requested data fields completely filled out by the Seller, showing all information required to determine that the housings and components specified herein are of the design and materials specified herein.

10.10.2 Seller shall submit safety data sheets (SDS) for all chemicals and hazardous materials shipped to WTP, including but not limited to lubricants, gears oils, greases, solvents, etc.

10.10.3 Seller shall provide a detailed description of their work inspections and tests planned during the receipt of materials, manufacturing, testing, and conformance verification activities as noted in Section 6 of this specification.

10.10.4 Seller shall submit a material list with specific model number. manufacturer and catalog cut sheets for all equipment.

10.11 Seismic Analysis

Seller shall provide a seismic analysis for each Housing that meets the requirements of Exhibit 1, *Structural Design Loads for Seismic Category III & IV Equipment and Tanks,* Sections 1.2 and 4.3.2.

11 Design Changes Incorporated by Reference

24590-WTP-SDDR-MS-17-00026*
24590-WTP-SDDR-MS-17-00029*
24590-WTP-SDDR-MS-17-00034*
24590-WTP-SDDR-MS-17-00044*
24590-WTP-SDDR-MS-17-00065*
24590-WTP-SDDR-MS-17-00066*

*New design changes

Exhibit 1: Structural Design Loads for Seismic Category III & IV Equipment and Tanks

Specification 24590-WTP-3PS-FB01-T0001, Rev. 6 was used to create the following exhibit. Specification Change Notices (SCNs) have been evaluated and there are no applicable SCNs.

1 Scope	
1.1 General	This exhibit provides structural design loads for Seismic Category III (SC-III) and Seismic Category IV (SC-IV) equipment and tanks on the River Protection Project – Waste Treatment Plant (RPP-WTP) located at the Department of Energy (DOE) Hanford Site in Richland, Washington. The seismic categories are derived from the performance categories defined in DOE-STD-1020-94 (Ref. 2.7). The loads include dead, live, wind, fluid, earthquake, snow, ashfall, lateral earth pressure, operating pipe reaction, and thermal loads. This exhibit is to be used in combination with the Equipment/Tank Technical Specifications, which may include supplemental codes applicable to the specific Structure, System, or Component (SSC). In case of conflicts between this exhibit and other technical requirements in the Equipment/Tank Technical Specifications, the Seller shall identify such conflicts to the Buyer in writing and obtain resolutions documented in writing. These conflicts may also include inconsistency of load definitions, conditions and combinations as specified by the referenced codes and standards.
1.2 Definitions	EQUIPMENT: Mechanical, electrical, or control system component or element that is part of a mechanical and/or electrical system. SC-IV EQUIPMENT/TANK: Equipment/Tank required to be designed for the SC-IV loads and load combinations provided in this exhibit. This includes equipment/tank assigned SC-IV for seismic design per the facility-specific Preliminary Documented Safety Analysis (PDSA) document or Documented Safety Analysis document.
2 Applicable Documents	For the codes and standards listed below, the specific revision or effective date identified, as well as the specific revision or effective date of codes and standards that they incorporate by reference (daughter codes and standards), shall be followed. The effective dates and revisions listed in Section 2 shall apply to subsequent references to the codes and standards within this exhibit.
2.1 American Concrete Institute (ACI)	ACI 318-99 Building Code Requirements for Structural Concrete and Commentary.
2.2 American Concrete Institute (ACI)	ACI 349-01 Code Requirements for Nuclear Safety related Concrete Structures and Commentary.
2.3 American Institute of Steel Construction (AISC)	AISC M016-89 Manual of Steel Construction — Allowable Stress Design, Ninth Edition.
2.4 American Society of Civil Engineers (ASCE)	Manuals and reports on Engineering Practice; No. 78, Structural Fire Protection, ASCE 1992.
2.5 American Society of Civil Engineers (ASCE)	Minimum Design Loads for Buildings and Other Structures, ASCE 7-98.
2.6 American Society for Testing and Materials (ASTM) International	Material for steel anchor bolts, ASTM F1554 grade 36, unless specified otherwise on the design drawings.
2.7 Department of Energy (DOE)	DOE-STD-1020-94 (Including Change Notice #1 dated Jan 1996) Natural Phenomena Hazards Design and Evaluation Criteria for Department of Energy Facilities.
2.9 International Conference of Building Officials (ICBO)	Uniform Building code, UBC-97

2.15 American Society of Mechanical Engineers (ASME)	ASME Boiler and Pressure Vessel Code, Section II, Part D, Subpart 1 (Any edition of the code between 1995 and current edition)
3 Methodology	Methodology used in the seismic design of Seismic Category III & IV equipment and tanks shall be as defined in the Equipment/Tank Technical Specifications and the supplemental codes applicable to the SSC. For SC-IV equipment designed to UBC-97 (Ref. 2.9) Section 1632, attachments for floor or roof mounted equipment weighing less than 400 pounds need not be designed.
4 Design Loads	
4.3 Earthquake Loads	
4.3.1	Earthquake loads on equipment and tanks supported by structures shall be calculated per the provisions of UBC-97 (Ref 2.9), Section 1632, using the following parameters: I_p = 1.0 For SC-IV equipment tanks C_a = 0.24 a_p = 1.0 for rigidly mounted rigid* equipment = 2.5 for flexible equipment** and flexibly mounted rigid equipment = 1.0 for tanks * Rigid equipment are defined as those with a fundamental period of less than or equal to 0.06 seconds (≥17Hz). ** Flexible equipment are defined as those with a fundamental period of greater than 0.06 seconds (<17Hz). R_p = 3.0 To be used when equipment is attached directly to structural steel = 1.5*** To be used by suppliers unless otherwise specified on the Equipment/Tank Specification *** Based on actual conditions and location, Buyer's Civil, Structural, Architectural (CSA) personnel may approve an R_p of 3.0 in calculations.
4.3.2	Earthquake loads for self-supporting tanks (i.e. supported on their own foundation) shall be calculated per the provisions of UBC-97 (Ref. 2.9), Section 1634, using the following parameters: I = 1.0 for SC-IV tanks C_a = 0.24 C_v = 0.32
4.4 Dead Loads	Dead loads include the weight of permanent equipment/tanks as well as their Attachments.
4.5 Live Loads on Equipment-Supported and Tank-Supported Platforms and Walkways	Platforms and Walkways - 100 psf Stairs treads - 100 psf or 300 lbs. concentrated loads applied over an area of four (4) square inches, whichever load produces greater effect on equipment. Handrails for stairs and platforms - Per Table 16B of UBC-97 (Ref. 2.9)
4.6 Thermal Loads	
4.6.1 Base Temperature	The base temperature for thermal analyses shall be 70 °F. This temperature is based on recommendations from ACI 349 (Ref. 2.2).
4.6.2 Outdoor Ambient Temperatures	Unless specified otherwise in the Equipment/Tank Technical Specifications or datasheets, ambient air temperatures shall be as follows: For SC-IV equipment: 115 °F maximum, -25 °F minimum
4.6.3 Operating Temperatures (Normal and Abnormal), T_o	Operating (normal and abnormal) temperatures are provided in WTP Equipment/Tank Technical Specification. Abnormal Temperatures are due to an anticipated eight-hour loss of cooling event, which is postulated to occur once per year, and is not the result of an accident or

	natural phenomena hazards (NPH). Abnormal temperature thermal loads shall not be considered concurrent with earthquake (E) loads. For load combinations which include earthquake (E), T_o shall be normal operating temperature thermal loads only. For load combinations without seismic (E), T_o shall be greater of normal or abnormal operating temperature thermal loads.
4.6.4 Accident Temperatures (Design Basis Event), T_a	Accident temperatures are associated with the Design Basis Event (DBE) and provided in the WTP Equipment/Tank Technical Specifications, unless noted otherwise in Section 5 of this exhibit and are described as: a) High energy line break (HELB). Which are to be considered concurrent with NPH loads in accordance with the appropriate codes. b) Loss of facility cooling combined with extreme outdoor temperatures. This load and NPH Temperature load shall not be considered concurrent with earthquakes (E) loads.
4.6.5 Temperature Limitations on Structural Elements	SC-III and SC-IV designed steel and stainless steel structures shall use reduced yield stress (Fy) and elastic modulus (E) in accordance with the ASCE Engineering Practice 78 (Ref. 2.4), see example provided in Appendix A.
5 Loads and Load Combinations	The following loads and load combinations are applicable to both SC-III and SC-IV equipment and tanks.
5.1 Structural Steel Design Load Combinations	For the design of equipment and tanks, the following loads shall be combined with other applicable loads, per the provisions of the Equipment/Tank Technical documents included with the Purchase Order (P.O.). A Ashfall Loads D Dead Loads E Earthquake (Seismic) Loads (Due to DBE) L Live Loads S_N Snow Loads W Wind Loads T_o Thermal Loads during Normal & Abnormal Operating Conditions T_a Thermal Loads due to Accident (DBE) Temperature P_o Maximum or minimum differential pressure load generated by Normal or Abnormal HVAC operations P_a Maximum or minimum differential pressure load generated by DBE S Allowable Stress per Allowable Stress Design Method For the design of equipment/tank supports, the following service-level load combinations shall apply. Note: the 1/3 allowable stress increase discussed in UBC-97 (Ref. 2.9), Section 1612.3.2, has been incorporated into the following combinations through the use of the 0.75 factor. No further stress increase is allowed. The following load combinations are based on Section 1612.3.2 of UBC-97 and using the Allowable Stress Design Values of AISC M016, ASD Ninth Edition (Ref. 2.3). $S = D+L+A+P_o+T_o$ $S = D+L+S_N+P_o+T_o$ $S = 0.75(D+L+W+P_o+T_o)$ $S = 0.75(D+L+S_N/2+W+P_o+T_o)$ $S = 0.75(D+L+S_N+W/2+P_o+T_o)$ $S = 0.75(D+L+P_o+T_o+E/1.4)$ $S = 0.75(0.9D+P_o+T_o \pm E/1.4)$ $S = 0.75(D+L+P_a+T_a)$ $S = 0.75(D+L+T_a+E/1.4)$ Where T_a is Due to HELB

5.1.2 Other Loads	Where other loads are to be considered in design, each applicable load shall be added to the combinations specified above per requirements of Section 1612.3.3 of UBC-97 (ref. 2.9).
5.2 Reinforced Concrete Design Load Combinations (Anchorage design)	For equipment and tanks anchorage design, the following loads shall be combined with other applicable loads, per the provisions of the Equipment/Tank Technical Specifications. A Ashfall Loads D Dead Loads E Earthquake Loads F Fluid Loads H Lateral Earth Pressure Load L Live Loads R_o Operating Pipe Reaction Load S_N Snow Loads T_o Thermal Loads during Normal & Abnormal Operating Conditions W Wind Loads T_a Thermal Loads due to Accident (DBE) Temperature P_o Maximum or minimum differential pressure load generated by Normal or Abnormal HVAC operations P_a Maximum or minimum differential pressure load generated by DBE U Required Strength per Strength Design Method The following load combinations are based on section 9.2 of ACI 318 (Ref. 2.1). $U = 1.4D+1.7L+1.7A$ $U = 1.4D+1.7L+1.7S_N$ $U = 0.75(1.4D+1.7L+1.7W)$ $U = 0.75(1.4D+1.7L+1.7S_N+1.7W)$ $U = 0.9D \pm 1.3W$ $U = 1.4D+1.7L+1.7A+1.7H$ $U = 1.4D+1.7L+1.7S_N+1.7H$ $U = 0.9D+1.7H$ $U = 1.4D+1.7L+1.7A+1.4F$ $U = 1.4D+1.7L+1.7S_N+1.4F$ $U = 0.9D+1.4F$ $U = 1.4(D+T_o)$ In addition, the following load combinations based on UBC Section 1612.2.2 shall apply. $U = 1.1(0.9D \pm E)$ $U = 0.75(1.4D+1.7L+1.7S_N+1.4T_a+1.4R_o)$ Where Ta is Accident (DBE) Temperature [see 4.6.4(b)] $U = D+L+S_N+F+H+T_a+R_o+E$ Where T_a is due to (HELB) [see 4.6.4(a)] $U = 0.75(1.4D+1.7L+1.4T_o+1.4P_o+1.4R_o)$ $U = 0.75(1.4D+1.7L+1.7S_N+1.4T_o+1.4P_o+1.4R_o)$ $U = 1.4(D+T_o+P_o)$ $U = 1.1(1.2D+L+0.2S_N+1.3F+1.6H+1.2T_o+1.2P_o+1.2R_o+E)$ Where T_o and P_o are the normal operating values only $U = 0.75(1.4D+1.7L+1.7S_N+1.4T_a+1.4P_a+1.4R_o)$ $U = D+L+S_N+F+H+T_a+P_a+R_o$

6 Equipment and Tank Anchorage	The Supplier shall furnish the Buyer with the following information: • Location of anchorage in relation to equipment. • Design loads on the anchorage shall be reported by individual load and load combination. • Coordinate system and sign conventions. The selected anchor bolt material for the WTP project is ASTM F1554 (Ref. 2.6). Use of other anchor bolt materials, require the approval of the Buyer.

Appendix A

Strength and Modulus Reduction for Structural Steel & Stainless Steel

The equation below is from ASCE Manuals and Reports on Engineering Practice No. 78, Structural Fire Protection, Appendix A.1.2.2 for 0°C < Temperature < 600°C (32°F < Temperature < 1112 °F)

For A36 Steel: Tensile yield strength, $F_y := 36 \cdot ksi$ Modulus of Elasticity, $E := 29 \cdot 10^3 \cdot ksi$

$$F_{yReduction_i} := \left[1 + \frac{\frac{5}{9} \cdot \left(Temp_i - 32\right)}{900 \cdot \ln\left[\frac{\frac{5}{9} \cdot \left(Temp_i - 32\right)}{1750}\right]} \right] \cdot F_y \qquad E_{Reduction_i} := \left[1 + \frac{\frac{5}{9} \cdot \left(Temp_i - 32\right)}{2000 \cdot \ln\left[\frac{\frac{5}{9} \cdot \left(Temp_i - 32\right)}{1100}\right]} \right] \cdot E$$

The tensile strength and modulus of elasticity of steel decrease with increasing temperature as shown below for A36 steel:

Yield Strength	Temperature °F	Modulus of Elasticity
35.2	> 150	$28.7 \cdot 10^3$
34.7	200	$28.5 \cdot 10^3$
34.2	250	$28.2 \cdot 10^3$
33.6	300	$27.9 \cdot 10^3$
32.2	400	$27.2 \cdot 10^3$
30.5	500	$26.4 \cdot 10^3$
28.6	600	$25.3 \cdot 10^3$
$F_{yReduction}$ = 27.6 ksi	Temp = 650	$E_{Reduction}$ = $24.7 \cdot 10^3$ ksi
26.4	700	$24 \cdot 10^3$
25.2	750	$23.3 \cdot 10^3$
23.9	800	$22.5 \cdot 10^3$
22.5	850	$21.5 \cdot 10^3$
21	900	$20.5 \cdot 10^3$
19.5	950	$19.4 \cdot 10^3$
17.8	1000	$18.1 \cdot 10^3$

Exhibit 2: Positive Material Identification (PMI) for Shop Fabrication

Specification 24590-WTP-3PS-G000-T0002, Rev. 9 was used to create the following exhibit. Specification Change Notices (SCNs) have been evaluated and there are no applicable SCNs.

1 Scope	This exhibit covers the minimum requirements for and the extent of application of Positive Material Identification (PMI) testing of shop fabricated pressure retaining equipment and piping. This exhibit applies to shop fabrication only.
3 Technical Requirements	
3.1 General	The purpose of PMI is to provide evidence that the materials are correctly supplied as specified by project documents. PMI is required for shop-fabricated items fabricated from the alloys identified in Table 1. When required by this exhibit, PMI testing will be done on each component of a pressure retaining assembly. This shall include each individual segment of pipe, each plate, and all other pieces of base materials (e.g., forgings, fittings, and tubing) and all required pressure retaining welds. For purposes of this exhibit, the following definitions are used: <u>Alloy</u>: Metallic materials (including welding filler materials) which contain alloying elements including but not limited to: Chromium (Cr), Nickel (Ni), Molybdenum (Mo), Copper (Cu) or Tungsten (W). <u>300 Series Stainless</u>: Austenitic Stainless Steels (304L, 316L, etc.) <u>6 % Mo</u>: AL6XN, 254 SMO, etc. <u>Duplex Stainless Steel</u>: CD4MCu, etc. <u>Nickel Base</u>: Alloy C-22, 625, 690, etc.
3.2 Responsibility	The Seller shall submit to the Buyer, for review and comment prior to fabrication, procedures covering how PMI will be conducted and documented. The Seller's procedures shall include the instrument manufacturer's procedures and requirements, operator qualification/re-qualification requirements, instrument calibration method(s), calibration frequency during testing, criteria for acceptance or rejection, material identification method, and record keeping.
3.3 Verification Method	
3.3.1	Instruments used for PMI shall be of the type that will provide quantitative, recordable, elemental composition results for positive identification of the alloy elements present. a) PMI shall be done per the procedures outlined by the manufacturer of the PMI instrument being used. Modification of these procedures must be approved by the Buyer. b) Each PMI instrument shall be calibrated according to the manufacturer's requirements.

3.3.2	The methods/instruments listed below are acceptable. In application, they must not be used in a "go-no-go" mode. The only acceptable objective is the positive identification, listing, and quantification of the relevant elements listed in Section 7. a) Portable X-ray fluorescence analyzers. Use is limited to the following instruments or their equivalent unless prior approval is given by the Buyer: • TN Technologies Alloy Analyzer 9266, 9277 (The Metallurgist XR) or 9288 • Outokumpu X-Met 840, or X-Met 880 • Niton Alloy Analyzer (800 Series) • Thermo Scientific Niton XL3t Analyzer • Metorex X-Met 920, X-Met 3000TA or X-Met 3000TX Metal Analyzer • Innov-X Systems XT Series Analyzer • Innov-X Systems Alpha 6500 Series Analyzer • Innov-X Systems Delta Model DP-2000, DS-2000, or DC-200 Analyzer b) Portable optical emission analyzers. Use is limited to the following instruments or their equivalent unless prior approval is given by the Buyer: • SpectroPort Model TP-07 or TFO-02 • Outokumpu ARC-MET 900 or the New Spectrotest • SpectroLab, Spectrotest and Spectrotest Jr. Any other instrument will require Buyer's approval via the submittal process. Note: Arc strikes, if any, need not be removed.
3.3.3	In lieu of using portable instruments, chemical analysis can be performed on actual material samples. Care must be exercised while collecting samples, as contamination can be contributed by the removal tools. Sample extraction shall not weaken or reduce the functionality of the component. Laboratory analysis reports shall be traceable to the individual component from which the sample was taken (See Section 6, below).
3.3.4	Parts that are too small to be tested using an alloy analyzer are exempt from PMI testing. If such exemption is claimed, the PMI procedure shall specify the minimum part size capable of being tested.
3.4 Welding Consumable Control	In addition to PMI testing required by this exhibit, the Seller shall have in place, and implement, welding consumable material control systems that can be verified by auditing. PMI of completed pressure retaining welds is required as indicated in Table 1. Production "Run Off" weld test coupons may be used for chemical analysis checks.
4 Extent of PMI	PMI shall be performed on completed equipment, or assembled parts of equipment, at such time as to ensure that only verified materials have been used in the fabrication and final assembly of components. If the assembled equipment configuration prevents PMI of any individual part, then that part shall be tested prior to assembly and be noted as such on the PMI documentation.
4.1 Vessels, Exchangers, Tanks, Filters and other Manufactured Equipment	Vessels, exchangers, and other manufactured equipment shall have PMI testing performed at the Seller's facilities. This shall include piping and components supplied as part of an equipment "package" or skid.
5 Identification	
5.1 General	All shop-fabricated items/pieces that have been successfully subjected to the required PMI shall be marked. The mark shall be durable and last through transportation and receiving inspection at the Buyer's facility. See Section 7 for items that do not pass PMI.

5.2 Marking Materials	Marking materials and adhesive tape selected shall not cause corrosion or other harmful effects. Requirements for marking materials: • The total chloride/fluoride content shall not exceed 200 ppm. • The total sulfur content shall not exceed 400 ppm. • The total of low melting point metals such as lead, zinc, copper, tin, antimony, and mercury shall not exceed 1 percent; of this, mercury shall not exceed 50 ppm.
5.3 Equipment and Equipment Components	When it has been verified that the material has a composition consistent with the material specified, then it must be stamped with letters "PMIV". Use low stress stamps for identification. Items that cannot be stamped shall have an alternate system of marking. Heat exchanger tubing shall not be stamped. Any alternate system, and the items for which it will be used, must have Buyer approval. To the maximum extent possible, the stamping/marking shall be located for ease of future reference/verification.
5.5 Fasteners and Small Parts	Fasteners and small parts shall be marked in accordance with the Seller's procedure using a hard marking method, an indelible ink, or paint.
6 Records of PMI	Results shall be recorded on PMI report forms, which shall indicate, as a minimum, the following for each examination: a) Name of inspector b) Date of testing c) Test method, including PMI instrument name and serial number d) Equipment tag number or pipe spool number (PO number for bulk items) for the specific piece tested e) Quantitative analysis results for relevant elements (see Section 7) A PMI map consisting of assembly and sub-assembly drawings shall be prepared for each piece of fabricated equipment or pipe spool. The map shall include components and welds and show the locations of PMI testing. An extended Shop Spool Sheet shall be provided for each individual spool number where PMI was done. In the case of bulk items, PMI results may be submitted in the form of a certificate verifying that parts were tested according to the requirements of this exhibit. Results shall be reported by heat/lot and shall include the following: a) Name of inspector b) Date of testing c) Test method, including PMI instrument name and serial number d) Type and number of pieces tested e) Acceptable composition ranges for the relevant elements (see Section 7) f) Material identified PMI forms shall become a part of the permanent inspection records. Seller shall submit the completed forms as part of the Final Document Package when required by the Form G-321-V in the Purchase Order.
7 Acceptance, Rejection and Retesting Requirements	All materials tested shall be identified by the PMI instrument as being consistent with the composition of the specified material. The results shall fall within the chemical composition requirements of the ASTM, AWS or other applicable material specification allowing for the accuracy of the instrument. Any questionable PMI result shall be re-analyzed by the same or another instrument, after verification of proper surface preparation. See Section 7.1, below, for materials and welds that fail to meet requirements on the second analysis.

<table>
<tr><td></td><td>The following elements shall be identified and recorded, even if the instrument does provide immediate identification (e.g. display of "316", "6 Mo", etc.):
<table>
<tr><th>Alloy</th><th>Elements</th></tr>
<tr><td>304, 304L</td><td>Ni, Cr</td></tr>
<tr><td>316, 316L</td><td>Ni, Cr, Mo</td></tr>
<tr><td>347</td><td>Ni, Cr, Nb</td></tr>
<tr><td>Duplex, 6% Mo, 254 SMO, AL6XN, etc.</td><td>Ni, Cr, Mo, Cu</td></tr>
<tr><td>Nickel base alloys, C-22, 625, 690, etc.</td><td>Ni, Cr, Mo, W</td></tr>
</table>
Welds joining dissimilar base materials or having filler materials that do not match the base material composition may include an allowance for dilution. Acceptable composition ranges for commonly used combinations of base material and weld filler metals are included in Table 3. Other combinations, when required, shall be identified to the Buyer for approval. Please note that the only proper use of Table 3 is for assessing dissimilar welds.</td></tr>
<tr><td>7.1</td><td>If any material, component, or weld of a type not requiring 100% testing is found to be unacceptable, all other materials, components, or welds (same heat, lot, etc.) represented by that failed item shall be considered suspect. The Buyer shall be notified immediately if a component is confirmed to have failed the PMI. The Seller will then have the following options, with Buyer concurrence:

a) Scrapping/removing all materials, components, or welds represented by the test piece (all of that heat, lot, etc.) and replacing with new components or filler metals, or
b) Performing 100 percent examination of the remainder of the represented materials, components, or welds, and replacing each item that fails the PMI check, or
c) Verifying correct chemistry by laboratory chemical analysis.</td></tr>
<tr><td>7.2</td><td>If questionable values obtained with portable analyzers are verified by laboratory analysis, the laboratory analysis data shall be used and recorded.</td></tr>
<tr><td>7.3</td><td>Any item or component containing materials that have not passed the PMI shall be clearly marked as "DO NOT USE — PMI FAILED" and segregated from the remainder of the stock.</td></tr>
</table>

Table 1 PMI Requirements for Shop Fabricated Items/Pieces

ITEM - (NOTE 1)	VERIFICATION REQUIRED
Type 304 & 304L Stainless Steel Components	No
Type 316, 316L, & 347 Stainless Steel Components	Yes – 100%
6% Mo Components	Yes – 100%
Duplex Stainless Steel Components	Yes – 100%
Nickel Base Alloy Components	Yes – 100%
Alloy Valves	Yes – 100% Body and Bonnet Only
Alloy Pressure Retaining Welds	Yes – 100% of completed welds that join material required to have PMI testing
Bolting — B8M used for Pressure Retaining Connections	Yes – 5 % of total bolts, minimum one check per heat

Note:
1. The following items are exempted unless specifically designated for PMI by the Purchase Order:

   a) All type 304L stainless steel components, piping, and welds
   b) Deleted
   c) Non pressure-retaining parts, such as baffles, trays, tray clips, supports, pall-rings, support rings, etc.
   d) Non pressure-retaining welds and sections of piping, such as drains, vents, overflows, etc.
   e) Gaskets

Table 2 Fluid Codes Requiring PMI Testing (Shop Fabricated Piping and Piping System Components)

Fluid Code		Fluid Code		Fluid Code	
DR	Suspect Radioactive Steam	GU	Nitric Acid Fume	GV	Vessel Vent Radioactive
HN	Nitric Acid	HR	Recovered Nitric Acid	PA	Radioactive Aqueous
PB	LAW Feed	PC	HLW Feed Slurry	PE	Entrained Solids Concentrate
PF	Cs/Tc Concentrate	PH	LAW Melter Feed	PJ	HLW Melter Feed
PP	Ultrafilter Permeate	PR	Suspect Radioactive Liquid	PS	Suspect Radioactive Slurry
PU	Suspect Radioactive Gas/Vapor	PV	Strontium Carbonate	PW	Radioactive Gas/Vapor
PX	Radioactive Slurry	PZ	Waste Feed	RK	Sodium Permanganate
ZE	Plant Wash Fluid	ZF	Plant Washings	ZH	Acidic Effluent
ZJ	Alkaline Effluent	ZL	Spent IX Resin	ZN	Neutralized Effluent
ZR	Suspect Radioactive Condensate	ZS	Process Radioactive Condensate	ZX	Special Decontaminant
ZY	Scrubber Effluent				

Table 3 Base Material and Weld Filler Metal Composition Requirements (Wt %)

MATERIAL	Cr	Ni	Mo	Cu	W	Notes
304L BM	18.0 - 20.0	8.0 - 12.0	---	---	---	
308L WFM	19.5 - 22.0	9.0 - 11.0	0.75 max	---	---	E/ER308L & LT
304L Welds	18.0 - 22.0	8.0 - 12.0	0.75 max	---	---	Note 1
304L BM	18.0 - 20.0	8.0 - 12.0	---	---	---	
316L BM	16.0 - 18.0	10.0 - 14.0	2.0 - 3.0	---	---	
316L WFM	17.0 - 20.0	11.0 - 14.0	2.0 - 3.0	---	---	E/ER316L & LT
304L/316L Welds	16.0 - 20.0	8.0 - 14.0	3.0 max	---	---	Note 1
304L BM	18.0 - 20.0	8.0 - 12.0	---	---	---	
316L BM	16.0 - 18.0	10.0 - 14.0	2.0 - 3.0	---	---	
308L WFM	19.5 - 22.0	9.0 - 11.0	0.75 max	---	---	E/ER308L & LT
304L/316L Welds	16.0 - 22.0	8.0 - 14.0	3.0 max	---	---	Note 1
304L BM	18.0 - 20.0	8.0 - 12.0	---	---	---	
308L WFM	19.5 - 22.0	9.0 - 11.0	0.75 max	---	---	E/ER308L & LT
CD4MCu BM	24.5 - 26.5	4.75 - 6.0	1.75 - 2.25	2.75 - 3.25	---	
304L/CD4MCu Welds	18.0 - 26.5	4.75 - 12.0	2.0 max	---	---	Note 1

Table 3 Base Material and Weld Filler Metal Composition Requirements (Wt %) (cont.)

MATERIAL	Cr	Ni	Mo	Cu	W	Notes
316L BM	16.0 - 18.0	10.0 - 14.0	2.0 - 3.0	---	---	
316L WFM	17.0 - 20.0	11.0 - 14.0	2.0 - 3.0	---	---	E/ER316L & LT
316L Welds	16.0 - 20.0	10.0 - 14.0	2.0 - 3.0	---	---	Note 1
316L BM	16.0 - 18.0	10.0 - 14.0	2.0 - 3.0	---	---	
316L WFM	17.0 - 20.0	11.0 - 14.0	2.0 - 3.0	---	---	E/ER316L & LT
CD4MCu BM	24.5 - 26.5	4.75 - 6.0	1.75 - 2.25	2.75 - 3.25	---	
316L/CD4MCu Welds	16.0 - 26.5	4.75 - 16.0	1.75 - 3.0	---	---	Note 1
AL6XN BM	20.0 - 22.0	23.5 - 25.5	6.0 - 7.0	0.75 max	---	
625 WFM	20.0 - 23.0	58.0 min	8.0 - 10.0	0.50 max	---	E/ERNiCrMo-3
AL6XN Welds	20.0 - 23.0	25.5 min	7.0 - 10.0	0.75 max	---	Note 2
C-22 BM	20.0 - 22.5	Remainder	12.5 - 14.5	---	2.5 - 3.5	
CD4MCu BM	24.5 - 26.5	4.75 - 6.0	1.75 - 2.25	2.75 - 3.25	---	
C-22 WFM	20.0 - 22.5	Remainder	12.5 - 14.5	0.5 max	2.5 - 3.5	E/ERNiCrMo-10
C-22/CD4MCu Welds	16.0 - 22.5	25.0 min	10.5 - 14.5	---	2.5 - 4.5	
C-22 BM	20.0 - 22.5	Remainder	12.5 - 14.5	---	2.5 - 3.5	
C-22 WFM	20.0 - 22.5	Remainder	12.5 - 14.5	0.5 max	2.5 - 3.5	E/ERNiCrMo-10
C-22 Welds	20.0 - 22.5	52.0 min	12.5 - 14.5	---	2.5 - 3.5	Note 1
Alloy 625 BM	20.0 – 23.0	58.0 min	8.0 – 10.0	---	---	
to 304L	18.0 - 20.0	8.0 - 12.0	---	---	---	
to 316L	16.0 - 18.0	10.0 - 14.0	2.0 - 3.0	---	---	
625 WFM	20.0 - 23.0	55.0 min	8.0 - 10.0	0.50 max	---	E/ERNiCrMo-3
Alloy 625 to 304L/316L Welds	19.0 – 23.0	50.0 min	8.0 min	0.50 max	---	
AL6XN (N08367) BM	20.0 - 22.0	23.5 - 25.5	6.0 - 7.0	0.75 max	---	
to 304L	18.0 - 20.0	8.0 - 12.0	---	---	---	
to 316L	16.0 - 18.0	10.0 - 14.0	2.0 - 3.0	---	---	
625 WFM	20.0 - 23.0	55.0 min	8.0 - 10.0	0.50 max	---	E/ERNiCrMo-3
N08367 to 304L/316L Welds	19.0 – 23.0	25.0 min	4.0 – 10.0	---	---	

BM = Base metal; WFM = Weld filler metal

Notes:

1. Acceptance is based on the combined base metal and WFM spec requirements.
2. Acceptance is based on WFM spec and the expected amount of dilution for molybdenum.

Exhibit 3: Minimum Nozzle Design Loads

Specification 24590-WTP-3PS-MV00-T0001, Rev. 5 was used to create the following exhibit. Specification Change Notices (SCNs) have been evaluated and there are no applicable SCNs.

Appendix A
Minimum Nozzle Design Loads

Horizontal Shell Top Nozzle

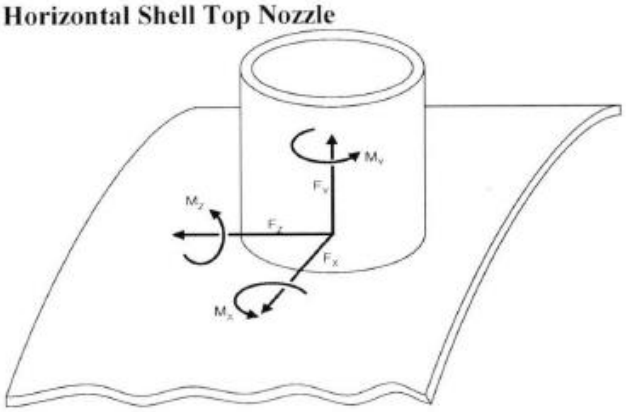

Horizontal Shell. Bottom Nozzle

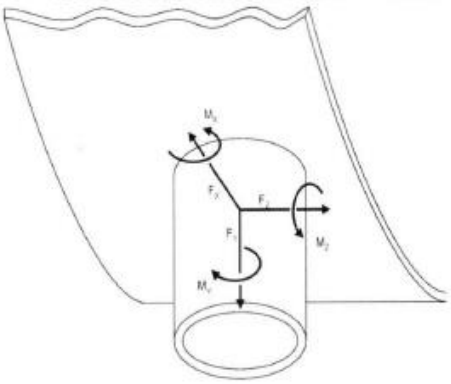

Vertical Shell Horizontal Nozzle

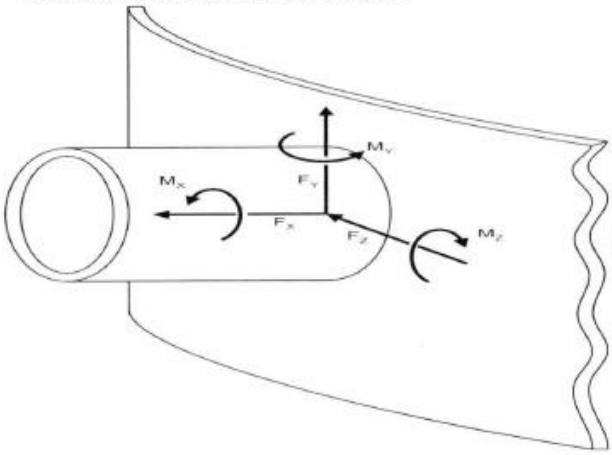

Horizontal Head Nozzle

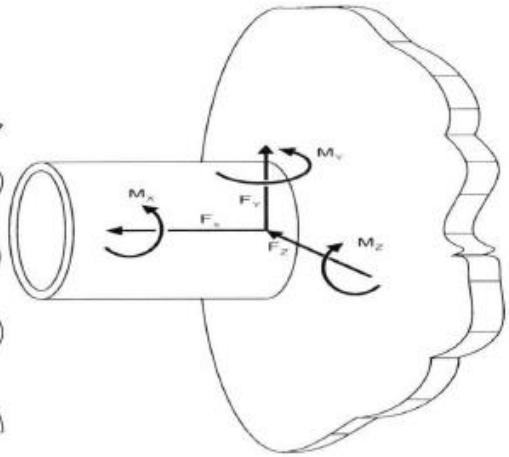

Vertical Bottom Head Nozzle

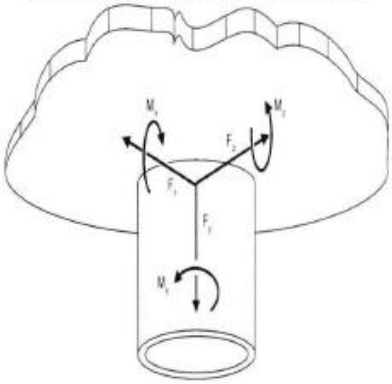

Vertical Top Head Nozzle

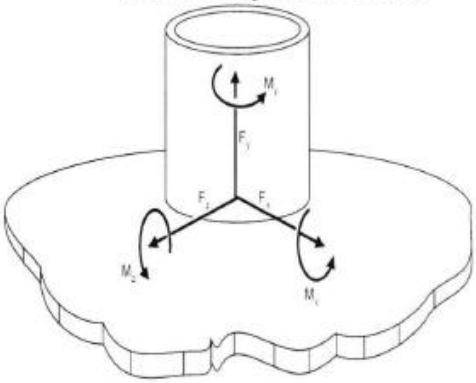

Table A2- Minimum Nozzle Loads Due to Stainless Steel Piping on Vessels Designated as SC-II, III, and IV

Pipe Size	Load Type	Forces			Moments		
		Fx (lb)	Fy (lb)	Fz (lb)	Mx (ft-lb)	My (ft-lb)	Mz (ft-lb)
1 in	Weight	10	16	10	11	7	7
	Seismic	66	44	66	92	137	137
	Thermal	28	24	38	38	77	77
1-1/2 in	Weight	20	32	20	26	16	16
	Seismic	138	92	138	228	342	342
	Thermal	58	52	78	96	192	192
2 in	Weight	34	56	34	46	29	29
	Seismic	244	162	244	398	597	597
	Thermal	104	92	138	169	337	337
3 in	Weight	71	113	71	180	112	112
	Seismic	491	327	491	1570	2350	2350
	Thermal	209	185	278	664	1330	1330
4 in	Weight	120	192	120	342	214	214
	Seismic	834	557	834	2960	4440	4440
	Thermal	356	317	474	1260	2520	2520
6 in	Weight	290	462	290	951	595	595
	Seismic	2025	1350	2025	8290	12400	12400
	Thermal	875	777	1170	3580	7160	7160
8 in	Weight	333	534	333	1210	758	758
	Seismic	2360	1580	2360	10700	16000	16000
	Thermal	1050	938	1410	4800	9590	9590
10 in	Weight	361	578	361	2210	1380	1380
	Seismic	2540	1690	2540	19400	29100	29100
	Thermal	1110	991	1490	8500	17000	17000
12 in	Weight	502	803	502	3240	2020	2020
	Seismic	3510	2340	3510	28100	42100	42100
	Thermal	1550	1380	2070	12400	24800	24800
14 in	Weight	591	946	591	3870	2420	2420
	Seismic	4160	2780	4160	33900	50900	50900
	Thermal	1850	1640	2460	15000	30100	30100
16 in	Weight	757	1210	757	5080	3180	3180
	Seismic	5310	3540	5310	44100	66100	66100
	Thermal	2380	2120	3180	19800	39500	39500
18 in	Weight	1200	1930	1200	8190	5120	5120
	Seismic	8490	5660	8490	71500	107000	107000
	Thermal	2990	2660	3980	25200	50300	50300
20 in	Weight	1280	2050	1280	8630	5400	5400
	Seismic	8910	5940	8910	75900	114000	114000
	Thermal	3660	3260	4880	31200	62400	62400
22 in	Weight	1380	2200	1380	9380	5860	5860
	Seismic	9510	6340	9510	81500	122000	122000
	Thermal	4420	3930	5900	37900	75800	75800
24 in	Weight	1600	2570	1600	11000	6870	6870
	Seismic	11100	7430	11100	96100	144000	144000
	Thermal	5240	4660	6990	45200	90400	90400

Note: Unless otherwise specified on the MDS utilize the minimum nozzle loads specified

Table A4- Minimum Nozzle Loads Due to Carbon Steel Piping on Vessels Designated as SC-II, III or IV

Pipe Size	Load Type	Forces			Moments		
		Fx (lb)	Fy (lb)	Fz (lb)	Mx (ft-lb)	My (ft-lb)	Mz (ft-lb)
1 in	Weight	10	16	10	13	8	8
	Seismic	68	46	68	110	166	166
	Thermal	32	30	44	53	106	106
1-1/2 in	Weight	20	32	20	31	20	20
	Seismic	140	92	140	275	412	412
	Thermal	68	60	90	132	265	265
2 in	Weight	34	54	34	55	34	34
	Seismic	234	156	234	480	721	721
	Thermal	114	100	150	232	465	465
3 in	Weight	62	99	62	176	110	110
	Seismic	482	321	482	1910	2870	2870
	Thermal	231	206	308	915	1830	1830
4 in	Weight	104	167	104	335	209	209
	Seismic	804	536	804	3610	5420	5420
	Thermal	387	344	516	1740	3480	3480
6 in	Weight	243	389	243	949	593	593
	Seismic	1860	1250	1860	10200	15200	15200
	Thermal	906	806	1210	4930	9870	9870
8 in	Weight	353	564	353	1450	903	903
	Seismic	2690	1800	2690	13400	20200	20200
	Thermal	1320	1180	1770	6610	13200	13200
10 in	Weight	384	615	384	2600	1630	1630
	Seismic	2920	1950	2920	23700	35600	35600
	Thermal	1450	1290	1930	11700	23400	23400
12 in	Weight	567	908	567	4150	2590	2590
	Seismic	4310	2880	4310	37100	55600	55600
	Thermal	2140	1910	2860	18400	36800	36800
14 in	Weight	707	1130	707	5400	3380	3380
	Seismic	5380	3590	5380	48100	72200	72200
	Thermal	2670	2380	3570	23900	47900	47900
16 in	Weight	980	1570	980	8040	5020	5020
	Seismic	7450	4970	7450	71900	108000	108000
	Thermal	3700	3290	4940	35800	71500	71500
18 in	Weight	1300	2080	1300	11300	7090	7090
	Seismic	9890	6590	9890	102000	152000	152000
	Thermal	4950	4400	6600	50900	102000	102000
20 in	Weight	1640	2630	1640	14900	9330	9330
	Seismic	12500	8320	12500	132000	198000	198000
	Thermal	6300	5600	8400	66500	133000	133000
22 in	Weight	1900	3040	1900	15400	9620	9620
	Seismic	14400	9610	14400	135000	203000	203000
	Thermal	7330	6520	9770	68800	138000	138000
24 in	Weight	2510	4020	2510	24800	15500	15500
	Seismic	19000	12700	19000	217000	326000	326000
	Thermal	9760	8680	13000	111000	222000	222000

Note: Unless otherwise specified on the MDS utilize the minimum nozzle loads specified

Exhibit 4: Deleted

Exhibit 5: Deleted

Exhibit 6: Deleted

Exhibit 7: Welding of Structural Stainless Steel and Welding of Structural Carbon Steel to Structural Stainless Steel

Specification 24590-WTP-3PS-SS00-T0002, Rev. 6 and its associated Specification Change Notice (SCN) (24590-WTP-3PN-SS00-00013) were used, as applicable, to create the following exhibit.

Acronyms	AISC - American Institute of Steel Construction ANSI - American National Standard Institute ASME - American Society of Mechanical Engineers ASNT - American Society for Nondestructive Testing ASTM - American Society for Testing and Materials AWS - American Welding Society CWI - Certified Welding Inspector FCAW - Flux Cored-Arc Welding GMAW - Gas Metal-Arc Welding GTAW - Gas Tungsten Arc Welding NDE - Nondestructive Examination PO - Purchase Order PQR - Procedure Qualification Record PT - Liquid Penetrant Examination PWHT - Postweld Heat Treatment RT - Radiographic Examination SAW - Submerged Arc Welding (machine and automatic) SCWI - Senior Certified Welding Inspector SDDR - Supplier Deviation Disposition Request SMAW - Shielded Metal-Arc Welding (STICK) SW - Stud Welding UT - Ultrasonic Examination VT - Visual Examination WPQ - Welder/Welding Operator Performance Qualification WPS – Welding Procedure Specifications
1 Purpose	
1.1	This exhibit establishes the procedure qualification, welding, thermal treatment, and examination requirements for shop and field fabrication of structural welded materials and shapes as listed in Paragraph 1.2 of AWS D1.6 for the River Protection Project – Waste Treatment Plant (RPP-WTP), located at Hanford in the southeastern part of the state of Washington.
2 Scope	
2.1	This exhibit is to be used in conjunction with design drawings or data sheets, which will indicate the quality level applicable to the work.
2.2	This exhibit is applicable to both shop and field fabrication.
2.3	Any conflict between this exhibit, the design drawings or data sheet, referenced Codes and Standards, or any supplementary specification requires written clarification from the Buyer prior to proceeding with any work. Any deviation from the design drawings or specifications requires the approval of the Buyer.
2.4	This exhibit applies to structural stainless steel welding and structural carbon steel to structural stainless steel welding per ANSI/AISC N690 and AWS D1.6.
3 Definitions	

3.1	**Buyer**: Bechtel National Inc.
3.2	**Buyer's Representative**: the Buyer's designee(s), who shall witness onsite operations at the supplier and sub-supplier sites and perform onsite inspections and surveillances.
3.3	**Supplier**: the primary Supplier of deliverable items.
3.4	**Field Welding**: performed at the WTP Construction site, either by WTP direct-hires or by onsite subcontractors.
3.5	**Shop Welding**: performed at the Supplier's facility.
3.6	**Welding Control Manual**: collection of weld procedures, NDE, and related documents that specifies how welding and NDE at the WTP Construction site are to be controlled and performed.
4 Applicable Documents	
4.1	This exhibit is in addition to other project requirements such as the technical specifications, data sheets, and the purchase order. Conflicts shall be referred to the Buyer for resolution. The codes and standards listed below shall be followed. Codes and standards identified with an asterisk (*) and daughter codes and standards incorporated by reference shall use the specific revision or effective date identified. When an edition date is not indicated for a Code or Standard, the latest edition and addenda in effect at time of award shall apply. WPSs and WPQs meeting ASME Section IX may be used without restriction provided all other fabrication requirements from AWS D1.6 are met.
4.2	American National Standard Institute (ANSI) • Z49.1 - Safety in Welding, Cutting, and Allied Processes
4.4	American Society of Mechanical Engineers (ASME) • Section V - Boiler and Pressure Vessel Code, Section V, Nondestructive Examination • Section IX - Boiler & Pressure Vessel Code, Section IX, Welding & Brazing Qualifications
4.5	American Society for Testing and Materials (ASTM) • E165 - Standard Test Method for Liquid Penetrant Examination
4.6	American Society for Nondestructive Testing (ASNT) • SNT-TC-1A** - Recommended Practice No. SNT-TC-1A Personnel Qualification and Certification in Nondestructive Testing ** Personnel who perform NDE (including radiographic testing, magnetic particle testing, ultrasonic testing, liquid penetrant testing, electromagnetic testing, neutron radiographic testing, leak testing, acoustic emission testing, and visual testing) to specified acceptance criteria shall be qualified to a "Written Practice" (or procedure) meeting the requirements of the American Society for Nondestructive Testing Recommended Practice No. SNT-TC-1A. This "Written Practice" must meet all the requirements from any one given edition of SNT-TC-1A (and its applicable supplements) as follows: 1988, 1992, 1996, 2001, and 2006. Only the SNT-TC-1A edition selected and its applicable supplements shall be used in the "Written Practice" and that edition shall be met in its entirety (except as shown below). Combining SNT-TC-1A contents from one edition year with another edition year is prohibited, except as follows: If the 1988, 1992, or 1996 editions are utilized, the additional requirements for periodic technical performance evaluation and documentation found in paragraphs 10.2 and 12.1 of the 2006 edition shall also be met.

	The re-certification interval for Level III nondestructive examination personnel shall not exceed five years.
4.7	American Welding Society (AWS) • A2.4 - Standard Symbols for Welding, Brazing and Nondestructive Examination • A3.0 - Standard Welding Terms and Definitions • *D1.1 (2000) - Structural Welding Code – Steel • *D1.6 (1999) - Structural Welding Codes – Stainless Steel • *QC-1 (1996 through 2007 editions) - Standard for AWS Certification of Welding Inspectors
5 Procedure and Welder Qualification	
5.1	The Supplier shall develop and submit to the Buyer all WPSs and PQRs required by ANSI/AISC N690, AWS D1.6 and this exhibit. Welding shall not start until the applicable WPS is returned to the Supplier with authorization to proceed. WTP Construction shall develop and submit to WTP Engineering all WPSs and PQRs required by ANSI/AISC N690, AWS D1.6 and this exhibit. Welding shall not start until the procedures are approved in the Welding Control Manual. WPSs, welders, and welding operators qualified in accordance with ASME Section IX including the supporting PQRs may be used. Impact testing shall be performed when required by the codes, specifications, drawings or data sheets, and contract documents.
5.2	All WPSs and PQRs used for fabrication of purchased items subcontracted by the Supplier shall be reviewed by the Supplier for content and contract compliance prior to submittal to the Buyer.
5.3	The Supplier shall show the applicable WPS and the nondestructive examination (NDE) method on shop drawings. The type of NDE, the extent of NDE (if less than 100%), the NDE procedure number, and the WPS number, or identification reference, shall be shown in one or more of the following: fabrication drawing notes, the applicable weld joint detail, or a table. Welds subject to 10 percent liquid penetrant testing, or 10 percent ultrasonic or radiographic testing, in accordance with ANSI/AISC N690, shall be noted on the drawings. Such drawings shall be submitted to the Buyer for review prior to start of fabrication.
5.4	The Supplier's Welder's Qualification Records shall be made available to the Buyer upon request. All welders and welding operators shall be qualified per AWS D1.6, Section 4B, or ASME Section IX and shall have certificates on file. One AWS D1.6, Annex "F" form or equivalent shall be made for each welding process used. The Buyer reserves the right to require the testing or retesting of welders for qualification in accordance with the AWS D1.6 Code, Section 6.4. All costs and material required for the qualification of welders shall be at the Supplier's expense.
5.5	Welder qualifications must be current and available for review upon Buyer request.
6 Acceptable Welding Processes and Limitations	
6.1	Shielded Metal Arc Welding - SMAW
6.2	Gas Metal-Arc Welding - GMAW • Spray, including pulse spray transfer - unlimited thickness • Globular metal transfer - 3/8 inch maximum material thickness • Short circuiting transfer mode - Prequalified WPS- 3/16 inch maximum material thickness Qualified WPS - 1/4 inch maximum material thickness • Surface Tension Transfer® - Prequalified WPS- 3/16 inch maximum material thickness Qualified WPS - 1/4 inch maximum material thickness

6.3	Flux Cored Arc Welding - FCAW
6.4	Submerged Arc Welding - SAW • Semi-automatic SAW is not allowed • Solid wire electrodes which contain all essential alloys shall be used • Only neutral flux shall be used • Flux shall meet requirements set forth in Paragraph 3.4.2 of AWS D1.6
6.5	Stud Welding - SW
6.6	Gas Tungsten Arc Welding - GTAW
Notes	Fabrication welding may be achieved by any one or combination of the above welding processes. The use of other welding processes shall require specific written authorization by Buyer.
7 Filler Materials	
7.1	Filler material shall be used in accordance with Table 3.3 of the AWS D1.6 Code. All filler materials shall be traceable to a material test report. The material test report shall have actual test report values.
7.2	Tack welds shall be made using a Buyer-accepted WPS with weld filler material suitable for the base material.
7.3	After opening shipping containers of electrodes, fluxes, and other welding materials, their storage and handling shall be as specified in the manufacturer's recommendations and per AWS D1.6 in accordance with Buyer reviewed procedures.
7.4	The storage, baking and drying of all welding consumables (i.e., covered electrodes, flux cored electrodes and fluxes) shall be as recommended by the manufacturer. Segregation of carbon steel, low alloys, and alloy consumables is required during storage, baking, holding, and handling (including portable ovens).
7.5	Metal-cored electrodes shall not be used, unless approved by the Buyer.
7.6	Welding materials shall be selected so that the deposited weld metal is similar in chemical composition and not significantly harder or stronger than the base metal.
8 General Requirements	
8.1	Compliance with this exhibit and Buyer's authorization of WPS and PQR shall in no way relieve the Supplier of the responsibility of providing welds which are sound and suited to the services for which they are intended.
8.2	Welding symbols shall be in accordance with AWS A2.4.
8.2.1	The measured leg (w) of a Skewed-T joint weld is defined as the perpendicular distance from the surface of the joint to the opposite toe. See Appendix A. This Appendix reflects both the WTP Plant Design and Civil, Structural & Architectural approaches to sizing the welds and how they are shown on the design drawings.
8.3	Definitions of welding processes, methods, techniques, and applications shall be in accordance with AWS A3.0.
8.4	All welding shall be performed in accordance with AWS D1.6 and this exhibit except that in the event of conflict, the Supplier shall contact the Buyer for resolution.
8.5	Supplier shall ensure that safety measures for the protection of welders and operators involved in welding and cutting shall be in accordance with the practices specified in the ANSI Z49.1, plus all local, state, federal, and other governing regulations.
8.6	Buyer reserves the right to remove test specimens from any portion of the work to verify the quality of the welding. The Supplier, at his expense, shall repair or replace any base metal or filler metal found to be defective.
8.7	Structural welds shall be as defined by ANSI/AISC N690 or defined as all welds which are necessary for the development of strength between adjoining pieces of steel. Structural stainless steel welds shall be made as shown or noted on design drawings.
8.8	For structural tubular welds, longitudinal weld seams shall be parallel to the longitudinal axis and shall be complete (100%) penetration butt welds. Longitudinal seams of adjoining rolled plate shall be offset from other longitudinal seams by at least five (5) times the wall thickness.

8.9	Back-up rings or strips, when required on the design drawings, shall be compatible with the base metal and in accordance with a Buyer-reviewed WPS.
8.10	Only Buyer-reviewed procedures and revisions shall be used. When requested, the Supplier shall make available to the Buyer the control measures that will be used to ensure that the weld procedures used are current and reviewed for all welding.
8.11	Welds made to procedures that are not pre-qualified or have not been properly qualified and authorized by Buyer shall be rejected and completely removed.
8.12	Cleanliness shall be maintained throughout welding. All stubs, rods, flux, slag and other foreign materials shall be removed from the structure.
8.13	Appearance, quality of welds made, and methods of correcting defective work shall conform to AWS D1.6.
8.14	Provide back-up plates and run-out bars as required for full penetration welds. Run-out bars shall be removed upon completion. Back-up plates shall be as shown on the issued design drawings.
8.16	Welding shall be done only when specified on the design drawings. Welds identified as shop welds may be substituted with an identical field weld. Such substitution shall require the submittal of a Supplier Deviation Disposition Request (SDDR) to obtain Buyer approval.
8.17	Base materials listed in Table 3.2 of AWS D1.6 may use pre-qualified WPS. If these WPS using the listed base materials do not meet the requirements of Section 3 of AWS D1.6, they shall be qualified by testing in accordance with Section 4 of AWS D1.6.
8.18	Stud welding shall meet the requirements set forth in AWS D1.6 with a Buyer-reviewed procedure.
8.19	To avoid iron contamination, austenitic stainless steels shall be protected from the grinding and welding of carbon steels.
8.21	Deleted.
8.22	All surfaces to be welded shall be free of paint, oil, dirt, scale, rust, oxides, and other foreign materials detrimental to weld soundness. All joints shall be free of moisture prior to welding. The welding of stainless steel components to galvanized or previously galvanized carbon steel is prohibited. The welding of stainless steel components to carbon steel components coated with zinc-bearing paint is also prohibited even if the coating has been removed.
8.23	All base metals used shall be traceable to a material test report. The material test report shall have actual test report values.
9 Weld Joint Preparation	
9.1	Weld bevels may be prepared by machining, grinding, or thermal cutting. The bevel surface shall be smooth and meet the required weld joint design. All weld bevels shall be ground/machined to bright metal prior to welding.
9.2	The parts to be joined by fillet welds shall be brought together as closely as practicable. The gap between faying surfaces of lap joints should not exceed 1/16 inch. If the separation is greater than 1/16 inch after straightening and assembly, the leg of the fillet weld shall be

	increased by the amount of separation, but the gap shall not exceed 3/16 inch. The use of filler material as shim stock is prohibited.
9.4	Flux, weld spatter, and slag shall be removed from each weld bead prior to depositing each succeeding pass.
9.5	All welding shall be protected from wind, rain and other harmful weather conditions which may affect weld quality.
9.6	Where full penetration joints are welded from both sides, the first pass shall be back-chipped, ground, or arc-gouged to sound metal before welding the second side. The requirement for back gouging shall be stated on the WPS.
9.7	Vertical welding shall be vertical-up unless otherwise approved for each specific application.
9.8	Care should be taken to minimize distortion during welding. Staggering and back-stepping are acceptable methods.
9.9	Shims and plates may be welded as detailed by the design.
10 Thermal Treatment	
10.1 Preheat and Interpass Temperature Control	
10.1.1	The maximum interpass temperature shall not exceed 350 °F for austenitic stainless steels.
10.1.2	Equipment manufacturers' requirements and limitations on welding and cutting/gouging in terms of preheat/interpass temperature, heat input, technique and methods shall be followed. Preheat shall be per the applicable Code unless stated otherwise.
10.1.3	For WPS involving carbon steel to stainless steel, the carbon steel side of the weld joint shall be preheated in accordance with the requirements of AWS D1.1. This preheating requirement applies for all thermal cutting or gouging processes as well.
11 Nondestructive Examination	
11.1 Nondestructive Examination Requirements	
11.1.1	All nondestructive examination shall be performed in accordance with the AWS D1.6 requirements and the requirements of this exhibit. Specific nondestructive examination, in addition to these requirements, shall be noted on the drawings, purchase specifications, or purchase orders. When Buyer drawings are not used, these requirements shall be noted on the Supplier's drawings. All nondestructive examination methods, acceptance criteria, and additional general requirements shall be in accordance with this exhibit. Welds which are to be examined shall be finished as required for the applicable inspection method.
11.1.2	All visual examinations shall be performed by personnel certified in accordance with ASNT Recommended Practice SNT-TC-1A, Level I, II, or III or certified in accordance with AWS QC-1 as either a Certified Welding Inspector (CWI) or a Senior Certified Welding Inspector (SCWI). All other nondestructive examinations shall be performed by personnel certified in accordance with ASNT Recommended Practice SNT-TC-1A, Level II or III. Supplier NDE procedures shall be submitted to the Buyer for review and permission to proceed. On request, the Supplier NDE certifications shall be submitted to the Buyer, in which case examination shall not proceed until authorized by the Buyer. All NDE procedures, including visual, shall meet the requirements of paragraphs 11.2, 11.3, 11.4, and 11.5 below. Use of NDE procedures meeting the requirements of ASME Section V are acceptable provided prior Buyer approval is obtained. In addition, all other records pertaining to inspection shall be available to the Buyer.
11.1.3	The Supplier shall visually inspect all completed welds. Defective welds shall be repaired in accordance with AWS D1.6, Paragraph 5.12, using Buyer reviewed procedures. The repaired welds shall be 100 percent reexamined using the same method that disclosed the original defect(s).
11.2 Visual Examination	
11.2.1	Visual examination (VT) shall be performed on all welds in accordance with AWS D1.6.
11.2.2	Acceptance criteria shall be in accordance with AWS D1.6, paragraph 6.28.1 or 6.29.1.

11.3 Liquid Penetrant Examination	
11.3.1	Liquid Penetrant Examination (PT) shall be in accordance with ASTM Specification E165.
11.3.2	Acceptance criteria shall be in accordance with AWS D1.6, paragraphs 6.28.4 or 6.29.4 as applicable.
11.4 Ultrasonic Examination	
11.4.1	Ultrasonic Examination (UT) method for groove welds shall be in accordance with AWS D1.6, Section 6, Part C.
11.4.2	Acceptance criteria shall be in accordance with AWS D1.6, paragraph 6.28.3 or 6.29.3.
11.5 Radiographic Examination	
11.5.1	Radiographic Examination (RT) method for groove welds shall be in accordance with AWS D1.6, Section 6, Part B.
11.5.2	Acceptance criteria shall be in accordance with AWS D1.6, paragraph 6.28.2 or 6.29.2.
11.6 Additional Examination for Quality Level "Q" Structural Steel Welds	
11.6.1	Deleted.
11.6.2	Deleted.
11.6.3	Deleted.
11.6.4	Deleted.
11.7 Stud Welds	
11.7.1	Stud welds and repairs to stud welds shall be examined by VT and the bend, or torque testing requirements of AWS D1.6, Section 7.
12 Records	
12.1	Supplier shall submit Quality Verification Documents (NDE reports and material test reports) in accordance with the applicable technical specification and the PO Section 3, Form G-321-V.
12.2	The Supplier shall submit the following for Buyer review and acceptance prior to use in accordance with the G-321-E: • Welding Procedure Specifications and Procedure Qualification Records • Shop drawings in accordance with the requirements of paragraph 5.3 • Weld consumable storage and handling procedure • Weld consumable baking/drying procedure • Weld repair procedure • NDE procedures

Appendix A

Skewed-T Weld Details

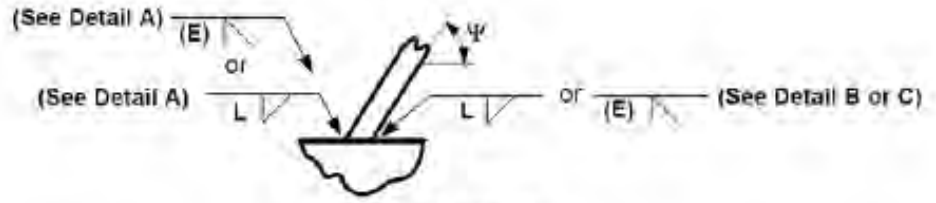

Drawing Callout

L = Leg (size) of fillet weld on 90° T-joint. For a skewed joint, see Annex II of AWS D1.6 to determine inspection dimension "w" shown in Details A and B.

Note: For Pipe Hanger (Hxxxxx) drawings, Rack Support drawings (Rxxxxx), and Seismic Category III/IV Cable Tray Support drawings (ER-Hxxxxx), the weld dimension shown on the obtuse side may be taken directly as "w". The design already takes into consideration the obtuse angle in determining weld size.

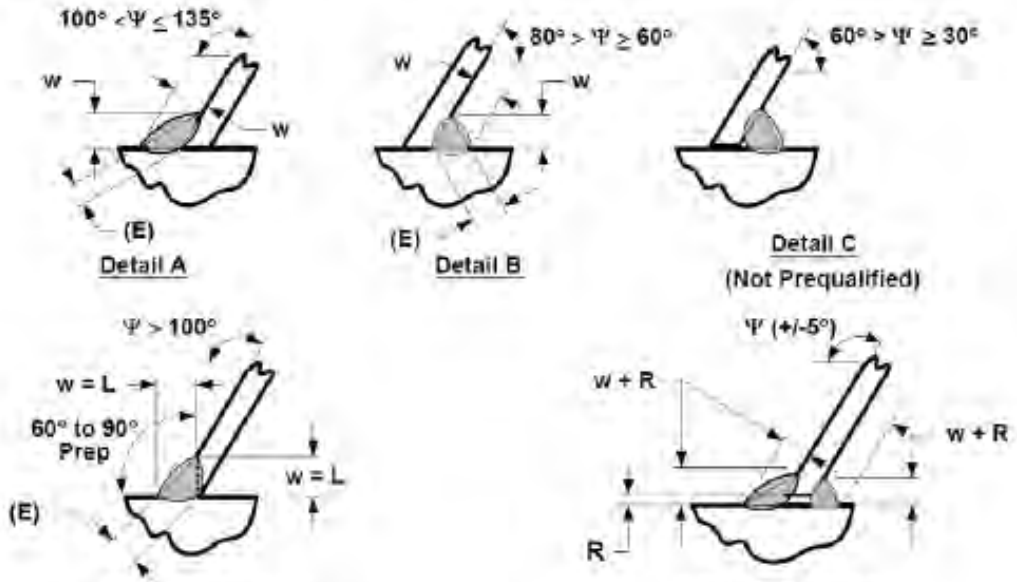

Detail A (Alternate) may be used instead of Detail A if the skewed member is prepped as shown and the same size weld is made. The amount of machining or grinding, etc. should not be more than that required to achieve the required weld size (w).

w = Measured leg of skewed T-joint fillet weld (inspection dimension) per AWS D1.6.

(E) = Effective Throat R = Root Gap

Skewed-T Weld Details

Copyright American Welding Society
Provided by IHS under license with AWS

Exhibit 8: Deleted.

CORROSION EVALUATION

DEP-VSL-00004A/B
Overhead Sampling Vessel

Appurtenances
DEP-VSL-00004A
DEP-EDUC-00006/7
DEP-VSL-00004B
DEP-EDUC-00008/9

Contents of this document are Dangerous Waste Permit affecting

Results

Materials Considered:

Material (UNS No.)	Acceptable Material
Type 304L (S30403)	X
Type 316L (S31603)	X
Al-6XN® 6% Mo (N08367)	X
Hastelloy® C-22® (N06022)	X

Recommended Material Type: **Vessel – Type 304 or Type 316 (max 0.030% C; dual certified)**
Internals – Type 304 or Type 316 (max 0.030% C; dual certified)

Minimum Corrosion Allowance: **0.04 inch (includes 0.024 inch corrosion allowance and 0.004 inch general erosion allowance)**

Inputs and References

- Operating Temperature (°F) (nom/max): 96/125 (24590-BOF-MVC-DEP-00007)
- Design corrosion allowance (inch): 0.04 (24590-WTP-M0C-50-00004)
- Uniform corrosion allowance (inch): 0.024 (24590-WTP-M0E-50-00012)
- Uniform erosion allowance (inch): 0.004 (24590-WTP-M0C-50-00004)
- Location: Room E-0106 (24590-BOF-P1-25-00001)
- Operating conditions are as stated in the applicable section of *Direct Feed LAW Process Corrosion Data* (24590-BOF-RPT-PR-15-001)

Assumptions and Justification (refer to Section 19—References)

- Source data presented on the Process Corrosion Datasheet (PCDS) are conservative with respect to corrosion.[4]
- The Process Overhead Sampling Vessels (DEP-VSL-00004A/B) are exposed to outside temperatures and, therefore, require insulation to prevent freezing.[2]
- The DEP process vessels shall be equipped with a spray mechanism to facilitate adequate internal vessel washing for contamination removal and to prevent the buildup of solids on the walls.[1]
- The DEP process vessels shall be capable of mixing vessel contents to prevent buildup of settled solids and to facilitate collection of a representative sample of vessel contents.[1]

Operating Restrictions

- To protect against localized corrosion in the vessel and transfer piping, develop procedure to bring the vessel contents to within the limits for the material of construction as defined in 24590-WTP-RPT-M-11-002, *WTP Materials Localized Corrosion Design Limits*, in the event that temperature, pH, or chloride concentration exceeds those limits.
- Develop a procedure to control, at a minimum, cleaning, rinsing, and flushing of vessel and internals, as applicable.
- Develop a procedure to control lay-up and storage; includes both before plant is operational and during inactive periods after start-up.
- Procedures are to be reviewed and accepted by MET prior to use.

Some information on all pages may appear to be illegible, however, the information necessary for assuring adequate design is legible.

Concurrence TD
Operations

REV	DATE	REASON FOR REVISION	ORIGINATE	CHECK	REVIEW	APPROVE
1	3/29/18	Revised sect 17 to discuss DFLAW PIBOD properties Update operating temp Discuss non-routine transfer from DEP-VSL-00005A/B	Originator By: Debbie Adler - dladler Org Name: MET Placed: Mar 28, 2018 DLAdler	Checked By: Steven Vail - swvail Org Name: BNI Placed: Mar 29, 2018 SWVail	Robert Davis RBDavis	TErwin
0	9/20/16	Initial Issue	DLAdler	APRangus	RBDavis	TErwin

CORROSION EVALUATION

Please note that source, special nuclear and byproduct materials, as defined in the Atomic Energy Act of 1954 (AEA), are regulated at the U.S. Department of Energy (DOE) facilities exclusively by DOE acting pursuant to its AEA authority. DOE asserts, that pursuant to the AEA, it has sole and exclusive responsibility and authority to regulate source, special nuclear, and byproduct materials at DOE-owned nuclear facilities. Information contained herein on radionuclides is provided for process description purposes only.

This bound document contains a total of 14 sheets.

CORROSION EVALUATION

Corrosion/Erosion Detailed Discussion

DEP-VSL-00004A/B receive evaporator condensate from DEP-COND-00001, caustic scrubber fluids from the LAW LVP system, and sump pump discharge from DEP-SUMP-00002A/B, DEP-SUMP-00004A/B, NLD-SUMP-00031, and NLD-SUMP-00032.

Overhead sampling vessel transfer pumps (DEP-PMP-00004A/B/C) are used to recirculate DEP-VSL-00004A/B contents to a sample connection where samples are collected and fluid is returned to the tank through the eductors. Each batch is sampled and characterized before sending to the process condensate lag storage vessels (DEP-VSL-00005A/B). Off-spec condensate in DEP-VSL-00004A/B can be recycled to DEP-VSL-00002. In the event of an overflow, the liquid will flow by gravity into DEP-VSL-00001.

The vessel contents can be sampled and the vessel are monitored for level, pressure, and temperature.

The overhead sampling vessels are equipped with vessel mixing eductors to homogenize the contents and allow a representative sample to be taken. DEP-VSL-00004A/B are passively purged with air drawn through the vessel head space and are vented to the Vessel Vent Header. This vessel will have capability to add process service water (PSW) for washing.

If the contents of the process condensate lag storage vessels (DEP-VSL-00005A/B) do not meet the requirements for transfer to LERF/ETF, the contents can be transferred to DEP-VSL-00004A/B. Once transferred to DEP-VSL-00004A/B, off-spec effluent can be returned to the evaporator process or be returned to the tank farms.

1 General/Uniform Corrosion Analysis

a Background

General or uniform corrosion is corrosion that is distributed uniformly over the surface of a material without appreciable localization. This leads to relatively uniform thinning on sheet and plate materials and general thinning on one side or the other (or both) for pipe and tubing. It is recognized by a roughening of the surface and by the presence of corrosion products. The mechanism of the attack is an electrochemical process that takes place at the surface of the material. Differences in composition or orientation between small areas on the metal surface create anodes and cathodes that facilitate the corrosion process.

b Component-Specific Discussion

This vessel primarily contains transfers from the LVP-TK-00001 and process condensate from DEP-EVAP-00001. The vessel contents are at 122 °F and pH 9.5. The normal pH, chloride concentration, and temperatures are such that either Type 304L or 316L would be acceptable. The solution is mixed and sampling is performed. The uniform corrosion rate is low under these conditions; a minimum 0.04 inch corrosion allowance is recommended.

2 Pitting Corrosion Analysis

Pitting is localized corrosion of a metal surface that is confined to a point or small area and takes the form of cavities. Chloride is known to cause pitting in acid and neutral solutions. In this vessel, the normal chemistry, pH and temperatures are such that either Type 304L or 316L stainless steel would be acceptable. The vessel is operated such that conditions do not promote localized corrosion. The solution in the vessel is not left stagnant; tank mixing eductors are used to entrain solids and mix the vessel contents.

The chemistry and operating conditions in this vessel fall within the limits established for 300 series stainless steel in Table 1-2 of *WTP Materials Localized Corrosion Design Limits* report, 24590-WTP-RPT-M-11-002. For convenience, this comparison is documented on page 6 of this corrosion evaluation.

3 Crevice Corrosion Analysis

Crevice corrosion is a form of localized corrosion of a metal or alloy surface at, or immediately adjacent to, an area that is shielded from full exposure to the environment because of close proximity of the metal or alloy to the surface of another material or an adjacent surface of the same metal or alloy. Crevice corrosion is similar to pitting in mechanism.

Crevices in this vessel are limited by the design and fabrication practice. All welding uses butt welds, and crevices are limited to wash ring hangers and other internals associated with the mixing eductors. With the stated operating conditions, the 300 series stainless steels will be acceptable.

The chemistry and operating conditions in this vessel fall within the limits established for 300 series stainless steel in Table 1-2 of 24590-WTP-RPT-M-11-002.

4 Stress Corrosion Cracking Analysis

Stress corrosion cracking (SCC) is the cracking of a material produced by the combined action of corrosion and sustained tensile stress (residual or applied). The exact amount of chloride required to cause stress corrosion cracking is unknown. In part this is because the amount varies with temperature, metal sensitization, the environment, and also because chloride tends to concentrate under heat transfer conditions, by evaporation, and electrochemically during a corrosion process. Hence, even concentrations as low as 10 ppm can lead to cracking under some conditions. Generally, as seen in Sedriks (1996) and Davis (1987), stress corrosion cracking does not usually occur below about 140 °F for sensitized alloys. With the proposed normal conditions, a 300 series stainless steel is expected to be acceptable.

The chemistry and operating conditions in this vessel fall within the limits established for 300 series stainless steel in Table 1-2 of 24590-WTP-RPT-M-11-002.

CORROSION EVALUATION

5 End Grain Corrosion Analysis

End grain corrosion is preferential corrosion which occurs along the cold working direction of wrought stainless steels when exposed to highly oxidizing acidic conditions. End grain corrosion is exclusive to metallic product forms with exposed end grains from shearing or mechanical cutting. Such conditions are not present in the pressure boundary design and nozzles; vessels are all butt-weld joints. End grain corrosion is not a concern for the vessel pressure boundary materials.

6 Weld Corrosion Analysis

Corrosion at the welds includes both the weld heat affected zone (HAZ) and filler metal. Corrosion depends on the base metal chemistry, welding parameters and filler metal chemistry. The normal uniform corrosion is influenced by the microstructural changes to the alloy. The microstructural changes that contribute to corrosion are solidification micro-segregation that transforms to precipitates, grain boundary coarsening, and carbide precipitation at the grain boundaries. These metallurgical conditions are mitigated by project controls placed on welding parameters and filler metal chemistry. The low carbon content in austenitic stainless steels and nickel alloys prevent base metal sensitization during welding. Controls on the cover gas, heat input, and interpass temperature limit the heat tint. Matching filler metal should be selected. Corrosion at welds is not considered a problem in the proposed environment. Providing correct weld procedures are followed, no preferential corrosion of weld beads or heat-affected zones occurs in nitric acid or alkaline based stream. No additional allowance is made for weld bead corrosion.

7 Microbiologically Influenced Corrosion Analysis

Microbiologically influenced corrosion (MIC) refers to corrosion affected by the presence or activity, or both, of microorganisms. Typically, with the exception of cooling water systems, MIC is not observed in operating systems. The proposed operating conditions are not ideal for microbial growth; therefore, the potential for MIC in the vessels is small.

8 Fatigue/Corrosion Fatigue Analysis

Fatigue is the process of progressive localized permanent structural change occurring in a material subjected to fluctuating stresses at less than the ultimate tensile strength of the material. Corrosion fatigue is the process wherein a metal fractures prematurely under conditions of simultaneous corrosion and repeated cyclic loading at lower stress levels or fewer cycles than would be required to cause fatigue of that metal in the absence of the corrosive environment. Corrosion fatigue is not an issue because the number of loading cycles for the operation window is limited and low. The number of thermal cycles (room temperature to 126 °F max) is also low.

9 Vapor Phase Corrosion Analysis

Conditions in the vapor phase and at the vapor/liquid interface can be different than those present in the liquid. The vapor space corrosion is self-limiting due to the passive film. Also, the layers of deposited corrosion product on top of the passive film act as barriers that reduce mass transport necessary for corrosion. Corrosion rates of materials exposed to vapors in the headspace are never greater than the corrosion during immersion service. The corrosion at the liquid air interface (LAI) is an oxygen-concentration cell resulting from the alternate wetting and drying occurring at the interface. Vessels that operate at the same liquid level and form a surface crust are more susceptible to LAI corrosion. Corrosion at the LAI could be similar to immersion service and not greater. WTP vessels also have the protective passive film at the LAI which reduces corrosion. Further, the liquid level fluctuates between the minimum and maximum level, rather than maintaining a constant level. As compared to the corrosion in the immersion section, the corrosion rates in the vapor space are lower. Vapor phase corrosion is not a concern.

10 Erosion Analysis

Erosion is the progressive loss of material from a solid surface resulting from mechanical interaction between that surface and a fluid, a multi-component fluid, or solid particles carried with the fluid. Velocities within the vessel are expected to be below 12 ft/s. Erosion allowance of 0.004 inch for Type 304L and 316L stainless steel components with solids content less than 2 wt% at velocities below 12 ft/s is based on 24590-WTP-M0C-50-00004, *Wear Allowance for WTP Waste Slurry Systems*.

The recommended general erosion wear allowance provides sufficient protection for erosion of the vessel walls. Conditions do not suggest that localized erosion will occur; therefore, no localized erosion allowance is necessary for the vessel.

11 Galling of Moving Surfaces Analysis

Where two metals are moving in contact with each other without lubrication, there is a risk of damage to their surfaces. No moving unlubricated surfaces are present within the vessel; therefore, galling is not a concern.

12 Fretting/Wear Analysis

Fretting corrosion refers to corrosion damage caused by a slight oscillatory slip between two surfaces. Similar to galling but at a much smaller movement, the corrosion products and metal debris break off and act as an abrasive between the surfaces, producing a classic three body wear problem. This damage is induced under load and repeated relative surface motion. Conditions which lead to fretting are not present in this vessel; therefore, fretting is not a concern.

CORROSION EVALUATION

13 Galvanic Corrosion Analysis

Galvanic corrosion is accelerated corrosion caused by the potential difference between the two dissimilar metals in an electrolyte. A potential difference of greater than 200 mV is necessary to drive corrosion. One material becomes the anode and the other the cathode. Corrosion occurs on the anode material at the interface where the potential gradient is the greatest. The potential difference for any combination of alloys used in these vessels is not sufficient for galvanic currents to overcome the passive protective film. Therefore, it can be stated that conditions which lead to galvanic corrosion are not present in this vessel.

14 Cavitation Analysis

Cavitation is the formation and rapid collapse of cavities or bubbles of vapor or gas within a liquid resulting from mechanical or hydrodynamic forces. Cavitation is typically associated with pumps and orifice plates; this vessel has neither. The alloys selected display a superior resistance to cavitation, and WTP vessel design limits conditions which lead to cavitation; therefore, cavitation is not a concern.

15 Creep Analysis

Creep is time-dependent strain occurring under stress and is described as plastic flow, yielding at stresses less than the yield strength. Creep is only experienced in plants operating at high temperatures. Temperatures much greater than one half the absolute melting temperature of the alloy are necessary for thermally activated creep to become a concern. The vessel operating and design temperatures are too low to lead to creep; therefore, creep is not a concern.

16 Inadvertent Nitric Acid Addition

At this time, the design does not provide for the regular use of nitric acid reagent in this system. Addition of nitric acid into the system would require operator intervention to complete the routing. Nitric acid is a known inhibitor solution for austenitic stainless steels and nickel-based alloys. The presence of nitric acid is not a concern for the stainless steel; especially at the operating temperatures listed.

17 Conclusion and Justification

The conclusion of this evaluation is that DEP-VSL-00004A/B can be fabricated from Type 304L or Type 316L and are capable of providing 40 years of service. Based on the expected operating conditions, the 300 series stainless steel is expected to be satisfactorily resistant to uniform and localized corrosion. The expected uniform corrosion loss over 40 years is 0.024 inch. The expected uniform erosion loss over 40 years is 0.004 inch. A total general corrosion and erosion allowance of 0.04 inch is recommended and is sufficient.

Comparison of the process conditions documented in 24590-BOF-RPT-PR-15-001 against the localized corrosion design limits for 300 series stainless steel documented in 24590-WTP-RPT-M-11-002, demonstrates that the PCDS values, which take into account conditions at contract maximum values, are within the applicable limits. Conditions do not suggest that localized erosion will occur; therefore, no localized erosion allowance is necessary for the vessel.

Sections of the issued Process Corrosion Data report (PCDS) (attached to the corrosion evaluation) include several references to the *Process Inputs Basis of Design (PIBOD) for LAW and EMF*, 24590-WTP-DB-PET-17-001 which was not issued at the time the PCDS was issued. The PIBOD for LAW and EMF has been issued. Any variance in the values between the PIBOD and PCDS associated with streams and stream characteristics used to evaluate corrosion and erosion have been reviewed and evaluated. The evaluation concluded that the analysis described in this corrosion evaluation was bounding and the material selection recommendations remain as initially issued.

18 Margin

The system is designed with a uniform corrosion allowance of 0.04 inch based on the range of inputs, system knowledge, handbooks, literature, and engineering judgment/experience. The service conditions described above result in a predicted loss due to uniform corrosion and erosion of 0.028 inches. The specified minimum corrosion allowance (0.04 inch) exceeds the minimum required corrosion allowance specified in the input calculations; therefore, margin is provided. The uniform corrosion design margin for the operating conditions is sufficient to expect a 40 year operating life and is justified in the referenced calculations.

The recommended general erosion wear allowance of 0.004 inch provides sufficient protection for erosion of the vessel shell. The margin in the erosive wear allowances used above is contained in the referenced calculations (24590-WTP-M0C-50-00004 and 24590-WTP-M0E-50-00012). No additional localized erosion requirement has been identified for these vessels.

The maximum operating parameters for these vessels are defined in the PCDS. As shown in the table on the following page, the PCDS calculated pH, chemistry, and temperature are bounded by the materials localized corrosion design limits documented in the WTP Materials Localized Corrosion Design Limits report. The difference between the design limits and the operating maximums (PCDS value) is the localized corrosion design margin and, based on the operating conditions, is sufficient to expect a 40 year operating life. The Overhead Sampling Vessels, DEP-VSL-00004A/B, are protected from localized corrosion (pitting, crevice, and stress corrosion) by operating within the acceptable range of the design limits. Operational and process restriction will be used to ensure the limits are maintained.

CORROSION EVALUATION

MATERIALS LOCALIZED CORROSION DESIGN LIMITS – Type 304L& 316L				
	Temperature (°F)	pH	Chloride (ppm)	
DESIGN LIMIT	**150 max**	**5 to 10**	**Type 304L 150 max**	**Type 316L 300 max**
Transfer from LVP-TK-00001 (LVP21)	122	9.5	49	
Effluent to DEP-VSL-00005A/B (DEP01)	126	9.5	36	
Inlet Vessels to DEP-VSL-00004A/B	**Temperature (°F)**	**pH**	**Chloride (ppm)**	
DESIGN LIMIT	**150 max**	**5 to 10**	**Type 304L 150 max**	**Type 316L 300 max**
Condensate to DEP-VSL-00004A/B (DEP04)	143	7.0	29	

Inlet vessels to DEP-VSL-00004A/B based on 24590-BOF-RPT-PR-15-001, Figure 8.

References sources for this table:

1) Design limits - 24590-WTP-RPT-M-11-002, Table 1-3
2) LVP-TK-00001 transfer (LVP21 similar to LVP17) - 24590-WTP-RPT-PR-04-0001-04, *WTP Process Corrosion Data - Volume 4, Figure C-39*
3) DEP-VSL-00004A/B (DEP01) - 24590-BOF-RPT-PR-15-001, *Direct Feed LAW Process Corrosion Data, Figure A-7*
4) DEP condensers (DEP04) - 24590-BOF-RPT-PR-15-001, *Direct Feed LAW Process Corrosion Data, Figure A-5*

CORROSION EVALUATION

19 References:

1. 24590-BOF-3ZD-25-00001, *WTP Direct Feed Low Activity Waste (DFLAW) Facility and System Design Descriptions.*
2. 24590-BOF-MVC-DEP-00007, *Process Data for the Overhead Sampling Vessels (DEP-VSL-00004A/B) and Pumps DEP-PMP-00004A/B).*
3. 24590-BOF-P1-25-00001, *Balance of Facilities LAW Effluent Process Bldg & LAW Effluent Drain Tank Bldg General Arrangement Plan at Elev 0 Ft - 0 In.*
4. 24590-BOF-RPT-PR-15-001, *Direct Feed LAW Process Corrosion Data.*
5. 24590-WTP-DB-PET-17-001, *Process Inputs Basis of Design (PIBOD) for LAW and EMF.*
6. 24590-WTP-M0C-50-00004, *Wear Allowance for WTP Waste Slurry Systems with ECCN 24590-WTP M0E-50-00012.*
7. 24590-WTP-RPT-M-11-002, *WTP Vessel Localized Corrosion Limit Analysis Report.*
8. Davis, JR (Ed), 1987, *Corrosion, Vol 13*, In "Metals Handbook", ASM International, Metals Park, OH 44073
9. Sedriks, AJ, 1996, *Corrosion of Stainless Steels*, John Wiley & Sons, Inc., New York, NY 10158

Additional Reading

- 24590-BOF-M6-DEP-00004001, *P&ID - BOF/EMF Direct Feed LAW EMF Process System Overhead Sampling Vessel - DEP-VSL-00004A.*
- 24590-BOF-M6-DEP-00004002, *P&ID - BOF/EMF Direct Feed LAW EMF Process System Overhead Sampling Vessel - DEP-VSL-00004B.*
- 24590-BOF-MVD-DEP-00005, *Mechanical Data Sheet - 24590-BOF-MV-DEP-VSL-00004A/00004B - Overhead Sampling Vessel.*
- 24590-WTP-RPT-M-04-0008, *Evaluation of Stainless Steel and Nickel Alloy Wear Rates in WTP Waste Streams at Low Velocities.*
- CCN 130170, Blackburn, LD to PG Johnson, Internal Memo, Westinghouse Hanford Co, *Evaluation of 240-AR Chloride Limit*, August 15, 1991.
- CCN 130171, Ohl, PC to PG Johnson, Internal Memo, Westinghouse Hanford Co, *Technical Bases for Cl- and pH Limits for Liquid Waste Tank Cars*, MA: PCO:90/01, January 16, 1990.
- CCN 130172, Divine, JR, 1986, Letter to A.J. Diliberto, *Reports of Experimentation*, Battelle, Pacific Northwest Laboratories, Richland, WA 99352.
- CCN 130173, Dillon, CP (Nickel Development Institute), Personal Communication to J R Divine (ChemMet, Ltd., PC), 3 Feb 2000.
- Agarwal, DC, *Nickel and Nickel Alloys*, In: Revie, WW, 2000. *Uhlig's Corrosion Handbook*, 2nd Edition, Wiley-Interscience, New York, NY 10158.
- Danielson, MJ & SG Pitman, 2000, *Corrosion Tests of 316L and Hastelloy C-22 in Simulated Tank Waste Solutions*, PNWD-3015 (BNFL-RPT-019, Rev 0), Pacific Northwest Laboratory, Richland WA.
- Davis, JR (Ed), 1994, *Stainless Steels*, In ASM Metals Handbook, ASM International, Metals Park, OH 44073.
- Hamner, NE, 1981, *Corrosion Data Survey*, Metals Section, 5th Ed, NACE International, Houston, TX.
- Jones, RH (Ed.), 1992, *Stress-Corrosion Cracking*, ASM International, Metals Park, OH 44073.
- Koch, GH, 1995, *Localized Corrosion in Halides Other Than Chlorides*, MTI Pub No. 41, Materials Technology Institute of the Chemical Process Industries, Inc, St Louis, MO 63141.
- NIDI. *Preventing Stress Corrosion Cracking of Austenitic Stainless Steels in Chemical Plants*, Publication No. 10066, Nickel Development Institute. Toronto, Ontario, Canada.
- Phull, BS, WL Mathay, & RW Ross, 2000, *Corrosion Resistance of Duplex and 4-6% Mo-Containing Stainless Steels in FGD Scrubber Absorber Slurry Environments*, Presented at Corrosion 2000, Orlando, FL, March 26-31, 2000, NACE International, Houston TX 77218.
- Uhlig, HH, 1948, *Corrosion Handbook*, John Wiley & Sons, New York, NY 10158.
- Van Delinder, LS (Ed), 1984, *Corrosion Basics*, NACE International, Houston, TX 77084.
- Wilding, MW & BE Paige, 1976, *Survey on Corrosion of Metals and Alloys in Solutions Containing Nitric Acid*, ICP-1107, Idaho /National Engineering Laboratory, Idaho Falls, ID.
- Zapp, PE, 1998, *Preliminary Assessment of Evaporator Materials of Construction*, BNF—003-98-0029, Rev 0, Westinghouse Savannah River Co., Inc for BNFL Inc.

CORROSION EVALUATION

PROCESS CORROSION DATA SHEET (extract)

Component(s) (Name/ID #) **Overhead Sampling Vessels (DEP-VSL-00004A/B)**

Facility **EMF**

In Black Cell? **NO**

		Stream ID LVP21
Chemicals	Unit	**AQUEOUS**
Cations (ppm)		
Al^{+3} (Aluminum)	ppm	0
Fe^{+3} (Iron)	ppm	0
Hg^{+2} (Mercury)	ppm	0
Pb^{+2} (Lead)	ppm	0
Anions (ppm)		
Cl^- (Chloride)	ppm	49
CO_3^{-2} (Carbonate)	ppm	5352
F^- (Fluoride)	ppm	15
NO_2^- (Nitrite)	ppm	0
NO_3^- (Nitrate)	ppm	1
PO_4^{-3} (Phosphate)	ppm	0
SO_4^{-2} (Sulfate)	ppm	30
$OH(aq)^-$	ppm	36
$OH(s)^-$	ppm	0
pH		9.50
Suspended Solids	wt%	0
Temperature	°F	122
Liquid Density* (max)	lb/ft3	68.6

* LVP21 conditions based on stream LVP17, 24590-WTP-RPT-PR-04-0001-04, Section 6.6.3.1.14

CORROSION EVALUATION

24590-BOF-RPT-PR-15-001, Rev 0
Direct Feed LAW Process Corrosion Data

Figure A-7 DEP-VSL-00004A/B Aqueous PCDS

	DEP04	LVP21	DEP01
Maximum Properties			
Suspended Solids [wt %]	0 (2)	0 (5)	0 (6)
Total Salts [wt %]	TBD (2)	TBD (1)	TBD (1)
Sodium Molarity [M]	TBD (2)	TBD (1)	TBD (1)
Relative Humidity [%]	n/a (2)	n/a	n/a
pH	7.00 (2)	9.50 (7)	9.50 (7)
Anti-Foam Agent [ppm]	TBD (2)	TBD (1)	TBD (1)
TOC [lbm/hr]	TBD (2)	TBD (1)	TBD (1)
Pressure [psig]	TBD (2)	0 (4)	0 (4)
Temperature [C]	62 (2)	50 (8)	52 (4)
Temperature [F]	143 (2)	122 (8)	126 (4)
Water Flow Rate [lbm/hr]	TBD (2)	TBD (1)	TBD (1)
Total Aqueous Flow Rate [lbm/hr]	TBD (2)	TBD (1)	TBD (1)
Total Flow Rate [lbm/hr]	TBD (2)	TBD (1)	TBD (1)
UserNote	Evaporator Condensate	Transfer from LVP-TK-1 to DEP-VSL-4A/B	Transfer from DEP-VSL-4A/B to DEP-VSL-5A/B

	DEP04 (2)	LVP21 (9)	DEP01 (3)
	Aqueous concentration, ppm (mg/kg)		
Cations			
Ag+	0	0	0
Al+3	0	0	0
Am+3	0	0	0
As+5	0	0	0
B+3	1	0	0
Ba+2	0	0	0
Be+2	0	0	0
Bi+3	0	0	0
Ca+2	0	0	0
Cd+2	0	0	0
Ce+4	0	0	0
Co+2	0	0	0
Cr+3	0	0	0
Cr+6	0	0	0
Cs+	0	0	0
Cu+2	0	0	0
Eu+3	0	0	0
Fe+2	0	0	0
Fe+3	0	0	0
H+	0	0	0
Hg+2	0	0	0
K+	0	0	0
La+3	0	0	0
Li+	1	0	0
Mg+2	0	0	0
Mn+4	0	0	0
Mo+6	0	0	0
Na+	1	3976	1094
Nd+3	0	0	0
Ni+2	0	0	0
Pb+2	0	0	0
Pd+2	0	0	0
Pr+4	0	0	0
Pu+4	0	0	0
Ra+2	0	0	0
Rb+	0	0	0
Rh+3	0	0	0
Ru+4	0	0	0
Sb+3	0	0	0
Se+4	0	0	0
Si+4	0	0	0
Sr+2	0	0	0
Ta+5	0	0	0
Tc+4	0	0	0
Te+4	0	0	0
Th+4	0	0	0
Ti+4	0	0	0
Tl+5	0	0	0
U+4	0	0	0
V+3	0	0	0
W+6	0	0	0
Y+3	0	0	0
Zn+2	0	0	0
Zr+4	0	0	0
Anions			
B(OH)4-	0	0	0
C2O4-2	0	0	0
Cl-	29	49	36
CN-	0	0	0
CO3-2	0	5352	1473
F-	1	15	6
H2PO4-	0	0	0
H2SiO4-2	1	0	1
H3SiO4-	1	0	0
HCO3-	0	0	0
HPO4-2	0	0	0
HSO3-	0	0	0
HSO4-	1	0	1
I-	0	0	0
IO3-	0	0	0
NH4+	0	229	74
NO2-	0	0	0
NO3-	1	1	1
O-2	3	0	2
O2-2	0	0	0
OH(aq)-	0 (2)	36 (10)	10 (3)
OH(s)-	0	0	0
PO4-3	0	0	0
SO3-2	0	98	27
SO4-2	1	30	9
Organics			
AFA_DCMP	0	0	0
AFA_NVOC	0	0	0
NVOC	0	0	0
Sucrose	0	0	0
SVOC	22	0	16
VOC	1	1	1

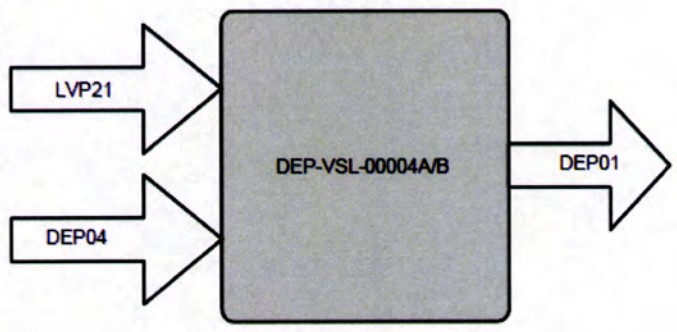

Notes: (1) Values marked as "TBD" will be provided in the revision to 24590-BOF-M4C-V11T-00004 (Ref. 5.1.4(2)) based on APPS model runs for corrosion
(2) DEP04 values from DEP-COND-00001/2/3 and DEP-FILT-00004A/B PCDS reported in Figure A-5 including aqueous concentrations
(3) Concentration values for DEP01 are the same as DEP20 (as shown in Figure A-8), since DEP01 is the only inlet stream to DEP-VSL-00005A/B included in the analysis from Ref. 5.1.4(2)
(4) Maximum vessel property per 24590-BOF-MVC-DEP-00007 (Ref. 5.1.4(4), Section 8)
(5) The solids concentration for the caustic scrubber effluent from LVP-TK-00001 is negligible (Ref. 5.1.1(12), Section 6.6.3.2.1)
(6) Suspended solids in DEP01 are negligible, due DEP04 and LVP21 both having negligible suspended solids.
(7) The maximum pH of DEP-VSL-00004A/B and DEP-VSL-00005A/B on the PCDSs is 9.5, based on the pH range of 9 to 9.5 for caustic scrubber effluent provided in Ref. 5.1.1(12), Section 6.6.3.2.1
(8) Maximum temperature for stream LVP21 per Ref. 5.1.1(12), Section 6.6.3.2.1
(9) Maximum concentrations of all COCs except OH(aq)- in governing stream LVP21 per Ref. 5.1.4(2) Table 8-5
(10) MINIMUM OH(aq)- value for governing stream LVP21 per Ref. 5.1.4(2) Table 8-5

GENERAL NOTE FOR USE OF PCDS:

- *The information provided by the PCDS report is intended solely for use in support of the vessel material selection process and Corrosion Evaluations. The inputs, assumptions, and computational/engineering models used in generating the results presented herein are specific to this effort. Use of the information presented herein for any other purpose will require separate consideration and analysis to support justification of its use for the desired, alternative purpose.*
- *The process descriptions in this report cover routine process operations and non-routine (infrequent) process operations, when such exist, that could impact corrosion or erosion of process equipment.*
- *The process descriptions provided in this report are for general information and reflective of the corrosion engineer's analysis for transparency, the information is current only at the time this document is issued. These process descriptions should not be referenced for design.*

4.7 Overhead Sampling Vessels (DEP-VSL-00004A/B)

4.7.1 Description of Vessels

DEP-VSL-00004A/B receive condensate from the evaporator, caustic scrubber fluids from the LAW LVP system, and sump pump discharge from DEP-SUMP-00002A/B, DEP-SUMP-00004A/B, NLD-SUMP-00031, and NLD-SUMP-00032.

Overhead Sampling Vessel Transfer Pumps (DEP-PMP-00004A/B/C) are used to recirculate DEP-VSL-00004A/B contents to a sample connection where samples are collected and fluid is returned to the tank through the eductors. Each batch is sampled and characterized before sending to the process condensate lag storage vessels (DEP-VSL-00005A/B). Off-spec condensate in DEP-VSL-00004A/B can be recycled to DEP-VSL-00002. In the event of an overflow, the liquid will flow by gravity into DEP-VSL-00001.

The vessel contents can be sampled and the vessel are monitored for level, pressure, and temperature.

The Overhead Sampling Vessels are equipped with Overhead Sampling Vessel Mixing Eductors (DEP-EDUC-00006/7/8/9) to homogenize the contents and allow a representative sample to be taken.

DEP-VSL-00004A/B are passively purged with air drawn through the vessel head space and are vented to the Vessel Vent Header. Vessel vent streams are described in Section 4.10. This vessel will have capability to add process service water (PSW) for washing.

Figure 8 is a sketch of the input and output arrangement of streams for DEP-VSL-00004A/B.

Figure 8 – DEP-VSL-00004A/B Sketch

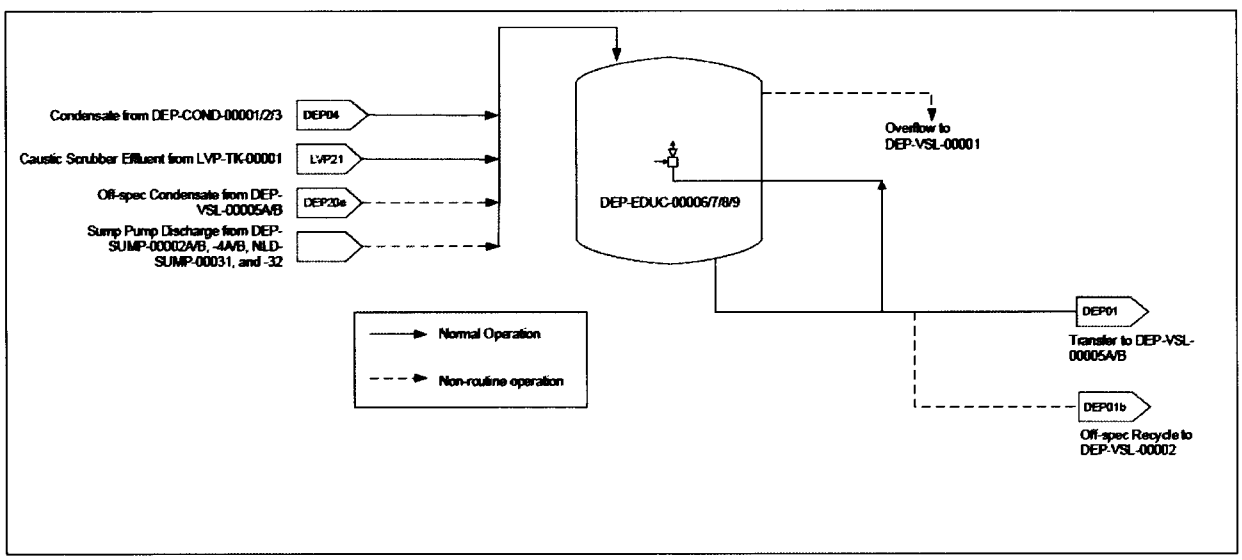

4.7.2 System Functions

The process functions of DEP-VSL-00004A/B are as follows:

- Receive inlet streams
- Mix process fluids
- Store process fluids
- Transfer process fluids

The equipment performs additional system functions beyond the process functions. but these additional functions are beyond the scope of this document. These functions are not discussed any further in this document. however are listed below for completeness.

- Confine collected effluents
- Sample collected effluents
- Flush system components
- Report system conditions

4.7.3 Description of Process Functions for DEP-VSL-00004A/B

4.7.3.1 Receipt Streams

The following process streams taken from PFD 24590-BOF-M5-V17T-00011 (Ref. 5.1.3(1)) and P&IDs 24590-BOF-M6-DEP-00004001 (Ref. 5.1.3(19)) and 24590-BOF-M6-DEP-00004002 (Ref. 5.1.3(20)) are inputs to DEP-VSL-00004A/B.

- DEP04 – Condensate from DEP-COND-00001/2/3
- LVP21 – Caustic Scrubber Effluent from LVP-TK-00001
- DEP20e - Off-spec Condensate from DEP-VSL-00005A/B
- Sump Pump Discharge from DEP-SUMP-00002A/B. -4A/B. NLD-SUMP-00031. and -32

4.7.3.1.1 DEP04 – Condensate from DEP-COND-00001/2/3

The properties of Stream DEP04 have been previously described in Section 4.4.3.2.3.1.

4.7.3.1.2 LVP21 – Caustic Scrubber Effluent from LVP-TK-00001

LVP21 is the collected caustic scrubber effluent in LVP-TK-00001 that will be transferred to DEP-VSL-00004A/B during DFLAW operation. LVP21 is an existing WTP process stream. The properties for LVP21 were provided previously in Ref. 5.1.1(12) Section 6.6.3.2.1.

4.7.3.1.3 DEP20e - Off-spec Condensate from DEP-VSL-00005A/B

DEP-VSL-00004A/B can receive off-spec condensate from DEP-VSL-00005A/B.

This is a non-routine operation and is not modeled in the APPS model. Therefore. the stream is not discussed any further in this document.

4.7.3.1.4 Sump Pump Discharge from DEP-SUMP-00002A/B, -4A/B, NLD-SUMP-00031, and -32

DEP-VSL-00004A/B can receive the effluent from the sumps DEP-SUMP-00002A/B. DEP-SUMP-00004A/B. NLD-SUMP-00031. and NLD-SUMP-00032.

This is a non-routine operation and is not modeled in the APPS model. Therefore. the stream is not discussed any further in this document.

4.7.3.2 Store Liquid Effluents

DEP-VSL-00004A/B normally receives evaporator condensate and caustic scrubber effluent. The contents of the EMF utility room sump can also be received on a non-routine basis.

4.7.3.3 Mix Liquid Effluents

Mixing is accomplished in DEP-VSL-00004A/B using eductors (DEP-EDUC-00006/7/8/9) connected to a recirculation loop. Mixing helps provide a homogeneous mixture prior to sampling and transfer from the vessel.

4.7.3.4 Transfer Process Fluids

The following process streams taken from PFD 24590-BOF-M5-V17T-00011 (Ref. 5.1.3(1)) and P&ID 24590-BOF-M6-DEP-00004003 (Ref. 5.1.3(21)) are outputs from DEP-VSL-00004A/B.

- DEP01 – Transfer to DEP-VSL-00005A/B
- DEP01b - Off-spec recycle to DEP-VSL-00002
- Overflow to DEP-VSL-00001

4.7.3.4.1 DEP01 – Transfer to DEP-VSL-00005A/B

DEP01 is the main effluent from DEP-VSL-00004A/B transferred to DEP-VSL-00005A/B. which are lag storage vessels prior to transferring the condensate waste stream to LERF/ETF.

Molarity
The minimum sodium molarity for DEP01 is 0M based on the vessel inlet streams. DEP04 (Section 4.7.3.1.1) and LVP21 (Section 4.7.3.1.2). The range for sodium molarity in stream DEP01 during normal operations will be established in the DFLAW PIBOD.

Temperature
The minimum. normal. and maximum temperatures for stream DEP01 are 40°F. 115°F. and 126°F respectively. based on the properties of DEP-VSL-00004A/B (24590-BOF-MVC-DEP-00007. Section 8. Ref. 5.1.4(4)).

Solids Concentration
The minimum solids concentration for DEP01 is 0 wt % based on the vessel inlet streams. DEP04 (Section 4.7.3.1.1) and LVP21 (Section 4.7.3.1.2). The range for solids concentration in stream DEP01 during normal operations will be established in the DFLAW PIBOD.

CORROSION EVALUATION

Density
The minimum, normal, and maximum density for stream DEP01 is 61.6 lb/ft^3, 63.5 lb/ft^3, and 65.8 lb/ft^3 respectively, based on the properties of DEP-VSL-00004A/B (Ref. 5.1.4(4), Section 8).

pH
The range for pH in stream DEP01 during normal operations will be established in the DFLAW PIBOD.

4.7.3.4.2 DEP01b - Off-spec Recycle to DEP-VSL-00002

If sampling shows the contents of DEP-VSL-00004A/B do not meet the requirements for transfer to LERF/ETF, then the contents can be recycled to DEP-VSL-00002.

This stream is considered non-routine and is not modeled in APPS. Therefore, it will not be discussed further in this document.

4.7.3.4.3 Overflow to DEP-VSL-00001

DEP-VSL-00004A/B overflows through a gravity drain line that connects to the DEP vessel overflow collection header, which empties into DEP-VSL-00001. The vessel overflow is a non-routine condition that is not included in the APPS model and is not discussed further in this document.

4.7.4 Process Modes

4.7.4.1 Normal Operations

Based on the assessment of streams frequently transferred in and out of DEP-VSL-00004A/B, the following processing modes are considered:

Inlet streams:
- DEP04 – Condensate from DEP-COND-00001/2/3
- LVP21 – Caustic Scrubber Effluent from LVP-TK-00001

Outlet streams:
- DEP01 – Transfer to DEP-VSL-00005A/B

Section 4.7.5.1 summarizes these processing modes in tabular form.

4.7.4.2 Infrequent Operations

Based on the assessment of streams infrequently transferred in and out of DEP-VSL-00004A/B, the following processing modes are not considered:

Inlet streams:
- DEP20e - Off-spec Condensate from DEP-VSL-00005A/B
- Sump Pump Discharge from DEP-SUMP-00002A/B, -4A/B, NLD-SUMP-00031, and -32

Outlet streams:
- DEP01a - Off-spec Recycle to DEP-VSL-00002

- Overflow to DEP-VSL-00001

4.7.5 Summary of Processing Conditions for DEP-VSL-00004A/B

4.7.5.1 Normal Operations

The following table summarizes the normal process streams for DEP-VSL-00004A/B.

Table 4-10 - DEP-VSL-00004A/B Normal Operations

	Na Molarity (mol/L)			Temperature (°F)			UDS (wt%)		
Stream Number	Low	Normal	Upper	Low	Normal	Upper	Low	Normal	Upper
DEP04	0	TBD	TBD	TBD	109	TBD	0	0	0
LVP21	LVP21 properties provided in Ref. 5.1.1(12) Section 6.6.3.2.1.								
DEP01	0	TBD	TBD	40	115	126	0	0	0

Note 1 - The maximum sodium molarity will be higher due to potential 5M NaOH addition in this vessel for pH control.

CORROSION EVALUATION

ISSUED BY
RPP-WTP PDC
R11888351

DEP-VSL-00005A/B
Process Condensate Lag Storage Vessel A & B

Appurtenances
DEP-VSL-00005A
DEP-EDUC-00010 thru DEP-EDUC-00013
DEP-VSL-00005B
DEP-EDUC-00014 thru DEP-EDUC-00017

Contents of this document are Dangerous Waste Permit affecting

Results

Materials Considered

Material (UNS No.)	Acceptable Material
Type 304L (S30403)	X
Type 316L (S31603)	X
AL-6XN® 6% Mo (N08367)	X
Hastelloy® C-22® (N06022)	X

Recommended Material Type: **Vessel – Type 304 or Type 316 (max 0.030% C; dual certified)**
Internals – Type 304 or Type 316 (max 0.030% C; dual certified)

Minimum Corrosion Allowance: **0.040 inch (includes 0.024 inch corrosion allowance and 0.004 inch general erosion allowance)**

Inputs and References

- Operating temperature (°F) (nom/max): 83/125 (24590-BOF-MVC-DEP-00008)
- Design corrosion allowance (inch): 0.040 (24590-WTP-M0C-50-00004)
- Uniform corrosion allowance (inch): 0.024 (24590-WTP-M0E-50-00012)
- Uniform erosion allowance (inch): 0.004 (24590-WTP-M0C-50-00004)
- Location: Room E-0106 (24590-BOF-P1-25-00001)
- Operating conditions are as stated in the applicable section of *Direct Feed LAW Process Corrosion Data* (24590-BOF-RPT-PR-15-001)

Assumptions and Justification (refer to Section 19—References)

- Source data presented on the Process Corrosion Datasheet (PCDS) are conservative with respect to corrosion.[4]
- The Process Condensate Lag Storage Vessels (DEP-VSL-00005A/B) are exposed to outside temperatures and, therefore, require insulation to prevent freezing.[2]
- The vessels have internal spray mechanisms for internal vessel washing to facilitate the removal of contamination and prevent the buildup of solids on the walls.[1]
- Design Sampling capability is available in the Process Condensate Lag Storage vessels to monitor effluent acceptability to Liquid Effluent Retention Facility / Effluent Treatment Facility (LERF/ETF) specification in 24590-WTP-ICD-MG-01-006, *ICD 06 – Interface Control Document for Radioactive, Dangerous Liquid Effluents.*[2]
- The DEP process vessels handling radioactive waste shall be capable of mixing vessel contents to prevent buildup of settled solids and to ensure the collection of a representative sample of vessel contents.[1]

Operating Restrictions

- To protect against localized corrosion in the vessel and transfer piping, develop procedure to bring the vessel contents to within the limits defined for 300 series stainless steel in 24590-WTP-RPT-M-11-002, *WTP Materials Localized Corrosion Design Limits,* in the event that temperature, pH, or chloride concentration exceeds those limits.
- Develop a procedure to control, at a minimum, cleaning, rinsing, and flushing of vessel and internals, as applicable.
- Develop procedure to control lay-up and storage; includes both before plant is operational and during inactive periods after start-up.
- Procedures are to be reviewed and accepted by MET prior to use.

Some information on all pages may appear to be illegible, however, the information necessary for assuring adequate design is legible.

Concurrence TD
Operations

REV	DATE	REASON FOR REVISION	ORIGINATE	CHECK	REVIEW	APPROVE
1	3/29/18	Revised sect 17 to discuss DFLAW PIBOD properties Update operating temperature	Originator By: Debbie Adler - dladler Org Name: MET Placed: Mar 29, 2018	Checked By: Steven Vail - swvail Org Name: BNI Placed: Mar 29, 2018 SWVail	RBDavis	TErwin
0	10/11/16	Initial Issue	DLAdler	APRangus	RBDavis	TErwin

CORROSION EVALUATION

Please note that source, special nuclear and byproduct materials, as defined in the Atomic Energy Act of 1954 (AEA), are regulated at the U.S. Department of Energy (DOE) facilities exclusively by DOE acting pursuant to its AEA authority. DOE asserts, that pursuant to the AEA, it has sole and exclusive responsibility and authority to regulate source, special nuclear, and byproduct materials at DOE-owned nuclear facilities. Information contained herein on radionuclides is provided for process description purposes only.

This bound document contains a total of 14 sheets.

CORROSION EVALUATION

Corrosion/Erosion Detailed Discussion

DEP-VSL-00005A/B receive multiple batches from DEP-VSL-00004A/B. DEP-VSL-00005A/B also receive secondary steam blowdown from SCW-VSL-00054 and sump transfers from DEP-SUMP-00003A/B and DEP-SUMP-00005A/B. These vessels allow for lag storage and characterization before sending to the LERF/ETF. In the event of an overflow, the liquid will flow by gravity into DEP-VSL-00001.

Process Condensate Lag Storage Vessel Recirculation Pumps (DEP-PMP-00015A/B) are used to recirculate the vessel contents via eductors to homogenize the contents and allow a representative sample to be taken. Process Concentrate Lag Storage Vessel Transfer Pumps (DEP-PMP-00005A/B) are used to transfer LERF/ETF Lag Storage Vessel contents to LERF/ETF.

1 General/Uniform Corrosion Discussion

a Background

General or uniform corrosion is corrosion that is distributed uniformly over the surface of a material without appreciable localization. This leads to relatively uniform thinning on sheet and plate materials and general thinning on one side or the other (or both) for pipe and tubing. It is recognized by a roughening of the surface and by the presence of corrosion products. The mechanism of the attack is an electrochemical process that takes place at the surface of the material. Differences in composition or orientation between small areas on the metal surface create anodes and cathodes that facilitate the corrosion process.

b Component-Specific Discussion

This vessel receives process condensate from DEP-VSL-00004A/B. The normal pH, chloride concentration, and temperatures are such that a either Type 304L or Type 316L stainless steel is suitable. The solution is mixed using eductors and recirculation so the vessel contents do not remain stagnant. The uniform corrosion rate is low under these conditions. A design corrosion allowance of 0.04 inch is recommended.

2 Pitting Corrosion Analysis

Pitting is localized corrosion of a metal surface that is confined to a point or small area and takes the form of cavities. Chloride is known to cause pitting in acid and neutral solutions. Normally the vessel is to operate at 115 °F (126 °F max) at a pH of 9.5. The vessel is operated such that conditions do not promote localized corrosion. The solution in the vessel is not left stagnant; tank mixing eductors are used to entrain solids and mix the vessel contents.

The chemistry and operating conditions in this vessel fall within the limits established for 300 series stainless steel in Table 1-2 of *WTP Materials Localized Corrosion Design Limits* report, 24590-WTP-RPT-M-11-002. For convenience, this comparison is documented on page 6 of this corrosion evaluation.

3 Crevice Corrosion Analysis

Crevice corrosion is a form of localized corrosion of a metal or alloy surface at, or immediately adjacent to, an area that is shielded from full exposure to the environment because of close proximity of the metal or alloy to the surface of another material or an adjacent surface of the same metal or alloy. Crevice corrosion is similar to pitting in mechanism. With the proposed normal conditions, Type 304L are Type 316L stainless steel are both sufficiently resistant to crevice corrosion.

The chemistry and operating conditions in this vessel fall within the limits established for 300 series stainless steel in Table 1-2 of *WTP Materials Localized Corrosion Design Limits* report, 24590-WTP-RPT-M-11-002.

4 Stress Corrosion Cracking Analysis

Stress corrosion cracking (SCC) is the cracking of a material produced by the combined action of corrosion and sustained tensile stress (residual or applied). The exact amount of chloride required to cause SCC is unknown. In part this is because the necessary concentration varies with temperature, metal sensitization, and the environment; also, chloride tends to concentrate under heat transfer conditions and by evaporation. With the proposed normal conditions, Type 304L are Type 316L stainless steel are both acceptable.

The chemistry and operating conditions in this vessel fall within the limits established for 300 series stainless steel in Table 1-2 of *WTP Materials Localized Corrosion Design Limits* report, 24590-WTP-RPT-M-11-002.

5 End Grain Corrosion Analysis

End grain corrosion is preferential corrosion which occurs along the cold working direction of wrought stainless steels when exposed to highly oxidizing acidic conditions. End grain corrosion is exclusive to metallic product forms with exposed end grains from shearing or mechanical cutting. Such conditions are not present in the pressure boundary design and nozzles; vessels are all butt-weld joints. End grain corrosion is not a concern for the vessel pressure boundary materials.

CORROSION EVALUATION

6 Weld Corrosion Analysis

Corrosion at the welds includes both the weld heat affected zone (HAZ) and filler metal. Corrosion depends on the base metal chemistry, welding parameters and filler metal chemistry. The normal uniform corrosion is influenced by the microstructural changes to the alloy. The microstructural changes that contribute to corrosion are solidification micro-segregation that transforms to precipitates, grain boundary coarsening, and carbide precipitation at the grain boundaries. These metallurgical conditions are mitigated by project controls placed on welding parameters and filler metal chemistry. The low carbon content in austenitic stainless steels and nickel alloys prevent base metal sensitization during welding. Controls on the cover gas, heat input, and interpass temperature limit the heat tint. Matching filler metal should be selected. Corrosion at welds is not considered a problem in the proposed environment. Providing correct weld procedures are followed, no preferential corrosion of weld beads or heat-affected zones occurs in nitric acid or alkaline based stream. No additional allowance is made for weld bead corrosion.

7 Microbiologically Influenced Corrosion Analysis

Microbiologically influenced corrosion (MIC) refers to corrosion affected by the presence or activity, or both, of microorganisms. Typically, with the exception of cooling water systems, MIC is not observed in operating systems. The proposed operating conditions are not ideal for microbial growth; therefore, the potential for MIC in the vessels is small.

8 Fatigue/Corrosion Fatigue Analysis

Fatigue is the process of progressive localized permanent structural change occurring in a material subjected to fluctuating stresses at less than the ultimate tensile strength of the material. Corrosion fatigue is the process wherein a metal fractures prematurely under conditions of simultaneous corrosion and repeated cyclic loading at lower stress levels or fewer cycles than would be required to cause fatigue of that metal in the absence of the corrosive environment. Corrosion fatigue is not an issue because the number of loading cycles for the operation window is limited and low. The number of thermal cycles (room temperature to 126 °F max) is also low.

9 Vapor Phase Corrosion Analysis

Conditions in the vapor phase and at the vapor/liquid interface can be different than those present in the liquid. The vapor space corrosion is self-limiting due to the passive film. Also, the layers of deposited corrosion product on top of the passive film act as barriers that reduce mass transport necessary for corrosion. Corrosion rates of materials exposed to vapors in the headspace are never greater than the corrosion during immersion service. The corrosion at the liquid air interface (LAI) is an oxygen-concentration cell resulting from the alternate wetting and drying occurring at the interface. Vessels that operate at the same liquid level and form a surface crust are more susceptible to LAI corrosion. Corrosion at the LAI could be similar to immersion service and not greater. WTP vessels also have the protective passive film at the LAI which reduces corrosion and the liquid level is constantly changing. As compared to the corrosion in the immersion section, the corrosion rates in the vapor space are lower. Vapor phase corrosion is not a concern.

10 Erosion Analysis

Erosion is the progressive loss of material from a solid surface resulting from mechanical interaction between that surface and a fluid, a multi-component fluid, or solid particles carried with the fluid. Velocities within the vessel are expected to be below 12 ft/s. Solids content is reported as 0 wt%. Erosion allowance of 0.004 inch for Type 304L and 316L stainless steel components with solids content less than 2 wt% at velocities below 12 ft/s is based on 24590-WTP-M0C-50-00004, *Wear Allowance for WTP Waste Slurry Systems*.

The recommended general erosion wear allowance provides sufficient protection for erosion of the vessel walls. Conditions do not suggest that localized erosion will occur; therefore, no localized erosion allowance is necessary for the vessel.

11 Galling of Moving Surfaces Analysis

Where two metals are moving in contact with each other without lubrication, there is a risk of damage to their surfaces. No moving unlubricated surfaces are present within the vessel; therefore, galling is not a concern.

12 Fretting/Wear Analysis

Fretting corrosion refers to corrosion damage caused by a slight oscillatory slip between two surfaces. Similar to galling but at a much smaller movement, the corrosion products and metal debris break off and act as an abrasive between the surfaces, producing a classic three body wear problem. This damage is induced under load and repeated relative surface motion. Conditions which lead to fretting are not present in this vessel.

13 Galvanic Corrosion Analysis

Galvanic corrosion is accelerated corrosion caused by the potential difference between the two dissimilar metals in an electrolyte. A potential difference of greater than 200 mV is necessary to drive corrosion. One material becomes the anode and the other the cathode. Corrosion occurs on the anode material at the interface where the potential gradient is the greatest. The potential difference for any combination of alloys used in these vessels is not sufficient for galvanic currents to overcome the passive protective film. Therefore, it can be stated that conditions which lead to galvanic corrosion are not present in this vessel.

CORROSION EVALUATION

14 Cavitation Analysis

Cavitation is the formation and rapid collapse of cavities or bubbles of vapor or gas within a liquid resulting from mechanical or hydrodynamic forces. Cavitation is typically associated with pumps and orifice plates; this vessel has neither. The alloys selected display a superior resistance to cavitation, and WTP vessel design limits conditions which lead to cavitation; therefore, cavitation is not a concern.

15 Creep Analysis

Creep is time-dependent strain occurring under stress and is described as plastic flow, yielding at stresses less than the yield strength. Creep is only experienced in plants operating at high temperatures. Temperatures much greater than one half the absolute melting temperature of the alloy are necessary for thermally activated creep to become a concern. The vessel operating and design temperatures are too low to lead to creep; therefore, creep is not a concern.

16 Inadvertent Nitric Acid Addition

At this time, the design does not provide for the regular use of nitric acid reagent in this system. Addition of nitric acid into the system would require operator intervention to complete the routing. Nitric acid is a known inhibitor solution for austenitic stainless steels and nickel-based alloys. The presence of nitric acid is not a concern for the stainless steel; especially at the operating temperatures listed.

17 Conclusion and Justification

The conclusion of this evaluation is that DEP-VSL-00005A/B can be fabricated from Type 304L or Type 316L and are capable of providing 40 years of service. Based on the expected operating conditions, the 300 series stainless steel is expected to be satisfactorily resistant to uniform and localized corrosion. The expected uniform corrosion loss over 40 years is 0.024 inch. The expected uniform erosion loss over 40 years is 0.004 inch. A total general corrosion and erosion allowance of 0.04 inch is recommended and is sufficient.

Comparison of the process conditions documented in 24590-BOF-RPT-PR-15-001 against the localized corrosion design limits for 300 series stainless steel documented in 24590-WTP-RPT-M-11-002 demonstrates that the PCDS values, which take into account conditions at contract maximum values, are within the applicable localized corrosion design limits. Conditions do not suggest that localized erosion will occur; therefore, no localized erosion allowance is necessary for the vessel.

Sections of the issued Process Corrosion Data report (PCDS) (attached to the corrosion evaluation) include several references to the *Process Inputs Basis of Design (PIBOD) for LAW and EMF*, 24590-WTP-DB-PET-17-001 which was not issued at the time the PCDS was issued. The PIBOD for LAW and EMF has been issued. Any variance in the values between the PIBOD and PCDS associated with streams and stream characteristics used to evaluate corrosion and erosion have been reviewed and evaluated. The evaluation concluded that the analysis described in this corrosion evaluation was bounding and the material selection recommendations remain as initially issued.

18 Margin

The system is designed with a uniform corrosion allowance of 0.04 inch based on the range of inputs, system knowledge, handbooks, literature, and engineering judgment/experience. The service conditions described above result in a predicted loss due to uniform corrosion and erosion of 0.028 inches. The specified design corrosion allowance (0.04 inch) exceeds the minimum required corrosion allowance specified in the input calculations; therefore, margin is provided. The uniform corrosion design margin for the operating conditions is sufficient to expect a 40 year operating life and is justified in the referenced calculations.

The recommended general erosion wear allowance of 0.004 inch provides sufficient protection for erosion of the vessel shell. The margin in the erosive wear allowances used above is contained in the referenced calculations (24590-WTP-M0C-50-00004 and 24590-WTP-M0E-50-00012). No additional localized erosion requirement has been identified for these vessels.

The maximum operating parameters for these vessels are defined in the PCDS. As shown in the table below, the PCDS calculated pH, chemistry, and temperature are bounded by the materials localized corrosion design limits documented in the WTP Materials Localized Corrosion Design Limits report. The difference between the design limits and the operating maximums (PCDS value) is the localized corrosion design margin and, based on the operating conditions, is sufficient to expect a 40 year operating life. The Process Condensate Lag Storage Vessels, DEP-VSL-00005A/B, are protected from localized corrosion (pitting, crevice, and stress corrosion) by operating within the acceptable range of the design limits. Operational and process restriction will be used to ensure the limits are maintained.

CORROSION EVALUATION

MATERIALS LOCALIZED CORROSION DESIGN LIMITS – Type 304L& 316L				
	Temperature (°F)	**pH**	**Chloride (ppm)**	
DESIGN LIMIT	**150 max**	**5 to 10**	**Type 304L 150 max**	**Type 316L 300 max**
Condensate to LERF/ETF (DEP20)	120	9.5	36	
[redacted]				
Inlet Vessels to DEP-VSL-00005A/B	**Temperature (°F)**	**pH**	**Chloride (ppm)**	
DESIGN LIMIT	**150 max**	**5 to 10**	**Type 304L 150 max**	**Type 316L 300 max**
Condensate from DEP-VSL-00004A/B (DEP01)	126	9.5	36	
[redacted]				

Inlet vessels to DEP-VSL-00005A/B based on 24590-BOF-RPT-PR-15-001, Figure 9.

References sources for this table:

1) Design limits - 24590-WTP-RPT-M-11-002, Table 1-2
2) Transfer to LERF/ETF (DEP20) - 24590-BOF-RPT-PR-15-001, *Direct Feed LAW Process Corrosion Data, Figure A-8*
3) DEP-VSL-00004A/B (DEP01) - 24590-BOF-RPT-PR-15-001, *Direct Feed LAW Process Corrosion Data, Figure A-7*

CORROSION EVALUATION

19 References:

1. 24590-BOF-3ZD-25-00001, *WTP Direct Feed Low Activity Waste (DFLAW) Facility and System Design Descriptions.*
2. 24590-BOF-MVC-DEP-00008, *Process Data for the Process Condensate Lag Storage Vessels (DEP-VSL-00005A/B), Transfer Pumps (DEP-PMP-00005A/B/), and Recirculation Pumps (DEP-PMP-00015A/B/C).*
3. 24590-BOF-P1-25-00001, *Balance of Facilities LAW Effluent Process Bldg & LAW Effluent Drain Tank Bldg General Arrangement Plan at Elev 0 Ft - 0 In.*
4. 24590-BOF-RPT-PR-15-001, *Direct Feed LAW Process Corrosion Data.*
5. 24590-WTP-DB-PET-17-001, *Process Inputs Basis of Design (PIBOD) for LAW and EMF.*
6. 24590-WTP-ICD-MG-01-006, *ICD 06 – Interface Control Document for Radioactive, Dangerous Liquid Effluents.*
7. 24590-WTP-M0C-50-00004, *Wear Allowance for WTP Waste Slurry Systems with ECCN 24590-WTP M0E-50-00012.*
8. 24590-WTP-RPT-M-11-002, *WTP Vessel Localized Corrosion Limit Analysis Report.*

Additional Reading

- 24590-BOF-M6-DEP-00006001, *P&ID - BOF/EMF Direct Feed LAW EMF Process System Process Condensate Lag Storage Vessel - DEP-VSL-00005A.*
- 24590-BOF-M6-DEP-00006002, *P&ID - BOF/EMF Direct Feed LAW EMF Process System Process Condensate Lag Storage Vessel - DEP-VSL-00005B.*
- 24590-BOF-MVD-DEP-00006, *Mechanical Datasheet for 24590-BOF-MV-DEP-VSL-00005A/00005B - Process Condensate Lag Storage Vessel.*
- CCN 130173, Dillon, CP (Nickel Development Institute), Personal Communication to J R Divine (ChemMet, Ltd., PC), 3 Feb 2000.
- Danielson, MJ & SG Pitman, 2000, *Corrosion Tests of 316L and Hastelloy C-22 in Simulated Tank Waste Solutions*, PNWD-3015 (BNFL-RPT-019, Rev 0), Pacific Northwest Laboratory, Richland WA.
- Davis, JR (Ed), 1987, *Corrosion, Vol 13*, In "Metals Handbook", ASM International, Metals Park, OH 44073
- Davis, JR (Ed), 1994, *Stainless Steels*, In ASM Metals Handbook, ASM International, Metals Park, OH 44073
- Hamner, NE, 1981, *Corrosion Data Survey*, Metals Section, 5th Ed, NACE International, Houston, TX 77218
- Jones, RH (Ed.), 1992, *Stress-Corrosion Cracking*, ASM International, Metals Park, OH 44073
- Koch, GH, 1995, *Localized Corrosion in Halides Other Than Chlorides*, MTI Pub No. 41, Materials Technology Institute of the Chemical Process Industries, Inc, St Louis, MO 63141
- Revie, WW, 2000. *Uhlig's Corrosion Handbook*, 2nd Edition, Wiley-Interscience, New York, NY 10158
- Sedriks, AJ, 1996, *Corrosion of Stainless Steels*, John Wiley & Sons, Inc., New York, NY 10158
- Uhlig, HH, 1948, *Corrosion Handbook*, John Wiley & Sons, New York, NY 10158
- Zapp, PE, 1998, *Preliminary Assessment of Evaporator Materials of Construction*, BNF—003-98-0029, Rev 0, Westinghouse Savannah River Co., Inc for BNFL Inc.
- Van Delinder, LS (Ed), 1984, Corrosion Basics, NACE International, Houston, TX 77084

CORROSION EVALUATION

PROCESS CORROSION DATA SHEET (extract)

Component(s) (Name/ID #) **Evaporator Feed Vessel (DEP-VSL-00002)**

Facility EMF

In Black Cell? No

Chemicals	Unit	Stream ID DEP20 AQUEOUS
Cations (ppm)		
Al^{+3} (Aluminum)	ppm	0
Fe^{+3} (Iron)	ppm	0
Hg^{+2} (Mercury)	ppm	0
Pb^{+2} (Lead)	ppm	0
Anions (ppm)		
Cl^- (Chloride)	ppm	36
CO_3^{-2} (Carbonate)	ppm	1473
F^- (Fluoride)	ppm	6
NO_2^- (Nitrite)	ppm	0
NO_3^- (Nitrate)	ppm	1
PO_4^{-3} (Phosphate)	ppm	0
SO_4^{-2} (Sulfate)	ppm	9
$OH(aq)^-$	ppm	10
$OH(s)^-$	ppm	0
pH		9.50
Suspended Solids	wt%	0
Temperature	°F	120.00
Liquid Density (normal)	lb/ft3	63.5

CORROSION EVALUATION

24590-BOF-RPT-PR-15-001, Rev 0
Direct Feed LAW Process Corrosion Data

Figure A-8 DEP-VSL-00005A/B Aqueous PCDS

	DEP01		DEP20	
Maximum Properties				
Suspended Solids [wt %]	0	(5)	0	(3)
Total Salts [wt %]	TBD	(5)	TBD	(1)
Sodium Molarity [M]	TBD	(5)	TBD	(1)
Relative Humidity [%]	n/a	(5)	n/a	
pH	9.50	(5)	9.50	(4)
Anti-Foam Agent [ppm]	TBD	(5)	TBD	(1)
TOC [lbm/hr]	TBD	(5)	TBD	(1)
Pressure [psig]	0	(5)	0	(2)
Temperature [C]	52	(5)	49	(6)
Temperature [F]	126	(5)	120	(6)
Water Flow Rate [lbm/hr]	TBD	(5)	TBD	(1)
Total Aqueous Flow Rate [lbm/hr]	TBD	(5)	TBD	(1)
Total Flow Rate [lbm/hr]	TBD	(5)	TBD	(1)
UserNote	Transfer from DEP-VSL-4A/B to Dep-VSL-5A/B		Transfer from DEP-VSL-5A/B to LERF/ETF	

	DEP01	(9)	DEP20	(7)
	Aqueous concentration, ppm (mg/kg)			
Cations				
Ag+	0		0	
Al+3	0		0	
Am+3	0		0	
As+5	0		0	
B+3	0		0	
Ba+2	0		0	
Be+2	0		0	
Bi+3	0		0	
Ca+2	0		0	
Cd+2	0		0	
Ce+4	0		0	
Co+2	0		0	
Cr+3	0		0	
Cr+6	0		0	
Cs+	0		0	
Cu+2	0		0	
Eu+3	0		0	
Fe+2	0		0	
Fe+3	0		0	
H+	0		0	
Hg+2	0		0	
K+	0		0	
La+3	0		0	
Li+	0		0	
Mg+2	0		0	
Mn+4	0		0	
Mo+6	0		0	
Na+	1094		1094	
Nd+3	0		0	
Ni+2	0		0	
Pb+2	0		0	
Pd+2	0		0	
Pr+4	0		0	
Pu+4	0		0	
Ra+2	0		0	
Rb+	0		0	
Rh+3	0		0	
Ru+4	0		0	
Sb+3	0		0	
Se+4	0		0	
Si+4	0		0	
Sr+2	0		0	
Ta+5	0		0	
Tc+4	0		0	
Te+4	0		0	
Th+4	0		0	
Ti+4	0		0	
Tl+5	0		0	
U+4	0		0	
V+3	0		0	
W+6	0		0	
Y+3	0		0	
Zn+2	0		0	
Zr+4	0		0	
Anions				
B(OH)4-	0		0	
C2O4-2	0		0	
Cl-	36		36	
CN-	0		0	
CO3-2	1473		1473	
F-	6		6	
H2PO4-	0		0	
H2SiO4-2	1		1	
H3SiO4-	0		0	
HCO3-	0		0	
HPO4-2	0		0	
HSO3-	0		0	
HSO4-	1		1	
I-	0		0	
IO3-	0		0	
NH4+	74		74	
NO2-	0		0	
NO3-	1		1	
O-2	2		2	
O2-2	0		0	
OH(aq)-	10	(9)	10	(8)
OH(s)-	0		0	
PO4-3	0		0	
SO3-2	27		27	
SO4-2	9		9	
Organics				
AFA_DCMP	0		0	
AFA_NVOC	0		0	
NVOC	0		0	
Sucrose	0		0	
SVOC	16		16	
VOC	1		1	

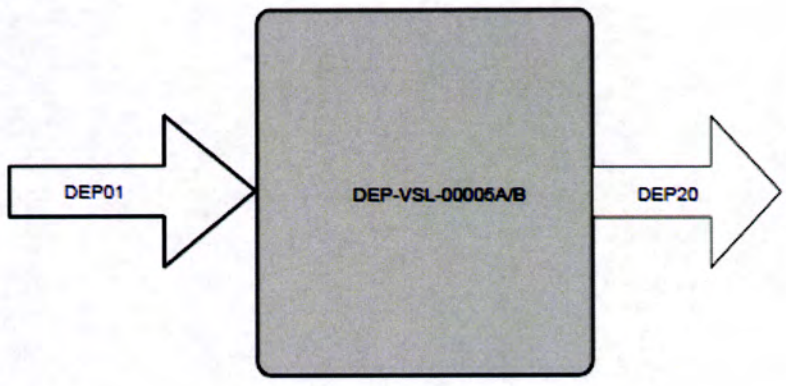

Notes:
(1) Values marked as "TBD" will be provided in the revision to 24590-BOF-M4C-V11T-00004 (Ref. 5.1.4(2)) based on APPS model runs for corrosion
(2) Maximum vessel property per 24590-BOF-MVC-DEP-00008 (Ref. 5.1.4(5), Section 8)
(3) It is assumed that there are no suspended solids in DEP-VSL-00005A/B due to negligible suspended solids in the inlet stream, DEP01.
(4) The maximum pH of DEP-VSL-00004A/B and DEP-VSL-00005A/B on the PCDSs is 9.5, based on the pH range of 9 to 9.5 for caustic scrubber effluent provided in Ref. 5.1.1(12), Section 6.6.3.2.1
(5) DEP01 values for maximum physical properties from DEP-VSL-00004A/B PCDS reported in Figure A-7
(6) ICD 06 temperature limit (Ref. 5.1.1(4), Section 2.1)
(7) Maximum concentrations of all COCs except OH(aq)- in governing stream DEP20 per Ref. 5.1.4(2) Table 8-6
(8) MINIMUM OH(aq)- value for governing stream DEP20 per Ref. 5.1.4(2) Table 8-6
(9) Concentration values for DEP01 are the same as DEP20, since DEP01 is the only inlet stream included in the analysis from Ref. 5.1.4(2)

GENERAL NOTE FOR USE OF PCDS:

- *The information provided by the PCDS report is intended solely for use in support of the vessel material selection process and Corrosion Evaluations. The inputs, assumptions, and computational/engineering models used in generating the results presented herein are specific to this effort. Use of the information presented herein for any other purpose will require separate consideration and analysis to support justification of its use for the desired, alternative purpose.*
- *The process descriptions in this report cover routine process operations and non-routine (infrequent) process operations, when such exist, that could impact corrosion or erosion of process equipment.*
- *The process descriptions provided in this report are for general information and reflective of the corrosion engineer's analysis for transparency, the information is current only at the time this document is issued. These process descriptions should not be referenced for design.*

4.8 Process Condensate Lag Storage Vessels (DEP-VSL-00005A/B)

4.8.1 Description of Vessels

DEP-VSL-00005A/B receive multiple batches from DEP-VSL-00004 A/B. DEP-VSL-00005A/B also receive secondary steam blowdown from SCW-VSL-00054 and sump transfers from DEP-SUMP-00003A/B and These vessels allow for lag storage and characterization before sending to the LERF/ETF. In the event of an overflow, the liquid will flow by gravity into DEP-VSL-00001.

Process Condensate Lag Storage Vessel Recirculation Pumps (DEP-PMP-00015A/B) are used to recirculate the vessel contents via eductors (DEP-EDUC-00010/11/12/13) and (DEP-EDUC-00013/14/15/16) to homogenize the contents and allow a representative sample to be taken. Process Concentrate Transfer Pumps (DEP-PMP-00005A/B) are used to transfer LERF/ETF Lag Storage Vessel contents to LERF/ETF.

The vessels are monitored for level, pressure, and temperature.

DEP-VSL-00005A/B are passively purged with air drawn through the vessel head space and is vented to the Vessel Vent Header and the transfer line high point vent. Vessel vent streams are described in Section 4.10. These vessels will have capability to add Process Service Water (PSW) for washing.

Figure 9 is a sketch of the input and output arrangement of streams for DEP-VSL-00005A/B.

Figure 9 – DEP-VSL-00005A/B Sketch

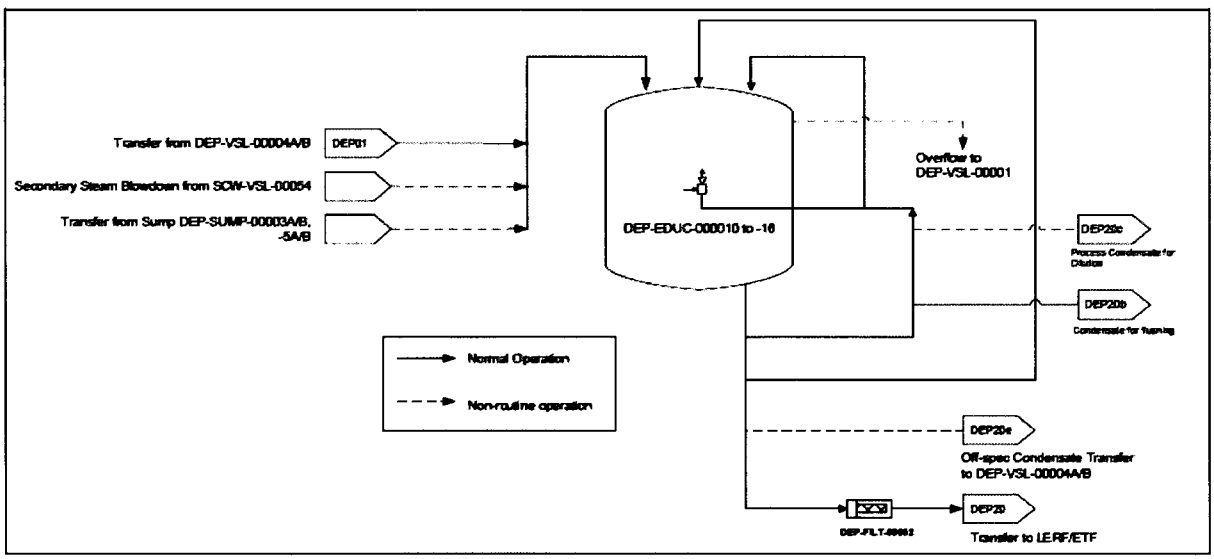

4.8.2 System Functions

The process functions of DEP-VSL-00005A/B are as follows:

- Receive inlet streams

- Mix process fluids
- Store process fluids
- Transfer process fluids

The equipment performs additional system functions beyond the process functions, but these additional functions are beyond the scope of this document. These functions are not discussed any further in this document, however are listed below for completeness.

- Confine collected effluents
- Sample collected effluents
- Flush system components
- Report system conditions

4.8.3 Description of Process Functions for DEP-VSL-00005A/B

4.8.3.1 Receipt Streams

The following process streams taken from PFD 24590-BOF-M5-V17T-00014 (Ref. 5.1.3(4)) and P&IDs 24590-BOF-M6-DEP-00006001 (Ref. 5.1.3(26)) and 24590-BOF-M6-DEP-00006002 (Ref. 5.1.3(27)) are inputs to DEP-VSL-00005A/B.

- DEP01 – Transfer from DEP-VSL-00004A/B
- Secondary Steam Blowdown from SCW-VSL-00054
- Transfer from DEP-SUMP-00003A/B and DEP-SUMP-00005A/B

4.8.3.1.1 DEP01 – Transfer from DEP-VSL-00004A/B

The description and properties of Stream DEP01 have been previously described in Section 4.7.3.4.1.

4.8.3.1.2 Secondary Steam Blowdown from SCW-VSL-00054

DEP-VSL-00005A/B can receive blowdown from SCW-VSL-00054.

This is a non-routine operation and is not modeled in the APPS model. Therefore, the stream is not discussed any further in this document.

4.8.3.1.3 Transfer from DEP-SUMP-00003A/B and DEP-SUMP-00005A/B

DEP-VSL-00005A/B can receive the collected effluent from DEP-SUMP-00003A/B and DEP-SUMP-00005A/B.

This is a non-routine operation and is not modeled in the APPS model. Therefore, the stream is not discussed any further in this document.

4.8.3.2 Store Liquid Effluents

DEP-VSL-00005A/B normally receives condensate transferred from DEP-VSL-00004A/B. Secondary steam blowdown from SCW-VSL-00054 and the contents of the DEP-SUMP-00003A/B and DEP-SUMP-00005A/B can also be received on a non-routine basis.

4.8.3.3 Mix Liquid Effluents

Mixing is accomplished in DEP-VSL-00005A/B using eductors (DEP-EDUC-000010 through -00016) connected to a recirculation loop. Mixing helps provide a homogeneous mixture prior to sampling and transfer from the vessel.

4.8.3.4 Transfer Process Fluids

The following process streams taken from PFD 24590-BOF-M5-V17T-00014 (Ref. 5.1.3(4)) and P&IDs 24590-BOF-M6-DEP-00006003 (Ref. 5.1.3(28)) and 24590-BOF-M6-DEP-00006004 (Ref. 5.1.3(29)) are outputs from DEP-VSL-00005A/B.

- DEP20 - Transfer to LERF/ETF
- DEP20e - Off-spec condensate transfer to DEP-VSL-00004A/B
- DEP20b - Condensate for flushing
- DEP20c – Process Condensate for Dilution
- Overflow to DEP-VSL-00001

4.8.3.4.1 DEP20 - Transfer to LERF/ETF

The contents of DEP-VSL-00005A/B are transferred to LERF/ETF if the WAC from *ICD 06 - Interface Control Document For Radioactive, Dangerous Liquid Effluents* (24590-WTP-ICD-MG-01-006. Ref. 5.1.1(4)) are satisfied. **Note that DEP20 passes through DEP-FILT-00002 to remove any solids before being transferred to LERF/ETF, therefore DEP-FILT-00002 is covered by the same PCDS as DEP-VSL-00005A/B, as shown in Appendix A Page A-11.**

Sodium Molarity
The minimum sodium molarity for DEP20 is 0M based on the vessel inlet stream. DEP01 (Section 4.8.3.1.1). The range for sodium molarity in stream DEP20 during normal operations will be established in the DFLAW PIBOD.

Temperature
The minimum and normal temperatures for stream DEP20 are 40°F and 115°F respectively. based on the properties of DEP-VSL-00005A/B (24590-BOF-MVC-DEP-00008. Section 8. Ref. 5.1.4(5)). The maximum temperature for stream DEP20 is 120°F. based on the temperature of the LERF/ETF transfer line at the design pressure (Ref. 5.1.1(4). Section 2.1).

Solids Concentration
The minimum solids concentration for DEP20 is 0 wt % based on the only normal inlet stream for DEP-VSL-00005A/B. DEP01 (Section 4.8.3.1.1). The range for solids concentration in stream DEP20 during normal operations will be established in the DFLAW PIBOD.

CORROSION EVALUATION

Density
The minimum, normal, and maximum density for stream DEP20 is 61.6 lb/ft^3, 63.5 lb/ft^3, and 65.8 lb/ft^3 respectively, based on the properties of DEP-VSL-00005A/B (Ref. 5.1.4(5), Section 8).

pH
The range for pH in stream DEP20 during normal operations will be established in the DFLAW PIBOD.

4.8.3.4.2 DEP20e - Off-spec Condensate Transfer to DEP-VSL-00004A/B

If the contents of DEP-VSL-00005A/B do not meet the requirements for transfer to LERF/ETF, the contents can be transferred to DEP-VSL-00004A/B.

This is a non-routine operation and is not modeled in the APPS model. Therefore, the stream is not discussed any further in this document.

4.8.3.4.3 DEP20b - Condensate for Flushing

Condensate from DEP-VSL-00005A/B can be used for flushing various lines in the DEP system. This includes the outlets from DEP-PMP-00001A/B and DEP-VSL-00003A/B/C.

Condensate from DEP-VSL-00005A/B can also be used to backflush solids from DEP-FILT-00003 to DEP-VSL-00003A/B/C, as mentioned in Section 4.2.3.1.7. Backflushing solids from DEP-FILT-00003 is a normal operation and the properties of the condensate stream used for backflushing are the same as DEP20 (Section 4.8.3.4.1), except the maximum temperature of DEP20b is 126°F rather than 120°F since the ICD 06 temperature limit does not apply to this flush stream.

4.8.3.4.4 DEP20c - Process Condensate for Dilution

Condensate from DEP-VSL-00005A/B can be used for dilute waste streams passing through DEP-HX-00001 and the transfer line return to the Tank Farms.

This is a non-routine operation and is not modeled in the APPS model. Therefore, the stream is not discussed any further in this document.

4.8.3.4.5 Overflow to DEP-VSL-00001

DEP-VSL-00005A/B overflows through a gravity drain line that connects to the DEP vessel overflow collection header, which empties into the Low Point Drain Vessel, DEP-VSL-00001. The vessel overflow is a non-routine condition that is not included in the APPS model and is not discussed further in this document.

4.8.4 Process Modes

4.8.4.1 Normal Operations

Based on the assessment of streams frequently transferred in and out of DEP-VSL-00005A/B, the following processing modes are considered:

Inlet streams:

- DEP01 – Transfer from DEP-VSL-00004A/B

Outlet streams:

- DEP20 - Transfer to LERF/ETF
- DEP20b - Condensate for Flushing

Section 4.8.5.1 summarizes these processing modes in tabular form.

4.8.4.2 Infrequent Operations

Based on the assessment of streams infrequently transferred in and out of DEP-VSL-00005A/B, the following processing modes are not considered:

Inlet streams:

- Secondary Steam Blowdown from SCW-VSL-00054
- Transfer from DEP-SUMP-00003A/B and DEP-SUMP-00005A/B

Outlet streams:

- DEP20e - Off-spec condensate transfer to DEP-VSL-00004A/B
- DEP20c - Process Condensate for Dilution
- Overflow to DEP-VSL-00001

4.8.5 Summary of Processing Conditions for DEP-VSL-00005A/B

4.8.5.1 Normal Operations

The following table summarizes the normal processing modes for DEP-VSL-00005A/B.

Table 4-11 - DEP-VSL-00005A/B Normal Operations

	Na Molarity (mol/L)			Temperature (°F)			UDS (wt%)		
Stream Number	Low	Normal	Upper	Low	Normal	Upper	Low	Normal	Upper
DEP01	0	TBD	TBD	40	115	126	0	0	0
DEP20	0	TBD	TBD	40	115	120	0	0	0
DEP20b	0	TBD	TBD	40	115	126	0	0	0

CORROSION EVALUATION

ISSUED BY
RPP-WTP PDC

R11888353

DVP-EXHR-00001A/B
Process Ventilation Exhauster

Contents of this document are Dangerous Waste Permit affecting

Results

Materials Considered:

Material (UNS No.)	Acceptable Material
Type 304L (S30403)	
Type 316L (S31603)	X
Al-6XN® 6% Mo (N08367)	
Hastelloy® C-22® (N06022)	

Recommended Material Types: **Housing – Type 316 (max 0.030% C; dual certified)**
Shaft – Type 316 (max 0.030% C; dual certified)

Minimum Corrosion Allowance: **0.0 inch**

Inputs and References

- Inlet temperature (°F) (norm/max): 124/180 (24590-BOF-M6C-DEP-00009)
- Discharge temperature (°F) (norm/max): 124/180 (24590-BOF-M6C-DEP-00009)
- Corrosion allowance: 0.0 inch (24590-WTP-GPG-M-047)
- Location: Room E-0102; (24590-BOF-P1-25-00001)
- Operating conditions are as stated in the applicable section of (24590-BOF-RPT-PR-15-001)

Assumptions and Justification (refer to Section 19—References)

- Operating conditions presented on the Process Corrosion Datasheet (PCDS) are conservative with respect to corrosion.[4]
- Cyclic data is not provided in 24590-BOF-MVC-M80T-00001, *DFLAW EMF Vessel Cyclic Datasheet Inputs and Fatigue Evaluation*, calculation. Based on the system configuration, the values for DVP-HEPA-00004A/B are considered representative of the exhausters.

Operating Restrictions

- Develop a procedure for periodic, routine condition inspection assessments of the exhauster (both fan and motor assembly) for corrosion degradation from condensation, corrosion products, or debris as part of the Reliability Centered Maintenance program.
- Develop procedure to control lay-up and storage; preventing condensation during commissioning, startup and during inactive periods when the plant is operational.
- Procedures are to be reviewed and accepted by MET prior to use.

Some information on all pages may appear to be illegible, however, the information necessary for assuring adequate design is legible.

Concurrence MB
Operations

REV	DATE	REASON FOR REVISION	ORIGINATE	CHECK	REVIEW	APPROVE
1	3/29/18	Revised sect 17 to discuss DFLAW PIBOD properties	DLAdler	SWVail	RBDavis	TErwin
0	12/19/17	Initial Issue	DLAdler	APRangus	RBDavis	TErwin

CORROSION EVALUATION

Please note that source, special nuclear and byproduct materials, as defined in the Atomic Energy Act of 1954 (AEA), are regulated at the U.S. Department of Energy (DOE) facilities exclusively by DOE acting pursuant to its AEA authority. DOE asserts, that pursuant to the AEA, it has sole and exclusive responsibility and authority to regulate source, special nuclear, and byproduct materials at DOE-owned nuclear facilities. Information contained herein on radionuclides is provided for process description purposes only.

CORROSION EVALUATION

Corrosion/Erosion Detailed Discussion

The DFLAW EMF Vessel Vent Process System (DVP) receives the vessel vent streams from each of the EMF process vessels. The vessel vent streams are combined in a vent header and then sent through the ventilation system. The ventilation system consists of two identical train, with one in service and one as backup. Each train has a preheater (DVP-HTR-00001A/B), two-stage high efficiency particulate air (HEPA) filters (DVP-HEPA-00003A/B and -00004A/B), and a fan (DVP-EXHR-00001A/B). The ventilation stream is then exhausted to the atmosphere via a stack.

1 General/Uniform Corrosion Analysis

a Background

General corrosion or uniform corrosion is corrosion that is distributed uniformly over the surface of a material without appreciable localization. This leads to relatively uniform thinning on sheet and plate materials and general thinning on one side or the other (or both) for pipe and tubing. It is recognized by a roughening of the surface and by the presence of corrosion products. The mechanism of the attack typically is an electrochemical process that takes place at the surface of the material. Differences in composition or orientation between small areas on the metal surface create anodes and cathodes that facilitate the corrosion process.

b Component-Specific Discussion

Standard exhauster/blowers can be fabricated with a manufactured (cut and welded) housing or cast housing. The materials as allowed by design code can be either carbon steel or stainless steel; although corrosion and erosion resistant alloys are required unless there is sufficient bulk to the carbon steel material to ensure integrity while corroding at a high rate. The required corrosion allowance should be adjusted depending on the material selected; carbon steel or corrosion resistant steel.

Carbon steel or low alloy steel does not have sufficient corrosion resistance in reported environment. Depending on how the attachments are made, the inlet and outlet material should match either the piping or the housing where the weld is made. The reported operating conditions suggest that Type 316L is acceptable for the housing.

2 Pitting Corrosion Analysis

Pitting is localized corrosion of a metal surface that is confined to a point or small area and takes the form of cavities. Pitting corrosion will only be a concern if moisture is present during normal operation. Shut-down and heat-up thermal transients will likely condense vapors on the cold surfaces. Measures should be taken to prevent the potential formation of condensation in the exhauster while offline. Locations at crevices, at dead-legs, at low points, and under deposits will host conditions that support corrosion. The constituents in the vapor phase can be aggressive in oxidizing environments, when mixed with aqueous condensate, towards carbon steel and Type 304L stainless steel. Therefore, a material with a higher pitting corrosion resistance than Type 304L is necessary. Type 316L stainless steel, or better, is recommended for this application.

At the stated operating conditions, localized corrosion is not a major concern; corrosion will not proceed without sufficient electrolyte present. Type 316L is recommended.

3 Crevice Corrosion Analysis

Crevice corrosion is a form of localized corrosion of a metal or alloy surface at, or immediately adjacent to, an area that is shielded from full exposure to the environment because of close proximity of the metal or alloy to the surface of another material or an adjacent surface of the same metal or alloy. Crevice corrosion is similar to pitting in mechanism. Crevice corrosion will only be a concern if sufficient moisture is present. The ventilation stream humidity is controlled by the preheater upstream so condensation is controlled.

At the stated operating conditions, localized corrosion is not a major concern. Type 316L is recommended. Justification for this position begins with the understanding that this is an air handling unit operating at elevated temperatures, above the dew point. Corrosion will not take place or initiate when insufficient electrolyte is present.

4 Stress Corrosion Cracking Analysis

Stress corrosion cracking (SCC) is the cracking of a material produced by the combined action of corrosion and sustained tensile stress (residual or applied). In addition, sensitization of the grain boundaries is prevented with the materials recommended. The "L" grade (low carbon) stainless steel specified tends to negate sensitization from becoming a corrosion issue. It is assumed that condensation in the unit will be prevented; therefore, the exhauster will not undergo stress corrosion cracking because insufficient electrolyte will be present.

5 End Grain Corrosion Analysis

End grain corrosion is preferential aqueous corrosion that occurs along the worked direction of wrought stainless steels exposed to highly oxidizing acid conditions. End grain corrosion typically is not a major concern; it propagates along the rolling direction of the plate, not necessarily through the cross-sectional thickness. In addition, end grain corrosion is exclusive to metallic product forms with exposed end grains from shearing or mechanical cutting. Such conditions are not present in this component.

End grain corrosion is not expected to occur in the exhausters because corrosion will not occur in the absence of sufficient electrolyte.

CORROSION EVALUATION

6 Weld Corrosion Analysis

The welds used in the fabrication will follow the WTP specifications and standards for quality workmanship. The materials selected for this fabrication are compatible with the weld filler metals and ASME/AWS practice. Using the welding practices specified for the project there should not be gross micro-segregation, precipitation of secondary phases, formation of unmixed zones, or volatilization of the alloying elements that could lead to localized corrosion of the weld.

Corrosion at welds is not expected to occur in the exhausters because corrosion will not occur in the absence of sufficient electrolyte.

7 Microbiologically Influenced Corrosion Analysis

Microbiologically influenced corrosion (MIC) refers to corrosion affected by the presence or activity, or both, of microorganisms. In this system, the stated operating conditions are not suitable for microbial growth. The exhausters will operate at elevated temperatures and the presence of condensation is unlikely.

8 Fatigue/Corrosion Fatigue Analysis

Corrosion-fatigue is the result of the combined action of high cyclic stresses and a corrosive environment. Rotating equipment is designed for normal operating loads as well as a limited number of stops and starts. For rotating equipment operated with high cyclic stresses (on/off loads) or random equipment loads due to imbalance, the fatigue process is thought to cause localized rupture of the protective passive film, which could allow stainless steel to experience anodic dissolution until re-passivation. Multiple initiation sites are common when corrosion is involved, and the cracking that follows tends to be transgranular and branched. Distortions due to local yielding may increase vibrational loads, acting to shorten the component life.

Corrosion fatigue will not be a problem due to the low mechanical and thermal cycling, as well as the lack of sufficient electrolyte for corrosion.

9 Vapor Phase Corrosion Analysis

Vapor phase corrosion considers the gas and vapor constituents that form acidic condensate and the alloy corrosion resistance. The aggressive constituents are HCl, HF, and HNO_3; however, these are present in low concentrations in the gas. The upstream equipment removes acid gas-forming constituents; therefore, vapor phase corrosion is negligible. The formation of acidic condensate requires moisture condensing on the surface and mixing with the adsorbed surface constituents to produce an aggressive environment. Condensation on the surface is not likely during normal operation.

Vapor phase corrosion will not occur in the exhauster because the maximum operation conditions for this component preclude the presence of sufficient electrolyte and concentrations of acid gas forming components.

10 Erosion Analysis

Erosion is the progressive loss of material from a surface resulting from mechanical interaction between a particle and that surface. Solid particle erosion can occur in air, steam, and water fluid systems. When the fluid propels the solid particles at a sufficient velocity and the particle mass is sufficient, the surface can be damaged by the combined effect of millions of individual erosion "scars". The conditions expected for this component are not severe. Prior to reaching the exhausters, the offgas passes through a high efficiency particulate filter (HEPA) so should be free of particulates, and the flow through the exhauster is relatively low. The impingement erosion is not likely when there are very low particulates and moisture in the gas stream.

No erosion is expected so no general erosion allowance is necessary.

11 Galling of Moving Surfaces Analysis

Galling is a form of wear caused by a combination of friction and adhesion between moving surfaces. Under high compressive forces and movement, the friction temperatures cold-weld the two surfaces together at the surface asperities. As the adhesively bonded surface moves some of the bonded material breaks away. Microscopic examination of the galled surface shows some material stuck or even friction welded to the adjacent surface, while the softer of the two surfaces appears gouged with balled-up or torn lumps of material stuck to its surface.

The corrosion evaluation is specific to the process fluid and the inside components of the exhauster. Although the rotating shaft will have a bearing set, the set should be on the outside of the seals. Inside the exhauster, the metallic surfaces will not contact and therefore galling is not possible.

Conditions which lead to galling are not present in this component; therefore, galling is not a concern.

12 Fretting/Wear Analysis

Fretting corrosion refers to corrosion damage caused by a slight oscillatory slip between two surfaces. Similar to galling, but at a much smaller movement, the corrosion products and metal debris break off and act as an abrasive between the surfaces, classic 3-body wear problem. This damage is induced under load and repeated relative surface motion, as induced for example by vibration. Pits or grooves and oxide debris characterize this damage, typically found in machinery, bolted assemblies and ball or roller bearings. Contact surfaces exposed to vibration during transportation are exposed to the risk of fretting corrosion.

CORROSION EVALUATION

The corrosion evaluation is specific to the process fluid and the inside components of the exhauster. Although the rotating shaft will have a bearing set, the set should be on the outside of the seals. Inside the exhauster, the metallic surfaces will not contact and therefore fretting wear is not possible.

Conditions which lead to fretting are not present in this component; therefore, fretting is not a concern.

13 Galvanic Corrosion

Galvanic corrosion is an electrochemical process in which one metal corrodes preferentially to another when both metals are in electrical contact, in the presence of an electrolyte. Dissimilar metals and alloys have different electrode potentials, and when two are in contact in an electrolyte, one metal acts as anode and the other as cathode. The electropotential difference between the dissimilar metals is the driving force for an accelerated attack. A potential difference of more than 200 mv is needed for sufficient driving force. Galvanic compatibility is one of the attributes used to select the WTP alloys. Austenitic stainless steels in contact with other austenitic stainless steels do not have sufficient electropotential difference to significantly influence the metal loss.

No sufficiently dissimilar metals are present. The gas is dry and contains insufficient moisture to act as an electrolyte. Galvanic corrosion is not expected to be a corrosion issue under these conditions.

14 Cavitation

Cavitation corrosion is defined as another synergistic process, the combined influence of mechanical disruption of the metal surface and the corrosion of the active metal. Cavitation occurs when the local fluid pressure drops below the vapor pressure of the fluid resulting in a liquid vapor interface or bubbles to form. Their collapse on the metal surface has sufficient energy to rupture the oxide film and depending on alloy, may be capable of removing metal. The fluid chemistry and alloy define corrosion characteristics of the oxide film; where localization of the cavitation produces a condition where the bubble collapse rate is greater than the ability to passivate, the normally passive alloy can experience accelerated loss. This is most likely to occur in pumps, valves (flow control), orifices, ejectors/eductors, and nozzles. Cavitation is not expected in an ventilation system.

15 Creep

Creep is defined as a time-dependent deformation at elevated temperature and constant stress, creep is a thermally activated process. The temperature at which creep begins depends on the alloy composition. Creep failures and stress rupture failures follow the same mechanism and are influenced by similar variables like temperature. Stress rupture is defined as bi-axial creep restricted to pipe like geometries. Creep is found in components subjected to heat for long periods, and the creep rate generally increases as the temperature nears the melting point. At 180 °F, the maximum operating temperature for the exhausters is far too low to experience creep; therefore, creep is not a concern.

16 Inadvertent Addition of Nitric Acid

Inadvertent introduction of nitric acid into the ventilation system is not a plausible scenario. Nitric acid and decontamination agents may be used over short durations. Procedures will be used to control exposures and corrosion loss.

17 Conclusion & Justification

The conclusion of this evaluation is that DVP-EXHR-00001A/B can be fabricated from Type 316 stainless steel and that Type 316 stainless steel is capable of service for the design life. Providing the reported dry-air conditions are maintained, Type 316 stainless steel is expected to be resistant to uniform and localized corrosion. The probable uniform corrosion is negligible; no corrosion allowance is required. Conditions in the exhauster do not promote erosion so no erosion allowance is necessary.

Sections of the issued Process Corrosion Data report (PCDS) (attached to the corrosion evaluation) include several references to the *Process Inputs Basis of Design (PIBOD) for LAW and EMF*, 24590-WTP-DB-PET-17-001 which was not issued at the time the PCDS was issued. The PIBOD for LAW and EMF has been issued. Any variance in the values between the PIBOD and PCDS associated with streams and stream characteristics used to evaluate corrosion and erosion have been reviewed and evaluated. The evaluation concluded that the analysis described in this corrosion evaluation was bounding and the material selection recommendations remain as initially issued.

Based on preliminary Vendor data, the PIBOD shows a normal operating range of 243 to 246 °F, with a resulting relative humidity of 2%. The PIBOD conditions have been evaluated from a materials perspective. The material selection recommendation is unchanged.

18 Margin

Per 24590-WTP-SRD-ESH-01-001-02, Appendix H "When erosion and corrosion effects can be shown to be negligible or entirely absent, a design corrosion allowance need not be specified." Localized corrosion or erosion of this component is not expected. Prior to reaching the exhausters, the ventilation stream passes through a high efficiency particulate filter (HEPA) and, therefore, should be free of particulates. The solids content and gas velocity are sufficiently low that localized erosion is not a concern. Since localized erosion effects are not present, additional localized erosion protection is not required. In the reported dry-air conditions, there is insufficient electrolyte to drive corrosion. No corrosion and therefore no corrosion allowance is necessary. The exhauster requires routine maintenance and can be replaced. Based on the range of inputs, system knowledge, and engineering judgment/experience, there is no margin associated with corrosion or erosion; however, the design margins remain in place.

CORROSION EVALUATION

19 References

1. 24590-BOF-M6C-DEP-00009, *Design Pressure and Temperature Calculation for the EMF DEP/DVP/AFR/NLD/SHR/SNR Systems.*
2. 24590-BOF-MVC-M80T-00001, *DFLAW EMF Vessel Cyclic Datasheet Inputs and Fatigue Evaluation.*
3. 24590-BOF-P1-25-00001, *Balance of Facilities LAW Effluent Process Bldg & LAW Effluent Drain Tank Bldg General Arrangement Plan At Elev 0 ft - 0 in.*
4. 24590-BOF-RPT-PR-15-001, *Direct Feed LAW Process Corrosion Data.*
5. 24590-WTP-DB-PET-17-001, *Process Inputs Basis of Design (PIBOD) for LAW and EMF.*
6. 24590-WTP-GPG-M-047, *Design Guide: Preparation of Corrosion Evaluations.*
7. 24590-WTP-SRD-ESH-01-001-02, *Safety Requirements Document Volume II.*

Additional Reading

- 24590-BOF-3ZD-25-00001, *WTP Direct Feed Low Activity Waste (DFLAW) Facility and System Design Descriptions.*
- 24590-BOF-M6-DVP-00001001, *P&ID - BOF/EMF Direct Feed LAW EMF Vessel Vent Process System DVP-EXHR-00001A/B.*
- 24590-BOF-M6C-DEP-00009, *Design Pressure and Temperature Calculation for the EMF DEP/DVP/AFR/NLD/SHR/SNR Systems.*
- 24590-BOF-MAD-DVP-00001, *Mechanical Data Sheet, Process Ventilation Exhauster.*
- Berhardsson, S, R Mellstrom, and J Oredsson, 1981, *Properties of Two Highly Corrosion Resistant Duplex Stainless Steels*, Paper 124, presented at Corrosion 81, NACE International, Houston, TX 77218
- Davis, JR (Ed), 1987, *Corrosion, Vol 13*, In "Metals Handbook", ASM International, Metals Park, OH 44073
- Davis, JR (Ed), 1994, *Stainless Steels*, In ASM Metals Handbook, ASM International, Metals Park, OH 44073
- Hamner, NE, 1981, *Corrosion Data Survey*, Metals Section, 5th Ed, NACE International, Houston, TX 77218
- Jones, RH (Ed.), 1992, *Stress-Corrosion Cracking*, ASM International, Metals Park, OH 44073
- Koch, GH, 1995, *Localized Corrosion in Halides Other Than Chlorides*, MTI Pub No. 41, Materials Technology Institute of the Chemical Process Industries, Inc, St Louis, MO 63141
- Sedriks, AJ, 1996, *Corrosion of Stainless Steels*, John Wiley & Sons, Inc., New York, NY 10158
- Uhlig, HH, 1948, *Corrosion Handbook*, John Wiley & Sons, New York, NY 10158
- Van Delinder, LS (Ed), 1984, *Corrosion Basics*, NACE International, Houston, TX 77084

CORROSION EVALUATION

PROCESS CORROSION DATA SHEET (extract)

Component(s) (Name/ID #) **Process Ventilation Exhauster (DVP-EXHR-00001A/B)**

Facility **EMF**

In Black Cell? **NO**

		Stream ID DEP18
Chemicals	Unit	**GASEOUS**
HCl	ppmV	0
HF	ppmV	0
NH3	ppmV	0
NO	ppmV	0
NO2	ppmV	0
SO2	ppmV	0
RH	%	40.00
Suspended Solids	wt%	NA
Temperature	°F	180

CORROSION EVALUATION

Figure A-12 DVP-EXHR-00001 Gas PCDS

	DEP17	DEP18
Maximum Properties		
Suspended Solids [wt %]	n/a	n/a
Total Salts [wt %]	n/a	n/a
Sodium Molarity [M]	n/a	n/a
Relative Humidity [%]	40 (4)	40 (4)
pH	n/a	n/a
Anti-Foam Agent [ppm]	n/a	n/a
TOC [lbm/hr]	TBD	TBD
Pressure [psig]	-0.86 (3)	-0.88 (3)
Temperature [C]	82 (2)	82 (2)
Temperature [F]	180 (2)	180 (2)
Water Flow Rate [lbm/hr]	TBD	TBD
Total Aqueous Flow Rate [lbm/hr]	TBD	TBD
Total Flow Rate [lbm/hr]	TBD	TBD
UserNote	VIT VAPOR Filtered air to DVP-EXHR-00001A/B	VIT VAPOR DVP-EXHR-00001A/B exhaust air to stack

Gases	DEP17 Gas Concentration, ppmv(mL/m3)	DEP18
Ar	9261	9261
CH3I	0	0
Cl2	0	0
CO	0	0
CO2	329	329
F2	0	0
H2	0	0
HCl	0	0
HCN	0	0
HF	0	0
I2	0	0
N2	781068	781068
NaCl(s)	0	0
NaCN(s)	0	0
NaF(s)	0	0
NaI(s)	0	0
NH3	0	0
NO	0	0
NO2	0	0
O2	209458	209458
P2O5(s)	0	0
PO2	0	0
SO2	0	0
SO3(s)	0	0

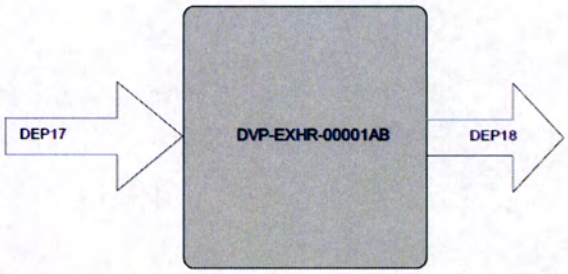

GENERAL NOTE FOR USE OF PCDS:

- *The information provided by the PCDS report is intended solely for use in support of the vessel material selection process and Corrosion Evaluations. The inputs, assumptions, and computational/engineering models used in generating the results presented herein are specific to this effort. Use of the information presented herein for any other purpose will require separate consideration and analysis to support justification of its use for the desired, alternative purpose.*
- *The process descriptions in this report cover routine process operations and non-routine (infrequent) process operations, when such exist, that could impact corrosion or erosion of process equipment.*
- *The data in the non-shaded columns of the PCDSs has NOT been adjusted to comply with the highest expected, vessel-specific operational conditions.*
- *The process descriptions provided in this report are for general information and reflective of the corrosion engineer's analysis for transparency, the information is current only at the time this document is issued. These process descriptions should not be referenced for design.*

4.10 DVP System

4.10.1 Description of Equipment

The DFLAW EMF Vessel Vent Process System (DVP) receives the vessel vent streams from each of the EMF process vessels. The vessel vent streams are combined in a vent header and then sent through the ventilation system. The ventilation system consists of two identical train, with one in service and one as backup. Each train has a preheater (DVP-HTR-00001A/B), two-stage high efficiency particulate air (HEPA) filters (DVP-HEPA-00003A/B and -00004A/B), and a fan (DVP-EXHR-00001A/B). The ventilation stream is then exhausted to the atmosphere via a stack.

Figure 11 is a sketch of the input and output arrangement of streams for the DVP.

Figure 11 – DVP System Sketch

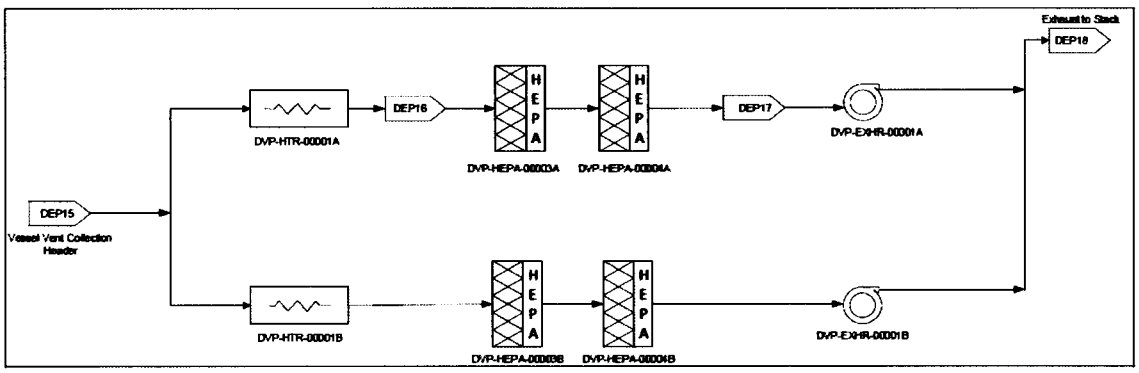

4.10.2 System Functions

The process functions of the DVP system are as follows:

- Draw air
- Remove particulates
- Exhaust air

The equipment performs additional system functions beyond the process functions, but these additional functions are beyond the scope of this document. These functions are not discussed any further in this document, however are listed below for completeness.

- Confine hazardous materials
- Report system conditions

4.10.3.3 Exhaust Air

The following process stream taken from PFD 24590-BOF-M5-V17T-000013 (Ref. 5.1.3(3)) and P&ID 24590-BOF-M6-DVP-00001001 (Ref. 5.1.3(30)) is the output from the DVP system.

- DEP18 – Exhaust to stack

4.10.3.3.1 DEP18 – Exhaust to stack

DEP18 is the combined exhaust stream for the two ventilation trains after the exhaust fans. The gas is exhausted to the atmosphere through a stack.

Sodium Molarity
N/A, this is a gas stream

Temperature
The range for temperature in stream DEP18 during normal operations will be established in the LAW/EMF PIBOD. The maximum temperature is equal to 180°F (Ref 5.1.4(9)).

Solids Concentration
N/A, this is a gas stream

Density
The range for density in stream DEP18 during normal operations will be established in the LAW/EMF PIBOD.

pH
N/A, this is a gas stream

Relative Humidity
The range for relative humidity in stream DEP18 during normal operations will be established in the LAW/EMF PIBOD.

4.10.4 Process Modes

4.10.4.1 Normal Operations

Based on the assessment of streams frequently transferred in and out of the DVP system, the following normal processing modes are considered:

- DEP15 – Vessel Vent Collection Header
- DEP16 – Vent stream between the preheater and the first stage HEPA filter
- DEP17 – Vent stream between the second stage HEPA filter and the fan
- DEP18 – Exhaust to stack

Section 4.10.5.1 summarizes these processing modes in tabular form.

4.10.4.2 Infrequent Operations

There are no infrequent operations for the EMF process vent system.

4.10.5 Summary of Processing Conditions for the DVP

4.10.5.1 Normal Operations

The following table summarizes the normal processing modes for DVP.

Table 4-12 - EMF Process Vent System Normal Conditions

	Na Molarity (mol/L)			Temperature (°F)			UDS		
Stream Number	Low	Normal	Upper	Low	Normal	Upper	Low	Normal	Upper
DEP15	N/A	N/A	N/A	TBD	TBD	166	N/A	N/A	N/A
DEP16	N/A	N/A	N/A	TBD	TBD	180	N/A	N/A	N/A
DEP17	N/A	N/A	N/A	TBD	TBD	180	N/A	N/A	N/A
DEP18	N/A	N/A	N/A	TBD	TBD	180	N/A	N/A	N/A

CORROSION EVALUATION

ISSUED BY
RPP-WTP PDC

R11888354

DVP-HTR-00001A/B
Process Ventilation Preheaters

Contents of this document are Dangerous Waste Permit affecting

Results

Materials Considered:

Material (UNS No.)	Acceptable Material
Carbon Steel	
Type 304L (S30403)	
Type 316L (S31603)	X (housing only)
AL-6XN® 6% Mo (N08367)	X (housing only)
Incoloy® 800 (N08800)	X (heating element sheath)
Hastelloy® C-22® (N06022)	X

Recommended Material Types: **Shell (non-heated components) – Type 316 stainless steel (max 0.030% C; dual certified)**
Heating element sheath – Incoloy 800

Minimum Corrosion Allowance: **Shell -- 0.010 inch**
Heater Element Sheath – 0.0 inch

Inputs and References:

- Operating inlet temperature (°F) (norm/max): 124/166F (24590-BOF-M6C-DEP-00009)
- Operating outlet temperature (°F) (norm/max): 124/180 (24590-BOF-M6C-DEP-00009)
- Corrosion allowance (excluding heat transfer surfaces): 0.010 inch (24590-WTP-SRD-ESH-01-001-02)
- Corrosion allowance (heating element sheath): 0.00 inch (24590-WTP-GPG-M-047)
- Location: Room E-0102 (24590-BOF-P1-25-00001)
- Operating conditions are as stated in the applicable sections of the Process Corrosion Data report (24590-BOF-RPT-PR-15-001)

Assumptions and Justification (refer to Section 20– References)

- Heaters raise the temperature of the gas stream to remove excess moisture and protect the downstream HEPA filters.[4]

Operating Restrictions:

- Develop a procedure to control decontamination of component.
- Develop procedure controlling lay-up and storage to minimize corrosion; includes both before operation and during operation.
- Procedures are to be reviewed and accepted by MET prior to use.

Some information on all pages may appear to be illegible, however, the information necessary for assuring adequate design is legible.

Concurrence MB
Operations

REV	DATE	REASON FOR REVISION	ORIGINATE	CHECK	REVIEW	APPROVE
1	3/29/18	Revised sect 17 to discuss DFLAW PIBOD properties	Originator By: Debbie Adler - dladler Org Name: MET Placed: Mar 28, 2018	Checked By: Steven Vail - svvail Org Name: BM Placed: Mar 29, 2018	Reviewed No Comments By: Dr. Robert Davis - rbdavis Org Name: Bechtel Placed: Mar 29, 2018	TErwin
0	12/19/17	Initial Issue	DLAdler	APRangus	RBDavis	TErwin

CORROSION EVALUATION

Please note that source, special nuclear and byproduct materials, as defined in the Atomic Energy Act of 1954 (AEA), are regulated at the U.S. Department of Energy (DOE) facilities exclusively by DOE acting pursuant to its AEA authority. DOE asserts, that pursuant to the AEA, it has sole and exclusive responsibility and authority to regulate source, special nuclear, and byproduct materials at DOE-owned nuclear facilities. Information contained herein on radionuclides is provided for process description purposes only.

This bound document contains a total of 13 sheets.

CORROSION EVALUATION

Corrosion/Erosion Detailed Discussion

The DFLAW EMF Vessel Vent Process System (DVP) receives the vessel vent streams from each of the EMF process vessels. The vessel vent streams are combined in a vent header and then sent through the ventilation system. The ventilation system consists of two identical trains, with one in service and one as backup. Each train has a preheater (DVP-HTR-00001A/B), two-stage high efficiency particulate air (HEPA) filters (DVP-HEPA-00003A/B and -00004A/B), and a fan (DVP-EXHR-00001A/B). The clean ventilation stream is then exhausted to the atmosphere via a stack.

1 General/Uniform Corrosion Analysis

a Background

General corrosion or uniform corrosion is corrosion that is distributed uniformly over the surface of a material without appreciable localization. This leads to relatively uniform thinning on sheet and plate materials and general thinning on one side or the other (or both) for pipe and tubing. It is recognized by a roughening of the surface and usually by the presence of corrosion products. The mechanism of the attack is typically an electrochemical process that takes place at the surface of the material. Differences in composition or orientation between small areas on the metal surface create anodes and cathodes that facilitate the corrosion process.

b Component-Specific Discussion

The anticipated dry-air conditions are not conducive to general corrosion and none is expected because of the low humidity conditions (approximately 40% RH) due to heating of the ventilation stream. Unless there is sustained 65 % relative humidity, corrosion cannot be sustained. Type 316L stainless steel is satisfactory for the housing. Incoloy® 800 is recommended for the heating element sheath because of its oxidation resistance.

2 Pitting Corrosion Analysis

Pitting is localized corrosion of a metal surface that is confined to a point or small area and takes the form of cavities. Pitting corrosion will only be a concern if sufficient moisture is present during normal operation. Shut-down and heat-up thermal transients may allow vapors to condense on the cold surfaces. Locations at crevices, at dead-legs, at low points, and under deposits may host conditions that support corrosion. The constituents in the vapor phase can be aggressive in oxidizing environments when mixed with moisture. Therefore, a material with a higher pitting corrosion resistance than Type 304L is necessary. Type 316L stainless steel, or better, is recommended for this application.

At the stated operating conditions, localized corrosion is not a concern; corrosion will not proceed without an electrolyte present. Type 316L is recommended.

3 Crevice Corrosion Analysis

Crevice corrosion is a form of localized corrosion of a metal or alloy surface at, or immediately adjacent to, an area that is shielded from full exposure to the environment because of close proximity of the metal or alloy to the surface of another material or an adjacent surface of the same metal or alloy. Crevice corrosion is similar to pitting in mechanism. Crevice corrosion will only be a concern if sufficient moisture is present. The humidity is controlled so that there will be no condensation during normal operations.

This is an air handling unit operating at elevated temperatures, above the dew point. Corrosion will not initiate without sufficient electrolyte present.

4 Stress Corrosion Cracking Analysis

Stress corrosion cracking (SCC) is the cracking of a material produced by the combined action of environment, susceptible materials, and sustained tensile stress (residual or applied). Stainless steels and nickel alloys are susceptible to SCC and intergranular SCC due to the presence of halogens in aqueous solutions at temperatures greater than 140 °F. These conditions are not present in the preheater due to the absence of water during normal operations. Susceptibility of these alloys increases with carbide precipitation at the grain boundary adjacent to welds. It is assumed that there will be no condensation in the unit; therefore, the HEPA preheater will not undergo stress corrosion cracking because insufficient moisture will be present.

The temperature of the gas during operation will be greater than the dew point. Corrosion will not initiate without sufficient electrolyte present.

5 End Grain Corrosion Analysis

End grain corrosion is preferential aqueous corrosion that occurs along the worked direction of wrought stainless steels exposed to highly oxidizing acid conditions. End grain corrosion typically is not a major concern, it propagates along the rolling direction of the plate, not necessarily through the cross sectional thickness. In addition, end grain corrosion is exclusive to metallic product forms with exposed end grains from shearing or mechanical cutting. This component does not have any pressure boundary cut ends exposed to the ventilation stream. Also, end grain corrosion will not take place in the component because of the absence of sufficient moisture.

End grain corrosion is not expected to occur in the HEPA preheater because the temperature of the gas will be greater than the dew point of the gas therefore corrosion will not occur in the absence of an electrolyte.

CORROSION EVALUATION

6 Weld Corrosion Analysis

The welds used in the fabrication will follow the WTP specifications and standards for quality workmanship. The materials selected for this fabrication are compatible with the weld filler metals and ASME/AWS practice. Using the welding practices specified for the project there should not be gross micro-segregation, precipitation of secondary phases, formation of unmixed zones, or volatilization of the alloying elements that could lead to localized corrosion of the weld.

This position is justified because the operating temperature and dry air conditions will not corrode because of the lack of the electrolyte for corrosion. Assuming that correct weld procedures are followed, no preferential corrosion of weld beads or heat-affected zones occurs in nitric acid or alkaline-based stream.

7 Microbiologically Influenced Corrosion Analysis

Microbiologically Influenced Corrosion (MIC) refers to corrosion affected by the presence or activity, or both, of microorganisms. Typically, with the exception of cooling water systems and stagnant water, MIC is not observed in operating systems. The HEPA preheater will operate at elevated temperatures and the air is dry. In this system, the stated operating conditions are not suitable for microbial growth.

8 Fatigue/Corrosion Fatigue Analysis

Corrosion-fatigue is the result of the combined action of cyclic stresses and a corrosive environment. The fatigue process is thought to cause rupture of the protective passive film, upon which stainless steel can actively corrode in the localized area of the film rupture. The corrosive environment may also act to reduce the stress necessary for film rupture. The result is that a metal exposed to a corrosive environment and cyclic mechanical load may initiate cracking at conditions at stress levels less than the endurance limit for the material.

The HEPA preheater is not cyclically operated; flow is constant, steady and dry. Thermal cycles and therefore thermal stress is also low and associated with the start-up and shut down of the ventilation system. Corrosion fatigue will not be observed in the HEPA preheater.

The conclusion that corrosion fatigue will not be a problem is based on the low mechanical and thermal cycling, as well as the lack of an electrolyte for corrosion.

9 Vapor Phase Corrosion Analysis

Vapor phase corrosion will not occur in the HEPA preheater conditions because the maximum operation conditions for this component preclude the presence of sufficient moisture.

10 Erosion Analysis

Erosion is the progressive loss of material from a surface resulting from mechanical interaction between a particle and that surface. Solid particle erosion can occur in air, steam, and water fluid systems. When the fluid propels the solid particles at a sufficient velocity and the particle mass is sufficient, the surface can be damaged by the combined effect of millions of individual erosion "scars". The volume fraction of particulates is low and insufficient to accelerate erosion. Also, velocities are not high enough to independently cause erosion.

The solids content and gas velocity in these components are sufficiently low that erosion is not a concern.

11 Galling of Moving Surfaces Analysis

Galling is a form of wear caused by a combination of friction and adhesion between moving surfaces. Under high compressive forces and movement, the friction temperatures cold-weld the two surfaces together at the surface asperities. As the adhesively bonded surface moves some of the bonded material breaks away. Microscopic examination of the galled surface shows some material stuck or even friction welded to the adjacent surface, while the softer of the two surfaces appears gouged with balled-up or torn lumps of material stuck to its surface.

The HEPA preheater does not have any moving surfaces; therefore, galling in not a concern.

12 Fretting/Wear Analysis

Fretting corrosion refers to corrosion damage caused by a slight oscillatory slip between two surfaces. Similar to galling, but at a much smaller movement, the corrosion products and metal debris break off and act as an abrasive between the surfaces, classic 3-body wear problem. This damage is induced under load and repeated relative surface motion, as induced for example by vibration. Pits or grooves and oxide debris characterize this damage, typically found in machinery, bolted assemblies and ball or roller bearings. Contact surfaces exposed to vibration during transportation are exposed to the risk of fretting corrosion. .

The HEPA preheater does not have moving parts. The heater elements are supported such that flow induced vibration or tube support plate fretting should not occur. Fretting corrosion is not expected in this component.

CORROSION EVALUATION

13 Galvanic Corrosion Analysis

Galvanic corrosion is an electrochemical process in which one metal corrodes preferentially to another when both metals are in electrical contact, in the presence of an electrolyte. Dissimilar metals and alloys have different electrode potentials, and when two are in contact in an electrolyte, one metal acts as anode and the other as cathode. The electropotential difference between the dissimilar metals is the driving force for an accelerated attack. A potential difference of more than 200 mV is needed for sufficient driving force to make a difference. Galvanic compatibility is one of the attributes used to select the WTP alloys. Austenitic stainless steels in contact with other austenitic stainless steels do not have sufficient electropotential difference to significantly influence the metal loss.

The HEPA preheater plates, frame, and support materials are all fabricated from austenitic stainless steel, with the exception of the heating elements which are Incoloy® 800, a high nickel iron-chromium alloy. The electrochemical potential difference is small and the gas is dry air and contains insufficient moisture to act as an electrolyte. Galvanic corrosion is not expected to be a corrosion issue under these conditions.

14 Cavitation Analysis

Cavitation corrosion is defined as another synergistic process, the combined influence of mechanical disruption of the metal surface and the corrosion of the active metal. Cavitation occurs when the local fluid pressure drops below the vapor pressure of the fluid resulting in a liquid vapor interface or bubbles to form. Their collapse on the metal surface has sufficient energy to rupture the oxide film and depending on alloy, may be capable of removing metal. Depending on the pressures, this phenomenon can produce steam at the pump suction leg creating what is called a "vapor lock". The fluid chemistry and alloy define corrosion characteristics of the oxide film; however, localization of the cavitation produces a condition where the bubble collapse rate is greater than the ability to passivate, the normally passive alloy can experience accelerated loss. This is most likely to occur in pumps, valves (flow control), orifices, ejectors/eductors, and nozzles.

Cavitation is not expected in a ventilation system.

15 Creep Analysis

Creep is defined as a time-dependent deformation at elevated temperature and constant stress, creep is a thermally activated process. The temperature at which creep begins depends on the alloy composition. Creep failures and stress rupture failures follow the same mechanism and are influenced by similar variables like temperature. Stress rupture is defined as bi-axial creep restricted to pipe like geometries. Creep is found in components subjected to heat for long periods and the creep rate generally increases as the temperature nears the melting point. The actual creep strain rate is defined by three regions depending on the temperature, stress and mechanism. The characterized "creep strain rate" typically refers to the rate in stage II creep. The creep temperature is different for each alloy, the Nickel Development Institute has cataloged the creep properties of the recommended alloys for this component (*High-Temperature Characteristics of Stainless Steels*, NIDI No. 9004, Nickel Development Institute). Creep temperature for these alloys are greater than 800 °F.

The HEPA preheater is operated at elevated temperatures; both creep and oxidation are considered as part of this corrosion evaluation. The HEPA preheater heating element design conditions are conducive to creep. Commercial-off-the-shelf Incoloy 800 sheaths provide high creep resistance for the heating elements. The other materials are not exposed to high temperatures.

16 Inadvertent Nitric Acid Addition

Addition of nitric acid to the ventilation lines is not a plausible scenario.

17 Oxidation

Oxidation is the formation of an oxide scale and is dependent upon alloy, oxygen availability in the atmosphere, and temperature. Oxidation resistance of stainless steels and high nickel corrosion resistant alloys is due to the formation of chromium rich oxides (Cr_2O_3) on the surface. Once formed, the oxide scale slows further oxidation.

The heating elements are sheathed inside an Incoloy® 800 tube. This alloy and design are oxidation resistant for long life and optimum heat transfer needed for heating the stream. The temperature of the housing and other components is low, and oxidation will be insignificant.

Sections of the issued Process Corrosion Data report (PCDS) (attached to the corrosion evaluation) include several references to the *Process Inputs Basis of Design (PIBOD) for LAW and EMF*, 24590-WTP-DB-PET-17-001 which was not issued at the time the PCDS was issued. The PIBOD for LAW and EMF has been issued. Any variance in the values between the PIBOD and PCDS associated with streams and stream characteristics used to evaluate corrosion and erosion have been reviewed and evaluated. The evaluation concluded that the analysis described in this corrosion evaluation was bounding and the material selection recommendations remain as initially issued.

18 Conclusion and Justification

The conclusion of this evaluation is that DVP-HTR-00001A/B can be fabricated from Type 316L stainless steel both of which are sufficiently resistant to uniform corrosion and are suitable for the housing and flange. At the stated operating conditions, localized corrosion is not a major concern because the stream is normally dry. Type 316L is recommended for its improved resistance to pitting corrosion. Incoloy® 800 is recommended for the heating element sheath.

CORROSION EVALUATION

19 Margin

Per 24590-WTP-SRD-ESH-01-001-02, Appendix H "When erosion and corrosion effects can be shown to be negligible or entirely absent, a design corrosion allowance need not be specified." In the reported dry-air conditions, there is insufficient electrolyte for corrosion to proceed. The system is designed with a uniform corrosion allowance of 0.010 inch based on the range of inputs, system knowledge, and engineering judgment/experience. The service conditions used for materials selection have been described above and result in negligible uniform loss. The specified minimum corrosion allowance exceeds the minimum required corrosion allowance which provides margin.

In the HEPA preheaters, the solids content and gas velocity are sufficiently low that localized erosion is not a concern. Since localized erosion effects are not present, additional localized corrosion protection is not required.

This component contains no fluids or electrolyte to promote localized corrosion. While not quantifiable, the largest contributor to the total localized corrosion design margin is the absence of sufficient moisture to form a corrosive electrolyte. During inactive periods of plant operations and prior to initial plant startup, layup and storage procedures will monitor and control condensation.

CORROSION EVALUATION

20 References

1. 24590-BOF-M6C-DEP-00009, *Design Pressure and Temperature Calculation for the EMF DEP / DVP / AFR / NLD / SHR / SNR Systems.*
2. 24590-WTP-GPG-M-047, *Preparation of Corrosion Evaluations.*
3. 24590-BOF-P1-25-00001, *Balance of Facilities LAW Effluent Process Bldg & LAW Effluent Drain Tank Bldg General Arrangement Plan at Elev. 0 ft - 0 in.*
4. 24590-BOF-RPT-PR-15-001, *Direct Feed LAW Process Corrosion Data.*
5. 24590-WTP-DB-PET-17-001, *Process Inputs Basis of Design (PIBOD) for LAW and EMF.*
6. 24590-WTP-SRD-ESH-01-001-02, *Safety Requirements Document Volume II.*
7. NIDI. *High-Temperature Characteristics of Stainless Steels,* Publication No. 9004, Nickel Development Institute. Toronto, Ontario, Canada.

Additional Reading

- 24590-BOF-3PS-MEE0-T0002, *Engineering Specification for DVP HEPA Filter Preheater.*
- 24590-BOF-3ZD-25-00001, *WTP Direct Feed Low Activity Waste (DFLAW) Facility and System Design Descriptions.*
- 24590-BOF-MED-DVP-00001, *Process Ventilation HEPA Filter Preheater.*

CORROSION EVALUATION

PROCESS CORROSION DATA SHEET (extract)

Component(s) (Name/ID #) **Process Ventilation Preheaters (DVP-HTR-00001A&B)**

Facility **EMF**

In Black Cell? **NO**

		Stream ID DEP16
Chemicals	**Unit**	**GASEOUS**
HCl	ppmV	0
HF	ppmV	0
NH3	ppmV	0
NO2	ppmV	0
SO2	ppmV	0
RH	%	40.00
Suspended Solids	wt%	n/a
Temperature	°F	180

CORROSION EVALUATION

24590-BOF-RPT-PR-15-001, Rev 1
Direct Feed LAW Process Corrosion Data

Figure A-10 DVP-HTR-00001 Gas PCDS

	DEP15	DEP16
Maximum Properties		
Suspended Solids [wt %]	n/a	n/a
Total Salts [wt %]	n/a	n/a
Sodium Molarity [M]	n/a	n/a
Relative Humidity [%]	100 (4)	40 (4)
pH	n/a	n/a
Anti-Foam Agent [ppm]	n/a	n/a
TOC [lbm/hr]	TBD	TBD
Pressure [psig]	-0.22 (3)	-0.53 (3)
Temperature [C]	75 (2)	82 (2)
Temperature [F]	166 (5)	180 (2)
Water Flow Rate [lbm/hr]	TBD	TBD
Total Aqueous Flow Rate [lbm/hr]	TBD	TBD
Total Flow Rate [lbm/hr]	TBD	TBD
	VIT VAPOR Combined UserNote DEP Vessel vents to DVP-HTR-00001	VIT VAPOR Inlet air to DVP-HEPA-000034AB

Gases	DEP15 Gas Concentration, ppmv(mL/m3)	DEP16 Gas Concentration, ppmv(mL/m3)
Ar	9280	9280
CH3I	0	0
Cl2	0	0
CO	0	0
CO2	329	329
F2	0	0
H2	0	0
HCl	0	0
HCN	0	0
HF	0	0
I2	0	0
N2	781060	781060
NaCl(s)	0	0
NaCN(s)	0	0
NaF(s)	0	0
NaI(s)	0	0
NH3	0	0
NO	0	0
NO2	0	0
O2	209455	209455
P2O5(s)	0	0
PO2	0	0
SO2	0	0
SO3(s)	0	0

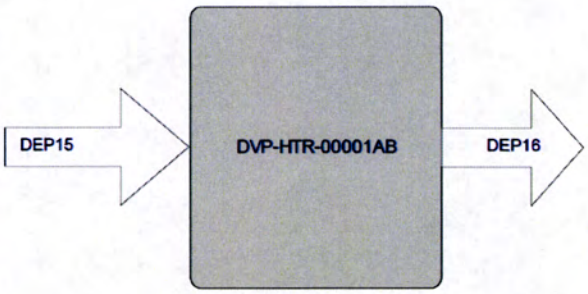

GENERAL NOTE FOR USE OF PCDS:

- *The information provided by the PCDS report is intended solely for use in support of the vessel material selection process and Corrosion Evaluations. The inputs, assumptions, and computational/engineering models used in generating the results presented herein are specific to this effort. Use of the information presented herein for any other purpose will require separate consideration and analysis to support justification of its use for the desired, alternative purpose.*
- *The process descriptions in this report cover routine process operations and non-routine (infrequent) process operations, when such exist, that could impact corrosion or erosion of process equipment.*
- *The data in the non-shaded columns of the PCDSs has NOT been adjusted to comply with the highest expected, vessel-specific operational conditions.*
- *The process descriptions provided in this report are for general information and reflective of the corrosion engineer's analysis for transparency, the information is current only at the time this document is issued. These process descriptions should not be referenced for design.*

4.10.1 Description of Equipment

The DFLAW EMF Vessel Vent Process System (DVP) receives the vessel vent streams from each of the EMF process vessels. The vessel vent streams are combined in a vent header and then sent through the ventilation system. The ventilation system consists of two identical train, with one in service and one as backup. Each train has a preheater (DVP-HTR-00001A/B), two-stage high efficiency particulate air (HEPA) filters (DVP-HEPA-00003A/B and -00004A/B), and a fan (DVP-EXHR-00001A/B). The ventilation stream is then exhausted to the atmosphere via a stack.

Figure 11 is a sketch of the input and output arrangement of streams for the DVP.

Figure 11 – DVP System Sketch

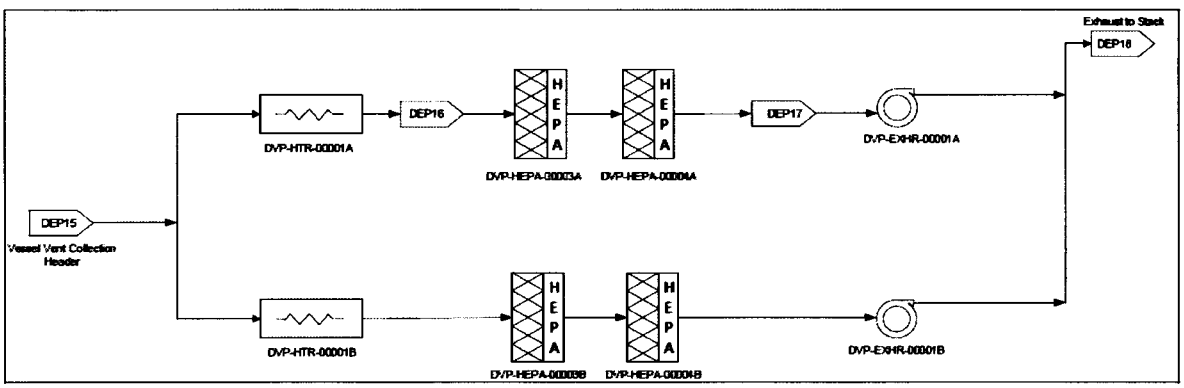

4.10.2 System Functions

The process functions of the DVP system are as follows:

- Draw air
- Remove particulates
- Exhaust air

The equipment performs additional system functions beyond the process functions, but these additional functions are beyond the scope of this document. These functions are not discussed any further in this document, however are listed below for completeness.

- Confine hazardous materials
- Report system conditions

CORROSION EVALUATION

4.10.3 Description of Process Functions

4.10.3.1 Draw Air

The following stream taken from PFD 24590-BOF-M5-V17T-00013 (Ref. 5.1.3(3)) and P&ID 24590-BOF-M6-DVP-00001001 (Ref. 5.1.3(30)) is an input to the EMF process vent system.

- DEP15 – Vessel Vent Collection Header

4.10.3.1.1 DEP15 – Vessel Vent Collection Header

DEP15 is the inlet stream to the EMF process vent system prior to the preheater. DEP15 is the combination of the following individual vessel vent headers:

- DEP06 – Vent Header from DEP-VSL-00004A/B
- DEP07 – Vent Header from DEP-VSL-00002
- DEP08 – Vent Header from DEP-VSL-00001
- DEP09 – Vent Header from DEP-COND-00003
- DEP14– Vent Header from DEP-VSL-00005A/B
- DEP24 - Vent Header from DEP-VSL-00003A/B/C

The properties for DEP15 will bound the properties for these individual vessel vent headers.

Sodium Molarity
N/A, this is a gas stream

Temperature
The range for temperature in stream DEP15 during normal operations will be established in the LAW/EMF PIBOD. The maximum temperature is set equal to 166°F, the maximum vessel temperature of DEP-VSL-00002 (Ref. 5.1.4(3)). This is the maximum temperature of DEP equipment that vents to the DVP system.

Solids Concentration
N/A, this is a gas stream

Density
The range for density in stream DEP15 during normal operations will be established in the LAW/EMF PIBOD.

pH
N/A, this is a gas stream

Relative Humidity
The range for relative humidity in stream DEP15 during normal operations will be established in the LAW/EMF PIBOD.

4.10.3.2 Remove Particulates

The system removes particulates entrained that must be contained and treated before being discharged.

The following streams taken from PFD 24590-BOF-M5-V17T-00013 (Ref. 5.1.3(3)) and P&ID 24590-BOF-M6-DVP-00001001 (Ref. 5.1.3(30)) are the input and output to the HEPA filters.

- DEP16 – Vent stream between the preheater and the first stage HEPA filter
- DEP17 – Vent stream between the second stage HEPA filter and the fan

4.10.3.2.1 DEP16 – Vent Stream between the Preheater and the First Stage HEPA Filter

DEP16 is the vent stream from the preheater (DEP-HTR-00001A/B) to the first stage HEPA filter (DEP-HEPA-00003A/B).

Sodium Molarity
N/A, this is a gas stream

Temperature
The range for temperature in stream DEP16 during normal operations will be established in the LAW/EMF PIBOD. The maximum temperature is equal to 180°F (Ref 5.1.4(9)).

Solids Concentration
N/A, this is a gas stream

Density
The range for density in stream DEP16 during normal operations will be established in the LAW/EMF PIBOD.

pH
N/A, this is a gas stream

Relative Humidity
The range for relative humidity in stream DEP16 during normal operations will be established in the LAW/EMF PIBOD.

4.10.4 Process Modes

4.10.4.1 Normal Operations

Based on the assessment of streams frequently transferred in and out of the DVP system, the following normal processing modes are considered:

- DEP15 – Vessel Vent Collection Header
- DEP16 – Vent stream between the preheater and the first stage HEPA filter
- DEP17 – Vent stream between the second stage HEPA filter and the fan
- DEP18 – Exhaust to stack

Section 4.10.5.1 summarizes these processing modes in tabular form.

4.10.4.2 Infrequent Operations

There are no infrequent operations for the EMF process vent system.

4.10.5 Summary of Processing Conditions for the DVP

4.10.5.1 Normal Operations

The following table summarizes the normal processing modes for DVP.

Table 4-12 - EMF Process Vent System Normal Conditions

	Na Molarity (mol/L)			Temperature (°F)			UDS		
Stream Number	Low	Normal	Upper	Low	Normal	Upper	Low	Normal	Upper
DEP15	N/A	N/A	N/A	TBD	TBD	166	N/A	N/A	N/A
DEP16	N/A	N/A	N/A	TBD	TBD	180	N/A	N/A	N/A
DEP17	N/A	N/A	N/A	TBD	TBD	180	N/A	N/A	N/A
DEP18	N/A	N/A	N/A	TBD	TBD	180	N/A	N/A	N/A

24590-CM-HC4-HXYG-00240-02-~~0008~~ 00030
Rev. 00A
LR 3-29-18

R11881923

orano

FS-18-0074

ISSUED BY
RPP-WTP PDC

March 28, 2018

Ms. Andrea Dorsey
Subcontractor Administrator
Bechtel National, Inc.
2435 Stevens Center Place
Richland, WA 99354

Orano Federal
Services LLC

2101 Horn Rapids Rd
Richland, WA 99354

Tel: +1 509 371 1893

Dear Ms. Dorsey:

BECHTEL NATIONAL, INC. CONTRACT NO. 24590-CM-HC4-HXYG-00240 IQRPE STRUCTURAL INTEGRITY ASSESSMENT REPORT FOR DFLAW DEP VESSELS (DEP-VSL-00004A/B and DEP-VSL-00005A/B) (IA-3021154-000)

The integrity assessment of the subject vessels has been completed per the contract requirements and is enclosed for your use. The assessment found that the design is sufficient to ensure that these vessels are adequately designed and has sufficient structural strength, compatibility with the waste(s) to be processed /stored /treated, and corrosion protection to ensure that it will not collapse, rupture, or fail.

If you have any questions, please contact Tarlok Hundal at (509) 371-1975, or via email at tarlok.hundal@orano.group.

Sincerely,

Tess Klatt
Contract Administrator
Orano Federal Services LLC
Richland Office

lap
cc: J.S. Evans, w/Enclosure (1)

orano

IA-3021154-000

IQRPE STRUCTURAL INTEGRITY ASSESSMENT REPORT FOR DFLAW DEP VESSELS (DEP-VSL-00004A/B and DEP-VSL-00005A/B)

Please note that source, special nuclear and byproduct materials, as defined in the Atomic Energy Act of 1954 (AEA), are regulated at the U.S. Department of Energy (DOE) facilities exclusively by DOE acting pursuant to its AEA authority. DOE asserts that pursuant to the AEA, it has sole and exclusive responsibility and authority to regulate source, special nuclear, and byproduct materials at DOE-owned nuclear facilities. Information contained herein on radionuclides is provided for process description purposes only.

orano

IA-3021154-000

IQRPE STRUCTURAL INTEGRITY ASSESSMENT REPORT FOR DFLAW DEP VESSELS (DEP-VSL-00004A/B and DEP-VSL-00005A/B)

"I, Tarlok Singh Hundal, have reviewed and certified a portion of the design of a new tank system component located at the Hanford Waste Treatment Plant, owned/operated by Department of Energy, Office of River Protection, Richland, Washington. My duties were independent review of the current design for the DFLAW DEP Vessels (DEP-VSL-00004A/B and DEP-VSL-00005A/B) as required by the Washington Administrative Code, *Dangerous Waste Regulations*, Section WAC-173-303-640(3) (a) through (g) applicable components."

"I certify under penalty of law that I have personally examined and am familiar with the information submitted in this document and all attachments and that, based on my inquiry of those individuals immediately responsible for obtaining the information, I believe that the information is true, accurate, and complete. I am aware that there are significant penalties for submitting false information, including the possibility of fine and imprisonment."

The documentation reviewed indicates that the design fully satisfies the requirements of the WAC.

The attached review is ten (10) pages numbered one (1) through ten (10).

TARLOK SINGH HUNDAL
STATE OF WASHINGTON
20213
REGISTERED
PROFESSIONAL ENGINEER

TSHundal

Signature

3/28/2018

Date

Scope	Scope of this Integrity Assessment	The scope of this integrity assessment includes the Direct Feed Low Activity Waste (DFLAW) Effluent Management Facility Process System (DEP) Overhead Sampling Vessels (DEP-VSL-00004A/B) and Process Condensate Lag Storage Vessels (DEP-VSL-00005A/B) and their associated appurtenances. These vessels inclusive of the appurtenances will interchangeably be termed as vessels or plant items in this report. These vessels are vertical; their sizes and locations are as shown on various drawings listed in the References section below.
Summary of Assessment		For each item listed in the "Information Assessed" (i.e., Criteria) column, on pages following the "References" pages, the related documents listed in the "Source of Information" column, were reviewed. The aforementioned documents as described in the "Assessment" column, were found to contain adequate design requirements and controls to ensure that the design fully satisfies the requirements of State of Washington Administrative Code (WAC), Chapter 173-303 WAC, *Dangerous Waste Regulations,* Section WAC-173-303-640 (3) (a) through (g) applicable elements of the *Tank Systems.* Note: Numerous change documents were issued against various documents listed in the "References" section and "Source of Information" column below. The change documents were reviewed and those which had any impact on the "Assessment" results were appropriately included, however, those which did not have any impact on the "Assessment" results were not included herein.

References	Material Requisition, Specifications, and Plant Drawings	Material Requisition (MR): 24590-CM-MRA-MVSC-00007, Rev. 1, Pressure Vessels for EMF-Modification of PTF Vessels. Specifications: The following Specifications with their respective revision and Specification Change Notices (SCNs) are listed in the above listed MR: 24590-BOF-3PS-MVSC-T0003, Engineering Specification for DFLAW Effluent Management Facility Lag Storage and Overhead Sampling Vessels; 24590-WTP-3PS-G000-T0003, Engineering Specification for Packaging, Handling, and Storage Requirements; 24590-WTP-3PS-MVB2-T0001, Engineering Specification for Welding of Pressure Vessels, Heat Exchangers, and Boilers; 24590-WTP-3PS-G000-T0014, Engineering Specification for Supplier Design Analysis; 24590-WTP-3PS-MV00-T0001, Engineering Specification for Pressure Vessel Design and Fabrication;* 24590-WTP-3PS-MV00-T0002, Engineering Specification for Seismic Qualification Criteria for Pressure Vessels;* 24590-WTP-3PS-G000-T0002, Engineering Specification for Positive Material Identification (PMI) for Shop Fabrication;* 24590-WTP-3PS-FB01-T0001, Engineering Specification for Structural Design Loads for Seismic Category III & IV Equipment and Tanks.* *Specification not listed in the MR; however, it is listed in 24590-BOF-3PS-MVSC-T0003. Plant Drawings: 24590-BOF-P1-25-00001, Rev. 1, Balance of Facilities LAW Effluent Process Bldg & LAW Effluent Drain Tank Bldg General Arrangement Plan at Elev. 0'-0"; 24590-BOF-P1-25-00002, Rev. 1, Balance of Facilities LAW Effluent Process Bldg & LAW Effluent Drain Tank Bldg General Arrangement Sections A, B, & C; 24590-BOF-P1-25-00004, Rev. 1, Balance of Facilities LAW Effluent Process Bldg & LAW Effluent Drain Tank Bldg Equipment Location Plan at Elev. 0'-0"- Area 2; 24590-WTP-DD-S13T-00002, Rev. 7, Civil/Structural Standards Standard Embed Plates; 24590-BOF-DD-25-00004, Rev. 2, Effluent Management Facility Vessel Support Ring Beam Details, including WTP-FC-C-0078; 24590-BOF-DD-25-00012, Rev. 1, Effluent Management Facility Concrete Embedment Details Vessel Support Ring Beam Installation; 24590-BOF-DD-25-00021, Rev. 2, LAW Effluent Process Bldg 25 Concrete Embedments Partial Plan at El. 0'-0" Zone 3; 24590-BOF-DB-25-00021, Rev. 4, LAW Effluent Process Bldg 25 Concrete Forming Partial Plan at El. 0'-0" Zone 3; 24590-BOF-M6-DEP-00004001, Rev. 2, P&ID-BOF/EMF Direct Feed LAW EMF Process System Overhead Sampling Vessel DEP-VSL-00004A; 24590-BOF-M6-DEP-00004002, Rev. 2, P&ID-BOF/EMF Direct Feed LAW EMF Process System Overhead Sampling Vessel DEP-VSL-00004B; 24590-BOF-M6-DEP-00006001, Rev. 2, P&ID-BOF/EMF Direct Feed LAW EMF Process System Process Condensate Lag Storage Vessel DEP-VSL-00005A; 24590-BOF-M6-DEP-00006002, Rev. 2, P&ID-BOF/EMF Direct Feed LAW EMF Process System Process Condensate Lag Storage Vessel DEP-VSL-00005B;

References (cont'd)	Plant Drawings, Vendor Fabrication Drawings, Mechanical Data Sheets, and System Design Description.	Plant Drawings (cont'd): 24590-BOF-M5-V17T-00011, Rev. 0, Process Flow Diagram Direct Feed Effluent Transfer (System DEP); 24590-BOF-M5-V17T-00014, Rev. 0, Process Flow Diagram Direct Feed Process Condensate Transfer (System DEP). Vendor Fabrication Drawings (*Bechtel Status Code 1 Drawings): 24590-CM-POA-MVSC-00007-02-00001 (6 Sheets), Rev. 00C, 168" ID Overhead Sampling Vessel (DEP-VSL-00004A); 24590-CM-POA-MVSC-00007-02-00003 (6 Sheets), Rev. 00B, 168" ID Overhead Sampling Vessel (DEP-VSL-00004B); 24590-CM-POA-MVSC-00007-02-00002 (13 Sheets), Rev. 00C, 300" ID Process Condensate Lag Storage Vessel (DEP-VSL-00005B); 24590-CM-POA-MVSC-00007-02-00004 (13 Sheets), Rev. 00B, 300" ID Process Condensate Lag Storage Vessel (DEP-VSL-00005A). * Bechtel Status Code 1 Drawing is an "as fabricated vendor drawing" approved/accepted by Bechtel. Mechanical Data Sheets (MDSs): 24590-BOF-MVD-DEP-00005, Rev. 1, Overhead Sampling Vessel (DEP-VSL-00004A/B), including SDDR-MS-18-00024; 24590-BOF-MVD-DEP-00006, Rev. 1, Process Condensate Lag Storage Vessel (DEP-VSL-00005A/B), including SDDR-MS-18-00024; 24590-BOF-MPD-DEP-00018, Rev. 1, Mixing Eductors for Atmospheric Vessels (DEP-VSL-00004A/B); 24590-BOF-MPD-DEP-00019, Rev. 0, Mixing Eductors for Atmospheric Vessels (DEP-VSL-00005A/B). System Design Description: 24590-BOF-3ZD-25-00001, Rev. 1, WTP Direct Feed Low Activity Waste (DFLAW) Facility and System Design Descriptions.

	Information Assessed	Source of Information	Assessment
Design	Plant Items design standards are appropriate and adequate for the vessel's intended use.	Specifications, Drawings, and Mechanical Data Sheets (MDSs) listed above under References; ASME Boiler and Pressure Vessel Code (B&PV), Section VIII, Division 1, Rules for Construction of Pressure Vessels, American Society of Mechanical Engineers.	The Engineering Specification for DFLAW EMF vessels and their MDSs require that the design and fabrication be per ASME B&PV Code, Section VIII, Division 1, with ASME Code stamp and registration with the National Board of Registration. Supplementary requirements for the vessels and their appurtenances are specified in the listed referenced Engineering Specifications. The supplementary requirements include applicable structural design requirements, thermal loads, positive material identification, fabrication tolerances, welding procedures, welder qualifications and testing records, non-destructive examination (NDE), inspections and records, packaging, handling, and storage requirements. The vessels are identified as Quality Level (CM) and Seismic Category (SC-IV) in the MDSs. The vessels are located in Room E-0106 at Elev. 0'-0" of the EMF. These vertical vessels are of different sizes and stainless materials, as listed in the MDSs and as shown on the drawings. The vessels and other components of the vessels are made up of various steel grades as shown on drawings and the MDSs. The design requirements specified in the codes and specifications are appropriate and adequate for the intended use of these Plant Items (also see the note below). Note: It should be noted that PFT vessels (UFP-VSL-00002A/B) and (HLP-VSL-00027A/B) were originally designed as QL-1 and SC-I with internal PJMs and external jackets as applicable. These vessels have been re-purposed and re-qualified as (DEP-VSL-00004A/B) and (DEP-VSL-00005A/B) respectively, to be QL (CM) and SC-IV. Originally they were designed to much stringent requirements as compared to the downgraded re-purposed SC-IV category requirements. The intended PJMs in vessels 4A/B have not been installed in them. For vessels 5A/B , the PJMs and their support structures do not serve any purpose for their re-use. The vent holes drilled in the top heads of the PJMs will not have any detrimental effect on the parent vessels. The PJMs in fact will have dampening effect, thus reducing the seismic/sloshing forces. No corrosion/erosion is expected for these stainless steel vessel during their storage period as required by the BNI specification; therefore, all in all, the vessels will serve their re-intended purpose during their service life.

	Information Assessed	Source of Information	Assessment
Design (cont'd)	If a non-standard Plant Item is to be used, the design calculations demonstrate sound engineering principles of construction.	Material Requisition, Engineering Specifications, MDSs, and Drawings listed above under References; ASME Boiler and Pressure Vessel Code (B&PV), Section VIII, Division 1, Rules for Construction of Pressure Vessels, American Society of Mechanical Engineers; 24590-CM-POA-MVSC-00007-03-00001, Rev. 00B, Design Calculations, 168" ID Overhead Sampling Vessels (DEP-VSL-00004A/B); 24590-CM-POA-MVSC-00007-03-00002, Rev. 00C, Design Calculations 300" ID Process Condensate Lag Storage Vessels (DEP-VSL-00005A/B).	Vessels (DEP-VSL-00004A/B and DEP-VSL-00005A/B) are non-standard vessels. The Engineering Specification for DFLAW EMF vessels and MDSs require that the design and fabrication of listed vessels be per ASME B&PV Code, Section VIII, Division 1, with ASME Code stamp and registration with the National Board of Registration. Supplementary requirements for the vessels are specified in the listed referenced Engineering Specifications. The supplementary requirements include applicable structural design requirements, thermal loads, fatigue loads, positive material identification, fabrication tolerances, welding procedures, welder qualifications and testing records, Non-Destructive Examination (NDE) inspections and records, packaging, handling, and storage requirements. Review of the listed calculations and drawings show that appropriate applicable load cases and combinations thereof were used utilizing sound engineering principles for the design and construction of the vessels. Furthermore, approval and acceptance of the vendor fabrication drawings and calculations (including various applicable change notices) by Bechtel National Inc.(BNI), is an added assurance that all applicable requirements stated above and as described in documents (including daughter documents) listed in the Material Requisition for each vessel, have been met. The BNI approved and accepted change notice documents were reviewed and found to be in compliance with the applicable design requirements.

	Information Assessed	Source of Information	Assessment
Design (cont'd)	Plant Item has adequate strength, after consideration of the corrosion allowance, to withstand the operating pressure, operating temperature, and seismic loads.	Specifications and MDSs listed above under References; ASME Boiler and Pressure Vessel Code (B&PV), Section VIII, Division 1, Rules for Construction of Pressure Vessels, American Society of Mechanical Engineers; ASME B31.3, Process Piping, ASME Code for Process Piping, American Society of Mechanical Engineers; 24590-CM-POA-MVSC-00007-03-00001, Rev. 00B, Design Calculations, 168" ID Overhead Sampling Vessels (DEP-VSL-00004A/B); 24590-CM-POA-MVSC-00007-03-00002, Rev. 00C, Design Calculations 300" ID Process Condensate Lag Storage Vessels (DEP-VSL-00005A/B).	The Engineering Specification for DFLAW vessels and MDSs require that the listed vessels including all related components and appurtenances be designed and fabricated in accordance with the applicable sections of ASME B&PV Code, Section VIII, Division 1 and ASME B31.3 Codes. These codes require specific consideration of operating pressures, temperatures, corrosion allowance, and seismic loads in the design process. The MDSs identify the operating pressure, temperature ranges, insulation installation to prevent freezing of the waste in the vessels, and seismic categories for these vessels. Corrosion allowance of 0.04" is recommended for these vessels as identified in the MDS documents. The specifications for design of pressure vessels specify requirements for seismic design. The listed calculations reviewed show that the applicable loading parameters were appropriately considered in the design process and the vessels will have adequate strength to sustain them during their design life.

	Information Assessed	Source of Information	Assessment
Foundation	Plant Item foundation will maintain the load of a full vessel.	Specifications and MDS listed above under references; ASME Boiler and Pressure Vessel Code (B&PV), Section VIII, Division 1, Rules for Construction of Pressure Vessels, American Society of Mechanical Engineers; 24590-WTP-DB-ENG-01-001, Rev. 6, Basis of Design; 24590-BOF-DDC-25-00001, Rev. A, LAW Effluent Process and Drain Tank Buildings Vessels Support Anchorage Design; 24590-BOF-DDC-25-00008, Rev. B, LAW Effluent Process and Drain Tank Buildings Ring Beam Design.	The Engineering Specification for DFLAW vessels and MDSs requires the use of ASME B&PV Code, Section VIII, Div. 1 for their design. This code has adequate structural design requirements to ensure proper support for the vessel. The Basis of Design document requires that the supports and foundations shall be designed adequately to sustain all applicable loads including the full weight of the vessel. The review of calculations shows that the supporting mechanism and associated support components of the vessels have been designed adequately to handle the applicable loads. It should be noted that the evaluation of the Plant Items support foundation (concrete floor slabs) is not in the scope of this report. However, it is covered in a separate integrity assessment report titled, "IQRPE Structural Integrity Assessment Report for LAW DFLAW EMF Secondary Containment."

	Information Assessed	Source of Information	Assessment
Foundation (cont'd)	If in an area subject to flooding, the Plant Item is anchored.	Drawings, Specifications, and MDSs listed above under References; 24590-BOF-DDC-25-00001, Rev. A, LAW Effluent Process and Drain Tank Buildings Vessels Support Anchorage Design; 24590-BOF-DDC-25-00008, Rev. B, LAW Effluent Process and Drain Tank Buildings Ring Beam Design; 24590-BOF-M0C-DEP-00001, Rev. B, Flooding /Liner Heights Calculation in the EMF.	As shown on the referenced drawings, the Plant Items are located on the 5 ft. thick concrete floor slab at Elev. 0'-0" in the uncovered Room E-0106 of the EMF. The Specification for Pressure Vessel Design and Fabrication requires that the vessels' supports and anchors shall be designed to secure the buoyant vessel in case the vessel is empty and submerged to the level indicated in the MDS. The MDSs do not indicate any buoyant force load case applicable for anchorage consideration. However, buoyancy check is performed due to the flood height listed in the Flooding/Liner Heights Calculation document. The vessels are evaluated for all other applicable loads including natural phenomena hazard design loads due to seismic event, wind, and snow. Each vessel is supported on a skirt welded to a ring beam which in turn is anchored (welded) to the concrete floor slab embed plates to sustain all applicable loads and combination thereof, as shown in the Design calculation and the drawings.
	Plant Item system will withstand the effects of frost heave.	Drawings listed above under References; 24590-WTP-DC-ST-01-001, Rev. 13, Structural Design Criteria.	The Structural Design Criteria document requires that all structural foundations extend into the surrounding soil below the 30 inch frost line in order to preclude frost heave effects. As shown on the referenced drawings, all vessels (DEP-VSL-00004A/B and DEP-VSL-00005A/B) are located on 5 ft. thick concrete slab at Elev. 0'-0", which obviously precludes any effects of frost heave on these vessels.

	Information Assessed	Source of Information	Assessment
Waste Characteristics	Characteristics of the waste to be stored or treated have been identified (ignitable, reactive, toxic, specific gravity, vapor pressure, flash point, storage temperature)	System Design Description listed above under References; 24590-WTP-PER-PR-03-001, Rev. 2, Prevention of Hydrogen Accumulation in WTP Tank Systems and Miscellaneous Treatment Unit Systems; DE16NWP-003, USDOE Non-Radioactive Air Emissions Notice of Construction Approval Order, Conditions and Restrictions.	The System Design Description and Prevention of Hydrogen Accumulation in WTP Tank Systems documents, indicate that flammable or explosive concentrations of hydrogen are not expected in the DFLAW facility systems. Similarly, the USDOE Approval Order No. DE16NWP-003 addresses compliance to conditions and restrictions set for the non-radioactive toxic air pollutants emissions from the EMF. The above mentioned documents appropriately identify the characteristic of the waste to be handled by the EMF systems.
	Plant Item is designed to store or treat the wastes with the characteristics defined above and any treatment reagents.	MDSs and System Design Description listed above under References; 24590-BOF-N1D-DEP-00004, Rev. 1, Corrosion Evaluation of Overhead Sampling Vessels (DEP-VSL-00004A/B); 24590-BOF-N1D-DEP-00005, Rev. 1, Corrosion Evaluation of Process Condensate Lag Storage Vessels (DEP-VSL-00005A/B).	The Corrosion Evaluation documents and the MDSs adequately demonstrate incorporation of identified waste characteristics into the vessel design. Normal and abnormal operating conditions are discussed in the System Design Description document. Vessels (DEP-VSL-00005A/B) have the capability to receive process service water for decontamination and vessels (DEP-VSL-00004A/B) have the capability to receive sodium hydroxide reagent for chemical adjustment to meet the criteria requirement for returning the concentrated effluent to Tank Farms.
	The waste types are compatible with each other.	System Design Description listed above under References.	The System Design Description document does not list any incompatible waste materials to be handled by the EMF Vessels.

	Information Assessed	Source of Information	Assessment
Corrosion Allowance	Corrosion allowance is adequate for the intended service life of the Plant Item.	Specifications listed above under References; 24590-BOF-N1D-DEP-00004, Rev. 1, Corrosion Evaluation of Overhead Sampling Vessels (DEP-VSL-00004A/B); 24590-BOF-N1D-DEP-00005, Rev. 1, Corrosion Evaluation of Process Condensate Lag Storage Vessels (DEP-VSL-00005A/B).	The Corrosion Evaluation documents specify a corrosion allowance of 0.04" for all vessels. This corrosion allowance is based upon vessels material characteristics and is adequate for their intended use for design service life of 40 years as specified in the Specification for DFLAW vessels.
Pressure Controls	Pressure controls (vents and relief valves) are adequately designed to ensure pressure relief if normal operating pressures in the Plant Item are exceeded.	System Design Description and Drawings listed above under References.	The System Design Description states that the DEP system shall include pressure and waste level sensing capabilities to be monitored remotely. The System Design Description discusses the normal and off-normal operations of the DFLAW DEP system. The administrative controls such as pressure monitors and level sensors ensure that the operating parameters of the vessels are not exceeded. Furthermore, the MDSs list the operating parameters are much less than the actual design parameters which provide added safety margins for the vessels. With all above mentioned controls in addition to vents and overflow lines shown on the drawings; they all prevent over pressurization of the vessels.

24590-CM-HC4-HXYG-00240-02-00031
Rev. 00A

R11881924

FS-18-0075

ISSUED BY
RPP-WTP PDC

March 29, 2018

Ms. Andrea Dorsey
Subcontractor Administrator
Bechtel National, Inc.
2435 Stevens Center Place
Richland, WA 99354

Orano Federal Services LLC

2101 Horn Rapids Rd
Richland, WA 99354

Tel: +1 509 371 1893

Dear Ms. Dorsey:

BECHTEL NATIONAL, INC. CONTRACT NO. 24590-CM-HC4-HXYG-00240 IQRPE STRUCTURAL INTEGRITY ASSESSMENT REPORT FOR DFLAW MISCELLANEOUS UNITS: HEPA FILTER PREHEATERS (DVP-HTR-00001A/B), HEPA FILTER HOUSINGS (DVP-HEPA-00003A/B and DVP-HEPA-00004A/B), EXHAUSTERS (DVP-EXHR-00001A/B) (IA-3021155-000)

The integrity assessment of the subject miscellaneous units has been completed per the contract requirements and is enclosed for your use. The assessment found that the design is sufficient to ensure that these miscellaneous units are adequately designed and has sufficient structural strength, compatibility with the waste(s) to be processed /stored /treated, and corrosion protection to ensure that it will not collapse, rupture, or fail.

If you have any questions, please contact Tarlok Hundal at (509) 371-1975, or via email at tarlok.hundal@orano.group.

Sincerely,

Tess Klatt
Contract Administrator
Orano Federal Services LLC
Richland Office

lap
cc: J.S. Evans, w/Enclosure (1)

orano

IA-3021155-000

IQRPE STRUCTURAL INTEGRITY ASSESSMENT REPORT FOR DFLAW DVP MISCELLANEOUS UNITS: HEPA FILTER PREHEATERS (DVP-HTR-00001A/B) HEPA FILTER HOUSINGS (DVP-HEPA-00003A/B and DVP-HEPA-00004A/B) EXHAUSTERS (DVP-EXHR-00001A/B)

Please note that source, special nuclear and byproduct materials, as defined in the Atomic Energy Act of 1954 (AEA), are regulated at the U.S. Department of Energy (DOE) facilities exclusively by DOE acting pursuant to its AEA authority. DOE asserts that pursuant to the AEA, it has sole and exclusive responsibility and authority to regulate source, special nuclear, and byproduct materials at DOE-owned nuclear facilities. Information contained herein on radionuclides is provided for process description purposes only.

orano

IA-3021155-000

IQRPE STRUCTURAL INTEGRITY ASSESSMENT REPORT
FOR
DFLAW DVP MISCELLANEOUS UNITS:
HEPA FILTER PREHEATERS (DVP-HTR-00001A/B)
HEPA FILTER HOUSINGS (DVP-HEPA-00003A/B and DVP-HEPA-00004A/B)
EXHAUSTERS (DVP-EXHR-00001A/B)

"I, Tarlok Singh Hundal, have reviewed and certified a portion of the design of a new tank system component located at the Hanford Waste Treatment Plant, owned/operated by Department of Energy, Office of River Protection, Richland, Washington. My duties were independent review of the current design for the DFLAW DVP Miscellaneous Units (listed above), as required by the Washington Administrative Code, *Dangerous Waste Regulations*, Section WAC-173-303-640(3) (a) through (g) applicable components."

"I certify under penalty of law that I have personally examined and am familiar with the information submitted in this document and all attachments and that, based on my inquiry of those individuals immediately responsible for obtaining the information, I believe that the information is true, accurate, and complete. I am aware that there are significant penalties for submitting false information, including the possibility of fine and imprisonment."

The documentation reviewed indicates that the design fully satisfies the requirements of the WAC.

The attached review is twenty one (21) pages numbered one (1) through twenty one (21).

TARLOK SINGH HUNDAL
STATE OF WASHINGTON
20213
REGISTERED
PROFESSIONAL ENGINEER

Signature

3/29/2018
Date

-Scope	Scope of this Integrity Assessment	The scope of this integrity assessment of Miscellaneous Units (MUs) associated with the DFLAW DVP System. These MUs comprise of two HEPA Filter Preheaters (DVP-HTR-00001A/B), four HEPA Filter Housings (DVP-HEPA-00003A/B and DVP-HEPA-00004A/B), and two Exhausters (DVP-EXHR-00001A/B). The MUs listed above are interchangeably listed as Plant Items and are located as shown on the drawings listed in the References section below. Preheaters (DVP-HTR-00001A/B) & Exhausters (DVP-EXHR-00001A/B) are located in Room E-0102 at Elev. 0'-0" and HEPA Filter Housings (DVP-HEPA-00003A/B & DVP-HEPA-00004A/B) are located on an elevated platform in Room E-0102A at Elev. 8'-6" of the EMF Process building. The integrity assessments of these MUs are included in the pages listed below: Pages 1-3 Some documents are common to all MUs and some are specific to each MU listed below. Pages 4-9 are for HEPA Filter Preheaters (DVP-HTR-00001A/B); Pages 10-15 are for HEPA Filter Housings (DVP-HEPA-00003A/B and DVP-HEPA-00004A/B); Pages 16-21 are for Exhausters (DVP-EXHR-00001A/B).
Summary of Assessment		For each item of "Information Assessed" (i.e., Criteria) on the following pages, the items listed under "Source of Information" were reviewed and found to furnish adequate design requirements and controls to ensure that the design fully satisfies the requirements of Washington Administrative Code (WAC), Chapter 173-303 WAC, *Dangerous Waste Regulations,* Section WAC-173-303-640 (3) (a) through (g) applicable elements of the *Tank Systems.* <u>Note</u>: Numerous change documents were issued against various documents listed in the "References" section and "Source of Information" column below. The change documents were reviewed and those which had any impact on the "Assessment" results were appropriately included, however, those which did not have any impact on the "Assessment" results were not included herein.

References	Material Requisitions, Specifications, and Plant Drawings	Material Requisitions (MRs): 24590-QL-MRA-MEE0-00004, Rev. 2, DVP HEPA Pre-heater; 24590-QL-MRA-MKH0-00018, Rev. 1, DVP HEPA Filter Housings, including MRCN # M0001, SDDR # MS-17-00026; 24590-QL-MRA-MA00-00001, Rev. 1, DVP Exhauster, including MRCN # M0001. Specifications: The following Specifications with their respective revision and Specification Change Notices (SCNs) are listed in the above listed MRs: 24590-BOF-3PS-MEE0-T0002, Engineering Specification for DVP HEPA Filter Preheaters; 24590-BOF-3PS-MKH0-T0001, Engineering Specification for Effluent Management Facility High Efficiency Particular Air (HEPA) Filter Housing; 24590-BOF-3PS-MACS-T0001, Engineering Specification for DVP Vessel Vent Centrifugal Exhauster; 24590-WTP-3PS-G000-T0003, Engineering Specification for Packaging, Handling, and Storage Requirements; 24590-WTP-3PS-G000-T0014, Engineering Specification for Supplier Design Analysis; 24590-WTP-3PS-G000-T0002, Engineering Specification for Positive Material Identification (PMI) for Shop Fabrication;* 24590-WTP-3PS-FB01-T0001, Engineering Specification for Structural Design Loads for Seismic Category III & IV Equipment and Tanks;* 24590-WTP-3PS-SS00-T0002, Engineering Specification for Welding of Structural Stainless Steel and Welding of Structural Carbon Steel to Structural Stainless Steel.* *Specification not listed in the MR, however, it is listed as a daughter document elsewhere in other related document. Plant Drawings: 24590-BOF-P1-25-00001, Rev. 1, Balance of Facilities LAW Effluent Process Bldg & LAW Effluent Drain Tank Bldg General Arrangement Plan at Elev. 0'-0"; 24590-BOF-P1-25-00002, Rev. 1, Balance of Facilities LAW Effluent Process Bldg & LAW Effluent Drain Tank Bldg General Arrangement Sections A, B & C; 24590-BOF-P1-25-00004, Rev. 1, Balance of Facilities LAW Effluent Process Bldg & LAW Effluent Drain Tank Bldg Equipment Location Drawing Plan at El. 0'-0"-Area 2; 24590-BOF-DD-25-00002, Rev. 4, Effluent Management Facility Pump Support Frame and Eqpt Support Plate Details; 24590-BOF-DD-25-00003, Rev.1, Effluent Management Facility Pump Support Frame and Eqpt Support Frame Details; 24590-BOF-DB-25-00024, Rev. 5, LAW Effluent Process Bldg 25 Concrete Forming Partial Plan at El. 0'-0" Zone 6; 24590-BOF-DD-25-00024, Rev. 2, LAW Effluent Process Bldg 25 Concrete Embedments Partial Plan at El. 0'-0" Zone 6; 24590-BOF-S1-25-00007, Rev. 0, LAW Effluent Process Bldg 25 Structural Steel Rooms E-0101 and E-0102A Framing Plans; 24590-BOF-S1-25-00055, Rev. 0, LAW Effluent Process Bldg 25 Structural Steel Rooms E-0101 and E-0102A Miscellaneous Connections, Sections and Details. 24590-BOF-S1-25-00083, Rev. 0, LAW Effluent Process Bldg 25 Structural Steel Equipment Supports Plans Sections and Details. 24590-BOF-M6-DVP-00001001, Rev. 1, P&ID-BOF/EMF Direct Feed LAW EMF Vessel Vent System DVP-EXHR-00001A/B; 24590-BOF-M8-SDJ-00001, Rev. 0, BOF/EMF Building SDJ Plant Room V&ID Exhaust Stack Monitoring System; 24590-BOF-M5-V17T-00011, Rev. 0, Process Flow Diagram Direct Feed Effluent Transfer (System DEP); 24590-BOF-M5-V17T-00013, Rev. 0, Process Flow Diagram Direct Feed Concentrate Transfer (System DEP and DVP); 24590-BOF-M5-V17T-00014, Rev. 0, Process Flow Diagram Direct Feed Process Condensate Transfer (System DEP).

References (cont'd)	Vendor Drawings, Mechanical Data Sheets, and System Design Description	Vendor Fabrication Drawings (*Bechtel Status Code 1 Drawings): 24590-CD-POA-MEE0-00004-02-00001, Rev. 00C, General Arrangement DVP HEPA Filter Preheater Skid (DVP-HTR-00001A/B); 24590-CD-POA-MEE0-00004-02-00002, Rev. 00C, CSS4F6N33M4SLTJWJ DVP HEPA Filter Preheater Vessel (DVP-HTR-00001A/B); 24590-CD-POA-MEE0-00004-02-00005, Rev. 00B, DVP HEPA Filter Preheater Skid (DVP-HTR-00001A/B); 24590-CD-POA-MEE0-00004-02-00006, Rev. 00B, Preheater Element, SS4F6N33M4XSLTJ, 3.0 kW 480 V 6 Watts/Sq. in.; 24590-CD-POA-MEE0-00004-07-00001, Rev. 00E, SCRP4X-14A-4-1C-UL Control Panel Layout; 24590-CD-POA-MKH0-00018-05-00002 (2 Sheets), Rev. 00B, General Arrangement Drawings (DVP-HEPA-00003A/B and -00004A/B); 24590-CD-POA-MKH0-00018-05-00003 (12 Sheets), Rev. 00C, Assembly and Shop Detail Drawings (DVP-HEPA-00003A/B and -00004A/B); 24590-CD-POA-MKH0-00018-06-00002, Rev. 00B, Material List (DVP-HEPA-00003A/B and -00004A/B); 24590-CD-POA-MA00-00001-02-00001, Rev. 00C, Drawing 3 of 3 Parts Drawing (DVP-EXHR-00001A/B); 24590-CD-POA-MA00-00001-02-00002, Rev. 00C, Drawing 2 of 3 Parts Drawing (DVP-EXHR-00001A/B); 24590-CD-POA-MA00-00001-02-00003, Rev. 00C, Drawing 1 of 3 Exhauster Outline Drawing (DVP-EXHR-00001A/B); 24590-CD-POA-MA00-00001-02-00004, Rev. 00D, Isolator With Integral Seismic Restraint (DVP-EXHR-00001A/B); 24590-CD-POA-MA00-00001-02-00005, Rev. 00C, Fan Vibration Isolation Installation and General Arrangement (DVP-EXHR-00001A/B); 24590-CD-POA-MA00-00001-02-00006, Rev. 00B, Exhauster Hose Details (DVP-EXHR-00001A/B). * Bechtel Status Code 1 Drawing is an "as fabricated vendor drawing" approved/accepted by Bechtel. Mechanical Data Sheets (MDSs): 24590-BOF-MED-DVP-00001, Rev. 1, Process Ventilation HEPA Filter Preheater (DVP-HTR-00001A/B); 24590-BOF-MAD-DVP-00001, Rev. 1, Process Ventilator Exhauster (DVP-EXHR-00001A/B); 24590-BOF-MKD-DVP-00003, Rev. 2, Process Ventilation Exhaust HEPA Filter and Housing (DVP-HEPA-00003A/B); 24590-BOF-MKD-DVP-00004, Rev. 2, Process Ventilation Exhaust HEPA Filter and Housing (DVP-HEPA-00004A/B). System Design Description: 24590-BOF-3ZD-25-00001, Rev. 1, WTP Direct Feed Low Activity Waste (DFLAW) Facility and System Design Descriptions.

Information Assessed		Source of Information	Assessment
Design	Plant Item design standards are appropriate and adequate for the vessel's intended use.	Specifications, Drawings, and MDS listed above under References; ASME AG-1, Code on Nuclear Air and Gas Treatment, American Society of Mechanical Engineers; ASME Boiler and Pressure Vessel (B&PV) Code, Section VIII, Div. 1, Rules for Construction of Pressure Vessels, American Society of Mechanical Engineers; ASME Boiler and Pressure Vessel (B&PV) Code, Section IX, Welding and Brazing Qualifications, American Society of Mechanical Engineers; ASME Boiler and Pressure Vessel (B&PV) Code, Section II, Materials, American Society of Mechanical Engineers; ASME Boiler and Pressure Vessel (B&PV) Code, Section V, Nondestructive Examination, American Society of Mechanical Engineers; ASME B 16.5, Pipe Flanges and Pipe Fittings Standard, American Society of Mechanical Engineers;	The DFLAW HEPA Filter Preheaters (DVP-HTR-00001A/B) are considered as vessels. The Specifications and MDS documents for DVP HEPA Filter Preheater require that the design, fabrication, certification and stamping of components be per applicable sections of the ASME codes and standards listed in the Source of Information column. Supplemental detailed requirements for the HEPA Preheaters fabrication are specified in various engineering specifications listed in the References section herein. These requirements include items such as, positive material identification, fabrication tolerances, welding procedures, welder qualifications, and testing records, Non-Destructive Examination (NDE) inspections and records, packaging, handling, and storage requirements. The MDS for these MUs lists their Safety Class as Non-Safety Quality Level (CM), and Seismic Category (SC-IV). The drawings show that each HEPA Preheater heating element is housed in a 4" stainless steel schedule 40 pipe, supported on steel frame mounted on DVP-SKID-00001. The design requirements listed in the codes and specifications are appropriate and adequate for the intended use of these MUs.

	Information Assessed	Source of Information	Assessment
Design (cont'd)	If a non-standard Plant Item is to be used, the design calculations demonstrate sound engineering principles of construction.	Specifications, Drawings, and MDS listed above under References; ASME AG-1, Code on Nuclear Air and Gas Treatment, American Society of Mechanical Engineers; ASME Boiler and Pressure Vessel (B&PV) Code, Section VIII, Div. 1, Rules for Construction of Pressure Vessels, American Society of Mechanical Engineers; ASME Boiler and Pressure Vessel (B&PV) Code, Section IX, Welding and Brazing Qualifications, American Society of Mechanical Engineers; ASME B 16.5, Pipe Flanges and Pipe Fittings Standard, American Society of Mechanical Engineers; 24590-CD-POA-MEE0-00004-03-00001, Rev. 00D, Vessel ASME VIII, Div. 1 Code Calculation (DVP-HTR-00001A/B); 24590-CD-POA-MEE0-00004-03-00002, Rev. 00D, Flange ASME Section VIII, Div. 1 Code Calculation.	The HEPA Filter Preheaters (DVP-HTR-00001A/B) are non-standard offgas treatment assemblies that are shop fabricated. The Specifications and MDS documents for these units require that the ASME code assemblies be delivered after design, fabrication, inspection, and testing. Review of the drawings and calculations shows that sound engineering principles are used for the design and construction of the HEPA Filter Preheaters components and housings.

Information Assessed		Source of Information	Assessment
Design (cont'd)	Plant Item has adequate strength, after consideration of the corrosion allowance, to withstand the operating pressure, operating temperature, and seismic loads.	Specifications, MDS, and Material Requisition listed above under References; ASME AG-1, Code on Nuclear Air and Gas Treatment, American Society of Mechanical Engineers; ASME Boiler and Pressure Vessel (B&PV) Code, Section VIII, Div. 1, Rules for Construction of Pressure Vessels, American Society of Mechanical Engineers; ASME Boiler and Pressure Vessel (B&PV) Code, Section IX, Welding and Brazing Qualifications, American Society of Mechanical Engineers; ASME B 16.5, Pipe Flanges and Pipe Fittings Standard, American Society of Mechanical Engineers; ASME B31.3, Process Piping, ASME Code for Process Piping, American Society of Mechanical Engineers; UBC 1997, Uniform Building Code, International Conference of Building Officials; 24590-BOF-N1D-DVP-00002, Rev. 1, Corrosion Evaluation of Process Ventilation Preheaters (DVP-HTR-00001A/B); 24590-CD-POA-MEE0-00004-03-00001, Rev. 00D, Vessel ASME VIII, Div. 1 Code Calculation (DVP-HTR-00001A/B); 24590-CD-POA-MEE0-00004-03-00002, Rev. 00D, Flange ASME Section VIII, Div. 1 Code Calculation.	The Specification and MDS documents for HEPA Filter Preheaters require that these MUs including all related components and appurtenances be designed and fabricated in accordance with the applicable sections of ASME codes and standards listed in the Source of Information column. These codes and standards require specific consideration of operating pressures, temperatures, corrosion allowance, and seismic loads in the design process. The MDS for the Preheaters identifies the operating pressure and temperature ranges and seismic categories for them. The Corrosion Evaluation document does not recommend any corrosion allowance for theses units. The UBC 1997 Code specifies the seismic loads for the SC-IV equipment. The listed Design Calculation reviewed shows that the applicable loading parameters were appropriately considered in the design process and the MU housings, will have adequate strength to sustain them during their design life.

	Information Assessed	Source of Information	Assessment
Foundation	Plant Item foundation will maintain the load of a full vessel.	MDS and Drawings listed above under References; 24590-WTP-DB-ENG-01-001, Rev. 6, Basis of Design; 24590-BOF-DDC-25-00015, Rev. A, LAW Effluent Process Building Miscellaneous Equipment Frame Design.	The Basis of Design document requires that the supports and foundations of the MUs shall be designed adequately to sustain all applicable loads including their full weight. The review of Equipment Frame Design report shows that these units are supported on a skid to handle the applicable full loads of the units. It should be noted that the evaluation of the HEPA Filter Preheaters foundation is not in the scope of this report. However, it is covered in a separate integrity assessment report titled, "IQRPE Structural Integrity Assessment Report for LAW DFLAW EMF Secondary Containment."
	If in an area subject to flooding, the Plant Item is anchored.	Drawings and MDS listed above under References; 24590-BOF-DDC-25-00015, Rev. A, LAW Effluent Process Building Miscellaneous Equipment Frame Design.	As shown on the referenced drawings, the MUs included in this assessment are located in Room L-0102 on the 0'-0" floor elevation of the DFLAW facility. The MDS does not list any flooding condition for submergence of these units, therefore, they need not be evaluated for any buoyant forces. However, in order to sustain any other applicable loads such as seismic loads, these units are mounted on a skid which in turn is welded to the equipment frame.
	Plant Item system will withstand the effects of frost heave.	Drawings listed above under References; 24590-WTP-DC-ST-01-001, Rev. 13, Structural Design Criteria.	The Structural Design Criteria document requires that all structural foundations extend into the surrounding soil below the 30 inch frost line in order to preclude frost heave effects. As shown on the referenced drawings, these units (DVP-HTR-00001A/B) are located in Room L -0102 on 5 ft. thick concrete slab at Elev. 0'-00", which obviously precludes any effects of frost heave on these units.

	Information Assessed	Source of Information	Assessment
Waste Characteristics	Characteristics of the waste to be stored or treated have been identified (ignitable, reactive, toxic, specific gravity, vapor pressure, flash point, storage temperature)	System Design Description listed above under References; 24590-WTP-PER-PR-03-001, Rev. 2, Prevention of Hydrogen Accumulation in WTP Tank Systems and Miscellaneous Treatment Unit Systems; DE16NWP-003, USDOE Non-Radioactive Air Emissions Notice of Construction Approval Order, Conditions and Restrictions.	The System Design Description and Prevention of Hydrogen Accumulation in WTP Tank Systems documents, indicate that flammable or explosive concentrations of hydrogen are not expected in the DFLAW facility systems. Similarly, the USDOE Approval Order No. DE16NWP-003 addresses compliance to conditions and restrictions set for the non-radioactive toxic air pollutants emissions from the EMF. The above mentioned documents appropriately identify the characteristic of the waste to be handled by the EMF systems.
	Plant Item is designed to store or treat the wastes with the characteristics defined above and any treatment reagents.	MDS and System Design Description listed above under References.	The MDS adequately demonstrates the incorporation of identified waste characteristics into the MU design. Normal and abnormal operating conditions are discussed in the System Design Description document. No reagents are added to the combined offgas stream at the Preheater units locations.
Compatibility	The waste types are compatible with each other.	System Design Description listed above under References.	The HEPA Filter Preheater units draw gases from various DFLAW plant items and they are used to increase the nominal temperature of the offgas to avoid its condensation in the HEPA filters downstream. The System Design Description document does not identify any compatibility issues relating to the offgas constituents listed above. Therefore, there are no concerns for compatibility of waste types.

	Information Assessed	Source of Information	Assessment
Compatibility (cont'd)	Plant Item material and protective coatings ensure the vessel structure is adequately protected from the corrosive effects of the waste stream and external environments, for the design life of the system.	MDS, Drawings, and System Design Description listed above under References; ASME AG-1, Code on Nuclear Air and Gas Treatment, American Society of Mechanical Engineers;	The stainless steel material selected as indicated in the MDS serves it purpose being corrosion resistant for the anticipated environment. Based upon these considerations, 316L stainless steel material was chosen for the Preheater components directly exposed to the offgas stream and the drawings show that this material is used for fabrication. The material selection and their thicknesses with built in margin of safety are adequate for these MUs. As these units operate in generally dry and actively ventilated conditions, internal/external corrosion is not considered to be an issue. Therefore, the materials selected are adequate to provide the specified 40-year service life.
Corrosion Allowance	Corrosion allowance is adequate for the intended service life of the Plant Item.	Drawings listed above under References; 24590-BOF-N1D-DVP-00002, Rev. 1, Corrosion Evaluation for Process Ventilation Preheaters (DVP-HTR-00001A/B. 24590-CD-POA-MEE0-00004-03-00001, Rev. 00D, Vessel ASME VIII, Div. 1 Code Calculation (DVP-HTR-00001A/B);	The Corrosion Evaluation document specifies corrosion allowance of 0.010" for the HEPA Filter Preheater units. However, the MDS conservatively lists 0.040" to be the corrosion allowance for design. The review of the design calculation and drawings show that the units are properly designed accounting for the specified corrosion allowance and that they will adequately sustain the applicable loads during their intended service life of 40 years.
Pressure Controls	Pressure controls (vents and relief valves) are adequately designed to ensure pressure relief if normal operating pressures in the Plant Item are exceeded.	System Design Description and Specifications listed above under References; 24590-WTP-3PS-P000-T0001, Rev. 6, Engineering Specification for Piping Material Classes General Description and Summary.	The System Design Description document provides a discussion of pressure controls and valves during normal and off-normal operations of the DFLAW offgas DVP System. During normal operations the system is expected to run with little intervention. Since the Filter Pre-heater units heating elements are housed in 4" Schedule 40, 316L stainless steel pipes designed for 15 psig at 195°F. The specification for Piping Material Classes shows that Schedule 40, 316L piping can sustain 195 psig at 200°F, therefore, it has sufficient built in safety factor to accommodate any pressure increases in the system.

Information Assessed		Source of Information	Assessment
Design	Plant Item design a standard are appropriate and adequate for the vessel's intended use.	Specifications, Drawings, and Mechanical Data Sheet listed above under References; ASME AG-1, Code on Nuclear Air and Gas Treatment, American Society of Mechanical Engineers; ASME Boiler and Pressure Vessel (B&PV) Code, Section IX, Welding and Brazing Qualifications, American Society of Mechanical Engineers; ASNT-SNT-TC-1A, American Society of Non-Destructive Testing Recommended Practice.	The HEPA Filter Housings are non-standard offgas treatment assemblies that are shop fabricated. The referenced Material Requisition and Specifications require that the ASME AG-1 Code and ASME B&PV Code, Section IX assemblies be delivered after design, fabrication, inspection, and testing. Supplemental detailed requirements for the HEPA Filters Housings fabrication are specified in various engineering specifications listed in the References section herein. These requirements include items such as, positive material identification, fabrication tolerances, welding procedures, welder qualifications, and testing records, NDE inspections and records, packaging, handling, and storage requirements. The Mechanical Data Sheet (MDS) for these MUs lists their Quality Level (CM) and Seismic Category (SC-IV). The vendor fabrication drawings show that each HEPA Filter Housing unit pressure boundary panels exposed to offgas stream are built with 316L stainless steel plate. All other components of the units including structural support frame are built with 316 or 304/304L stainless steel material. The design requirements specified in the codes and specifications are appropriate and adequate for the intended use of these MUs.

	Information Assessed	Source of Information	Assessment
Design (cont'd)	If a non-standard Plant Item is to be used, the design calculations demonstrate sound engineering principles of construction.	Material Requisitions and Engineering Specifications listed above under References; ASME AG-1, Code on Nuclear Air and Gas Treatment, American Society of Mechanical Engineers; ASME Boiler and Pressure Vessel (B&PV) Code, Section IX, Welding and Brazing Qualifications, American Society of Mechanical Engineers; 24590-CD-POA-MKH0-00018-11-00001, Rev. 00B, Seismic & Stress Analysis Report for HEPA Filters (DVP-HEPA-00003A/B and -00004A/B).	The HEPA Filter Housings are non-standard offgas treatment assemblies that are shop fabricated. The referenced Material Requisition and Specifications require that the ASME AG-1 Code and ASME B&PV Code, Section IX assemblies be delivered after design, fabrication, inspection, and testing. Review of the listed Seismic and Stress Analysis document shows that sound engineering principles were used for the design and construction of the HEPA Filter housings.
	Plant Item has adequate strength, after consideration of the corrosion allowance, to withstand the operating pressure, operating temperature, and seismic loads.	Specifications and MDSs above under References; ASME AG-1, Code on Nuclear Air and Gas Treatment, American Society of Mechanical Engineers; ASME Boiler and Pressure Vessel (B&PV) Code, Section IX, Welding and Brazing Qualifications, American Society of Mechanical Engineers; ASME B31.3, Process Piping, ASME Code for Process Piping, American Society of Mechanical Engineers; UBC 1997, Uniform Building Code, International Conference of Building Officials; 24590-CD-POA-MKH0-00018-11-00001, Rev. 00B, Seismic & Stress Analysis Report for HEPA Filters (DVP-HEPA-00003A/B and -00004A/B).	The Engineering Specification for HEPA Filter Housings and MDSs require that these MUs including all related components and appurtenances be designed and fabricated in accordance with the applicable sections of ASME AG-1 Code, ASME B&PV Code, Section IX, and ASME B31.3 Code. These codes require specific consideration of operating pressures, temperatures, corrosion allowance, and seismic loads in the design process. The MDSs identifies the operating pressure and temperature ranges and seismic categories for the subject MUs. Due to dry air operation, no corrosion allowance is needed. The UBC 1997 Code specifies the seismic loads for the SC-IV equipment. The review of listed Seismic Stress Analysis report and reference documents (inclusive of current design changes as daughter documents) shows that the applicable seismic and other operating loads were appropriately considered in the design process and the MUs will have adequate strength to sustain them during their 40-year service design life.

Information Assessed		Source of Information	Assessment
Foundation	Plant Item foundation will maintain the load of a full vessel.	Specifications and MDSs listed above under References; ASME AG-1, Code on Nuclear Air and Gas Treatment, American Society of Mechanical Engineers; ASME Boiler and Pressure Vessel (B&PV) Code, Section IX, Welding and Brazing Qualifications, American Society of Mechanical Engineers; 24590-WTP-DB-ENG-01-001, Rev. 6, Basis of Design; 24590-BOF-SSC-25-00013, Rev. A, LAW Effluent Process Building Subchange & HEPA Room Structural Steel Design; 24590-BOF-SSC-25-00014, Rev. A, LAW Effluent Process Building Subchange & HEPA Rooms Structural Connection Design; 24590-BOF-SSC-25-00022, Rev. A, LAW Effluent Process Building HEPA Filter Support Frame Design.	The Engineering Specification for HEPA Filter Housings requires the use of ASME AG-1 Code and ASME B&PV Code, Section IX, for their design and fabrication processes. Both of these codes have adequate structural design requirements to ensure proper support for the MUs. The Basis of Design document requires that the supports and foundations shall be designed adequately to sustain all applicable loads including the full weight of the Plant Item. The review of supporting structure calculations shows that the structural components have been designed adequately to handle the applicable full loads of the units. The supporting structure is supported on concrete slab, the evaluation of which is not in the scope of this assessment, however, it is assessed in a separate report titled, "IQRPE Structural Integrity Assessment Report for LAW DFLAW EMF Secondary Containment."
	If in an area subject to flooding, the Plant Item is anchored.	Drawings and MDSs listed above under References; 24590-BOF-SSC-25-00013, Rev. A, LAW Effluent Process Building Subchange & HEPA Room Structural Steel Design; 24590-BOF-SSC-25-00014, Rev. A, LAW Effluent Process Building Subchange & HEPA Rooms Structural Connection Design. 24590-BOF-SSC-25-00022, Rev. A, LAW Effluent Process Building HEPA Filter Support Frame Design.	As shown on the referenced drawings, the MUs included in this assessment are located on an elevated platform in Room E-0102A at Elev. 8'-6" of the DFLAW facility. The MDSs list that submergence condition does not apply to these MUs, therefore, they need not be evaluated for any buoyant forces. However, in order to sustain any other applicable loads such as seismic loads, these units are mounted on structural steel framework as shown in the calculations and drawings.

	Information Assessed	Source of Information	Assessment
Foundation (cont'd)	Plant Item system will withstand the effects of frost heave.	Drawings listed above under References; 24590-WTP-DC-ST-01-001, Rev. 13, Structural Design Criteria.	The Structural Design Criteria document requires that all structural foundations extend into the surrounding soil below the 30 inch frost line in order to preclude frost heave. As shown on the referenced general arrangement drawings, the MUs considered in this assessment are installed in the DFLAW facility Room E-0102A at Elev. 8'-6" which is not subject to frost heave. Therefore, the subject MUs are not subject to the frost heave effects.
Waste Characteristics	Characteristics of the waste to be stored or treated have been identified (ignitable, reactive, toxic, specific gravity, vapor pressure, flash point, storage temperature)	System Design Description listed above under References; 24590-WTP-PER-PR-03-001, Rev. 2, Prevention of Hydrogen Accumulation in WTP Tank Systems and Miscellaneous Treatment Unit Systems; DE16NWP-003, USDOE Non-Radioactive Air Emissions Notice of Construction Approval Order, Conditions and Restrictions.	The System Design Description and Prevention of Hydrogen Accumulation in WTP Tank Systems documents, indicate that flammable or explosive concentrations of hydrogen are not expected in the DFLAW facility systems. Similarly, the USDOE Approval Order No. DE16NWP-003 addresses compliance to conditions and restrictions set for the non-radioactive toxic air pollutants emissions from the EMF. The above mentioned documents appropriately identify the characteristic of the waste to be handled by the EMF systems.
	Plant Item is designed to store or treat the wastes with the characteristics defined above and any treatment reagents.	MDSs and System Design Description listed above under References.	The MDSs adequately demonstrates the incorporation of identified waste characteristics into the MU design. Normal and abnormal operating conditions are discussed in the System Design Description. No reagents are added to the exhaust offgas.

	Information Assessed	Source of Information	Assessment
Compatibility	The waste types are compatible with each other.	System Design Description listed above under References.	The MUs herein assessed draw gases from the DFLAW vessels to remove toxic and radioactive particulates and aerosols from the offgas constituents to protect the downstream equipment from contamination. The System Design Description document does not identify any compatibility issues relating to the offgas constituents listed above. Therefore, there are no concerns for compatibility of waste types.
	Plant Item material and protective coatings ensure the vessel structure is adequately protected from the corrosive effects of the waste stream and external environments, for the design life of the system.	MDSs, Drawings, and System Design Description listed above under References; ASME AG-1, Code on Nuclear Air and Gas Treatment, American Society of Mechanical Engineers;	The stainless steel material selected as indicated in the MDSs serves it purpose being corrosion resistant for the anticipated environment. Based upon these considerations, 316L stainless steel material was chosen for the HEPA Filter housing components directly exposed to the offgas stream and the drawings show that this material is used for fabrication. The material selection and their thicknesses with built in margin of safety are adequate for these MUs. As these units operate in generally dry and actively ventilated conditions, internal/external corrosion is not considered to be an issue. Therefore, the materials selected are adequate to provide the specified 40-year service life.
Corrosion Allowance	Corrosion allowance is adequate for the intended service life of the Plant Item.	MDSs listed above under References.	The HEPA Filter Housing units will be operating in dry environments, therefore, no corrosion will be present in and around them and hence there is no evaluation of any known corrosive environment elements. The equipment is built with 316L stainless steel material and operating under dry-air conditions without any condensation or elements to cause any corrosion.

Information Assessed		Source of Information	Assessment
Pressure Controls	Pressure controls (vents and relief valves) are adequately designed to ensure pressure relief if normal operating pressures in the Plant Item are exceeded.	System Design Description listed above under References.	The System Design Description provides a discussion of normal and off-normal operations of the DFLAW DVP System. During normal operations the system is expected to run with little intervention. However, during off-normal operation, the reduced pressure drop across HEPA Filters in housings may indicate failure. Alarms will notify the operators for investigation of delta pressure reading and manual switching to secondary filter train upon the confirmation of failure. The failed filters are replaced and the primary train is placed back in service. Increase in pressure drop across HEPA Filters will be continuously monitored and scheduled for changing at a specified preset delta pressure level limit. The pressure monitors and controls described above and as shown on the P&ID drawings are adequate to prevent exceeding the pressure design limits of the HEPA Filter Housing units.

	Information Assessed	Source of Information	Assessment
Design	Plant Item design a standard are appropriate and adequate for the vessel's intended use.	Specifications, Drawings, MDS, and Material Requisition listed above under References; AWS Codes, (AWS D1.1) Structural Welding Code, (AWS D 1.3) Steel, Structural Welding Code, Sheet Steel, (AWS D1.6) Structural Welding Code, (AWS D9.1) Stainless Steel, Sheet Metal Welding Code, and (AWS D14.6) Welding of Rotating Elements of Equipment, American Welding Society; ASME Boiler and Pressure Vessel (B&PV) Code, Section IX, Welding and Brazing Qualifications, American Society of Mechanical Engineers; ASME AG-1, Code on Nuclear Air and Gas Treatment, American Society of Mechanical Engineers; ASNT-SNT-TC-1A, American Society of Non-Destructive Testing Recommended Practice.	The Engineering Specification for the Exhausters and MDS require that the design and fabrication be per AWS and ASME codes listed in the Source of Information column. The specification for Exhausters also states that they shall be qualified to be compliant with ASNT-SNT-TC-1A code requirements. Supplemental detailed requirements for the Exhauster housing design and fabrication combined with aforementioned documents are specified in various engineering specifications (inclusive of the sister documents) listed under Material Requisition in the References section herein. These requirements include items such as, positive material identification, fabrication tolerances, welding procedures, welder qualifications, and testing records, NDE inspections and records, packaging, handling, and storage requirements. The MDS for these MUs lists their Safety Class as non-safety, Quality Level (CM), and Seismic Category (SC-IV). The Vendor fabrication drawings show that each Exhauster housing unit including many components are built with 316L stainless steel materials (max. 0.03% Carbon, dual certified) with its shaft made up of 410 stainless steel. Each unit's structural support frame is built with A36 carbon steel material. The design requirements specified in the codes and specifications listed above are appropriate and adequate for the intended use of these MUs.

	Information Assessed	Source of Information	Assessment
Design (cont'd)	If a non-standard Plant Item is to be used, the design calculations demonstrate sound engineering principles of construction.	Material Requisition and Engineering Specifications listed above under References; AWS Codes, (AWS D1.1) Structural Welding Code, (AWS D 1.3) Steel, Structural Welding Code, Sheet Steel, (AWS D1.6) Structural Welding Code, (AWS D9.1) Stainless Steel, Sheet Metal Welding Code, and (AWS D14.6) Welding of Rotating Elements of Equipment, American Welding Society; ASME Boiler and Pressure Vessel (B&PV) Code, Section IX, Welding and Brazing Qualifications, American Society of Mechanical Engineers; ASME AG-1, Code on Nuclear Air and Gas Treatment, American Society of Mechanical Engineers; ASNT-SNT-TC-1A, American Society of Non-Destructive Testing Recommended Practice; 24590-CD-POA-MA00-00001-06-00001, Rev. 00B, Seismic Qualification Report of Exhauster (DVP-EXHR-00001A/B) (Design Calculation).	The Exhauster MUs in the DFLAW DVP system listed above are non-standard offgas handling assemblies and are commercial grade items procured per Engineering Specification for DVD Exhausters and other applicable Specifications listed under Material Requisition in the References section herein. The referenced Material Requisition and Specifications require that the AWS Codes, ASME Codes, and ASNT-SNT-TC-1A Code assemblies be delivered after design, fabrication, inspection, and testing. Review of the Seismic Qualification Report and related documentation shows that sound engineering principles were used for the design, construction, and the acceptance test qualification of the Exhauster Units.

	Information Assessed	Source of Information	Assessment
Design (cont'd)	Plant Item has adequate strength, after consideration of the corrosion allowance, to withstand the operating pressure, operating temperature, and seismic loads.	Specifications, MDS, and Material Requisition listed above under References; AWS Codes, (AWS D1.1) Structural Welding Code, (AWS D 1.3) Steel, Structural Welding Code, Sheet Steel, (AWS D1.6) Structural Welding Code, (AWS D9.1) Stainless Steel, Sheet Metal Welding Code, and (AWS D14.6) Welding of Rotating Elements of Equipment, American Welding Society; ASME Boiler and Pressure Vessel (B&PV) Code, Section IX, Welding and Brazing Qualifications, American Society of Mechanical Engineers; ASME B31.3, Process Piping, ASME Code for Process Piping, American Society of Mechanical Engineers; ASME AG-1, Code on Nuclear Air and Gas Treatment, American Society of Mechanical Engineers; ASNT-SNT-TC-1A, American Society of Non-Destructive Testing Recommended Practice; UBC 1997, Uniform Building Code, International Conference of Building Officials; 24590-CD-POA-MA00-00001-06-00001, Rev. 00B, Seismic Qualification Report of Exhauster (DVP-EXHR-00001A/B) (Design Calculation).	The Engineering Specification for DVP Exhausters and MDS require that these MUs including all related components and appurtenances be designed, fabricated, and/or tested in accordance with the applicable sections of AWS Codes, ASME B&PV Codes, and ASNT-SNT-TC-1A Code, listed in the Source of Information column. These codes and specifications listed under Material Requisition in the References section herein require specific consideration of operating pressures, temperatures, corrosion allowance, and seismic loads and Non-destructive Examination (NDE) testing in the design and fabrication process. The MDS identifies the operating pressure, and temperature ranges and seismic categories for the subject MUs without any corrosion allowance. The UBC 1997 Code specifies the seismic loads for the SC-IV equipment. The review of Seismic Qualification document shows that the applicable loading parameters were appropriately considered in the design and qualification process. Furthermore, the required qualification documentation submitted by Exhausters vendor was reviewed, accepted, and approved by BNI to comply with specification stated parameters and hence the MUs will have adequate strength to sustain applicable loadings during their design-life.

	Information Assessed	Source of Information	Assessment
Foundation	Plant Item foundation will maintain the load of a full vessel.	Drawings listed above under References; 24590-WTP-DB-ENG-01-001, Rev. 6, Basis of Design; 24590-BOF-DDC-25-00015, Rev. A, LAW Effluent Process Building Miscellaneous Equipment Frame Design.	The Basis of Design document requires that the supports and foundations of the MUs shall be designed adequately to sustain all applicable loads including their full weight. The review of Equipment Frame Design document and drawings shows that these units are supported on steel members which in turn are welded to surface plate of the concrete pad to handle the applicable full loads of the units. It should be noted that the evaluation of the Exhausters foundation is not in the scope of this report. However, it is covered in a separate integrity assessment report titled, "IQRPE Structural Integrity Assessment Report for LAW DFLAW EMF Secondary Containment."
	If in an area subject to flooding, the Plant Item is anchored.	Drawings, Specifications, and MDS listed above under References; 24590-BOF-DDC-25-00015, Rev. A, LAW Effluent Process Building Miscellaneous Equipment Frame Design.	As shown on the referenced drawings, the MUs included in this assessment are located on the 0'-0" floor elevation of the DFLAW facility. The MDS does not list any buoyant forces to be considered for anchoring of these units. However, these units as shown in the calculation and drawings, are welded to the surface plate atop the concrete pad to handle other applicable forces including seismic loads.
	Plant Item system will withstand the effects of frost heave.	Drawings listed above under References; 24590-WTP-DC-ST-01-001, Rev. 13, Structural Design Criteria.	The Structural Design Criteria document requires that all structural foundations extend into the surrounding soil below the 30-inch frost line in order to preclude frost heave. As shown on the referenced general arrangement drawings, the MUs considered in this assessment are installed inside the DFLAW facility at Floor Elev. 0'-0" which is not subject to frost heave. Therefore, the subject MUs are not subject to the frost heave effects.

	Information Assessed	Source of Information	Assessment
Waste Characteristics	Characteristics of the waste to be stored or treated have been identified (ignitable, reactive, toxic, specific gravity, vapor pressure, flash point, storage temperature)	System Design Description listed above under References; 24590-WTP-PER-PR-03-001, Rev. 2, Prevention of Hydrogen Accumulation in WTP Tank Systems and Miscellaneous Treatment Unit Systems; DE16NWP-003, USDOE Non-Radioactive Air Emissions Notice of Construction Approval Order, Conditions and Restrictions.	The System Design Description and Prevention of Hydrogen Accumulation in WTP Tank Systems documents, indicate that flammable or explosive concentrations of hydrogen are not expected in the DFLAW facility systems. Similarly, the USDOE Approval Order No. DE16NWP-003 addresses compliance to conditions and restrictions set for the non-radioactive toxic air pollutants emissions from the EMF. The above mentioned documents appropriately identify the characteristic of the waste to be handled by the EMF systems.
	Plant Item is designed to store or treat the wastes with the characteristics defined above and any treatment reagents.	MDS and System Design Description listed above under References.	The MDS adequately demonstrates the incorporation of identified waste characteristics into the MU design. Normal and abnormal operating conditions are discussed in the System Description. No reagents are added to the offgas passing through the Exhausters.
Compatibility	The waste types are compatible with each other.	System Design Description listed above under References.	The Exhausters assessed herein draw effluent gases from the upstream DVP equipment namely Preheaters and HEPA Filter Housings, which remove toxic and radioactive particulates and aerosol constituents from the offgas received from DFLAW vessels. The effluent gases drawn by the Exhausters are sent to the exhaust stack. The System Design Description document does not identify any compatibility issues relating to wastes types processed in various plant items and hence no concern of compatibility in offgas constituents.

	Information Assessed	Source of Information	Assessment
Compatibility (cont'd)	Plant Item material and protective coatings ensure the vessel structure is adequately protected from the corrosive effects of the waste stream and external environments, for the design life of the system.	MDS, Drawings, and System Design Description listed above under References; 24590-BOF-N1D-DVP-00001, Rev. 1, Corrosion Evaluation of Process Ventilation Exhauster (DVP-EXHR-00001A/B).	The stainless steel material selected as indicated in the Corrosion Evaluation and MDS documents serves its purpose being corrosion resistant for the anticipated environment. Based upon these considerations, 316/316L stainless steel material was chosen for the Exhausters components directly exposed to the DVP system offgas stream and the drawings show that this material is used for fabrication. As these units operate in generally dry and actively ventilated conditions, internal or external corrosion is not considered to be an issue. Therefore, the materials selected are adequate to provide specified 40-year service life.
Corrosion Allowance	Corrosion allowance is adequate for the intended service life of the Plant Item.	24590-BOF-N1D-DVP-00001, Rev. 1, Corrosion Evaluation of Process Ventilation Exhauster (DVP-EXHR-00001A/B).	The Corrosion Evaluation document describes that Exhauster Housing built with 316/316L stainless material, operates in dry environment; therefore, it does not recommend any allowance for corrosion for the 40-year service life of the Exhauster Units. This is appropriate for the equipment built with stainless steel materials specified operating under identified conditions.
Pressure Controls	Pressure controls (vents and relief valves) are adequately designed to ensure pressure relief if normal operating pressures in the Plant Item are exceeded.	System Design Description listed above under References.	The System Design Description document provides a discussion of Normal and Off-Normal operations of the DFLAW DVP System. During normal operations the system is expected to run with one Exhauster and the second one is on standby. However, during Off Normal operation, if one of the two Exhausters fails, the standby backup Exhauster is automatically activated. The pressure monitors and controls described for various components of DVP System in the System Design Description document and as shown on the P&ID drawings are adequate to prevent exceeding the pressure design limits of the Exhauster Housing units.

orano

JK 3-29-18

R11881925

HXYG

24590-CM-HC4-~~HXYM~~-00240.02.00032

FS-18-0072 REV. 00A

ISSUED BY
RPP-WTP PDC

JK 3-29-18

March 21, 2018

Ms. Andrea Dorsey
Subcontractor Administrator
Bechtel National, Inc.
2435 Stevens Center Place
Richland, WA 99354

Orano Federal Services LLC

2101 Horn Rapids Rd
Richland, WA 99354

Tel: +1 509 371 1893

Dear Ms. Dorsey:

BECHTEL NATIONAL, INC. CONTRACT NO. 24590-CM-HC4-HXYG-00240 IQRPE STRUCTURAL INTEGRITY ASSESSMENT REPORT FOR DFLAW EMF DEP CRITICAL PIPING ANCILLARY EQUIPMENT (IA-3021153-000)

The integrity assessment of the subject Critical Piping Ancillary Equipment has been completed per the contract requirements and is enclosed for your use. The assessment found that the design is sufficient to ensure that the Critical Piping Ancillary Equipment is adequately designed and has sufficient structural strength, compatibility with the waste(s) to be processed / stored /treated, and corrosion protection to ensure that it will not collapse, rupture, or fail.

If you have any questions, please contact Tarlok Hundal at (509) 371-1975, or via email at tarlok.hundal@orano.group.

Sincerely,

Tess Klatt
Contract Administrator
Orano Federal Services LLC
Richland Office

Lap
cc: J.S. Evans, w/Enclosure (1)

orano

IA-3021153-000

IQRPE STRUCTURAL INTEGRITY ASSESSMENT REPORT FOR DFLAW EMF DEP CRITICAL PIPING ANCILLARY EQUIPMENT

Please note that source, special nuclear and byproduct materials, as defined in the Atomic Energy Act of 1954 (AEA), are regulated at the U.S. Department of Energy (DOE) facilities exclusively by DOE acting pursuant to its AEA authority. DOE asserts that pursuant to the AEA, it has sole and exclusive responsibility and authority to regulate source, special nuclear, and byproduct materials at DOE-owned nuclear facilities. Information contained herein on radionuclides is provided for process description purposes only.

orano

IA-3021153-000

IQRPE STRUCTURAL INTEGRITY ASSESSMENT REPORT FOR DFLAW EMF DEP CRITICAL PIPING ANCILLARY EQUIPMENT

"I, Tarlok Singh Hundal, have reviewed and certified a portion of the design of a new tank system component located at the Hanford Waste Treatment Plant, owned/operated by Department of Energy, Office of River Protection, Richland, Washington. My duties were independent review of the current design for the DFLAW EMF DEP Critical Piping Ancillary Equipment, as required by the Washington Administrative Code, *Dangerous Waste Regulations*, Section WAC-173-303-640(3) (a) through (g) applicable components."

"I certify under penalty of law that I have personally examined and am familiar with the information submitted in this document and all attachments and that, based on my inquiry of those individuals immediately responsible for obtaining the information, I believe that the information is true, accurate, and complete. I am aware that there are significant penalties for submitting false information, including the possibility of fine and imprisonment."

The documentation reviewed indicates that the design fully satisfies the requirements of the WAC.

The attached review is seventeen (17) pages numbered one (1) through seventeen (17).

TARLOK SINGH HUNDAL
STATE OF WASHINGTON
20213
REGISTERED
PROFESSIONAL ENGINEER

Signature

3/21/2018
Date

Scope	Scope of this Integrity Assessment	This integrity assessment addresses the critical piping ancillary equipment associated with the DFLAW Effluent Management Facility (EMF) DVP system. The critical piping ancillary equipment included pipelines, valves, and other items associated with numerous vessels, miscellaneous units or plant items, are conspicuously delineated on the P&ID drawings listed in the References section below. The critical piping ancillary equipment herein will be mainly termed as ancillary equipment, throughout the report.
Summary of Assessment		For each item of "Information Assessed" (i.e., Criteria) on the following pages, the documents listed under "Source of Information" were reviewed and found to furnish adequate design requirements and controls to ensure that the design fully satisfies the requirements of Washington Administrative Code (WAC), Chapter 173-303 WAC, *Dangerous Waste Regulations,* WAC-173-303-640*, Tank Systems.* Note: Numerous change documents were issued against various documents listed in the "References" section and "Source of Information" column below. The change documents were reviewed and those which had any impact on the "Assessment" results were appropriately included, however, those which did not have any impact on the "Assessment" results were not included herein.

References	Drawings	Plant Drawings: 24590-BOF-P1-25-00001, Rev. 1, Balance of Facilities LAW Effluent Process Bldg & LAW Effluent Drain Tank Bldg General Arrangement Plan at El. 0'- 0"; 24590-BOF-P1-25-00002, Rev. 1, Balance of Facilities LAW Effluent Process Bldg & LAW Effluent Drain Tank Bldg General Arrangement Sections A, B & C; 24590-BOF-M5-V17T-00012, Rev. 0, Process Flow Diagram Direct Feed Effluent Evaporator (System DEP); 24590-BOF-M5-V17T-00013, Rev. 0, Process Flow Diagram Direct Feed Concentrate Transfer (System DEP and DVP); 24590-BOF-M6-DEP-00002001, Rev. 1, P&ID-BOF/EMF Direct Feed LAW EMF Process System Evaporator Feed Vessel DEP-VSL-00002; 24590-BOF-M6-DEP-00003001, Rev. 1, P&ID-BOF/EMF Direct Feed LAW EMF Process System Evaporator Separator DEP-EVAP-00001; 24590-BOF-M6-DEP-00003002, Rev. 1, P&ID-BOF/EMF Direct Feed LAW EMF Process System Evaporator Reboiler DEP-RBLR-00001; 24590-BOF-M6-DEP-00003004, Rev. 1, P&ID-BOF/EMF Direct Feed LAW EMF Process System Evaporator Condensers DEP-COND-00001/2/3; 24590-BOF-M6-DEP-00003006, Rev. 1, P&ID-BOF/EMF Direct Feed LAW EMF Process System Reboiler Condensate DEP-VSL-00008.

References (cont'd)	Drawings	Plant Drawings (cont'd): 24590-BOF-P3-DEP-GV00005001, Rev. 0, Balance of Facilities Isometric (Line No. DEP-GV-00005-S11X-1); 24590-BOF-P3-DEP-PW00006001, Rev. 0, Balance of Facilities Isometric (Line No. DEP-PW-00006-S11X-18); 24590-BOF-P3-DEP-PW00006002, Rev. 0, Balance of Facilities Isometric (Line No. DEP-PW-00006-S11X-18); 24590-BOF-P3-DEP-PW00017001, Rev. 0, Balance of Facilities Isometric (Line No. DEP-PW-00017-S11X-2); 24590-BOF-P3-DEP-PW00017002, Rev. 0, Balance of Facilities Isometric (Line No. DEP-PW-00017-S11X-2); 24590-BOF-P3-DEP-PW00017003, Rev. 0, Balance of Facilities Isometric (Line No. DEP-PW-00017-S11X-1.5); 24590-BOF-P3-DEP-PW00018001, Rev. 0, Balance of Facilities Isometric (Line No. DEP-PW-00018-S11X-2); 24590-BOF-P3-DEP-PW00019001, Rev. 0, Balance of Facilities Isometric (Line No. DEP-PW-00019-S11X-2); 24590-BOF-P3-DEP-PW00020001, Rev. 0, Balance of Facilities Isometric (Line No. DEP-PW-00020-S11X-2); 24590-BOF-P3-DEP-PW00020002, Rev. 0, Balance of Facilities Isometric (Line No. DEP-PW-00020-S11X-4); 24590-BOF-P3-DEP-PW00021001, Rev. 0, Balance of Facilities Isometric (Line No. DEP-PW-00021-S11X-4); 24590-BOF-P3-DEP-PW00021002, Rev. 0, Balance of Facilities Isometric (Line No. DEP-PW-00021-S11X-4); 24590-BOF-P3-DEP-PW00023001, Rev. 0, Balance of Facilities Isometric (Line No. DEP-PW-00023-S11X-3); 24590-BOF-P3-DEP-PW00023002, Rev. 0, Balance of Facilities Isometric (Line No. DEP-PW-00023-S11X-3); 24590-BOF-P3-DEP-PW00023003, Rev. 0, Balance of Facilities Isometric (Line No. DEP-PW-00023-S11X-1.5); 24590-BOF-P3-DEP-PW00024001, Rev. 0, Balance of Facilities Isometric (Line No. DEP-PW-00024-S11X-3); 24590-BOF-P3-DEP-PW00025001, Rev. 0, Balance of Facilities Isometric (Line No. DEP-PW-00025-S11X-4); 24590-BOF-P3-DEP-PW00039001, Rev. 0, Balance of Facilities Isometric (Line No. DEP-PW-00039-S11X-2); 24590-BOF-P3-DEP-ZR00050001, Rev. 0, Balance of Facilities Isometric (Line No. DEP-ZR-00050-N11F-2); 24590-BOF-P3-DEP-ZR00051001, Rev. 0, Balance of Facilities Isometric (Line No. DEP-ZR-00051-N11F-2); 24590-BOF-P3-DEP-ZS00035001, Rev. 0, Balance of Facilities Isometric (Line No. DEP-ZS-00035-N11F-16); 24590-BOF-P3-DEP-ZS00035002, Rev. 0, Balance of Facilities Isometric (Line No. DEP-ZS-00035-N11F-16); 24590-BOF-P3-DEP-ZS00036001, Rev. 0, Balance of Facilities Isometric (Line No. DEP-ZS-00036-N11F-12); 24590-BOF-P3-DEP-ZS00054001, Rev. 0, Balance of Facilities Isometric (Line No. DEP-ZS-00054-N11F-12); 24590-BOF-P3-DEP-ZS00017001, Rev. 1, Balance of Facilities Isometric (Line No. DEP-ZS-00017-S11C-02); 24590-BOF-P3-DEP-ZS00017002, Rev. 0, Balance of Facilities Isometric (Line No. DEP-ZS-00017-S11C-02); 24590-BOF-P3-DEP-ZS00017003, Rev. 0, Balance of Facilities Isometric (Line No. DEP-ZS-00017-S11C-02).

References (cont'd)	Drawings	Plant Drawings (Cont'd) Engineered Pipe Support Drawings: 24590-BOF-DEP-H00187, Rev. 0, Pipe Support Drawing; 24590-BOF-DEP-H00188, Rev. 0, Pipe Support Drawing; 24590-BOF-DEP-H00198, Rev. 0, Pipe Support Drawing; 24590-BOF-DEP-H00199, Rev. 0, Pipe Support Drawing; 24590-BOF-DEP-H01047, Rev. 0, Pipe Support Drawing; 24590-BOF-DEP-H01146, Rev. 0, Pipe Support Drawing; 24590-BOF-DEP-H01147, Rev. 0, Pipe Support Drawing; 24590-BOF-DEP-H01438, Rev. 0, Pipe Support Drawing; 24590-BOF-DEP-H01439, Rev. 0, Pipe Support Drawing; 24590-BOF-DEP-H01466, Rev. 0, Pipe Support Drawing; 24590-BOF-DEP-H01640, Rev. 0, Pipe Support Drawing; 24590-BOF-DEP-H01660, Rev. 0, Pipe Support Drawing; 24590-BOF-DEP-H01661, Rev. 0, Pipe Support Drawing; 24590-BOF-DEP-H01682, Rev. 0, Pipe Support Drawing; 24590-BOF-DEP-H01686, Rev. 0, Pipe Support Drawing. Standard Pipe Support Drawings: 24590-WTP-PH-50-00001001, Rev. 4, Standard Pipe Support Details, Axial Stop-Welded (AW); 24590-WTP-PH-50-00003001, Rev. 4, Standard Pipe Support Details, Cantilever-Cantilever (CC); 24590-WTP-PH-50-00012001, Rev. 7, Standard Pipe Support Details, Guide-U Bolts (GU); 24590-WTP-PH-50-00012002, Rev. 6, Standard Pipe Support Details, Guide-U Strap (GU); 24590-WTP-PH-50-00012003, Rev. 4, Standard Pipe Support Details, Guide-U Strap (GU); 24590-WTP-PH-50-00014001, Rev. 1, Standard Pipe Support Details, Rods-Hangers (RH); 24590-WTP-PH-50-00014002, Rev. 1, Standard Pipe Support Details, Rods-Hangers (RH); 24590-WTP-PH-50-00014003, Rev. 1, Standard Pipe Support Details, Rods-Hangers (RH); 24590-WTP-PH-50-00016001, Rev. 4, Standard Pipe Support Details, Shoes-Clamped (SC); 24590-WTP-PH-50-00019001, Rev. 4, Standard Pipe Support Details, Shoes-Welded (SW); 24590-WTP-PH-50-00004001, Rev. 4, Standard Pipe Support Details, Frames- L Shape (FL).

References (cont'd)	MS Line Lists	MS Line Lists: 24590-BOF-M6WX-DEP-00002001, Rev.1, MS Line List for 24590-BOF-M6-DEP-00002001; 24590-BOF-M6WX-DEP-00003001, Rev.1, MS Line List for 24590-BOF-M6-DEP-00003001; 24590-BOF-M6WX-DEP-00003002, Rev.1, MS Line List for 24590-BOF-M6-DEP-00003002; 24590-BOF-M6WX-DEP-00003003, Rev.1, MS Line List for 24590-BOF-M6-DEP-00003003; 24590-BOF-M6WX-DEP-00003004, Rev.1, MS Line List for 24590-BOF-M6-DEP-00003004; 24590-BOF-M6WX-DEP-00003006, Rev.1, MS Line List for 24590-BOF-M6-DEP-00003006.

Information Assessed		Source of Information	Assessment
Design	Ancillary equipment design standards are appropriate and adequate for the equipment's intended use.	Drawings listed above under References; 24590-WTP-DC-PS-01-001, Rev. 9, Pipe Stress Design Criteria Including "Pipe Stress Criteria" and "Span Method Criteria;" ASME B31.3 Code, Process Piping, American Society of Mechanical Engineers; 24590-WTP-RPT-ST-01-001, Rev. 2, RPP-WTP Compliance With Uniform Building Code Seismic Design Requirements.	The Pipe Stress Design Criteria identifies ASME B31.3 as the design code for piping systems of the WTP. Drawings reviewed show that the EMF ancillary equipment is of commercial quality level (CM) grade and is Seismic Category SC-IV. The Pipe Stress Design Criteria and RPP-WTP Compliance documents provide detailed requirements for the SC-IV ancillary equipment design per applicable codes and standards. The codes and standards used are acceptable and adequate for the design of the ancillary equipment for their intended service.

Information Assessed		Source of Information	Assessment
Design (cont'd)	If the ancillary equipment to be used is not built to a design standard, the design calculations demonstrate sound engineering principles of construction.	Drawings listed above under References; 24590-WTP-DC-PS-01-001, Rev. 9, Pipe Stress Design Criteria including "Pipe Stress Criteria" and "Span Method Criteria;" ASME B31.3 Code, Process Piping, American Society of Mechanical Engineers; 24590-WTP-3DP-G04T-00906, Rev. 10, Isometric Drawings and Associated Calculations; 24590-BOF-P6C-DEP-00022, Rev. B, Richland RPP-WTP BOF DFLAW DEP Stress Analysis; 24590-BOF-P6C-DEP-00023, Rev. A, BOF DFLAW DEP Stress Analysis; 24590-BOF-P6C-DEP-00024, Rev. A, Richland RPP-WTP BOF DFLAW DEP Stress Analysis; 24590-BOF-P6C-DEP-00025, Rev. A, Richland RPP-WTP BOF DFLAW DEP Stress Analysis; 24590-WTP-3PS-PH01-T0002, Rev. 7, Engineering Specification for Installation of Pipe Supports; 24590-BOF-M6C-DEP-00009, Rev. B, Design Pressure and Temperature Calculations for the EMF DEP/DVP/AFR/NLD/SHR/SNR Systems; CCN # 303955, EMF DWP Critical Isometrics and Associated Documents to Support Permit Package BOF-010.	The EMF ancillary equipment is built to design standards established for the WTP project. The Pipe Stress Design Criteria specifies that piping is to be designed in accordance with ASME B31.3 Code. The Pipe Stress Design Criteria document lists criterion for critical and non-critical piping. All EMF pipelines represented by the isometrics listed in attachment to CCN # 303955, are critical. The critical piping require pipe stress analysis and pipe support calculations as stated in the Pipe Stress Design Criteria and Isometric Drawings and Associated Calculations documents. The Stress Analysis documents identify the piping material classification and their routing between various plant items in the EMF. The review of the design process and controls described in sample documents listed in the Source of Information column provide adequate assurance that DEP ancillary equipment are properly designed, installed, and verified to meet the requirements of the applicable design criteria established for the project. The review of the aforementioned documents also demonstrates that sound design engineering principles are used for the design and construction of the ancillary equipment.

	Information Assessed	Source of Information	Assessment
Design (cont'd)	Ancillary equipment has adequate strength at the end of its design life to withstand the operating pressure, operating temperature, thermal expansion, and seismic loads. Equipment is protected against physical damage and excessive stress due to settlement, vibration, expansion, or contraction.	24590-WTP-DC-PS-01-001, Rev. 9, Pipe Stress Design Criteria including "Pipe Stress Criteria" and "Span Method Criteria;" ASME B31.3 Code, Process Piping, American Society of Mechanical Engineers; ASME Boiler and Pressure Vessel Code, Section III, Division 1, Rules for Construction of Nuclear Power Plant Components, American Society of Mechanical Engineers; UBC 1997, Uniform Building Code; 24590-WTP-PER-M-02-002, Rev. 4, Materials for Ancillary Equipment; 24590-WTP-GPG-ENG-004, Rev. 3, Design Guide Pipe Stress, Pipe Layout and Support Spacing; 24590-WTP-SE-ENS-03-704, Rev. 0, Seismic Evaluation for Design (Seismic Design of Piping and Pipe Supports).	The Pipe Stress Design Criteria requires the use of the ASME B31.3 Code for process piping design. ASME B31.3 requires explicit consideration of operating pressure, operating temperature, thermal expansion/contraction, settlement, vibration, and corrosion allowance in the design of piping. For the seismic design of Seismic Category (SC-IV) ancillary equipment, applicable sections of ASME Section III, Division 1, Appendix F, and sections of UBC 1997 are used to supplement the requirements of ASME B31.3. Details of the seismic design methods are discussed in the Pipe Stress Design Criteria and Seismic Evaluation documents. The aforementioned documents, including the Design Guide document provide assurance that the ancillary equipment has adequate strength at the end of its design life to withstand all anticipated loads.

Information Assessed		Source of Information	Assessment
Supports	Ancillary equipment supports are adequately designed.	Drawings listed above under References; 24590-WTP-DC-PS-01-001, Rev. 9, Pipe Stress Design Criteria including "Pipe Stress Criteria" and "Span Method Criteria;" 24590-WTP-PER-PS-02-001, Rev. 6, Ancillary Equipment Pipe Support Design; ASME B31.3 Code, Process Piping, American Society of Mechanical Engineers; MSS-SP-58, Pipe Hangers and Supports-Materials, Design, and Manufacture, Manufacturers Standardization Society of the Valve and Fittings Industry, Inc.; AISC Manual of Steel Construction, ASD, 9th Edition, American Institute of Steel Construction; ASME Boiler and Pressure Vessel (B&PV) Code, Section III, Division 1, Rules for Construction of Nuclear Power Plant Components, American Society of Mechanical Engineers; 24590-WTP-VV-PS-01-002, Rev. 10, Verification and Validation Test Plan/Test Report for ME150 Pipe Support Family of Programs (PCFAPPS); 24590-WTP-VV-PS-01-001, Rev. 6, Verification and Validation Test Plan/Test Report for ME101, Linear Elastic Analysis of Piping; 24590-WTP-GPG-ENG-005, Rev. 8, Engineering Design Guide for Pipe Supports; 24590-WTP-DC-PS-01-002, Rev. 8, Pipe Support Design Criteria; 24590-BOF-PHC-DEP-00176, Rev. 0, RPP-WTP Engineered Support Calculation for BOF-DEP-H01439; 24590-BOF-PHC-DEP-00195, Rev. 0, RPP-WTP Engineered Support Calculation for BOF-DEP-H01640; 24590-BOF-PHC-DEP-00200, Rev. 0, RPP-WTP Engineered Support Calculation for BOF-DEP-H01660, -H01661, -H01682 & -H01686; 24590-BOF-PHC-DEP-00201, Rev. 0, RPP-WTP Engineered Support Calculation for BOF-DEP-H00187, -H00188, -H00198 & -H00199; 24590-BOF-PHC-DEP-00202, Rev. 0, RPP-WTP Engineered Support Calculation for BOF-DEP-H01146 and -H01147; 24590-WTP-PHC-P50T-00002, Rev. 1, Justification for the use of Standard Supports for RPP-WTP-Project; 24590-WTP-3DP-G04T-00906, Rev. 10, Isometric Drawings and Associated Calculations; 24590-WTP-PHC-P50-00001, Rev. 1, RPP/WTP Support Standards. CCN # 303955, EMF DWP Critical Isometrics and Associated Documents to Support Permit Package BOF-010.	The Pipe Support Design Criteria document considers all loadings identified in ASME B31.3 including MSS-SP-58 and AISC Manual and also utilizes ASME B&PV Code, Section III, Division 1, and Appendix F, to supplement the requirements of ASME B31.3 for design of Seismic Category (SC-IV) pipe supports. The Pipe Stress Design Criteria document lists criterion for critical and non-critical piping. All EMF pipelines represented by the isometrics listed in attachment to CCN # 303955 are critical, therefore, formal analysis of pipe stress and pipe support calculations are required for them, as stated in the Pipe Stress Design Criteria and Isometric Drawings and Associated Calculations documents. Supports spacing and details of the seismic design methodology are discussed in the Pipe Support Design Criteria document. Examples of typical ancillary equipment supports are shown in the Ancillary Equipment Pipe Support Design document. Design/Analysis is by manual calculation and/or approved computer programs that have been verified and validated. Ancillary equipment supports are to be designed to allow a minimum of heat to be transferred to the building structures such that the temperature of the building structures does not exceed 150°F for concrete and steel, except for sleeve penetrations where the temperature may rise up to 200°F. Review of the isometric drawings, pipe stress analyses, standard pipe support drawings, engineered pipe support calculations and drawings, and of the design process and controls described in Pipe Support Design Criteria and Isometric Drawings and Associated Calculations documents provides sufficient assurance that DEP ancillary equipment; piping and supports are adequately designed, installed, and verified to meet the requirements of the applicable design criteria established for the project.

Information Assessed		Source of Information	Assessment
Foundations	The system will withstand the effects of frost heave.	Drawings listed above under References; 24590-WTP-DC-ST-01-001, Rev. 13, Structural Design Criteria.	The Structural Design Criteria requires that all outdoor equipment structural foundations shall extend into the surrounding soil below the 30" frost line to preclude frost heave. The DEP ancillary equipment system considered in this assessment are located inside the DFLAW facility rooms, at above ground floor slab elevation, as shown on the drawings, therefore, they are not subjected to any frost heave effects.
Connections	Seams and connections are adequately designed.	24590-WTP-DC-PS-01-001, Rev. 9, Pipe Stress Design Criteria including "Pipe Stress Criteria" and "Span Method Criteria;" ASME B31.3 Code, Process Piping, American Society of Mechanical Engineers; ASME B16.5, Piping Flanges and Flanged Fittings, American Society of Mechanical Engineers; ASME Boiler and Pressure Vessel Code (B&PV), Section IX, Welding and Brazing Qualifications, American Society of Mechanical Engineers.	The Pipe Stress Design Criteria specifies the ASME B31.3 Process Piping design code for the piping systems. Welding is to be performed in accordance with the requirements of ASME B31.3 and the ASME B&PV Code, Section IX. ASME B16.5 is specified for flange designs. These are appropriate and adequate codes and standards for design and fabrication including, connections and seams of the DEP system ancillary equipment.

	Information Assessed	Source of Information	Assessment
Waste Characteristics	Characteristics of the waste to be stored or treated have been identified (ignitable, reactive, toxic, specific gravity, vapor pressure, flash point, temperature).	24590-BOF-3ZD-25-00001, Rev. 1, WTP Direct Low Activity Waste (DFLAW) Facility and System Design Descriptions; 24590-WTP-PER-PR-03-001, Rev. 2, Prevention of Hydrogen Accumulation in WTP Tank Systems and Miscellaneous Treatment Unit Systems; DE16NWP-003, USDOE Non-Radioactive Air Emissions Notice of Construction Approval Order, Conditions and Restrictions.	The DFLAW Facility System Design Descriptions, Prevention of Hydrogen Accumulation in WTP Tank Systems documents, indicate that flammable or explosive concentrations of hydrogen are not expected in the DFLAW facility systems ancillary equipment. Similarly, the USDOE Approval Order No. DE16NWP-003 addresses compliance to conditions and restrictions set for the non-radioactive toxic air pollutants emissions from the EMF. The above mentioned documents appropriately identify the characteristic of the waste to be handled by the DEP system.

Information Assessed		Source of Information	Assessment
Waste Characteristics (cont'd)	Ancillary equipment is designed to handle the wastes with the characteristics defined above and any treatment reagents.	24590-WTP-PER-M-02-002, Rev. 4, Materials for Ancillary Equipment. 24590-BOF-P6C-DEP-00022, Rev. B, Richland RPP-WTP BOF DFLAW DEP Stress Analysis; 24590-BOF-P6C-DEP-00023, Rev. A, BOF DFLAW DEP Stress Analysis; 24590-BOF-P6C-DEP-00024, Rev. A, Richland RPP-WTP BOF DFLAW DEP Stress Analysis; 24590-BOF-P6C-DEP-00025, Rev. A, Richland RPP-WTP BOF DFLAW DEP Stress Analysis; 24950-WTP-PER-PL-02-001, Rev. 8, Piping Material Class Description; 24590-CM-POA-MEVV-00003-05-00001, Rev. 00C, DEP Evaporator Primary Condenser; 24590-CM-POA-MEVV-00003-05-00002, Rev. 00D, DEP Evaporator Separator; 24590-CM-POA-MEVV-00003-05-00003, Rev. 00E, DEP Evaporator Reboiler; 24590-CM-POA-ME00-00003-04-00001, Rev. 00C, DEP Evaporator After-Condenser; 24590-CM-POA-ME00-00003-04-00004, Rev. 00C, DEP Evaporator Inter-Condenser.	The Materials for Ancillary Equipment document specifies that ancillary equipment materials that contact the waste are to be equal to or better than those of the upstream source vessels or units. Review of documents listed in the Source of Information column reveals that the materials of the source plant items and that of the downstream ancillary equipment meet the requirements stated in the Materials for Ancillary Equipment document. Therefore, selection of proper material for the DEP piping and equipment ensures that the ancillary equipment is appropriately designed to handle the waste without addition of any treatment reagents.

	Information Assessed	Source of Information	Assessment
Compatibility	The pH range of the waste, waste temperature, and the corrosion behavior of the structural materials are adequately addressed. Ancillary equipment material and protective coatings ensure the ancillary equipment structure is adequately protected from the corrosive effects of the waste stream and external environments. The protection is sufficient to ensure the equipment will not leak or fail for the design life of the system.	24590-WTP-DB-ENG-01-001, Rev. 6, Basis of Design; 24590-WTP-PER-M-02-002, Rev. 4, Materials for Ancillary Equipment.	The Basis of Design document identifies a service design life of 40 years for the ancillary equipment. Detailed materials selection with corrosion evaluations are conducted for each vessel in the EMF facility during process design to assure a 40-year service life. The Materials for Ancillary Equipment document requires that the material selection and corrosion/erosion allowances for ancillary equipment in contact with the waste will be equal to or better than the material and corrosion allowance of the waste source vessel. The evaluation in the Waste Characteristics section above discusses the review of the sources plant units materials and that of the downstream piping equipment with a conclusion that the EMF ancillary equipment will provide the expected design service life same as provided by the associated vessels.

	Information Assessed	Source of Information	Assessment
Corrosion Allowance	Corrosion allowance is adequate for the intended service life of the ancillary equipment.	Drawings listed above under References; ASME B31.3 Code, Process Piping, American Society of Mechanical Engineers; 24590-WTP-DC-PS-01-001, Rev. 9, Pipe Stress Design Criteria including "Pipe Stress Criteria" and "Span Method Criteria;" 24590-WTP-DB-ENG-01-001, Rev. 6, Basis of Design; 24590-WTP-PER-M-02-002, Rev. 4, Materials for Ancillary Equipment; 24950-WTP-PER-PL-02-001, Rev. 8, Piping Material Class Description. 24590-CM-POA-MEVV-00003-05-00001, Rev. 00C, DEP Evaporator Primary Condenser; 24590-CM-POA-MEVV-00003-05-00002, Rev. 00D, DEP Evaporator Separator; 24590-CM-POA-MEVV-00003-05-00003, Rev. 00E, DEP Evaporator Reboiler; 24590-CM-POA-ME00-00003-04-00001, Rev. 00C, DEP Evaporator After-Condenser; 24590-CM-POA-ME00-00003-04-00004, Rev. 00C, DEP Evaporator Inter-Condenser.	ASME B31.3 is the design code for the WTP piping. Consideration of corrosion, including corrosion allowance, is a mandatory requirement of ASME B31.3 and is appropriately supplemented in the Pipe Stress Design Criteria document. A required service life of 40 years is identified in the Basis of Design for ancillary equipment. Detailed materials selection (corrosion) evaluations are conducted for each vessel in the EMF facility during process design to ensure a 40-year service life. The Materials for Ancillary Equipment document states that the ancillary equipment downstream of a source vessel is to be constructed of the same (or better) material as the vessel and with the same or greater corrosion allowance. However, if downstream ancillary equipment warrants a different material or corrosion allowance, approval from the Material Engineering Technology (MET) group is required. Corrosion/Erosion allowances are listed for the ancillary equipment (each piping class and associated valves, fittings, etc.) in the Piping Material Class Description document. Review of the documents listed in the "Source of Information" column, reveals that the ancillary equipment materials with appropriate corrosion allowance are adequate for their intended service life.

Information Assessed		Source of Information	Assessment
Pressure Controls	Pressure controls (vents and relief valves) are adequately designed to ensure pressure relief if normal operating pressures in the vessels are exceeded.	24590-WTP-DC-PS-01-001, Rev. 9, Pipe Stress Design Criteria including "Pipe Stress Criteria" and "Span Method Criteria;" ASME B31.3 Code, Process Piping, American Society of Mechanical Engineers.	The Pipe Stress Design Criteria document specifies ASME B31.3 as the design code for the WTP piping. ASME B31.3 requires provision be made to safely contain or relieve any pressure to which the piping may be subjected. ASME B31.3 piping not protected by a pressure relieving device, or that can be isolated from a pressure relieving device must be designed for at least the highest pressure that can be developed. Compliant to the above listed documents ensures that the ancillary equipment is adequately designed to sustain any above normal operating pressure in the vessels.

	Information Assessed	Source of Information	Assessment
Pressure Controls (cont'd)	Maximum flows and any unusual operating stresses are identified.	Drawings listed above under References; 24590-WTP-DC-PS-01-001, Rev. 9, Pipe Stress Design Criteria including "Pipe Stress Criteria" and "Span Method Criteria;" ASME B31.3 Code, Process Piping, American Society of Mechanical Engineers; 24590-WTP-3PS-P000-T0001, Rev. 6, Engineering Specification for Piping Material Classes General Description and Summary ; 24590-WTP-PER-PL-02-001, Rev. 8, Piping Material Class Description; 24590-WTP-3DP-G04T-00906, Rev. 10, Isometric Drawings and Associated Calculations.	The expected flow paths for the ancillary equipment are identified on the P&ID drawings. The Pipe Stress Design Criteria specifies the ASME B31.3 code for piping design. This code requires piping to be designed to the highest pressure that can be developed in a piping system assuring that maximum operating stresses remain within code allowables. Piping material classes are shown on the P&ID drawings, embedded in the item numbers for each ancillary equipment component. The ancillary equipment is designed for the highest anticipated temperature and pressure values which are also within the bounding maximum design temperature and pressure values listed for each piping material class in the Specification for Piping Material Classes and Piping Material Class Description documents. ASME B31.3 and the associated standards are appropriate and adequate for the design of the ancillary equipment. Furthermore, the fabrication of isometric drawings released for construction by Bechtel National, Inc. (BNI), and the design process and controls described in the Isometric Drawings and Associated Calculations documents provide adequate assurance that subject ancillary equipment are properly designed, installed, and verified to meet the requirements identified in the applicable design criteria established for the project.

	Information Assessed	Source of Information	Assessment
Secondary Containment	Ancillary equipment is designed with secondary containment that is constructed of materials compatible with the waste and of sufficient strength to prevent failure (pressure gradients, waste, climatic conditions, daily operations), provided with a leak-detection system, and designed to drain and remove liquids.	Drawings listed above under References; 24590-WTP-3PS-NLLR-T0002, Rev. 1, Engineering Specification for Furnishing, Detailing, Fabrication, Delivery and Installation of Stainless Steel Liner Plates; 24590-WTP-3PS-AFPS-T0006, Rev. 3, Engineering Specification for Field Applied Special Protective Coatings for Secondary Containment Areas; 24590-WTP-PER-CSA-02-001, Rev. 11, Secondary Containment Design; 24590-BOF-PER-M-16-001, Rev. 0, Leak Detection Capability in the EMF Facility; 24590-BOF-PER-M-16-002, Rev. 0, Waste Removal Capability for the Direct Feed LAW Effluent Management Facility (EMF); 24590-BOF-M0C-DEP-00001, Rev. B, Liner Height Calculation in the EMF.	The EMF facility DEP system ancillary equipment considered in this assessment runs between various plant items as shown on the drawings. The secondary containment for the ancillary equipment and the associated vessels and plant items is provided by stainless steel liner plates and has numerous sumps as shown on the general arrangement drawings and in the Leak Detection Capability document. The removal of leaked waste is accomplished per the Waste Removal Capability document. The design and installation of secondary containment stainless steel liner plates and special protective coatings are accomplished per the documents listed in the Source of Information column. The secondary containment stainless steel liner plates are anchored to the concrete floor and wall structures of the EMF facility. The structural integrity assessment of the above mentioned concrete structures is outside the scope of this assessment; however, it is conducted in a separate document titled, "IQRPE Structural Integrity Assessment Report for LAW DFLAW EMF Secondary Containment."