1231544
[00796446H]

PNL-7147
UC-402,407

Final Report
Soil-Gas Survey at the Solid Waste Landfill

J. C. Evans
R. M. Fruland
D. W. Glover
C. Veverka

December 1989

Prepared for the U.S. Department of Energy
under Contract DE-AC06-76RLO 1830

Pacific Northwest Laboratory
Operated for the U.S. Department of Energy
by Battelle Memorial Institute

Battelle

RECEIVED
OCT 26 2015
EDMC

PNL-7147

v2

1231544

DISCLAIMER

This program was prepared as an account of work sponsored by an agency of the United States Government. Neither the United States Government nor any agency thereof, nor Battelle Memorial Institute, nor any of their employees, makes **any warranty, express or implied, or assumes any legal liability or responsibility for the accuracy, completeness, or usefulness of any information, apparatus, product, or process disclosed, or represents that its use would not infringe privately owned rights.** Reference herein to any specific commerical product, process, or service by trade name, trademark, manufacturer, or otherwise, does not necessarily constitute or imply its endorsement, recommendation, or favoring by the United States Government or any agency thereof, or Battelle Memorial Institute. The views and opinions of authors expressed herein do not necessarily state or reflect those of the United States Government or any agency thereof.

PACIFIC NORTHWEST LABORATORY
operated by
BATTELLE MEMORIAL INSTITUTE
for the
UNITED STATES DEPARTMENT OF ENERGY
under Contract DE-AC06-76RLO 1830

Printed in the United States of America
Available from
National Technical Information Service
United States Department of Commerce
5285 Port Royal Road
Springfield, Virginia 22161

NTIS Price Codes
Microfiche A01

Printed Copy

Pages	Price Codes
001-025	A02
026-050	A03
051-075	A04
076-100	A05
101-125	A06
126-150	A07
151-175	A08
176-200	A09
201-225	A10
226-250	A11
251-275	A12
276-300	A13

RECEIVED
OCT 26 2015
OSTI

3 3679 00056 6861

PNL-7147
UC-402, 407

FINAL REPORT
SOIL-GAS SURVEY AT THE SOLID WASTE LANDFILL

J. C. Evans
R. M. Fruland
D. W. Glover
C. Veverka

December 1989

Prepared for
the U.S. Department of Energy
under Contract DE-AC06-76RLO 1830

Pacific Northwest Laboratory
Richland, Washington 99352

SUMMARY

A soil-gas survey to determine the lateral distribution of chlorinated hydrocarbon solvents in the vadose zone, and possibly ground water, was conducted at the Hanford Site Solid Waste Landfill. For a 2-year period, three trenches just inside the western perimeter of the landfill had received liquid discharges of both sewage and washwater, which contained solvents. Ground-water monitoring wells, installed a few months after liquid discharge had been discontinued, indicated very low levels (less than 10 ppb) of solvents exist in the ground water downgradient from the disposal trenches.

The soil-gas survey found subsurface concentrations of chlorinated hydrocarbon solvents exist to the south and east of the disposal trenches but within the landfill boundary. The same chlorinated hydrocarbon solvents were found as have been reported in the ground water. In addition, carbon dioxide and methane measurements, initiated part way through the survey, show similar distributions to those of the solvents. The chlorinated hydrocarbon distribution in the soil column is probably related to the sewage disposal in the same trenches, in spite of the differences between their physical and chemical properties. The soil-gas survey method is useful for lateral delineation of contamination, but the survey reported here is limited in its ability to determine vertical distribution of contaminants.

CONTENTS

SUMMARY iii

INTRODUCTION 1

GEOLOGY AND HYDROLOGY 1

SOIL CONDITIONS AT THE SOLID WASTE LANDFILL 3

INITIATION OF SOIL-GAS WORK AT THE SOLID WASTE LANDFILL 5

EXPERIMENTAL 5

DISCUSSION OF RESULTS 10

Trichloroethane Distribution 10

Perchloroethene Distribution 16

Trichloroethene Distribution 16

Carbon Dioxide Distribution 17

Methane Distribution 17

Carbon Tetrachloride Distribution 18

CONCLUSIONS 19

REFERENCES 21

APPENDIX A - CHLORINATED HYDROCARBON MEASUREMENTS AT THE SOLID WASTE LANDFILL GROUND-WATER WELLS A.1

APPENDIX B - HANFORD SITE SOIL-GAS ANALYSIS PROTOCOL B.1

FIGURES

1 Ground-Water Monitoring Network at the Solid Waste Landfill, Nonradioactive Dangerous Waste Landfill, and Nearby Site Well 699-24-33 2

2 Sample Point Locations for the Solid Waste Landfill Soil-Gas Survey 4

3 Soil-Gas Survey Results for Trichloroethane 11

4 Soil-Gas Survey Results for Perchloroethene 12

5 Soil-Gas Survey Results for Trichloroethene 13

6 Soil-Gas Survey Results for Carbon Dioxide 14

7 Soil-Gas Survey Results for Methane 15

TABLE

1 Sample Numbers, Locations, and Results for the Soil-Gas Survey in the Solid Waste Landfill 7

INTRODUCTION

Ground-water monitoring at the Hanford Site Solid Waste Landfill (SWL) was initiated in May 1987. Because monitoring results from a nearby downgradient Hanford Site well indicated the presence of chlorinated hydrocarbons, these constituents were added to the SWL monitoring schedule. Several chlorinated hydrocarbons were detected, but only one, trichloroethene (TCE), has consistently been reported near or above the U.S. Environmental Protection Agency's Maximum Contaminant Level of 5 ppb for public drinking water. Reported values for TCE have ranged from a high of 10 ppb to around 5 ppb in three downgradient SWL wells.

Investigations into the source of the contaminants determined that washwater, containing small amounts of solvents, had been discharged to three trenches on the west side of the SWL between January 1985 and January 1987. No records indicating other potential sources have been found, and the ground-water distribution of the contaminants is consistent with this source.

GEOLOGY AND HYDROLOGY

In the vicinity of the SWL, surficial dune sand (Holocene) overlies Hanford formation (flood-deposited) silts, sands, and gravels, and Ringold Formation (fluvial- and lacustrine-deposited) silts, sands, and gravels. The unconfined aquifer occurs in the sediments of the Ringold and Hanford formations. The water table occurs approximately 125 ft beneath land surface, in a gravelly, sandy subunit of the Hanford formation. The hydraulic gradient under the SWL is extremely flat, on the order of 0.0001. The general ground-water flow direction is from west to east, essentially perpendicular to the long axis of the landfill (Figure 1). Transmissivities range from 125,000 to 250,000 ft^2/d, and conductivities range from 2100 to 4200 ft/d. Estimates of ground-water flow range from 2 to 5 ft/d. More background information is available in Fruland et al. (1989) and Weekes et al. (1987).

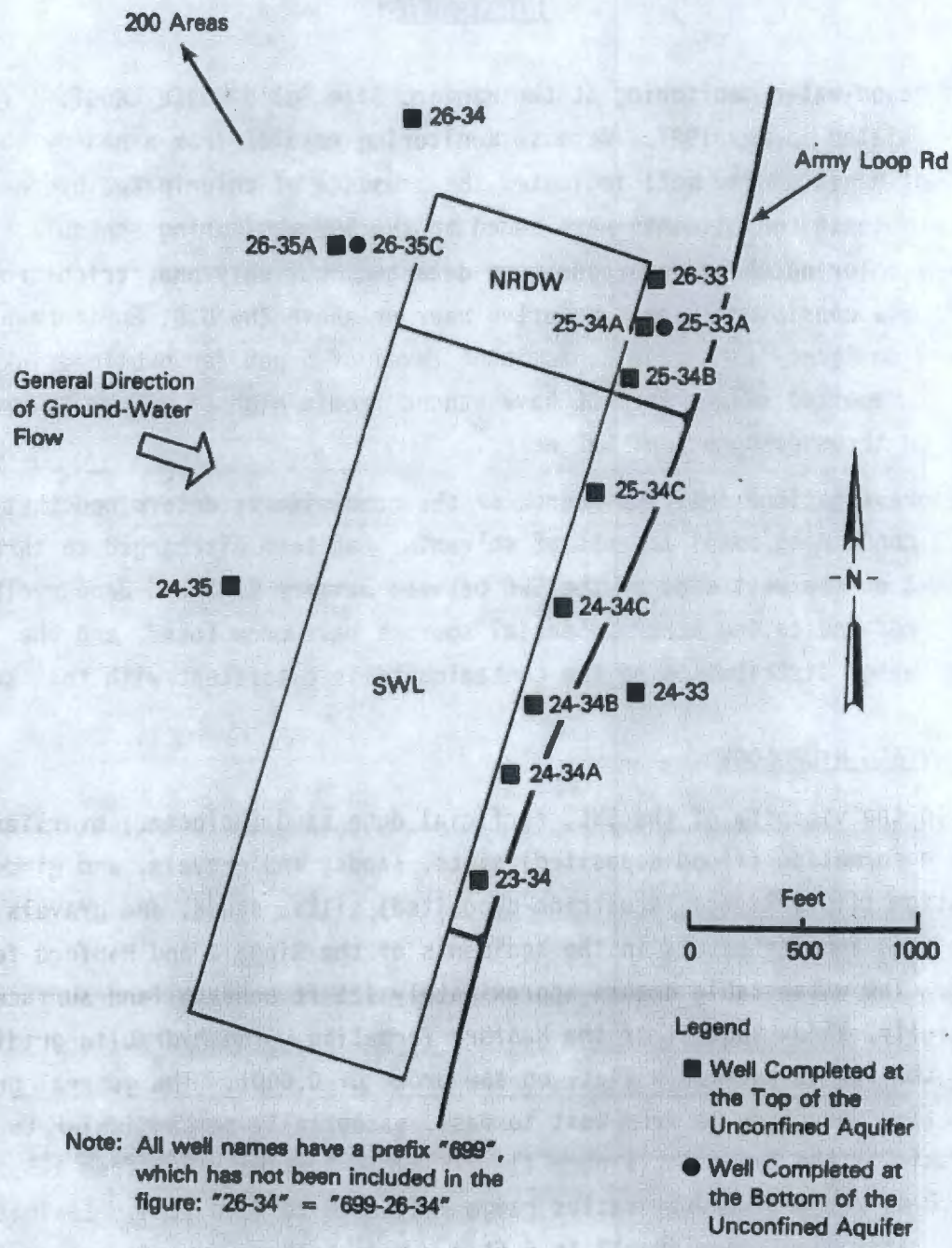

FIGURE 1. Ground-Water Monitoring Network at the Solid Waste Landfill (SWL), Nonradioactive Dangerous Waste (NRDW) Landfill, and Nearby Site Well 699-24-33

SOIL CONDITIONS AT THE SOLID WASTE LANDFILL

Three sedimentary subunits occur above the water table in the vicinity of the SWL: a surficial dune sand, generally only a few feet thick, and a sandy subunit that grades into a gravelly subunit. The surficial dune sand has been largely reworked within the landfill boundary as a result of facility operations. Beneath the dune sand is a narrow horizontal silt layer, only a few inches thick, that marks the top of the sand subunit. The sand subunit consists of nearly horizontal layers of basaltic sands with some narrow silty layers, lenses of gravel, and clastic dikes. Clastic dikes, consisting of sands and silts, which are typically observed in trench excavations, parallel and cross-cut the horizontal sands and silts. Clastic dikes have not been extensively studied; neither their aerial and vertical extent nor their influence on liquid and volatile transport in the subsurface are known.

In contrast to the relatively undisturbed soil conditions described above, discharge of solid and liquid wastes to the SWL has created large "disturbed" areas containing both reworked soil and wastes. Solid waste trenches (either 15 or 20 ft deep) have received mainly office and lunchroom trash. A few special trenches have received specific waste types, such as asbestos and wood wastes. Liquid waste trenches (10 ft deep) have received sewage and washwater. Trenches will have a different soil profile and pore space volume compared with the areas between trenches. Each trench's wastes are covered with the excavated soils and topped with a ballast layer of rock to support the heavy operating equipment. A final compacted layer of soil, approximately 5 ft deep, is added over the ballast layer when a trench is taken out of active service. Figure 2 shows the approximate locations of the liquid and trash trenches.

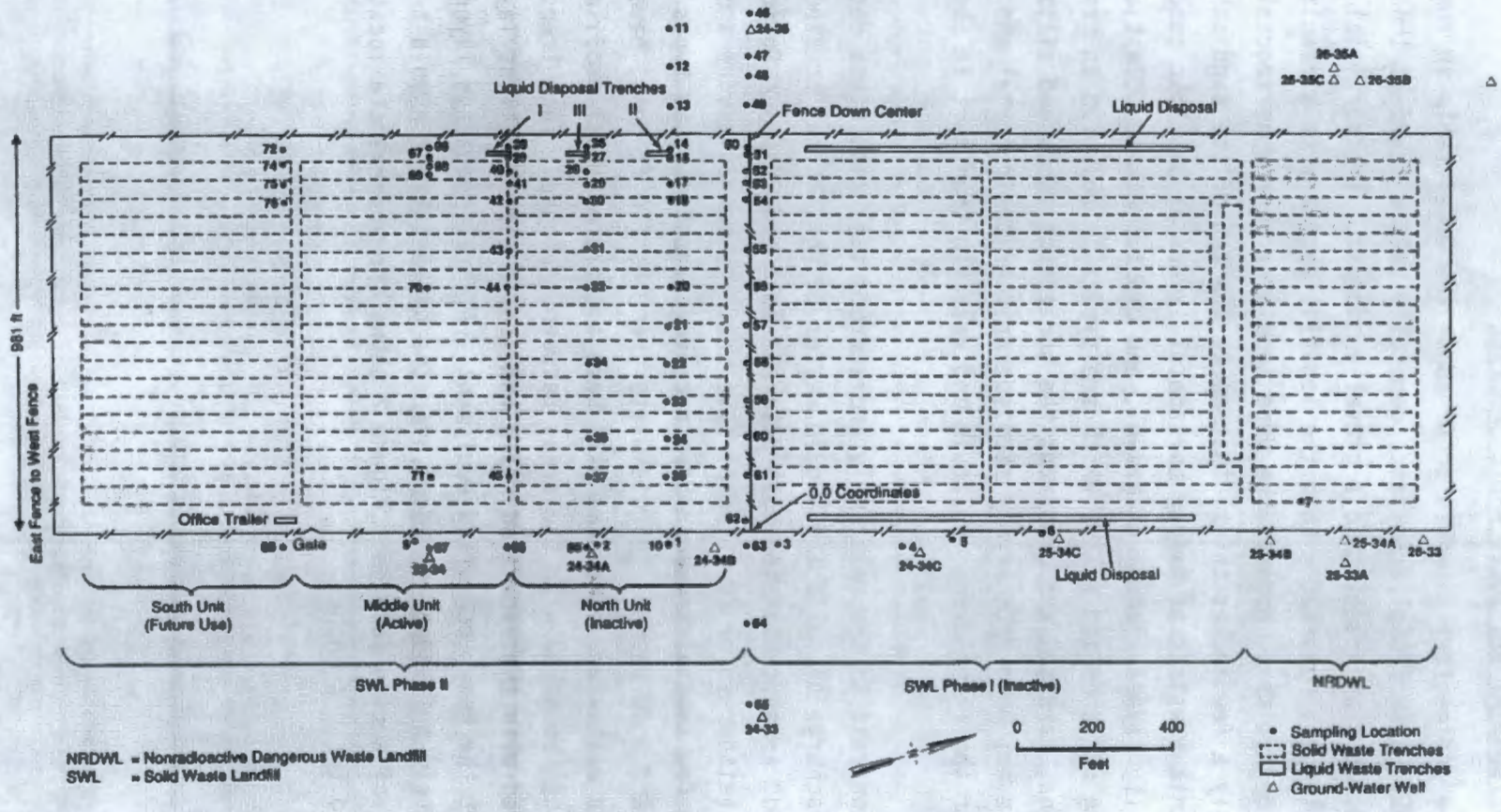

FIGURE 2. Sample Point Locations for the Solid Waste Landfill Soil-Gas Survey

INITIATION OF SOIL-GAS WORK AT THE SOLID WASTE LANDFILL

The efficacy of a soil-gas survey to determine the lateral distribution of contamination in the vadose zone, and possibly ground water, at the SWL was discussed in 1987. Washwater discharge to the SWL ceased in January 1987; an additional driving force, the discharge of sewage from Hanford Site operations to the same three trenches, was discontinued in April 1987. The SWL is situated well within the Hanford Site, and early ground-water monitoring results indicated consistently low concentrations of chlorinated hydrocarbons. Therefore, a soil-gas survey was planned pending collection of sufficient ground-water monitoring data to determine if the ground-water data would reflect the changes in landfill operations. A slight decrease was observed during the first year of monitoring, after which concentration levels have remained relatively constant. A soil-gas survey was planned for FY 1989 to determine the areal extent of chlorinated hydrocarbons at the SWL.

During June 1988, preliminary soil-gas samples were collected and analyzed to determine the feasibility and usefulness of a soil-gas survey. Sampling locations were chosen next to ground-water monitoring wells at the SWL and adjacent Nonradioactive Dangerous Waste Landfill (NRDWL). Ground-water samples were collected simultaneously for analysis to provide points of comparison. These data are included in Appendix A, and provide an indication of the extent of contamination beyond the physical boundary (and point of compliance) of the SWL.

The majority of the soil-gas data reported here were collected during October and November 1988 and January and February 1989.

EXPERIMENTAL

Figure 1 showed the SWL and adjacent NRDWL, including the ground-water monitoring wells. Figure 2 provided the approximate locations of soil-gas collection points and trenches. Points were generally located on 100-ft centers in the east-west direction with smaller spacing closer to the area of the disposal trenches to better define the spatial distribution of contaminants at their presumed source. Five east-west traverses on 200-ft centers

were performed across the Phase II portion of the SWL. The first traverse was extended beyond the bounds of the landfill, ranging from upgradient well 699-24-35A on the east side to well 699-24-33 on the west side.

A detailed description of the soil-gas method, as well as the specific sampling and analysis protocol used in Pacific Northwest Laboratory soil-gas investigations on the Hanford Site, is presented in Appendix B. Experimental techniques now used routinely for other investigations on the site were developed during the conduct of this work. Some evolution of methodology occurred as a result. The probe design and insertion method in particular evolved considerably over the course of the project as more difficult sampling conditions were encountered on traverses across the SWL. Initially, samples were collected at a constant depth of 6 ft using a 3/4-in.-diameter steel sampling probe inserted manually using a slide hammer-type tool. An electric hammer was then substituted to facilitate probe entry; however, that method also was eventually abandoned as a result of repeated equipment breakage and was replaced by a pneumatic hammer. Insertion depth was reduced to 4 ft to minimize penetration problems. Probe diameter also was increased to 1 in. to minimize thread breakage.

Soil-gas survey results are given in Table 1. Sampling locations are indicated by sample numbers. A sample number followed by different letters with the same date indicates a duplicate sample was taken. A sample number followed by different letters <u>and different</u> dates indicates resampling of the same sample location at different times. A hyphenated number indicates additional sampling within 1 ft of the same point. Duplicate samples were part of the quality control for the survey (see Appendix B). Repeated sampling of the same point during the course of the soil-gas survey was accomplished to indicate changes in results that could be related to a number of factors. Over time, a decrease in volatile concentration levels (given there were no more volatile organics placed in the landfill after April 1987) would be expected in an open (to the atmosphere) system. Changes in barometric pressure also would be expected to influence results, as might seasonal temperature changes. These considerations represent some of the limitations of the data.

TABLE 1. Sample Numbers, Locations, and Results for the Soil-Gas Survey in the Solid Waste Landfill. The 4-ft sampling data have been normalized.

Sample Number	Date Collected	Depth	X (ft)	Y (ft)	CH_4 (ppmv)	TCA (µg/L)	TCE (µg/L)	PCE (µg/L)	CCl_4 (µg/L)	DCA (µg/L)	CO_2 (%)
1A	28-JUN-88	4	-200	-34		4.73	0.41	0.14	0.03		
1B	28-JUN-88	4	-200	-34		4.65	0.27	0.09	0.03		
2A	28-JUN-88	4	-375	-34		3.15	0.15	0.32	0.02		
2B	28-JUN-88	4	-375	-34		3.12	0.15	0.32	0.02		
3A	28-JUN-88	4	75	-34		0.23	0.06	0.05	ND		
3B	28-JUN-88	4	75	-34		0.21	0.05	0.05	ND		
4A	29-JUN-88	4	295	-45		0.38	0.06	0.66	0.02		
5A	29-JUN-88	4	445	-34		0.26	0.11	0.41	ND		
6A	29-JUN-88	4	815	6		3.20	1.16	0.56	0.05		
7A	29-JUN-88	4	1475	71		0.09	0.06	0.18	0.09		
9A	30-JUN-88	4	-850	-11		1.55	0.54	0.02	0.02		
10A	27-OCT-88	6	-200	-38		1.01	0.03	0.02	ND		
10B	31-OCT-88	6	-200	-38		0.50	0.04	0.03	ND		
10C	03-NOV-88	6,	-200	-38	ND	0.51	0.02	0.01	ND	ND	
10D	03-NOV-88	6	-200	-38	ND	0.50	0.02	0.01	ND	ND	
10E	09-NOV-88	6	-200	-38	1.2	0.52	0.05	0.01	ND	ND	0.11
10F	14-NOV-88	6	-200	-38		0.47	0.03	ND	ND	ND	0.04
10G	22-NOV-88	6	-200	-38		0.53	0.03	0.01	ND	ND	0.01
10-2A	22-NOV-88	4	-200	-38.5		0.52	0.02	ND	ND	ND	0.01
10-2B	05-JAN-89	4	-200	-38.5	1.8	0.83	ND	ND	ND	ND	0.05
10-3A	22-NOV-88	6	-199.5	-38.5		0.47	0.03	ND	ND	ND	
11A	27-OCT-88	6	-200	1325		1.08	0.03	0.01	ND		
12A	27-OCT-88	6	-200	1225		1.34	0.04	0.03	ND		
13A	27-OCT-88	6	-200	1125		0.68	0.04	0.03	ND		
13B	14-NOV-88	6	-200	1125		0.27	0.03	0.02	ND	ND	0.15
13C	23-NOV-88	6	-200	1125	1.4	0.36	0.04	0.03	ND	ND	0.15
14A	27-OCT-88	6	-200	1015		4.74	1.61	0.60	ND		
14B	14-NOV-88	6	-200	1015		3.70	1.30	0.50	ND	ND	0.61
14C	23-NOV-88	6	-200	1015	3.6	5.50	1.80	0.72	ND	0.50	0.83
15A	27-OCT-88	6	-200	995		4.68	0.93	0.44	ND		
15B	14-NOV-88	6	-200	995		4.20	0.87	0.39	ND	ND	1.00
15C	23-NOV-88	6	-200	995	5.3	4.70	1.10	0.45	ND	ND	1.05
15-2A	23-NOV-88	4	-200	994.5	7.1	4.40	0.95	0.39	ND	ND	0.80
15-3A	23-NOV-88	6	-200	994	4.9	4.00	0.87	0.37	ND	ND	
17A	31-OCT-88	6	-200	925		1.96	0.23	0.56	ND		
18A	31-OCT-88	6	-200	875		0.72	0.11	0.71	ND		
20A	31-OCT-88	6	-200	645		1.14	0.40	0.08	ND		
21A	31-OCT-88	6	-200	545		13.00	0.48	3.40	ND		
22A	01-NOV-88	6	-200	445		17.86	3.82	5.81	ND		
23A	01-NOV-88	6	-200	345		5.88	1.41	0.78	ND		
24A	01-NOV-88	6	-200	245		42.80	1.50	7.65	ND		
25A	01-NOV-88	6	-200	145		42.00	1.90	5.21	ND		
26A	03-NOV-88	6	-400	1015	4.8	6.71	1.39	0.02	ND		
27A	03-NOV-88	6	-400	995	5.3	12.54	2.96	1.48	ND		
28A	03-NOV-88	6	-400	945	11	29.80	12.97	1.70	ND		
29A	03-NOV-88	6	-400	925	14	20.56	5.47	1.11	ND		

TABLE 1. (contd)

Sample Number	Date Collected	Depth	X (ft)	Y (ft)	CH_4 (ppmv)	TCA (µg/L)	TCE (µg/L)	PCE (µg/L)	CCl_4 (µg/L)	DCA (µg/L)	CO_2 (%)
30A	03-NOV-88	6	-400	875	17	20.02	5.94	1.63	ND		
31A	03-NOV-88	6	-400	745	83	34.95	1.30	9.29	ND		
32A	03-NOV-88	6	-400	645	1.7	1.29	0.31	0.12	ND		
34A	03-NOV-88	6	-400	445	1	21.96	1.71	6.31	ND		
36A	03-NOV-88	6	-400	245	15	39.00	1.10	6.50	ND	ND	
37A	03-NOV-88	6	-400	145	15	40.66	7.95	7.00	ND	7.40	
38A	09-NOV-88	6	-600	1015	4.3	8.30	4.10	2.60	ND	0.50	1.80
39A	23-NOV-88	6	-600	995	8.6	1.00	5.30	3.00	ND	ND	2.85
40A	23-NOV-88	6	-600	954	10	11.00	5.80	3.20	ND	ND	2.80
41B	30-NOV-88	6	-600	925	15	18.00	2.60	0.70	ND	1.00	4.80
42A	30-NOV-88	6	-600	875	8.4	21.00	0.86	1.50	ND	ND	3.50
43A	05-JAN-89	4	-600	745	24	73.50	4.05	16.50	ND	2.50	6.00
44A	12-JAN-89	4	-600	645	4.2	3.15	0.10	0.17	ND	ND	2.40
45A	12-JAN-89	4	-600	145	2.7	2.25	0.20	0.07	ND	ND	0.25
46A	12-JAN-89	4	0	1360	1.9	0.29	ND	ND	ND	ND	0.06
47A	12-JAN-89	4	0	1250	2.4	0.30	ND	ND	ND	ND	0.06
48A	12-JAN-89	4	0	1200	1.6	0.22	ND	ND	ND	ND	0.06
49A	12-JAN-89	4	0	1125	1.8	0.12	ND	ND	ND	ND	0.06
50A	13-JAN-89	4	0	1015	1.8	0.12	0.05	ND	ND	ND	0.09
51A	13-JAN-89	4	0	995	2	0.25	0.12	ND	ND	ND	0.19
52A	13-JAN-89	4	0	954	3.3	0.53	0.30	0.02	ND	ND	0.34
53A	13-JAN-89	4	0	925	3	0.21	0.07	0.02	ND	ND	0.32
54A	13-JAN-89	4	0	875	2.1	0.14	0.06	0.03	ND	ND	0.30
55A	16-JAN-89	4	0	745	2.1	0.09	0.05	0.03	ND	ND	0.21
56A	16-JAN-89	4	0	645	1.7	0.06	0.05	0.02	ND	ND	0.20
57A	16-JAN-89	4	0	545	1.8	0.38	0.03	0.15	ND	ND	0.30
58A	16-JAN-89	4	0	445	1.8	0.33	ND	0.07	ND	ND	0.18
59A	16-JAN-89	4	0	345	1.7	0.27	0.09	0.48	ND	ND	0.39
60B	18-JAN-89	4	0	245	1.8	0.96	0.08	0.51	ND	ND	0.38
61A	18-JAN-89	4	0	145	4.2	1.11	0.15	0.45	ND	ND	0.41
62A	18-JAN-89	4	0	27	3.2	0.71	0.15	0.08	ND	ND	
63A	18-JAN-89	4	0	-38	2.3	0.21	ND	ND	ND	ND	0.06
64A	18-JAN-89	4	0	-238	1.2	0.65	0.06	ND	ND	ND	0.06
65A	18-JAN-89	4	0	-438	1.3	0.38	ND	ND	ND	ND	0.06
66A	19-JAN-89	4	-800	1015	4.8	2.85	0.51	0.71	ND	ND	0.65
67A	19-JAN-89	4	-800	995	6.2	9.75	1.37	2.60	ND	ND	1.60
68A	19-JAN-89	4	-800	975	8.3	72.00	2.70	3.00	ND	2.25	3.00
69A	19-JAN-89	4	-800	955	7.5	21.00	1.80	6.00	ND	ND	1.50
70A	19-JAN-89	4	-800	645	3.7	48.00	0.92	0.81	ND	ND	3.20
71A	27-JAN-89	4	-800	145	3.3	2.40	0.12	0.03	ND	ND	3.10
72A	27-JAN-89	4	-1170	1015	3.8	5.40	0.63	1.14	ND	ND	0.50
74A	27-JAN-89	4	-1170	975	10.9	34.50	3.00	5.85	ND	2.40	6.00
75A	27-JAN-89	4	-1170	925	5.5	46.50	2.10	6.75	ND	ND	2.50
76A	13-FEB-89	4	-1170	875	3.2	0.51	ND	0.02	ND	ND	0.03
85A	13-FEB-89	4	-400	-38	2.2	1.13	0.18	ND	ND	ND	0.06
86A	13-FEB-89	4	-600	-38	2.5	0.50	0.11	ND	ND	ND	0.06
87A	13-FEB-89	4	-800	-38	2.4	1.50	0.48	ND	ND	ND	0.06
88A	13-FEB-89	4	-1170	-38	3.1	2.55	0.99	0.02			

Sampling depths were either 4 or 6 ft. If 4 ft was the sampled depth, analytical results were normalized to the equivalent 6-ft depth by multiplying by 1.5. The basic assumptions are that the land's surface boundary represents an open system and that the gas gradient is linear between the source and the ground water. Intercomparison studies carried out at two locations indicated that this procedure provides an equivalent soil-gas gradient.

Sampling locations are given in x-y coordinates; 0,0 is the eastern side of the SWL at the boundary point between the Phase I and Phase II sections. A 200-ft measuring tape was used to measure sampling points from posts in the perimeter fence. The x and y coordinates are slope distances, as opposed to actual horizontal distances. Location of sampling points may be inaccurate by an estimated 10% to 20% because a formal geodetic survey was not performed. However, sufficient soil-gas data have been collected to discern the general areal distribution of contaminants in the vadose zone.

A complete listing of the depth-normalized soil-gas data is presented in Table 1. Chlorinated hydrocarbon results are given in micrograms per liter (μg/L). The following chlorinated species are reported: 1,1,1-trichloroethane (TCA), 1,1,2-trichloroethene (TCE), 1,1,2,2-tetrachloroethene [also known as perchloroethene (PCE)], carbon tetrachloride (CCl_4), and 1,1-dichloroethane (DCA). Methane (CH_4) results are presented in parts per million by volume (ppmv), while carbon dioxide (CO_2) results are given as volume %. Carbon dioxide results were not corrected for differences in sampling depth because of the presence of atmospheric background at 0.06% and problems with the dynamic range of the available colorimetric tubes (upper range, 6 volume %). "ND" indicates not detected. The method detection limit depends on the species and is as follows: 0.5 ppmv for CH_4, 0.01 μg/L for TCA, 0.01 μg/L for TCE, 0.002 μg/L for PCE, 0.022 μg/L for CCl_4, 0.5 μg/L for DCA, and 0.01% for CO_2.

DISCUSSION OF RESULTS

Soil-gas analysis at the SWL resulted in detection of five chlorinated hydrocarbon compounds: TCA, TCE, PCE, CCl_4, and DCA. These are the same series of compounds found in the downgradient ground-water wells. As is the case in the ground water, TCA tends to be dominant in most cases. The spatial distributions of TCA, TCE, and PCE are relatively well behaved, but the results are somewhat surprising. Contour plots for TCA, PCE, TCE, CO_2, and CH_4 are shown in Figures 3 to 7, respectively. The data were plotted by the UNIRAS• graphics package mounted on a minicomputer. It should be noted that the data grid was not dense enough to completely eliminate the generation of all computational artifacts. Carbon tetrachloride was not detected in any of the samples within the SWL, but was found in minor amounts in samples taken outside the SWL. Dichloroethane was detected at several sampling points inside the boundary of the SWL and, in a few cases, at relatively high levels (7.4 μg/L). The distribution of DCA appears to be erratic and does not form a consistent spatial pattern. The reason for that behavior is not evident. Dichloroethane may be present as a partial degradation product of TCA (Vogel et al. 1987). Its apparently erratic distribution may thus be related at least in part to variations in subsurface bacterial processes.

Trichloroethane Distribution

Elevated levels of TCA were not observed over the known liquid disposal trenches, but were found in the general vicinity of those trenches and can be assumed to be related to liquid disposal in the trenches (see Figure 3). The largest accumulation of TCA was found approximately 200 ft east of trench I, the first trench to receive liquid waste (see Figure 2). There appears to be a plume spreading southeast from that point. An additional large concentration of TCA is seen at the east edge of Phase II near wells 699-24-34A and 699-24-35B (see Figure 3). The origin of this second accumulation is not understood, but it does appear to be a persistent feature in all of the plots. A third accumulation 200 ft south of trench I is also clearly discernible on Figure 3.

• UNIRAS, Inc. Version 6.1b, Dallas, Texas 75240

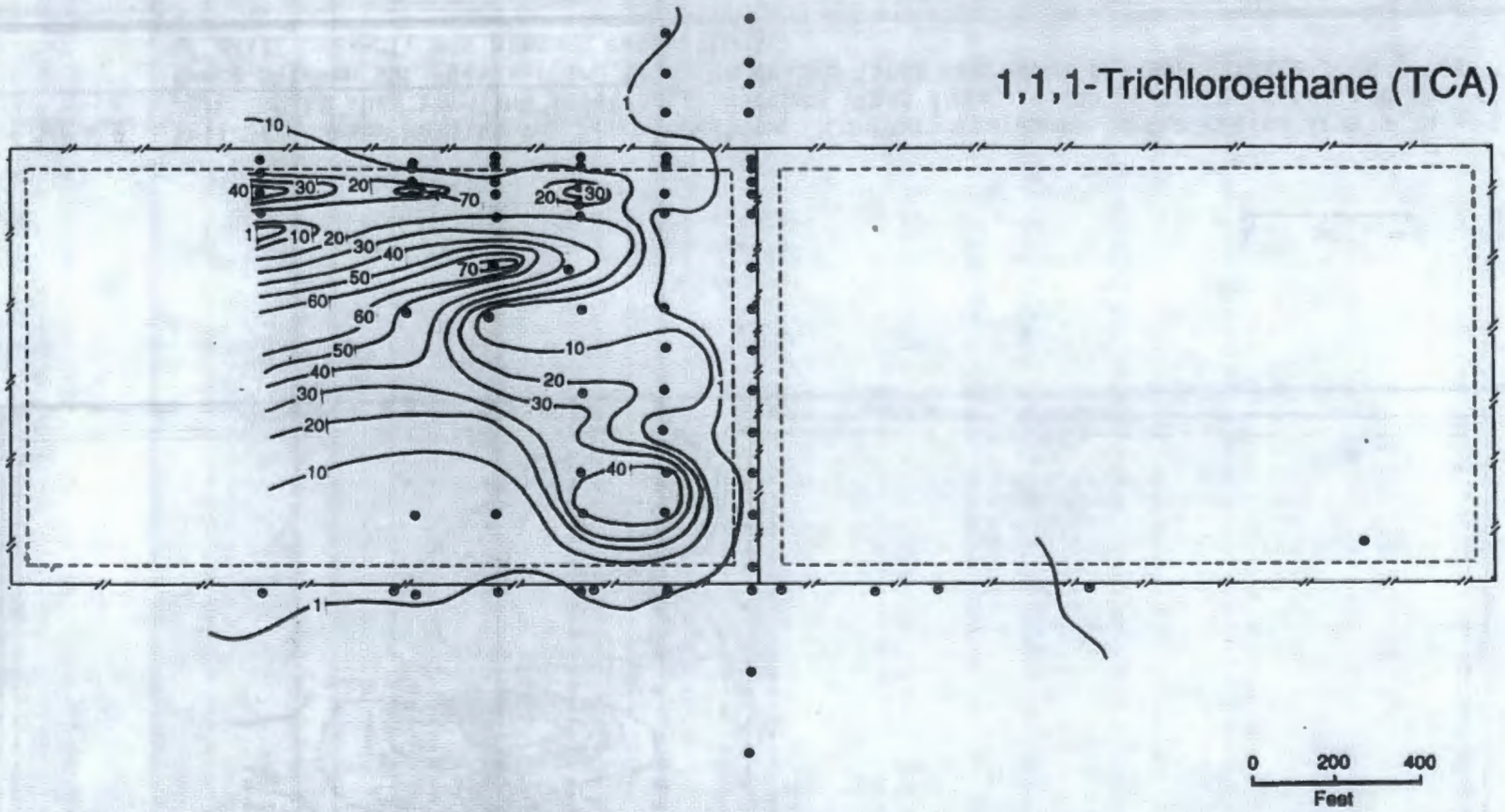

FIGURE 3. Soil-Gas Survey Results for Trichloroethane. Contours represent concentration levels in µg/L. Dots show sampling locations. Hatched lines indicate the perimeter fence and the fence between SWL Phases I and II. The dashed lines represent the approximate boundaries of past, present, and planned excavations.

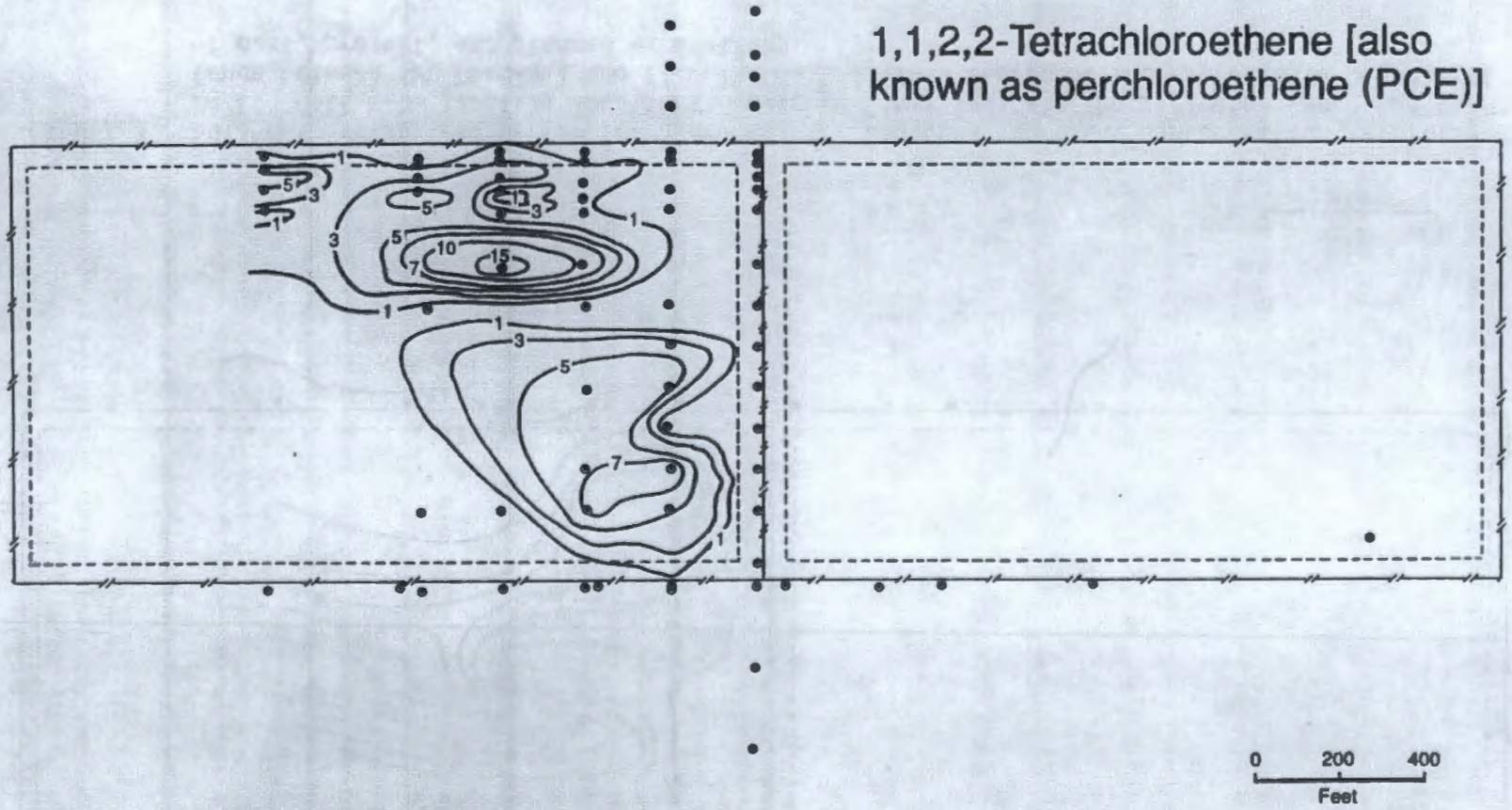

FIGURE 4. Soil-Gas Survey Results for Perchlorethene. Contours represent concentration levels in µg/L. Dots show sampling locations. Hatched lines indicate the perimeter fence and the fence between SWL Phases I and II. The dashed lines represent the approximate boundaries of past, present, and planned excavations.

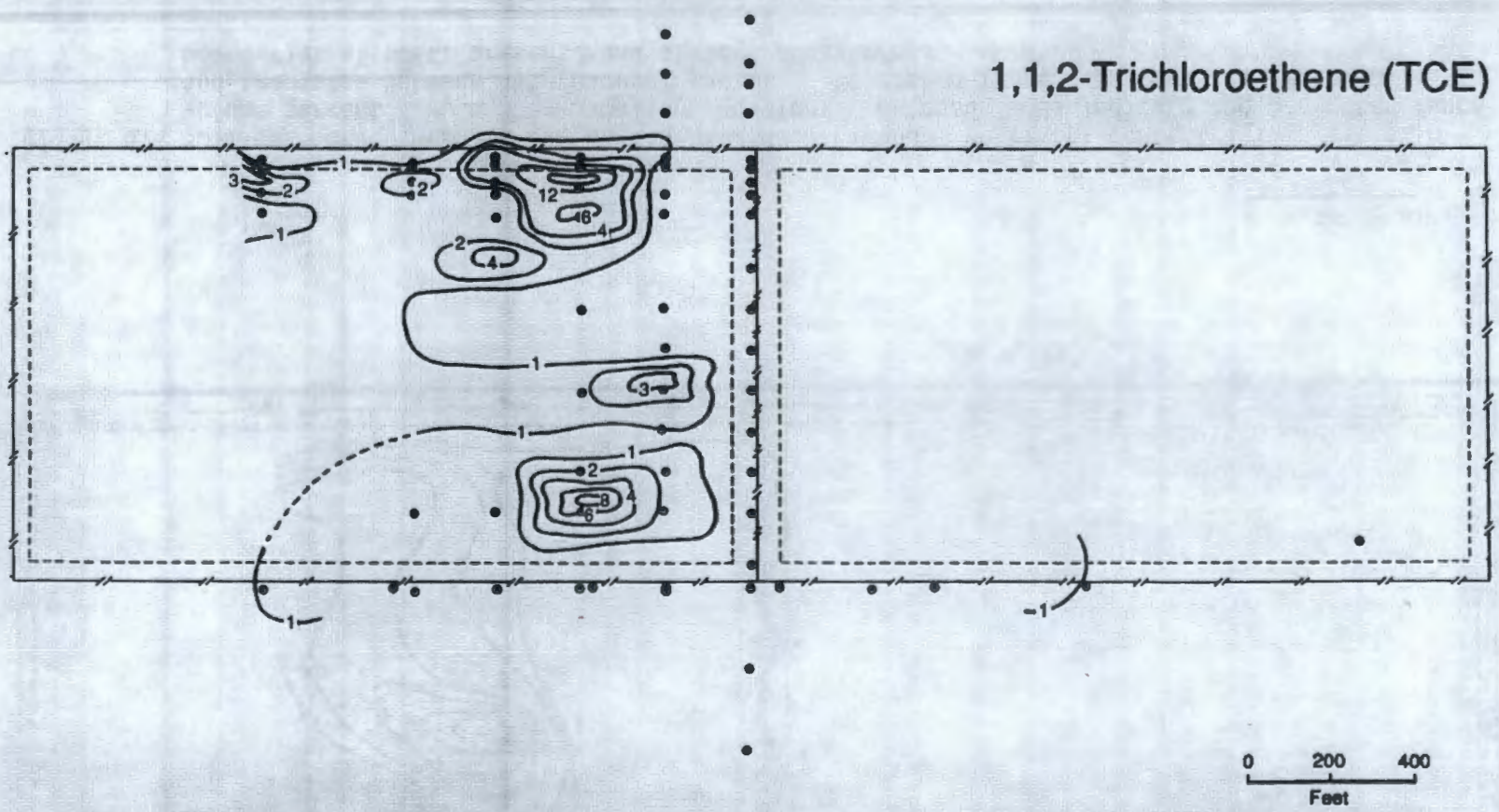

FIGURE 5. Soil-Gas Survey Results for Trichloroethene. Contours represent concentration levels in µg/L. Dots show sampling locations. Hatched lines indicate the perimeter fence and the fence between SWL Phases I and II. The dashed lines represent the approximate boundaries of past, present, and planned excavations.

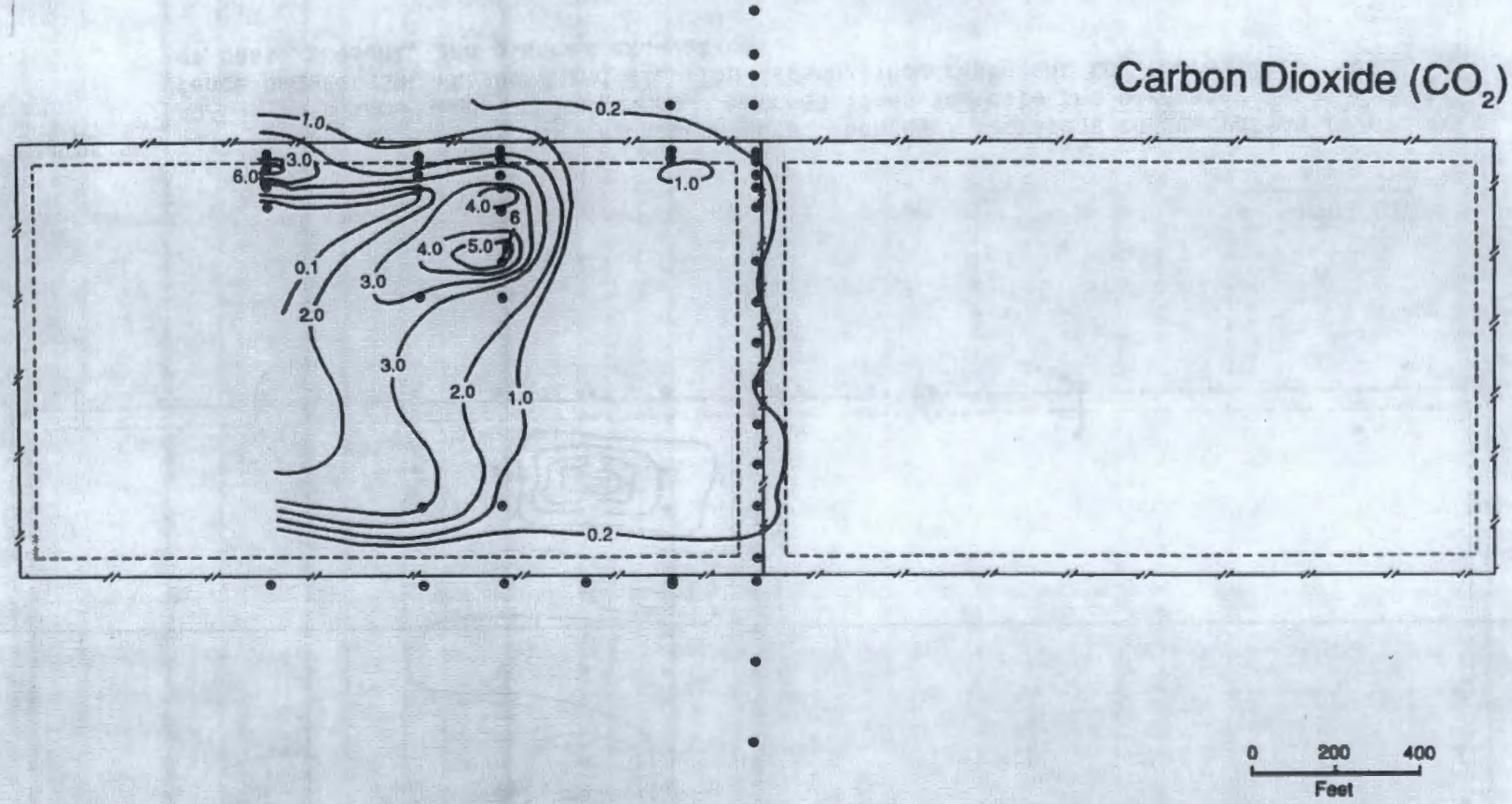

FIGURE 6. Soil-Gas Survey Results for Carbon Dioxide. Contours represent concentration levels in volume percent. Dots show sampling locations. Hatched lines indicate the perimeter fence and the fence between SWL Phases I and II. The dashed lines represent the approximate boundaries of past, present, and planned excavations.

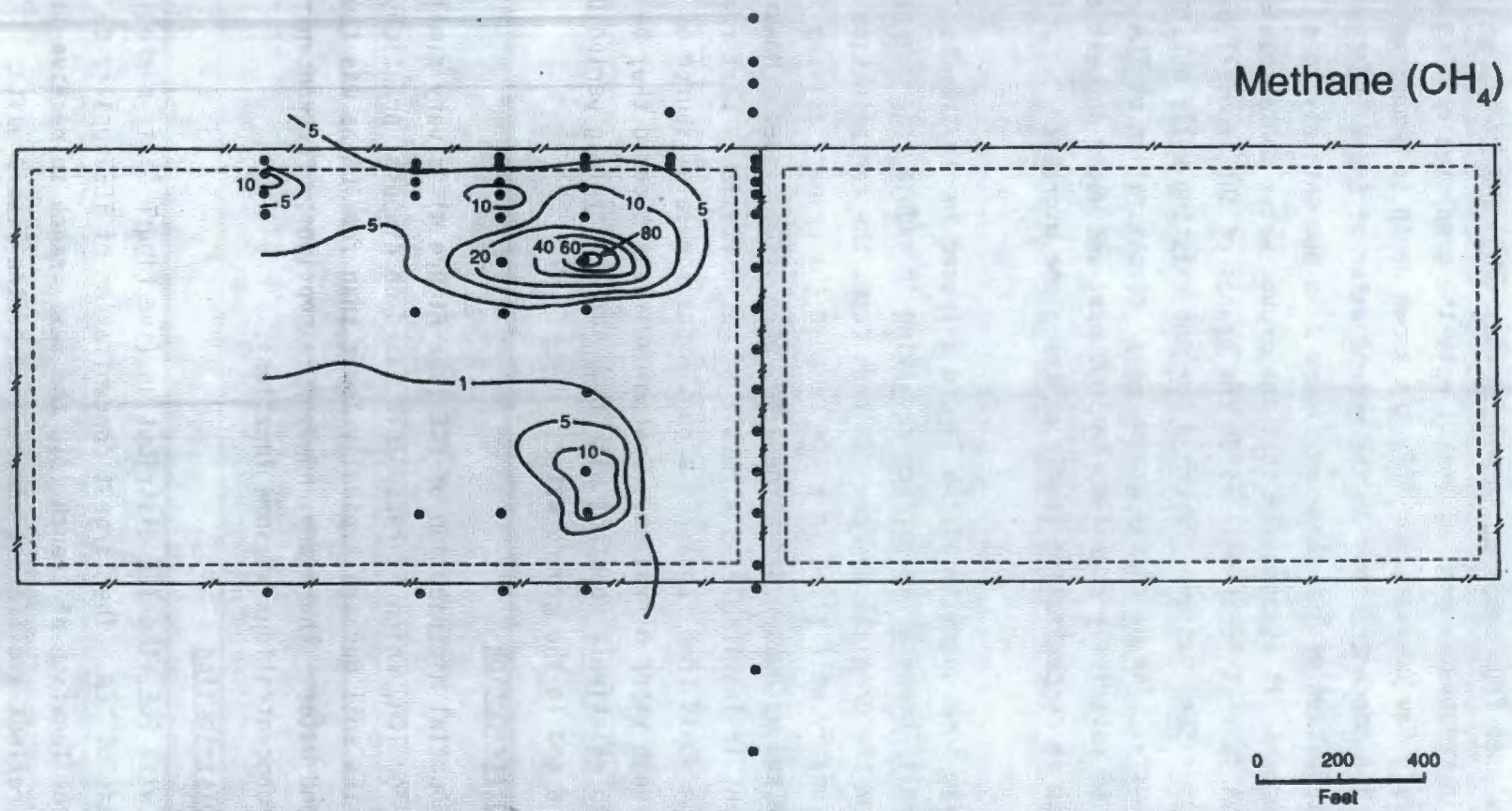

FIGURE 7. Soil-Gas Survey Results for Methane. Contours represent concentration levels in volume percent. Dots show sampling locations. Hatched lines indicate the perimeter fence and the fence between SWL Phases I and II. The dashed lines represent the approximate boundaries of past, present, and planned excavations.

Soil-gas analyses from sampling locations near wells 699-24-34A and 699-24-35B were in reasonably good agreement with the predicted results based on the known Henry's Law constant for TCA, the known depth to ground water, and the measured TCA concentrations in the ground water at those locations. If the areal distribution of TCA shown on Figure 3 is due entirely to a ground-water component, it is possible that the ground-water concentrations of contaminants at several locations inside the bounds of the landfill may be significantly higher than has been reported for the existing wells outside the landfill boundary. The predicted ground-water concentration of TCA on this basis would be relatively high (500 to 1000 ppb) and would suggest a potential increase in concentration levels as the plume migrates downgradient.

Alternatively, some quantity of the liquid disposed in the trenches may have spread laterally beneath the surface resulting in vadose zone components some distance from the original source. In that case, the contamination is likely to be reasonably well fixed in place because the primary driving force (i.e., the sewage and washwater discharges) has been discontinued. However, continuous movement is inevitable as a result of gas diffusion. What remains in the vadose zone would then represent a continuous low-level source of contamination through vapor diffusion. Contaminant levels could thus be expected to remain relatively constant with time for a very long period both in the vadose zone and in the ground water.

Perchloroethene Distribution

The general spatial distribution of PCE (see Figure 4) is very similar to that observed for TCA, which is reasonable based on disposal practices. Levels of PCE in the soil gas are typically lower than for TCA as was the case for the ground water. There are, however, exceptions: PCE concentrations exceed TCA concentrations at some locations.

Trichloroethene Distribution

By contrast with PCE, the TCE distribution (see Figure 5) is markedly different from that of TCA. The largest concentration of TCE appears to be coincident with the location of trench III, the last trench to receive liquid waste. This may reflect a different composition of the liquid wastes

discharged to the third trench. The accumulation 200 ft south of trench I, which is clearly visible on the TCA and PCE plots, is largely absent on Figure 5, although a small amount of TCE is present. There also is an accumulation of TCE at the east side of the site in approximately the same location as the corresponding TCA accumulation. The TCE feature appears to be more concentrated in extent, however.

Carbon Dioxide Distribution

Carbon dioxide measurements were initiated part way through the survey, and thus form a smaller data set than is available for the chlorinated hydrocarbons; nevertheless, some interesting features emerge. There is a reasonably good correspondence between the accumulations of TCA and CO_2 (see Figure 6). The maximum CO_2 level is in excess of 6%, which is the upper calibration range of the colorimetric indicator tubes. The soil-gas CO_2 is thus up to 100 times higher than the atmospheric background even at only the 4-ft depth. These concentrations are typical for landfills and are generally the result of oxidation of sewage sludge by either bacterial or chemical processes (Parametrix, Inc. 1987). Carbon dioxide thus serves as an independent tracer of opportunity for the waste water serving to confirm the idea that the sewage water served as a driving force to mobilize the smaller quantities of solvent-contaminated waste water. The very high levels of CO_2 found suggest that the source material may be relatively close to the surface because a linear gradient extrapolated near the ground water would result in a CO_2 concentration greater than 100%.

Methane Distribution

Methane measurements also were initiated part way through the survey. Methane (see Figure 7) follows roughly the same distribution as the CO_2, and is typically a product of bacterial degradation of organic material (sewage sludge). Methane levels reach a maximum of only 72 ppmv east of trench I. This observation is consistent with expectation that bacterial oxidation is favored over reduction especially in a well-oxygenated medium such as expected at the SWL. These data also provide good evidence that the SWL does not contain subsurface CH_4 levels sufficient to support combustion.

Carbon Tetrachloride Distribution

A special high-sensitivity analytical technique employed for the ground-water analyses reported here at the SWL and NRDWL showed that low levels of CCl_4 are a persistent feature of all ground-water samples taken in that area. A complete listing of these analyses is presented in Appendix A (Table A.7). Carbon tetrachloride levels range from 0.3 to 0.8 ppb, well below the regulatory limit of 5 ppb. There is no obvious difference between upgradient and downgradient wells. Because CCl_4 contamination is extensive beneath much of the 200-West Area, it is possible that there is an area-wide background of CCl_4 extending from the 200-West Area. However, this does not appear to be the case because measurements taken a short distance from the 200-West Area boundary show a rapid dropoff of CCl_4 concentration levels. Well 699-24-46 is located upgradient near the SWL, between the SWL and the 200-West Area. The measured CCl_4 content in that well was less than 0.01 ppb, a factor of 30 to 80 less than at the SWL and NRDWL. Also, CCl_4 was below detection in well 699-14-38, located a short distance south (downgradient) of the SWL. It thus appears that the source of CCl_4 is local to the landfills. Soil-gas measurements taken in the Phase II portion of the SWL did not show any detectable CCl_4. Minor amounts of CCl_4 were found in soil-gas samples taken on the east side of the NRDWL, but those observations were not pursued further at that time. These data suggest that: 1) the CCl_4 found at low levels in the ground water at the SWL and NRDWL wells is not associated with the waste-water disposal that appears to have caused contamination of several other chlorinated hydrocarbons (i.e., TCA, TCE, and PCE) and 2) if an independent source of CCl_4 is present, it is likely to be located in either Phase I of the SWL or the NRDWL. It is not possible to be more definitive without further field study.

CONCLUSIONS

1. Factors affecting the results reported for this soil-gas survey include the duration of the survey, the different (4- and 6-ft) depths used for sample collection, atmospheric changes such as barometric pressure, variable soil-moisture contents, and disturbed versus undisturbed soils. Although these are factors that would influence the results, the soil-gas sampling method employed at the SWL appears to have been effective for determining the approximate location of subsurface accumulations of chlorinated hydrocarbon solvent contamination.

2. The method is limited in its ability to distinguish vadose zone and ground-water contamination. Conclusions regarding vertical distribution of contaminants must be regarded as tentative.

3. Chlorinated hydrocarbon contaminants detected by the soil-gas method are the same species as those found in the ground-water wells monitoring the SWL. No other species were detected.

4. Within the surveyed area, contaminants are localized in three areas. The most prominent feature was located approximately 200 ft east of trench I. There also was evidence of contamination 200 ft south of trench I, and a separate accumulation was found near the east side of Phase II.

5. The distribution of TCE was markedly different from that of TCA and PCE and probably represents either separate disposal events with washwater of different compositions or different transport rates/mechanisms based on the differences in physical chemistry properties of TCE compared to TCA and PCE.

6. The CO_2 and CH_4 contours were similar to those found for chlorinated hydrocarbons. That fact can be taken as evidence that the chlorinated hydrocarbon contamination is associated with the liquid disposal containing sewage water.

7. The accumulation of chlorinated hydrocarbons near the liquid disposal trenches on the west side of Phase II are most likely near-surface contamination with limited migration potential. The accumulation on the east side of Phase II may represent either near-surface or ground-water contamination. The soil-gas data are not definitive, and long-term ground-water monitoring will help resolve that point. It would be valuable also to install permanent soil-gas monitoring stations at the three maximum plume areas identified by this study.

8. The vertical distribution of the contaminants could be resolved with either vadose zone monitoring probes or installation of additional ground-water monitoring wells. The soil-gas data provide guidance as to the most informative locations.

9. Low-level CCl_4 contamination found in all upper confined aquifer wells near the SWL and NRDWL does not appear to originate in the Phase II portion of the SWL and, thus, was not associated with the liquid waste disposal in that area. Ground-water data, as well as a very limited amount of soil-gas information, suggest that the source of the material may be either the SWL Phase I or the NRDWL area. A more extensive soil-gas survey covering that area would be needed to better resolve that question.

REFERENCES

Fruland, R. M., R. A. Hagen, C. S. Cline, D. J. Bates, J. C. Evans, and R. L. Aaberg. 1989. *Interim Site Characterization Report and Ground Water Monitoring Program for the Hanford Site Solid Waste Landfill.* PNL-6823, Pacific Northwest Laboratory, Richland, Washington.

Parametrix, Inc. 1987. *Solid Waste Landfill Design Manual.* Washington State Department of Ecology, Olympia, Washington.

Vogel, T. M., C. S. Criddle, and P. L. McCarthy. 1987. "Transformations of the Halogenated Aliphatic Compounds." *Environ. Sci. Technol.* 21(8).

Weekes, D. C., S. P. Luttrell, and M. R. Fuchs. 1987. *Interim Hydrogeologic Characterization Report and Ground-Water Monitoring System for the Non-Radioactive Dangerous Waste Landfill, Hanford Site, Washington.* WHC-EP-0021, Westinghouse Hanford Company, Richland, Washington.

APPENDIX A

CHLORINATED HYDROCARBON MEASUREMENTS AT THE SOLID WASTE LANDFILL GROUND-WATER WELLS

APPENDIX A

CHLORINATED HYDROCARBON MEASUREMENTS AT THE SOLID WASTE LANDFILL GROUND-WATER WELLS

INTRODUCTION

Well 699-24-33 is located approximately 500 ft from the east fenceline of the Solid Waste Landfill (SWL). That well was sampled for volatile organics in January 1986 as part of the 90-well Hazardous Materials Monitoring Project. 1,1,1-trichloroethane (TCA) was found in all three samples analyzed (27, 22, and 30 μg/L, respectively). Funding limitations on the project at that time prevented further follow-up of that observation. In FY 1987, the Hazardous Materials Monitoring Project was combined with the Site-Wide Ground-Water Monitoring Project and given a greatly expanded scope. Resampling of well 699-24-33 in March 1987 confirmed the presence of contamination in that area. The Central Landfill was considered as the most likely source. A request was made at that time to sample the Nonradioactive Dangerous Waste Landfill (NRDWL) and the newly completed SWL wells for chlorinated hydrocarbons. Those samples taken in May and June 1987 clearly showed the presence of chlorinated hydrocarbons downgradient of a liquid waste disposal trench in the SWL. Species detected included TCA, 1,1,2-trichloroethene (TCE), perchloroethene (PCE), and 1,1-dichloroethane (DCA). Proportions of the individual species were similar to those found in the site-wide well (699-24-33). Continued monitoring of those wells on 11 separate samplings has clearly confirmed those results. Nine routine sets of samples have been collected to date by the Radiation Protection Technologist (RPT) Group. Those samples were analyzed at United States Testing Company, Inc. (UST). Four of those sample sets included splits made at the well and sent to Pacific Northwest Laboratory (PNL) for quality assurance/quality control (QA/QC) purposes. The PNL method employs electron capture gas chromatography, which is at least 100 times more sensitive than the gas chromatography/mass spectrometry (GC/MS) method used by UST. In addition to

the routine sampling, a special study was undertaken by PNL in June and July 1988 to establish conclusively the existence of the contaminant plume and to verify that the sampling methods used by the RPTs are representative. Details of that study are discussed below.

Well 699-24-33

Well 699-24-33 has been sampled 11 times since early 1986. A summary of the results is given in Table A.1. Only TCA was reported by UST in 1986, since it was not their policy at that time to report results below the contractual detection limit of 10 μg/L. Subsequent analyses are reported relative to the quantifiable detection limit for the instrument, which is estimated to be 2 μg/L for the GC/MS method. The contamination levels have been remarkably constant over a period of 2-½ years.

Well 699-24-34B

The highest chlorinated hydrocarbon levels have been found in well 699-24-34B. A summary of the measurements conducted to date on that well are included in Table A.2. Only the three most abundant species, TCA, PCE, and TCE, are reported here. Chloroform, DCA, and carbon tetrachloride also have been detected in that and several other wells. Only TCE is present at levels of potential regulatory concern. The Drinking Water Standard/Maximum Contaminant Level for TCE is 5 μg/L. Three other wells at the SWL also were found to have similarly elevated levels of TCE. Well 699-24-34B has been included in the PNL QA/QC program for 1988. Several split measurements by both GC/MS (UST) and GC (PNL) are reported in the table. Agreement is excellent in all cases, although the PNL measurements, in general, have better precision because of the much greater sensitivity of the GC method. The UST measurements below 10 μg/L are only reported to one significant figure because of proximity to the detection limit. In 1989, UST added a new analytical method: EPA Method 8010, which employs a Hall electrolytic conductivity detector (HECD) for more sensitive detection of chlorinated species than can be provided by mass spectrometric analysis (GC/MS). The HECD method is intermediate in sensitivity between the PNL and earlier UST method. The first set of results was similar to previous measurements, except for TCE, that is now somewhat lower.

TABLE A.1. Chlorinated Hydrocarbon Contaminants in Well 699-24-33 (μg/L)

Date	1,1,1-TCA		PCE		TCE	
	UST(a)	PNL(b)	UST(a)	PNL(b)	UST(a)	PNL(b)
1/23/86	21	NA(c)	<10	NA	<10	NA
1/23/86	23	NA	<10	NA	<10	NA
1/23/86	30	NA	<10	NA	<10	NA
3/23/87	21	NA	3	NA	4	NA
5/14/87	17	NA	3	NA	3	NA
8/25/87	18	NA	3	NA	3	NA
11/10/87	23	NA	3	NA	3	NA
2/03/88	23	NA	3	NA	3	NA
4/28/88	19	NA	3	NA	3	NA
6/29/88	NA	26	NA	3.4	NA	4.0
6/29/88	NA	27	NA	3.8	NA	4.3
8/21/88	29	NA	6	NA	5	NA
8/23/88	20	23	4	3.1	3	3.9
3/2/89	16.0	NA	3.3	NA	1.9	NA

(a) Gas chromatography/mass spectrometry (GC/MS) analysis conducted by United States Testing Company, Inc. (UST). Quantifiable detection limit is estimated to be 2 μg/L for all three species. UST analyses performed after January 1, 1989, were by GC-Hall electron capture detector (HECD). Quantifiable detection limits by GC-HECD are two to three times lower than by GC/MS.

(b) GC-HECD analysis conducted by Pacific Northwest Laboratory. Quantifiable detection limit estimated to be 0.02 μg/L for all three species.

(c) NA = Not analyzed.

Pacific Northwest Laboratory Special Sampling Study at Solid Waste Landfill

Pacific Northwest Laboratory personnel conducted a series of sampling and analysis tests at the SWL and NRDWL from June 27 to July 11, 1988. The purposes of the study were to 1) intercompare sampling methods employing centrifugal pumps, bladder pumps, and bailers; 2) obtain a full set of carefully prepared samples for high-sensitivity GC analysis; 3) perform careful pH

TABLE A.2. Chlorinated Hydrocarbon Contaminants in Well 699-24-34B (μg/L)

Date	1,1,1-TCA		PCE		TCE	
	UST(a)	PNL(b)	UST(a)	PNL(b)	UST(a)	PNL(b)
5/20/87	56	NA(c)	7	NA	10	NA
6/18/87	40	NA	6	NA	8	NA
7/28/87	46	NA	5	NA	8	NA
11/15/87	64	60	8	NA	8	NA
11/15/87	61	NA	8	NA	8	NA
1/18/88	58	47	8	6.9	8	NA
4/22/88	41	55	8	8.5	6	NA
4/22/88	41	50	8	9.0	6	NA
6/27/88	NA	51	NA	9.6	NA	8.7
6/27/88	NA	50	NA	9.5	NA	8.6
7/7/88	NA	51	NA	9.6	NA	8.7
7/7/88	NA	50	NA	9.5	NA	8.6
7/27/88	34	36	7	7.6	6	5.7
7/27/88	35	NA	7	NA	5	NA
10/20/88	35	NA	7	NA	5	NA
3/2/89	27.0	NA	6.9	NA	3.5	NA

(a) Gas chromatography/mass spectrometry (GC/MS) analysis conducted by United States Testing Company, Inc. (UST). Quantifiable detection limit is estimated to be 2 μg/L for all three species. UST analyses performed after January 1, 1989, were by GC-Hall electron capture detector (HECD). Quantifiable detection limits by GC-HECD are two to three times lower than by GC/MS.

(b) GC-HECD analysis conducted by Pacific Northwest Laboratory. Quantifiable detection limit estimated to be 0.02 μg/L for all three species.

(c) NA = Not analyzed.

measurements on all SWL wells with a flow-through pH cell; and 4) test soil-gas analysis techniques and equipment. All objectives were satisfactorily met. The pH and soil results will be discussed in detail at a later time. Bladder pumps were added to two of the wells (699-24-34B and 699-24-35);

however, the pump in 699-24-35 did not perform satisfactorily and was not used. To facilitate rapid measurement of samples, the PNL mobile GC laboratory was moved to the SWL. The mobile laboratory was mounted inside a 30-ft motor home. A portable 15-kW generator also was set up at the site to provide power.

Volatile organic analysis (VOA) samples were collected in standard 40-mL VOA bottles, transferred to the mobile laboratory, and analyzed immediately. The wells were purged for times ranging from 20 to 40 min prior to collection of samples. A teeing system, containing two throttling valves and a critical orifice, was used to provide a low-flow path for VOA samples. The VOA samples from the centrifugal pumps were collected through a 1/4-in. tube at a flow rate of approximately 1 L/min. Bailer samples were taken with 1-L bailers lowered into the wells with a balloon winch and nylon fishing line; new dedicated bailers were used in the study. Approximately 20 ft of fishing line were discarded after each use to avoid cross contamination.

Samples were analyzed with a GC. The GC was equipped with two identical 30-m x 0.53-mm fused silica capillary columns. The columns were coated with a cross-linked and bonded stationary phase composed of cyanopropyl, phenyl, dimethylsiloxane. The two columns were tied together at the inlet and were routed to separate ECD and flame ionization detectors. Sample introduction was via a purge and trap unit. The purge and trap unit contained a sorption trap. Samples were thermally desorbed from the sorption trap and transferred to the columns through a heated transfer line. The purge and trap unit was modified by addition of a pneumatic valve actuator to permit full automation of the purge and trap cycle by the GC run table. The GC was equipped with two separate integrators to simultaneously integrate data from both detectors. Analytical measurements were performed in accordance with the guidelines set forth in EPA Method 502.2.

Analytical results for five species of interest in nine wells are presented in Tables A.3 through A.7. Table A.4 is of particular interest since it provides rather conclusive evidence for the presence of TCE at levels

comparable to the regulatory limit. The TCE levels close to or slightly greater than the 5-μg/L limit were seen 25 times in four different wells in this study. It should be noted that the regulatory limit is approximately 300 times the measured system blank.

TABLE A.3. 1,1,1-Trichloroethane Results (μg/L)

Well Number	Date Collected	Centrifugal Pump	Bladder Pump	Bailer
699-25-34C	6/29/88	5.9	NA[a]	6.1
699-25-34C	6/29/88	5.9	NA	6.1
699-24-34C	6/27/88	33	NA	35
699-24-34C	6/27/88	33	NA	34
699-24-34B	6/27/88	51	48	NA
699-24-34B	6/27/88	50	47	56
699-24-34B	7/7/88	52	49	52
699-24-34B	7/7/88	53	53	50
699-24-34B	7/7/88	52[b]	50[b]	48[b]
699-24-34A	6/27/88	40	NA	43
699-24-34A	6/27/88	NA	NA	44
699-23-34	6/29/88	49	NA	46
699-23-34	6/29/88	50	NA	49
699-24-33	6/29/88	26	NA	24
699-24-33	6/29/88	27	NA	26
699-24-35	7/11/88	4.1	NA	4.3
699-24-35	7/11/88	4.1	NA	4.1
699-25-34B	7/11/88	3.6	NA	NA
699-25-34B	7/11/88	3.5	NA	NA
699-26-33	7/11/88	0.85	NA	NA
699-26-33	7/11/88	0.85	NA	NA
System Blank		0.014		

(a) Not analyzed.
(b) 5-mL glass sampling syringe filled at well.

TABLE A.4. 1,1,2-Trichloroethene Results (μg/L)

Well Number	Date Collected	Centrifugal Pump	Bladder Pump	Bailer
699-25-34C	6/29/88	1.05	NA[a]	1.04
699-25-34C	6/29/88	1.05	NA	1.07
699-24-34C	6/27/88	5.3	NA	5.7
699-24-34C	6/27/88	5.4	NA	5.6
699-24-34B	6/27/88	8.7	8.2	NA
699-24-34B	6/27/88	8.6	8.1	9.4
699-24-34B	7/7/88	8.1	8.8	8.1
699-24-34B	7/7/88	8.1	8.2	8.0
699-24-34B	7/7/88	8.2[b]	7.8[b]	7.6[b]
699-24-34A	6/27/88	7.9	NA	8.4
699-24-34A	6/27/88	NA	NA	8.6
699-23-34	6/29/88	8.8	NA	8.3
699-23-34	6/29/88	9.0	NA	9.0
699-24-33	6/29/88	4.0	NA	3.6
699-24-33	6/29/88	4.3	NA	4.0
699-24-35	7/11/88	0.54	NA	0.59
699-24-35	7/11/88	0.55	NA	0.57
699-25-34B	7/11/88	0.65	NA	NA
699-25-34B	7/11/88	0.63	NA	NA
699-26-33	7/11/88	0.21	NA	NA
699-26-33	7/11/88	0.21	NA	NA
System Blank		0.017		

(a) Not analyzed.
(b) 5-mL glass sampling syringe filled at well.

TABLE A.5. 1,1,2,2-Tetrachloroethene Results (μg/L)

Well Number	Date Collected	Centrifugal Pump	Bladder Pump	Bailer
699-25-34C	6/29/88	0.70	NA[a]	0.70
699-25-34C	6/29/88	0.70	NA	0.75
699-24-34C	6/27/88	5.6	NA	6.2
699-24-34C	6/27/88	5.7	NA	5.9
699-24-34B	6/27/88	9.6	9.0	NA
699-24-34B	6/27/88	9.5	8.8	10.0
699-24-34B	7/7/88	8.6	8.0	8.6
699-24-34B	7/7/88	8.6	8.6	8.6
699-24-34B	7/7/88	8.6[b]	8.0[b]	7.6[b]
699-24-34A	6/27/88	7.0	NA	7.2
699-24-34A	6/27/88	NA	NA	7.4
699-23-34	6/29/88	7.8	NA	7.4
699-23-34	6/29/88	8.2	NA	8.0
699-24-33	6/29/88	3.4	NA	3.3
699-24-33	6/29/88	3.8	NA	3.6
699-24-35	7/11/88	0.54	NA	0.58
699-24-35	7/11/88	0.55	NA	0.55
699-25-34B	7/11/88	0.55	NA	NA
699-25-34B	7/11/88	0.51	NA	NA
699-26-33	7/11/88	0.092	NA	NA
699-26-33	7/11/88	0.090	NA	NA
System Blank		0.003		

(a) Not analyzed.
(b) 5-mL glass sampling syringe filled at well.

TABLE A.6. Chloroform Results (μg/L)

Well Number	Date Collected	Centrifugal Pump	Bladder Pump	Bailer
699-25-34C	6/29/88	0.33	NA[a]	0.34
699-25-34C	6/29/88	0.34	NA	0.35
699-24-34C	6/27/88	0.99	NA	1.00
699-24-34C	6/27/88	0.88	NA	0.98
699-24-34B	6/27/88	1.29	1.33	NA
699-24-34B	6/27/88	1.33	1.28	2.06
699-24-34B	7/7/88	1.59	1.40	1.44
699-24-34B	7/7/88	1.52	1.46	1.51
699-24-34B	7/7/88	1.46[b]	1.17[b]	1.47[b]
699-24-34A	6/27/88	1.12	NA	1.10
699-24-34A	6/27/88	1.02	NA	1.19
699-23-34	6/29/88	1.40	NA	1.48
699-23-34	6/29/88	1.35	NA	1.58
699-24-33	6/29/88	0.80	NA	0.60
699-24-33	6/29/88	0.82	NA	0.92
699-24-35	7/11/88	0.15	NA	0.15
699-24-35	6/11/88	0.15	NA	0.14
699-25-34B	7/11/88	0.34	NA	NA
699-25-34B	7/11/88	0.33	NA	NA
699-26-33	7/11/88	0.17	NA	NA
699-26-33	7/11/88	0.18	NA	NA
System Blank		0.040		

(a) Not analyzed.
(b) 5-mL glass sampling syringe filled at well.

TABLE A.7. Carbon Tetrachloride Results (μg/L)

Well Number	Date Collected	Centrifugal Pump	Bladder Pump	Bailer
699-25-34C	6/29/88	0.72	NA[a]	0.66
699-25-34C	6/29/88	0.70	NA	0.66
699-24-34C	6/27/88	0.33	NA	0.27
699-24-34C	6/27/88	0.27	NA	0.30
699-24-34B	6/27/88	0.30	0.26	0.37
699-24-34B	6/27/88	0.26	0.23	0.29
699-24-34B	7/7/88	0.28	0.32	0.27
699-24-348	7/7/88	0.28	0.29	0.27
699-24-34B	7/7/88	0.30[b]	0.29[b]	0.27[b]
699-24-34A	6/27/88	0.26	NA	0.25
699-24-34A	6/27/88	0.23	NA	0.26
699-23-34	6/29/88	0.28	NA	0.26
699-23-34	6/29/88	0.31	NA	0.30
699-24-33	6/29/88	0.41	NA	0.43
699-24-33	6/29/88	0.43	NA	0.40
699-24-35	7/11/88	0.30	NA	0.31
699-24-35	7/11/88	0.31	NA	0.31
699-25-34B	7/11/88	0.82	NA	NA
699-25-34B	7/11/88	0.80	NA	NA
699-26-33	7/11/88	0.43	NA	NA
699-26-33	7/11/88	0.43	NA	NA
System Blank		<0.003		

(a) Not analyzed.
(b) 5-mL glass sampling syringe filled at well.

CONCLUSIONS

The sampling program over the past 2 years has generated a large data base of chlorinated hydrocarbon data. While these data have not yet been subjected to a rigorous statistical review, a number of conclusions appear to be definitive.

1. Widespread, low-level chlorinated hydrocarbon contamination is detectable throughout the extended landfill area. The concentrations found in well 699-24-33 suggest that the contamination has been present at least since early 1986 and has undergone little change since then. The relative concentrations of contaminants in that well are similar to those in other wells closer to the landfill.

2. Contaminants detected include chloroform, TCA, TCE, PCE, DCA, and carbon tetrachloride. Chloroform is commonly found in chlorine-treated water; also, it may be a decomposition product of TCA. The most abundant species is TCA, and is commonly used as a degreaser solvent. The highest level found is only approximately one-quarter of the Drinking Water Standard but could be higher closer to the source (i.e., inside the landfill). Trichloroethene is present in four of the wells at levels of potential regulatory concern. The relative concentrations of TCA, TCE, PCE, and DCA are similar in all wells tested, including the site-wide well and the upgradient well. In contrast, carbon tetrachloride is relatively constant in all wells tested, although some increase was observed near the NRDWL. The carbon tetrachloride data are difficult to understand without further study.

3. The three sampling methods tested (centrifugal pump, bladder pump, and bailer) produced identical results in all cases. The bladder pump was judged to be unsatisfactory for routine use because of the high instantaneous flows produced during each pulse; however, the results showed little sensitivity to such effects.

APPENDIX B

HANFORD SITE SOIL-GAS ANALYSIS PROTOCOL

APPENDIX B

HANFORD SITE SOIL-GAS ANALYSIS PROTOCOL

BACKGROUND

The U.S. Environmental Protection Agency (EPA) experience with the Comprehensive Environmental Response, Compensation and Liability Act of 1980, as amended by the Superfund Amendments and Reauthorization Act of 1986, investigations has shown that subsurface and ground-water contamination by volatile organic constituents, particularly chlorinated hydrocarbons, represents one of the most persistent contamination issues under consideration throughout the United States. Volatile organic contamination of the ground water has been identified at several locations on the Hanford Site and is suspected at others. These contaminants are typically identified through ground-water monitoring and surveillance programs; however, direct measurement of ground-water contamination through drilling of sampling wells is a very expensive and time-consuming operation. High drilling costs have been a particularly serious problem on the Hanford Site. Well sampling techniques, while unquestionably necessary to provide hydrologic data and evidence of regulatory compliance, may nevertheless be limited in effectiveness for rapidly diagnosing the extent of plume spread of volatile organic contaminants particularly in areas where the ground water is relatively deep with correspondingly high costs per well. The soil-gas method was developed as a cost-effective alternative for generating relatively dense data grids on a short time scale. The soil-gas method can be used effectively as a preliminary screening tool for aiding in the optimal placement of monitoring wells. The soil-gas method has been adapted by Pacific Northwest Laboratory (PNL) to the needs of the Hanford Site. Areas of specific applicability at the Hanford Site include, but are not limited to, potential solvent contamination of the ground water in the 1100 Area and Horn Rapids Disposal Site, extensive carbon tetrachloride contamination in the 200-West Area, chlorinated hydrocarbon contamination at the Solid Waste Landfill (SWL), solvent contamination

in the 300 Area, trichloroethene contamination from the White Bluffs Acid Pickling Crib, and possible solvent contamination in other parts of the 100 Areas.

In favorable cases, the soil-gas method has been found to correlate well with directly measured concentrations in ground water. This is particularly true for chlorinated species with favorable Henry's Law properties. Under ideal conditions, the soil-gas concentration of each species present in the ground water will decrease linearly from the Henry's Law value at the water table to zero at the soil-air interface (assuming equilibrium at the interface and no diffusion of gas or mass transport by other driving force). The method has been far less successful with nonchlorinated species, which tend to be consumed by biological activity. Alternatively, methane and carbon dioxide may be present in the soil gas as reductive or oxidative decomposition products of subsurface organic materials. Some of the factors that influence soil-gas profiles include geologic properties of the vadose zone, soil-moisture content, temperature, depth to ground water and ground-water flow rate, phase separation, soil-organic content, temperature and temperature gradients, water-table oscillations, lithology of the aquifer, barometric effects, and rainfall. Interpretation of soil-gas data may thus be complex and highly site specific. Site-specific experience in representative geologic regimes and, if possible, careful comparisons with available "ground truth" (i.e., grab samples from wells) are thus crucial to full utilization of the method. This may be accomplished on the Hanford Site by careful studies at the SWL, which has favorable properties as a "ground truth" source with well-documented and reasonably constant contamination by at least five chlorinated hydrocarbon species at readily detectable levels. The SWL also is well documented with respect to geologic and hydrologic characteristics and represents a reasonably typical Hanford setting. Samples taken at close proximity to existing ground-water monitoring wells will provide an opportunity to determine the relationship between measured soil-gas concentrations and ground-water contaminant concentrations.

SUMMARY OF METHOD

At present, no universally or regulatory accepted method is available for the performance of soil-gas surveys. Consequently, considerable latitude is possible for the exact choice of methodology employed. Soil-gas probes are typically emplaced 3 to 6 ft below the surface. If possible, all samples should be taken at the same penetration depth to facilitate interpretation. In the PNL procedure, a constant depth of 4 ft will, if possible, be employed for all samples. Probe penetration of less than 3 ft will be considered to be penetration refusal, and the probe will be moved to a new location. Gas samples drawn through the probe by a low-volume pump may be collected either by a gas sampling syringe or a sorption trapping device. The sorption trap method offers much greater sensitivity at the expense of analytical complexity. The syringe method is of adequate sensitivity and is, in general, preferable because of its simplicity, speed, and reliability. All work performed by PNL will use the direct sampling method employing gas-tight syringes of volumes ranging from 0.1 to 5 mL. Samples also will be collected in 300- to 1000-mL flow-through gas sampling flasks so that repeat measurements may be made in the laboratory for improved dynamic range. Analysis of the drawn sample is performed by gas chromatography (GC) employing detectors with both broad spectrum sensitivity [i.e., flame ionization (FID)] and halogen selectivity [i.e., electron capture (ECD)]. The ECD, in particular, is an extremely sensitive device making it possible to use relatively small sample volumes. The GC system employed by PNL uses a split inlet with separate capillary columns connected to the ECD and FID. The analytical work itself is performed according to appropriate EPA guidelines for the analysis of volatile organics by GC. Suitable calibration standards are available to permit identification and quantification of the most commonly detected species. These include at a minimum the following compounds: 1,1,1-trichloroethane, carbon tetrachloride, trichloroethene, 1,2-dichloroethane, 1,1-dichloroethane, tetrachloroethene, cis- and trans-dichloroethene, chloroform, methylene chloride, chlorobenzene, benzene, toluene, ethyl benzene, m+p-xylene, o-xylene, methylethyl ketone, methylisobutyl ketone,

hexane, heptane, and octane. Calibration for other species also may be performed if necessary to identify unknowns detected during actual field work.

Methane also may be measured in the same samples using a second GC employing an FID. Addition of a tee fitting in the sampling train also allows field determinations of carbon dioxide by colorimetric tubes.

SAMPLING

SAMPLE PROBES

Sample probes are constructed according to the design of LaBrecque et al. (1985). Detailed machine drawings of the probe and associated hardware have been provided by Kerfoot and Barrows (1987). The PNL version of the design has been modified somewhat to provide a sacrificial penetrator tip slipped over the end of the probe to prevent clogging of the sampling ports during probe entry. Other design improvements include a larger diameter probe body (1 in.) to provide better durability in rocky soil and the use of Acme threads in place of pipe threads and Swagelok-type fittings on the interior plumbing to eliminate leak problems associated with vibration. The probes and tips are mass produced in the 300 Area machine shop. Several different probe sizes, ranging from 5 to 8 ft, have been used. The probes are of all-steel construction to minimize carryover of volatile organics. Following assembly, the probes are pressure leak checked. Probes will be cleaned with methylene chloride followed by acetone and methanol to remove machine oil prior to final assembly. Probes will be placed in the ground to a nominal depth of 4 ft by hammering with a vibratory hammer. Both electric and pneumatically powered percussion hammers are available. A slide hammer also is available for manual probe insertion in remote areas. Following penetration to the required depth, the probe will be withdrawn 2 in. to allow separation from the sacrificial tip. For work in excessively rocky soil, a powered auger with a 6-in. bit can be used to facilitate entry of the probe. In that case, the auger will drill a hole to within 12 in. of the required depth. The probe will then be emplaced in the hole and hammered to the required depth. The hole will be carefully backfilled with spoils and firmly tamped down. A sharpened solid steel bar also may be used in rocky conditions to create a channel for probe entry. In that case, the probe is simply reinserted in the same hole and hammered to the required depth. That procedure greatly reduces stress on the probes and increases their working lifespan. In either case, the probes should be left in the ground for at least 12 h prior to sampling to allow recovery of the soil-gas profile following

penetration. The probe will be removed by reverse hammering or with a mechanical jack, if necessary, after completion of sampling.

SAMPLE COLLECTION

The sample collection train consists of a 1/8-in.-diameter stainless steel tube connected to a gas sampling bulb with O-ring-sealed high-vacuum fittings. Gas is drawn through a 300- to 1000-mL gas sampling bulb by a battery powered pump (1 to 4 L/min). The pump will be used at a flow rate of 1 L/min. The rotameter flow meter on the pump may be used to verify the presence of flow through the probe. A very sensitive pressure sensor in the pump shuts the pump down automatically if the pump starts to pull vacuum. The sample train is tested by plugging prior to each use to verify that it is leak tight, and is then connected to the probe and flow verified. In the event that the probe tip is found to be plugged with soil, remedial measures are implemented. This remediation can simply include lifting the probe a few inches and tapping to clear the tip. If that procedure is not successful, a short burst of compressed air may be used to remove the obstruction. If flow is still obstructed, the probe is removed, cleared, and reinserted in, or as close as possible to, the same hole. To collect a sample, the pump is run for a period of time sufficient to completely purge the dead volume of the system, which is typically dominated by the sample bulb volume. A nominal purge time of at least 5 min prior to sampling should be allowed to completely purge the gas sampling bulb. No internal combustion engines should be operated in the immediate vicinity during sample collection. If a carbon dioxide measurement is desired, the sampling train is modified to include a tee fitting ahead of the sample bulb. A colorimetric indicator tube is connected to the tee and exposed with a hand bellows pump operated according to the specifications listed on the tubes. Tube ranges are available (0.01 to 0.3 and 0.1 to 6.0 volume %). Following collection of the carbon dioxide sample, the main sample bulb is then valved off, labeled, and removed to the mobile laboratory for analysis. Sample location, pump time, and any other pertinent observations, including meteorological conditions, will be recorded on the field record sheets and field notebook. The probe may be cleaned and moved to a new location while the sample is being analyzed. Prior to reuse,

the probe tip is unscrewed from the body of the probe, cleaned, and inspected to verify that the fittings are tight. The air sampling pump should be placed on its battery charger at the completion of each day's sampling.

ANALYSIS

MOBILE LABORATORY

Analysis of the samples is performed as soon as possible following their receipt. Samples should not be held more than 24 h without analysis. All analytical equipment is located in the PNL Environmental Sciences Department Mobile Gas Chromatography Laboratory. This facility is a 30-ft motor home. If possible, it is preferable to locate the mobile laboratory within 50 ft of usable external power so that the 220-V umbilical system may be used, thus avoiding the need to arrange in-field fuel refills and generator maintenance. Alternatively, a 15-kW trailer-mounted generator is available to the project and has been used successfully to support field use of the mobile laboratory. The mobile laboratory should also, if consistent with electrical requirements, be located in a reasonably central location near the site under investigation so that only one setup period is needed.

INSTRUMENTATION

Samples will be analyzed with a GC. The GC is equipped with two identical 30-m x 0.53-mm fused silica capillary columns. The columns are coated with a cross-linked and bonded stationary phase composed of cyanopropyl, phenyl, dimethylsiloxane. The two columns are teed together at the inlet and are routed to separate ECDs and FIDs. Sample introduction is via a purge and trap unit. Samples can be introduced into the purge and trap unit in either gaseous or liquid form through the same inlet fitting, thus permitting calibration of the system by volatile organic analysis water standards. The purge and trap unit contains a sorption trap. Samples are thermally desorbed from the trap and transferred to the columns through a heated transfer line. The purge and trap unit has been modified by addition of a pneumatic valve actuator to permit full automation of the purge and trap cycle by the GC run table. The GC is equipped with two separate integrators to simultaneously integrate data from both detectors.

Methane analyses are performed with a compact GC. This compact GC is equipped with an FID. Separations are performed by a 6-ft x 1/8-in.-inside

diameter column packed with 80- to 100-mesh packing. Samples are introduced through a 1-mL automated sample loop. The GC is run in isothermal mode at 105°C.

ANALYTICAL METHODOLOGY

At the present time, there are no standard reference analytical methods for analysis of soil-gas samples. Analytical measurements will be performed in accordance with the general guidelines set forth in EPA Method 502.2. There are several significant exceptions to the method as presented. Method 502.2 is a capillary column GC method for analysis of volatile organic compounds in water. The method employs a Hall electrolytic conductivity detector (HECD) for halogen selectivity in series with a photoionization detector (PID) for detection of a broad range of compounds. The detector used in this work for halogen selectivity is an ECD. The ECD is considerably more sensitive than the HECD for the most common chlorinated solvent contaminants and has adequate halogen selectivity to satisfy the goals of the method. The FID, on the other hand, is less selective than the PID; therefore, the FID provides the maximum assurance of broad spectrum response. Incompatibilities in makeup gas require that the two detectors be run in parallel rather than in series, which is clearly a disadvantage of the configuration. The method of sample introduction has been modified to accommodate either gas or water samples. The purge and trap cell is filled with 5 mL of boiled deionized water. Gas samples in gas-tight syringes are introduced through the normal sample inlet of the purge and trap unit, bubbled through the water, and passed through to the sorption trap. The initial injection is followed by a second volume of ambient air to clear the syringe and sample inlet of any residual analyte. The GC is then cycled through a complete purge and trap cycle according to EPA guidelines and manufacturer's recommendations. Calibration is performed as described below with water samples; however, the units used for calibration are micrograms of total sample recovered rather than concentration. Gas concentrations can then be manually calculated by dividing by the injected volume.

The quality of soil-gas data will be assessed through the use of replicate measurements, blanks, standards, and interlaboratory splits. In

general, at least one replicate measurement and standard shall be analyzed for every 20 points, blanks shall be run for every tenth sample, and an interlaboratory split shall be collected for every twentieth sample.

CALIBRATION

External calibrations will be performed with water samples prepared according to standard methods, and introduced into the purge and trap unit according to manufacturer's recommendations. Linearity will be verified for five concentration ranges. Working standards will be prepared by dilution with boiled, deionized water of stock solution of the analytes of interest dissolved in methanol. High-end calibrations will be performed for the following species at the specified concentrations: chloroform (10 ppb), 1,1,1-trichloroethane (6 ppb), tetrachloroethene (3 ppb), carbon tetrachloride (3 ppb), and trichloroethene (6 ppb). Two-, five-, ten-, and twenty-fold dilutions with boiled, deionized water will then be made to verify linearity. Response factors will be computed for both the ECD and FID channels. Detection limits will be calculated by reference to the low-end standard and ambient air blank. Calibration factors will be verified once daily prior to sample analysis with a mid-range standard. In addition to the species discussed above, stock solutions also will be available for the following analytes: 1,2-dichloroethane, 1,1-dichloroethane, cis- and trans-dichloroethene, methylene chloride, chlorobenzene, benzene, toluene, ethyl benzene, m+p-xylene, o-xylene, methylethyl ketone, methylisobutyl ketone, hexane, heptane, and octane. Dilutions of those analytes shall be used for accurate determination of retention time; however, those species will not normally be quantified unless found in actual soil-gas samples.

Methane calibration is performed with a gas standard containing 9.3 ppmv of methane in air. All GC work is performed in the linear region and compared to a single point calibration.

VALIDATION

The validity of the calibration procedure will be established as follows. Gas standards for the analytes of interest will be prepared by

addition of 10-μL samples of stock solution in methanol to gas sampling bulbs of accurately known volume. The volume of the bulb will be determined by filling with water and weighing. Evaporation of the methanol sample solution inside the bulb will produce a dilute analyte-air mixture of accurately known concentration. Bulbs will be heated to 100°C for at least 1 h to promote complete mixing. Samples drawn from the gas sampling bulb will be injected into the GC and compared with samples of the same analyte introduced into the purge and trap unit as water solution.

BLANKS

Two types of blanks must be considered; i.e., water blanks and gas blanks. At least one set of each type of blank will be run prior to initiation of sample analysis on a daily basis. More frequent analysis of blanks will be performed if blank contamination is detected or suspected. Water blank analysis will be performed on samples of reboiled deionized water produced in PNL's laboratories. Gas blanks will consist of ambient air drawn through the entire sampling train set up at least 0.5 m above the ground surface, collected, and treated as a sample. Care must be taken in collecting ambient air samples to ensure that the air sampled is pristine.

SAMPLE ANALYSIS

Samples will be analyzed as soon as possible following receipt in the mobile laboratory. Samples will be withdrawn from the gas sampling bulb with a gas-tight syringe fitted with a 2-in. sampling needle. In areas with suspected high contamination, an initial sample of 200 μL will be taken with a 1-mL syringe to avoid accidental overload of the GC. Based on the result, a scale-up to 5 mL may be performed. At least 10% of the samples showing positive detection on the 5-mL or smaller sample should be run in duplicate to provide data for estimation of precision. Syringes and gas sampling bulbs will be vacuum flushed prior to reuse. Bulbs should be disassembled and baked prior to reuse if they have been exposed to contaminant levels in excess of 5 ng/mL.

DATA QUALITY OBJECTIVES

The soil-gas survey method is a cost-effective screening tool intended as a supplement to (not a replacement for) well sampling. The goal of the program is thus to obtain data of adequate quality to determine if certain types of contaminants exist in the subsurface and provide a reasonable estimate of the areal extent of the contamination. The procedure should, if possible, have adequate sensitivity to detect contaminants in the ground water at or below their respective Maximum Contaminant Levels; however, that goal is only possible for a limited number of species, including carbon tetrachloride, chloroform, 1,1,1-trichloroethane, tetrachloroethene, and trichloroethene. The spacing of the data grid should be sufficiently fine to permit detailed contour plotting needed for the siting of wells. A spatial resolution of half the distance to the ground water is useful as a guideline for minimum spacing of sampling points. Limitations of the method should be recognized. The soil-gas survey method is not sensitive to species of limited volatility or any inorganic or radioactive species. The method has been found to be best applied to halogenated (primarily chlorinated) species because of bacterial or other degradation effects for most nonhalogenated species. The method cannot easily distinguish between ground-water and vadose zone contamination. Analytical sensitivity is limited by distance to ground water. Analytical sensitivity is otherwise limited on a species-by-species basis by a variety of physical parameters for the individual analytes, such as Henry's Law constant and diffusion coefficient. While correlations with ground-water concentration can be made, the method should normally be used only as a relative screening tool. Attempts to derive quantitative estimates of ground-water concentrations should be approached with extreme caution. Accuracy and precision of data should be consistent with best available measurement technology and EPA guidelines for the measurement of volatile organics in water. Precision of individual measurements should be between 5% or better depending on the level detected.

QUALITY ASSURANCE

Work was performed in accordance with Quality Assurance Manual (PNL 1989) Impact Level 3.

DATA REPORTING

Soil-gas concentrations are reported in micrograms of analyte per liter of air. Air volumes are measured with a gas sampling syringe at ambient temperature and pressure. Data have been plotted on a copy of the SWL site map with contours drawn by computer algorithm. Separate maps are drawn for each species detected.

REFERENCES

Kerfoot, H. B., and L. J. Barrows. 1987. *Soil-Gas Measurement of Subsurface Organic Contamination.* EPA-EMSL 68-03-3245, Draft Final Report, U.S. Environmental Protection Agency, Las Vegas, Nevada, 50 pp.

LaBrecque, D. J., S. L. Plerett, A. T. Baker, and J. W. Hess. 1985. *Hydrocarbon Plume Detection at Stove Pipe Wells, California.* EPA-EMSL 68-03-3050, Final Report, U.S. Environmental Protection Agency, Las Vegas, Nevada, 34 pp.

PNL. 1989. *Quality Assurance Manual, PNL-MA-70.* PNL-7000, Pacific Northwest Laboratory, Richland, Washington.

DISTRIBUTION

No. of Copies

OFFSITE

2 DOE/Office of Scientific and Technical Information

ONSITE

2 DOE Richland Operations Office

E. A. Bracken
M. W. Tiernan

8 Westinghouse Hanford Company

K. R. Fecht
T. R. Hendrix
F. N. Hodges
G. L. Wiggins
C. D. Wittreich (3)
J. F. Woods

No. of Copies

32 Pacific Northwest Laboratory

R. W. Bryce
R. M. Ecker
J. C. Evans (5)
J. W. Falco
R. M. Fruland (5)
D. W. Glover
J. M. Hales
M. S. Hanson
P. C. Hays
B. V. Johnston
K. B. Olsen
W. T. Pennell
R. G. Riley
L. E. Rogers
R. L. Skaggs
R. M. Smith
C. Veverka
R. E. Wildung
Publishing Coordination
Technical Report Files (5)