0029776

WHC-EP-0566

Underground Storage Tank - Integrated Demonstration Participant Site Characteristic Summary

RECORD COPY

Prepared for the U.S. Department of Energy
Office of Environmental Restoration and
Waste Management

Westinghouse
Hanford Company Richland, Washington

Hanford Operations and Engineering Contractor for the
U.S. Department of Energy under Contract DE-AC06-87RL10930

AUG 1993
RECEIVED
EDMC

Approved for Public Release

WHC-EP-0566

UC-600

Underground Storage Tank - Integrated Demonstration Participant Site Characteristic Summary

J. K. Rouse
T. J. McLaughlin
S. P. Airhart
E. J. Jensen
S. L. Lindberg
D. D. Robinson
Bovay Northwest Inc.

J. M. Cruse
Westinghouse Hanford Company

Date Manuscript Completed
September 1992

Date Published
January 1993

Prepared for the U.S. Department of Energy
Office of Environmental Restoration and
Waste Management

Westinghouse Hanford Company P.O. Box 1970 Richland, Washington 99352

Hanford Operations and Engineering Contractor for the
U.S. Department of Energy under Contract DE-AC06-87RL10930

Approved for Public Release

LEGAL DISCLAIMER

This report was prepared as an account of work sponsored by an agency of the United States Government. Neither the United States Government nor any agency thereof, nor any of their employees, nor any of their contractors, subcontractors or their employees, makes any warranty, express or implied, or assumes any legal liability or responsibility for the accuracy, completeness, or any third party's use or the results of such use of any information, apparatus, product, or process disclosed, or represents that its use would not infringe privately owned rights. Reference herein to any specific commercial product, process, or service by trade name, trademark, manufacturer, or otherwise, does not necessarily constitute or imply its endorsement, recommendation, or favoring by the United States Government or any agency thereof or its contractors or subcontractors. The views and opinions of authors expressed herein do not necessarily state or reflect those of the United States Government or any agency thereof.

This report has been reproduced from the best available copy. Available in paper copy and microfiche.

Available to the U.S. Department of Energy
and its contractors from
Office of Scientific and Technical Information
P.O. Box 62
Oak Ridge, TN 37831
(615) 576-8401

Available to the public from the U.S. Department of Commerce
National Technical Information Service
5285 Port Royal Road
Springfield, VA 22161
(703) 487-4650

Printed in the United States of America

DISCLM-1.CHP (1-91)

WHC-EP-0566
Impact Level 4

Document Title: Underground Storage Tank - Integrated Demonstration Participant Site Characteristic Summary

Prepared by:
J. K. Rouse
T. J. McLaughlin
S. P. Airhart
E. J. Jensen
S. L. Lindberg
D. D. Robinson

J. M. Cruse
Remediation Systems

Date 12/21/92

Approved by:
R. L. Gilchrist, Manager
Technology Demonstration Programs

Date 1/13/93

ORIGINAL

INFORMATION RELEASE REQUEST

References: WHC-CM-3-4

COMPLETE FOR ALL TYPES OF RELEASE

Purpose

- [] Speech or Presentation
  - [] Full Paper
  - [] Summary
  - [] Abstract
  - [] Visual Aid
- [] Speakers Bureau
- [] Poster Session
- [] Videotape

(Check only one suffix)

- [] Reference
- [x] Technical Report
- [] Thesis or Dissertation
- [] Manual
- [] Brochure/Flier
- [] Software/Database
- [] Controlled Database
- [] Other

New ID Number: WHC-EP-0566

Existing ID Number (include revision, volume, etc.): WHC-EP-0566, Draft

If previously cleared, list ID number:

Date Release Required: January 26, 1993

Title: Underground Storage Tank - Integrated Demonstration Participant Site Characteristic Summary

Unclassified Category: UC-600

Impact Level: 4

COMPLETE FOR SPEECH OR PRESENTATION

Title of Journal:

Group or Society Sponsoring:

Date(s) of Conference or Meeting:

City/State:

Will proceedings be published? [] Yes [] No

Will material be handed out? [] Yes [] No

Title of Conference or Meeting:

CHECKLIST FOR SIGNATORIES

Review Required per WHC-CM-3-4	Yes	No	Reviewer Name (printed)	Signature	Date
Classification/Unclassified Controlled Nuclear Information	[]	[x]			
Patent - General Counsel	[x]	[]	SW BERGLIN	S W Berglin	9/10/92
Legal - General Counsel	[x]	[]			
Applied Technology/Export Controlled Information or International Program	[]	[x]			
WHC Program	[x]	[]	T. E. Gates	by CM Johnson	9/15/92
Communications	[]	[x]			
DOE-RL Program	[x]	[]	D. E. Trader	DE Trader	2/1/93 + see com
Publication Services	[x]	[]	K. A. Christensen	K.A. Christensen	2/8/93
References Available to Intended Audience	[x]	[]	J. M. Cruse	JM Cruse	9/4/92
Transmit to DOE-HQ/Office of Scientific and Technical Information	[x]	[]			

Information conforms to all applicable requirements. The above information is certified to be correct.

Author/Requestor (Printed/Signature) Date: J. M. Cruse JM Cruse 9/4/92

Responsible Manager (Printed/Signature) Date: CM Johnson for T. E. Gates 9/15/92

Intended Audience: [X] Internal [X] Sponsor [X] External

INFORMATION RELEASE ADMINISTRATION APPROVAL STAMP

Stamp is required before release. Release is contingent upon resolution of mandatory comments.

APPROVED FOR RELEASE — OFFICIAL DOCUMENT — MB — Date 2/8/93

Date Received 9/17/92 KG

UNDERGROUND STORAGE TANK - INTEGRATED DEMONSTRATION PARTICIPANT SITE CHARACTERISTIC SUMMARY

J. K. Rouse, T. J. McLaughlin, S. P. Airhart,
E. J. Jensen, S. L. Lindberg, and D. D. Robinson
Bovay Northwest Inc.

J. M. Cruse
Westinghouse Hanford Company

ABSTRACT

This document serves as a baseline information resource for activities associated with the U.S. Department of Energy Underground Storage Tank - Integrated Demonstration Program. Technologies being developed by the program are targeted toward tank waste remediation actions at the following participant sites: Hanford, Savannah River, Oak Ridge, Idaho, and Fernald.

The primary focus of the document is to provide information regarding expected environments in which Underground Storage Tank - Integrated Demonstration-developed technologies must function. This document should aid principal investigators in determining if technology concepts may have application to underground storage tank and near-field environments, given site baseline characteristics and conditions. A summary of each participant site's history, description, and process history; climatic conditions; retrieval facilities (if any); waste characterization capabilities; and underground storage tank physical, chemical, radiological, and geologic conditions is provided.

Detailed information is provided for a total of 334 underground storage tanks distributed among the five participant sites (Hanford, 177; Savannah River, 51; Oak Ridge, 91; Idaho, 11; and Fernald, 4), including type, location, operating history, construction materials, capacity, waste type, environmental status, and radiological and chemical characteristics.

Recipients of this document are encouraged to provide comments and input based on additional information and changes in the participant sites' underground storage tank data. Revisions are planned periodically to reflect any new information received. Any input or comments should be addressed in writing to the Underground Storage Tank - Integrated Demonstration Program Office, as follows:

C. M. Johnson, UST-ID Program
Westinghouse Hanford Co., MSIN L5-63
P.O. Box 1970
Richland, WA 99352

EXECUTIVE SUMMARY

This document serves as a baseline information resource for activities associated with the U.S. Department of Energy Underground Storage Tank - Integrated Demonstration Program. Its primary purpose is to provide information regarding expected environments that proposed technologies must function within. This document should aid principal investigators in determining applicability of technology concepts in underground storage tank and near-field environment remediation actions, given site baseline characteristics and conditions.

Technologies being developed by the UST-ID Program are targeted toward tank waste remediation actions at the following DOE participant sites: Hanford Site, Washington; Savannah River Site, South Carolina; Oak Ridge National Laboratory, Tennessee; Idaho National Engineering Laboratory, Idaho; and Fernald Environmental Management Project, Ohio. The scope includes 334 underground storage tanks that currently contain 381,802 m^3 (100.9 Mgal) of high-level and low-level radioactive waste. The 784.5 MCi of radionuclides are distributed primarily among the transuranic elements and some fission products (e.g., ^{137}Cs and ^{90}Sr). The waste contains a wide variety of hazardous and nonhazardous chemical components, ranging from sodium salts, acids, metal oxides, and heavy metals. Approximately half of the waste is composed of sodium nitrate and nitrites. Water accounts for 31.3% of the waste. There are also large amounts of metal oxides, especially iron and aluminum oxide. In-tank atmospheric conditions vary from near ambient to temperatures over 93 °C (200 °F), with some tanks occasionally containing potentially explosive gas mixtures. Tank void space radiation fields can be as high as 10,000 R/h. Of the total participant site inventory, the tanks at the Hanford Site and the Savannah River Site contain most of the waste, 60.4%

and 33.7%, respectively. Site climatic conditions vary from arid desert conditions at the Hanford Site and the Idaho National Engineering Laboratory to humid forest conditions at the Savannah River Site.

This document addresses only underground and below-grade tanks. It generally does not address storage tanks inside existing structures or above-grade tanks. The only exceptions are the Fernald silos, which are above-grade but have bermed sides for radiation shielding. The scope of the document covers those tanks designed for or currently storing radioactive waste. Underground storage tanks for the storage of nonradioactive material (e.g., petroleum) are outside the scope of this document.

The information for this document was compiled primarily from publicly available and fully referenceable documentation. During the research stage of this document, it was found that the availability of such documentation varied from site to site. This can be attributed partly to the fact that the U.S. Department of Energy has entered into Federal Facility Agreements with the U.S. Environmental Protection Agency and the respective state agencies at different times at the sites. For example, the Hanford Site has had a Federal Facility Agreement in place since 1989, while the Oak Ridge National Laboratory entered into its Federal Facility Agreement as recently as January 1992. As a result, the Oak Ridge Reservation is at a different stage in its underground storage tank remediation and documentation efforts as compared to the Hanford Site.

The characterization, retrieval, segregation, treatment, closure, and disposal of wastes in and near the underground storage tanks described in this document may be one of the most complex and resource-intensive cleanup initiatives ever attempted by a government agency.

CONTENTS

1.0 INTRODUCTION 1-1
1.1 SITE OVERVIEW 1-1
1.1.1 History and Missions 1-1
1.1.2 Climate/Weather Conditions 1-4
1.2 TANK AND WASTE INVENTORY AND CONDITIONS 1-4
1.2.1 Tank Waste Characteristics 1-5
1.2.2 Tank Void Space Conditions 1-8
1.3 TANK EXTERIOR AND NEAR-FIELD CONDITIONS 1-9
1.3.1 Leakage 1-9
1.3.2 Overall Hydrology 1-10
1.4 DOCUMENT ORGANIZATION 1-10
1.5 REFERENCES 1-10

2.0 UNDERGROUND STORAGE TANK - INTEGRATED DEMONSTRATION PROGRAM OVERVIEW 2-1

3.0 SUMMARY OF PARTICIPANT SITES 3-1
3.1 HANFORD SITE, WASHINGTON 3-1
3.2 FERNALD ENVIRONMENTAL MANAGEMENT PROJECT, OHIO 3-2
3.3 IDAHO NATIONAL ENGINEERING LABORATORY, IDAHO 3-2
3.4 OAK RIDGE SITE, TENNESSEE 3-6
3.5 SAVANNAH RIVER SITE, SOUTH CAROLINA 3-6

4.0 HANFORD SITE, WASHINGTON 4-1
4.1 HANFORD SITE INTRODUCTION AND HISTORY 4-1
4.2 HANFORD SITE DESCRIPTION 4-3
4.3 AMBIENT WEATHER AND CLIMATE CONDITIONS 4-11
4.3.1 Climate 4-11
4.3.2 Precipitation 4-11
4.3.3 Winds 4-12
4.3.4 Temperatures 4-12
4.4 GEOLOGICAL AND HYDROLOGICAL CONDITIONS 4-13
4.5 PROCESS HISTORY 4-13
4.5.1 Bismuth Phosphate Process 4-16
4.5.2 Tributyl Phosphate Process and Sodium Ferrocyanide Operations 4-18
4.5.3 Reduction-Oxidation Process 4-18
4.5.4 Plutonium-Uranium Extraction Process 4-21
4.5.5 Plutonium Recovery and Finishing Operations 4-22
4.5.6 Waste Fractionation Process 4-22
4.6 UNDERGROUND STORAGE TANK PHYSICAL CHARACTERISTICS 4-23
4.6.1 Tank Overview 4-24
4.6.2 Internal Monitoring Systems 4-33
4.6.3 Underground Storage Tank Auxiliaries 4-34
4.7 UNDERGROUND STORAGE TANK WASTE PHYSICAL DESCRIPTIONS . . . 4-34
4.7.1 Supernatant Description 4-35
4.7.2 Sludge Description 4-37
4.7.3 Salt Cake Description 4-37
4.7.4 Double-Shell Slurry Description 4-37
4.7.5 Other Waste Descriptions 4-37
4.7.6 Unique Contents of the Underground Storage Tanks . 4-38

CONTENTS (cont.)

4.7.7 High-Priority Waste Tank Safety Issues 4-39
4.8 WASTE CHARACTERIZATION CAPABILITIES 4-43
4.8.1 Tank Core Samples 4-43
4.8.2 Track Radioactive Components 4-44
4.9 UNDERGROUND STORAGE TANK WASTE CHEMICAL CHARACTERISTICS . . 4-44
4.10 UNDERGROUND STORAGE TANK WASTE RADIOLOGICAL CHARACTERISTICS 4-46
4.11 FACILITIES FOR PROCESSING RETRIEVED TANK WASTE 4-47
4.12 SOIL AND GROUNDWATER CONTAMINATION 4-49
4.12.1 Leak Detection 4-49
4.12.2 Leak Collection 4-52
4.13 REFERENCES 4-53

5.0 FERNALD ENVIRONMENTAL MANAGEMENT PROJECT, OHIO 5-1
5.1 FERNALD ENVIRONMENTAL MANAGEMENT PROJECT INTRODUCTION AND HISTORY 5-1
5.2 FERNALD ENVIRONMENTAL MANAGEMENT PROJECT DESCRIPTION . . . 5-2
5.3 AMBIENT WEATHER AND CLIMATE CONDITIONS 5-5
5.3.1 Climate 5-5
5.3.2 Precipitation 5-5
5.3.3 Winds 5-5
5.3.4 Temperatures 5-6
5.4 GEOLOGICAL AND HYDROLOGICAL CONDITIONS 5-6
5.5 PROCESS HISTORY 5-6
5.5.1 Wet Solids Processing 5-14
5.5.2 Slurry Liquor Recovery 5-16
5.6 UNDERGROUND STORAGE TANK PHYSICAL CHARACTERISTICS 5-17
5.6.1 General Tank Arrangement 5-18
5.7 UNDERGROUND STORAGE TANK WASTE PHYSICAL DESCRIPTIONS . . . 5-22
5.7.1 K-65 Sludge Description 5-22
5.7.2 Metal Oxide Description 5-22
5.8 WASTE CHARACTERIZATION CAPABILITIES 5-23
5.9 UNDERGROUND STORAGE TANK CHEMICAL CHARACTERISTICS 5-23
5.10 UNDERGROUND STORAGE TANK WASTE RADIOLOGICAL CHARACTERISTICS 5-23
5.11 FACILITIES FOR PROCESSING RETRIEVED TANK WASTE 5-23
5.12 SOIL AND GROUNDWATER CONTAMINATION 5-26
5.13 REFERENCES 5-26

6.0 IDAHO NATIONAL ENGINEERING LABORATORY, IDAHO 6-1
6.1 IDAHO NATIONAL ENGINEERING LABORATORY INTRODUCTION AND HISTORY 6-1
6.2 IDAHO NATIONAL ENGINEERING LABORATORY DESCRIPTION 6-2
6.2.1 Idaho Chemical Processing Plant 6-6
6.3 AMBIENT WEATHER AND CLIMATE CONDITIONS 6-6
6.3.1 Climate 6-6
6.3.2 Precipitation 6-8
6.3.3 Winds 6-8
6.3.4 Temperatures 6-9

CONTENTS (cont.)

6.4 GEOLOGICAL AND HYDROLOGICAL CONDITIONS 6-9
6.4.1 Geological Conditions 6-9
6.4.2 Hydrological Conditions 6-9
6.5 PROCESS HISTORY (ICPP) 6-12
6.5.1 Nuclear Fuel Reprocessing 6-12
6.5.2 Waste Calcining 6-13
6.6 UNDERGROUND STORAGE TANK PHYSICAL CHARACTERISTICS 6-15
6.6.1 Tank Design Information 6-15
6.6.2 Vault Design Information 6-17
6.6.3 Idaho Chemical Processing Plant High-Level Liquid Waste Handling 6-17
6.6.4 Tank Monitoring Systems 6-18
6.7 UNDERGROUND STORAGE TANK WASTE PHYSICAL CHARACTERISTICS . . 6-19
6.8 WASTE CHARACTERIZATION CAPABILITIES 6-21
6.9 UNDERGROUND STORAGE TANK WASTE CHEMICAL CHARACTERISTICS . . 6-21
6.10 UNDERGROUND STORAGE TANK WASTE RADIOLOGICAL CHARACTERISTICS 6-22
6.11 FACILITIES FOR PROCESSING RETRIEVED TANK WASTE 6-24
6.12 SOIL AND GROUNDWATER CONTAMINATION 6-24
6.13 REFERENCES 6-25

7.0 OAK RIDGE SITE, TENNESSEE 7-1
7.1 OAK RIDGE SITE INTRODUCTION AND HISTORY 7-1
7.2 OAK RIDGE SITE DESCRIPTION 7-2
7.3 AMBIENT WEATHER AND CLIMATE CONDITIONS 7-4
7.3.1 Climate 7-4
7.3.2 Precipitation 7-4
7.3.3 Wind 7-9
7.4 GEOLOGICAL AND HYDROLOGICAL CONDITIONS 7-9
7.5 PROCESS DESCRIPTION 7-9
7.6 UNDERGROUND STORAGE TANK PHYSICAL CHARACTERISTICS 7-13
7.6.1 Inactive Tanks 7-14
7.6.2 Active Tanks 7-27
7.7 UNDERGROUND STORAGE TANK WASTE PHYSICAL DESCRIPTION 7-33
7.7.1 Inactive Underground Storage Tanks 7-33
7.7.2 Active Underground Storage Tanks 7-34
7.8 WASTE CHARACTERIZATION CAPABILITIES 7-36
7.8.1 Existing 7-36
7.8.2 Planned 7-36
7.9 UNDERGROUND STORAGE TANK WASTE CHEMICAL CHARACTERISTICS . . 7-37
7.9.1 Inactive Underground Storage Tanks 7-37
7.9.2 Active Underground Storage Tanks 7-38
7.9.3 Waste Chemical Characterization Totals 7-39
7.10 UNDERGROUND STORAGE TANK WASTE RADIOLOGICAL CHARACTERISTICS 7-39
7.10.1 Inactive Underground Storage Tanks 7-39
7.10.2 Active Underground Storage Tanks 7-39
7.10.3 Waste Radiological Characterization Totals 7-41
7.11 FACILITIES FOR PROCESSING RETRIEVED TANK WASTE 7-41
7.11.1 Existing 7-41
7.11.2 Planned 7-41

CONTENTS (cont.)

7.12 SOIL AND GROUNDWATER CONTAMINATION 7-42
7.12.1 Leak Detection 7-42
7.13 REFERENCES 7-42

8.0 SAVANNAH RIVER SITE, SOUTH CAROLINA 8-1
8.1 SAVANNAH RIVER SITE INTRODUCTION AND HISTORY 8-1
8.2 SAVANNAH RIVER SITE DESCRIPTION 8-2
8.3 AMBIENT WEATHER AND CLIMATE CONDITIONS 8-11
8.3.1 Climate 8-11
8.3.2 Precipitation 8-11
8.3.3 Winds 8-12
8.3.4 Temperature 8-13
8.3.5 Humidity 8-13
8.4 GEOLOGICAL AND HYDROLOGICAL CONDITIONS 8-13
8.5 PROCESS HISTORY 8-14
8.5.1 Waste Concentration 8-14
8.6 UNDERGROUND STORAGE TANKS PHYSICAL CHARACTERISTICS 8-16
8.6.1 Type A Double-Shell Tanks 8-16
8.6.2 Type B Double-Shell Tanks 8-18
8.6.3 Type C Single-Shell Tanks 8-20
8.6.4 Type D Double-Shell Tanks 8-22
8.6.5 Tank Auxiliaries 8-25
8.7 UNDERGROUND STORAGE TANK WASTE PHYSICAL CHARACTERISTICS 8-25
8.7.1 Supernatant Description 8-26
8.7.2 Sludge Description 8-27
8.7.3 Salt Cake Description 8-27
8.7.4 High-Priority Waste Tank Safety Issues 8-27
8.8 WASTE CHARACTERIZATION CAPABILITIES 8-27
8.8.1 Waste Tank Inspection 8-27
8.8.2 Waste Characterization 8-28
8.9 UNDERGROUND STORAGE TANK WASTE CHEMICAL CHARACTERISTICS 8-28
8.10 UNDERGROUND STORAGE TANK RADIOLOGICAL CHARACTERISTICS 8-29
8.11 FACILITIES FOR PROCESSING RETRIEVED TANK WASTE 8-29
8.12 SOIL AND GROUNDWATER CONTAMINATION 8-30
8.13 REFERENCES 8-31

APPENDIXES

A HANFORD SITE A-1

B FERNALD ENVIRONMENTAL MANAGEMENT PROJECT B-1

C IDAHO NATIONAL ENGINEERING LABORATORY C-1

D OAK RIDGE NATIONAL LABORATORY D-1

E SAVANNAH RIVER SITE E-1

LIST OF FIGURES

1-1 Total Tank Volumes for the Five UST-ID Sites 1-2

1-2 Total Waste Volumes for the Five UST-ID Sites 1-2

1-3 Percent of Operating Capacity Filled with Waste for All Five DOE Sites 1-3

1-4 UST-ID Waste Relative Characteristics 1-6

2-1 UST-ID Program Office Organization 2-2

2-2 UST-ID Program Organization 2-3

3-1 Participant Site Locations 3-1

3-2 Relative Characteristics of Hanford Site Underground Storage Tanks 3-3

3-3 Relative Characteristics of FEMP Silos 3-4

3-4 Relative Characteristics of INEL Underground Storage Tanks 3-5

3-5 Relative Characteristics of ORNL Underground Storage Tanks 3-7

3-6 Relative Characteristics of SRS Underground Storage Tanks 3-8

4-1 Hanford Site Location 4-1

4-2 Hanford Site Map 4-4

4-3 Hanford Site Railroad Trackage 4-5

4-4 200 East Area Tank Farms 4-7

4-5 200 West Area Tank Farms 4-9

4-6 Hanford Geological Cross Section 4-14

4-7 Hanford Ferrocyanide Operations 4-19

4-8 Hanford Type A Single-Shell Tank 4-25

4-9 Hanford Type B Single-Shell Tank 4-26

4-10 Hanford Type C Single-Shell Tank 4-27

4-11 Hanford Type D1 Single-Shell Tank 4-28

4-12 Hanford Type D2 Single-Shell Tank 4-29

4-13 Hanford Type D3 Single-Shell Tank 4-30

LIST OF FIGURES (cont.)

4-14 Hanford Type E1 Double-Shell Tank 4-31
4-15 Hanford Type E2 Double-Shell Tank 4-32
4-16 Percent of Operating Capacity Filled with Waste 4-35
4-17 Treatment Operations for Hanford High-Level Waste 4-49
5-1 FEMP Site Location 5-1
5-2 FEMP Site Map 5-3
5-3 FEMP Silo Area 5-4
5-4 FEMP Buried Valley Aquifer 5-7
5-5 FEMP Site Geological Cross Section 5-8
5-6 FEMP Refinery Process Flow 5-10
5-7 FEMP Cold Raffinate Processing System 5-11
5-8 FEMP Hot Raffinate Processing System 5-13
5-9 K-65 Handling and Storage Process Flow Diagram 5-15
5-10 FEMP Type A Silo Design 5-19
5-11 FEMP Type B Silo Design 5-20
5-12 K-65 Silo Leachate Collection System 5-21
6-1 INEL Site Location 6-1
6-2 INEL Site Map 6-3
6-3 INEL Site Railroad Trackage 6-4
6-4 ICPP Area Map 6-7
6-5 ICPP Geological Cross Section 6-10
6-6 INEL Major Surface Drainages 6-11
6-7 ICPP Type A Tank 6-15
6-8 ICPP Type B1 Tank 6-16
6-9 ICPP Type B2 Tank 6-16
6-10 ICPP Waste Tank Riser Locations 6-18

LIST OF FIGURES (cont.)

6-11 Percentage of Operating Capacity Filled with Waste 6-20

6-12 Treatment Operations for ICPP HLLW 6-25

7-1 Oak Ridge Site Location 7-1

7-2 Oak Ridge Site Map 7-3

7-3 Oak Ridge National Laboratory 7-5

7-4 South Oak Ridge National Laboratory 7-6

7-5 Oak Ridge National Laboratory Main Plant Area 7-7

7-6 Oak Ridge Geological Cross Section 7-10

7-7 ORNL Liquid Low-Level Waste Concentration System 7-11

7-8 Oak Ridge Type D Tank 7-15

7-9 Oak Ridge Type E Tank 7-15

7-10 Oak Ridge Type L Tank 7-17

7-11 Oak Ridge Type M Tank 7-17

7-12 Oak Ridge Type N Tank 7-18

7-13 Oak Ridge Type K Tank 7-19

7-14 Oak Ridge Type A Tank 7-19

7-15 Oak Ridge Type B Tank 7-21

7-16 Oak Ridge Type C Tank 7-21

7-17 Oak Ridge Type G Tank 7-22

7-18 Oak Ridge Type F Tanks 7-22

7-19 Oak Ridge Type I Tank 7-23

7-20 Oak Ridge Type H Tank 7-23

7-21 Oak Ridge Type J Tank 7-24

7-22 Oak Ridge Type O1 and O2 Tank 7-29

7-23 Percent of Operating Capacity Filled with Waste 7-34

8-1 SRS Location 8-1

LIST OF FIGURES (cont.)

8-2 SRS Map 8-3

8-3 SRS Railroad Trackage 8-4

8-4 200-F Area Tank Farm 8-7

8-5 200-H Area Tank Farm 8-8

8-6 Savannah River Geological Cross Section (Davis et al. 1989) 8-15

8-7 Savannah River Type A Double-Shell Tank 8-17

8-8 Savannah River Type B Double-Shell Tank 8-19

8-9 Savannah River Type C Single-Shell Tank 8-21

8-10 Savannah River Type D Double-Shell Tank 8-23

8-11 Percent of Operating Capacity with Waste 8-26

8-12 Treatment Operations for Savannah River High-Level Waste 8-31

LIST OF TABLES

1-1 Minimum and Maximum Annual Weather Data From the Five UST-ID Sites 1-4

1-2 Typical Physical Descriptions of the Underground Storage Tank Waste at the Five Sites 1-5

1-3 Estimated Radionuclide Content for the Five UST-ID Storage Tank Sites 1-7

1-4 Estimated Tank Chemical Mass Totals for the Five UST-ID Sites 1-8

4-1 Tank Farm Groundwater Depth 4-15

4-2 Hanford Site High-Level Waste Storage Tank Farms 4-23

4-3 Hanford Tank Farm Waste Volumes (March 1992) 4-36

4-4 Unique Contents of Single-Shell Tanks 4-39

4-5 Flammable Gas Accumulation Tanks 4-40

4-6 Single-Shell Tanks Containing >1,000 Grams/Mole of Ferrocyanide . . 4-41

4-7 Tanks Containing Concentrations of Organic Salts ≥10% Total Organic Carbon 4-42

4-8 High-Heat Tanks with >40,000 Btu/h 4-42

4-9 Summary of Current Hot Cells at the Hanford Site 4-44

4-10 Hanford High-Level Waste Chemical Composition 4-45

4-11 Estimated Hanford Tank Chemical Mass Totals 4-47

4-12 Estimated Hanford Single-Shell Tank Radionuclide Content 4-48

4-13 Estimated Hanford Double-Shell Tank Radionuclide Content 4-48

4-14 Single-Shell Tank Failure Information 4-50

5-1 Analysis of Typical Uranium Concentrates 5-9

5-2 Estimated FEMP Silo Chemical Mass Totals 5-24

5-3 FEMP Silo Waste Radiological Composition (pCi/g) 5-25

5-4 Estimated FEMP Silo Radionuclide Content 5-25

6-1 Calcined Solids Inventory at the INEL 6-14

6-2 Typical Chemical Composition of Sodium Blend Calcine 6-14

6-3 Characteristics of Various Tank Liquid Monitoring Systems at ICPP 6-19

6-4 ICPP Tank Waste Types and Volumes 6-20

6-5 ICPP High-Level Waste Chemical Compositions (wt%) 6-21

6-6 Estimated ICPP Tank Chemical Mass Totals 6-22

6-7 ICPP High-Level Waste Radionuclide Composition (mCi/L) 6-23

6-8 Estimated ICPP Tank Radionuclide Content 6-23

6-9 Estimated HLLW ICPP Radiation Levels 6-23

7-1 Group 1 Inactive Tanks (Gunite) 7-14

7-2 Group 2 Inactive Tanks (Old Hydrofracture Facility) 7-16

7-3 Group 3 Inactive Tanks 7-18

7-4 Group 4 Inactive Tanks 7-24

7-5 Group 5 Inactive Tanks 7-25

LIST OF TABLES (cont.)

7-6 Group 6 Inactive Tanks 7-26
7-7 Fission Products Development Active Tanks 7-28
7-8 LLLW Evaporator Active Tanks 7-28
7-9 Radiochemical Engineering Development Center Active Tanks 7-29
7-10 High Radiation Level Examination Laboratory Active Tanks 7-30
7-11 HFIR Active Tanks 7-30
7-12 Miscellaneous Facility Active Tanks 7-31
7-13 ORNL Inactive Tank Waste Volumes 7-35
7-14 ORNL Active Tank Waste Volumes 7-36
7-15 Estimated ORNL Tank Chemical Mass Totals 7-40
7-16 Estimated ORNL Tank Radionuclide Content 7-41
7-17 ORNL Tanks Identified as Leakers 7-42
8-1 SRS Type D Underground Storage Tank Construction History 8-22
8-2 SRS Type D Underground Storage Tank Plate Thicknesses 8-23
8-3 Savannah River Tank Farm Waste Volumes 8-26
8-4 Savannah River High-Level Waste Compositions 8-28
8-5 Estimated Savannah River Tank Chemical Mass Totals 8-29
8-6 Estimated Savannah River Tank Radionuclide Content 8-30

LIST OF TERMS

AEC	U.S. Atomic Energy Commission
ASTM	American Society for Testing and Materials
$BiPO_4$	bismuth phosphate (Hanford)
CFA	Central Facilities Area (Idaho Falls)
DOE	U.S. Department of Energy
DST	double-shell tank
DWPF	Defense Waste Processing Facility (Savannah River)
EPA	U.S. Environmental Protection Agency
FEMP	Fernald Environmental Management Project
FFTF	Fast Flux Text Facility (Hanford)
HEPA	high-efficiency particulate air (filter)
HFIR	High Flux Isotope Reactor (Oak Ridge)
HLLW	high-level liquid waste
HLW	high-level waste
HNO_3	Nitric Acid
HRE	Homogenous Reactor Experiment
ICPP	Idaho Chemical Processing Plant (Idaho Falls)
INEL	Idaho National Engineering Laboratory
LLLW	low-level liquid waste
LLW	low-level waste
MCW	Mallinckrodt Chemical Works (Fernald)
NPH	normal paraffin hydrocarbon
NWCF	New Waste Calcining Facility (Idaho Falls)
ORGDP	Oak Ridge Gaseous Diffusion Plant
ORNL	Oak Ridge National Laboratory
PEW	Process Equipment Waste (Idaho Falls)
PFP	Plutonium Finishing Plant (Hanford)
PUREX	plutonium-uranium extraction (Hanford and Savannah River)
RCRA	*Resource Conservation and Recovery Act of 1976*
REDC	Radiochemical Engineering Development Center
REDOX	reduction oxidation (Hanford)
SRS	Savannah River Site
SST	single-shell tank
TBP	tributyl phosphate
TRAC	track radionuclide components
Tri-Cities	Richland, Kennewick, and Pasco, Washington
Tri-Party Agreement	*Hanford Federal Facility Agreement and Consent Order*
TRU	transuranic
UST	underground storage tank
UST-ID	Underground Storage Tank - Integrated Demonstration
WNP	Washington Nuclear Plant

This page intentionally left blank.

ACKNOWLEDGEMENTS

Westinghouse Hanford Company and Bovay Northwest, Inc. acknowledge the following people whose time and expertise made the production of this document possible: Ted Evans, EG&G; Eric Mulkey, Oak Ridge National Laboratory; Don Herman and Ray Kato, Westinghouse Environmental Management Company of Ohio; Cathy Golberg, Bruce Higley, Julian Hill, and Leela Sasaki, Westinghouse Hanford Company; Bret Griebenow, D. C. Machovec, and Dennis A. Schmidt, Westinghouse Idaho Nuclear Company; Mike Chandler, Donny Helton, Mike Scaggs, and Gary Street, Westinghouse Savannah River Company.

This page intentionally left blank.

UNDERGROUND STORAGE TANK - INTEGRATED DEMONSTRATION PARTICIPANT SITE CHARACTERISTIC SUMMARY

1.0 INTRODUCTION

This section summarizes the general environment and conditions of underground storage tanks (UST) at the five Underground Storage Tank - Integrated Demonstration (UST-ID) participant sites (Hanford Site, Idaho National Engineering Laboratory [INEL], Fernald Environmental Management Project [FEMP], Oak Ridge National Laboratory [ORNL], and Savannah River Site [SRS]). The discussion provides emphasis on extremes and bounding conditions in which technologies must function if implemented.

1.1 SITE OVERVIEW

The UST-ID participant sites are located in the northwest, mideast, and southeast part of the United States. They range in size from 4.3 to 2,315 km^2 (1.6 to 894 mi^2) for the FEMP and INEL, respectively. The five sites are located in rural areas of the country. They are operated by management and operating contractors who employ between 1,400 (FEMP) and 18,000 (SRS) employees. The sites are highly diverse in geological and meteorological conditions.

The USTs and the wastes within them vary significantly depending on the site missions and process histories. Figures 1-1 and 1-2 show the total UST capacities and total waste for each of the five sites, respectively. Figure 1-3 shows the waste volumes relative to tank capacities of all the 334 USTs covered in this document.

1.1.1 History and Missions

All five sites began operating between 1943 and the early 1950's. They have primarily supported special nuclear materials production (e.g., enriched uranium, plutonium, tritium), refinement operations, and research programs as part of the development of nuclear weapons during, and subsequent to, World War II. Most of the site missions have evolved from weapons production into peaceful uses of nuclear power, research and development, and environmental cleanup programs.

A variety of processes have been used for the production of nuclear materials at these sites. The UST waste has resulted from the processes used to separate nuclear fuel from other components. The waste is a mixture of the separation chemicals used in the processes and the fission and subsequent decay products generated in the initial production step. Early separation processes generated large amounts of waste per ton of product (64.5 m^3/ton [117,000 gal/ton]).

Figure 1-1. Total Tank Volumes for the Five UST-ID Sites.

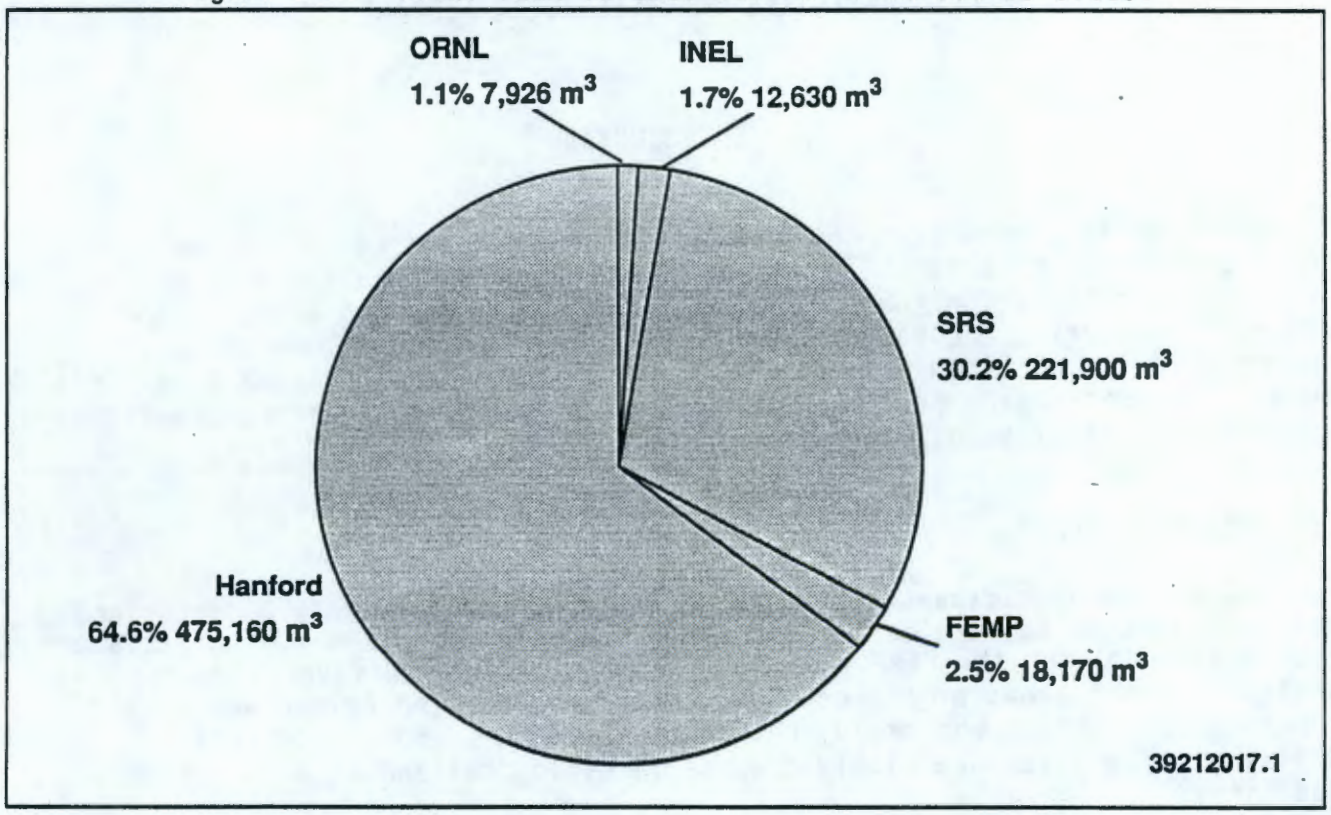

Figure 1-2. Total Waste Volumes for the Five UST-ID Sites.

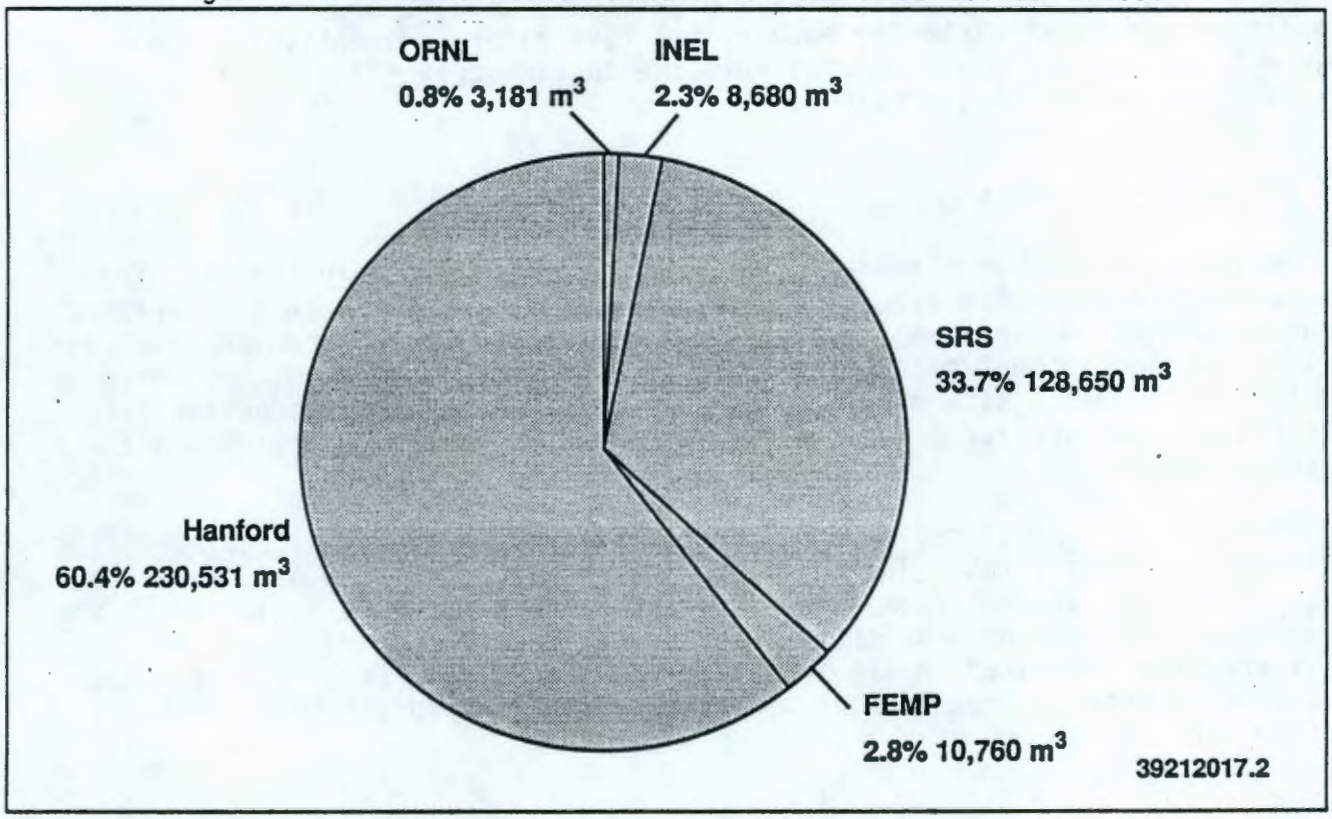

Figure 1-3. Percent of Operating Capacity Filled with Waste for All Five DOE Sites.

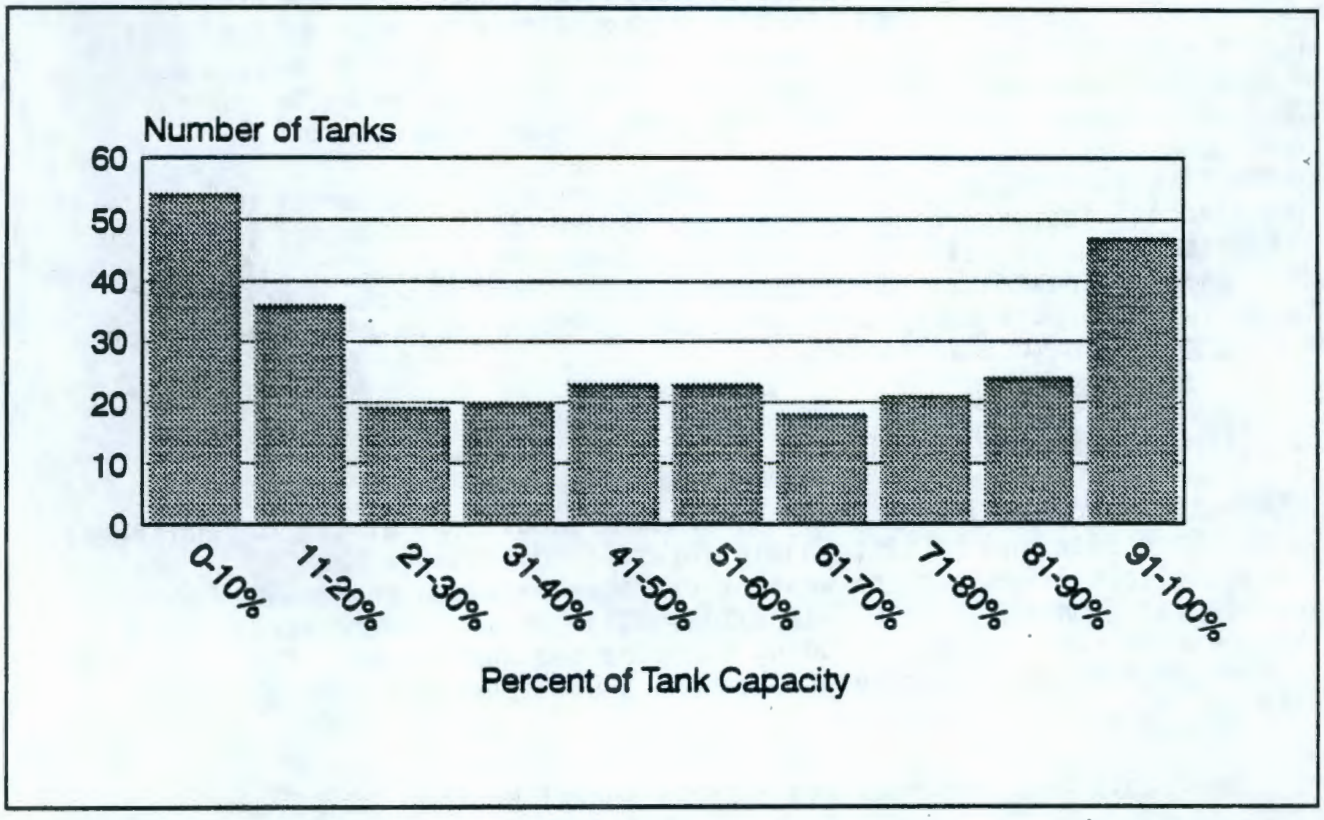

Modern processes, such as the plutonium-uranium extraction (PUREX) process, generate relatively small amounts of waste per ton of product (1.14 m^3/ton [300 gal/ton]). In fact, a primary factor in the design of more modern chemical processes was waste minimization.

Due largely to the decline in defense spending and the implementations of federal facility agreements, emphasis of the U.S. Department of Energy (DOE) complex is currently on environmental cleanup.

The UST wastes are currently being characterized for physical, chemical, and radiological properties. The tanks are also remotely monitored for waste temperature, heat output, radiation levels, etc. They are measured using in situ technologies such as thermocouple trees and different types of level indicators. Visual inspection of the waste from the interior of the tank is accomplished by a variety of still and motion cameras, which are lowered into the tank through risers, or through periscopes lowered into the tank headspace.

Physical, chemical, and radiological properties are primarily determined by analysis of waste samples in laboratory "hot cells." Hot cells are specially shielded rooms with manipulators that are used for preparation and analysis of tank waste samples. Waste samples are gathered by various methods based on the waste characteristics. Liquid samples can be recovered relatively easily, while solid or semisolid waste recovery requires core

samples to be taken. All of the UST waste is radioactive (some exceeding 10,000 R/h within the USTs); therefore, personnel handling precautions must be taken. Precautions range from limiting exposure time to keeping the samples in lead-lined containers for extraction in hot cells. Some work also has been done with computer and synthetic waste modeling using known waste chemistry, process and transfer records, and radioactive decay properties.

The five participant sites are currently engaged in a number of baseline planning activities regarding remediation of the tanks and waste. The basic strategy common to all sites is a five-step process: (1) retrieval, (2) waste separation, (3) treatment, (4) disposal, and (5) tank closure. Actions to achieve closure of the empty tank structures (following retrieval) have not been determined in most instances.

1.1.2 Climate/Weather Conditions

Climatic conditions vary from arid desert conditions at the two northwest sites (Hanford Site and INEL) to humid forest conditions at the SRS in the southeast. Table 1-1 shows the weather extremes based on the annual weather data collected from the five UST-ID sites. The SRS is exposed occasionally to violent weather conditions, including tornados and hurricanes. The other four sites are geographically more protected and thus experience minimal violent weather activity.

Table 1-1. Minimum and Maximum Annual Weather Data From the Five UST-ID Sites.

Condition	Data
Rainfall	15.9 to 114 cm (6.25 to 45 in.)
Temperature	-17.8 to >37.8 °C (0 to >100 °F)
Wind	8.1 to >49.9 km/h (5 to >31 mi/h)
Humidity	10 to 90% relative

1.2 TANK AND WASTE INVENTORY AND CONDITIONS

The 334 USTs that are within the intended scope of the UST-ID Program have a total capacity of 735,786 m^3 (194.4 Mgal). Over 94.8% of this capacity is located at the Hanford Site (64.6%) and the SRS (30.2%). The USTs range in size from 0.114 to 4,920 m^3 (30 gal to 1.3 Mgal), with an average capacity of 2,270 m^3 (600,000 gal). The USTs generally have flat bottoms and domed overheads that are 0.91 to 2.4 m (3 to 8 ft) below grade and are constructed of a variety of materials: reinforced concrete, gunite, and carbon and stainless steel. Two containment designs have been used in the design of the USTs: (1) a reinforced concrete shell with usually one or two carbon or stainless steel liners (single-shell tanks [SST] and double-shell tanks [DST], respectively), and (2) a metal tank (carbon or stainless steel) in a reinforced concrete underground vault. The first design was used at the Hanford Site, FEMP, and SRS; the second design was used primarily at the INEL. Both designs are represented at the ORNL.

Access to the USTs is achieved through vertical access ports called "risers." More recently constructed tanks have several risers for tank instrumentation and waste sampling. Older tanks have fewer risers, which restrict access to the tank waste. Some tanks at the ORNL have access only via underground process piping. Risers on DOE USTs range in size from 10.2 to 107 cm (4 to 42 in.). Most of the existing risers are already being used for temperature monitoring, level indication, etc. Void spaces above the maximum operational waste height for the USTs vary from 0.33 to 3.6 m (1 to 12 ft).

1.2.1 Tank Waste Characteristics

Approximately 381,802 m^3 (100.9 Mgal) of waste are stored in the USTs at the five sites. The tanks at the Hanford Site and the SRS contain most of the waste, 60.4% and 33.7%, respectively. Based on the total waste inventory versus the total capacity, the average level of the tanks is approximately 52%. Actual waste levels range from empty to over 99% of the operating capacities. Figure 1-4 shows a composite of the physical, chemical and radiological characteristics for all the DOE USTs covered within this document.*

1.2.1.1 Physical. The waste has five general physical forms: liquid (supernatant for Hanford, SRS, and ORNL), sludge, slurry, salt cake, and dry powder. Liquid waste at the five sites has two forms, acidic and alkaline. Acidic liquid wastes at the INEL and ORNL contain large concentrations of nitrate and sulfate anions and small concentrations of dissolved metals. Alkaline waste or "supernatant" at the Hanford Site, SRS, and ORNL primarily contains nitrate and nitrite salts and soluble radionuclides such as ^{137}Cs. In general, sludge contains the insoluble components of the waste, primarily metal oxides, hydroxides, and insoluble radionuclides such as ^{90}Sr; it has a consistency ranging from a thick mud to a dry-hard substance. Slurry is a mixture of sludge and supernatant and has a consistency of thick soup. Salt cake is the result of the evaporation of supernatant, and although it has a similar chemical composition, its consistency is usually hard and crusty. Dry powder waste consists of dried metal oxides and is characteristic of the waste in only one tank at FEMP. Most of the waste (97%) is evenly distributed between the supernatant, sludge, and salt cake waste types. Waste physical descriptions vary widely from site to site. Table 1-2 provides the ranges for certain key parameters.

Table 1-2. Typical Physical Descriptions of the Underground Storage Tank Waste at the Five Sites.

Condition	Data
Temperature	Near ambient to >93 °C (200 °F).
Density	1.1 to 2.1 g/cm^3 (9.1 to 17.1 lb/gal)
Water percentage	Nearly dry to >70%
Heat output	None to >150 W/ton (500 Btu/h/ton)

*Chemical and radiological pie charts in Sections 1 and 3 are partial listings. Chemicals and radiological isotopes with miniscule amounts are grouped within "Others" for clarity.

Figure 1-4. UST-ID Waste Relative Characteristics.*

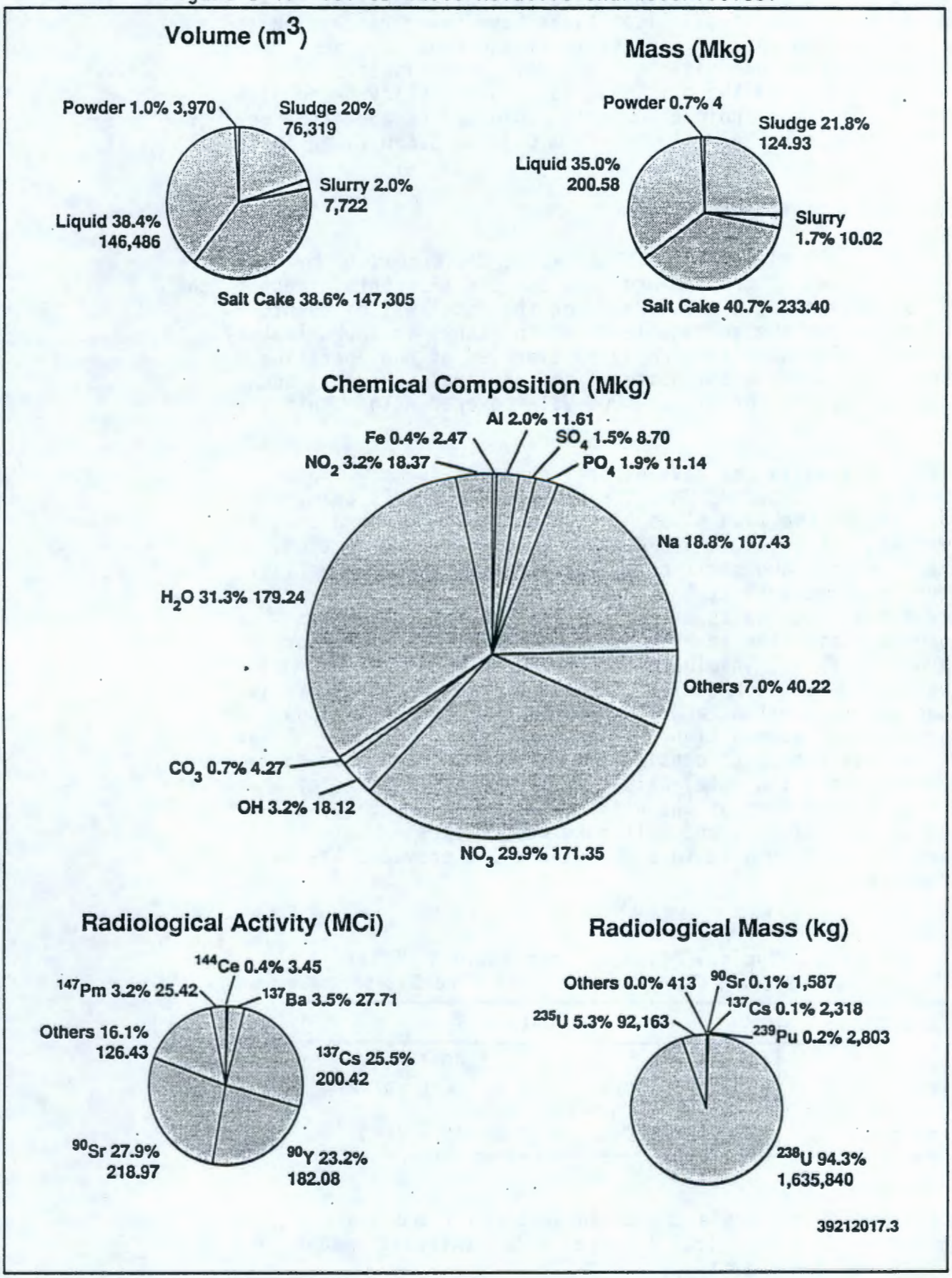

1.2.1.2 Chemical. Except for INEL and some ORNL wastes, which are acidic, most of the UST waste forms are alkaline. The waste contains a wide variety of hazardous and nonhazardous chemical components, including sodium salts, acids, metal oxides, and other heavy metals. Approximately half of the waste is composed of sodium nitrate and nitrites. There are also large amounts of metal oxides, especially iron and aluminum oxide. The ORNL waste is the most diverse because it is the product of various laboratory activities and pilot plant testing. The FEMP waste is largely composed of nonhazardous materials but still contains significant amounts of lead, magnesium, iron, calcium, and small amounts of arsenic, mercury, and other heavy metals. Table 1-3 lists the estimated total amounts of the different chemical types at the five DOE sites.

Table 1-3. Estimated Tank Chemical Mass Totals for the Five UST-ID Sites.

Component	Mass		Percent
	(kg)	(lb)	
CO_3^{-2}	4,268,170	9,410,010	0.7
Cl^-	120,520	265,670	0.0
F^-	272,700	601,140	0.0
OH^-	18,117,480	39,953,260	3.2
NO_3^-	171,348,200	377,686,400	29.9
NO_2^-	18,371,000	40,517,000	3.2
PO_4^{-3}	11,136,680	24,581,100	1.9
SO_4^{-2}	8,696,630	19,182,700	1.5
Al	11,606,630	25,588,360	2.0
Ba	35,067	77,313	0.0
Ca	939,810	2,069,730	0.2
Cr	583,311	1,293,796	0.1
Fe	2,471,538	5,453,950	0.4
Pb	287,067	630,588	0.1
Mg	300,800	661,030	0.1
Ni	332,281	732,413	0.1
K	111,780	246,450	0.0
Se	1,598	3,522	0.0
Si	19,000	41,888	0.0
Ag	170	372	0.0
Na	107,428,600	236,873,400	18.8
Others	36,882,300	81,307,560	6.4
Organics	331,870	731,730	0.1
H_2O	179,244,000	395,179,000	31.3
Total	572,907,202	1,263,088,382	100.0

1.2.1.3 Radiological. Tanks at the five sites contain approximately 784.5 MCi of radionuclides, with 68.6% and 26.7% being stored at the SRS and Hanford Site, respectively. The remaining 4.7% of the radionuclides are distributed at the other sites, primarily at INEL. There is a wide variety of radionuclides, ranging from transuranics (TRU) to fission products and their associated decay products. The TRUs are primarily ^{238}U, ^{235}U, and ^{239}Pu. The fission products are primarily ^{137}Cs and ^{90}Sr. Table 1-4 lists the total activity and mass of the radionuclides at the five DOE sites.

Table 1-4. Estimated Radionuclide Content for the Five UST-ID Storage Tank Sites.

Radionuclide	Activity	Mass	
	(Ci)	(kg)	(lb)
^{239}Pu	173,573	2,803.0	6,177.0
^{238}Pu	1,430	0.0	0.1
^{238}U	551	1,635,840.0	3,606,130.0
^{235}U	199	92,163.0	203,180.0
^{234}U	11	1.9	4.1
^{233}U	73	7.7	17.0
^{230}Th	410	21.0	48.0
^{226}Ra	810	0.8	1.8
^{210}Pb	980	0.0	0.0
^{147}Pm	25,420,600	26.0	58.0
^{144}Ce	3,453,414	1.1	2.4
^{137}Ba	27,710,000	0.0	0.0
^{137}Cs	200,416,290	2,318.0	5,110.0
^{90}Sr	218,969,620	1,587.0	3,498.0
^{90}Y	182,080,000	0.3	0.7
Others	126,253,000	354.0	781.0
Totals	784,480,362	1,735,123.8	3,825,008.1

1.2.2 Tank Void Space Conditions

Tank void spaces vary from large tank domes at the Hanford Site and FEMP to practically none for some of the ORNL USTs. The Hanford Site USTs have domes that are typically 3.6 m (12 ft) high and 22.7 m (75 ft) in diameter. The operating height of the tanks is generally 1 m (3.3 ft) below the top of the side wall. The SRS USTs have a flat top, and the operating height ends approximately 2 m (6.6 ft) below the ceiling of the tanks.

1.2.2.1 **Physical.** Physical characteristics of the void spaces for the participant site USTs are summarized as follows:

- Temperature--Near waste surface temperature. Most of the USTs are equipped with thermocouple trees which give a temperature profile from top to bottom of the tank.

- Pressure--Near ambient pressures. None of the tanks are pressurized. (Pressures vary slightly depending upon atmospheric conditions.)

- Humidity--The void space humidities are near the saturation point for water in air for the given void temperature.

1.2.2.2 **Chemical.** The void space contains small concentrations of many volatile chemicals or gases present in the waste. Because the tanks are vented to the atmosphere through filters, the concentration should remain quite small. Some of the Hanford Site UST waste produces hydrogen and nitrous oxide gases due to the radiolytic decomposition of the organic and inorganic components of the waste. These gases accumulate in the void space until vented to the atmosphere. For one of these tanks (101-SY), the concentration periodically reaches the lower explosive limit for one or both of the two gases. Peak hydrogen concentrations in the ventilation header have been measured in the range from 0.02% to 4.7% in five recent events (April 1990, August 1990, October 1990, February 1991, and May 1991) (Wilson 1991). Special precautions are taken to prevent the ignition of this potentially explosive mixture and to safely vent the gases.

1.2.2.3 **Radiological.** For the Hanford Site and SRS, radiation fields over the waste surface can exceed 1,000 R/h. Some USTs at these sites have radiation fields exceeding 10,000 R/h. The INEL and ORNL waste has less radiological activity and generally does not exceed 100 R/h over the surface of the wastes. The FEMP waste is similar in activity to uranium mine tailings.

Due to the presence of these high radiation fields in some USTs, instrumentation frequently fails, especially in electronic packages. As a result, backup electronic instrumentation is frequently provided.

1.3 TANK EXTERIOR AND NEAR-FIELD CONDITIONS

The soil to tank/vault interface of the USTs described by this document is a reinforced concrete or steel wall/barrier. The tanks were constructed by excavation of a large pit. After the tank construction was complete, excavated soil was backfilled over the tanks to provide the necessary shielding. The following sections describe tank leakage to the surrounding soils and the overall geology of the sites.

1.3.1 Leakage

Seventy-nine tanks at the five sites have (or are assumed to have) leaked waste to the surrounding environment. Of these tanks, 66 are at the Hanford Site, 1 is at the SRS, and 12 are at the ORNL. The Hanford Site USTs have

leaked approximately 3,419 m^3 (0.9 Mgal) of waste containing estimates of up to 1,147 kCi of radionuclides. The amount of waste leakage from the 13 tanks at the ORNL and SRS is not currently known.

Waste that has leaked from the 66 known or suspected leaking Hanford Site tanks has been absorbed mostly by the nearby surrounding soil. This is due to the lack of a driving source to cause migration (less than 5% soil moisture and semi-arid precipitation conditions). The waste has most probably leaked at the tank knuckles located at the bottom of the outside wall. The leaked waste has migrated in the soil both in a vertical and horizontal pattern. Assuming the soil under the USTs has an average soil moisture of 5%, and based on the total volume of leaked waste (see Table 4-14), an estimated 68,350 m^3 (18.1 Mgal) of soil is contaminated with leaked tank waste.

A number of documents are available that provide detailed information on Hanford Site UST leakage and its effects. See the reference section in Appendix H of the *Tank Farm Surveillance and Waste Status Summary Report for March 1992* (Hanlon 1992) for the Hanford Site references.

1.3.2 Overall Hydrology

Water tables vary from approximately 60.6 m (200 ft) for the Hanford Site and INEL, to approximately 12.1 m (40 ft) at the SRS. For one SRS tank farm, tank bottoms are below the water table during part of the year. Facilities at most of the sites occupy only a small percentage of the land area, with the majority of the land remaining largely undisturbed.

1.4 DOCUMENT ORGANIZATION

Section 1.0 summarizes the data presented in the document. Section 2.0 provides an overview of the UST-ID Program. Section 3.0 provides brief introductions to the five participant sites, as well as a brief description of the USTs and waste characteristics. Sections 4.0 through 8.0 present detailed information for Hanford Site, FEMP, INEL, ORNL, and SRS, respectively. Appendixes A through E are a compilation of UST and waste characteristics data in tables and spreadsheet form for each of the five sites.

1.5 REFERENCES

Hanlon, B. M., 1992, *Tank Farm Surveillance and Waste Status Report for March 1992*, WHC-EP-0182-48, Westinghouse Hanford Company, Richland, Washington.

Wilson, G. R., and I. E. Reep, 1991, *A Plan to Implement Remediation of Waste Tank Safety Issues at the Hanford Site*, WHC-EP-0422, Rev. 1, Westinghouse Hanford Company, Richland, Washington.

2.0 UNDERGROUND STORAGE TANK - INTEGRATED DEMONSTRATION PROGRAM OVERVIEW

The principal objective of the UST-ID Program is the demonstration and continued development of technologies suitable for the remediation of USTs. This is accomplished by selecting the most promising new technologies for demonstration, testing, and evaluation. The eventual objective is the transfer of new technologies as a system to full-scale remediation at the DOE complexes and sites in the private sector.

The Integrated Demonstration Coordinator (IDC) is responsible for overall coordination of the UST-ID Program under the direction of the host site DOE Technical Program Officer. Hanford is the host site for the program. Accordingly, the Integrated Demonstration Coordinator position is held by a Westinghouse Hanford Company employee, with the Technical Program Officer at the DOE Richland Field Office. A Program Planning Group (PPG) and a number of Technical Support Groups (TSG) have been assembled to provide support to the Integrated Demonstration Coordinator. The UST-ID Program Office organization is shown in Figure 2-1.

The PPG advises the IDC on the planning, technical direction, and coordination of the UST-ID Program. The PPG is composed of representatives from each participant site and is chaired by the IDC. The PPG functions as the technical oversight committee with the responsibility of advising the IDC on the overall direction of the program. The PPG makes recommendations for inclusion of new technologies into the program, defines and implements the technology filtering process, and develops the technology success criteria.

The TSGs are responsible for developing specific problem statements for each area of interest for solicitation of upcoming fiscal year Technical Task Plans. The TSGs review and evaluate the Technical Task Plans and make recommendations concerning their inclusion into the program. The TSGs also identify any technologies that warrant further research and development to support the UST-ID Program or the DOE Office of Technology Development Program.

The Principal Investigator has direct responsibility for conducting the technology development activities as defined in the approved Technical Task Plans. Contractor management responsibility rests with the cognizant Technical Program Manager. Direct DOE field office oversight and direction is provided by the cognizant Technical Program Officer.

The ultimate goal of the UST-ID Program is a "cradle-to-grave" technology development approach to achieve implementation of better/faster/cheaper/safer alternatives to the baseline identified by the DOE Environmental Restoration and DOE Waste Management programs. The overall relationship of the UST-ID Program to the DOE Environmental Restoration and DOE Waste Management complex is shown in Figure 2-2. The UST-ID's overall role is coordinating the primary contractor and laboratory Technology Development (EM-50) projects to

Figure 2-1. UST-ID Program Office Organization.

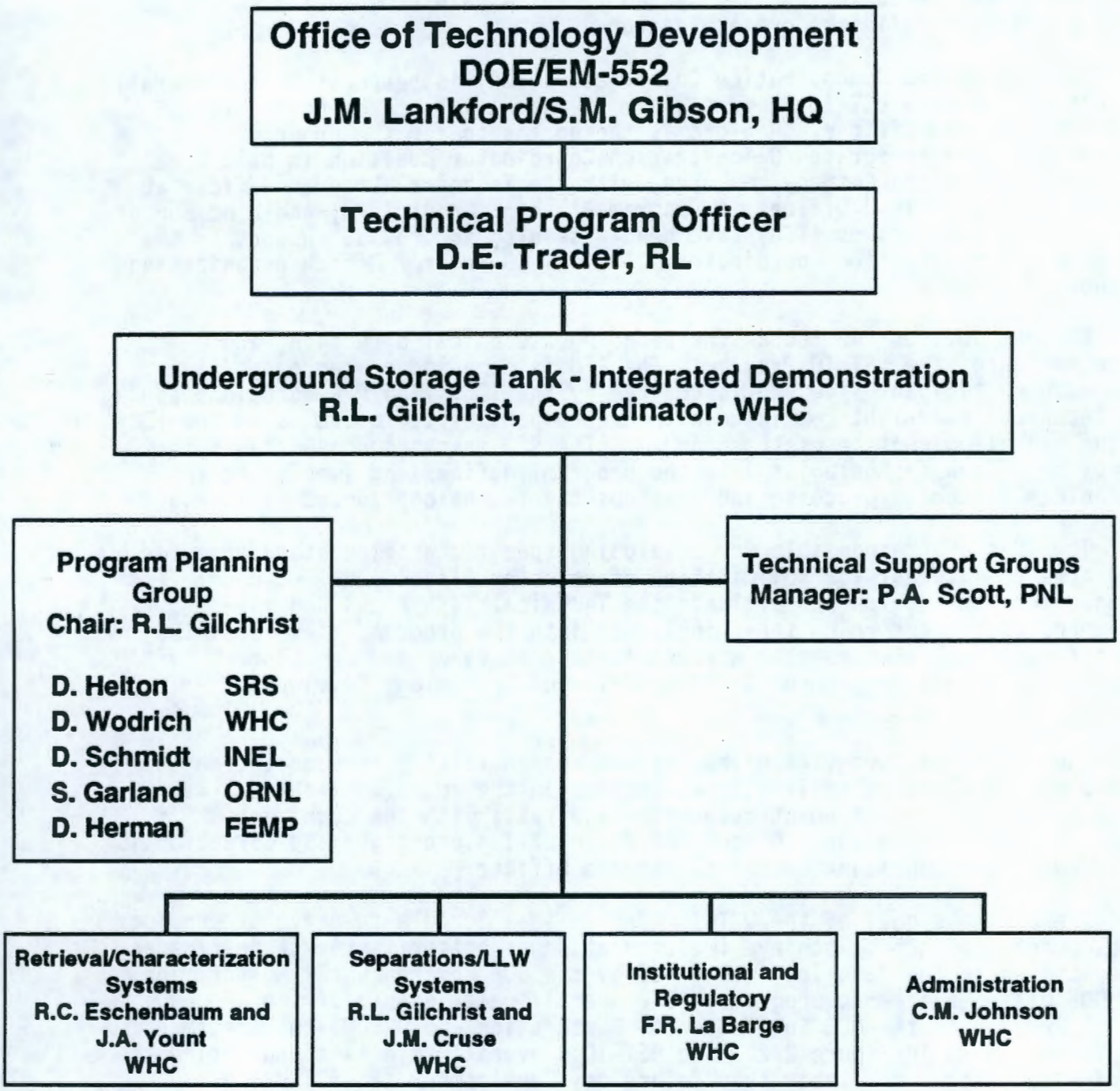

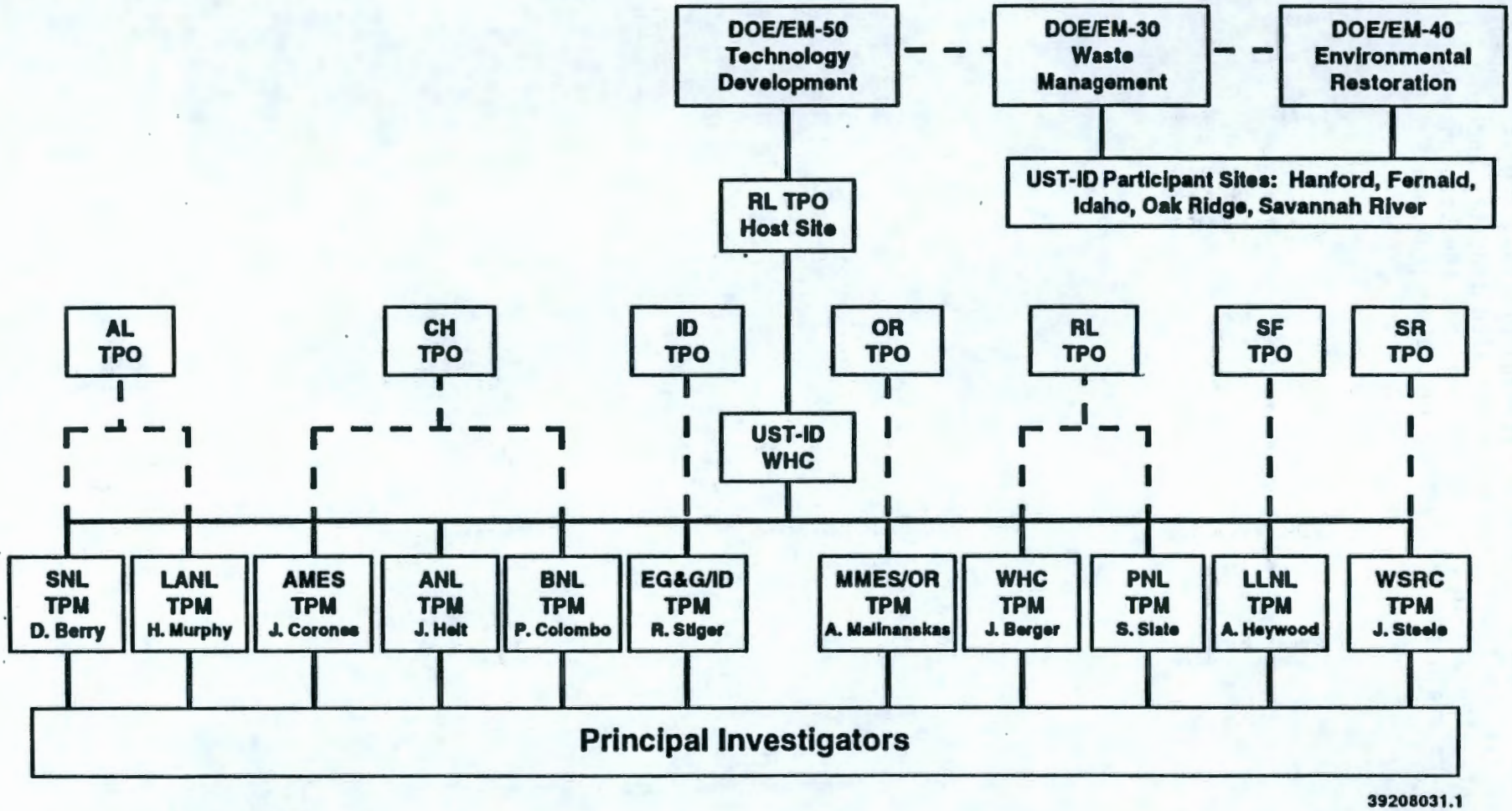

Figure 2-2. UST-ID Program Organization.

deliver the results through implementation in the operating DOE Environmental Restoration (EM-40) and DOE Waste Management (EM-30) Programs. With a span of multiple contractors, field offices, and the associated industry and university participants, the UST-ID Program ensures that the best possible technical approaches are evaluated and pursued in the program.

3.0 SUMMARY OF PARTICIPANT SITES

This section summarizes the five participant DOE sites and their respective USTs. The locations of the five sites are shown in Figure 3-1.

Figure 3-1. Participant Site Locations.

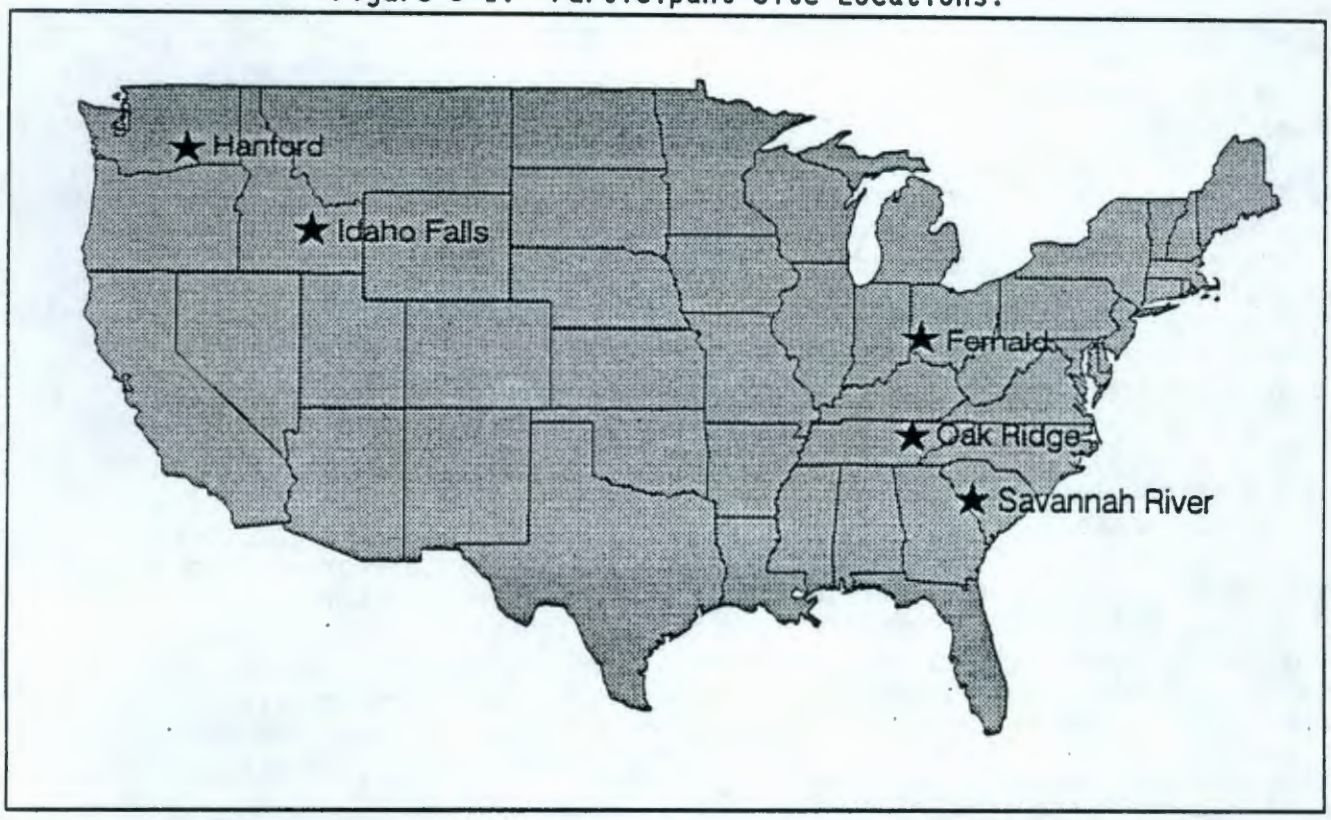

3.1 HANFORD SITE, WASHINGTON

The Hanford Site is located in the southeastern section of Washington State near the cities of Richland, Kennewick, and Pasco. It has operated since 1943 with a primary mission of producing plutonium isotopes. Plutonium was produced by irradiation of enriched uranium in nine nuclear reactors located along the Columbia River. The plutonium was then separated from the remaining uranium and fission products by chemical processes.

The waste generated from the different chemical separation processes has been stored in 177 USTs for future retrieval and treatment prior to final disposal. There are eight UST design types, ranging in age from 6 to 49 yr. Of the 177 USTs, 149 tanks (Types A, B, C, D1, D2, and D3) have a single carbon steel shell (SSTs) with a reinforced concrete shell. The remaining 28 USTs (Types E1 and E2) have dual carbon steel liners (DSTs). They range in operating capacities from 208 to 3,785 m^3 (0.05 to 1 Mgal). Approximately 230,531 m^3 (60.9 Mgal) of radioactive waste is stored in the USTs. The waste has four general physical forms: sludge, supernatant (liquid), salt cake, and slurry. All of the waste is alkaline with a large percentage of sodium

nitrate and nitrite salts and metal oxides. The principal radionuclides include ^{235}U, ^{238}U, ^{239}Pu, and the uranium fission products ^{90}Sr and ^{137}Cs, as well as their decay products. Figure 3-2 shows the relative physical, chemical, and radiological composition of the Hanford Site waste.

3.2 FERNALD ENVIRONMENTAL MANAGEMENT PROJECT, OHIO

The FEMP is located in southwestern Ohio, approximately 29 km (18 mi) northwest of Cincinnati and 13 km (8 mi) southwest of Hamilton, Ohio. The FEMP's main mission has been uranium ore refinement. It has been in operation since 1951.

Part of the waste generated by the uranium ore refinement process was sent to silos for storage. There were four silos built in two pairs. All four silos are 40 yr old, and each has an approximate capacity of 4,770 m^3 (1.2 Mgal). The silos are constructed of only reinforced concrete. Silos 1 and 2 were used for the storage of K-65 radium-bearing pitchblende residues formed as a by-product of uranium ore processing. A total of 6,790 m^3 (1.8 Mgal) of K-65 residue is held in both silos 1 and 2. The waste is in the form of a thick sludge and has a covering of bentonite to reduce the radon flux from the waste. Silo 3 holds 3,970 m^3 (1.05 Mgal) of metal oxides in the form of a dry powder. Silo 4 has never been used for waste storage, and it remains empty today. A total of 10,760 m^3 (2.8 Mgal) is contained in the three silos. The chemical constituents include magnesium, calcium, lead, barium, and large quantities of other non-hazardous compounds. The waste also includes quantities of heavy metals, including arsenic, chromium, lead, and selenium. The principal radionuclides include uranium, thorium, radium, and other decay products. Figure 3-3 shows the relative physical, chemical, and radiological components of the FEMP silos.

3.3 IDAHO NATIONAL ENGINEERING LABORATORY, IDAHO

The INEL, which started operations in 1949, is located in southeast Idaho near the city of Idaho Falls. Currently, INEL's primary mission is to furnish engineering services and products, principally for peacetime atomic-energy applications, nuclear safety research, defense programs, and advanced energy concepts. The INEL also reprocesses nuclear fuel in the Idaho Chemical Processing Plant (ICPP) and performs research and development for nuclear propulsion. The INEL has 11 USTs dedicated to storage of high-level waste (HLW) at the ICPP. This waste originates primarily from the ICPP processing of spent fuel rods. All 11 tanks are of a similar design: 17-m (50-ft) diameter with an approximate 1,136-m^3 (300,000-gal) capacity. The tanks, which range in age from 29 to 41 years, are constructed of stainless steel and are housed in three different types of concrete underground vaults for shielding and leak containment. Currently these tanks contain a total of 8,680 m^3 (2.3 Mgal) of waste. This waste is all liquid and is acidic. It is stored in these tanks until it can be transferred to a calcining facility to be transformed into dry pellets and stored in silos. The principal chemical constituents are nitric and hydrofluoric acid and dissolved metals. The principal radionuclides are ^{137}Cs and ^{90}Sr and smaller amounts of other fission products. Figure 3-4 shows the relative physical, chemical, and radiological components of the ICPP waste storage tanks.

Figure 3-2. Relative Characteristics of Hanford Site Underground Storage Tanks.

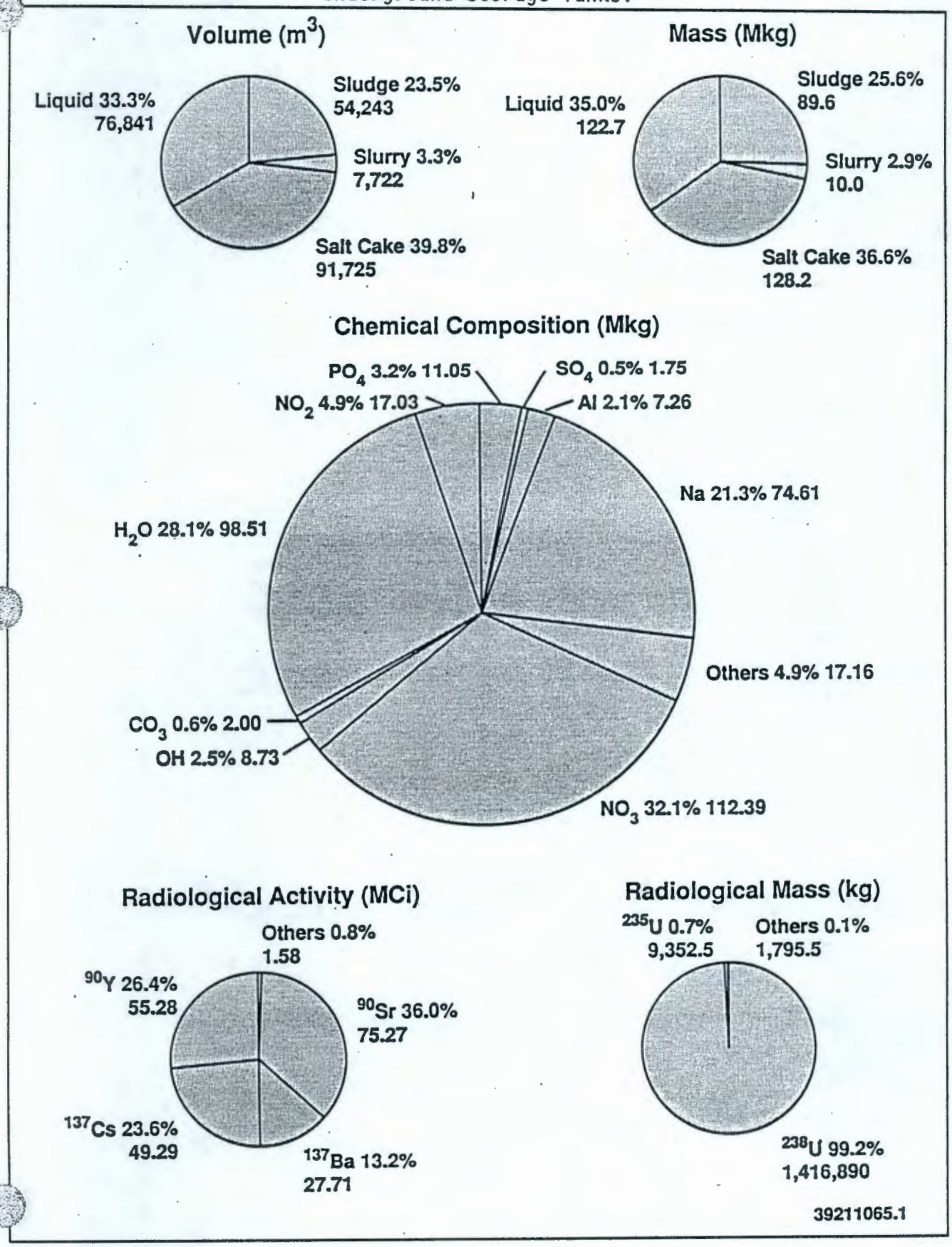

Figure 3-3. Relative Characteristics of FEMP Silos.

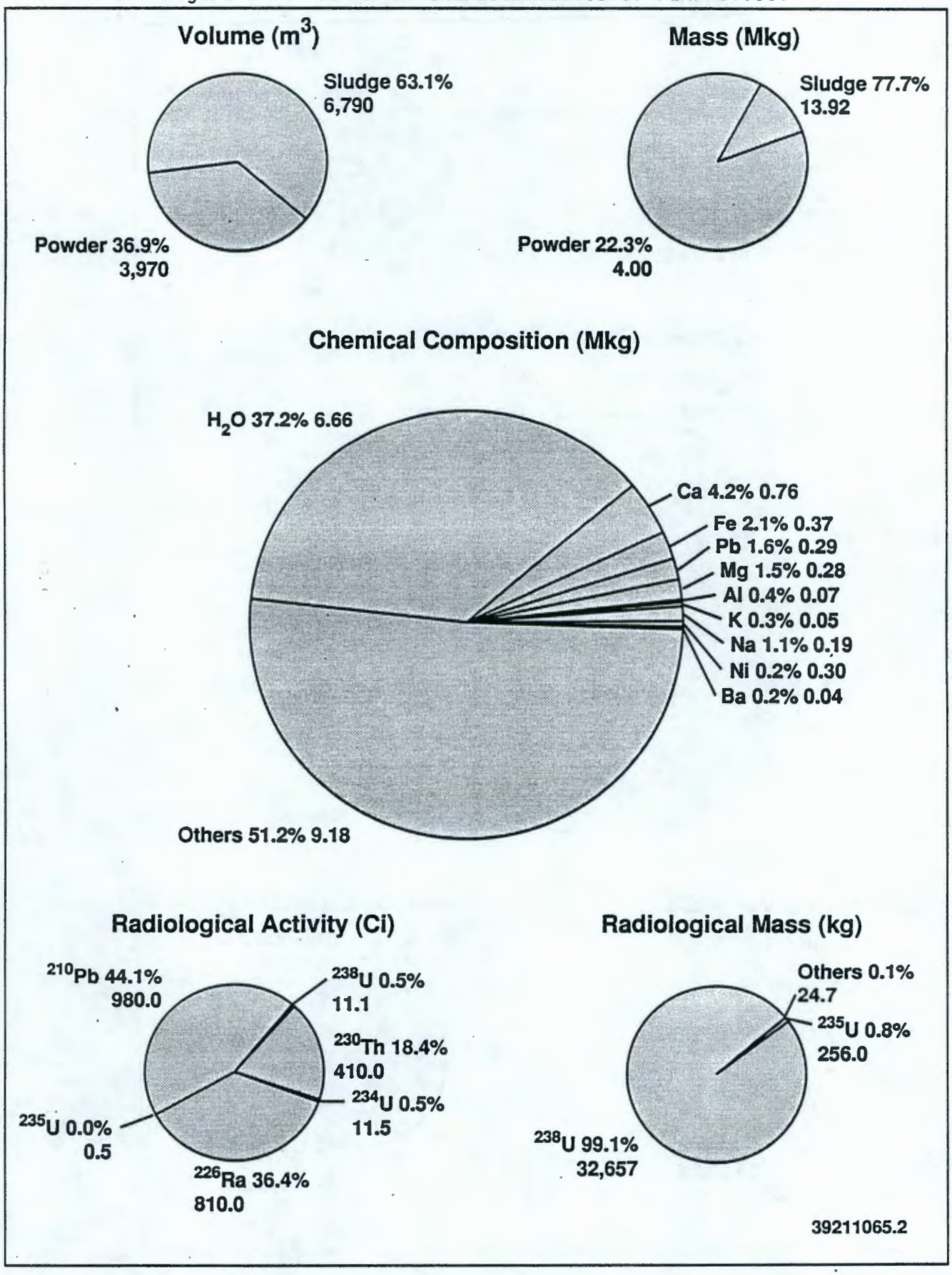

Figure 3-4. Relative Characteristics of INEL Underground Storage Tanks.

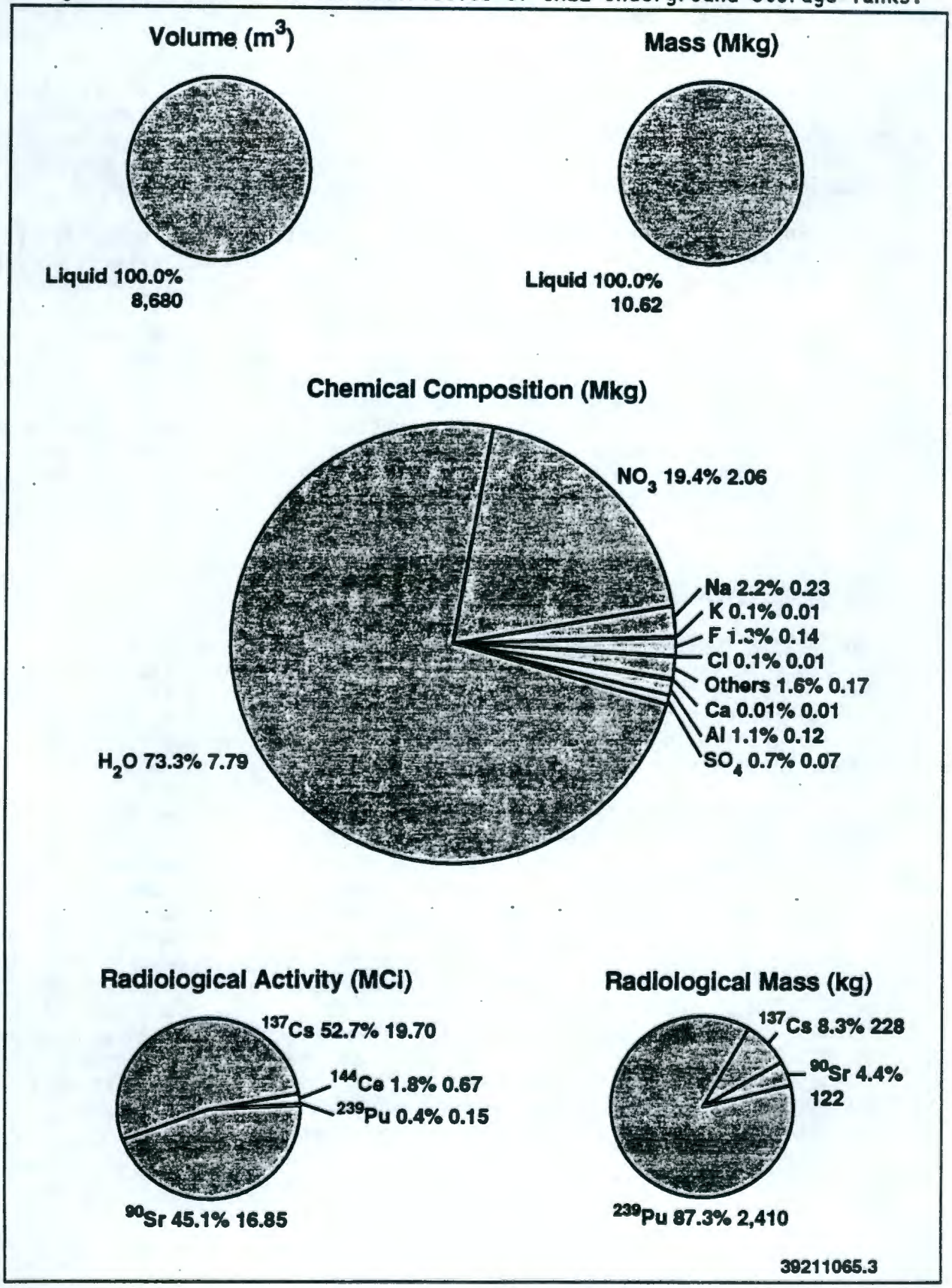

3.4 OAK RIDGE SITE, TENNESSEE

The Oak Ridge site is located in the eastern part of the state of Tennessee, and is part of the city of Oak Ridge, Tennessee. It has operated since 1943 for the primary purpose of nuclear research and enriched uranium production. There are three primary areas: the ORNL, the Oak Ridge Gaseous Diffusion Plant (ORGDP), and the Y-12 Plant. This document covers only the USTs storing radioactive waste located at the ORNL.

The ORNL produces waste from many different waste streams, primarily from laboratories and pilot plants. This waste has been sent to 91 USTs of varying design. Thirty-seven of these tanks are still active, while the remaining 54 tanks are no longer receiving waste. There are many types of USTs on the ORNL, ranging in capacities from 0.11 to 644 m^3 (30 to 170,000 gal) with a total capacity of 7,926 m^3 (2.09 Mgal) for the site. The USTs were constructed using stainless and carbon steel, gunite, and concrete. The tanks range in age from 11 to 49 yr. More than 3,181 m^3 (0.84 Mgal) of waste are currently being stored in the tanks. The physical, chemical, and radiological properties of the ORNL waste is complex and varied. However, most of the waste is considered low-level waste (LLW). Figure 3-5 shows the relative physical, chemical, and radiological components of the ORNL waste storage tanks.

3.5 SAVANNAH RIVER SITE, SOUTH CAROLINA

The SRS is located in southeastern South Carolina along the Georgia border, close to the cities of Aiken, South Carolina and Augusta, Georgia. It has operated since 1950 with a primary mission of producing plutonium, tritium, and other nuclear materials. Plutonium was produced by irradiation of enriched uranium in heavy water reactors. The plutonium and remaining enriched uranium were recovered using the PUREX process.

The HLW generated in the separation process has been stored in 51 USTs, ranging in capacities from 2,840 to 4,920 m^3 (0.75 to 1.3 Mgal). There are four design types: A, B, C, and D. Types A, B, and D are a double-shell design and type C is a single-shell design. The USTs range in age from 10 to 41 yr. The type D tanks are the most modern tanks and will eventually replace all of the other types. A total of 128,650 m^3 (34.0 Mgal) of waste is stored in the tanks. The SRS's waste is very similar to Hanford Site waste because both sites have used similar processes for the production and recovery of plutonium. The SRS waste has three physical forms: sludge, salt cake, and supernatant. The waste is alkaline with a large percentage of sodium nitrate and nitrite salts and metal oxides. The principal radionuclides include ^{238}U, ^{235}U, ^{239}Pu, and the uranium fission products ^{90}Sr and ^{137}Cs, as well as their decay products. Figure 3-6 shows the relative physical, chemical, and radiological components of the SRS waste storage tanks.

Figure 3-5. Relative Characteristics of ORR Underground Storage Tanks.

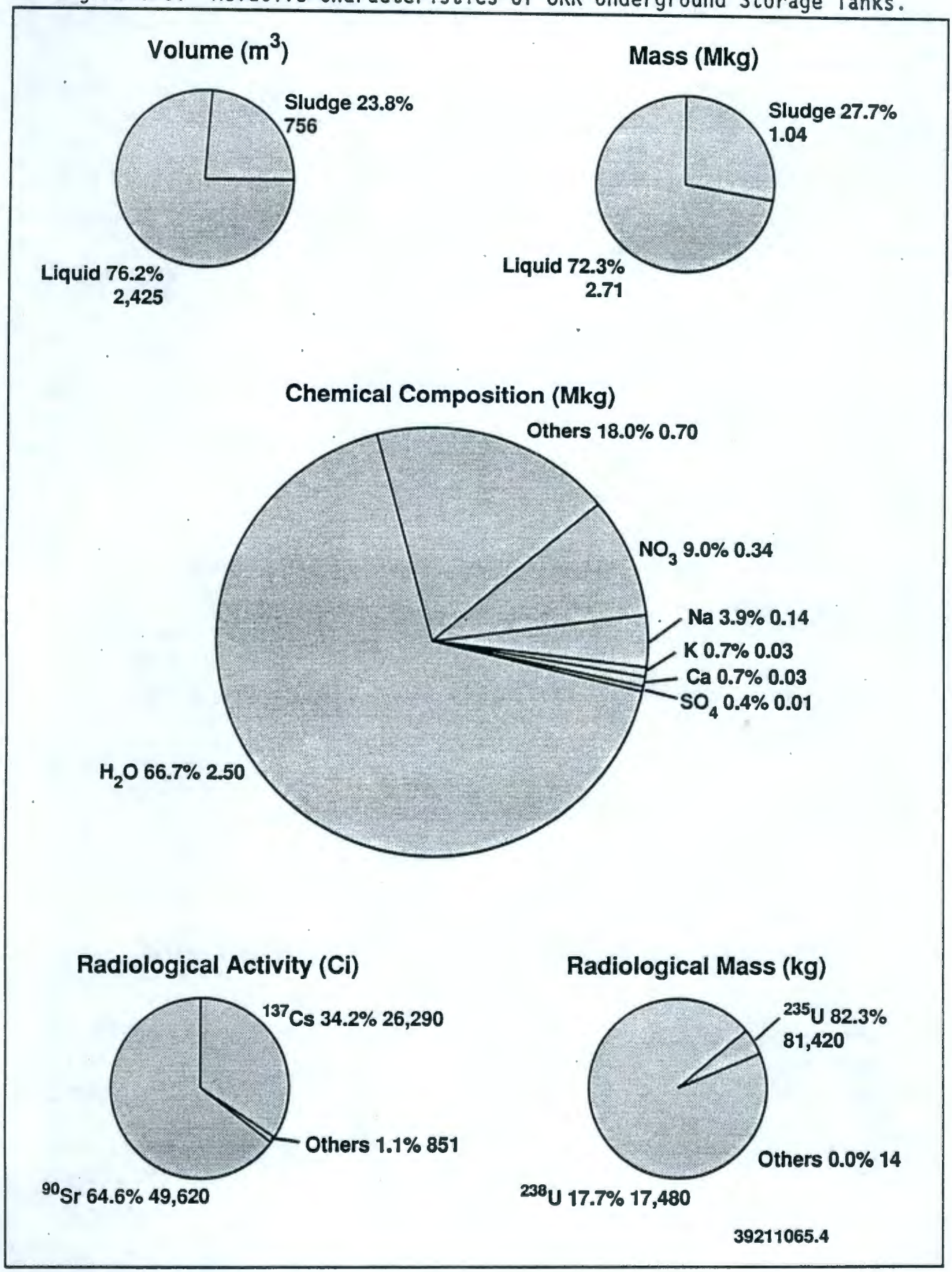

Figure 3-6. Relative Characteristics of SRS Underground Storage Tanks.

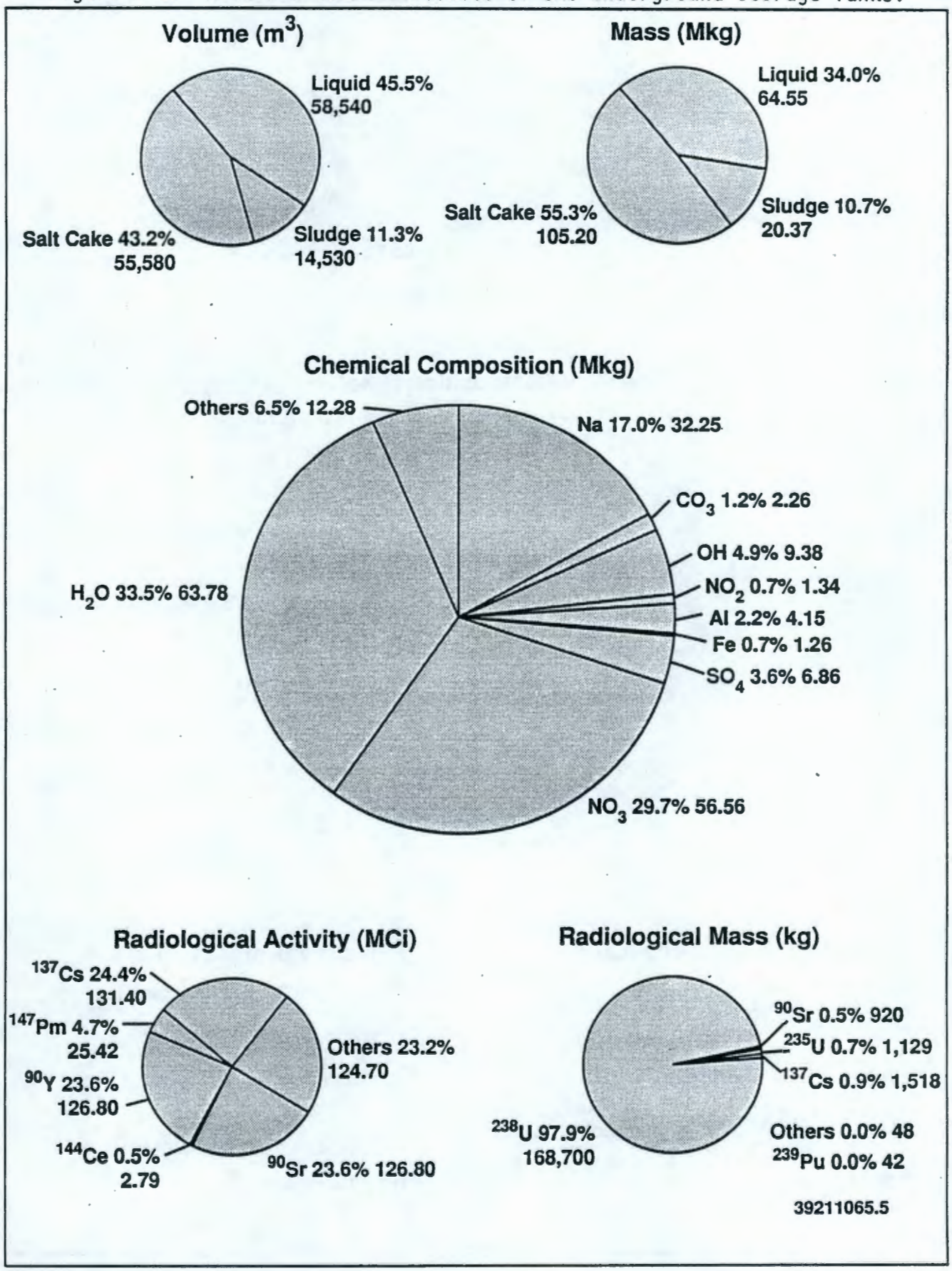

4.0 HANFORD SITE, WASHINGTON

This section provides a detailed description of the USTs at the Hanford Site in Richland, Washington. A general site description of the facilities, environmental conditions, fuel processing activities, and waste storage methods is provided. The information is based on referenced documents and interviews with Hanford Site personnel.

4.1 HANFORD SITE INTRODUCTION AND HISTORY

In January 1943, the Hanford Site (Figure 4-1) was chosen as one of the sites for the Manhattan Project. Hanford Site's preliminary mission was to produce weapons grade plutonium for use in atomic weapons for World War II. The Hanford Site was selected because it was remote, yet near railroads, had abundant water for reactor cooling, and had plentiful electricity from hydroelectric dams.

Figure 4-1. Hanford Site Location.

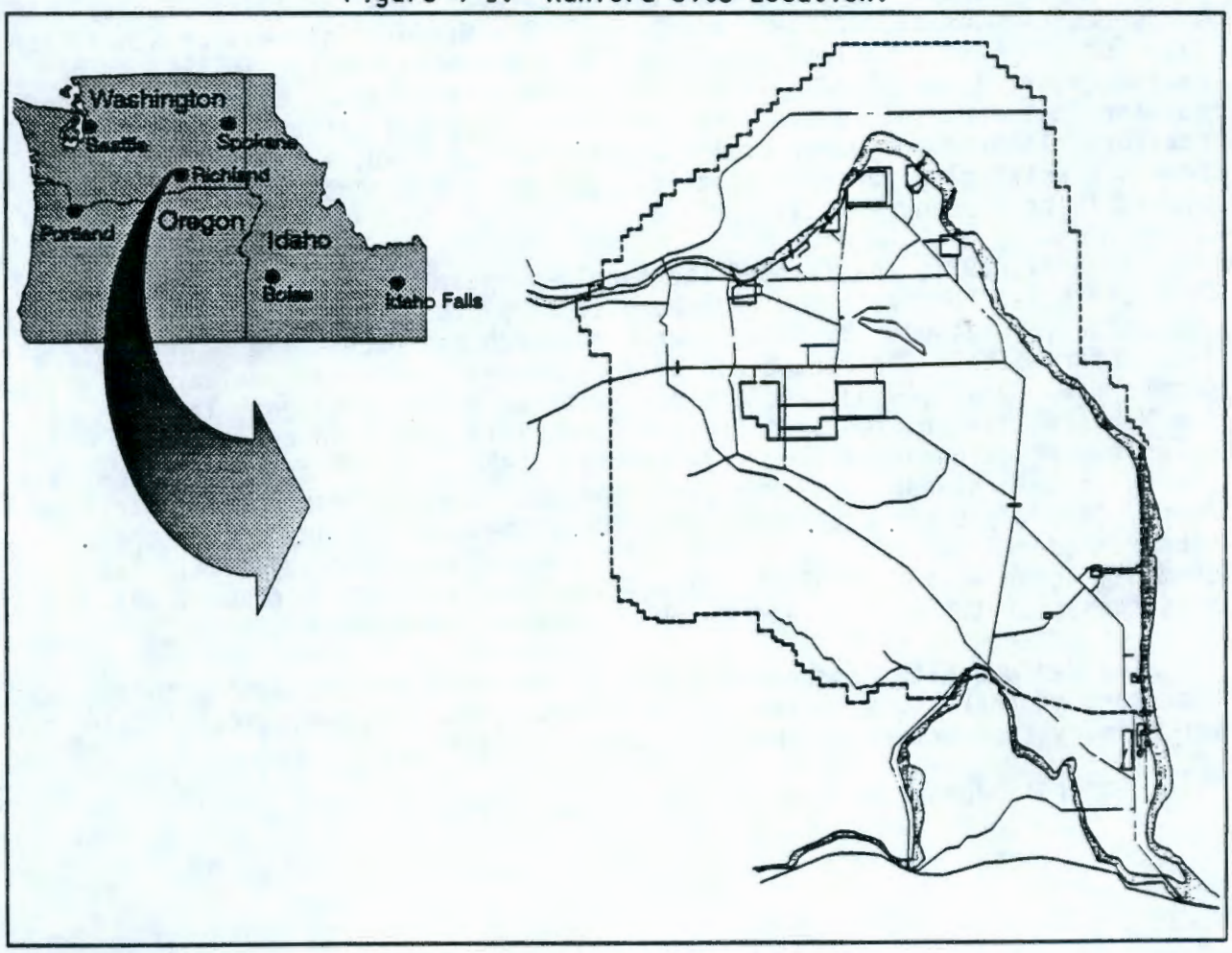

In the spring of 1943, 1,200 residents were relocated from an area encompassing 1,658 km^2 (640 mi^2), including the towns of Hanford, White

Bluffs, and Richland, so that construction could begin on the Hanford Site. Construction workers gathered from across America and lived in temporary camps.

The first three plutonium production reactors were built in 1943 on the banks of the Columbia River, 56 km (35 mi) north of Richland. Twenty-seven months after construction started, Hanford Site-produced plutonium provided the explosive charge for the world's first nuclear detonation in New Mexico. This first test was followed by the two nuclear weapons dropped on Hiroshima and Nagasaki, Japan. The Hiroshima bomb contained highly concentrated ^{235}U manufactured in Oak Ridge, Tennessee. The Nagasaki bomb was powered by concentrated plutonium manufactured at the Hanford Site.

Government demand for plutonium continued, and by 1964, nine plutonium production reactors were operating at the Hanford Site. The Hanford Site also housed facilities for uranium fuel processing, chemical recovery, purification of plutonium, waste management, and nuclear research.

In 1965, the Hanford Site began to diversify. Eight of the nine plutonium production reactors were closed between 1964 and 1971. Emphasis on the peaceful uses of nuclear power began. The Hanford Site was chosen as the site for the Fast Flux Test Facility (FFTF) advanced reactor in 1967. The reactor started operation in 1982 and is the most advanced and versatile test reactor in the world. Besides testing components and materials for advanced reactors, it produced beneficial isotopes such as ^{238}Pu, a material that powers electrical generators used for deep space missions. The FFTF was placed in cold standby in 1992.

In early 1971, the last of the single-purpose reactors was shut down. Only the N Reactor, with the dual purpose of plutonium and electricity production, remained. By 1975, energy research had become the major theme at the Hanford Site. The future use of such energy sources as nuclear, solar, geothermal, fossil, wind, and organic waste were investigated. The role of the Hanford Site shifted once again in the early 1980's to re-emphasize defense production activities. In February 1988, the N Reactor was ordered placed in cold standby. In May 1989, the DOE, U.S. Environmental Protection Agency (EPA), and the Washington State Department of Ecology signed the *Hanford Federal Facility Agreement and Consent Order* (Ecology et al. 1989), commonly known as the Tri-Party Agreement. The Tri-Party Agreement set milestones for the cleanup and final closure of the Hanford Site.

The Hanford Site has been operated by numerous private contractors since the start of operations in 1943. The following is a chronological listing of the primary contractors in charge of waste operations:

- E.I. duPont de Nemours and Company--1943 to 1947
- General Electric Company--1947 to 1965
- Atlantic Richfield Hanford Company--1965 to 1977
- Rockwell Hanford Company--1977 to 1987
- Westinghouse Hanford Company--1987 to Present.

4.2 HANFORD SITE DESCRIPTION

The Hanford Site is located in the semiarid part of southeastern Washington State and currently occupies 1,450 km^2 (560 mi^2) of land. It is bounded on the north and east by the Columbia River; on the west and southwest by the Rattlesnake Ridge; and on the south by the Yakima River. The site is northwest of the cities of Richland, Kennewick, and Pasco (Tri-Cities). Most of the Hanford Site workers live in the Tri-City area. Figure 4-2 shows the major roadways for the Hanford Site. Figure 4-3 shows standby, current, and planned railroad lines connecting the different Hanford Site areas.

The Hanford Site is divided into four primary regions or areas: 100, 200, 300, and 400. The 300 Area, located just north of the city of Richland, processed uranium into fuel capsules for the 100 Area production reactors. The fuel capsules were sent by railroad lines in special shielded containers to the 100 Area reactors for irradiation. Currently the area is used for energy and environmental research and development.

The 100 Area is located along the Columbia River in the northern portion of the site. Nine production reactors are located along the river: B, C, D, DR, F, H, KE, KW, and N. These are first-generation nuclear reactors (except for N Reactor, which is of a second-generation design) that used graphite as a moderator. Water from the river was used as the cooling medium. After completing the irradiation process, the fuel capsules were sent to the 200 Area by railroad for fuel recovery and purification. The first eight reactors discharged their primary cooling water to the river. The N Reactor used a closed primary cooling loop, which was also used to produce steam. The steam was used by the Washington Public Power Supply System to generate electricity (850 MWe). The last of the original eight reactors was shut down in 1971. The N Reactor was placed in cold standby in 1988.

The 200 East Area contains two process canyons: A Plant and B Plant. The A Plant houses the modern PUREX Facility. Six single-shell (A, AX, B, BX, BY, and C) and five double-shell (AN, AP, AW, AY, and AZ) tank farms are located in the 200 East Area, along with the AR and CR waste vaults. The 242-A Evaporator is located just north of the A Plant and is used to concentrate tank waste. The B Plant was first used for the bismuth phosphate ($BiPO_4$) recovery process and was later modified to recover ^{137}Cs and ^{90}Sr from process and tank waste. The recovered cesium and strontium were sent to the Waste Encapsulation and Storage Facility located next to the B Plant. A map of the 200 East Area is shown in Figure 4-4.

The 200 West Area contains four process facilities: S, T, U, and Z Plants. The S Plant was used for the reduction oxidation (REDOX) process. The T Plant was first used for the $BiPO_4$ process and currently handles the decommissioning of equipment. The U Plant was originally built as a $BiPO_4$ plant but was modified for the tributyl phosphate process for the recovery of uranium in the $BiPO_4$ tank waste. The Z Plant houses the Plutonium Finishing Plant (PFP). Recovered plutonium was sent to the Z Plant for further purification and polishing prior to shipment to other DOE sites. One double-shell (SY) and six single-shell (S, SX, T, TX, TY, and U) tank farms are located in the 200 West Area, along with the 242-S and 242-T Evaporators for waste concentration. A map of the 200 West Area is shown in Figure 4-5.

Figure 4-2. Hanford Site Map.

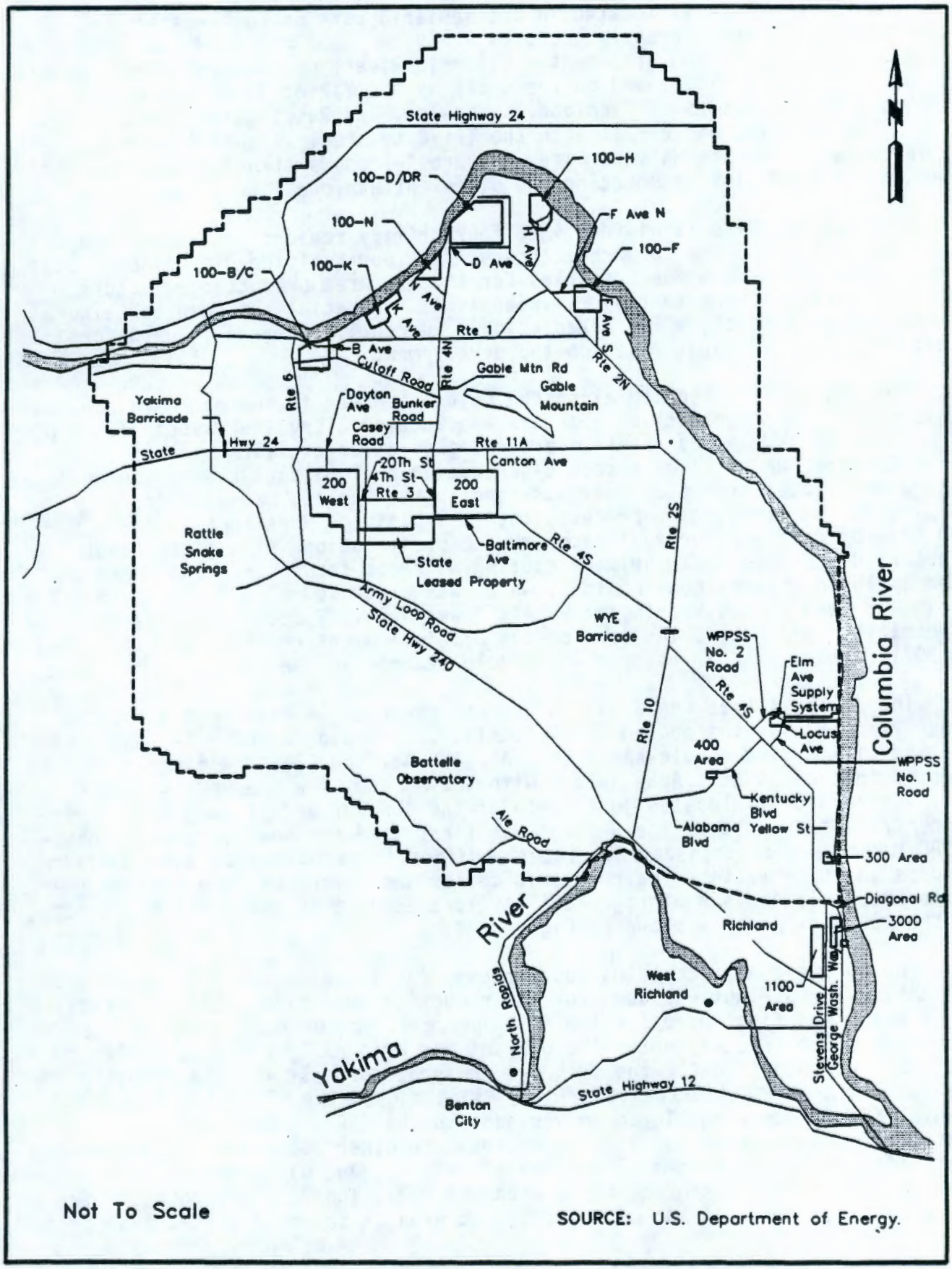

Figure 4-3. Hanford Site Railroad Trackage.

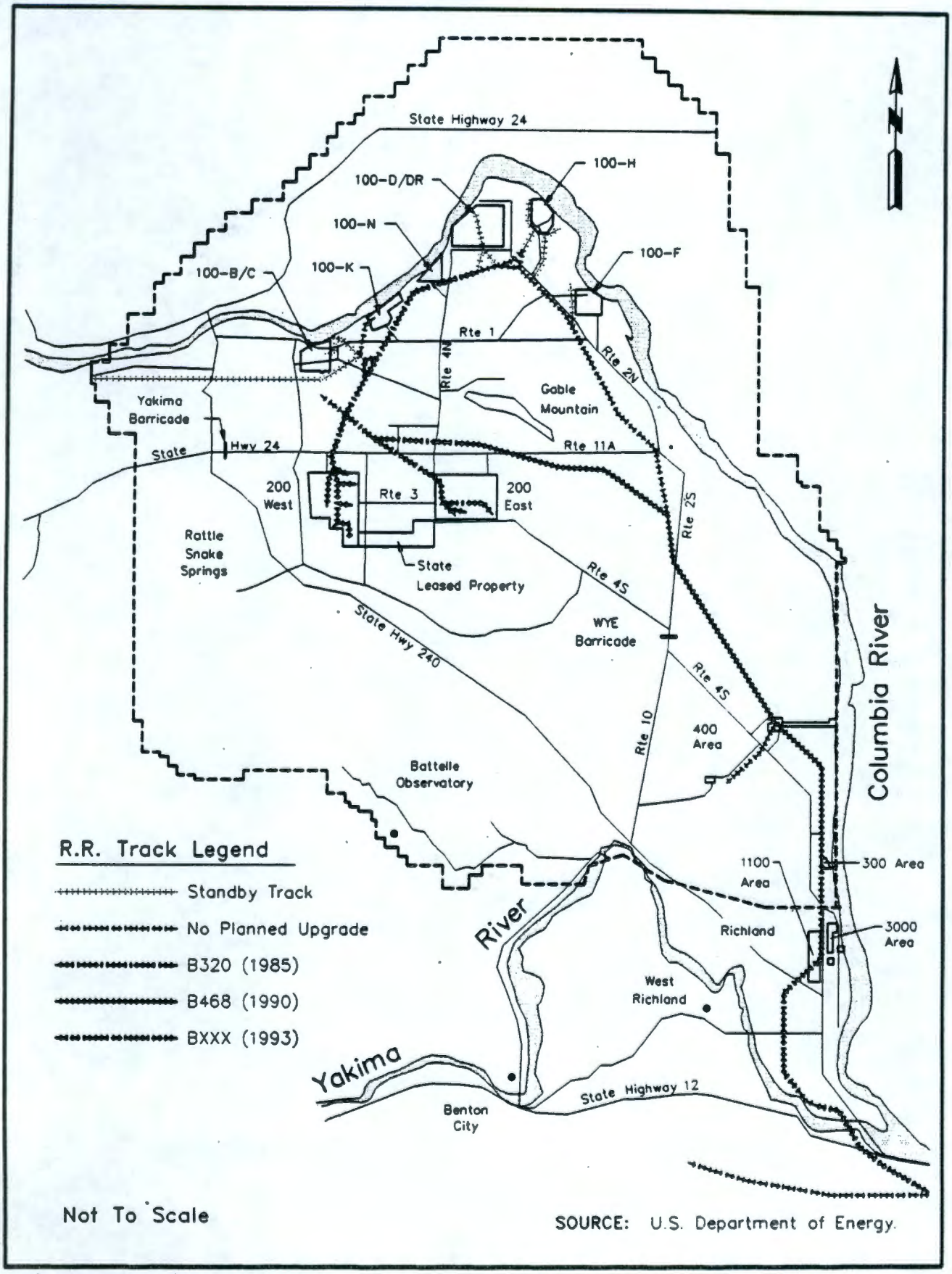

This page intentionally left blank.

Figure 4-4. 200 East Area.

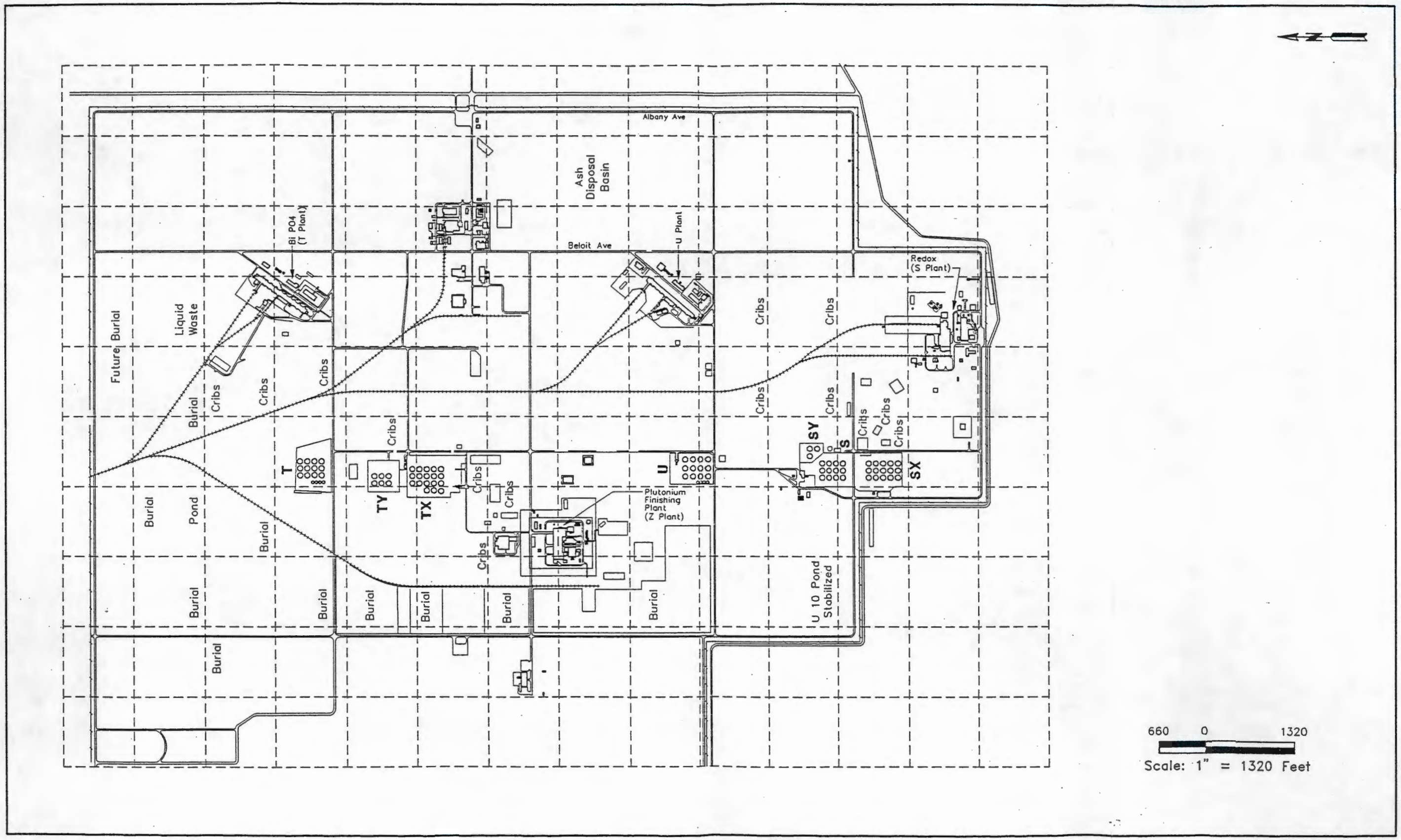

Figure 4-5. 200 East Area.

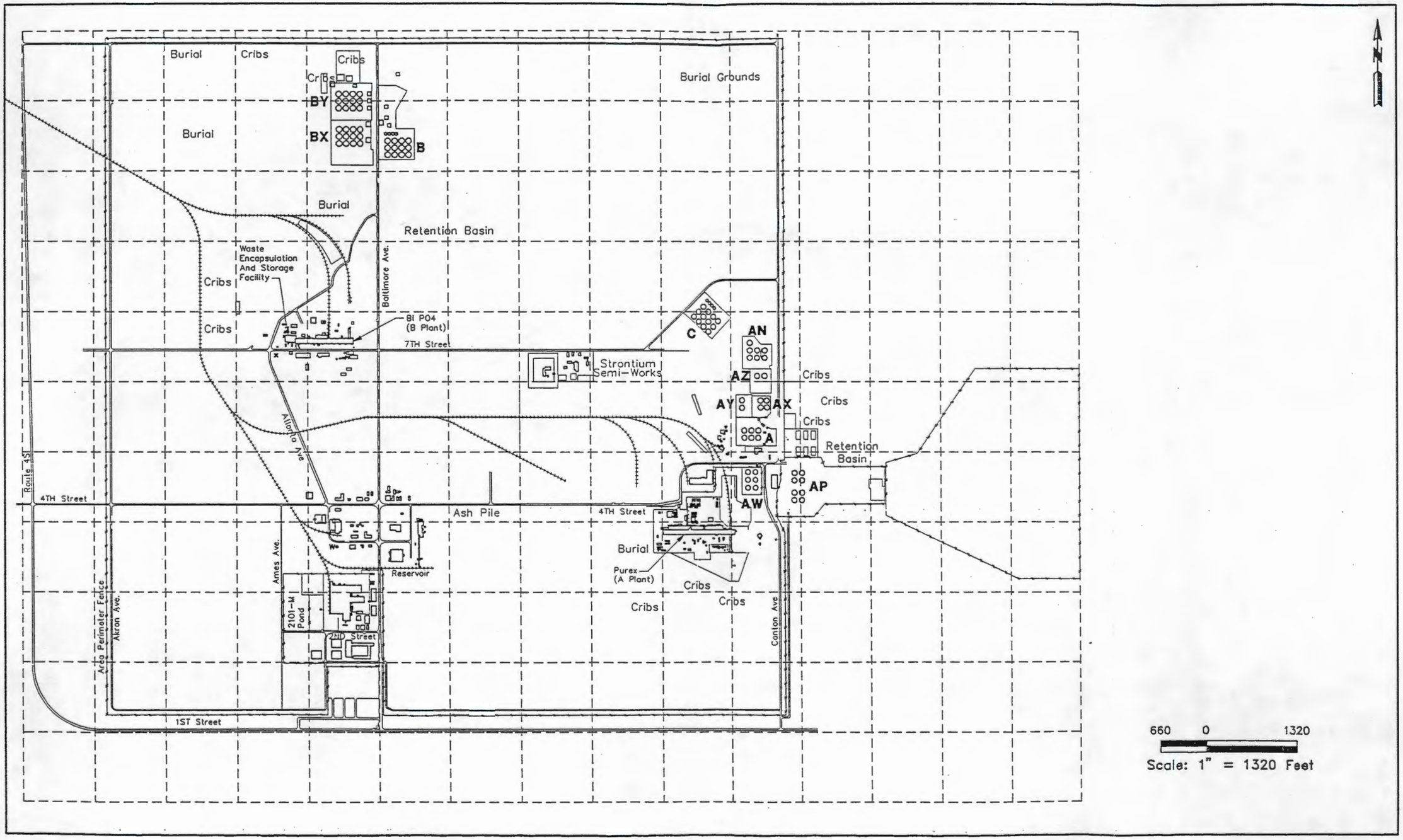

The FFTF is located in the 400 Area. As the world's largest liquid metal (sodium) test reactor, it served as the prime test tool for advanced reactor technology. The FFTF began full-power operation in April 1982. Since then, it has expanded into other areas of research and development, such as fusion research, space power systems, isotope production, and international research programs. The FFTF was placed in cold standby in 1992. The Maintenance and Storage Facility high bay at FFTF currently is being used, however, for cold testing of a mixer pump. The mixer pump, when approved for installation, will be used in Tank 101-SY to prevent the buildup and periodic release of potentially explosive gasses (Trice 1992).

The Washington Public Power Supply System operates a light-water reactor (Washington Nuclear Plant [WNP]-2) northeast of the 400 Area, along the Columbia River. Two uncompleted reactors are also located in this area, WNP-1 and WNP-4. The WNP-4 was terminated at 50% completion and is being dismantled and sold as surplus. Construction on WNP-1 was terminated at 63% completion and is now mothballed and in a state of preservation. The WNP-2 is a boiling water reactor and is capable of producing 1,100 MWe of power.

4.3 AMBIENT WEATHER AND CLIMATE CONDITIONS

This section provides information regarding the Hanford Site climate. Information was taken from the *Climatological Summary for the Hanford Area* (PNL 1983).

4.3.1 Climate

Although not visible from the Hanford Site, the Cascade Mountains to the west greatly affect the Hanford area climate. Because the Hanford Site is in the rain shadow of these mountains, precipitation averages only 15.9 cm (6.25 in) annually. The months of November through January contribute 44% of this total, while the months of July through September contribute only 12%. On the average, there are only two occurrences per year of 24-h precipitation amounts of 1.3 cm (0.50 in) or more, while occurrences of 24-h amounts of 2.54 cm (1 in) or more number only two in the entire 35-yr record (1946-1980). At the other extreme, there have been 81 consecutive days without measurable rain (June 22 to September 10, 1967); 139 days with only 0.46 cm (0.18 in) (June 22 to November 2, 1967); and 172 days with only 0.81 cm (0.32 in) (February 24 to August 13, 1968). Only 0.38 cm (0.15 in) of precipitation was recorded during the months of September through December 1976. The normal precipitation for that period of time is 6.4 cm (2.50 in) and is 40% of the total annual precipitation.

4.3.2 Precipitation

About 38% of all precipitation during the months of December through February is in the form of snow. However, in only one winter in four is an accumulation of as much as 15.2 cm (6 in) on the ground expected. The average seasonal number of days with 15.2 cm (6 in) or more of snow on the ground is 4, although the 1964-65 winter had 35 days, 32 of which were consecutive.

The greatest recorded depth of snow on the ground is 62.2 cm (24.5 in), which occurred in February 1916. However, since that date, the greatest depth has been 30.7 cm (12.1 in), occurring in December 1964.

Thunderstorms have been observed at the Hanford Site in every month except November and January. Although rare, severe lightning strikes have occasionally ignited grass fires, which have burned thousands of acres of Hanford Site vegetation, resulting in considerable wind erosion of soils. The most notable of these occurrences were in August 1961, July 1963, and July 1970.

4.3.3 Winds

By serving as a source of cold air drainage, the Cascade Mountains also have considerable effect on the wind regime at the Hanford Site. This drainage (gravity) wind, plus topographic channeling, causes a considerable range of speed during the summer. In July, the hourly average wind speed at a 15.2-m (50-ft) elevation ranges from a low of 8.4 km/h (5.2 mi/h) from 9 a.m. to 10 a.m. to a high of 20.9 km/h (13.0 mi/h) from 9 p.m. to 10 p.m. In contrast, the corresponding speeds for January are 8.8 km/h (5.5 mi/h) and 10.1 km/h (6.3 mi/h).

Although the gravity wind occurs with regularity in summer, it is seldom strong unless reinforced by frontal activity. In June, the month of highest average speed, there are fewer instances of hourly averages exceeding 31 mi/h (49.9 km/h) than in December, the month of lowest average speed. It is also notable that, although channeling results in a prevailing WNW or NW wind year round, the strongest speeds are from the SSW, SW, and WSW.

Atmospheric stagnation is an important factor in the Hanford Site's wind regime. December, for example, has an average of 10 days with peak gusts under 20.9 km/h (13 mi/h). By contrast, June is much more stagnant, averaging 0.2 days per year.

4.3.4 Temperatures

Temperatures at the Hanford Site are colder in the winter and warmer in the summer than would be the case without the Cascade Mountains. However, other mountain ranges to the north and east shield the area from many of the arctic surges, and half of all winters are free of temperatures as low as -17.8 °C (0 °F). However, 6 winters in 63 of record have contributed a total of 16 days with temperatures of -28.9 °C (-20 °F) or below; and in January to February 1950, there were 4 consecutive such days. There are 10 days of record when the maximum temperature failed to reach above -17.8 °C (0 °F). By contrast, the lowest temperature of the winter of 1925-26 was -5.5 °C (22 °F).

Although minimum winter temperatures have varied from -32.8 °C to 5.6 °C (-27 °F to 22 °F), maximum summer temperatures have varied only from 37.8 °C to 46.1 °C (100 °F to 115 °F). However, there is considerable variation in the frequency of such maximum temperatures. In 1954, for example, there was

only one day with a maximum as high as 37.8 °C (100 °F). On the other hand, there have been three summers (1938, 1962, and 1967) when the temperature reached 37.8 °C (100 °F) or above for 11 consecutive days.

Although temperatures reach 32.2 °C (90 °F) or above an average of 55 days per year, minimum temperatures of 21.1 °C (70 °F) or above occur only an average of 8 days per year. The usual cool nights are the result of the gravity wind phenomenon noted in Section 4.3.3.

4.4 GEOLOGICAL AND HYDROLOGICAL CONDITIONS

The Hanford Site lies within the Pasco Basin, one of many topographic and structural basins within the Columbia Plateau. The Pasco Basin is a result of folded Columbia River basalt, which comprises the bedrock in the region. The depth to basalt in the 200 Areas ranges from 83 m (250 ft) below land surface in the 200 East Area to 170 m (520 ft) in the 200 West Area. Overlying the basalt is a thick sequence of unconsolidated and consolidated muds, sands, and gravels derived from glaciofluvial, fluvial, and lacustrine depositions. These sediments comprise the Ringold Formation and the Hanford formation. These sediments are predominately gravelly sand to sand in the 200 East Area. In the 200 West Area these sediments range from compact silt and clay to unconsolidated sandy gravel.

Sediments immediately adjacent to the tanks (in both the 200 East and 200 West Areas) are predominately sandy gravel. These sediments are backfill material assumed to be derived from the original excavation for the tank emplacement. The most comprehensive geologic cross sections of the sediments immediately adjacent to the tanks are found in Price and Fecht (1976a-1976m). Figure 4-6 shows a generalized geologic cross section of the Hanford Site.

Both unconfined and confined aquifers are present beneath the Hanford Site. In general, the uppermost unconfined aquifer is located in the Ringold Formation sediments, except in the 200 East Area where the Ringold sediments have been significantly eroded, and the aquifer lies within the lower Hanford formation. Depth to water in the 200 Areas ranges from approximately 60 m (200 ft) below land surface in the 200 West Area to about 75 m (250 ft) below land surface in the 200 East Area. Table 4-1 gives the approximate water table depth data compared to the tank depth for each tank farm.

4.5 PROCESS HISTORY

The primary goal of the Hanford Site has been the production of weapons-grade plutonium (^{239}Pu) for use in atomic and hydrogen weapons. This was accomplished by irradiation of enriched uranium (97.5% ^{238}U and 2.5% ^{235}U) in graphite moderated reactors located along the shores of the Columbia River. Approximately 100,000 metric tons of uranium has been processed. The uranium metal was canned or "cladded" in aluminum or zirconium fuel slugs in the 300 Area for protection from the effects of reactor water coolant. The cladded uranium fuel was then transferred to the 100 Area in special railroad cars for irradiation in the area reactors. After completion of the irradiation process, the reacted fuel slugs were transferred to the Hanford Site 200 Areas where the produced plutonium was recovered and purified.

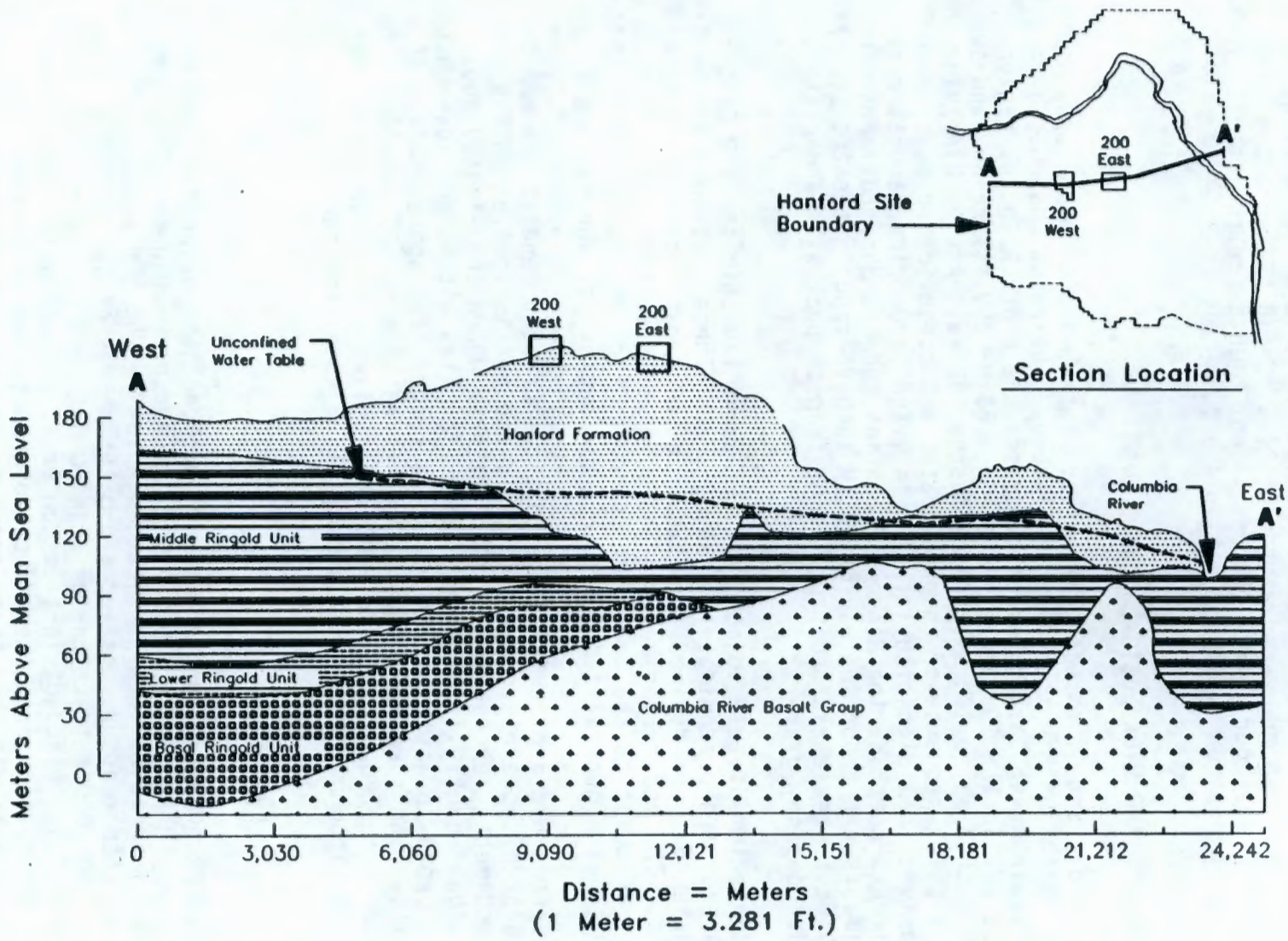

Figure 4-6. Hanford Geological Cross Section (PNL 1989).

Table 4-1. Tank Farm Groundwater Depth.

Tank farm	Distance (ground level to tank top)		Tank height		Distance (tank bottom to water table)	
	(m)	(ft)	(m)	(ft)	(m)	(ft)
A	2.3	7.6	14.3	47.2	70.1	231
AX	2.3	7.6	14.3	47.2	65.8	217
AY	2.1	6.9	14.9	49.2	65.8	217
AZ	2.1	6.9	14.9	49.2	59.4	196
B	1.8	5.9	8.5	28.1	61.9	204
BX	2.7	8.9	9.8	32.3	66.4	219
BY	2.4	7.9	11.9	39.3	60.0	198
C	2.7	8.9	8.5	28.1	66.1	218
S	2.4	7.9	11.9	39.3	43.9	145
SX	2.3	7.6	14.3	47.2	43.0	142
T	2.7	8.9	8.5	28.1	50.6	167
TX	2.4	7.9	11.9	39.3	51.2	169
TY	2.4	7.9	11.9	39.3	46.6	154
U	2.7	8.9	8.5	28.1	50.3	166
AW[a]	2.1	6.9	14.9	49.2	69.5	229
AP[a]	2.5	8.3	14.9	49.2	67.4	222
AN[a]	2.1	6.9	14.9	49.2	63.4	209
SY[a]	2.1	6.9	14.9	49.2	42.1	139

[a]Double-shell tanks.

Three processes have been used at the Hanford Site to recover plutonium. The first was the $BiPO_4$ process, used from 1944 to 1956. This process produced large amounts of waste for the amount of plutonium recovered. Second- and third-generation processes were the REDOX process (1951 to 1967) and the PUREX process (1955 to 1988), respectfully. These last two processes produced considerably less waste than the first-generation $BiPO_4$ process and recovered both plutonium and uranium. The PUREX process is internationally considered the most modern plutonium and uranium recovery process.

The waste that was generated from these three recovery processes was sent to USTs for storage. Currently, there are approximately 230,531 m^3 (60.9 Mgal) of waste in the Hanford Site USTs containing approximately

209.1 MCi of radionuclides. The following sections detail the various processes used in the recovery and purification of plutonium and the concentration efforts of tank waste to recover tank storage space (DOE 1987).

4.5.1 Bismuth Phosphate Process (1944 to 1956)

At the start of the Hanford Site operation, the B Plant and T Plant processes separated plutonium from the remaining uranium and fission products in the irradiated fuel by co-precipitation with $BiPO_4$ from a uranyl nitrate solution. The plutonium was then further separated from fission products by successive precipitation cycles using $BiPO_4$ and lanthanum fluoride. The plutonium was isolated as a peroxide and, after dissolving in nitric acid (HNO_3), was concentrated as plutonium nitrate.

The T Plant was constructed between June 1943 and October 1944 and started production on December 26, 1944. It was in operation until 1956. The B Plant was constructed between August 1943 and February 1945 and started production on April 13, 1945. It was in operation until 1952.

Waste generated at both the T Plant and B Plant was neutralized with sodium hydroxide and was sent to underground SSTs for storage. Other acidic waste (which included much of the fission products) generated by this process was also neutralized and stored in separate SSTs. The volume of neutralized waste generated and stored in SSTs was large; up to 64.4 m^3/ton (17,000 gal/ton) of uranium was processed at the start of the T Plant and B Plant operations.

4.5.1.1 Waste Concentration. While some improvements were incorporated, which resulted in minor waste volume reductions, the first significant development occurred in September 1947 when the cribbing of second decontamination-cycle supernatants was started at the T Plant. The program was later adopted at the B Plant in February 1948. Before this time, all second-cycle wastes had been stored in USTs. The waste was allowed to settle in the UST, and the supernatant was pumped to cribs. The remaining solids, containing nearly all of the initial fission activity but only a fraction (9%) of the original volume, were held in storage (Anderson 1990).

In June 1949, the concept of concentrating first decontamination-cycle wastes by evaporation was proposed. After determining that the approach was economically feasible, facilities were built for this purpose. The 242-T Evaporator commenced operation on May 1, 1951 and the 242-B Evaporator commenced operation on December 14, 1951.

During the lifetime of 242-T, over 32,550 m^3 (8.6 Mgal) of first-cycle feed were processed, and an 82.1% overall reduction in volume was realized. The storage space reclaimed by this technique totalled more than 26,500 m^3 (7 Mgal). Subsequently, the equipment processed 22,330 m^3 (5.9 Mgal) of uranium recovery waste, recovering 7,950 m^3 (2.1 Mgal) of storage. The facility was shut down in July 1955.

Some 22,700 m^3 (6 Mgal) of first-cycle feed were processed in the 242-B Evaporator, achieving a volume reduction of 81%. As with the 242-T Evaporator, the overall effectiveness was achieved by making two passes.

Usually the first pass gave about 70% reduction, and was followed by a second pass (bottoms from first evaporation) which concentrated approximately 30%. Also, this facility was used later for evaporating uranium recovery waste. Before shutdown at the end of October 1954, over 8,700 m^3 (2.3 Mgal) of space were recovered from uranium recovery wastes. Total space recovery by both evaporators amounted to 61,700 m^3 (16.3 Mgal) (Anderson 1990).

In May 1953, approval was obtained to pump a limited volume of first-cycle supernatant to ground trenches on a specific retention basis. Specific retention refers to the ability of a dry column of soil to retain liquid without penetration of the liquid to the water table. In June 1954, approval was obtained to dispose of evaporator bottoms in a similar manner. During the period from December 1953 to December 1954, 18,200 m^3 (4.8 Mgal) of first-cycle supernatants and 7,200 m^3 (1.9 Mgal) of first-cycle evaporator bottoms were discharged to the ground.

While disposal of first-cycle wastes on a specific retention basis was expedient at the time because of limited storage space, efforts were directed toward minimizing the quantity of activity sent to ground yet retaining the desirable feature of high-volume disposal. Although scavenging techniques had been tested previously at the Uranium Recovery Plant, success at the T Plant with first-cycle waste was not demonstrated until late in 1954. After difficulty with poor decontamination (attributed to interference from ions in the coating waste) was overcome by segregating the two wastes, routine scavenging of first-cycle waste started on December 31, 1954. Until the shutdown of the T Plant in August 1956, approximately 11,700 m^3 (3.1 Mgal) of scavenged supernatants were discharged to the TY ground caverns. The effective reduction in volume, as discharged from the building, was approximately 88%.

4.5.1.2 **Bismuth Phosphate Waste Streams.** During 12 yr of the $BiPO_4$ operations, waste volumes were effectively reduced by a factor of 3.25 from 64.4 m^3/ton (17,016 gal/ton) of uranium processed to 19.8 m^3/ton (5,240 gal/ton) of uranium. The following waste types were generated in the canyon buildings and sent to USTs.

Alkaline coating removal waste, containing small amounts of fission products, was combined with first-cycle decontamination waste for storage. Stack drainage, initially combined with second decontamination-cycle waste, was later combined with first decontamination-cycle waste in May 1951.

Metal waste from the extraction contained all of the uranium, approximately 90% of the original fission products activity, and approximately 1% of the product plutonium. This waste was brought just to the neutral point with 50% caustic and then treated with an excess of sodium carbonate. The procedure yielded almost completely soluble waste at a minimum total volume. The exact composition of the carbonate complex was not known but was assumed to be a uranium phosphate-carbonate mixture.

Byproduct cake solutions and waste solutions from the first decontamination waste cycle contained about 10% of the original fission activity and 1% of the plutonium.

Second decontamination-cycle waste contained less than 0.01% of the fission activity and about 1% of the plutonium. Canyon cell drainage waste, previously disposed to a dry well via the 361 Settling Tank, was combined with the second decontamination waste stream subsequent to May 1951.

4.5.2 Tributyl Phosphate Process and Sodium Ferrocyanide Operations (1952 to 1958)

The U Plant was originally built as one of three $BiPO_4$ process facilities, but it was not used for that purpose. It was extensively modified in 1951-1952 and used for the recovery of uranium in the $BiPO_4$ waste. Uranium was recovered using the tributyl phosphate (TBP) extraction process.

The $BiPO_4$ waste contains large amounts of unreacted uranium. Using the TBP process, large amounts of uranium were recovered by sluicing the waste out of the SSTs, dissolving it in HNO_3, and then processing it through a solvent extraction process using a solvent consisting of TBP in kerosene. The process was similar to that used later in the PUREX process for plutonium and uranium recovery. The acid waste from the uranium recovery process was made alkaline and returned to SSTs in the U Tank Farm. The recovery process resulted in an increase in nonradioactive salts and a small increase in waste volume.

Due to limited storage space available in the SSTs, the U Plant process was changed in October 1954 to include a waste scavenging process. The intermittent shortages were alleviated by the laboratory development of a waste scavenging technique using ferrocyanide, which removed soluble fission products, mainly ^{137}Cs, and permitted ground disposal of the resulting (and relatively inactive) supernatants.

Sodium ferrocyanide or potassium ferrocyanide and nickel sulfate were added between 1953 and 1957 to the $BiPO_4$ metal waste after uranium recovery to precipitate cesium from the supernate as a nickel cesium ferrocyanide. Following incorporation of this change in the uranium recovery process, over 109,800 m^3 (29 Mgal) of "in-plant" scavenged waste was disposed to ground cribs. A summary of ferrocyanide operations is shown in Figure 4-7.

Before October 1954, the uranium recovery wastes had been stored in an untreated condition. In November 1955, scavenging of this waste started at the 241-CR Facility. The removal of soluble cesium by the scavenging process permitted discharge of supernatant to the cribs and made more storage space available (Klem 1991). This resulted in an additional 44,300 m^3 (11.7 Mgal) of "in-tank" scavenged supernatants being disposed into the ground. This operation was completed in 1957. Overall, including the in-plant and in-tank operations, approximately 155,200 m^3 (41 Mgal) of space was recovered (Anderson 1990).

4.5.3 Reduction-Oxidation Process (1951 to 1967)

The REDOX was the first process to recover both plutonium and uranium. It used a continuous solvent extraction process to extract plutonium and uranium from dissolved fuel into a methyl isobutyl ketone (hexone) solvent.

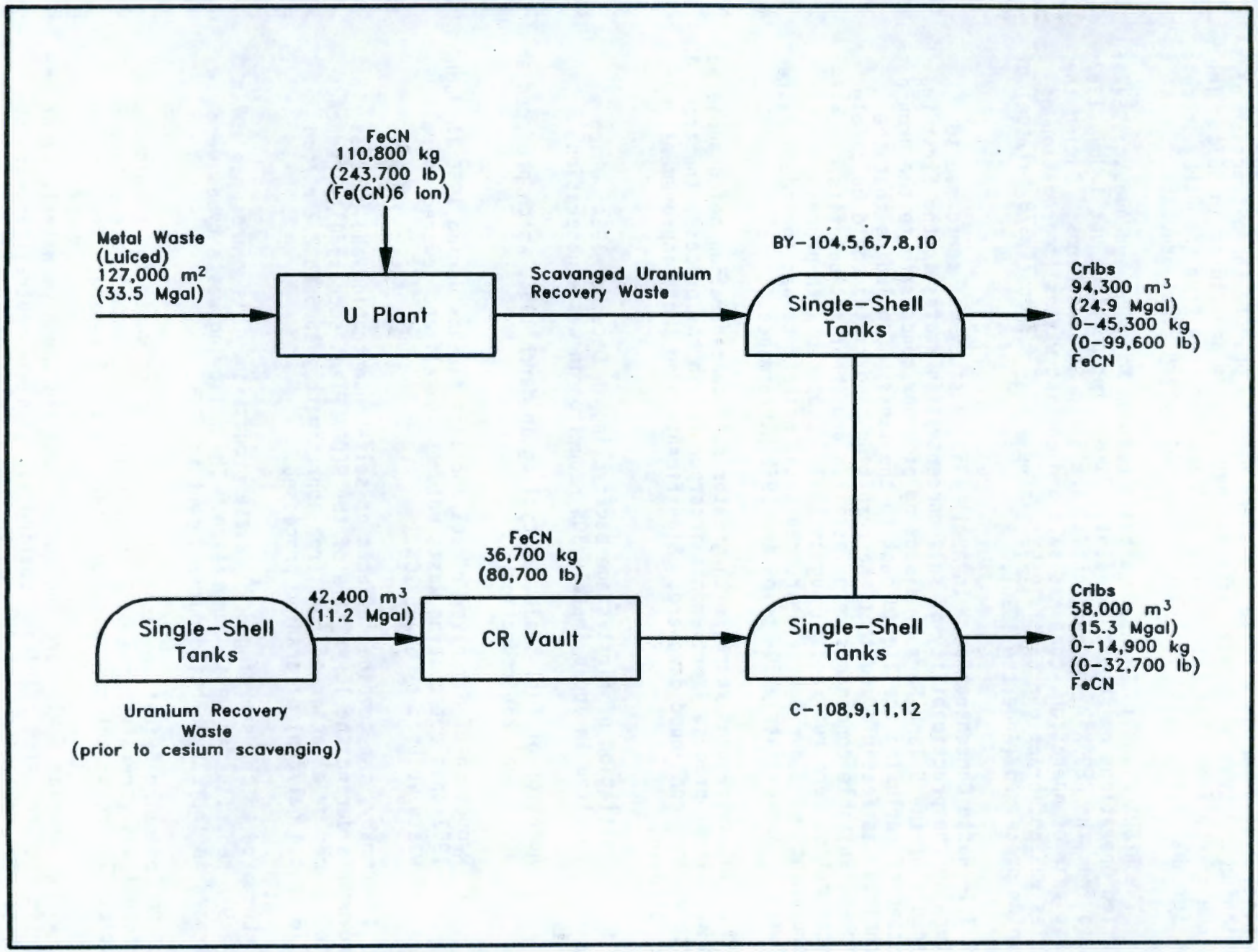

Figure 4-7. Hanford Ferrocyanide Operations (Borsheim and Kirch 1991).

The slightly acidic waste streams contained the fission products and large quantities of aluminum nitrate that were used to promote the extraction of plutonium and uranium. This waste was neutralized and stored in SSTs. The volume of HLW from this process was much smaller than from the $BiPO_4$ process but somewhat larger than the volume from the modern PUREX process.

The REDOX Plant (S Plant) was built between May 1950 and August 1951 and started operations on August 16, 1951. It was in operation until July 1967. Waste from the REDOX Plant was sent to the S and SX Tank Farms. During the first year of operation, combined salt and coating wastes (segregation of wastes was not practiced until 1955) averaged 16.6 m^3/ton (4,378 gal/ton) of uranium processed (Anderson 1990).

4.5.3.1 Waste Concentration. In April 1953, a study was performed to determine the practicability of self-concentrating wastes in the first two cascades of the S Tank Farm by disposing of vapor condensate to the ground instead of refluxing the liquid back to the tanks. Concluding that the technique was feasible and that the resulting condensates could be safely cribbed, suitable condensers were installed and the first benefits of self-concentration were realized in August 1953. Combined with process improvements made during the year, the total net effect was to reduce waste volumes to approximately 30% below the 1952 performance.

During subsequent years, with greater self-concentration being achieved and additional process improvements incorporated in the process, the trend of waste volumes continued downward. Significant among these improvements were the following:

- Initiation of first-stage backcycling in December 1954, which resulted in approximately 30% reduction in waste generation
- Adoption of full-scale backcycling in March 1956, which produced an additional 23% reduction
- Reduction of dissolver rinses and line flushes during 1956 through 1957 that cut coating waste volumes in half and lowered overall waste volumes by about 10%.

In summary, the combined effects of self-concentration and process improvements during the 16-yr life of the REDOX Plant successfully reduced waste volumes by a factor of 7.4, from approximately 16.6 to 2.2 m^3/ton (4,378 to 594 gal/ton) of uranium processed.

Compared to the starting $BiPO_4$ waste production, this represents a 74% and a 97% reduction in waste generation. The following waste types were generated in the canyon buildings and sent to USTs.

4.5.3.2 Reduction Oxidation Waste Streams. Coating waste for aluminum-clad spent fuel was generated in a boiling solution of sodium nitrate by adding 50% caustic. The resultant salt waste was sent to a UST separate from the HLW.

Zirconium-clad fuels were declad in a boiling ammonium nitrate-ammonium fluoride mixture. The resulting coating solution was neutralized with 50% caustic. This solution contained up to 40% soluble solids.

4.5.4 Plutonium-Uranium Extraction Process (1955 to 1972 and 1983 to 1988)

The PUREX process is an advanced solvent extraction process that uses a tributyl phosphate in kerosene solvent for recovering uranium and plutonium from HNO_3 solutions of irradiated uranium. It is the process generally used worldwide for recovering uranium and plutonium. Nitric acid is used instead of metallic nitrates (e.g., aluminum nitrate) to promote the extraction of uranium and plutonium from an aqueous phase to an organic phase. Most of the HNO_3 in the waste was recovered by distillation and reused. The waste, containing residual HNO_3, was neutralized and stored in USTs. Initially, SSTs were used for this purpose, but DSTs were used after 1981. The volume of HLW per unit of uranium fuel processed by the PUREX process was extremely small compared to that from earlier processes, achieving a low of approximately 1.44 m^3 (380 gal) of waste per ton of uranium processed.

The PUREX Plant (A Plant) was built between April 1953 and October 1955 and started operation in January 1956. It operated as a production facility until 1972. It operated again from November 1983 until 1988 and has been in a standby mode since then.

4.5.4.1 Waste Concentration. High initial waste volumes precluded self-concentration, resulting in two tanks (101-A and 102-A) being partially filled with wastes that never achieved a high enough temperature for self-concentration. In May 1956, the salt waste was routed to a third tank (103-A), and as a result of volume reductions plus temporary segregation of carbonate and organic waste, sufficient self-heat was generated to start boiling in Tank 103-A on July 5, 1956. Boiling accelerated at a rapid rate, attaining a peak rate in June 1957 of 37.9 L/min (10 gal/min). In February 1957, when boiling greatly exceeded input, and water additions became necessary to maintain a reasonable liquid level in the tank.

4.5.4.2 Plutonium-Uranium Extraction Waste Streams. The PUREX process is the modern plutonium and uranium recovery process and as such produces the least amount of waste per ton of uranium processed. This waste is extremely concentrated and is self-boiling. Both the aluminum clad and zirconium clad fuel waste concentrations at the PUREX Plant were the same as for REDOX decladding waste.

The solvent used in PUREX was treated before reuse by washing with potassium permanganate and sodium carbonate followed by dilute HNO_3 and then a sodium carbonate wash. The organic waste streams were combined and sent to boiling waste until 1969 for boildown. After 1969 the organic-wash waste was sent to a UST in the C Tank Farm.

In 1956, the original PUREX Plant neutralized all of the HLW and sent it to the A Tank Farm. A sugar denigration step was later used to partially neutralize the HNO_3/HF within the waste, producing NO_x gases which were vented to the atmosphere. The sugar was destroyed in the process. As fission product recovery started, a portion of the waste was treated for strontium and cesium recovery and then neutralized. As of 1967, all of the HLW left PUREX Plant as an acidic solution for treatment at the B Plant.

Special processing campaigns in the PUREX Plant recovered ^{233}U (a fissionable isotope of uranium) from thorium irradiated in the Hanford Site reactors. The thorium also was extracted and partially decontaminated. The waste composition was similar to that of the PUREX process except that it contained small quantities of thorium and ^{233}U instead of uranium and plutonium. Two campaigns were conducted, one in 1966 (4,500 m^3 [1.2 Mgal]) and one in 1970 (11,400 m^3 [3 Mgal]), and all of the waste was routed to Tank 104-C. This included equipment flushes both before and after the runs. The operating waste amounted to about one-third of the above totals.

4.5.5 Plutonium Recovery and Finishing Operations (1949 to 1989)

This facility, called the PFP or Z Plant, began operations in late 1949 to process plutonium and prepare plutonium products. It is located in the 200 West Area. (Before 1949, all plutonium nitrate solutions had been shipped offsite for further purification.) Waste from this plant contained only minor amounts of fission products but did contain low concentrations of plutonium and other TRU elements and was high in metallic nitrates. Initially this waste was discharged via cribs to soil columns, which absorbed the TRU elements and retained them close to the point of discharge. Later the waste was stored along with other waste in underground tanks.

The PFP uses a TBP solvent extraction process to further purify the plutonium product from the PUREX Plant or from plutonium scrap. The TBP in the PFP process is diluted in carbon tetrachloride, whereas the TBP in the PUREX Plant process is diluted in kerosene or normal paraffin hydrocarbons (NPH). The NPH is similar in composition to kerosene with C10 to C15 hydrocarbon chains.

4.5.6 Waste Fractionation Process (1965 to 1976)

The radionuclides ^{90}Sr and ^{137}Cs are the major sources of heat in Hanford Site HLW after about 5 yr of decay. Some of the strontium and cesium fission products were removed from the waste and separately isolated to reduce the heat generation in the SSTs. The B Plant, one of the original $BiPO_4$ process facilities, was modified in 1968 to permit removal of these fission products by a combination of precipitation, solvent extraction, and ion exchange steps. The residual acid waste from this process was neutralized and stored in SSTs.

The strontium from the B Plant waste fractionation process was separated using a diethylhexyl phosphoric acid solvent-extraction process. This process used various complexing agents to prevent transition metal extraction. The cesium isotope, also from the B Plant process, was purified by ion exchange. Both strontium and cesium were later converted to fluoride and chloride salts, respectively, and encapsulated in the Waste Encapsulation and Storage Facility located next to the B Plant.

4.6 UNDERGROUND STORAGE TANK PHYSICAL CHARACTERISTICS

Since 1944, radioactive HLW from the processing of irradiated uranium fuel has been stored in large underground tanks. Between 1943 and 1964, 149 SSTs were constructed for this purpose and range in operating capacities from approximately 208 to 3,790 m^3 (0.055 to 1 Mgal). Since 1968, 28 DSTs have been built to supplement the SSTs and to provide greater leak protection. The USTs are grouped into 18 tank farms located in the 200 East and 200 West Areas of the Hanford Site. There are eight design types, A, B, C, D1, D2, D3, E1, and E2, which are described in the following subsections. Table 4-2 summarizes the design of 18 tank farms at the Hanford Site. A tank-by-tank description is listed in Table A-1.

Table 4-2. Hanford Site High-Level Waste Storage Tank Farms.

Tank farm	DST/SST	Number-type	Total operating capacity (m^3)	Total operating capacity (gal)	Year of construction
A	SST	6 - D2	22,710	6,000,000	1954 - 1955
AN	DST	7 - E2	30,210	7,980,000	1980 - 1981
AP	DST	8 - E2	34,520	9,120,000	1983 - 1986
AW	DST	6 - E2	25,890	6,840,000	1978 - 1980
AX	SST	4 - D3	15,140	4,000,000	1963 - 1964
AY	DST	2 - E1	7,420	1,960,000	1968 - 1970
AZ	DST	2 - E1	7,420	1,960,000	1973 - 1977
B	SST	12 - A 4 - B	25,040	6,616,000	1943 - 1944
BX	SST	12 - A	24,210	6,396,000	1946 - 1947
BY	SST	12 - C	34,430	9,096,000	1948 - 1949
C	SST	12 - A 4 - B	25,040	6,616,000	1943 - 1944
S	SST	12 - C	34,430	9,096,000	1950 - 1951
SX	SST	15 - D1	56,780	15,000,000	1953 - 1954
SY	DST	3 - E2	12,950	3,420,000	1974 - 1976
T	SST	12 - A 4 - B	25,060	6,616,000	1943 - 1944
TX	SST	18 - C	51,650	13,644,000	1947 - 1948
TY	SST	6 - C	17,220	4,548,000	1951 - 1952
U	SST	12 - A 4 - B	25,040	6,616,000	1943 - 1944
Total site capacity			475,160	125,524,000	--

DST = double-shell tank.
SST = single-shell tank.

4.6.1 Tank Overview

Each of the Hanford Site USTs is constructed of reinforced concrete with carbon steel liners. All but the Type B tanks have 22.9-m (75-ft) inner diameters and are constructed to hold from 4.6 to 9.1 m (15 to 30 ft) of liquid for a nominal operating capacity of 2,020 to 3,790 m^3 (0.53 to 1 Mgal). Sixteen of the tanks (Type B) are of a smaller design, built to contain 208 m^3 (0.055 Mgal) each.

Many of the tanks built after 1954 were equipped with condensers and condensate disposal systems to permit the waste to self-concentrate. These are called boiling waste tanks. They are equipped with airlift circulators to mix the waste and avoid a fluctuating rate of boiling. A fluctuating boiling rate could result in tank pressurization. Self-boiling has been observed at rates of up to 37.8 L/min (10 gal/min) in the SX Tank Farm, and up to 113.4 L/min (30 gal/min) in the A Tank Farm.

The 22.9-m- (75-ft-) diameter SSTs are domed top, reinforced concrete, cylindrical structures varying in height from 8.8 to 13.6 m (29 to 45 ft). They are lined with A-36 steel plate on the sides and bottom. The thickness of the concrete on the bottom of the tank varies from 15.2 to 45.7 cm (6 to 18 in), and the sidewall thickness at the lower end is between 0.3 and 0.6 m (1 and 2 ft). The newer tanks have thicker linings and thicker concrete sidewalls and bottoms. The bottoms of most tanks are dished slightly. The tanks are below grade with at least 1.8 m (5.9 ft) of soil cover, which provides shielding and minimizes radiation exposure to operating personnel.

The Type A and Type C tanks were built in "cascades" of three or four tanks. Waste was transferred to the first tank of the cascade and allowed to overflow into successive tanks of the cascade through piping in the side walls. Inlet and overflow lines are located near the top of the tank liner. Access to the tanks is provided by risers penetrating the domes of the tanks. Existing risers vary in diameter from 10.2 to 106.7 cm (4 to 42 in.). Fifty-seven of the tanks also contain fiberglass pipes used for "liquid observation wells." Sixty-four of the 22.9-m- (75-ft-) diameter SSTs do not have a 106.7-cm- (42-in.-) diameter central riser or hole for access. Thirty-nine of the SSTs have four or five centrally located 106.7-cm- (42-in.-) diameter risers that can be used for retrieval. These tanks are located in the BY, TX, and S Tank Farms. Locations and sizes for all SST risers can be found in Krieg et al. (1990).

4.6.1.1 Single-Shell Tank Farms. The original tank farms (B, C, T, and U) were built from 1943 to 1944, and each consists of 12 Type A and 4 Type B SSTs. The Type A SSTs have dished bottoms, a 5.45-m (18-ft) wall height, and a 22.9-m (75-ft) interior diameter. They have a 2,020-m^3 (533,000-gal) operating capacity (4.9 m [16 ft] waste level height) and a 250-m^3 (66,100-gal) overflow capacity (0.6 m [2 ft] waste level height). They have an inner carbon steel liner and an outer concrete liner. The carbon steel liner ranges in thickness from 0.64 to 0.8 cm (0.25 to 0.31 in). This steel liner only comes up to the top of the side wall and, therefore, provides no protection to the concrete dome from waste vapors. The concrete liner ranges in thickness from 15.2 cm (6 in) at the bottom to just over 0.3 m (1 ft) for

the side walls and dome. The Type A tanks were cascaded in groups of three. A diagram of the Type A tanks is shown in Figure 4-8. They were designed to the following criteria:

- Waste density of 1.2 g/cm^3 (10 lb/gal)
- Maximum waste temperature of 104 °C (220 °F)
- Waste pH from 8 to 10
- Negligible heat generation.

Figure 4-8. Hanford Type A Single-Shell Tank (adapted from Krieg et al. 1990; ERDA 1975).

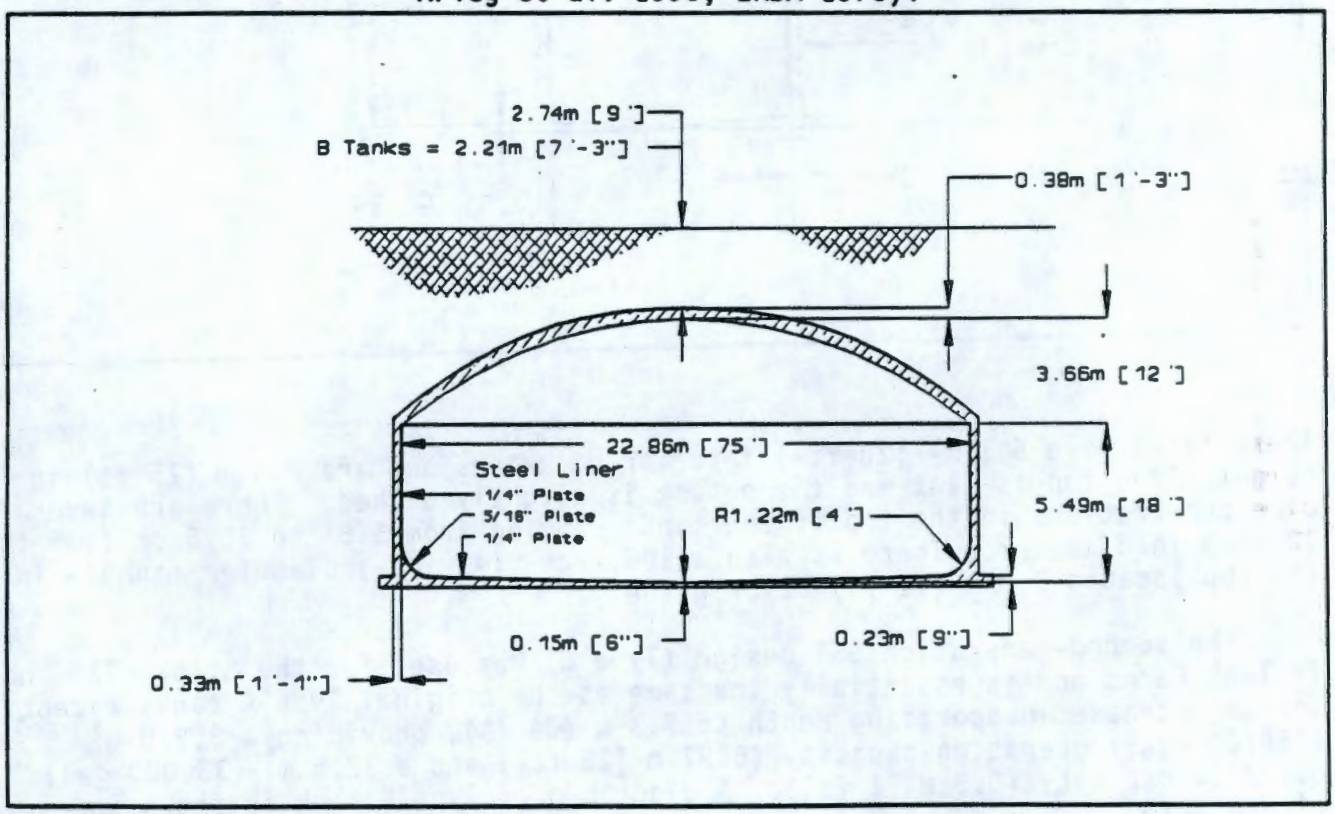

The BX Tank Farm was built from 1946 to 1947. It was built to the same design specifications as the original tank farms except the Type B tanks were excluded.

The Type B tanks have a 208-m^3 (55,000-gal) operating capacity (6.97 m [23 ft]) with a 9.8-m^3 (2,600-gal) overflow capacity (0.3 m [1 ft]). As with the larger tanks, Type B have a carbon steel inner liner with a 0.3-m (1-ft) concrete outer liner. The inner steel liner only extends to the top of the tank wall, providing no protection to the tank ceiling. The general configuration of the 6.1-m- (20-ft-) diameter SSTs is shown in Figure 4-9.

Figure 4-9. Hanford Type B Single-Shell Tank (adapted from Krieg et al. 1990).

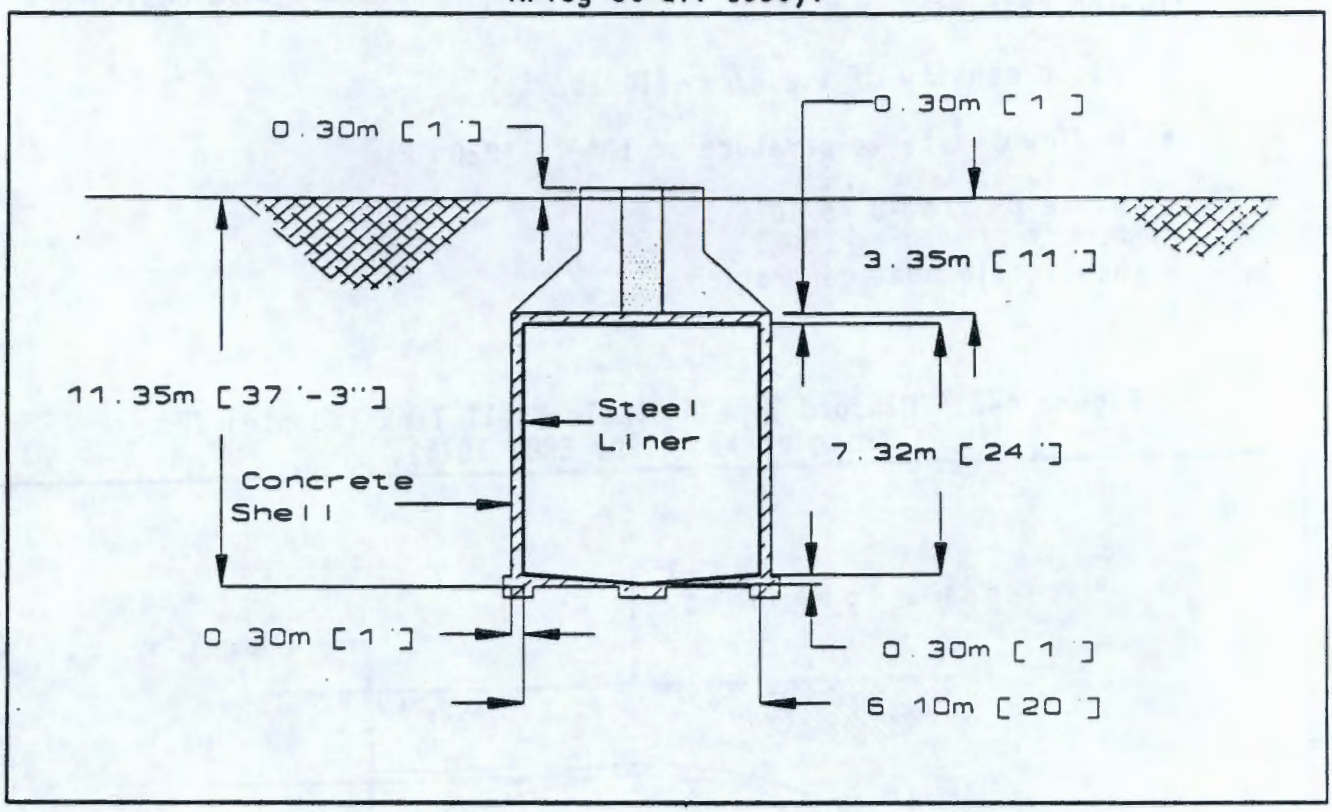

These tanks have 6.1-m- (20-ft-) interior diameters and are 7.6 m (25 ft) in height. The top is flat and the bottom is slightly dished. There are several pipe penetrations in the top of the tanks ranging from 3.81 to 30.5 cm (1.5 to 12 in.) in diameter. There is also a 106.7-cm- (42-in.-) diameter manhole in the top located 3.6 m (11 ft) below grade.

The second-generation SST design (Type C) was used for the S, BY, TX, and TY Tank Farms and is essentially the same as the original Type A tanks except for an increase in operating depth to 7.3 m (24 ft), providing a 3,870-m^3 (758,000-gal) operating capacity (6.97 m [23 ft]) and a 12.5 m^3 (33,000 gal) overflow capacity (0.3 m [1 ft]). A diagram of a Type C tank is shown in Figure 4-10.

The tanks were designed to the following criteria:

- Waste density of 1.25 g/cm^3 (10.4 lb/gal)
- Maximum waste temperature of 104 °C (220 °F)
- Waste pH from 8 to 10
- Waste heat generation less than 100,000 Btu/h (29,300 W) or 25 Btu/h/ton (7.33 W/ton).

The Type C tanks were built between 1947 and 1952.

Figure 4-10. Hanford Type C Single-Shell Tank (adapted from Krieg et al. 1990; ERDA 1975).

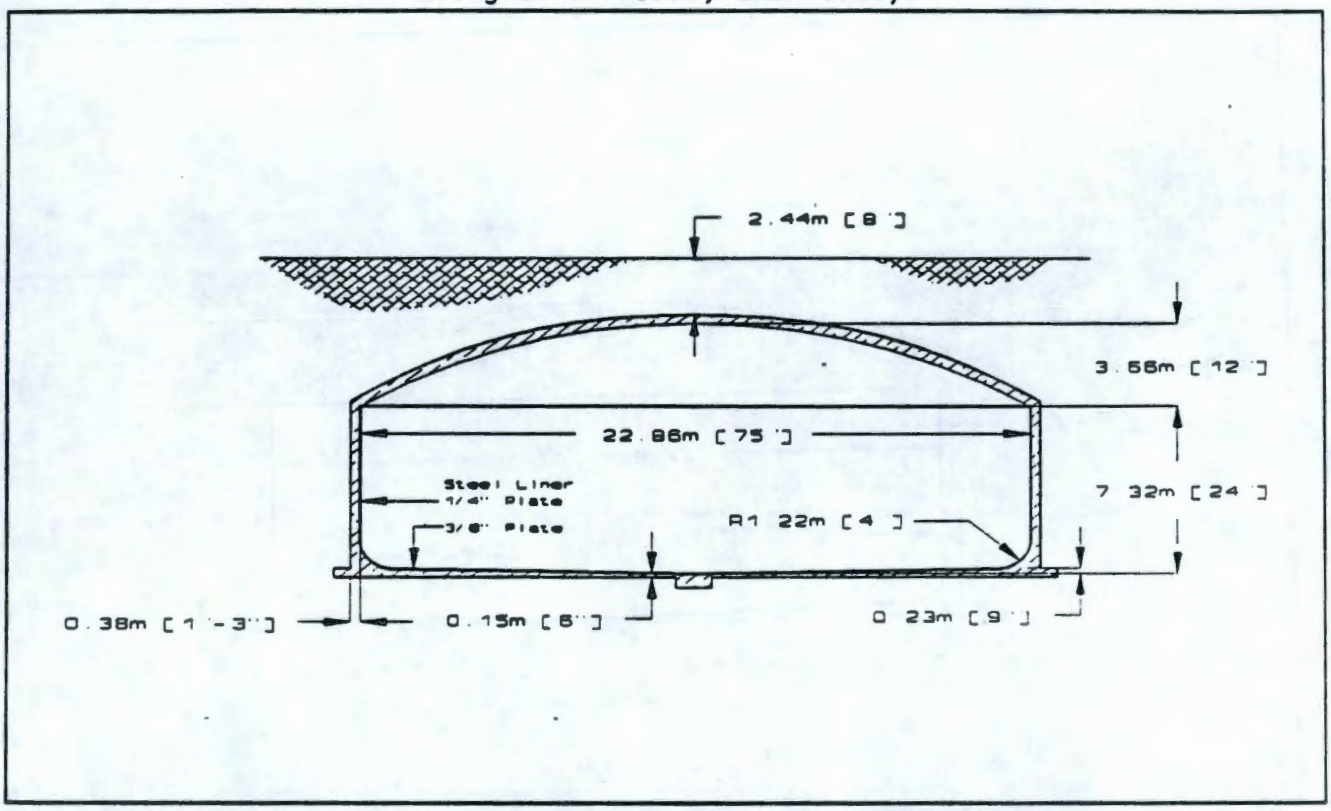

The third-generation SST design (Type D1) was used for the SX Tank Farm. The wall height was increased from the Type C design to 9.7 m (32 ft) providing a 3,785-m^3 (1-Mgal) operating capacity (8.9 m [29.5 ft]) and a 313-m^3 (82,600-gal) overflow capacity (0.76 m [2.5 ft]). This was the first of the boiling waste designs with an expected boiling period from 1 to 5 yr. A diagram of a Type D1 tank is shown in Figure 4-11. The tanks were designed to the following waste criteria:

- Waste density of 1.35 g/cm^3 (11.2 lb/gal)
- Maximum waste temperature of 121 °C (250 °F)
- Waste pH of 8 to 10
- Waste heat generation in the range of 1,000,000 Btu/h (293,000 W) or 180 Btu/h/ton (52.8 W/ton).

The Type D designs also include air lift circulators to keep the waste homogeneous. The SX Tank Farm was constructed between 1953 and 1954.

Figure 4-11. Hanford Type D1 Single-Shell Tank (adapted from Krieg et al. 1990; ERDA 1975).

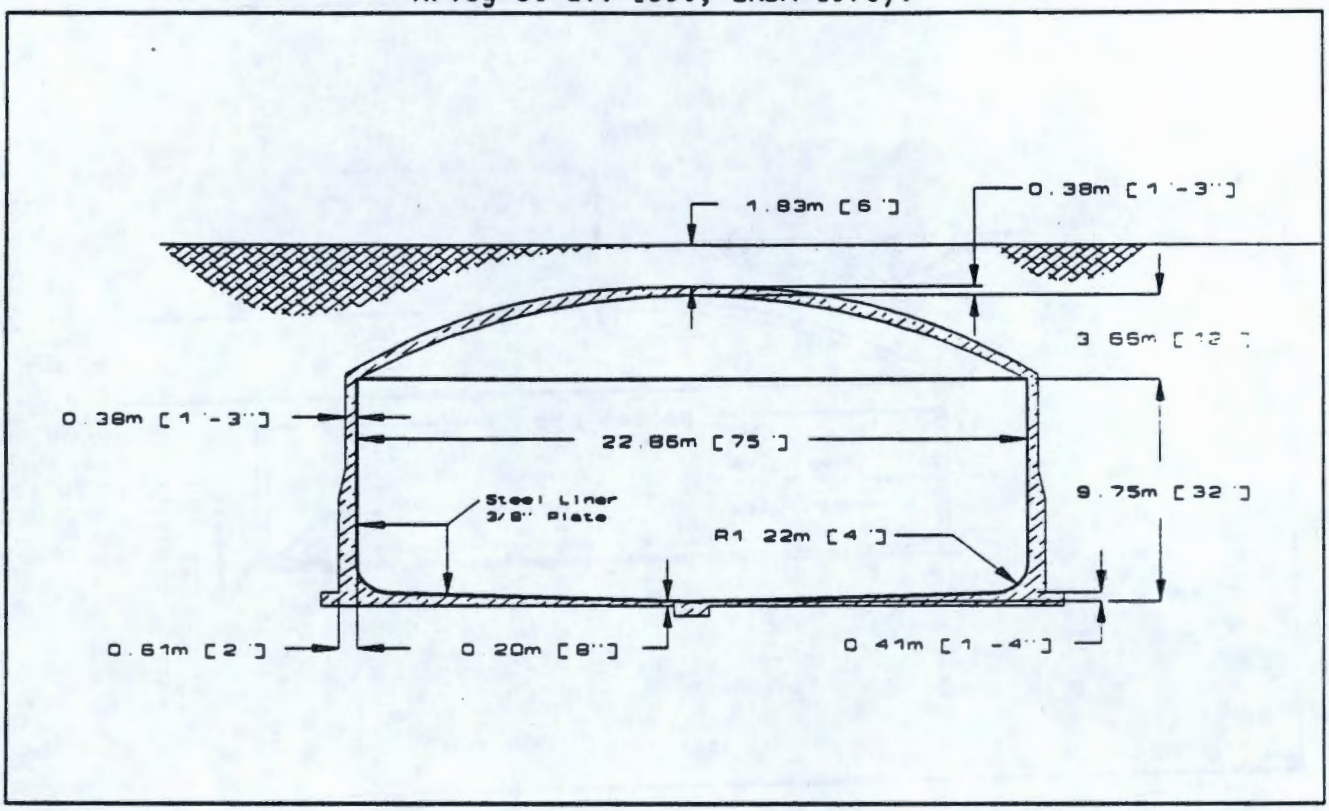

The fourth-generation SST design (Type D2) was used for the A Tank Farm and is very similar to the Type D1 tanks, having an operating capacity of 3,785 m^3 (1 Mgal) (9.2 m [30.24 ft]) and an overflow capacity of 282 m^3 (74,400 gal) (0.68 m [2.25 ft]). The A Tank Farm tanks were modified to have a flat instead of dished bottom and are also designed for boiling waste with an expected boiling period of 5 to 10 yr. A diagram of a Type D2 tank is shown in Figure 4-12. The design specifications follow:

- Waste density of 2.0 g/cm^3 (16.7 lb/gal)
- Maximum waste temperature of 121 °C (250 °F)
- Waste pH of 8 to 10
- Waste heat generation of 10,000,000 Btu/h (2,930,000 W) or 1,200 Btu/h/ton (352 W/ton).

The Type D2 tanks were built between 1954 and 1955.

The fifth-generation SST design (Type D3) in the AX Tank Farm is essentially the same as the A Tank Farm design with the addition of a grid of drain slots beneath the steel liner bottom. The grids function to collect potential tank leakage. This is then diverted to a leak detection well. The grids also serve as an escape route for free water formed as it is released

Figure 4-12. Hanford Type D2 Single-Shell Tank (adapted from Krieg et al. 1990; ERDA 1975).

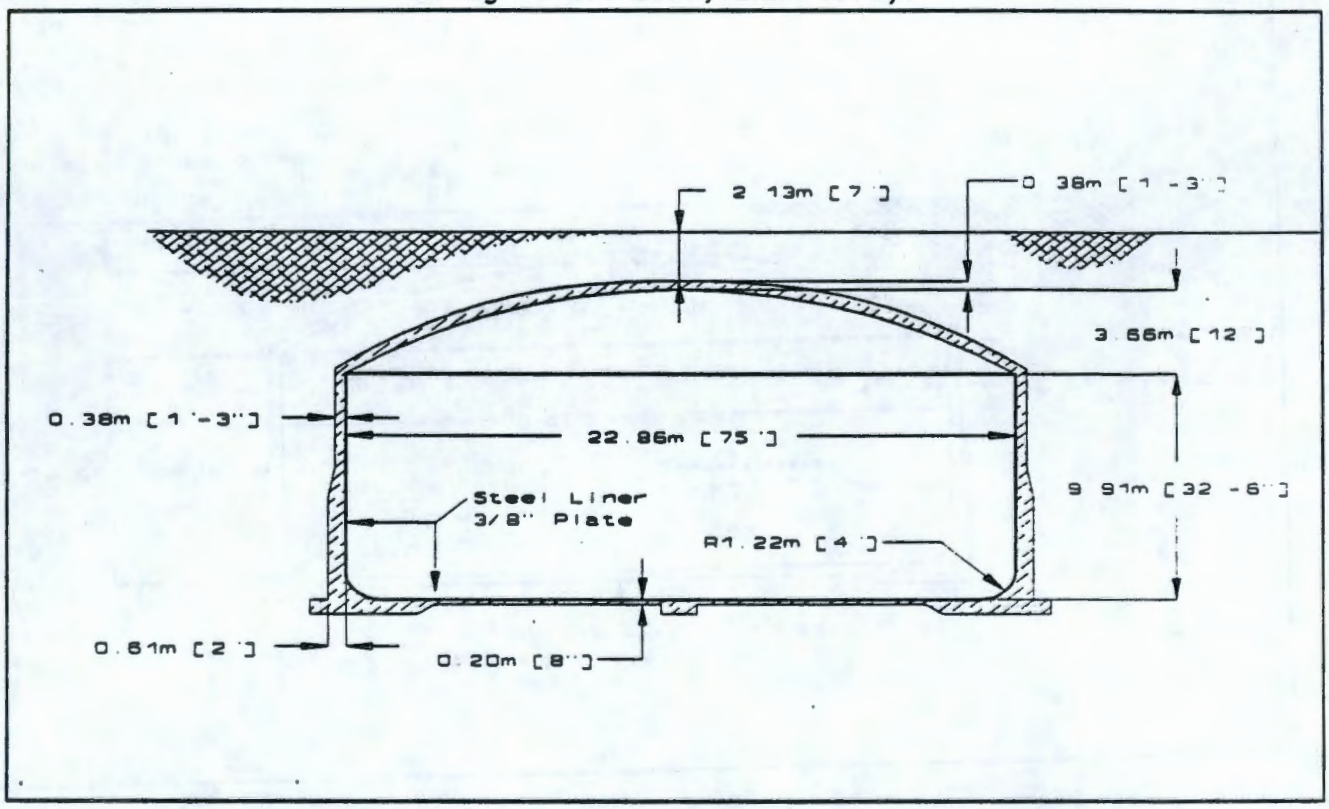

from the concrete grout during initial heating of the tank. A diagram of a Type D3 tank is shown in Figure 4-13. The tanks were designed for a boiling period of 1 to 5 yr.

The design specifications follow:

- Waste density of 1.8 g/cm^3 (15.0 lb/gal)
- Maximum waste temperature of 121 °C (250 °F)
- Waste pH of 8 to 10
- Waste heat generation of 10,000,000 Btu/h (2,930,000 W) or 1,300 Btu/h/ton (352 W/ton).

The AX Tank Farm was built from 1963 to 1964.

4.6.1.2 Double-Shell Tank Farms. The sixth-generation tank design (Type E1) was used in the AY and AZ Tank Farms and represented a departure from past tank designs. This design included a heat-treated, stress-relieved primary steel liner and a nonstress-relieved outer steel liner, both inside the reinforced concrete shell. The primary tank was fabricated from American Society of Testing and Materials (ASTM)-A515 Grade 60 steel, with wall

Figure 4-13. Hanford Type D3 Single-Shell Tank (adapted from Krieg et al. 1990; ERDA 1975).

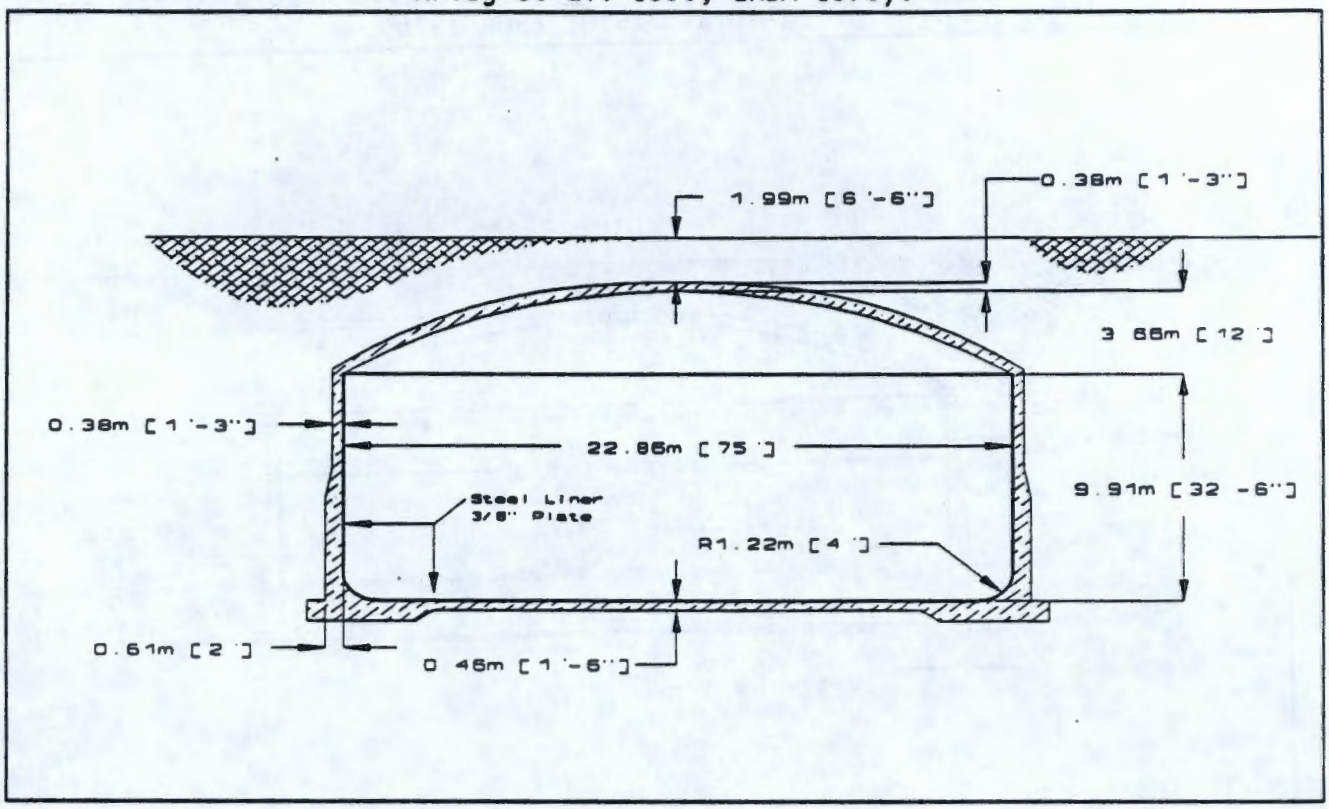

thickness varying from 1.3 cm (0.5 in.) at the bottom, to 2.2 cm (0.88 in.) at the knuckle, and to 0.95 cm (0.38 in.) at the top. Unlike the SSTs, the secondary shell extends to cover the concrete dome to protect it from waste vapors. The secondary steel wall (same type steel as the primary) consists of 0.95-cm- (0.38-in.-) thick plate. An annulus is provided between the two shells to collect leakage from the primary tank with the capability to detect and pump out leaked liquids. The tanks were built between 1968 and 1977 and have an operating capacity of 3,710 m^3 (980,000 gal) (9.1 m [30 ft]) and an overflow capacity of 313 m^3 (82,600 gal) (0.76 m [2.5 ft] - tank level).

The tanks were designed for boiling waste with a boiling period of 1 to 5 yr. They also included air lift circulators in order to agitate the waste. A diagram of a Type E1 tank is shown in Figure 4-14. The design criteria follow:

- Waste density of 1.8 g/cm^3 (15.0 lb/gal)
- Maximum waste temperature of 177 °C (350 °F)
- Waste pH of 8 to 10
- Waste heat generation rate of 10,000,000 Btu/h (2,930,000 W) or 1,300 Btu/h/ton (352 W/ton).

Figure 4-14. Hanford Type E1 Double-Shell Tank (ERDA 1975).

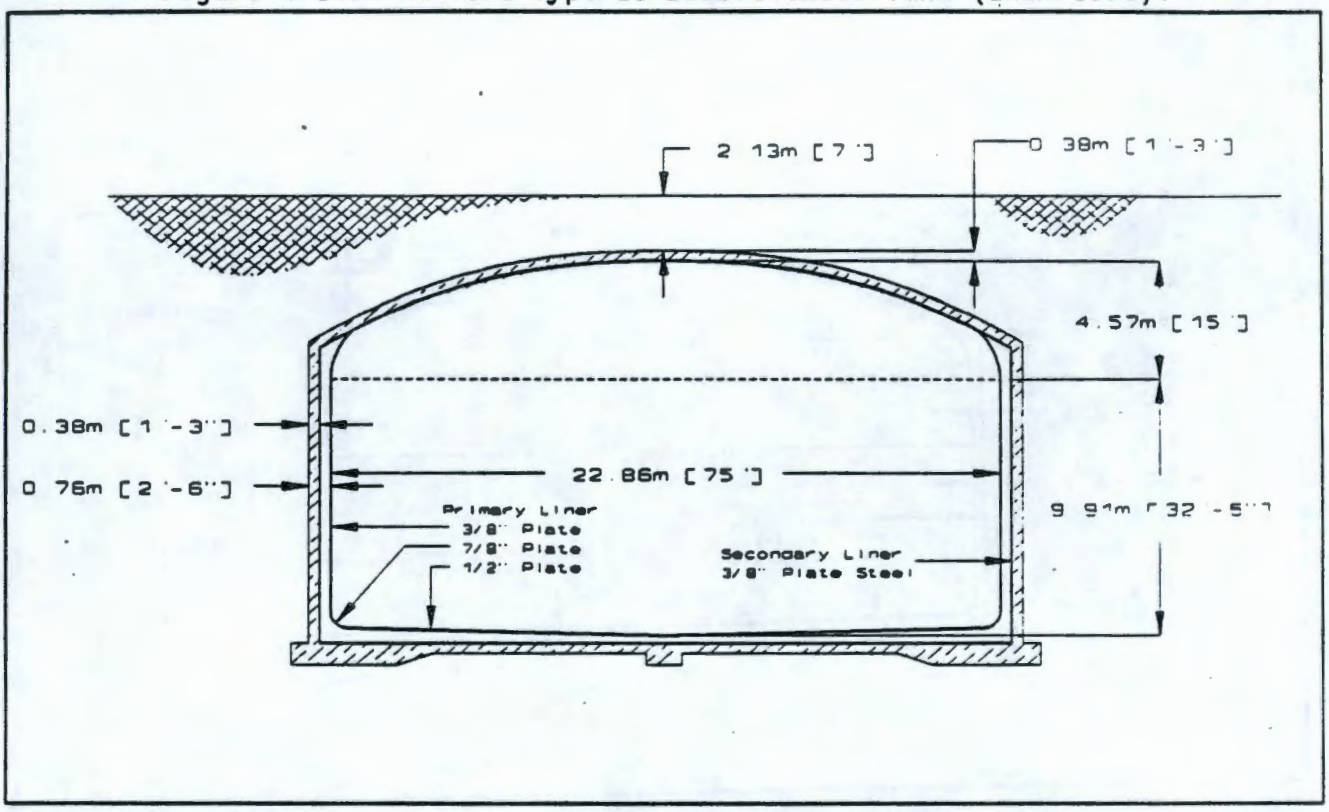

The seventh-generation tank design for USTs (Type E2) was used in the AP, AW, and SY Tank Farms. The tanks have the same general design as the sixth-generation tanks except for a slightly increased operating capacity of 4,315 m^3 (1.14 Mgal) (10.4 m [34.5 ft]) with an overflow capacity of 354 m^3 (93,600 gal) (0.85 m [2.8 ft] - tank level). They were designed for liquid and salt cake storage and do not have air lift circulators. A diagram is shown in Figure 4-15. The design life of these tanks for liquid waste or salt cake storage is at least 50 yr.

A future DST farm is planned to be built in the mid-1990's (AT Tank Farm). The addition of stainless steel liners instead of carbon steel will provide additional leak protection.

4.6.1.3 Tank Operating Practices. Those SSTs originally designed to hold nonboiling waste are A, B, or C type tanks. The tanks were originally arranged in cascades of three, four, or six tanks; i.e., the tanks were arranged in such a manner that when the first tank in a cascade was filled, it overflowed to the second tank, then to the third tank, etc. For the BX and BY Tank Farms, the final tanks in the cascades were cascaded to cribs to recover tank space. As various programs have been initiated through the years, many of the overflows between tanks in the various cascades have been removed, modified, or blanked. A number of the tanks are equipped with air-cooled reflux condensers. Dry wells located within the tank farms are used to monitor the soil for radioactivity, thus serving as a leak detection system. These dry wells extend to a depth of approximately 22.9 m (75 ft), which is several meters below the bottom of the tanks.

Figure 4-15. Hanford Type E2 Double-Shell Tank (ERDA 1975).

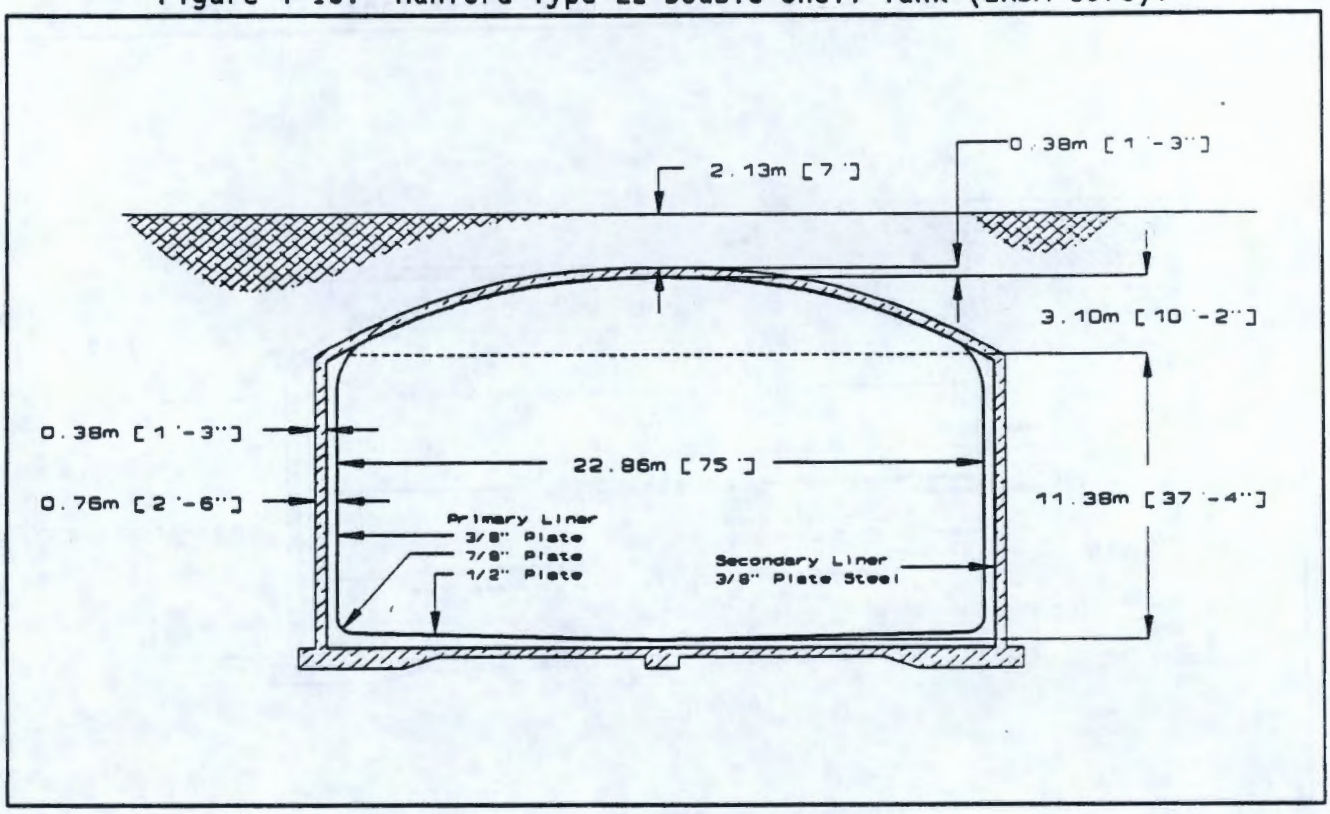

The routing of nonboiling liquid waste from the process buildings to the tank farms is done via underground lines and diversion boxes where selected underground piping was interconnected by jumpers. Leaks occurring in the diversion boxes, or into the surrounding line encasement, drain to catch tanks which are then pumped to the large USTs. Catch tanks and waste storage tanks are inventoried by taking electrode readings of the liquid levels.

On notification from the operating building to the tank farm that a batch of waste is ready to be pumped to a UST, the tank farm operator determines the following:

- A satisfactory routing is in place from the operating building to the designated receiving tank
- The receiving tank has sufficient space to accommodate the transfer.

If all conditions are satisfactory for the transfer, the tank farm operator notifies the operating building, and the transfer is started. After completing the transfer, the volume is logged for future reference.

There are five aging waste tank farms: A, AX, AY, AZ, and SX. The tank farms contain only Type D and E1 tanks, with a total of 29 USTs. The SX Tank Farm was used to store REDOX salt waste. It was the first to be equipped for handling boiling waste solutions, although not all of the SX tanks could accommodate self-boiling wastes. Of the 15 tanks in the farm, only Tanks 105 and 107 to 115 were equipped to handle self-boiling wastes.

The A, AX, AY, and AZ Tank Farms were built to store PUREX and B Plant aging wastes. Vapors from the boiling action, or self-concentration, are routed through headers to condensers, which are vented to the atmosphere through high-efficiency particulate air (HEPA) filters. Condensate is either discarded to cribs or returned to the waste tank where it is used to maintain the desired liquid level.

In the aging waste tanks, heat is generated when the fission products decay radioactively. Most of the heat generated is dissipated by boiling the supernatant, although a small amount of the heat is conducted to the ground. The rate of heat generation in a tank is dependent on the quantity of fission products present, which, in turn, is dependent on the characteristics of the fuel that was processed.

The SY, AW, and AN DST Tank Farms were placed into service for the storage of concentrated supernatant (salt cake). Current plans call for the storage of all tank farm liquid waste to be in DSTs.

After construction of a new waste storage tank, a minimum of 17.8 cm (7 in) of water is added to the tank to prevent the bottom liner from buckling under conditions of negative pressure maintained on the tank. A tank vacuum in excess of 15.2 cm (6 in) of water is impossible because of a water seal located in the tank farm vent header.

4.6.2 Internal Monitoring Systems

Monitoring devices and systems are used to determine the status of the stored wastes, to measure the potential effects of the stored waste upon the tank structures, and to indicate real or potential operating problems involving tank failure.

In relating to the waste tank structures themselves, the AX and AY tank designs provide for the installation of thermocouples in various locations within the concrete shell, within the sludge, and under the tanks. Using these thermocouples, temperature profiles may be taken as a means of determining thermal stresses within the shell and sludge, and to indicate the need for changes in the mode of operations of the tanks.

The A and SX Tank Farms include lateral piping located in the soil beneath the tanks. Radiation profiles and temperature patterns can be determined by passing a detection device through the piping. This information can be used to determine the tank's current condition.

Monitoring nonboiling tank supernatant and sludge levels indicates possible changes of conditions within the tank. Electrode tapes are used to determine liquid levels. Metal plate "floats" are used to determine sludge levels. The floats are 7.6 to 15.2 cm (3 to 6 in) in diameter and sink through the liquid until they contact the sludge layer.

Stress gauges have been installed on the AY tanks to provide a measure of any stress change occurring on the steel liner while the tanks are in service. The stress gauges are welded directly to the inner tank liner.

4.6.3 Underground Storage Tank Auxiliaries

Tank auxiliaries are provided to prevent or minimize the escape of radioactive material to the environment. The more significant auxiliary systems are briefly discussed below.

Airlift circulators were installed in aging waste tanks to promote mixing of the supernatant with the underlying slurry. By maintaining a mixing motion within the tank, the circulators minimized any superheating of the waste by concentration of fission products.

The circulators are long, open cylinders of varying lengths immersed in the tank's contents. An air line discharging at the base of the cylinder causes a flow of solution from the bottom to the top of the cylinder. This moves old solution from the bottom of the tank to the supernatant layer above.

The waste storage tanks in the T, U, B, C, SX, TX, and TY Tank Farms (Type A and C tanks) were equipped with air-cooled condensers of the multi-tubed, air-fin type and vented through HEPA filters to the atmosphere. These condensers were adequate for the waste temperatures and vapor loads encountered in the original operations, approximately 82 °C (180 °F) for sludge and supernatants.

The SX USTs were the first tanks designed for boiling service and were expected to boil from 1 to 5 yr. The heat load on the SX system increased as waste self-concentrated, and it was necessary to install airlift circulators to prevent superheating. This increased the vapor load on the ventilation system. The atmosphere in the tanks was considered saturated at the ambient temperature of the tank headspace, approximately 180 °F (82 °C). Depending upon the status of the tank contents, condensate was either discharged to a crib or returned to the tank to maintain the liquid level.

The A, AX, AY, and AZ Tank Farms have a common ventilation system. Backup facilities are provided by the A Tank Farm vent system. The SY, AW, and AN Tank Farms have their own ventilation systems.

4.7 UNDERGROUND STORAGE TANK WASTE PHYSICAL DESCRIPTIONS

As discussed in Section 4.5, four chemical processing operations in the 200 Areas produced large quantities of radioactive waste solutions that were transferred to USTs. These were the $BiPO_4$ process, the TBP process, the REDOX process, and the PUREX process. Three of these were chemical separation programs for the recovery of plutonium from irradiated reactor fuels. The fourth, TBP, was designed for the recovery of uranium metal from waste generated by the $BiPO_4$ process. Before transfer to the SSTs, sodium hydroxide and/or sodium carbonate was added to the waste to minimize tank corrosion. Thus, the processing of the irradiated fuels and treatment of the resulting waste have produced alkaline solids and liquids containing radionuclides and hazardous chemical constituents. Table 4-3 shows the waste volumes by type and by tank farm. A tank-by-tank listing of tank waste totals can be found in Table A-1.

As Table 4-3 indicates, the tank waste volumes vary considerably from tank to tank. Figure 4-16 shows the relative percentage of waste volumes compared to operating capacity.

Figure 4-16. Percent of Operating Capacity Filled with Waste.

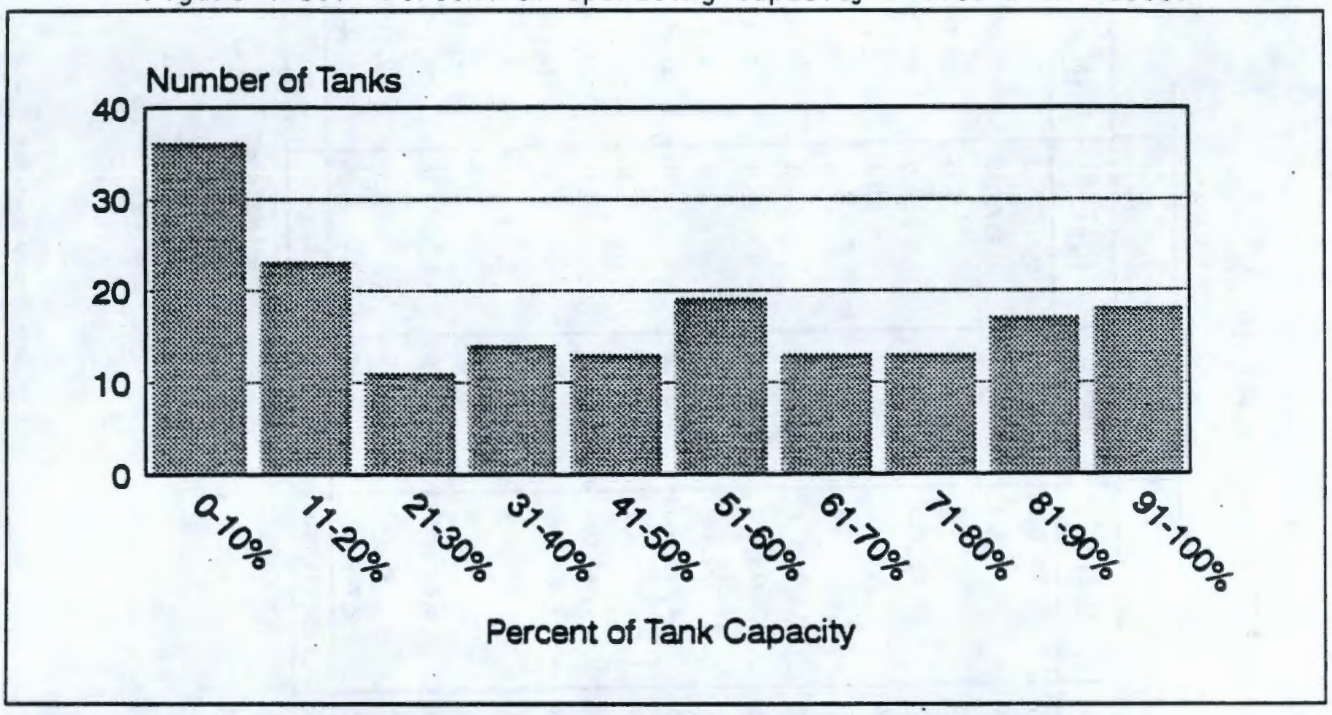

The principal activity in the waste comes from ^{137}Cs (49.3 MCi), ^{90}Sr (75.3 MCi), and their decay products. Strontium is largely insoluble and is located primarily in the sludge waste. On the other hand, cesium is soluble and is located in the liquid portion of the waste or has been precipitated with ferrocyanide also into the sludge. There are also approximately 23,150 Ci of TRUs, especially uranium and plutonium isotopes. The waste chemical composition is primarily sodium nitrate and nitrite salts, other sodium salts, metal hydroxides, and a small amount of organic compounds. The liquid portion of the waste has a pH of approximately 10 to 12. Very few mechanical properties are known, except that those from the few core samples to date and from synthetic waste. Bulk density ranges from 1.3 to 1.7 g/cm^3 (10.8 to 14.2 lb/gal). The particle size distribution ranges from 0.1 to 20 μm. The shear strength of solid wastes is estimated to be between 10,000 and 100,000 cyn/cm^2.

4.7.1 Supernatant Description

Supernatant (liquid) is the neutralized by-product of the Hanford Site acidic radioactive waste. As has been stated, waste volumes have been reduced by either sending supernatant to cribs for ground disposal, or evaporating off the water portion of the supernatant and returning the previously dissolved solids to the USTs in the form of salt cake. Freestanding supernatant has an approximate density of 1.6 g/cm^3 (13.3 lb/gal) and an average water content of 40.2%.

Table 4-3. Hanford Tank Farm Waste Volumes (March 1992).

Farm	Liquid		Sludge		Salt cake		Slurry		Total	
	(m^3)	(gal)	(m^3)	(gal)	(m^3)	(gal)	(m^3)	(gal)	(m^3)	(gal)
A	30	8,000	2,106	556,000	3,679	972,000	0	0	5,815	1,536,000
AN	20,880	5,517,000	1,571	415,000	0	0	3,547	937,000	25,998	6,869,000
AP	23,920	6,320,000	0	0	0	0	0	0	23,920	6,320,000
AW	15,240	4,025,000	4,296	1,135,000	742	196,000	0	0	20,278	5,356,000
AX	11	3,000	72	19,000	3,346	884,000	0	0	3,429	906,000
AY	4,727	1,248,000	436	115,000	0	0	0	0	5,163	1,363,000
AZ	6,739	1,779,000	477	126,000	0	0	0	0	7,216	1,905,000
B	57	15,000	6,424	1,697,000	1,306	345,000	0	0	7,787	2,057,000
BX	189	50,000	5,125	1,354,000	587	155,000	0	0	5,901	1,559,000
BY	0	0	2,721	719,000	15,236	4,025,000	0	0	17,957	4,744,000
C	640	169,000	7,484	1,977,000	0	0	0	0	8,124	2,146,000
S	174	46,000	4,433	1,171,000	18,037	4,765,000	0	0	22,644	5,982,000
SX	239	63,000	5,799	1,532,000	10,818	2,858,000	0	0	16,856	4,453,000
SY	3,049	805,000	269	71,000	2,135	564,000	4,175	1,103,000	9,628	2,543,000
T	280	74,000	7,537	1,991,000	0	0	0	0	7,817	2,065,000
TX	19	5,000	913	241,000	25,210	6,659,000	0	0	26,142	6,905,000
TY	11	3,000	2,163	571,000	242	64,000	0	0	2,416	638,000
U	636	168,000	2,417	638,000	10,387	2,744,000	0	0	13,440	3,550,000
Total	76,841	20,298,000	54,243	14,417,000	91,725	24,231,000	7,722	2,040,000	230,531	60,897,000

4.7.2 Sludge Description

Sludge consists primarily of heavy metals, iron, aluminum, and other various metal hydroxide precipitates. It is largely insoluble in the alkaline supernatant.

Sludge in the SSTs has been described in a number of ways:

- Varying in consistency from oatmeal to peanut butter
- Sandy with hard chunks of material
- Dried-up mud or clay
- Thick, sticky, and/or dark brown paste.

The viscosity of the thicker sludges is expected to approach 1,700 Pa·s. Some of the sludges have been allowed to dry and have formed cracked patterns similar to a dry lake bed. Some photographs indicate there is dried sludge on top of salt cake. Simulated sludges, using nonradioactive material, are being developed to study the physical and chemical characteristics. The sludge is approximately 33.6% water and has an average density of 1.7 g/cm^3 (14.2 lb/gal).

4.7.3 Salt Cake Description

Most of the SSTs contain waste in the form of a salt cake. Salt cake makes up approximately 50% of the total Hanford Site waste volume and consists primarily of sodium nitrate. Salt cake is the concentrate produced by the evaporation of supernatant waste. Damp salt cake appears to have a consistency of jelly. The salt cake in the SSTs will vary from wet, to dry, to damp, and may contain pockets of liquids. Dried salt cake is a hard, abrasive, brittle material and even exists in large crystals. The porosity of the salt cake is expected to vary from 10% to 50%. The average water content is approximately 10.5% and the average density is 1.4 g/cm^3 (11.7 lb/gal).

4.7.4 Double-Shell Slurry Description

Double-shell slurry is described as waste that has been evaporated almost to its sodium aluminate saturation boundary or 6.5*M* hydroxide in the evaporator (Hanlon 1992). The average density of slurry is estimated to be 1.3 g/cm^3 (10.8 lb/gal) with a water content of 56.2%.

4.7.5 Other Waste Descriptions

In addition to the three major waste types (supernatant, sludge, and salt cake), there are several sub-categories associated with waste stored in the DST. The following is a description of these waste types (Hanlon 1991):

- Aging waste--High-level, first-cycle solvent extraction waste from the PUREX plant; neutralized current acid waste.

- Concentrated complexant--Concentrated product from the evaporation of dilute complex waste.

- Concentrated phosphate waste--Waste originating from the decontamination of 100-N Area reactor. Concentration of this waste produces concentrated phosphate waste.

- Dilute complexed waste--Characterized by a high content of organic carbon, including organic complexants such as ethylenediamine-tetraacetic acid, citric acid, hydroxyethyl ethylenediaminetriacetic acid, and iminodiacetate. Main sources of diluted complexed waste are salt well liquid inventory.

- Dilute noncomplexed waste--Low-activity liquid waste originating from T and S Plants, the 300 and 400 Areas, PUREX facility (decladding supernatant and miscellaneous wastes), 100 N Area (sulfate waste), B Plant, salt wells, and PFP (supernatant).

- Double-shell slurry feed--Waste evaporated just before reaching the sodium aluminate saturation boundary or 6.5*M* hydroxide in the evaporator. This form is not as concentrated as double-shell slurry.

- Noncomplexed--General waste term applied to all Hanford Site liquors not identified as complexed.

- PUREX decladding--PUREX neutralized cladding removal waste is the solids portion of the PUREX plant neutralized cladding removal waste streams; received in tank farms as slurry. Classified as TRU waste.

4.7.6 Unique Contents of the Underground Storage Tanks

In addition to the typical salt cake, sludge, supernatant, other wastes, and various installed obstructions within the tank, there are also unique contents that have been added or abandoned within some tanks. Some of these contents have been listed in Table 4-4. In the past, metal measuring tapes, level instrumentation, experimental fuel elements, sample bottles, and other contaminated scrap were disposed of in the SSTs. Some of the SSTs may contain several hundred of these items. Diatomaceous earth was added to some of the tanks in an attempt to absorb moisture and reduce the potential for leakage.

The actual list of unique contents added to SSTs over the last 40 yr is much larger than that shown in Table 4-4. Numerous items were added and never recorded. Retrieval operations of the tank waste will have to be prepared for the unexpected.

Table 4-4. Unique Contents of Single-Shell Tanks.

Tank	Contents
101-BX	7 m^3 (1,850 gal) ARC-359/organic ion exchange resin, added 1972
102-BX	95 Mg (104.6 tons) diatomaceous earth, added January 1972
105-BY	57 Mg (62.8 tons) portland cement
107-SX	41 bottles neutralized waste from 100-F Area, each with <1 g of ^{239}Pu
110-SX	16 plastic bottles or containers (7.6 cm [3.0 in.] in diameter by 137.2 cm [54.0 in] long) containing the following total masses: • 113 g natural uranium • 53 g depleted uranium • 6 g enriched uranium • 204 g ^{239}Pu
113-SX	41 Mg (45.1 tons) diatomaceous earth, added April 1972
116-TX	95 Mg (104.6 tons) diatomaceous earth, added November 1972
117-TX	41 Mg (45.2 tons) diatomaceous earth, added January 1971
106-TY	27 Mg (29.7 tons) of diatomaceous earth, added February 1972
101-U	Tank was used for disposal of solid waste: • Six cask loads of experimental fuel elements, shroud tubes, and samarium "poison" ceramic balls containing: - 1,530 g 4.5% enriched uranium - 6 g plutonium - 6.75 E+15 Bq ^{60}Co - 2.6 E+12 Bq mixed fission products - ^{60}Co slugs with 2.6 E+12 Bq ^{60}Co
104-U	55 Mg (60.6 tons) diatomaceous earth, added May 1972

Source: Boomer 1991.

4.7.7 High-Priority Waste Tank Safety Issues

There are four high-priority tank issues at the Hanford Site:

- Flammable gas generation (H_2)
- Potential explosive mixtures of ferrocyanide
- Potential explosive mixtures of organic and nitrate salts
- Continued cooling of high-heat generating tanks.

Except for five DSTs that generate flammable gases, all of the remaining high-priority tanks are SSTs. These four categories are discussed in the following sections (Babad et al. 1991).

4.7.7.1 Flammable Gas Generating Tanks. Five DSTs and 18 SSTs generate, store, and periodically appear to release significant quantities of flammable gases, primarily mixtures of hydrogen and nitrous oxide. If an ignition source is present at this time, this gas mixture could ignite and burn. This could cause filters in the venting system to fail, resulting in a spread of contamination. The worst postulated consequence is the potential of hydrogen burning and causing the crust of the waste to ignite leading to larger releases (Wilson 1991).

Hydrogen gas and nitrous oxide production in Tank 101-SY is the primary waste tank safety issue at the Hanford Site because the average peak concentrations of hydrogen gas during releases is periodically above the lower explosive limit for hydrogen. Such venting of flammable gases is expected to continue until some remediation action is taken.

The other 22 tanks also produce flammable gases, but with a lower hydrogen concentration and with less overall volume. Evidence of venting, surface level behavior, and knowledge of the other tank contents suggests a much lower probability of potentially dangerous gas concentrations in these other tanks. All 23 tanks are listed in Table 4-5 with tank waste temperature.

Table 4-5. Flammable Gas Accumulation Tanks.

Tank	Temperature[a]		Tank	Temperature[a]	
	°C	°F		°C	°F
101-A	68	155	109-SX	69	156
101-AX	60	141	110-T	17	63
103-AX	46	115	103-U	32	89
102-S	42	108	105-U	33	92
111-S	36	96	108-U	32	90
112-S	31	87	109-U	33	91
101-SX	59	139	103-AN[b]	44	112
102-SX	67	153	104-AN[b]	45	113
103-SX	84	184	105-AN[b]	43	110
104-SX	79	174	101-SY[b]	52	125
105-SX	87	189	103-SY[b]	46	114
106-SX	47	116			

[a]As of March 1992.
[b]Double-shell tanks.

4.7.7.2 Potentially Explosive Mixtures of Ferrocyanide in Single-Shell Tanks. Twenty-four SSTs contain insoluble ferrocyanide salts in quantities greater than approximately 1,000 gmoles (500 lb) of ferrocyanide. Sodium ferrocyanide was introduced to the tanks to precipitate ^{137}Cs as was discussed in Section 4.5.2. If subjected to high temperatures, ferrocyanide could become explosive.

Ferrocyanide tanks were identified as a safety issue because not enough is known about the concentrations and distribution of ferrocyanide and nitrate-nitrite materials in the tanks. There is a possibility of an uncontrolled exothermic reaction or explosion if tank contents are allowed to heat up. Although the measured tank temperatures are far below the temperature required to cause an exothermic reaction (285 °C [545 °F]), hot spots and/or a catalyst within the tank waste could make a reaction more likely. Table 4-6 shows the SSTs suspected of having high quantities of ferrocyanide and their respective tank waste temperatures.

Table 4-6. Single-Shell Tanks Containing >1,000 Grams/Mole of Ferrocyanide.

Tank	Temperature[a]		Ferrocyanide (×1,000 gmole)	Tank	Temperature[a]		Ferrocyanide (×1,000 gmole)
	°C	°F			°C	°F	
102-BX	18	65	0-1	111-BY	31	87	6
106-BX	17	63	0-1	112-BY	28	83	2
110-BX	20	64	0-1	108-C	22	71	25
111-BX	21	69	0-1	109-C	25	77	30
101-BY	23	74	0-1	111-C	21	69	33
103-BY	27	80	66	112-C	27	81	31
104-BY	54	129	83	101-T	23	74	0-1
105-BY	45	114	36	107-T	19	66	5
106-BY	55	131	70	118-TX	24	75	0-1
107-BY	36	97	42	101-TY	20	68	23
108-BY	33	92	58	103-TY	19	67	28
110-BY	49	120	71	104-TY	21	69	12

[a]As of March 1992.
Source: Hanlon 1992.

4.7.7.3 Potential Organic-Nitrate Reactions Within Single-Shell Tanks. Eight tanks contain organic chemicals at concentrations believed to be potentially hazardous. Concentrations could be high enough to cause an exothermic reaction given a sufficient driving force, such as high waste temperatures. However, the difference between ignition temperatures and actual tank temperatures measured is so large that the probability of such a reaction is considered to be very low. None of the tanks have waste temperatures exceeding 65 °C (149 °F).

These eight organic waste tanks have been determined from tank waste transfers, flowsheet records, and from the limited analytical data. The tanks are declared organic tanks if the waste contains greater then 10% (dry weight) of organic salts. Many organic chemicals, if present in concentrations above 10% (sodium acetate equivalent), have the potential to react with nitrate-nitrite constituents at temperatures above 200 °C (392 °F) in an exothermic manner. The consequences of the postulated reaction are about the same as that postulated for a crust ignition after ignition of hydrogen in a tank. The eight tanks and their respective waste temperatures are listed in Table 4-7.

Table 4-7. Tanks Containing Concentrations of Organic Salts ≥10% Total Organic Carbon.

Tank	Temperature[a]		Tank	Temperature[a]	
	°C	°F		°C	°F
103-B	16	60	105-TX	40	104
103-C	49	120	118-TX	24	75
102-S	42	108	106-U	30	86
106-SX	47	116	107-U	27	80

[a]As of March 1992.

4.7.7.4 High Heat Generating Single-Shell Tanks. Eleven SSTs contain waste that generates heat loads greater then 11,700 W (40,000 Btu/h). One SST, Tank 106-C, requires periodic water addition to maintain its temperature within the permissible limits determined by structural considerations. Tank 106-C has been used for waste storage since 1947 and currently contains 870 m^3 (230,000 gal) of waste. During the late 1960's, a program to recover strontium and cesium from aging stored waste in the A and AX Tank Farms was started. Sludge washing and decanting steps in this process inadvertently transferred heat-generating, strontium-rich sludge to Tank 106-C. The tank waste currently generates 44,000 W (150,000 Btu/h) or 29.3 W/ton (100 Btu/h/ton) of waste. This is 3 times the heat output of any of the other 10 high-heat tanks. If the current methods of cooling Tank 106-C are stopped, the sludge temperatures may exceed established limits and may cause tank structural damage and possibly an unacceptable radioactive release to the environment (Wilson 1991). Table 4-8 outlines the 11 high-heat tanks with their respective waste temperatures and heat outputs.

Table 4-8. High-Heat Tanks with >40,000 Btu/h.

Tank	Temperature[a]		Heat load[b]		Tank	Temperature[a]		Heat load[b]	
	°C	°F	(kW)	(Btu/h)		°C	°F	(kW)	(Btu/h)
104-A	89	192	15	50,000	109-SX	69	156	15	50,000
105-A	60	140	15	50,000	110-SX	81	178	12	42,000
105-C[c]	37	99	12	42,000	111-SX	88	190	13	44,000
106-C[c]	82	180	44	150,000	112-SX	67	153	13	43,000
107-SX	79	175	12	42,000	114-SX	86	187	17	58,000
108-SX	92	198	13	45,000				17	

[a]As of March 1992.
[b]As of April 1989.
[c]Periodic water additions for cooling are required.

4.8 WASTE CHARACTERIZATION CAPABILITIES

The UST waste at the Hanford Site is being characterized primarily by laboratory analysis of core samples taken from individual tanks and computer modeling of tank waste.

4.8.1 Tank Core Samples

Core sampling of SST waste in six TY tanks was conducted in 1985. Problems with the tank sampling equipment were encountered, and recovery of the waste from these tanks was generally unsatisfactory. The average recovery was only 55% of the original sample. Quality core samples require the recovery of at least 80% of the original sample. This unsatisfactory recovery of the waste cores from the tanks precluded statistical evaluation of subsequent analytical results. However, significant improvements in tank sampling equipment were made from lessons learned in 1985. Acceptable core samples have been taken in every year since then except for 1987. No samples were taken in 1987 due to funding constraints.

Core samples are obtained by a special sampling truck and support equipment. They are drilled from the surface through one of the tank risers via a rotary core sampling mechanism. The cores are divided into multiple segments. Each segment is 48.3 cm (19 in) long by 2.54 cm (1 in) in diameter. The number of segments in a core sample range from 1 to 19, with 5 being the average. Each segment of the core is kept in a radiation shielded container after being extracted from the tank. Using this method, samples of liquids, slurries, and sludges can be taken at any prescribed depth in the USTs.

About half of the SSTs contain hard, crusty solids that are difficult to sample. This hard waste is usually at the bottom of the tank. Problems are encountered because the core sampling bit tends to plug, resulting in an inadequate amount of sample for analysis.

There are a few problems in the sampling of liquids, supernatant, slurries, and sludges. The primary problem is the use of normal paraffin hydrocarbons (NPH) as a hydrostatic fluid. The NPH is usually required to lubricate the segment container mechanisms to retain the core sample, but its use can interfere with needed organic analysis done on the samples.

Core samples are taken to either the Westinghouse Hanford Company 222-S Laboratory or the Pacific Northwest Laboratory 325 Laboratory. Samples are broken down and extruded from the segment containers in a laboratory hot cell, which is heavily shielded to protect laboratory personnel from radioactive exposure. All sample preparation and analysis is done in the hot cell using remotely controlled mechanical arms and sacrificed laboratory equipment. The laboratory technicians perform visual and physical measurements on the extruded samples, homogenize the sample, and prepare sub-samples to be dispensed to the analytical chemistry sections for analysis. It is estimated that the total cost for the sampling, analysis, and storage of each core can reach $500,000. Over 100 different analyses are performed on each core. The Hanford Site's capacity for analyses is currently limited to 24 cores per year. Under the Tri-Party Agreement, two core samples have to be

taken from each SST. Core samples are also being taken from DSTs, such as 101-SY, to determine their composition. Table 4-9 provides a summary of hot cells at the Hanford Site.

Table 4-9. Summary of Current Hot Cells at the Hanford Site.

Hot cell type	Building location	Laboratory name	Number of hot cells	Organization responsible for cell facilities
Analytical	222-S	Analytical Lab	7	Westinghouse Hanford Company
	325-B	Shielded Analytical	8	PNL
Metallurgical	324	Shielded Materials	2	PNL
	327	Post Irradiation Testing	12	PNL
	FMEF	Fuel Material Examination	17	Westinghouse Hanford Company
Radiochemical	324	Radiochemical	4	PNL
	325-A	HL Radiochemistry	3	PNL
	225-B	WESF	7	Westinghouse Hanford Company

FMEF = Fuels and Materials Examination Facility.
HL = High-level.
PNL = Pacific Northwest Laboratory.
WESF = Waste Encapsulation and Storage Facility.

4.8.2 Track Radioactive Components

Radioactive wastes have been stored in USTs since 1943; however, until the 1970's, estimates of waste inventories in tanks were calculated manually. With the advent of computer technology, this manual system was replaced by the track radionuclide components (TRAC) computer model. The TRAC uses estimates of radionuclides generated by reactor operations and historical knowledge. Information from known process history, tank chemistry, radioactive decay laws, tank transfer records, and known physical, chemical, and radiological properties also are included. The TRAC provides estimates of the quantities of 68 radioactive and 36 stable chemical components and their location by tank (Morgan et al. 1988).

4.9 UNDERGROUND STORAGE TANK WASTE CHEMICAL CHARACTERISTICS

The chemical composition of the different waste forms has currently been derived from records of fuel elements processed, chemicals used, and a limited number of waste samples analyzed. The estimated chemical concentrations of the various waste forms is shown in Table 4-10.

Table 4-10. Hanford High-Level Waste Chemical Composition (wt%) (ORNL 1991).

Component	Supernatant	Sludge	Salt cake	Slurry
$NaNO_3$	20.8	25.3	81.5	14.8
$NaNO_2$	15.8	3.8	1.7	5.6
Na_2CO_3	0.6	2.2	0.5	1.9
NaOH	6.2	5.3	1.5	7.0
$NaAlO_2$	12.5	1.2	1.4	5.6
NaF	--	--	--	0.4
Na_2SO_4	--	1.0	1.3	0.3
Na_3PO_4	2.3	15.8	1.6	0.8
KF	--	--	--	0.4
FeO(OH)	--	1.3	--	0.2
Organic Carbon	0.17	--	--	1.2
NH_4^+	--	--	--	0.08
$Al(OH)_3$	--	2.9	--	4.9
$SrO \cdot H_2O$	--	0.1	--	--
Na_2CrO_4	1.3	--	--	--
$Cr(OH)_3$	--	0.2	--	0.02
$Cd(OH)_2$	--	0.1	--	--
$Ni(OH)_2$	--	--	--	<0.1
$BiPO_4$	--	0.5	--	--
Cl^-	--	0.1	--	--
$Ni_2Fe(CN)_6$	--	0.6	--	--
$P_2O_5 \cdot 24(WO_2) \cdot 44(H_2O)$	--	<0.1	--	--
$ZrO_2 \cdot 2(H_2O)$	--	0.5	--	0.2
Fission Products	--	--	--	<0.01
H_2O	40.2	33.6	10.5	56.2
Others	<0.1	5.5	--	<0.01
Hg^+ (ppm)	--	0.12	--	--
Total	100.0	100.0	100.0	100.0
Density (g/ml)	1.6	1.7	1.4	~1.3

As can be seen, the waste contains large amounts of sodium salts, especially nitrate and nitrite. There are also several metal hydroxide precipitates, especially aluminum and iron. Both the salts and the hydroxides were formed primarily from the neutralization of the process waste before storage in the USTs. As stated, these compositions are based on a limited number of waste samples analyzed; thus, the compositions are somewhat uncertain.

Using this information and estimated amounts of sludge, salt cake, supernatant, and slurry in the tanks, the estimated total mass of UST constituents were calculated (see Table 4-11). Estimates of chemical totals for individual tanks can be found in Table A-2.

The existing tank waste contains a number of organic compounds that were used by the Hanford Site chemical processing facilities. Due to the thermal and radiolytic history of the waste, it is likely that a significant fraction of the organic materials may have decomposed or polymerized.

Most of the organic compounds in the waste were introduced as chelating agents for strontium recovery at the B Plant. The chelating agents used at the B Plant were hydroxyacetic acid, citric acid, hydroxyethylethylenediamine-tetraacetic acid, and ethylenediaminetetriacetic acid.

Many of the chemical separation processes are based on extraction of the desired species from an aqueous solution by an organic solvent. Because of this, trace quantities of organic solvents are present in the waste. Organic solvents previously used at the Hanford Site include di(2-ethylhexyl) phosphoric acid, hexane, tributyl phosphate, NPH, and carbon tetrachloride.

Sodium gluconate was introduced into the waste by the B Plant solvent cleanup process. Sugar (sucrose) was used by PUREX for HNO_3 destruction. Most of the sugar was decomposed by this process.

Equipment decontamination operations at the T Plant consumed a variety of chemicals and commercial cleaning agents. The organic constituents that were used at the T Plant include the following: alcohols, organic acids, aliphatics, chlorinated aliphatics, aromatics, chlorinated aromatics, amines, ketones, esters, and acetates. However, the quantity of organic material disposed of to the tanks is small relative to the total quantity of aqueous waste generated by T Plant.

4.10 UNDERGROUND STORAGE TANK WASTE RADIOLOGICAL CHARACTERISTICS

As stated in previous sections, the principal radionuclides in the tank waste include uranium and plutonium isotopes, other TRUs, fission products ^{137}Cs and ^{90}Sr, and decay daughters. Radioactive decay within the waste causes elevated waste temperatures, sometimes exceeding 82 °C (180 °F). Water additions are required for two tanks to keep waste temperatures below the tank design criteria. This decay also produces radiation fields within the tanks exceeding 1,000 rad/h in some tanks. Specific activities of the different wastes vary from 0.13 to 0.85 Ci/L (0.49 to 3.2 Ci/gal) for supernatant, salt cake, and slurry, to over 2.5 Ci/L (9.5 Ci/gal) for sludge. Estimates of the radionuclide content in the SSTs and the DSTs are presented in Tables 4-12

Table 4-11. Estimated Hanford Tank Chemical Mass Totals.

Component	Mass		Percent
	(kg)	(lb)	
CO_3^{-2}	2,004,000	4,418,000	0.6
Cl^-	85,280	188,000	0.0
F^-	31,300	69,000	0.0
OH^-	8,732,000	19,250,000	2.5
NO_3^-	112,390,000	247,700,000	32.1
NO_2^-	17,030,000	37,560,000	4.9
PO_4^{-3}	11,050,000	24,390,000	3.2
SO_4^{-2}	1,753,000	3,864,000	0.5
Al	7,257,000	16,000,000	2.1
Cr	551,200	1,223,000	0.2
Fe	833,400	1,845,000	0.2
Ni	199,600	440,000	0.1
K	26,760	59,000	0.0
Na	74,610,000	164,500,000	21.3
Others	15,110,000	33,310,000	4.3
Organics	327,000	721,000	0.1
H_2O	98,510,000	217,200,000	28.1
Totals	350,500,540	772,737,000	100.2

and 4-13, respectfully. This information was derived from the TRAC model assuming a decay time to 1990. Radiological totals for individual SSTs are listed in Table A-3.

4.11 FACILITIES FOR PROCESSING RETRIEVED TANK WASTE

The Hanford Site UST radioactive waste will be transferred from the tanks to a pretreatment plant. The waste will be separated into a high-level radioactive stream and a low-level radioactive stream. The purpose of the pretreatment is to reduce the volume of HLW, achieving cost savings for final disposal. The LLW from the SSTs and DSTs will be mixed with a cement-like material to form "grout," as part of the Grout Treatment Facility. The grout will be poured into underground vaults and allowed to harden. At least 44 vaults will be filled for the disposal of single- and double-shell tank waste. Each will hold 5,300 m^3 (1.4 Mgal) of grout. A test vault was completed in 1988. Fourteen vaults are scheduled to be filled by 1996. The remaining vaults will be filled as waste becomes available.

Table 4-12. Estimated Hanford Single-Shell Tank Radionuclide Content.

Radionuclide	Activity	Mass	
	(Ci)	(kg)	(lb)
^{239}Pu	21,420	346.00	761.00
^{238}Pu	1,151	0.05	0.10
^{238}U	474	1,408,000.00	3,104,000.00
^{235}U	20	9,260.00	20,423.00
^{137}Ba	27,710,000	0.00	0.00
^{137}Cs	29,290,000	338.00	746.00
^{90}Sr	55,270,000	401.00	883.00
^{90}Y	55,280,000	0.10	0.22
Others	1,153,000	9.10	20.00
Totals	168,726,065	1,418,354.25	3,126,833.32

Table 4-13. Estimated Hanford Double-Shell Tank Radionuclide Content.

Radionuclide	Activity	Mass	
	(Ci)	(kg)	(lb)
^{238}U	3.0	8,890.00	19,600.00
^{235}U	0.2	92.50	204.00
^{239}Pu	80.0	1.29	2.84
^{137}Cs	20,000,000.0	231.00	509.00
^{90}Sr	20,000,000.0	145.00	319.00
Others	400,000.0	324.00	715.00
Total	40,400,083.2	9,683.79	21,349.84

It is expected that high-level radioactive waste will be mixed with borosilicate glass and poured into stainless-steel canisters at the Hanford Waste Vitrification Plant. Construction of the plant started in April 1992. The canisters will be stored onsite until they can be shipped to a national repository and buried deep underground. An outline of present and future waste treatment operations is shown in Figure 4-17.

Figure 4-17. Treatment Operations for Hanford High-Level Waste.

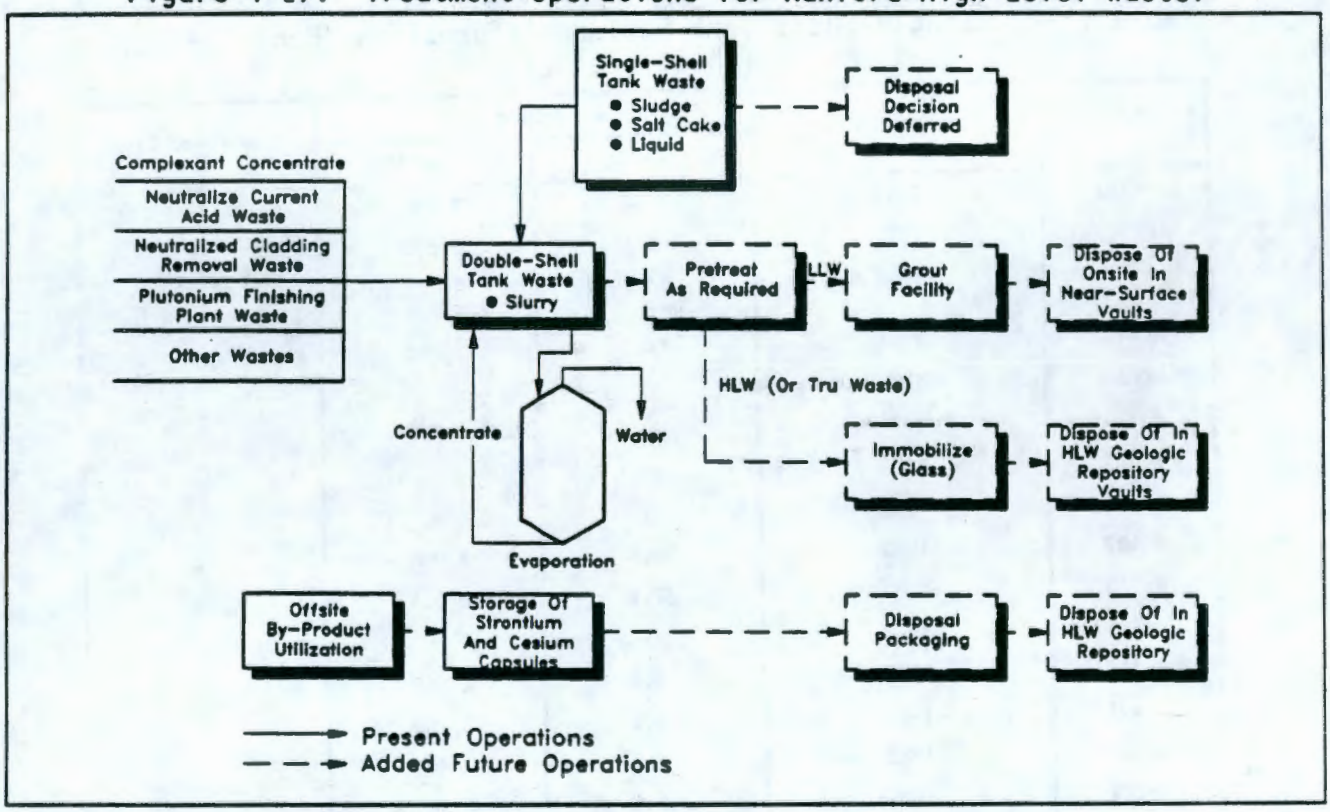

4.12 SOIL AND GROUNDWATER CONTAMINATION

Sixty-six of the SSTs have or are assumed to have leaked waste to the surrounding soil. None of the DSTs have leaked. There are no confirmed causes for any of the leaking tanks, but it is assumed to be a combination of mechanisms. Assumptions include stress corrosion cracking and mechanical tearing of the liner, especially at the knuckle region of the steel liner. Shifting of a tank liner was observed in 1956 and again in 1958. Table 4-14 outlines each of the assumed leaking tanks (Hanlon 1992). The leak estimates are based on waste level decreases within the tank or estimates based on other tanks with a similar age and waste. Some of the tanks have been declared leakers only because of the detection of radioactive material in the monitoring dry wells nearest the tank.

4.12.1 Leak Detection

Equipment provided for the prompt detection and confirmation of leaks in the USTs consists primarily of monitoring wells around the tanks. Newer tanks also have different types of access channels beside and underneath the tanks through which instruments may travel to monitor radiation level and temperature.

4.12.1.1 Monitoring Wells. The detection and measurement of radiation gives direct information relating to tank integrity, and in the event of tank failure, is used to locate the region (or regions) of failure. Monitoring wells located in the older tank farms are specifically designed for this purpose.

Table 4-14. Single-Shell Tank Failure Information (Hanlon 1992). (sheet 1 of 2)

Tank	Assumed leaker	Volume		Assumed Ci
		(m^3)	(gal)	
A-103	1987	20.8	5,500	--
A-104	1975	9.5	2,500	--
A-105	1963	37.9 to 1,049	10,000 to 227,000	85,000 to 760,000
AX-102	1988	11.4	3,000	--
AX-104	1977	--	--	--
B-101	1974	--	--	--
B-103	1978	--	--	--
B-105	1978	--	--	--
B-107	1980	30.3	8,000	--
B-110	1981	37.9	10,000	--
B-111	1978	--	--	--
B-112	1978	7.6	2,000	--
B-201	1980	4.5	1,200	--
B-203	1983	1.1	300	--
B-204	1984	1.5	400	--
BX-101	1972	--	--	--
BX-102	1971	265.2	70,000	50,000
BX-108	1974	9.5	2,500	500
BX-110	1976	--	--	--
BX-111	1984	--	--	--
BY-103	1973	<18.9	<5,000	--
BY-105	1984	--	--	--
BY-106	1984	--	--	--
BY-107	1984	57.2	15,100	--
BY-108	1972	<18.9	<5,000	--
C-101	1980	75.8	20,000	--
C-110	1984	7.6	2,000	--
C-111	1968	20.8	5,500	--
C-201	1988	2.1	550	--
C-202	1988	1.7	450	--
C-203	1984	1.5	400	--
C-204	1988	1.3	350	--
S-104	1968	90.9	24,000	--
SX-104	1988	22.7	6,000	--
SX-107	1964	<18.9	<5,000	--
SX-108	1962	9.1 to 132.5	2,400 to 35,000	140,000
SX-109	1965	37.9	<10,000	<40,000

Table 4-14. Single-Shell Tank Failure Information (Hanlon 1992). (sheet 2 of 2)

Tank	Assumed leaker	Volume		Assumed Ci
		(m^3)	(gal)	
SX-110	1976	20.8	5,500	--
SX-111	1974	7.6	2,000	2,000
SX-112	1969	113.6	30,000	40,000
SX-113	1962	56.8	15,000	8,000
SX-114	1972	--	--	--
SX-115	1965	189.4	50,000	40,000
T-103	1974	<3.8	<1,000	--
T-106	1973	435.6	115,000	40,000
T-107	1984	--	--	--
T-108	1974	<3.8	<1,000	--
T-109	1974	<3.8	<1,000	--
T-111	1984	<3.8	<1,000	--
TX-105	1977	--	--	--
TX-107	1984	9.5	2,500	--
TX-110	1977	--	--	--
TX-113	1974	--	--	--
TX-114	1974	--	--	--
TX-115	1977	--	--	--
TX-116	1977	--	--	--
TX-117	1977	--	--	--
TY-101	1973	<3.8	<1,000	--
TY-103	1973	11.4	3,000	700
TY-104	1981	5.3	1,400	--
TY-105	1960	132.6	35,000	4,000
TY-106	1959	75.8	20,000	2,000
U-101	1959	113.6	30,000	20,000
U-104	1961	208.3	55,000	90
U-110	1975	30.7	8,100	--
U-112	1980	32.2	8,500	--
Total*	--	3,419.2	902,750	1,147,290

*Totals use maximum leak values for each tank.

Tank monitoring wells consist of two general types:

- Open and dry wells sunk in groups in and around the tank farm
- Wells extending into the water table below a tank farm site.

Each SST is ringed with a series of dry wells that are 15.2 cm (6 in) in diameter, bottom open ended, and sunk approximately 22.9 m (75 ft) below grade. The opening of the casing is approximately 7.0 m (23 ft) below the elevation of the base slab of the tanks. Each dry well is located approximately 3.0 m (10 ft) from a tank. The dry wells can accommodate portable gamma and neutron detection devices.

Some wells are customarily sunk to levels below the surface of the water table underlying the tank farm site. Routine monitoring of these wells should detect radionuclides released to the soil in sufficient quantity to reach the water table.

4.12.1.2 Buried Horizontal Laterals. The buried horizontal lateral system for radiation detection and temperature measurement in the A and SX Tank Farms consists of 3.6 m (12 ft) diameter caissons sunk approximately 21.2 m (70 ft) below grade. From each caisson three laterals are bored horizontally under each tank bottom approximately 3.0 m (10 ft) below the base pad elevation.

The insertion of temperature and radiation probes into each lateral for a given tank provides profiles which are used in the evaluation of tank integrity and for the determination of changing conditions in the tank contents.

4.12.2 Leak Collection

The AX SST farm provides a system of drain channels in the concrete base slab immediately below the carbon steel tank liner. The channels drain to a 61.0-cm- (24-in.-) diameter, 18.2-m- (60-ft-) deep well from which leakage can be pumped. A radiation detection well is located adjacent to this sump type system to detect any leakage to soil.

The AY, AZ, and SY DST farms also have drain channels in the insulating material installed between the steel and concrete before the thermal stress-relieving operation on the inner tank liner. These channels could carry leakage to the annular space between the inner and outer liners. Detection during operation is provided by conductivity probes in the annulus and by radiation alarms in the exhaust system.

4.13 REFERENCES

Anderson, J. D., 1990, *A History of the 200 Area Tank Farms*, WHC-MR-0132, Westinghouse Hanford Company, Richland, Washington.

Babad, H., J. L. Deichman, and D. D. Wodrich, 1991, *Hanford Tank Safety Issues: A Program Overview*, WHC-SA-1215-A, Westinghouse Hanford Company, Richland, Washington.

Boomer, K. D., 1991, *Systems Engineering Study for the Closure of Single-Shell Tanks*, WHC-EP-0405, Vol. 1, Draft A, Westinghouse Hanford Company, Richland, Washington.

Borsheim, G. L. and N. W. Kirch, 1991, *Summary of Single-Shell Tank Waste Stability*, WHC-EP-0347, Westinghouse Hanford Company, Richland, Washington.

DOE, 1987, *Final Environmental Impact Statement, Disposal of Hanford Defense High-Level, Transuranic and Tank Wastes*, DOE/EIS-0113, Vol. 1, U.S. Department of Energy, Washington, D.C.

Ecology, EPA, and DOE, 1989, *Hanford Federal Facility Agreement and Consent Order*, Washington State Department of Ecology, U.S. Environmental Protection Agency, and U.S. Department of Energy, Olympia, Washington.

ERDA, 1975, *Final Environmental Statement, Waste Management Operation, Hanford Reservation, Richland, Washington*, ERDA-1538, U.S. Energy Research and Development Administration, Washington, D.C.

Hanlon, B. M., 1992, *Tank Farm Surveillance and Waste Status Report for March 1992*, WHC-EP-0182-48, Westinghouse Hanford Company, Richland, Washington.

Klem, M. J., 1991, *Vapor Space Sampling Criteria for Single-Shell Tanks Containing Ferrocyanide Waste*, WHC-EP-0424-00, Westinghouse Hanford Company, Richland, Washington.

Krieg, S. A., W. W. Jenkins, K. J. Leist, K. G. Squires, and J. F. Thompson, 1990, *Single-Shell Tank Waste Retrieval Study*, WHC-EP-0352, Westinghouse Hanford Company, Richland, Washington.

Morgan, L. G., W. W. Schulz, M. R. Adams, and K. W. Owens, 1988, *Summary of Single-Shell Tank Waste Characterization: 1985 to 1987*, WHC-EP-0075, Westinghouse Hanford Company, Pacific Northwest Laboratory, Richland, Washington.

ORNL, 1991, *Integrated Data Base for 1991: U.S. Spent Fuel and Radioactive Waste Inventories, Projections, and Characteristics*, DOE/RW-0006, Rev. 7, Martin Marietta Energy Systems, Inc., Oak Ridge, Tennessee.

PNL, 1983, *Climatological Summary for the Hanford Area*, PNL-4622, Pacific Northwest Laboratory, Richland, Washington.

PNL, 1989, *Hanford Site Environmental Report for Calendar Year 1988*, PNL-6825, Pacific Northwest Laboratory, Richland, Washington.

Price, W. H., and K. R. Fecht, 1976a, *Geology of the 241-A Tank Farm*, ARH-LD-127, Atlantic Richfield Hanford Company, Richland, Washington.

Price, W. H., and K. R. Fecht, 1976b, *Geology of the 241-AX Tank Farm*, ARH-LD-128, Atlantic Richfield Hanford Company, Richland, Washington.

Price, W. H., and K. R. Fecht, 1976c, *Geology of the 241-B Tank Farm*, ARH-LD129, Atlantic Richfield Hanford Company, Richland, Washington.

Price, W. H., and K. R. Fecht, 1976d, *Geology of the 241-BX Tank Farm*, ARH-LD-130, Atlantic Richfield Hanford Company, Richland, Washington.

Price, W. H., and K. R. Fecht, 1976e, *Geology of the 241-BY Tank Farm*, ARH-LD-131, Atlantic Richfield Hanford Company, Richland, Washington.

Price, W. H., and K. R. Fecht, 1976f, *Geology of the 241-C Tank Farm*, ARH-LD-132, Atlantic Richfield Hanford Company, Richland, Washington.

Price, W. H., and K. R. Fecht, 1976g, *Geology of the 241-S Tank Farm*, ARH-LD-133, Atlantic Richfield Hanford Company, Richland, Washington.

Price, W. H., and K. R. Fecht, 1976h, *Geology of the 241-SX Tank Farm*, ARH-LD-134, Atlantic Richfield Hanford Company, Richland, Washington.

Price, W. H., and K. R. Fecht, 1976i, *Geology of the 241-T Tank Farm*, ARH-LD-135, Atlantic Richfield Hanford Company, Richland, Washington.

Price, W. H., and K. R. Fecht, 1976j, *Geology of the 241-TX Tank Farm*, ARH-LD-136, Atlantic Richfield Hanford Company, Richland, Washington.

Price, W. H., and K. R. Fecht, 1976k, *Geology of the 241-TY Tank Farm*, ARH-LD-137, Atlantic Richfield Hanford Company, Richland, Washington.

Price, W. H., and K. R. Fecht, 1976l, *Geology of the 241-U Tank Farm*, ARH-LD-138, Atlantic Richfield Hanford Company, Richland, Washington.

Price, W. H., and K. R. Fecht, 1976m, *Generalized Geology of the 241-SY Tank Farm*, ARH-LD-139, Atlantic Richfield Hanford Company, Richland, Washington.

Trice, E., 1992, "Window C work may solve 101-SY hydrogen problem," *Hanford Reach*, Westinghouse Hanford Company, September 14, 1993, Richland, Washington.

Wilson, G. R., and I. E. Reep, 1991, *A Plan to Implement Remediation of Waste Tank Safety Issues at the Hanford Site*, WHC-EP-0422, Rev. 1, Westinghouse Hanford Company, Richland, Washington.

5.0 FERNALD ENVIRONMENTAL MANAGEMENT PROJECT, OHIO

This section provides a detailed description of the LLW silos at the FEMP in Fernald, Ohio. A general site description of the facilities, environmental conditions, fuel processing activities, and waste storage methods is provided. The information is based on referenced documents and interviews with Fernald Site personnel.

5.1 FERNALD ENVIRONMENTAL MANAGEMENT PROJECT INTRODUCTION AND HISTORY

The FEMP is a uranium metal production facility located in southwestern Ohio, approximately 18 mi (29 km) northwest of Cincinnati and 8 mi (12.9 km) southwest of Hamilton. It was formally known as the Feed Materials Processing Center prior to 1992. Figure 5-1 shows the FEMP location.

Figure 5-1. FEMP Site Location.

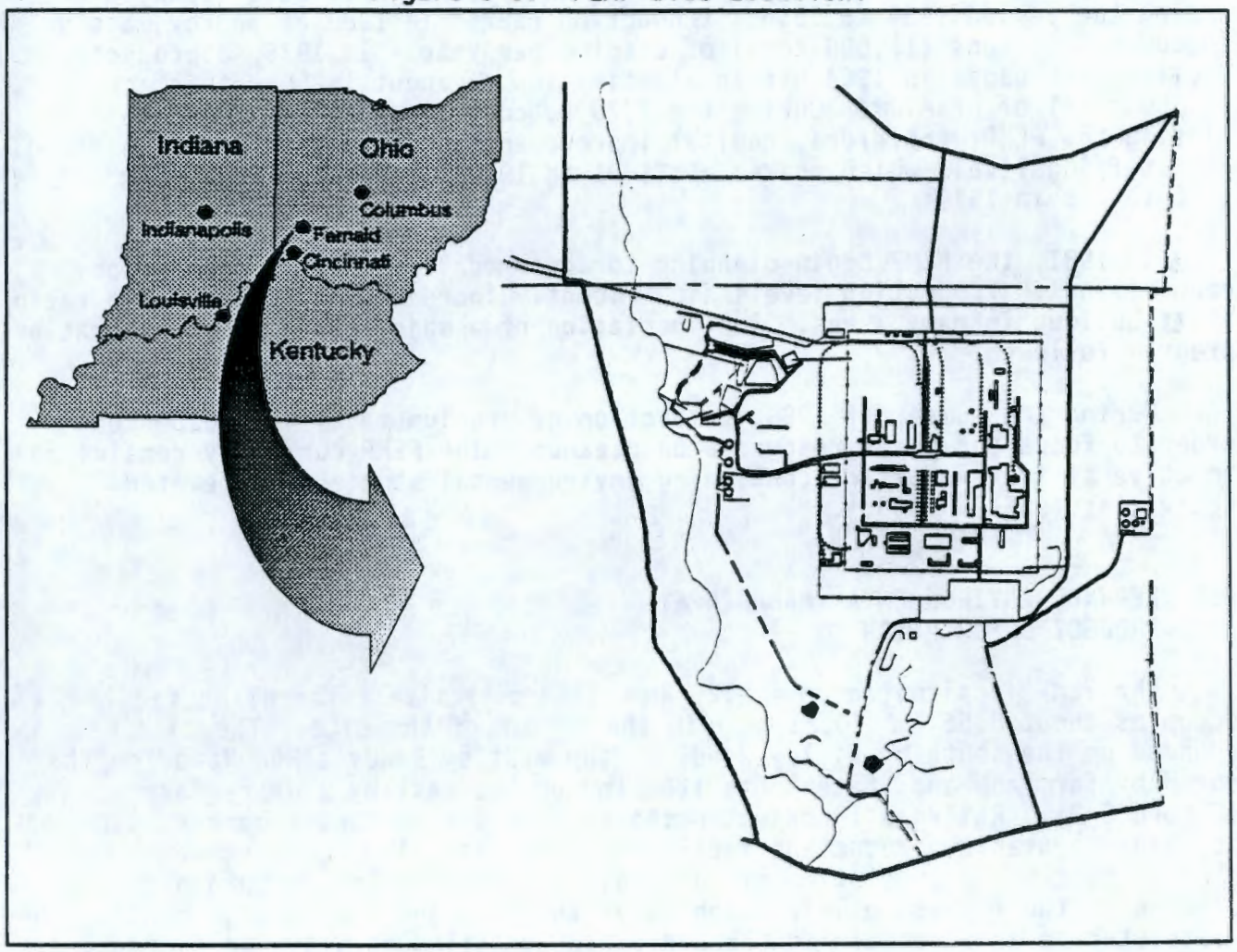

The following information was derived from the *Initial Screening of Alternatives for Operable Unit 5* (DOE-OR 1990a). The U.S. Atomic Energy Commission (AEC) established the FEMP for processing uranium and its compounds from natural uranium ore concentrates for U.S. Government needs. This production complex began operations in the early 1950's. In 1951, NLO, Inc. (formerly National Lead Company of Ohio), entered into a contract with the AEC as the Operations and Maintenance contractor. This contractual relationship lasted with the AEC, and eventually the DOE, until January 1, 1986. Westinghouse Materials Company of Ohio, a wholly-owned subsidiary of Westinghouse Electric Company, then assumed management responsibilities of the site operations and facilities for a minimum 5-yr period.

A pilot plant was completed in 1951 as the first operational facility at the FEMP. Following completion of the pilot plant, the Metals Production Plant began operations in 1952. The Metals Fabrication Plant, the Green Salt Plant, the Recovery Plant, the Sampling Plant, and the Ore Refinery began operations in 1953. The Hex Plant and the Special Products Plant were operational in 1954.

All plants except the Sampling Plant and Ore Refinery were expanded during the period 1954 to 1956. Production peaked in 1960 at approximately 10,000 metric tons (11,000 tons) of uranium per year. In 1975, a product decline that began in 1964 hit an all time low of about 1,250 metric tons (1,380 tons) of uranium. During the 1970's, consideration was given to closing the FEMP; therefore, capital improvements and staffing were minimized. The staffing level, which peaked at 2,891 in 1956, slowly declined from 662 in 1972 to 538 in 1979.

In 1981, the FEMP began planning to accommodate increased production requirements. Production levels significantly increased and there was a rapid staff buildup in many areas. Implementation of a major facilities restoration program followed.

During the summer of 1989, production of uranium metal was suspended in order to focus the plant resources on cleanup. The FEMP currently remains in inactive status except for continuing environmental studies and related activities (DOE-OR 1990c).

5.2 FERNALD ENVIRONMENTAL MANAGEMENT PROJECT DESCRIPTION

The FEMP is situated on a 4.25 km^2 (1.64 mi^2) site. The plant facility occupies about 0.55 km^2 (0.21 mi^2) in the center of the site. The site is bounded on the south by Willey Road, on the west by Paddy's Run Road, on the north by farmland and State Route 126, and on the east by a dairy farm (Figure 5-2). Railroad lines enter the site at the northwest corner. In addition to uranium production facilities, the site also contains waste storage facilities consisting of waste pits, storage silos, a burn pit, a clearwell, two fly ash piles, a sanitary landfill, and lime sludge ponds. The waste storage area containing the waste storage silos is shown in Figure 5-3.

Figure 5-2. FEMP Site Map

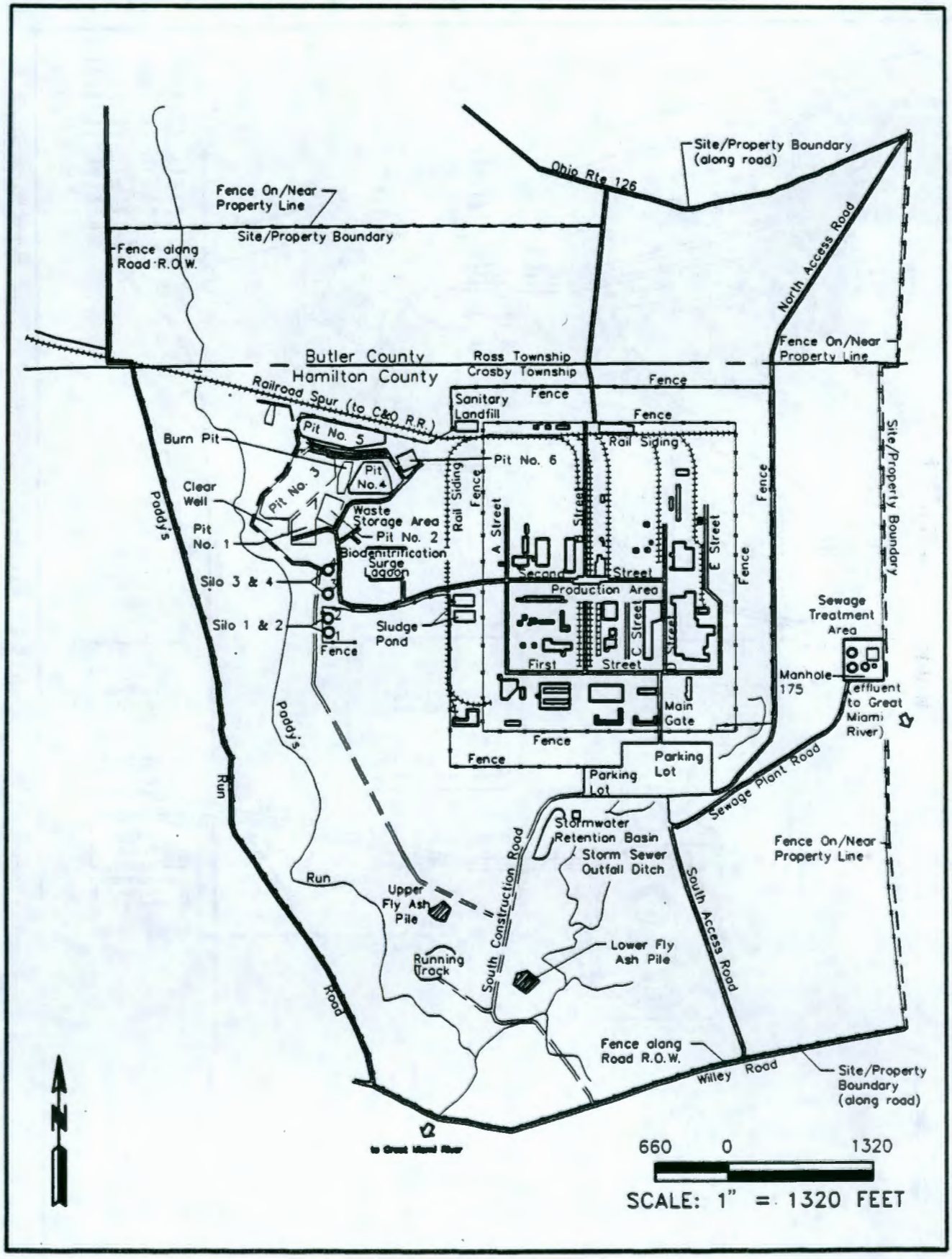

Figure 5-3. FEMP Silo Area.

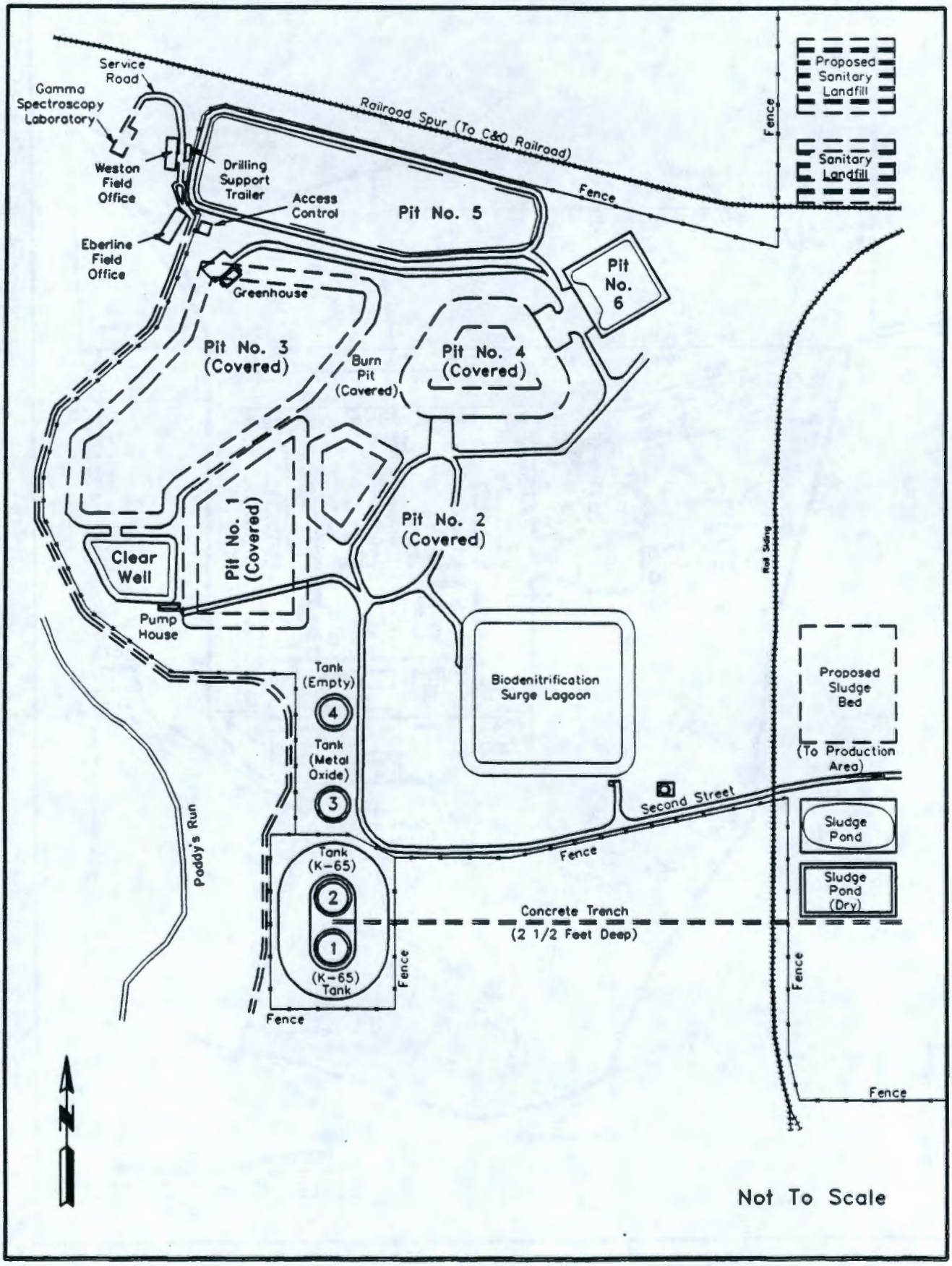

5.3 AMBIENT WEATHER AND CLIMATE CONDITIONS

The following information was taken from the *Feed Materials Production Center Installation Assessment* (Ferguson et al. 1986).

5.3.1 Climate

The climate of southwestern Ohio is continental, characterized by a wide range of temperatures from winter to summer. During the winter and spring, frequent changes in the weather occur in southwestern Ohio as cyclonic storms pass over the area. In the summer, rainfall is produced by the thunderstorms originating in the warm moist air that moves northward from the Gulf of Mexico along the Mississippi and Ohio valleys. The fall season is the period of minimum rainfall. There is an average of 185 days during the year when 80% of the sky is covered by clouds; the period of maximum cloudiness begins in November and continues through April. These are also the months when most precipitation is in the form of snow.

5.3.2 Precipitation

The average annual precipitation measured at the FEMP in the 17-yr period between 1960 and 1976 was 94.2 cm (37.05 in.). The annual precipitation has ranged from a low of 74.22 cm (29.22 in.) in 1963 to a high of 121.2 cm (47.72 in.) in 1973. Monthly totals ranged from a low of 0.10 cm (0.04 in.) in March 1962 to a high of 28.5 cm (11.15 in.) during March 1964. The maximum 24-h rainfall as measured at the Greater Cincinnati Airport was 13.2 cm (5.21 in.). There is an average of 44 days with thundershowers each year in southwestern Ohio, with 30 of these thundershower days occurring between May and August.

Heavy fog occurs an average of 20 days/yr. These days are evenly distributed throughout the year; the high is from September through November and the low is from April through June.

Annual snowfall at Hamilton, which is approximately 16.1 km (10 mi) from the FEMP, averaged 38.9 cm (15.3 in.) over a 29-yr period. The Greater Cincinnati Airport averaged about 61 cm (24 in.) over a 29-yr period.

5.3.3 Winds

Prevailing winds at the Greater Cincinnati Airport are from the south-southwest for all 12 months of the year. Average monthly wind speeds range from 10.8 km/h (6.7 mi/h) in August to 18 km/h (11.2 mi/h) in March. Wind records at the FEMP indicate that gusts greater than 96.5 km/h (60 mi/h) have occurred on two occasions.

Ohio lies on the eastern edge of a region of maximum tornado frequency. About 90% of the tornados observed in Ohio come from the west-southwest direction. Only one tornado, which occurred May 10, 1969, is known to have been encountered at the FEMP. There was no damage to the FEMP property.

5.3.4 Temperatures

Average daily temperatures range from 21 °C (70 °F) in the summer to 0 °C (32 °F) in the winter months. The frost-free period is approximately 190 days and extends from the middle of April to late October. There is a 70% chance that temperatures less than -17.7 °C (0 °F) will occur at the FEMP in any year. Over a 30-yr period at the Greater Cincinnati Airport, the highest temperature recorded was 38.9 °C (102 °F) in August 1962. The record low was -3.9 °C (-25 °F) on January 18, 1977.

5.4 GEOLOGICAL AND HYDROLOGICAL CONDITIONS

The following discussion was taken from the *Feed Materials Production Center Annual Environmental Report for Calendar Year 1989* (DOE-OR 1990e).

At the FEMP, nearly 15 m (49 ft) of clay-rich till, generally described as silty clay loam, overlie sand and gravel. Till is a mixture of unstratified clay, sand, and gravel that was deposited by glaciers during the ice age. North of the site, near Route 126, the till deposits directly overlie the bedrock. South of the site, Paddy's Run has eroded some of the till, exposing the sand and gravel aquifer underneath.

The sand and gravel deposits are about 5.4 km (3 mi) wide and 46 m (151 ft) deep, and fill the remains of an ancient river valley that was cut into the bedrock. The Great Miami River presently flows through these deposits. Sand and gravel deposits often hold water, and in fact the area under the FEMP and vicinity is part of a large aquifer system in southwestern Ohio (Figure 5-4). This aquifer is a major source of fresh water for industries and residences. More than 60 m (200 ft) below the surface of the FEMP lies bedrock consisting of alternating layers of limestone and shale (Figure 5-5).

Groundwater does not flow in the till as easily as it flows in the sand and gravel aquifer. Movement rates in the till near the waste pit area in the northwest corner of the site are about 4.3 to 6.7 m/yr (14 to 22 ft/yr). This can be compared to movement rates of 27 to 61 m/yr (90 to 200 ft/yr) in the sand and gravel aquifer. In addition, flow directions are not as uniform in the till as in the sand and gravel aquifer because of the topography. Hills, gullies, woods, and other features, including the composition of the till itself, affect the water flow in the till.

As shown in Figure 5-4, the groundwater in the sand and gravel aquifer is moving east under the waste pit and production area, while on the southern edge of the facility the groundwater moves to the south. These groundwater flow data are used to track and forecast the movement of contaminants which may be found in the aquifer.

5.5 PROCESS HISTORY

The following discussion of the refining process and handling of the K-65 residues was taken from the *Remedial Investigation Report for Operable Unit 4* (DOE-OR 1990c).

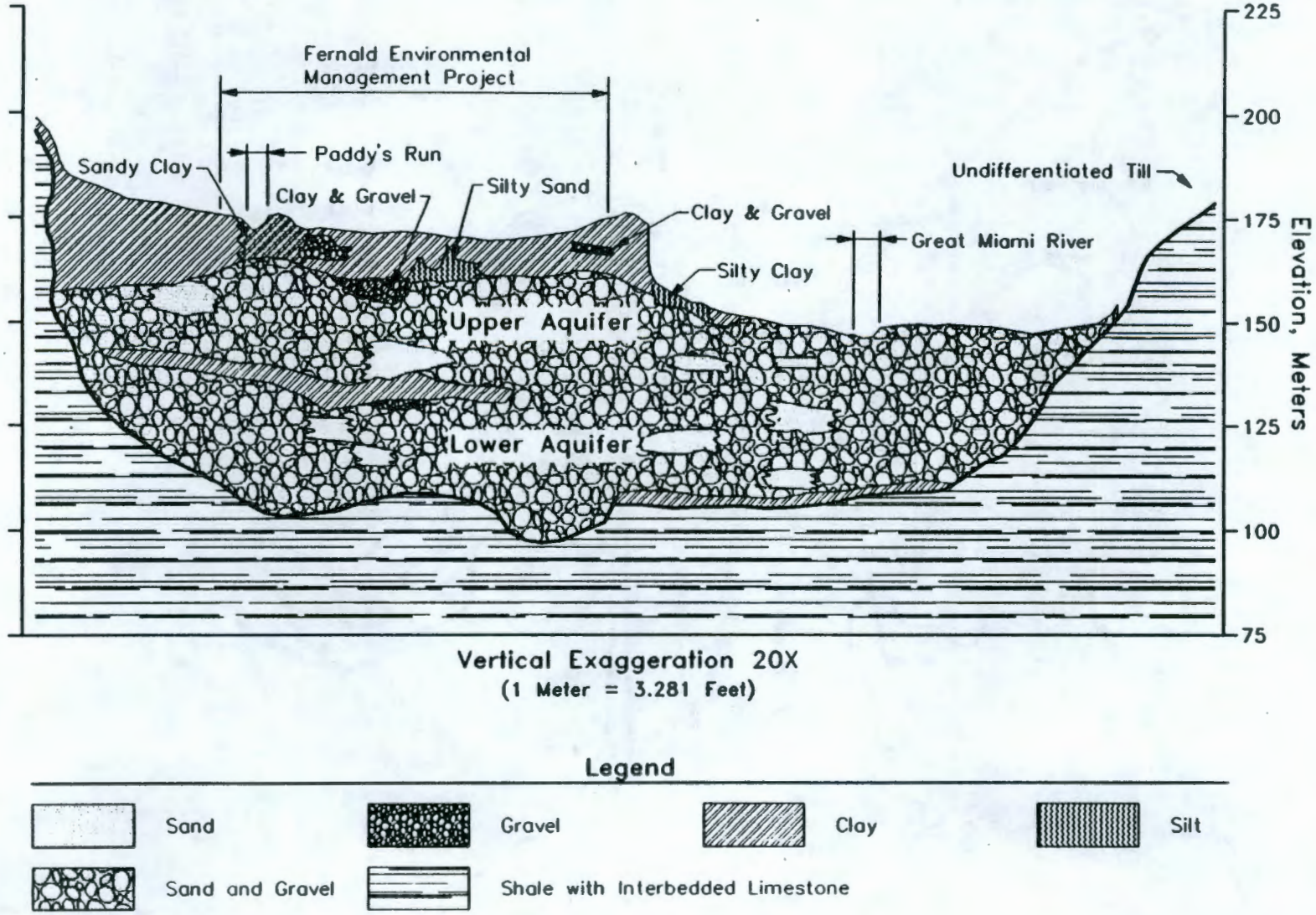

Figure 5-4. FEMP Buried Valley Aquifer.

Figure 5-5. FEMP Site Geological Cross Section

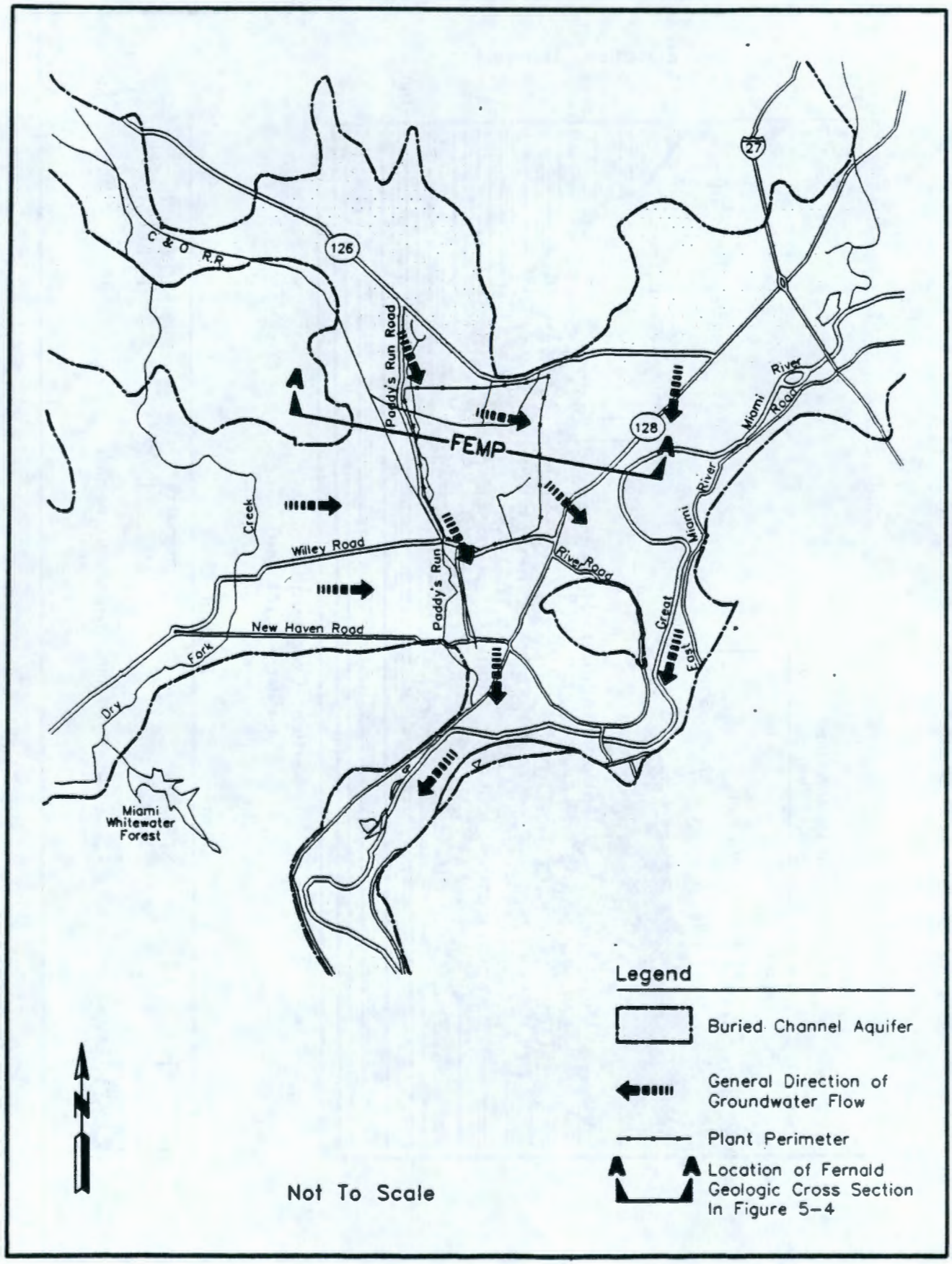

The silos were constructed to provide storage for the residues resulting from processing pitchblende ore and concentrates to extract their uranium content. The term K-65 refers specifically to various radium-bearing raffinate wastes generated during the extraction step of the processing of pitchblende and other radium-bearing ores.

A schematic flow diagram of the refinery process is presented in Figure 5-6. The FEMP used the TBP-kerosene extraction system.

Feed material to the Ore Refinery consisted of either naturally occurring ore, such as pitchblende, or a concentrate made by a preliminary milling process. The feed material specifications and typical compositions are presented in Table 5-1 (Harrington and Ruehle 1959). The process was also designed to handle scrap metals generated onsite or received from other sources (DOE-OR 1990c).

Table 5-1. Analysis of Typical Uranium Concentrates.

Constituent	African concentrates		Australian concentrates
	Belgian Congo	South Africa	
U_3O_8 (%)	48 - 73	75 - 85	55 - 70
H_2O (%)	0.1 - 0.5	--	0.2 - 0.5
As (%)	<0.02	<0.10	0.02 - 0.2
B (ppm)	80 - 600	20	4 - 40
Cu (%)	0.4 - 2	0.4	0.01 - 1
Halides (%)	0.02 - 0.03	0.03	0.05 - 0.15
Fe (%)	0.4 - 4	>0.4	>4
MoO_3 (%)	0.2 - 0.6	0.01	0.01 - 0.08
P_2O_5 (%)	0.25 - 0.7	0.06	0.1 - 1
Na (%)	0.07 - 2	0.04 - 0.2	~2
SO_4^{-2} (%)	1 - 37	1 - 5	0.5 - 2.5
V_2O_5 (%)	0.002 - 0.004	<0.002	<0.002

Source: Harrington and Ruehle 1959.

When the plant was designed, a substantial amount of radium-bearing pitchblende was anticipated as feed material. Hence, equipment for handling both hot and cold feeds was provided. The radium-bearing feeds did not require different chemical treatment, but the radioactivity hazard required that equipment for handling these materials be shielded. Because the purchase contracts specified that the vendor retain title to the radium-bearing raffinate, special equipment was required to handle and store the hot raffinate separately (Harrington and Ruehle 1959). As shown in Figure 5-7, cold raffinate from the primary extraction columns, after being washed with kerosene to remove residual solvent, was sent to a forced circulation

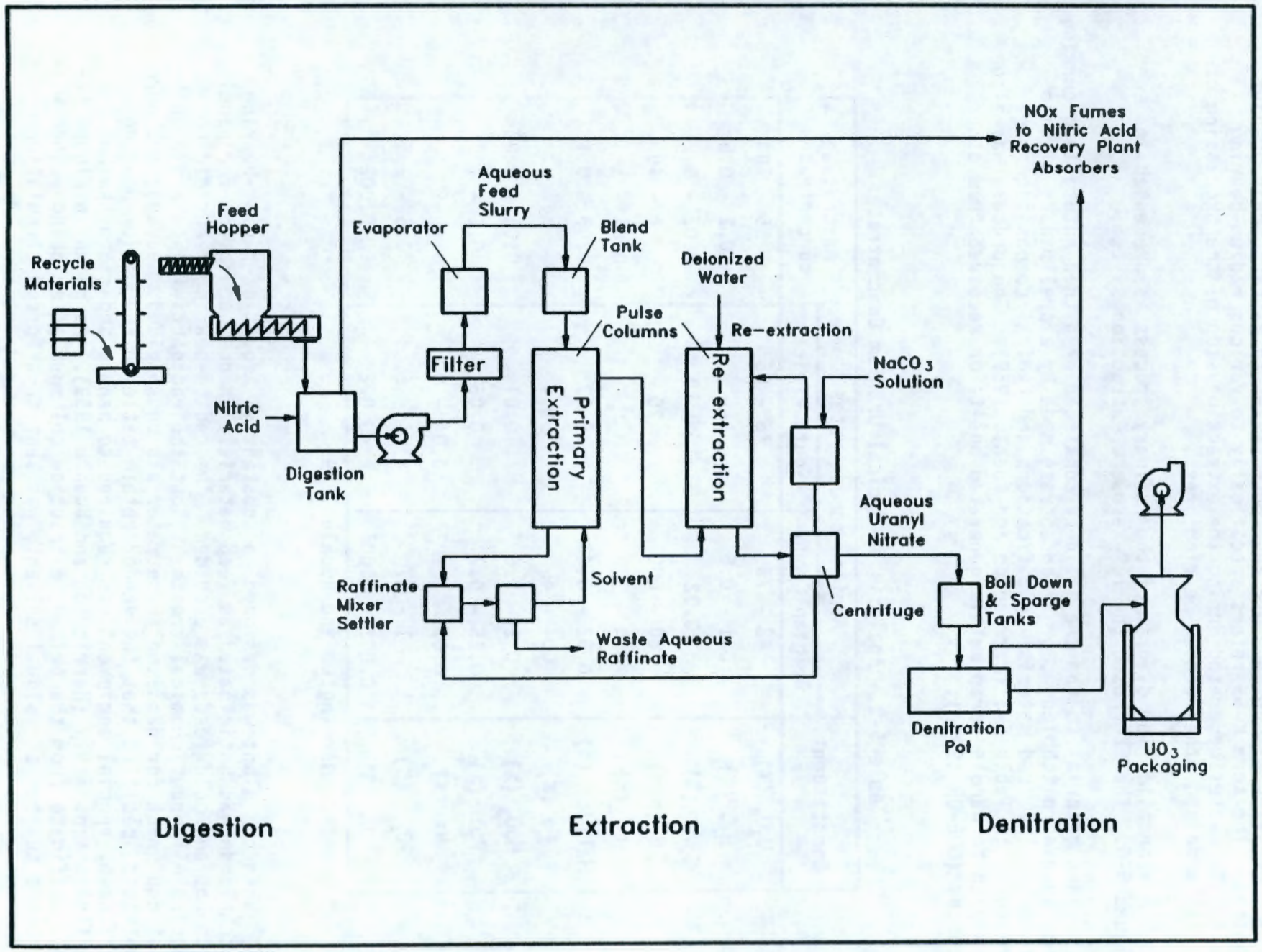

Figure 5-6. FEMP Refinery Process Flow.

Figure 5-7. FEMP Cold Raffinate Processing System.

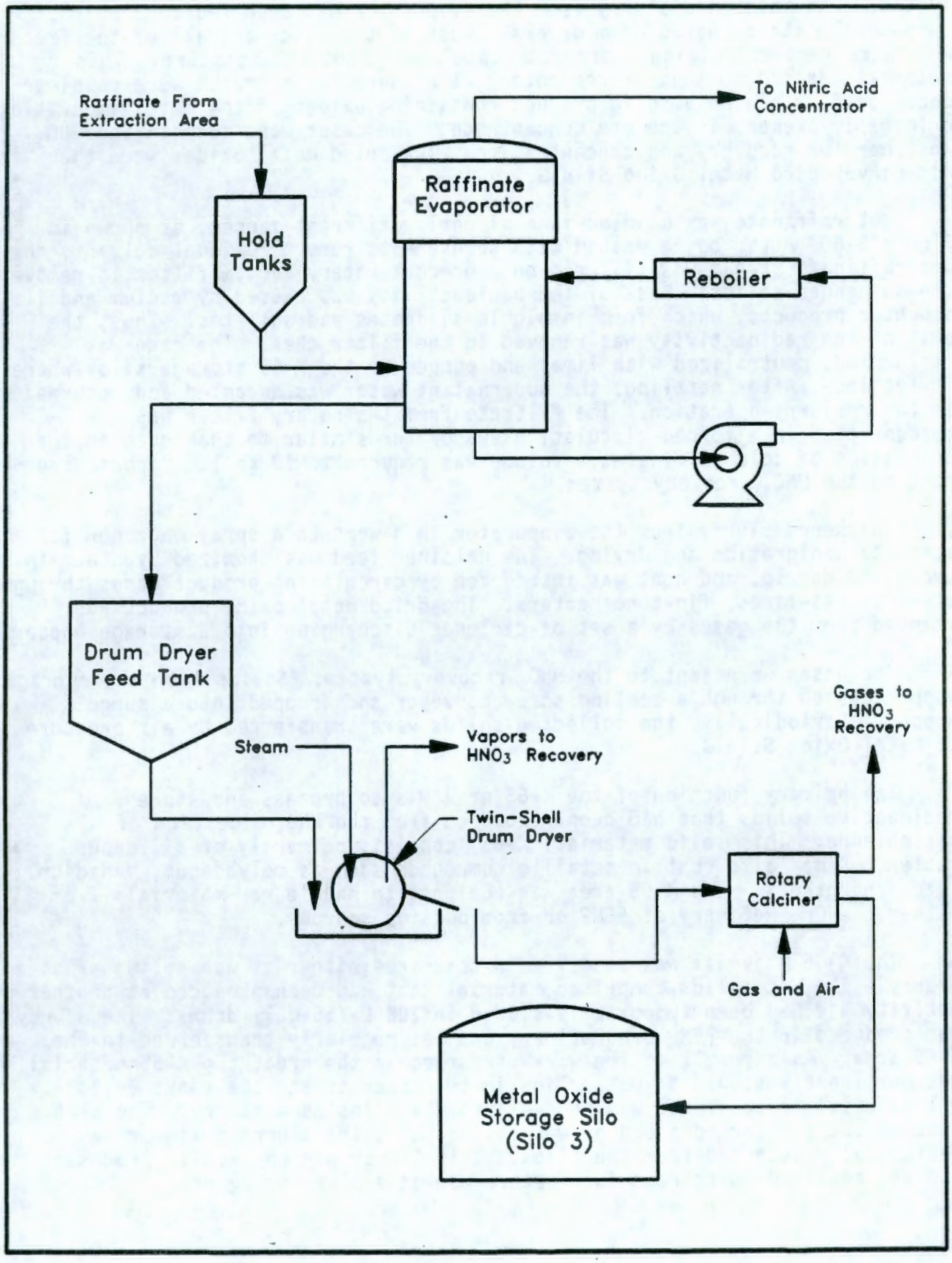

evaporator where the volume was reduced approximately 10 to 1. The vapor stream, containing approximately 23 wt% HNO_3, was sent to the HNO_3 recovery system. The thickened slurry from the evaporator was then fed to a pair of twin-shell, steam-heated drum dryers. Most of the water and all of the free HNO_3 were removed, giving a product containing about 10% moisture. This material was fed to a gas-fired rotary kiln where the nitrates were completely decomposed, yielding a solid product containing oxides of the metal impurities originally present in the ore concentrate. The gases were sent to the HNO_3 absorber for recovery and concentration. The dried metal oxides were then air-conveyed to Metal Oxide Silo 3.

Hot raffinate was handled in a slightly different manner, as shown in Figure 5-8. After being washed with kerosene to remove residual solvent, the hot raffinate stream was filtered on a precoat rotary vacuum filter to remove the suspended solids. Most of the radioactivity was caused by radium and its daughter products, which form insoluble silicates and sulfates. Thus, the bulk of the radioactivity was removed in the filter cake. The cake was reslurried, neutralized with lime, and pumped to the K-65 storage silos where it settled. After settling, the supernatant water was decanted and returned to the reslurry operation. The filtrate from the rotary filter was concentrated in a forced-circulation evaporator similar to that used in the processing of cold raffinates. Volume was reduced to 10 to 1. Vapors were sent to the HNO_3 recovery system.

Thickened slurry from the evaporator then went to a spray calciner for complete denigration and drying. The calciner feed was atomized by steam in a two-fluid nozzle, and heat was introduced by circulating product gases through a set of gas-fired, fin-tube heaters. The dried metal oxide product was removed from the gases by a set of cyclones discharging into a storage hopper.

The gases were sent to the HNO_3 recovery system. Solids from the storage hopper passed through a cooling screw conveyor and dropped into a surge hopper. Periodically, the collected solids were transferred by air pressure to Metal Oxide Silo 3.

The primary function of the K-65 area was to process and store radioactive solids that had been recovered from the HNO_3 digestion of pitchblende. This solid material, K-65, consists primarily of siliceous matter but may also contain metallic compounds such as molybdenum, vanadium, lead, and others. The K-65 area was equipped to handle raw materials from either the Ore Refinery at FEMP or from outside sources.

The K-65 material was received in this area either as wet solids or as a slurry. The wet solids comprised material that had been produced at another activity and had been temporarily stored in 208-L (55-gal) drums. The slurry was produced in the FEMP Ore Refinery and was regularly transferred to the K-65 area. As a result of the work performed in the area, the K-65 material was permanently stored as wet solids in two concrete storage tanks (silos). All material to be stored was pumped into the silos as a slurry. The K-65 settled out and formed a bed of wet solids while the slurring liquor was periodically decanted from the silos. This liquor was physically processed and was retained in storage for further use as a slurring agent.

Figure 5-8. FEMP Hot Raffinate Processing System.

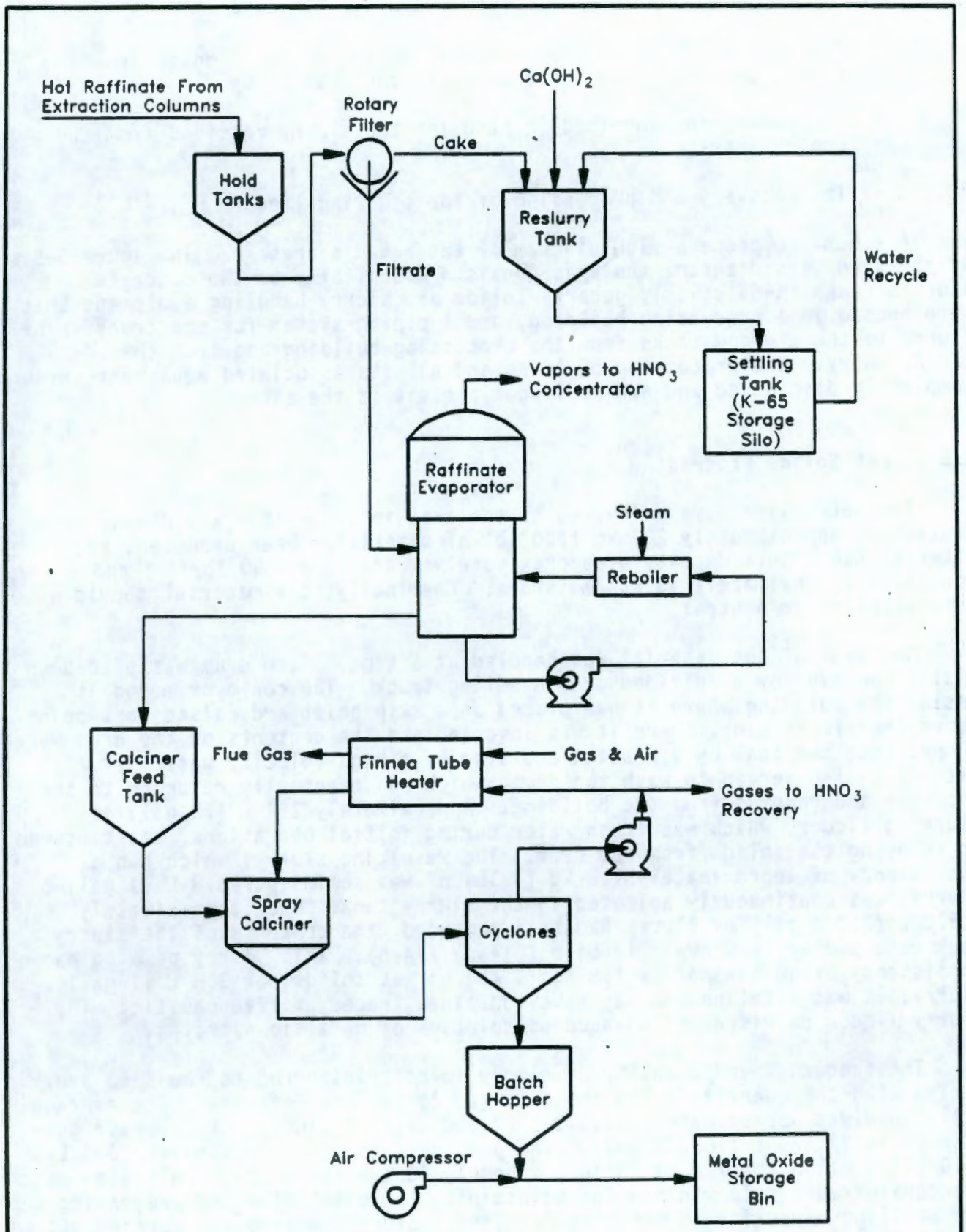

Source: Harrington and Ruehle, 1959

The storage and handling processes are discussed below under three categories:

- The methods by which the incoming wet solids are removed from the drums, slurried, and transferred to the K-65 Silos
- The processing involved in handling the slurry received from the Ore Refinery
- The recovery and processing of the slurring liquor.

A schematic process flow diagram of the area is presented in Figure 5-9. As shown on this diagram, the area consists essentially of two concrete storage tanks (K-65 silos), general solids and slurry handling equipment that were housed in a processing building, and a piping system for the transfer of slurry to the storage tanks from the processing building and from the Ore Refinery. The processing building and all its associated equipment were completely dismantled and are no longer present at the site.

5.5.1 Wet Solids Processing

The wet solids were delivered to the area in 208-L (55-gal) drums, each containing approximately 227 kg (500 lb) of material. When produced, the material had a bulk density of approximately 1,442 kg/m^3 (90 lb/ft^3) and contained approximately 40 wt% moisture. Chemically, the material should have been alkaline or neutral.

One drum of the material was handled at a time. Each drum was placed on a slat conveyor by a shielded drum handling truck. The conveyor moved it inside the building where it was placed on a skip hoist and raised to a point above the slurry tank. Here it was inverted and the contents of the drum were dumped into the tank by vibration and also by a high-velocity water jet. The water jet also served to wash the drum, which was eventually returned to the conveyor and removed from the building. Approximately 284 L (75 gal) of slurring liquor, which was fresh water during initial operations, was consumed in removing the solids from one drum. The resulting slurry, which had a consistency of approximately 1.8 kg (4 lb) of wet solids per 3.8 L (1 gal) of slurry, was continuously agitated in the slurry tank. When approximately 7,570 L (2,000 gal) of slurry had been produced, the contents of the slurry tank were pumped to storage in Silo 1 (Tank F34-6). This slurry pumping had a consistency of approximately 1.8 kg (4 lb) of wet solids per 3.8 L (1 gal) of slurry; it was alkaline and may have contained traces of free caustic. The slurry liquor consisted of an aqueous solution of metallic nitrates.

The frequency and quantity of slurry to be transferred to the K-65 area varied with the quantity of pitchblende fed to the Ore Refinery. The average daily load was approximately 15,140 L (4,000 gal) of slurry but may have gone as high as 37,859 L (10,000 gal). The pumping rate was approximately 6.9 L/s (110 gal/min) in the 7.6 cm (3 in.) schedule 80 transfer line. This flow rate was considered a safe minimum for maintaining turbulent flow and preventing the settling of solids in the transfer line. Slurry pumping was carried out once daily. Slurry pumping was followed by a clear liquor wash amounting to 4,542 to 5,678 L (1,200 to 1,500 gal) of the recovered nitrate solution.

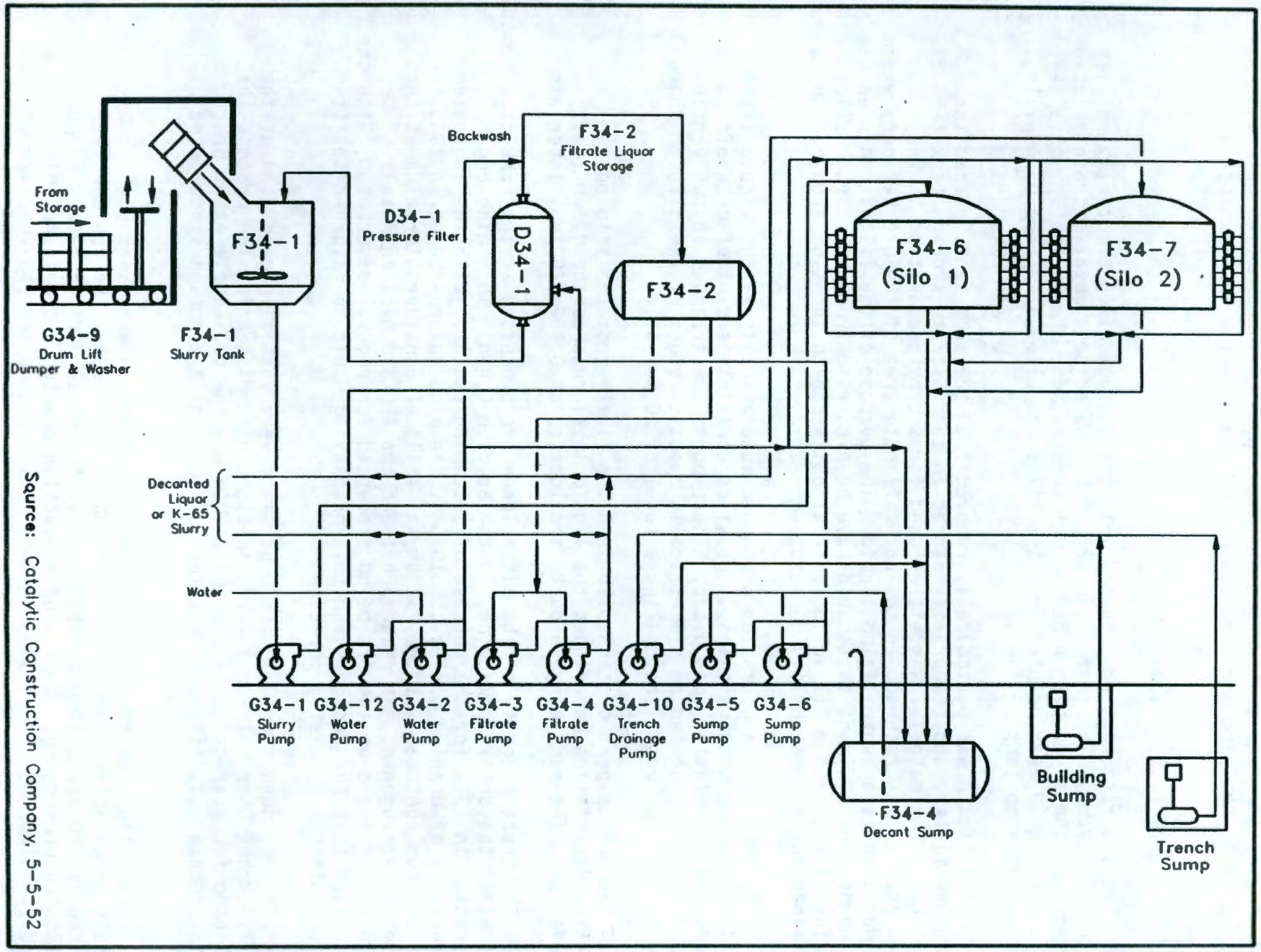

Figure 5-9. K-65 Handling and Storage Process Flow Diagram.

Source: Catalytic Construction Company, 5-5-52

The processing of this slurry and wash solution as received in the K-65 area was relatively simple. The material was received in the either silo 1 or 2 together with a certain amount of wash liquor. The wash liquor remaining in the pipe line was drained to the decant sump tank (F34-4).

5.5.2 Slurry Liquor Recovery

The slurries that were pumped into the storage silos eventually settled into two layers. The slurry liquor, either water or a metal nitrate solution, formed the top layer over a bed of wet K-65 solids. Periodically, this layer of clear liquid was decanted from the silos and allowed to flow by gravity to the decant sump tank (F34-4).

This liquid was periodically removed from the sump tank, passed through a pressure filter, and temporarily stored in the filtrate storage tank (F34-2). From here, the material was either used for slurry preparation in the K-65 area or was returned to the hot raffinate area of the Ore Refinery where it was used as a neutralizing liquid. The purpose of the filtration step was to remove any sediment that could have been carried from the storage silos during decantation. All solid material delivered to the K-65 area had to be retained for accountability purposes.

The decantation operation proceeded automatically as the liquid level built up in the storage silos. The silos contain a series of draw-off ports where the decantation took place. These ports are arranged in two vertical lines that are located on diametrically opposite sides of the silos. There are 25 ports on each line, making a total of 50 per silo.

The bottom port on each silo is 0.3 m (1 ft) from the silo bottom. Initial decantation began when the liquid level reached the 0.3 m (1 ft) elevation. The remaining 49 ports are located at 0.15-m (6-in.) intervals.

The great majority of the pitchblende ore processed at the FEMP came from one mine, the Shinkolobwe mine, in the Belgium Congo. This mine began operation in 1921 for the purpose of obtaining radium. With the increased importance of uranium during the 1940's, the mine was re-opened in 1943 for its uranium content. As the radium was still of considerable value at that time, an arrangement was reached between the AEC and African Metals Corporation based on the ore being processed for removal of uranium, with the provision that the residue from this processing would be returned to its owner, African Metals Corporation.

The residues stored in the K-65 silos were initially generated at the Mallinckrodt Chemical Works (MCW) in St. Louis, Missouri. The process that was used for extraction of uranium at MCW was the dual-cycle ether process. This process was different from the TBP-kerosene extraction system used at the FEMP.

Initially, the residues from the MCW operation were sent back to African Metals Corporation. However, beginning in April 1949, the residues were stored for future shipment rather than returned to African Metals Corporation following processing. Continued production created a storage problem. As a result, shipments of the drummed K-65 residues were sent to the Lake Ontario

Ordnance Works near Niagara Falls, New York. Also, the two K-65 Silos were planned as a part of the uranium processing plant scheduled to be constructed at Fernald, Ohio. Some of the drums sent to the Lake Ontario Ordnance Works were emptied into a converted concrete water tower at that site. A smaller number (approximately 6,000 drums) were shipped to Fernald by rail. In addition, the continuing production at MCW resulted in approximately 25,000 drums being sent directly from St. Louis to the FEMP. These shipments began in 1951.

At the FEMP, the drums were sent to a drum handling building that had been specifically built near the silos to transfer the contents of the drums of offsite origin into the silos. The material was slurried into the silo, where the solids would settle. The free liquid was decanted, and the clarified liquid was sent to the Ore Refinery sump. As the depth of solids reached the level of a given valve, the valve was sealed and the next higher valve was used to decant liquids. Settling and decanting continued in this way until the silos were filled to approximately 1.3 m (4 ft) below the top of the vertical wall. This process left a sludge with an estimated density of 1,600 kg/m^3 (100 lb/ft^3). The decanted liquid was recycled. The volume of material from the Lake Ontario Ordnance Works and from St. Louis filled Silo 1.

The processing of the pitchblende ore through the FEMP Refinery ran concurrently with the latter stages of processing the offsite drums through the drum-handling building. Therefore, Silo 1 was filled only with offsite K-65 material, and Silo 2 was filled with a mixture of offsite K-65 material and FEMP-generated K-65 material. The residue slurry from the Ore Refinery was conveyed to Silo 2 through the underground transfer line, which lay in a concrete trench, and was allowed to settle in the same manner as the offsite residue. During 1957 and 1958, the residue from processing Australian pitchblende was added to Silo 2. The total amount of Australian pitchblende residue was 172,570 kg (380,451 lb) in contrast to 8,620,376 kg (19,004,675 lb) of Congo origin. The remainder of the material subsequently added to Silo 2 was residue generated by the FEMP from the remaining Belgian Congo ores.

After the final decanting of Silo 2, some drummed material was added. Most of this material was soil that was contaminated with K-65 material leaking from drums. This contamination occurred because the drum storage area was adjacent to the drum-handling building. Other materials reportedly added to the silo contents were drum cleanout residues, cleanup materials from Q-11 (unprocessed uranium ore) storage and process areas, residues from decontamination of lab equipment, and Q-11 and K-65 samples.

5.6 UNDERGROUND STORAGE TANK PHYSICAL CHARACTERISTICS

This section provides general information regarding the four waste storage silos. Table B-8 also describes the silos in total.

5.6.1 General Tank Arrangement

The four waste storage silos are located south of the waste pit area, as shown in Figure 5-3. Silos 1 and 2 (K-65 silos) were constructed in 1951 and 1952 (DOE-OR 1990d). Silos 3 (metal oxide silo) and 4 (unused silo) were constructed in 1952 (DOE-FN 1992). Silo 4 was never used and, except for rainwater infiltration, remains empty today.

All four domed material storage silos are 24.4 m (80 ft) in diameter, 11 m (36 ft) high to the center of the silo dome, and 8.2 m (27 ft) high to the top of the vertical walls. The walls are 20.3-cm- (8-in.-) thick pre- and post-stressed concrete. The outer parts of the domes are also 20.3 cm (8 in.) thick and taper to 10.2 cm (4 in.) in thickness at the center.

The K-65 domes are foam-coated to protect them from weather, moderate thermal cycles, and to reduce radon flux. Each silo has five 50.8-cm- (20-in.-) diameter manholes, with four on a 7.6-m (25-ft) radius and the fifth slightly off center in the middle (Ferguson et al. 1986). The floor consists of 10.2-cm- (4-in.-) thick concrete over an underdrain system. The underdrain system consists of a 5.1-cm (2-in.-) slotted pipe in a 20.3-cm (8-in.) gravel layer underlain by concrete and compacted clay. The drain empties into a sump tank. The entire K-65 silo exteriors have been coated with 1.9 cm (0.75 in.) of gunite and are surrounded by an earthen berm to a height of approximately 7.9 m (26 ft). The berm provides support and shielding. Berms have not been placed around either Silo 3 or 4 (DOE-OR 1990b).

Silos 1 and 2 have a Type A design and are illustrated in Figure 5-10. Silos 3 and 4 have a Type B design and are illustrated in Figure 5-11. Figure 5-12 illustrates the K-65 silo leachate system discussed in Section 5.5.

Large areas of spalling occurred on the exterior surface gunite coating of the silos, particularly on Silo 2, leaving post-tension wires corroded and exposed to the weather. The exterior surfaces of the silos exhibited sufficient deterioration by 1963 to require repairs in 1964. All loose material was chipped away and the surface was patched with a 1.9-cm- (0.75-in.-) thick coat of cement mortar. After the gunite was repaired and a waterproofing membrane was applied, the earthen embankment was built to the top of the walls of Silos 1 and 2 (Figure 5-10). The embankments were originally constructed on a slope of 1.5:1; however, the slope was subsequently modified to 3:1 in 1983 to reduce soil erosion (Boback et al. 1987). Vents in the silos were sealed in 1979 (Camargo 1986).

In January 1986, the FEMP had a temporary dome cover installed to span across the deteriorated portion of the concrete domes of Silos 1 and 2. This cover is 9.1 m (30 ft) in diameter, is self-supporting, and sits on a rolled plate-steel skirt. The cover is composed of structural steel members that support 1.9-cm (0.75-in.) plywood sheeting. The plywood sheeting is covered with a weatherproofing membrane. A foam coating was applied to domes to further reduce weathering, temperature changes inside the silos, and radon gas emissions. The dome cover increases the stresses in the existing concrete, but all stresses are outside the deteriorated area and within acceptable

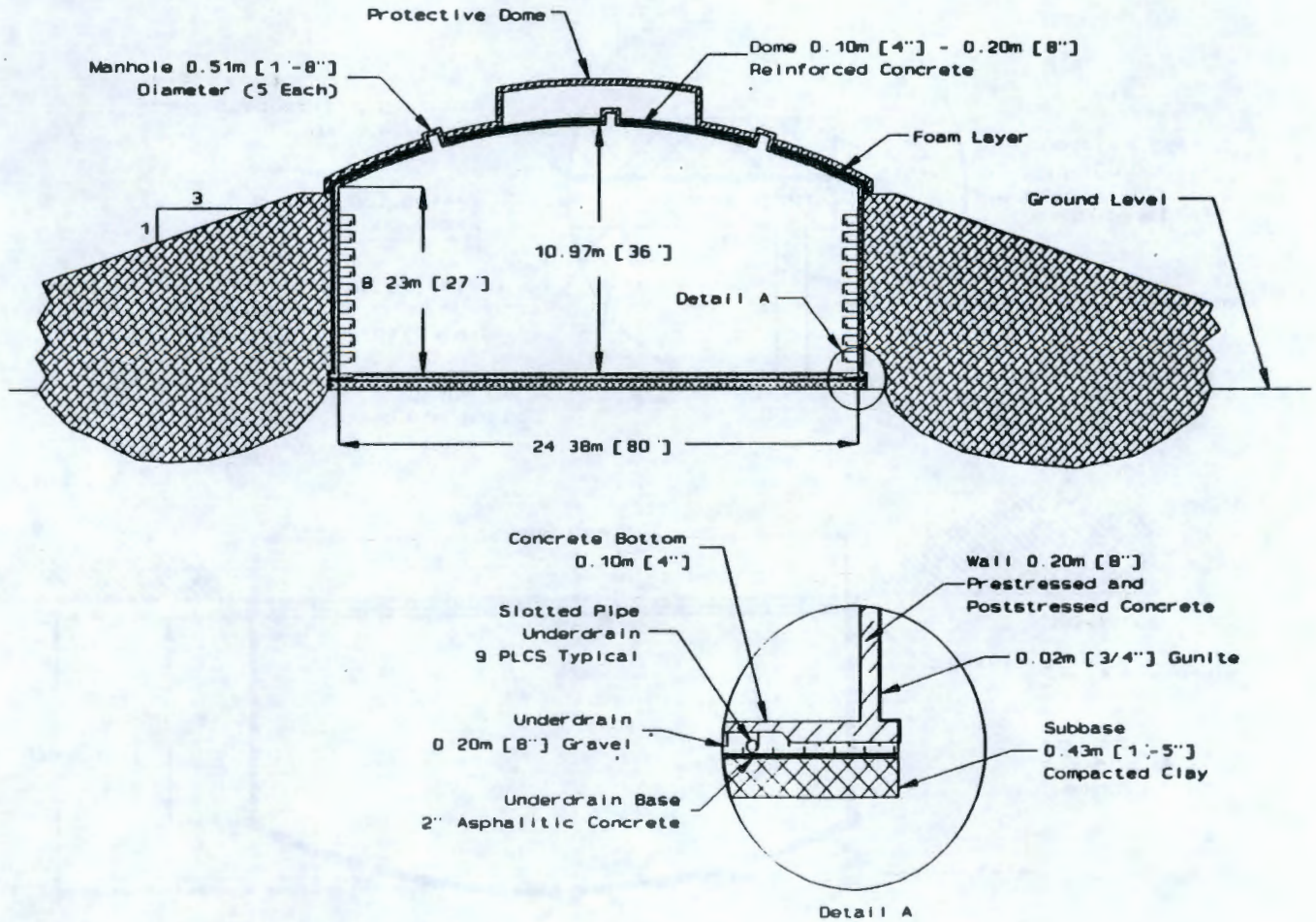

Figure 5-10. FEMP Type A Silo Design.

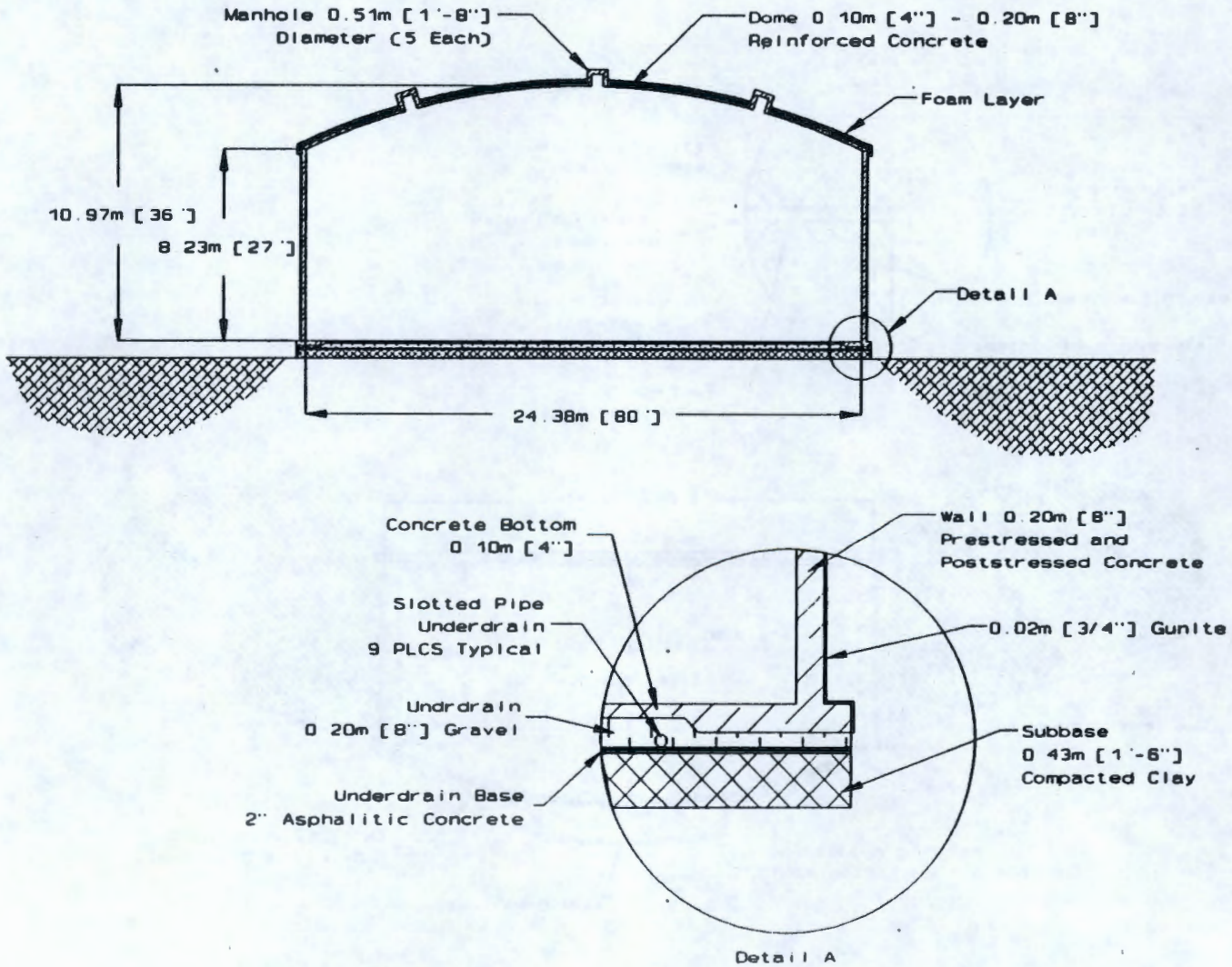

Figure 5-11. FEMP Type B Silo Design.

Figure 5-12. K-65 Silo Leachate Collection System.

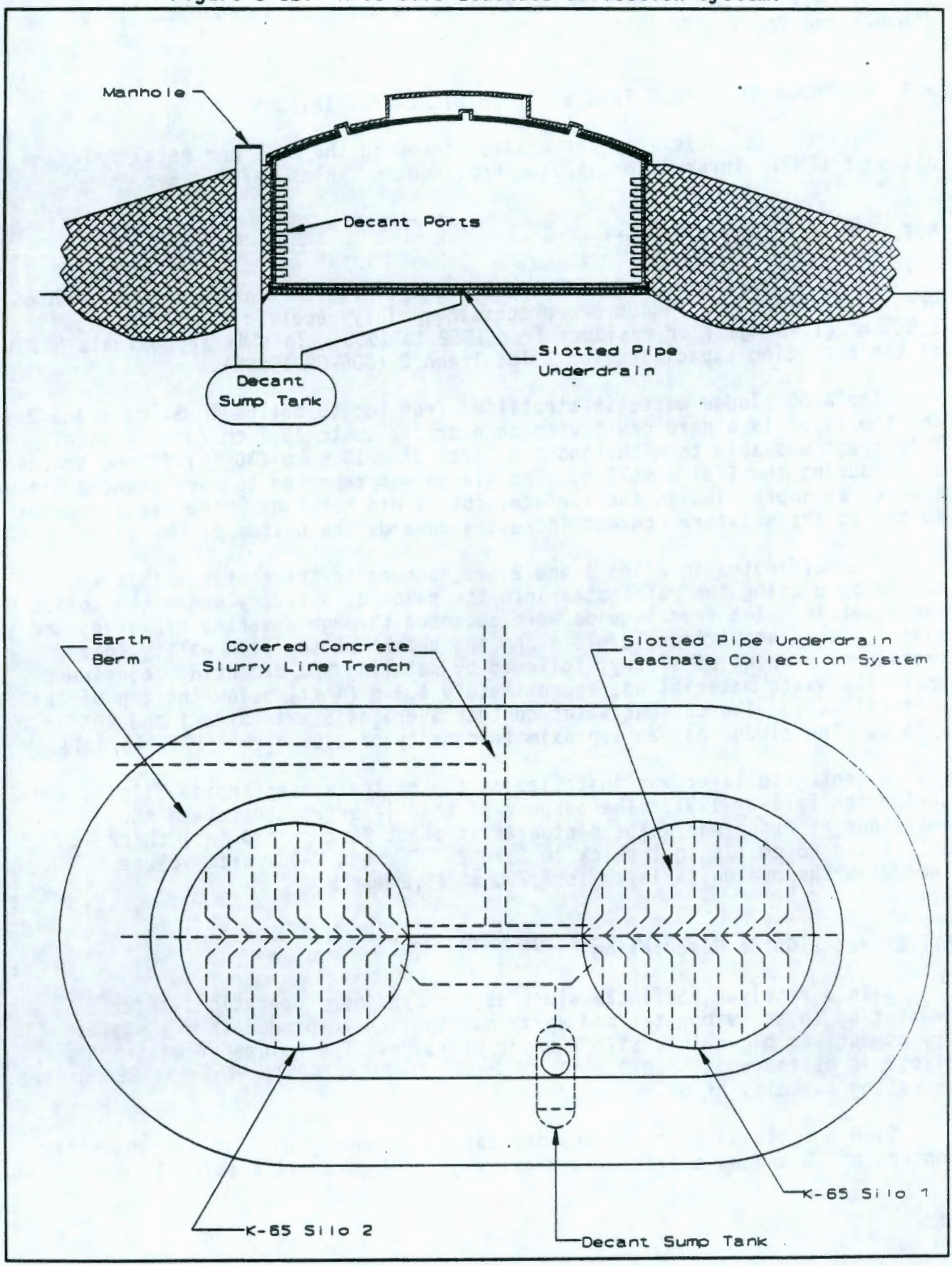

limits. The dome cover was installed so that containment of the silos' contents will be maintained in the event of a center silo dome collapse (Shanks and Vogel 1988).

5.7 UNDERGROUND STORAGE TANK WASTE PHYSICAL DESCRIPTIONS

This section describes the wastes stored in the K-65 and metal oxide silos at FEMP. Information is also provided in Tables B-7 and B-8.

5.7.1 K-65 Sludge Description

Silos 1 and 2 were used for the storage of radium-bearing residues which were by-products of uranium ore processing. They received approximately 5,505 m^3 (1.45 Mgal) of residues from 1952 to 1958. This is approximately 75% of the operating capacities for Silos 1 and 2 (DOE-OR 1990b).

The K-65 sludge waste is stratified from top to bottom in Silos 1 and 2. The top layer is a hard crust with some cracks up to 15.2 cm (6 in.) wide. This crust was able to withstand the force of a 13.6 kg (30 lb) flange dropped on it during the 1991 sampling. The flange was reported to have bounced off, leaving an impression in the surface, but it did not sink. The waste becomes softer as the moisture content increases towards the bottom of the silos.

The raffinates in Silos 1 and 2 are mounded in the center. This was caused by pumping the raffinates into the silos as a slurry where the solids would settle. The free liquids were decanted through a series of valves and piping placed at various levels along the height of the silo wall. This procedure, pumping of slurry, followed by settling and decanting, continued until the waste material was approximately 1.3 m (4 ft) below the top of the vertical wall. The current water content averages 51% in Silo 1 and 40% in Silo 2. The sludge has an approximate density of 2.05 g/cm^3 (17.1 lb/gal).

A bentonite layer was installed on top of the wastes inside Silos 1 and 2 during the fall of 1991. The purpose of this layer was to retard the emissions of radon gas. The bentonite is about 76.2 cm (30 in.) thick in Silo 1 and 66 cm (26 in.) thick in Silo 2. Current K-65 waste volume including the bentonite layer is 6,790 m^3 (1.8 Mgal).

5.7.2 Metal Oxide Description

Silo 3 received raffinate slurries from refinery operations after dewatering in an evaporator and spray-calcination to produce a dry waste. The dry powder was blown into Silo 3 under pressure. The volume of waste in Silo 3 is estimated at 3,970 m^3 (1.05 Mgal) (DOE-FN 1992). This is 88% of the operating capacity of Silo 3.

Silo 3 contains a homogenous dry talc-like powder with an average water content of 7% and an approximate density of 1.01 g/cm^3 (8.4 lb/gal).

5.8 WASTE CHARACTERIZATION CAPABILITIES

Sample preparation is performed onsite then shipped offsite for analysis. Two trailers were set up between Silos 3 and 4 for packaging samples during the last two tank sampling efforts performed during 1989 and 1991. Currently, the analyses of the tank samples are being conducted by IT Corporation in Knoxville, Tennessee (DOE-OR 1990d).

5.9 UNDERGROUND STORAGE TANK CHEMICAL CHARACTERISTICS

Sampling of Silos 1, 2, and 3 was conducted in 1989. The sampling effort for Silo 3 was fairly successful. However, the sampling efforts in Silos 1 and 2 were not nearly as successful and had only a 9% recovery. The waste was not fully characterized because of a lack of data from the lower areas. The results of organic and inorganic analysis of the samples are listed in Tables B-1, B-4, B-5, B-6, and B-7. They indicate that the wastes found in all the silos contain significant concentrations of heavy metals such as lead and arsenic. The waste also contains concentrations of aluminum, calcium, copper, iron, magnesium, sodium, and other metals. The total amounts of the most prevalent chemical constituents were calculated in Table B-9 and are listed in Table 5-2.

In 1990 and 1991, a successful sampling attempt was conducted on Silos 1 and 2. The field work was completed in August 1991, but the analyses are not available for inclusion into this document. The results will be documented in a future Operable Unit 4 remedial investigation report. It should be noted that some of the results may change, and some may change drastically.

5.10 UNDERGROUND STORAGE TANK WASTE RADIOLOGICAL CHARACTERISTICS

As part of the 1989 sampling campaign, radiological characteristics were also examined. The results are listed in Tables B-1, B-2, and B-3. A number of samples were tested and the averages for each silo are listed in Table 5-3. The waste contains different isotopes of uranium (primarily ^{238}U) and their decay products such as thorium, radium, and lead. Estimated totals for these isotopes were calculated in Table B-10 and are listed in Table 5-4.

5.11 FACILITIES FOR PROCESSING RETRIEVED TANK WASTE

No onsite facilities exist at the FEMP for processing retrieved tank waste. However, the design of a joule-heated vitrification plant has been completed for treatment and final disposal of the silo waste.

Table 5-2. Estimated FEMP Silo Chemical Mass Totals.

Component	Silo 1		Silo 2		Silo 3		Total		Percent
	kg	lb	kg	lb	kg	lb	kg	lb	
Al	2,540	5,600	6,260	13,800	64,200	141,600	73,000	161,000	0.4
Ba	16,600	36,600	17,600	38,700	816	1,800	35,016	77,100	0.2
Ca	13,150	29,000	629,000	1,387,000	113,900	251,000	756,050	1,667,000	4.2
Cr	310	690	168	370	1,300	2,870	1,778	3,930	0.0
Fe	134,000	296,000	86,600	191,000	152,000	335,000	372,600	822,000	2.1
Pb	205,000	451,000	62,100	137,000	19,100	42,000	286,200	630,000	1.6
Mg	12,700	28,000	42,600	94,000	221,800	489,000	277,100	611,000	1.5
Ni	10,840	23,900	4,580	10,100	13,700	30,300	29,120	64,300	0.2
K	1,090	2,400	680	1,500	44,900	98,900	46,670	102,800	0.3
Se	485	1,070	245	540	839	1,850	1,569	3,460	0.0
Ag	50	110	45	100	64	140	159	350	0.0
Na	45,400	100,000	9,070	20,000	138,800	306,000	193,270	426,000	1.1
Others	2,939,550	6,480,630	3,287,600	7,247,890	2,953,120	6,510,540	9,180,270	20,239,060	51.2
H_2O	3,576,000	7,884,000	2,811,000	6,197,000	276,200	609,000	6,663,200	14,690,000	37.2
Total	6,957,715	15,339,000	6,957,548	15,339,000	4,000,739	8,820,000	17,916,002	39,498,000	100.0

Table 5-3. FEMP Silo Waste Radiological Composition (pCi/g).

Radionuclide	Silo 1	Silo 2	Silo 3
^{238}U	636	784	1,500
^{235}U	15	38	91
^{234}U	676	886	1,478
^{230}Th	29,695	28,034	51,208
^{226}Ra	145,383	74,411	2,973
^{210}Pb	83,771	167,145	2,617

Table 5-4. Estimated FEMP Silo Radionuclide Content.

Isotope	Silo 1			Silo 2			Silo 3			Total		
	Ci	kg	lb	Ci	kg	lb	Ci	kg	lb	Ci	kg	lb
^{238}U	2.20	6,396.00	14,100.00	3.30	9,661.00	21,300.00	5.60	16,600.0	36,600	11.10	32,657.00	72,000.00
^{235}U	0.05	22.70	50.00	0.16	73.00	160.00	0.34	160.0	350	0.55	256.00	560.00
^{234}U	2.29	0.37	0.81	3.70	0.60	1.30	5.50	0.9	2	11.50	1.90	4.10
^{230}Th	100.00	5.10	11.30	120.00	6.40	14.00	190.00	10.0	22	410.00	22.00	48.00
^{226}Ra	490.00	0.50	1.10	310.00	0.31	0.69	10.00	0.0	0	810.00	0.80	1.80
^{210}Pb	280.00	0.00	0.01	690.00	0.01	0.02	10.00	0.0	0	980.00	0.01	0.03
Total	874.54	6,424.67	14,163.22	1,127.16	9,741.32	21,476.01	221.44	16,771.9	36,974	2,223.15	32,937.71	72,613.93

5.12 SOIL AND GROUNDWATER CONTAMINATION

Material in this section was taken from the *Operable Unit 4 Treatability Study Work Plan for the Vitrification of Residues from Silos 1, 2, and 3* (DOE-FN 1992). Radon and the elements resulting from its decay (referred to as daughter products or progeny) are the nuclides of concern from a health and environmental perspective. Radon is known to be emanating from the silos via cracks and joints. Radon and its daughter products are relatively mobile and capable of migrating through air. (Water in the bentogrout slurry is the primary barrier.) The berms and subsoil are believed to contain elevated levels of ^{210}Pb and ^{210}Po as a result of the probable diffusion of radon into the berms. Also, there may have been leakage from the existing leachate collection system beneath the silos into the surrounding soils. Sampling of the berms and soil beneath the silos is underway to confirm the nature and extent of any soil contamination.

Silo 3 is not believed to be a source of contamination to the surrounding areas and underlying soils. Nevertheless, Silo 3 must be considered a potential hazard because its contents are radioactive and in a dry powdery state susceptible to airborne dispersal if exposed to wind (DOE-FN 1992).

5.13 REFERENCES

Boback, M. W., T. A. Fleming, R. B. Grant, and R. W. Keys, 1987, *History of FMPC Radionuclide Discharges*, FMPC-2082, Westinghouse Materials Company of Ohio, Cincinnati, Ohio.

Camargo, 1986, *K-65 Silos Study and Evaluation for the Feed Materials Production Center*, Volume I, Sections I through IX, Camargo Associates, Ltd., Cincinnati, Ohio.

DOE-FN, 1992, *Operable Unit 4 Treatability Study Work Plan for the Vitrification of Residues from Silos 1, 2, and 3*, U.S. Department of Energy, Fernald Field Office, Fernald, Ohio.

DOE-OR, 1990a, *Initial Screening of Alternatives for Operable Unit 5*, FMPC-0512-3, U.S. Department of Energy, Oak Ridge Operations Office, Oak Ridge, Tennessee.

DOE-OR, 1990b, *Initial Screening of Alternatives for Operable Unit 4*, FMPC-0412-6, U.S. Department of Energy, Oak Ridge Operations Office, Oak Ridge, Tennessee.

DOE-OR, 1990c, *Remedial Investigation Report for Operable Unit 4*, FMPC-0406-5, U.S. Department of Energy, Oak Ridge Operations Office, Oak Ridge, Tennessee.

DOE-OR, 1990d, *Silos 1 and 2 (K-65 Silos) Removal Action Work Plan Feed Materials Production Center*, U.S. Department of Energy, Oak Ridge Operations Office, Oak Ridge, Tennessee.

DOE-OR, 1990e, *Feed Materials Production Center Annual Environmental Report for Calendar Year 1989*, FMPC-2200, U.S. Department of Energy, Oak Ridge Operations Office, Oak Ridge, Tennessee.

Ferguson, R. R., D. J. Georgopoulos, and A. H. Hansen, 1986, *Feed Materials Production Center Installation Assessment*, FMPC-2049, Westinghouse Materials Company of Ohio, Cincinnati, Ohio.

Harrington, C. D., and A. E. Ruehle, 1959, *Uranium Production Technology*, D. Van Nostrand Company, Inc., Princeton, New Jersey.

Shanks, P. A., and R. A. Vogel, 1988, *The K-65 Waste Storage Silos at the Feed Materials Production Center*, FMPC-2142, Westinghouse Materials Company of Ohio, Cincinnati, Ohio.

This page intentionally left blank.

6.0 IDAHO NATIONAL ENGINEERING LABORATORY, IDAHO

This section provides a detailed description of the high-level liquid waste (HLLW) storage tanks at the INEL Site in Idaho Falls, Idaho. A general site description of the facilities, environmental conditions, fuel processing activities, and waste storage methods is provided. The information is based on referenced documents and interviews with INEL Site personnel.

6.1 IDAHO NATIONAL ENGINEERING LABORATORY INTRODUCTION AND HISTORY

The INEL, originally known as the National Reactor Testing Station, was established in 1949 as a site where the DOE could safely build, test, and operate various types of nuclear facilities. Figure 6-1 gives the general location of the INEL site.

Figure 6-1. INEL Site Location.

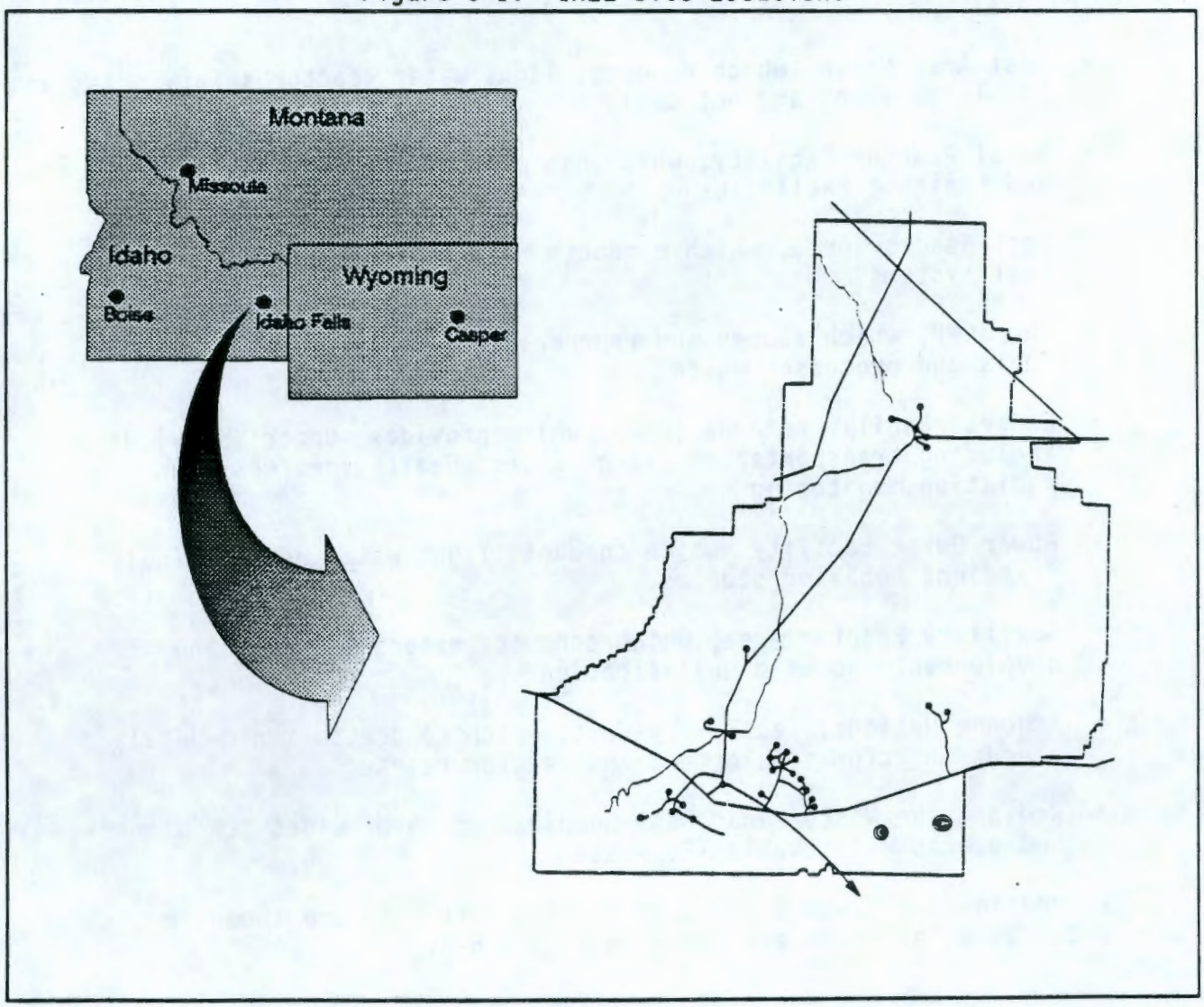

The INEL Site is one of the DOE's principal centers for conducting nuclear energy research and providing support for the U.S. Navy nuclear fleet. It has the world's largest and most varied collection of reactors, including research testing, power, and ship propulsion reactors. As of 1984, the number of INEL-built reactors had reached 52 (EG&G 1984).

6.2 IDAHO NATIONAL ENGINEERING LABORATORY DESCRIPTION

The INEL Site encompasses an area of approximately 2,315 km^2 (894 mi^2) on the eastern Snake River Plain in southeastern Idaho. Currently the primary mission of the INEL is to furnish engineering services and products, principally for peacetime atomic-energy applications, nuclear safety research, defense programs, and advanced energy concepts (Orr and Cecil 1991). Although the INEL Site is remote, adequate road and rail access is available and can support large construction and operations efforts.

The major INEL facility areas and the primary function of the facilities are as follows:

- Test Area North, which conducts light water reactor safety tests and has large shops and hot cells
- Naval Reactor Facility, which has prototype ship propulsion reactors and training facilities
- Test Reactor Area, which conducts materials testing for U.S. Navy fuel systems
- The ICPP, which stores and reprocesses defense and test reactor fuels and processes waste
- Central Facilities Area (CFA), which provides support services including transportation, large shops, health services, and radiation monitoring
- Power Burst Facility, which conducts light water reactor fuel transient behavior studies
- Auxiliary Reactor Area, which conducts materials tests and development and weld qualification
- Argonne National Laboratory-West, which conducts liquid-metal breeder reactor development and reactor research
- Radioactive Waste Management Complex, which provides LLW disposal and stores retrievable TRU waste.

The locations of these facilities for the INEL Site are shown in Figure 6-2. Site railroads are shown in Figure 6-3.

Figure 6-2. INEL Site Map.

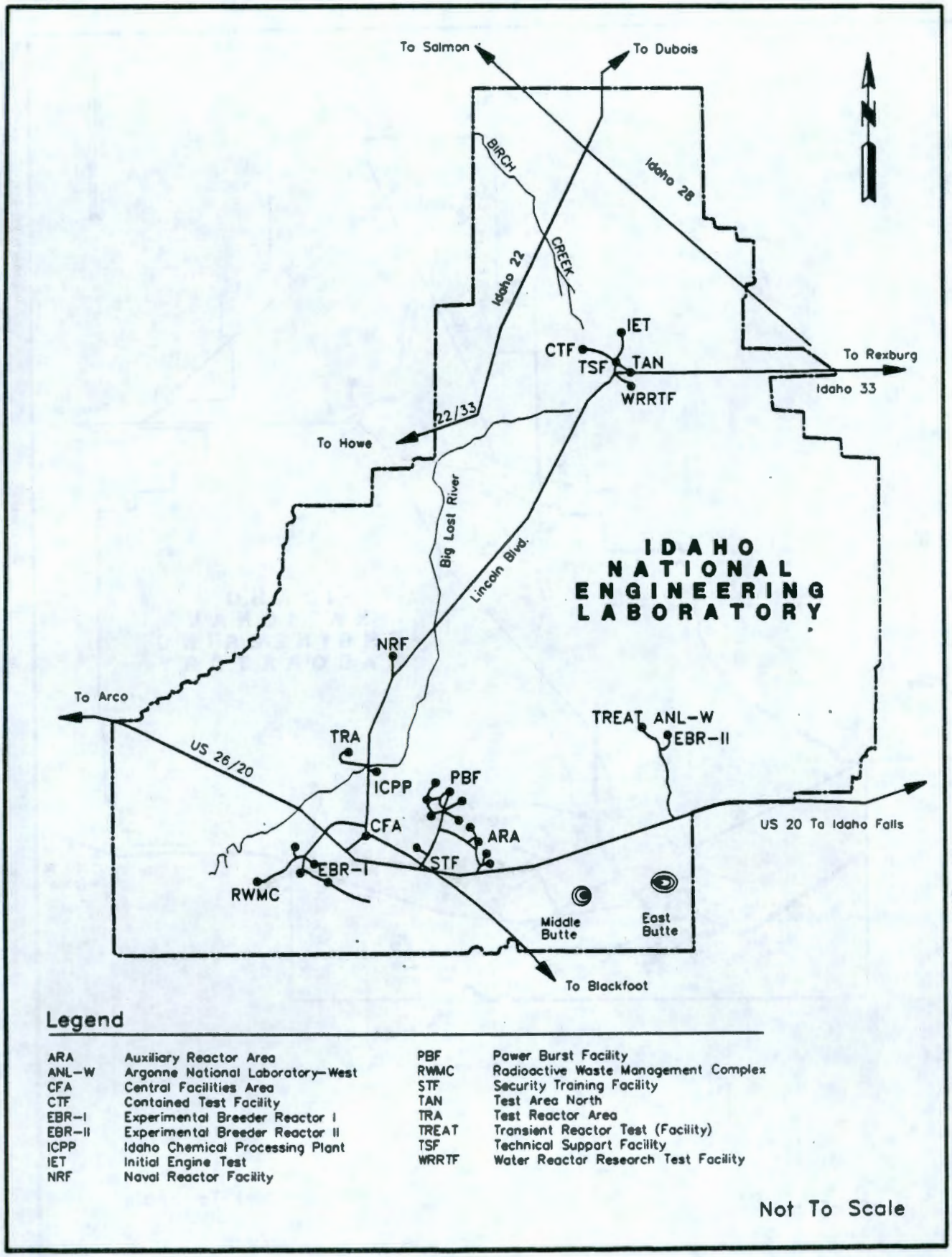

Figure 6-3. INEL Site Railroad Trackage.

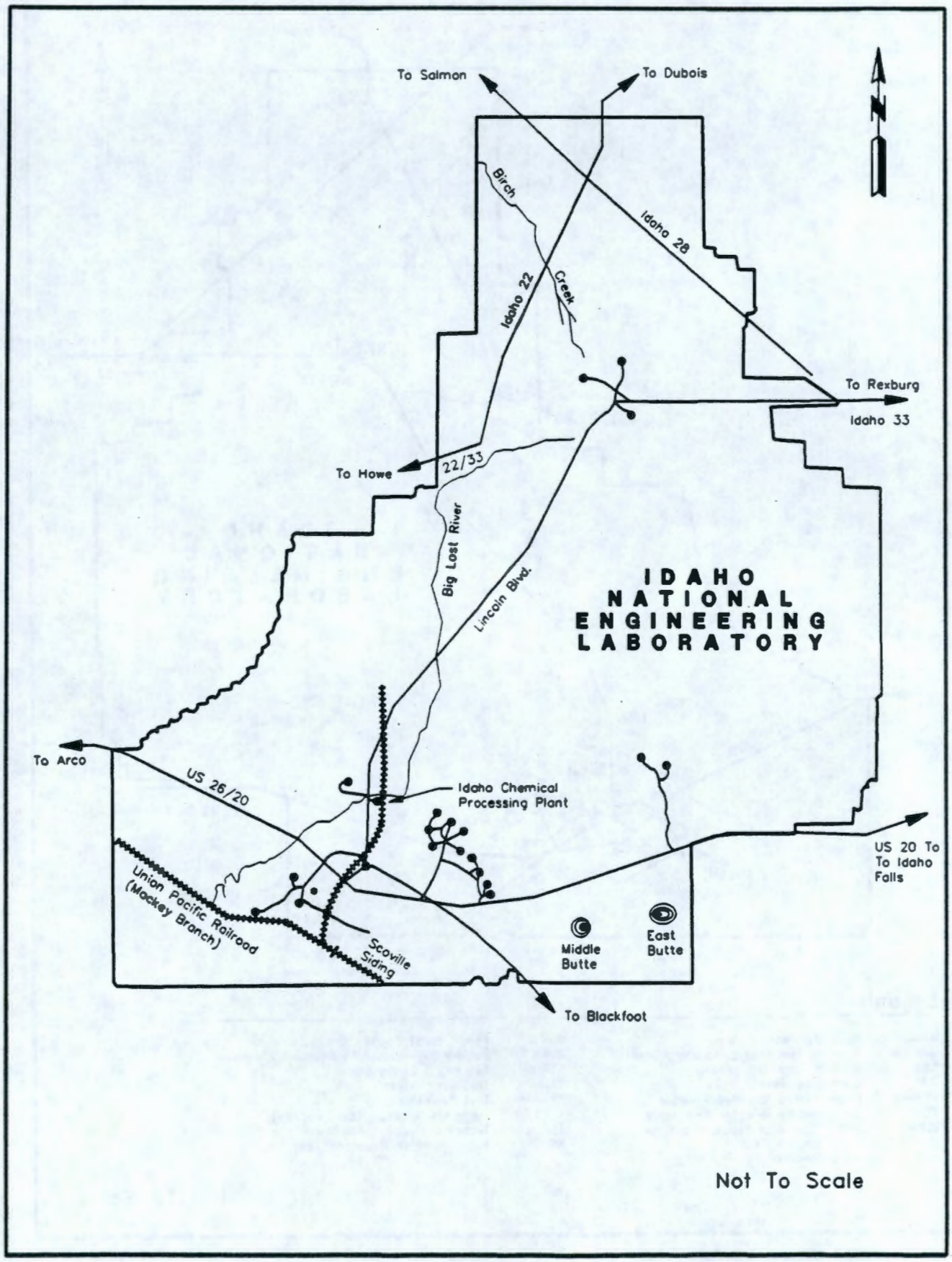

In addition to the facilities at the INEL Site, there are office buildings, a computer center, and a major laboratory in Idaho Falls, Idaho, located approximately 65 km (40 mi) from the INEL Site. A significant portion of INEL-related technical, analytical, and administrative support capability is concentrated in Idaho Falls as well.

The INEL is operated by five separate contractors: EG&G Idaho, Inc.; Exxon Nuclear Idaho Company; Westinghouse Idaho Nuclear Company, Inc.; Westinghouse Electric Corporation; and Argonne National Laboratories. These contractors conduct various programs at the INEL under the administration of three DOE Operations Offices: Idaho Operations Office, Pittsburgh Naval Reactors Office, and Chicago Operations Office.

The INEL and its associated facilities are served by an extensive transportation network capable of moving thousands of persons and tons of freight each day. Commercial service is available from airlines, regional and interstate trucking firms, bus lines, and railroads.

Approximately 262 km (164 mi) of paved roads restricted to use by employees are contained within the boundaries of the INEL Site. An additional 144 km (90 mi) of paved highways passing through the INEL Site are used by the general public. U.S. Highways 20 and 26 cross the southern portion of the INEL Site, and Idaho State Highways 22, 28, and 33 cross the northern part. In addition to the paved roads, INEL has a network of unpaved roads and trails that provide access for emergency, security, and service vehicles throughout the INEL Site (EG&G 1984).

Idaho Falls, Idaho receives railroad freight service from Butte, Montana, to the north and Pocatello, Idaho, and Salt Lake City, Utah to the south. From these points, interconnections are made throughout the United States. From Blackfoot, Idaho, the north-south railroad track carries rail freight to the INEL Site over the Mackay Branch line, which connects to an INEL spur south of the CFA. Railroad cars are picked up at the Scoville Siding along the spur. There are 22 km (14 mi) of Mackay Branch line traversing the southern part of the INEL Site.

A government-owned railroad track passes north from the Mackay Branch through the CFA, then past the east side of the ICPP to the Naval Reactor Facility. A spur line runs west to connect this track into and through the south end of the ICPP's Storage Facility. The Radioactive Waste Management Complex is serviced by a spur running north from the Mackay Branch, primarily for receiving specially-designed freight cars carrying contaminated waste from other parts of the nation and the INEL Site. Commercial engines and crews handle the movement of freight cars on this spur.

The size limits on rail shipments restrict loads to 4.7 m (15.5 ft) high and 3.3 m (10.7 ft) wide. Accordingly, many smaller components and pieces for field assembly can be shipped directly from the suppliers. A 145,000-kg (160-ton) gantry crane with a span 1.8 m (6 ft) wider than a standard rail car, and with a 7-m (23-ft) lift, is available at the CFA. Two 68,000-kg (75-ton) mobile cranes are also available. Components can be unloaded at the INEL Site railheads and trucked to appropriate sites, or a railway spur can be extended to selected sites (EG&G 1984).

Plant utilities such as water, steam, gases, and electrical/electronic services are provided by a combination of original, upgraded, and new facilities on the INEL Site. Raw water is obtained from deep wells and is treated for the various uses required at the INEL Site. Electrical power is obtained from two sources: the main source is the INEL Site grid, furnished power by Idaho Power Company and Utah Power and Light Company; the second source is Experimental Breeder Reactor-II, a liquid-metal fast breeder reactor generating plant located on the INEL Site. A coal-fired steam generation plant became operational in April 1984, providing the ICPP with steam for processing and heating (EG&G 1984).

6.2.1 Idaho Chemical Processing Plant

The ICPP, currently operated by Westinghouse Idaho Nuclear Company, was constructed in 1951 and is located on a 0.81-km^2 (0.31-mi^2) site in the southwest quadrant of the INEL Site (Figure 6-2). The primary purpose of the ICPP is to recover uranium and krypton from spent irradiated reactor fuels and to safely manage the radioactive wastes that result. A secondary purpose is to develop improved fuel processing and waste management methods. In 1963, a process of solidifying HLLW, known as calcining, was developed and is currently a major process for managing these wastes.

The high-level acidic waste generated at ICPP has been stored in stainless steel tanks located in underground vaults. The waste is held in the tanks until it is transferred for calcination. The location of the HLW tank farm at ICPP is shown in Figure 6-4.

6.3 AMBIENT WEATHER AND CLIMATE CONDITIONS

The majority of information regarding climatic and weather conditions at the INEL Site were derived from the *INEL Environmental Characterization Report* (EG&G 1984).

6.3.1 Climate

The climate of the Snake River Plain is characteristic of a semiarid steppe. The topographic features that affect local weather patterns are the northeast-southwest orientation of the plain and the mountain ranges bordering on the north. Air masses entering the Snake River Plain must first cross mountain barriers where much of the moisture precipitates. Therefore, rainfall at the INEL Site is light.

Weather conditions at the INEL Site include temperature inversions. Winds and clouds associated with stormy weather may prevent normal nighttime inversions. Daytime inversions may occur during the winter and may also extend into spring, if a snow cover is present.

Figure 6-4. ICPP Area Map.

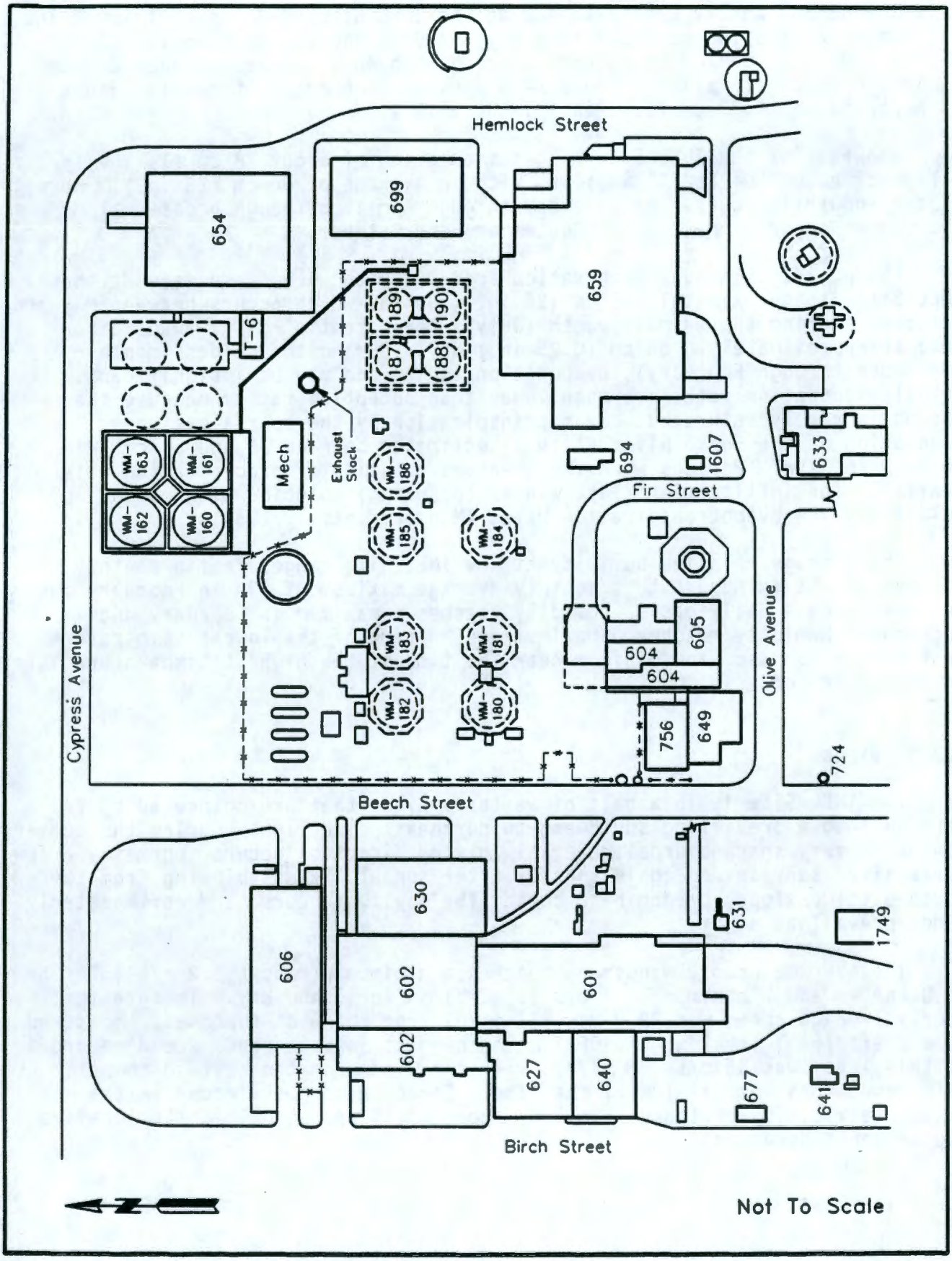

6.3.2 Precipitation

The normal annual precipitation at the INEL Site is 22 cm (9.1 in). The maximum precipitation occurs during May and June and the minimum in July. During the 28-yr period of record, there have been 13 occasions when 2.5 cm (1 in.) or more of rain fell in a 24-h period. The greatest rainfall in a 24-h period was 4.39 cm (1.73 in.) in June 1954.

Snowfall at the INEL Site ranges from a low of about 28 cm (11 in.)/yr to a high of about 104 cm (41 in.)/yr, with an average of 66 cm (26 in.). Normal winter snowfall occurs from November through April, although occasional snowstorms occur in May, June, September, and October.

The potential annual evaporation from saturated ground surface at the INEL Site is approximately 91 cm (36 in.), 80% of which occurs between May and October. During the warmest month (July), the potential daily evaporation rate is approximately 0.64 cm (0.25 in.)/day. During the coldest months (December through February), evaporation is low and may be insignificant. Actual evaporation rates are much lower than potential rates, because the ground is rarely saturated. Evapotranspiration by the sparse native vegetation of the Snake River Plain is estimated between 15 and 23 cm (6 to 9 in.)/yr. Periods when the greatest quantity of precipitation water is available for infiltration (late winter to spring) coincide with periods of relatively low evapotranspiration rates (Mundorff et al. 1964).

The average relative humidity at the INEL Site ranges from a monthly minimum of 15% in August to a monthly average maximum of 89% in February and December. On a daily basis, humidity reaches a maximum in February and December. Humidity reaches a maximum at the time of the lowest temperature just before sunrise, and minimum near the time of the highest temperature late in the afternoon.

6.3.3 Winds

The INEL Site is in a belt of westerly winds that are channeled by the terrain into a prevailing southwest-to-northeast direction. During the summer months, a very sharp diurnal reversal in wind direction occurs, normally a few hours after sunrise and again shortly after sunset. Winds blowing from the southwest (up-slope) predominate during the daylight hours, and northeasterly winds prevail at night.

The average hourly windspeed reaches a minimum of about 2.2 m/s (5 mi/h) in December and a maximum of 4 m/s (9 mi/h) in April and May. The greatest hourly average speed was 22.8 m/s (51 mi/h) from the west-southwest (measured at a 20-ft [6-m] level at the CFA). The highest instantaneous speed recorded at this level was 35 m/s (78 mi/h), with the wind from the west-southwest. Calm conditions prevail 10% of the time. Strong wind gusts occur in the immediate vicinity of thunderstorms. These gusts are usually quite localized and of short duration.

6.3.4 Temperatures

During the 32-yr period of record, temperature extremes at the CFA have varied from a low of -44 °C (-47 °F) in January and December to a high of 38 °C (101 °F) in July. During winter, the average maximum temperature is approximately -1 °C (31 °F), and the average minimum is approximately -14 °C (6 °F). Summer data indicate an average maximum temperature of 28 °C (83 °F) and an average minimum of about 8 °C (46 °F).

6.4 GEOLOGICAL AND HYDROLOGICAL CONDITIONS

This section discusses the geological and hydrological conditions underlying the INEL and ICPP sites.

6.4.1 Geological Conditions

The INEL Site rests in the west-central part of a northeast-trending structural basin approximately 124 km (200 mi) long and 31 to 43 km (50 to 70 mi) wide. The INEL Site is underlain by a layered sequence of Tertiary and Quaternary volcanic rocks consisting of basalt flows, ash, and cinder and sedimentary interbeds that are more than 3,330 m (10,000 ft) thick. The sedimentary interbeds are derived from fluvial, lacustrine, and eolian deposits and consist of clay, silt, sand, and gravel.

Figure 6-5 shows a generalized geological cross section through the ICPP. Beneath the ICPP the unsaturated zone and the uppermost part of the Snake River Plain aquifer consist of about 40 basalt flows from the land surface to a depth of 212 m (700 ft). This basalt sequence is interbedded with 15 to 20 sedimentary layers and is overlain by a veneer of superficial alluvial sediments consisting of poorly sorted gravel to gravelly sand with minor silt and clay (Anderson 1990).

6.4.2 Hydrological Conditions

The primary aquifer underlying the INEL Site is called the Snake River Plain aquifer. This aquifer, the most productive in the United States, consists of a thick sequence of basalts and sedimentary interbeds filling a large, arcuate, structural basin in southeastern Idaho (Orr and Cecil 1991).

Recharge to the Snake River Plain aquifer is principally from infiltration of applied irrigation water, infiltration of streamflow, and alluvial groundwater inflow from adjoining mountain drainage basins. Some recharge may be from direct infiltration of precipitation, although the small annual precipitation on the plain (20 cm [8 in] at the INEL Site), evapotranspiration, and the great depth to water (in places exceeding 300 m [984 ft]) probably minimize this source of recharge (Orr and Cecil 1991).

The primary surface water body on the INEL Site is the Big Lost River, which drains the Lost River Range and Pioneer Range west of the INEL Site. Additional surface drainages that provide recharge to the Snake River Plain aquifer at the INEL Site include Birch Creek and the Little Lost River (Figure 6-6).

Figure 6-5. ICPP Geological Cross Section.

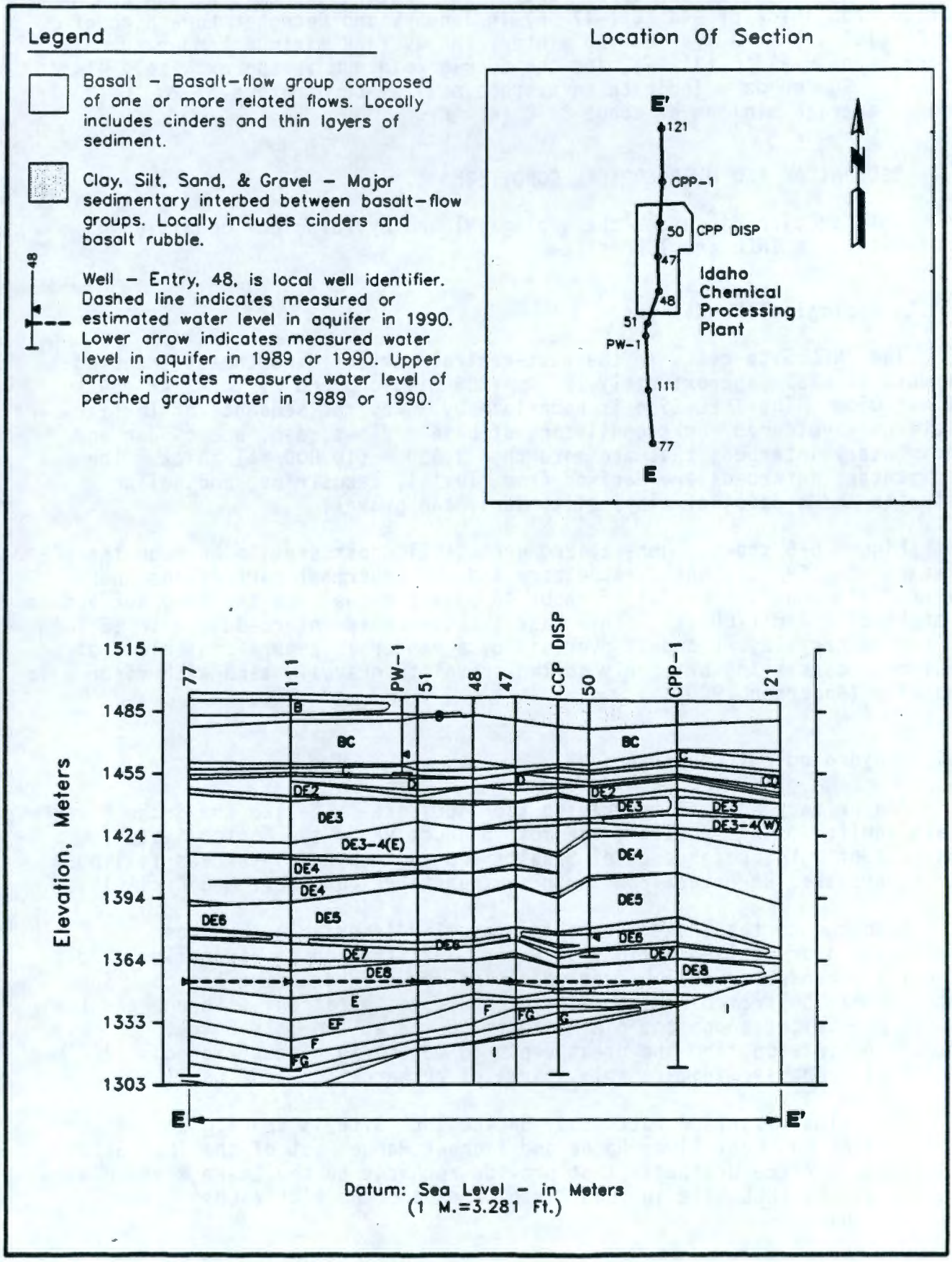

Figure 6-6. INEL Major Surface Drainages.

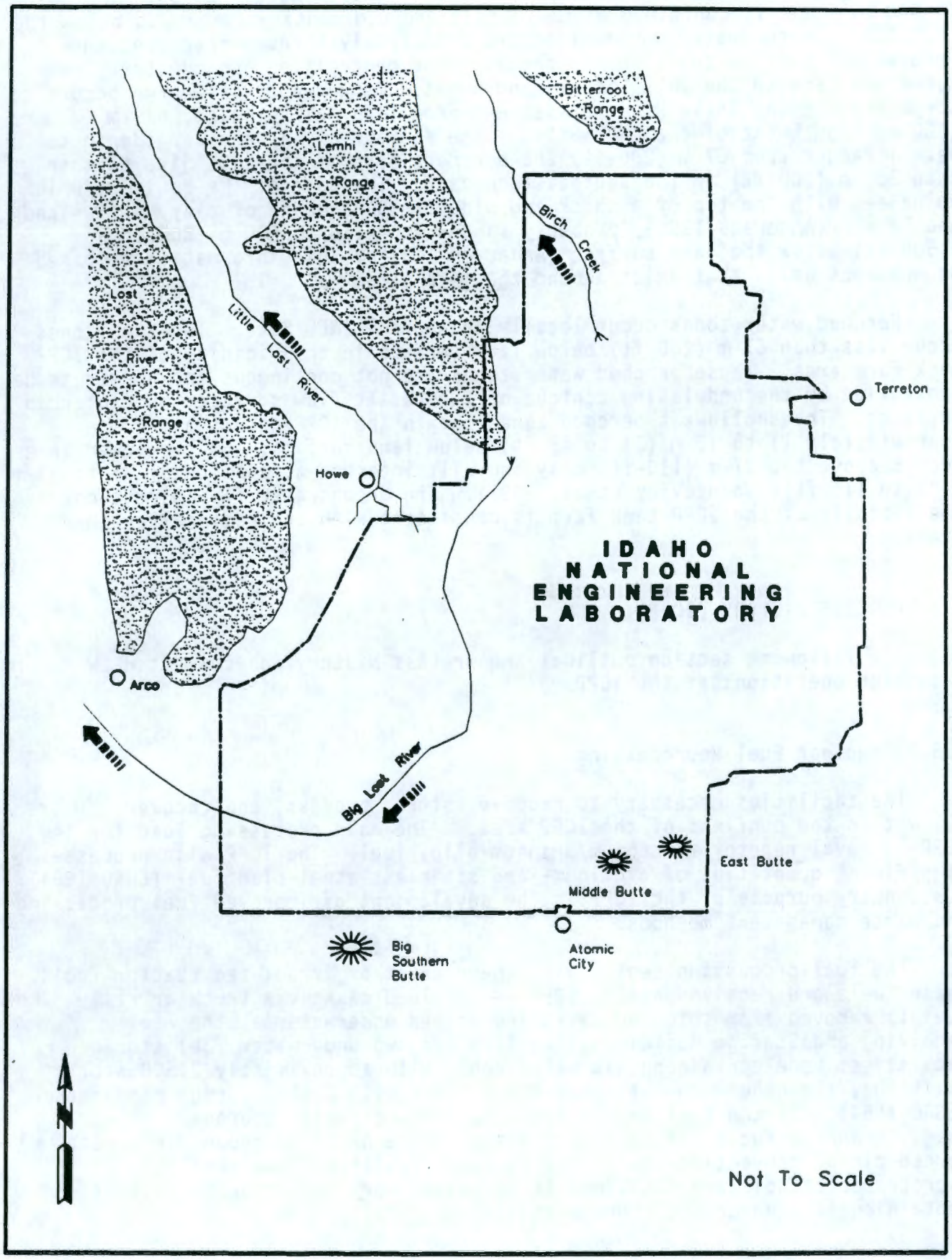

The Snake River aquifer covers an area of approximately 24,900 km^2 (9,600 mi^2) and is contained within basalt and sedimentary interbeds below the INEL Site. Groundwater movement occurs principally through fractures and permeable interflow zones in the basalt. The generalized groundwater flow direction beneath the INEL Site is southwest. Groundwater discharge occurs to springs along the Snake River downstream from Twin Falls, Idaho, 62 km (100 mi) southwest of the INEL Site. The surface of the aquifer (depth to water) ranges from 67 m (200 ft) the northern part of the INEL Site to more than 300 m (900 ft) in the southeastern part. The base of the aquifer, which coincides with the top of a thick and widespread sequence of clay, silt, sand, and basalt (Anderson 1990), probably ranges from 270 to 500 m (800 to 1,500 ft) below the land surface (Anderson 1991). This information is based on numerous wells that exist around the INEL Site.

Perched water zones occur locally around the INEL Site. Two such zones occur less than 67 m (200 ft) below land surface in the vicinity of the ICPP tank farm area. These perched water zones are not continuous and appear to be controlled by the undulating contour of the basalt flow surfaces and interbed surfaces. The shallowest perched zone beneath the ICPP occurs at approximately 11 to 15 m (34 to 45 ft) below land surface, and the lower zone occurs above the 37-m (110-ft) clay and silt interbed at a depth of 35 to 39 m (105 to 116 ft) (Woznievicz et al. 1991). The groundwater flow direction in the vicinity of the ICPP tank farm is consistent with the regional southwest trend.

6.5 PROCESS HISTORY (ICPP)

The following section outlines the process history and current HLLW treatment operations at the ICPP.

6.5.1 Nuclear Fuel Reprocessing

The facilities necessary to receive, store, process, and recover ^{235}U are all within the confines of the ICPP area. The main processing load for the ICPP is naval reactor zirconium/uranium-alloy fuel. The ICPP also processes significant quantities of aluminum- and stainless-steel-clad fuel (EG&G 1984). A secondary purpose of the ICPP is the development of improved fuel processing and waste management methods.

The fuel processing begins with the receipt of irradiated reactor fuels. These fuels are received at the ICPP in shielded casks via truck or rail. The fuel is removed from shipping casks and stored underwater at the Fuel Receiving and Storage Building. The ICPP has two underwater fuel storage facilities: one containing six water pools with approximately 2,500 storage positions, the other consisting of three pools with 2,658 storage positions (EG&G 1984). If the fuel is not suitable for underwater storage (e.g., graphite fuel), it is stored either above or below ground in special forced-air or convection-cooled dry storage facilities. Currently, unprocessable fuels are contained in additional dry fuel storage facilities containing 47 underground storage vaults.

The processing begins with the dissolution of the fuel in acid, using one of several preliminary operations. In the case of aluminum-alloyed fuel, the fuel is dissolved in HNO_3, resulting in a solution containing uranyl nitrate and fission product nitrates. For graphite fuel, dissolution is preceded by grinding and combustion in a fluidized bed. Small quantities of other fuels are custom processed in specialized remote hot cells. The dissolver product solution is treated to remove solids and is processed in a modified PUREX-solvent extraction system. The final product stream from the solvent extraction system is a uranyl nitrate solution, which is evaporated and decomposed (denitrated) to uranium trioxide granules. The granules are then shipped to ORNL for refabrication (EG&G 1984).

Solvent cleanup systems wastes and fission products from the first cycle extraction process, as well as the small losses of fissile material, are channeled to one stream, which is stored as an acidic liquid in cooled, high-integrity stainless steel storage tanks, with secondary containment in concrete vaults (discussed below). Raffinate from later extraction cycles is stored in uncooled tanks.

6.5.2 Waste Calcining

After some interim storage period in the HLLW tank farm, the high- and intermediate-level ICPP wastes are transferred to the New Waste Calcining Facility (NWCF) located within the ICPP. Here, the wastes are combined with chemical additives to minimize corrosion, and then sprayed into a heated fluidized bed of granular solids. The liquid waste is transformed into metallic oxides (called calcine) within the bed. The calcine is removed near the bottom of the bed and pneumatically transported to storage bins. The gaseous products are processed through an extensive cleanup system before being discharged to the atmosphere (EG&G 1984).

Startup of the NWCF occurred in 1982, as a state-of-the-art method of solidifying and storing HLLW. The NWCF incorporates the latest available technology in fluidized-bed calcination, off-gas cleanup, remote operation/maintenance, and decontamination. The waste calcining process affords a safer waste form, waste volume reduction, a 500-yr retrievable storage, continuous monitoring of waste and waste containers, and a safer waste form.

Calcined wastes are stored in seven high-integrity stainless steel bins. The bins are contained within concrete vaults which provide radiation shielding and secondary containment for the calcine. Table 6-1 shows the current inventory of calcined wastes at the NWCF. Table 6-2 shows the typical chemical composition of a sodium blend calcine waste.

Calcined waste storage bins are constructed with a network of monitoring systems including temperature, pressure, and radiation monitoring systems. Each is described as follows:

- Temperature monitoring system--Temperature control is important to prevent caking or sintering of solids to ensure retrievability. In addition, temperature profiles provide an indication of the solids level in the bins, cooling of the vaults, and radiolytic decomposition of the calcine.

Table 6-1. Calcined Solids Inventory at the INEL.

Bin set	Capacity		Inventory		Calcine types
	m^3	ft^3	m^3	ft^3	
1	221	7,800	221	7,800	Al
2	850	30,000	850	30,000	Al, Zr
3	1,076	38,000	1,076	38,000	Zr
4	481	17,000	481	17,000	Zr
5	991	35,000	708	25,000	Zr, Zr-Na
6	1,557	55,000	Empty	--	--
7	1,784	63,000	Empty	--	--

Table 6-2. Typical Chemical Composition of Sodium Blend Calcine.

Chemical	Weight %
CaF_2	42.4
Miscellaneous	4.6
B_2O_3	2.9
Na_2O	5.1
CdO	5.7
Al_2O_3	9.6
CaO	12.2
ZrO_2	17.5

Tank temperatures are monitored using thermocouples in the solids transport system, cyclone separator, cyclone cell, individual storage bins, and the vault. Transport and transport air temperature for bin sets 5 and 6 are monitored on the distributed control system in the NWCF control room. Thermocouple readings are recorded weekly while the bin is filling, monthly until thermal equilibrium is reached, and annually thereafter.

- Pressure monitoring system--Bin pressures are monitored until the bin reaches capacity. Once full, the bins are isolated from air sources to prevent pressurization. Pressure and vacuum relief valves are provided to prevent damage to the bins and releases to the environment. The valves are tested annually for operability.

- Radiation monitoring system--Both remote area monitors and constant air monitors are used for radiation monitoring of the storage bins. The vault exhaust, the cyclone cell, and the off-gas filter room are monitored. If radiation is detected, the vault exhaust air flows are automatically diverted through HEPA filters before discharge.

6.6 UNDERGROUND STORAGE TANK PHYSICAL CHARACTERISTICS

The HLLW tank farm, located in the northern portion of the ICPP area (Figure 6-4), consists of eleven 1,140-m^3- (300,000-gal-) capacity stainless steel tanks, (Tanks WM-180 to WM-190). The tank farm is designed to store HLLW concentrate generated primarily from fuel processing at the ICPP.

The 11 USTs have three design types: A, B1, and B2. They can be seen in Figures 6-7, 6-8, and 6-9, respectively. A summary of the physical characteristics of the storage tanks is located in Table C-1.

6.6.1 Tank Design Information

The Type A USTs (Tanks WM-180 and WM-181) have a 1,200-m^3 (318,000-gal) capacity and are constructed of 347 stainless steel. They were the original HLLW USTs and were constructed between 1951 and 1952. The Type A USTs started service in 1953. They have a wall thickness ranging from 0.79 cm (0.31 in.) at the bottom to 0.64 cm (0.25 in.) at the top of the tank. Stainless steel

Figure 6-7. ICPP Type A Tank.

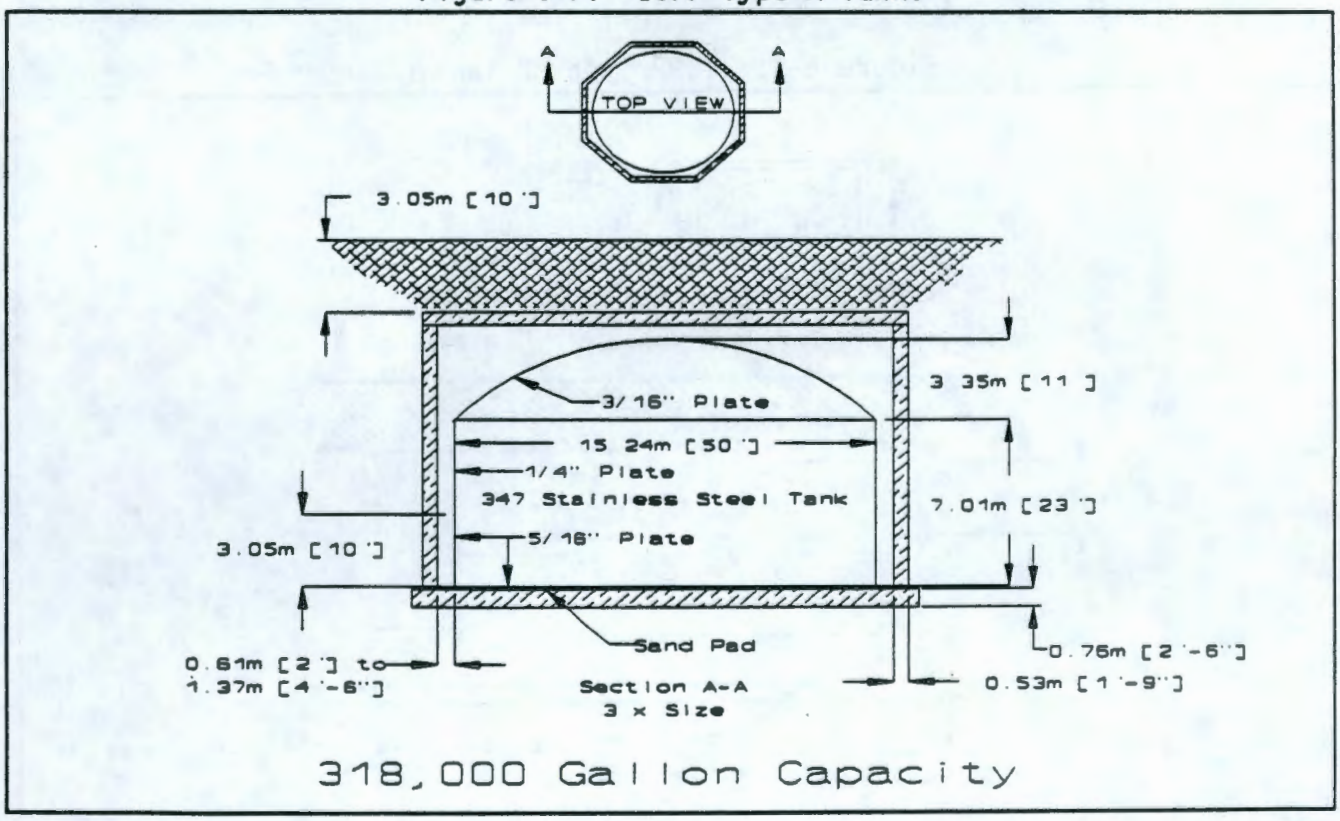

Figure 6-8. ICPP Type B1 Tank.

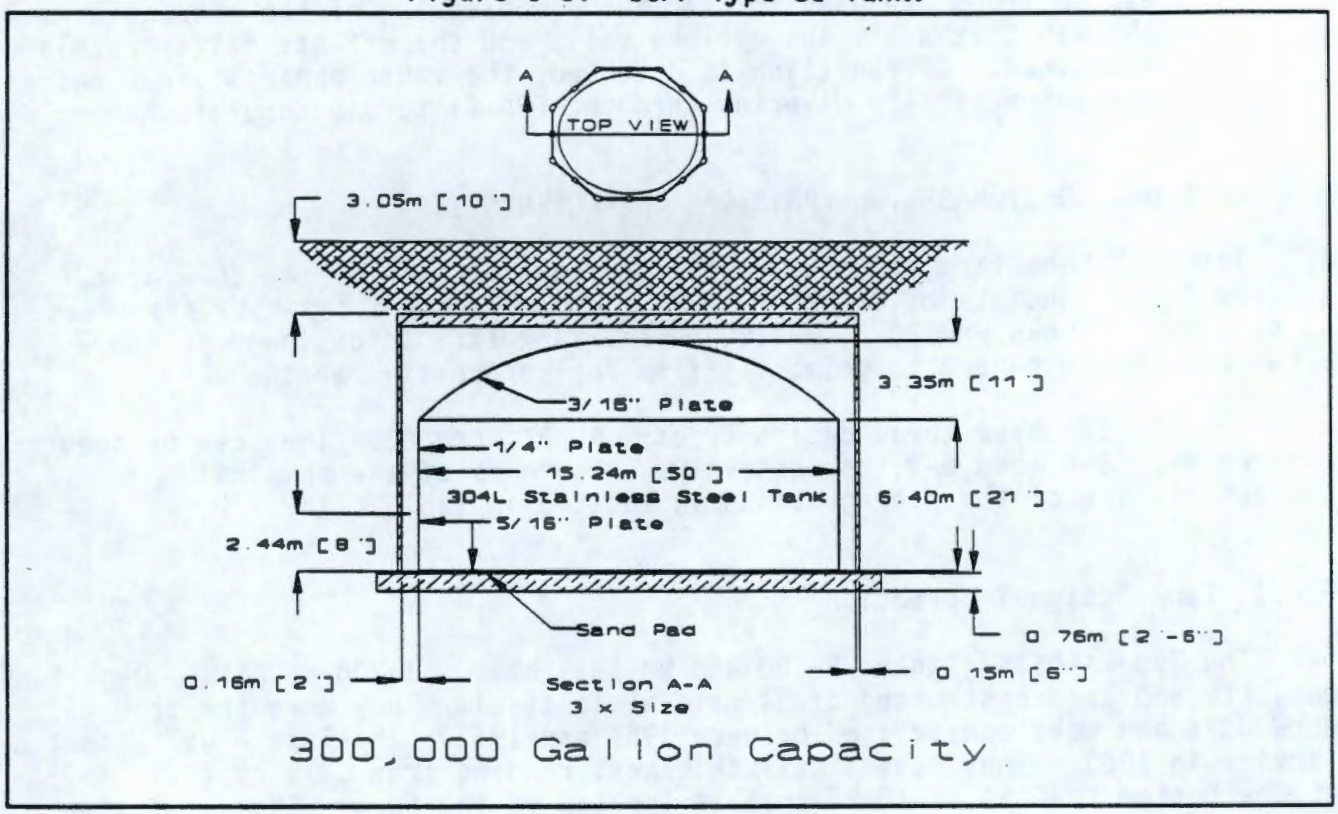

Figure 6-9. ICPP Type B2 Tank.

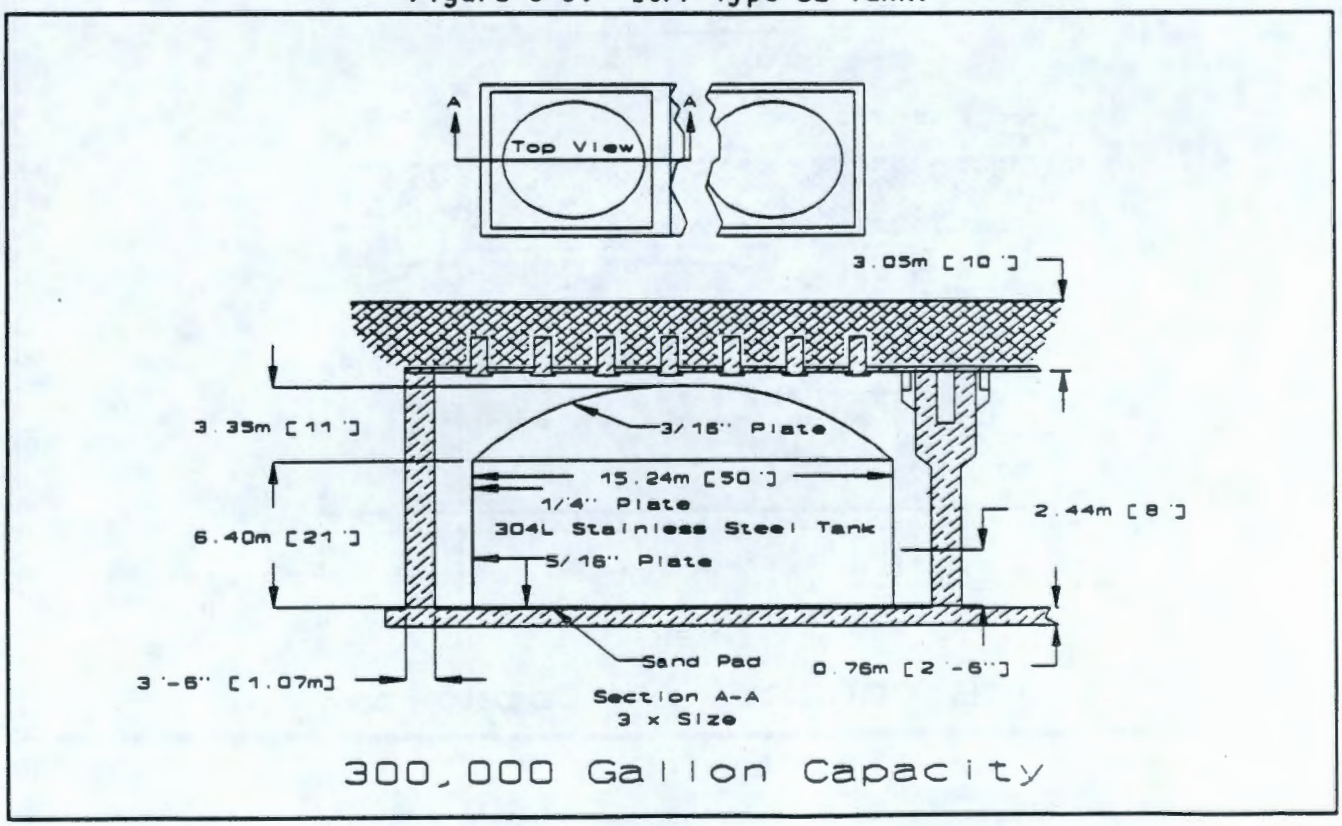

cooling coils are installed on the inner walls and floor of Tank WM-180. Waste stored within all 11 USTs generate between 590 to 8,800 W (2,000 and 30,000 Btu/h) of heat. Tank WM-181 is not equipped with cooling coils.

The Type B1 and B2 USTs (Tanks WM-182 to WM-190) have 1,140 m^3 (300,000 gal) capacities and are constructed of 304L stainless steel. They were constructed between 1955 and 1964 and generally entered service within 1 to 5 years. Exact service dates are listed in Table C-1. Tank WM-90 is a spare and has never held waste. The wall thicknesses are the same for the Type A tanks and most are also equipped with cooling coils (except Tanks WM-184 and WM-186).

6.6.2 Vault Design Information

Each UST is contained in a concrete vault as a secondary containment barrier. The Type A tanks are contained in individual cast-in-place octagonal concrete vaults. The Type B1 Tanks WM-182 to WM-186 are contained in octagonal pillar and panel concrete vaults. Vaults for Tanks WM-182 to WM-184 were built in 1954 of precast concrete components. Tanks WM-185 and WM-186 also are contained within pillar and panel type vaults; however, the later tanks (built in 1957) were modified to increase strength. The Type B2 tanks, WM-187 to WM-190, were built within rectangular cast-in-place concrete vaults. Vaults for Tanks WM-187 and WM-188 were built in 1958 and vaults for Tanks WM-189 and WM-190 were built in 1963. Each of these vaults contains two tanks and is constructed of cast-in-place concrete walls and a precast T-beam roof.

6.6.3 Idaho Chemical Processing Plant High-Level Liquid Waste Handling

The process equipment waste (PEW) system is designed to concentrate radioactive liquid waste generated at the INEL Site. Radioactive waste is collected in a central collection vessel and then routed to the PEW evaporators for separation into high- and low-level fractions. The evaporators concentrate the liquids by vaporizing the water and other volatiles. The high-activity fraction collected in the bottom of the evaporator is transferred to one of the ICPP HLLW storage tanks for processing HLW. The low-level vapors are collected, condensed, sometimes treated by ion exchange, and combined with the service waste system. The combined service waste stream is discharged to percolation ponds designed to accommodate continuous disposal of up to 9.5 m^3/min (2,500 gal/min) (EG&G 1984).

The PEW evaporator condensate is the source of over 90% of the radionuclides in the service waste stream during normal routine operations at the ICPP. Tritium is the principal radionuclide. Other significant radionuclides include ^{14}C, ^{129}I, ^{121}I, ^{137}Cs, ^{106}Ru, ^{90}Sr, and ^{238}Pu. The PEW evaporator condensate is also the major source of cadmium, chromium, fluoride, lead, mercury, and HNO_3 in the service waste stream. However, the PEW evaporator condensate flow comprises only about 0.4% to 0.5% of the total service waste stream flow (EG&G 1984).

6.6.4 Tank Monitoring Systems

The tanks are continuously monitored using pneumatic and radio frequency instruments (discussed below) to ensure containment and minimize corrosion. To date no tanks have leaked, and the tank corrosion coupons indicate minimal corrosion (EG&G 1984).

Each of the 11 USTs has between 4 to 5 risers for sampling of tank waste and for waste transfers. They range in diameter from 25 to 30 cm (10 to 12 in.). A mechanical arm has been developed at INEL that can be lowered down one of the sampling risers for inspecting the inner tank wall and sample collection. There is no access to the void between the tank and the vault inner wall. Figure 6-10 shows the general location of the different risers for each ICPP tank.

Figure 6-10. ICPP Waste Tank Riser Locations.

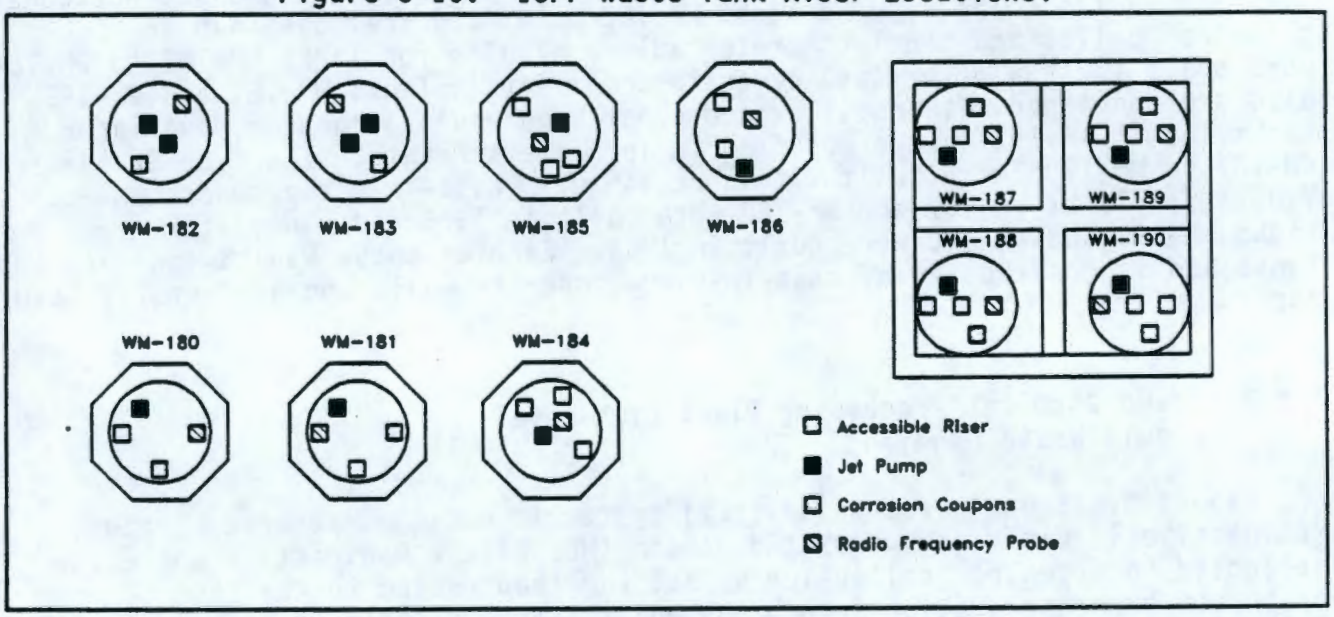

A network of monitoring systems has been established at the HLLW tank farm to perform continuous monitoring of the liquid waste in the tanks. These systems include liquid level monitoring, liquid density monitoring, vapor space monitoring, and liquid temperature monitoring. The original tank monitoring instrumentation was primarily pneumatic transmitters with an analog recorder. The current monitoring systems are advanced computer driven systems, some of which were developed and patented at ICPP. These systems use radio frequencies for transferring monitored information. One distinct advantage of the new systems is that information can be immediately retrieved and easily stored and manipulated for evaluation. In addition, the systems' online time is over 95%. The characteristics of the new radio frequency monitoring systems are outlined in Table 6-3.

6.7 UNDERGROUND STORAGE TANK WASTE PHYSICAL CHARACTERISTICS

Table 6-4 gives the approximate waste volumes and types for each of the 11 USTs. These waste types are produced at different steps within the uranium recovery process and are all in liquid form and extremely acidic (pH <1), primarily as HNO_3. Wastes have a water content between 70% and 76% and densities from 1.13 to 1.22 g/cm^3 (9.4 to 10.2 lb/gal). Figure 6-11 shows the relative percentage of waste volumes compared to tank operating capacities. A tank-by-tank listing is shown in Table C-1.

Table 6-3. Characteristics of Various Tank Liquid Monitoring Systems at ICPP.

Temperature monitors
Liquid temperatures recorded every 5 min and reported to the Waste Processing Computer System for storage and retrieval
Average tank liquid temperature is automatically printed out every 8 h
A temperature printout can be obtained at any time
Instrument range is -40 to 150 °C (-40 to 302 °F)
Instrument error is ±4 °C (±7 °F)
System is calibrated every 12 months
Alarm point is set at 35 °C (95 °F)
Liquid level monitoring
Developed and patented at ICPP
Level determination for each tank is recorded every 5 min
Data automatically printed every 8 h
A waste level printout can be obtained at any time
Tank volumes recorded before and after each transfer of waste
Calibrated every 12 months
System resolution is presently ±0.38 m^3 (±100 gal), which equates to ±0.08 in. (±0.2 cm) (resolution improvements are planned)
High alarm point is 1,080 m^3 (285,000 gal)
Level decrease alarm point is 0.57 m^3 (150 gal) change in 1 h
Tank leak detection system
Primary system--Uses tank level monitoring instruments to detect a tank volume decrease
Backup system--Measures the liquid level in the vault sump (this system is not the primary system because of the accumulation of water in the sumps from other sources, e.g., rain water)
The sump level recorder provides continuous indication of sump level and plots the data every 15 min
Sump levels are recorded every 20 s and readings are averaged every 2 min
Sump recorder data are automatically printed every 8 h
The instruments are calibrated every 12 months
The system online time is over 90%

ICPP = Idaho Chemical Processing Plant.

Table 6-4. ICPP Tank Waste Types and Volumes.

Tank number	Type of waste	Liquid	
		(m^3)	(gal)
WM-180	Concentrated sodium	556	147,000
WM-181	Dilute sodium	1,056	279,000
WM-182	Nonfluoride/aluminum	1,056	279,000
WM-183	Dilute sodium	1,056	279,000
WM-184	Concentrated sodium	1,050	277,000
WM-185	Concentrated sodium	1,070	282,000
WM-186	Dilute sodium	943	249,000
WM-187	Zirconium	678	179,000
WM-188	Zirconium	727	192,000
WM-189	Zirconium	488	129,000
WM-190	Spare	Empty	--
Total		8,680	2,292,000

Figure 6-11. Percentage of Operating Capacity Filled with Waste.

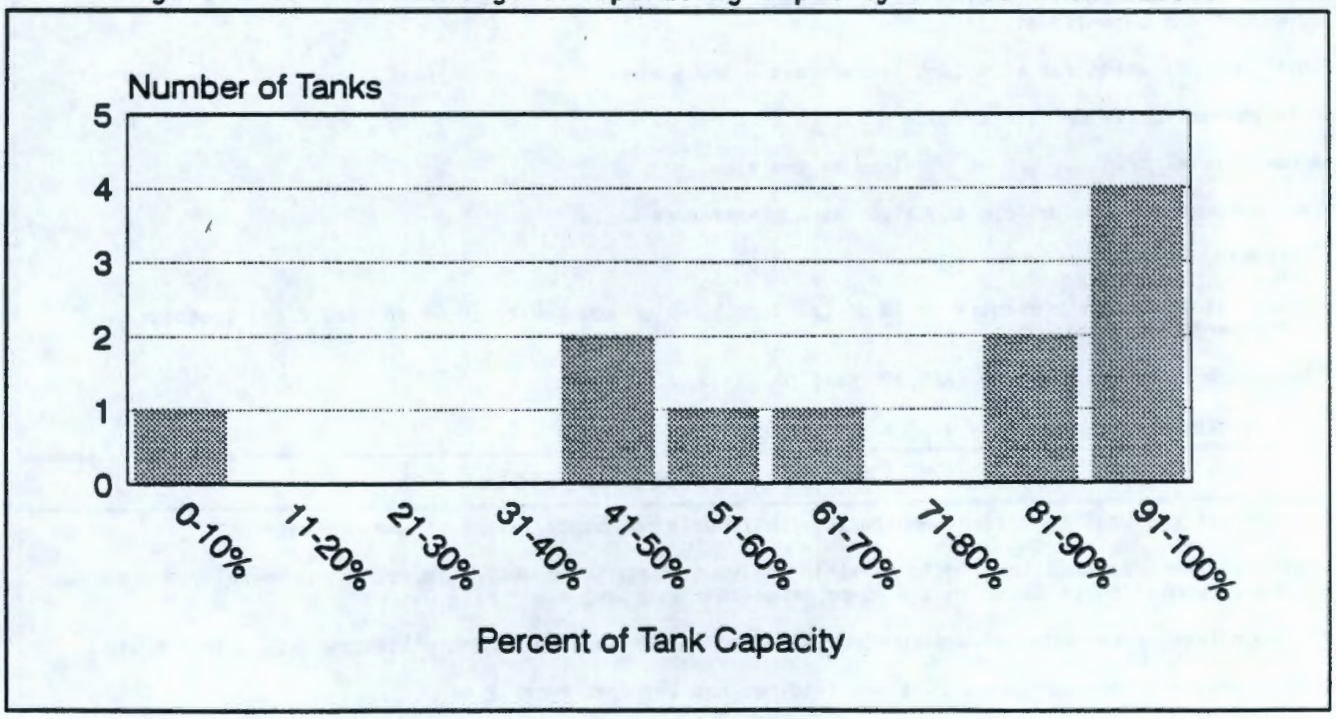

6.8 WASTE CHARACTERIZATION CAPABILITIES

The ICPP contains support facilities, including a remote analytical laboratory used for analyzing high-level radioactive samples and other support laboratories with extensive analysis capabilities for nonradioactive material.

A hot pilot plant, high-bay laboratory, and low-bay chemical engineering laboratory the provide the capability for pilot scale work. Facilities for doing remote maintenance studies and mockups also are available (EG&G 1984).

6.9 UNDERGROUND STORAGE TANK WASTE CHEMICAL CHARACTERISTICS

The waste stored in ICPP USTs is characterized by large concentrations of nitrates and dissolved metals such as aluminum, potassium, and sodium, with small concentrations of sulfates, chlorides, and heavy metals such as chromium and nickel. Table 6-5 gives the chemical compositions for the three primary waste types. Waste chemical totals for the most prevalent chemical species within the waste are listed in Table 6-6. Chemical totals for individual tanks are listed in Table C-2.

Table 6-5. ICPP High-Level Waste Chemical Compositions (wt%).

Component	Zirconium	Aluminum	Sodium
Acid, N	1.75	1.83	1.47
Al	0.742	1.51	0.8 - 1.6
B	0.241	0.003	0.005 - 0.01
Ca	--	0.27	0.03 - 0.2
Cl^-	--	0.023	0.06 - 0.1
Cd	--	1.42	--
Cr	0.0087	0.036	--
F^-	5.99	0.032	0.005 - 0.06
Fe	0.023	0.19	0.05 - 0.09
H	0.18	0.12	0.03 - 0.15
K	--	0.33	0.03 - 0.15
Mg	--	0.062	--
Mn	0.0004	0.048	--
Na	--	1.31	2.1 - 4.0
Ni	0.0049	0.016	--
NO_3^-	11.47	23.1	19.4 - 23.0
SO_4^{-2}	1.52	0.65	0.33 - 0.5
Zr	3.8	--	--
H_2O	76.0	70.9	76.6 - 69.2
Total	100.0%	100.0%	100.0%
Density (g/cm^3)	1.13	1.21	1.22

Source: ORNL 1991.

Table 6-6. Estimated ICPP Tank Chemical Mass Totals.

Component	Mass		Percent
	(kg)	(lb)	
Cl^-	11,570	25,500	0.1
F^-	141,500	311,900	1.3
NO_3^-	2,061,000	4,543,000	19.4
SO_4^{-2}	71,700	158,000	0.7
Al	120,800	266,400	1.1
Ca	10,520	23,200	0.1
Cr	680	1,500	0.0
Fe	6,490	14,300	0.1
Mg	820	1,800	0.0
Ni	360	800	0.0
K	11,290	24,900	0.1
Na	230,700	508,500	2.2
Others	164,400	362,500	1.5
H_2O	7,788,000	17,170,000	73.3
Totals	10,619,830	23,412,300	99.9

6.10 UNDERGROUND STORAGE TANK WASTE RADIOLOGICAL CHARACTERISTICS

The principal radionuclides in the tank waste include uranium and plutonium isotopes, fission products such as ^{90}Sr and ^{137}Cs, and decay products. The specific activity of the waste averages 0.88 Ci/L (3.33 Ci/gal) (ORNL 1991). This activity produces 1 to 4 W/m^3 (0.013 to 0.052 Btu/h/gal) of heat, which is removed via cooling coils. This translates to 890 to 8,500 W (2,000 to 29,000 Btu/h) of heat produced per tank. Radiation fields vary from 0.1 to >50 R/h for the different tanks. Radiation field strength is measured via corrosion coupons. A summary of the radionuclide totals per tank is given in Table C-3.

Table 6-7 describes the radionuclide concentrations for the three ICPP waste types. Table 6-8 lists totals of the most prevalent radionuclides within the USTs. Table 6-9 gives the results of radiation studies of corrosion coupons that were exposed to the HLLW.

Table 6-7. ICPP High-Level Waste Radionuclide Composition (mCi/L).

Nuclide	Zirconium	Aluminum	Sodium
^{90}Sr	362	658	80
^{106}Ru	--	11	5
^{137}Cs	368	651	95
^{137}Ce	2	42	3
^{239}Pu	--	3	2
Decay heat, W/m^3	4	8	1

Table 6-8. Estimated ICPP Tank Radionuclide Content.

Radionuclide	Activity	Mass	
	(Ci)	(kg)	(lb)
^{239}Pu	149,400	2,410	5,310
^{144}Ce	667,200	0.21	0.46
^{137}Cs	19,700,000	228	502
^{90}Sr	16,850,000	122	269
Totals	37,366,600	2,760.21	6,081.46

Table 6-9. Estimated HLLW ICPP Radiation Levels.

Tank ID	Radiation level*
180	0.35R/0.04R
181	1R/0.05R
182	20R/5R
183	>50R/10R
184	1R/0.15R
185	--
186	7R/0.7R
187	30R/10R
188	>50R/10R
189	2R/2R
190	Background

*Beta-gamma/gamma values based on surveys performed on extracted corrosion coupons.

6.11 FACILITIES FOR PROCESSING RETRIEVED TANK WASTE

The primary radioactive waste management facilities at the INEL Site are located at the ICPP and the Radioactive Waste Management Complex. The ICPP processes and stores liquid radioactive waste received from other INEL facilities and from internally generated sources. Liquid radioactive wastes processed at the ICPP consist primarily of waste generated during processing of nuclear fuel. The liquid wastes are classified as service wastes, LLWs, and HLWs and are defined as follows (EG&G 1984):

- Service wastes contain little or no radioactivity and are discharged to a percolation pond after monitoring.

- LLWs are generated by plant operation or from equipment decontamination. These wastes are split into two streams by evaporation or ion exchange. One stream is concentrated to HLLW. The second stream is discharged to a percolation pond upon meeting a release criteria.

- HWLs are fission product wastes from the fuel reprocessing extraction. First-cycle extraction waste streams, relatively high in radioactivity, are checked for uranium content and then usually evaporated to reduce the volume. The concentrate is stored in underground stainless steel tanks located at the ICPP facility until solidification by calcinating is complete. After calcining, the solids are placed in long-term, retrievable storage bins. An outline of present and future waste treatment operations for HLLW is shown in Figure 6-12.

The Radioactive Waste Management Complex disposes of INEL-generated, low-level, beta-gamma contaminated solid wastes and also stores retrievable contact-handled and remote handled transuranic wastes.

6.12 SOIL AND GROUNDWATER CONTAMINATION

Radionuclide and chemical groundwater contaminant plumes at the INEL Site are attributed to past waste-disposal practices. The horizontal extent of the plumes is defined from routine samples taken from groundwater monitoring wells at the INEL Site. Radionuclide and chemical constituents detected in groundwater at the INEL Site include tritium, ^{90}Sr, ^{60}Co, ^{137}Cs, ^{238}Pu, $^{239/240}Pu$, ^{241}Am, and chromium, sodium, chlorides, and nitrates. The largest of these contaminant plumes originates at the ICPP. In 1987, 12 purgeable organic compounds were detected locally in the groundwater at the INEL Site (Mann and Knobel 1987). Concentrations of these compounds during 1988 to 1989 are documented in a report by L. J. Mann (1990).

Specifically, elevated concentrations of ^{137}Cs, tritium, ^{90}Sr, and ^{241}Am have been observed in groundwater samples collected from the perched water zones beneath the ICPP tank farm area as mentioned previously. Currently, remediation strategies for the restoration of the perched water underlying the ICPP are being addressed (Woznievicz et al. 1991). To date none of the 11 HLLW USTs at ICPP has been confirmed to have leaked waste to the surrounding soil.

Figure 6-12. Treatment Operations for ICPP HLLW.

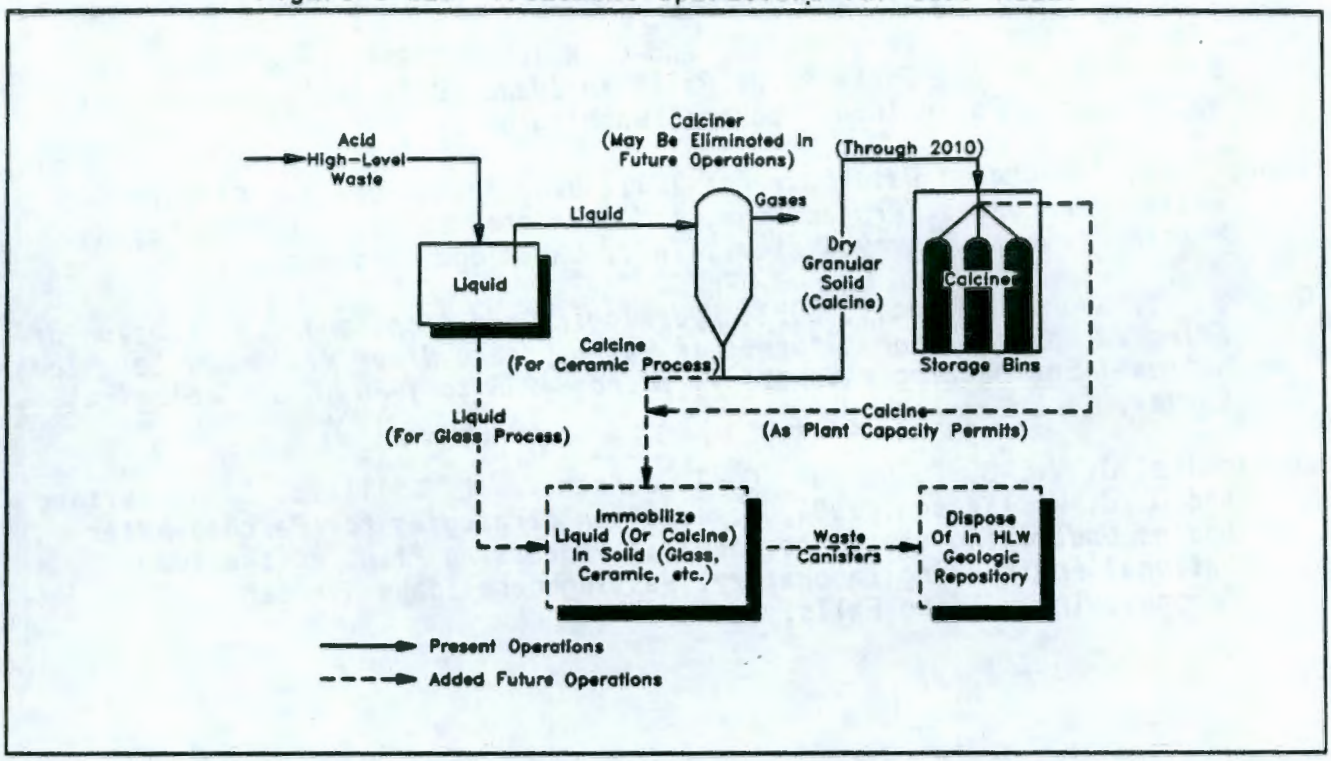

6.13 REFERENCES

Anderson, S. R., 1990, *A Preliminary Geohydrologic Evaluation of Basalt and Sediment Underlying the Snake River Plain at the Idaho National Engineering Laboratory*, Geological Society of America, Abstracts with Programs, 86th Annual Meeting, Cordilleran Section, v. 22, no. 3., Boulder, Colorado.

Anderson, S. R., 1991, *Stratigraphy of the Unsaturated Zone and Uppermost Part of the Snake River Plain Aquifer at the Idaho Chemical Processing Plant and Test Reactors Area, Idaho National Engineering Laboratory, Idaho*, U.S. Geological Survey Water-Resources Investigations Report 91-4010, DOE/ID-22095, Water-Resources Investigations Report 91-4047, U.S. Department of Energy, Idaho Operations Office, Idaho Falls, Idaho.

EG&G, 1984, *INEL Environmental Characterization Report*, Vols. I, II, and III, EGG-NPR-6688, EG&G Idaho, Inc., Idaho Falls, Idaho.

Mann, L. J., and L. L. Knobel, 1987, *Purgeable Organic Compounds in the Ground Water at the Idaho National Engineering Laboratory, Idaho*, U.S. Geological Survey Open-File Report 87-776, DOE/ID-22076, U.S. Department of Energy, Idaho Operations Office, Idaho Falls, Idaho.

Mann, L. J., 1990, *Purgeable Organic Compounds in Ground Water at the Idaho National Engineering Laboratory, Idaho -- 1988 and 1989*, U.S. Geological Survey Open-File Report 90-367, DOE/ID-22089, U.S. Department of Energy, Idaho Operations Office, Idaho Falls, Idaho.

Mundorff, M. J., E. G. Crosthwaite, and C. Kilburn, 1964, *Groundwater for Irrigation in the Snake River Basin in Idaho*, U.S. Geological Survey Water Supply Paper 1654, Spokane, Washington.

ORNL, 1991, *Integrated Data Base for 1991: U.S. Spent Fuel and Radioactive Waste Inventories, Projections, and Characteristics*, DOE/RW-0006, Rev. 7, Martin Marietta Energy Systems, Inc., Oak Ridge, Tennessee.

Orr, B. R., and L. D. Cecil, 1991, *Hydrologic Conditions and Distribution of Selected Chemical Constituents in Water, Snake River Plain Aquifer, Idaho National Engineering Laboratory, Idaho, 1986 to 1988*, U.S. Geological Survey.

Wozniewicz, J. V., B. F. Russel, C. I. Jensen, J. L. Williams, C. J. Martin, and D. J. Williamson, 1991, *Remediation Strategies for Perched Water Bodies Underlying the Idaho Chemical Processing Plant at the Idaho National Engineering Laboratory*, Westinghouse Idaho Nuclear Company, Inc., Idaho Falls, Idaho.

7.0 OAK RIDGE SITE, TENNESSEE

This section provides a detailed description of the LLW storage tanks at the Oak Ridge site, in Oak Ridge, Tennessee. A general site description of the facilities, environmental conditions, fuel processing activities, and waste storage methods is provided. The information is based on referenced documents and interviews with ORNL personnel.

7.1 OAK RIDGE SITE INTRODUCTION AND HISTORY

The Oak Ridge site was established in the early 1940's as the "Manhattan Project" location for the graphite reactor that was to serve as a prototype for the plutonium production reactors at the Hanford Site. The location of the Oak Ridge site is shown in Figure 7-1. The "Hot Pilot Plant" was constructed to allow reprocessing of the graphite reactor fuel for plutonium recovery and process development. The graphite reactor and Hot Pilot Plant, along with associated support units, made up the core of operation at Oak Ridge for several years. It was also the site where enrichment uranium

Figure 7-1. Oak Ridge Site Location.

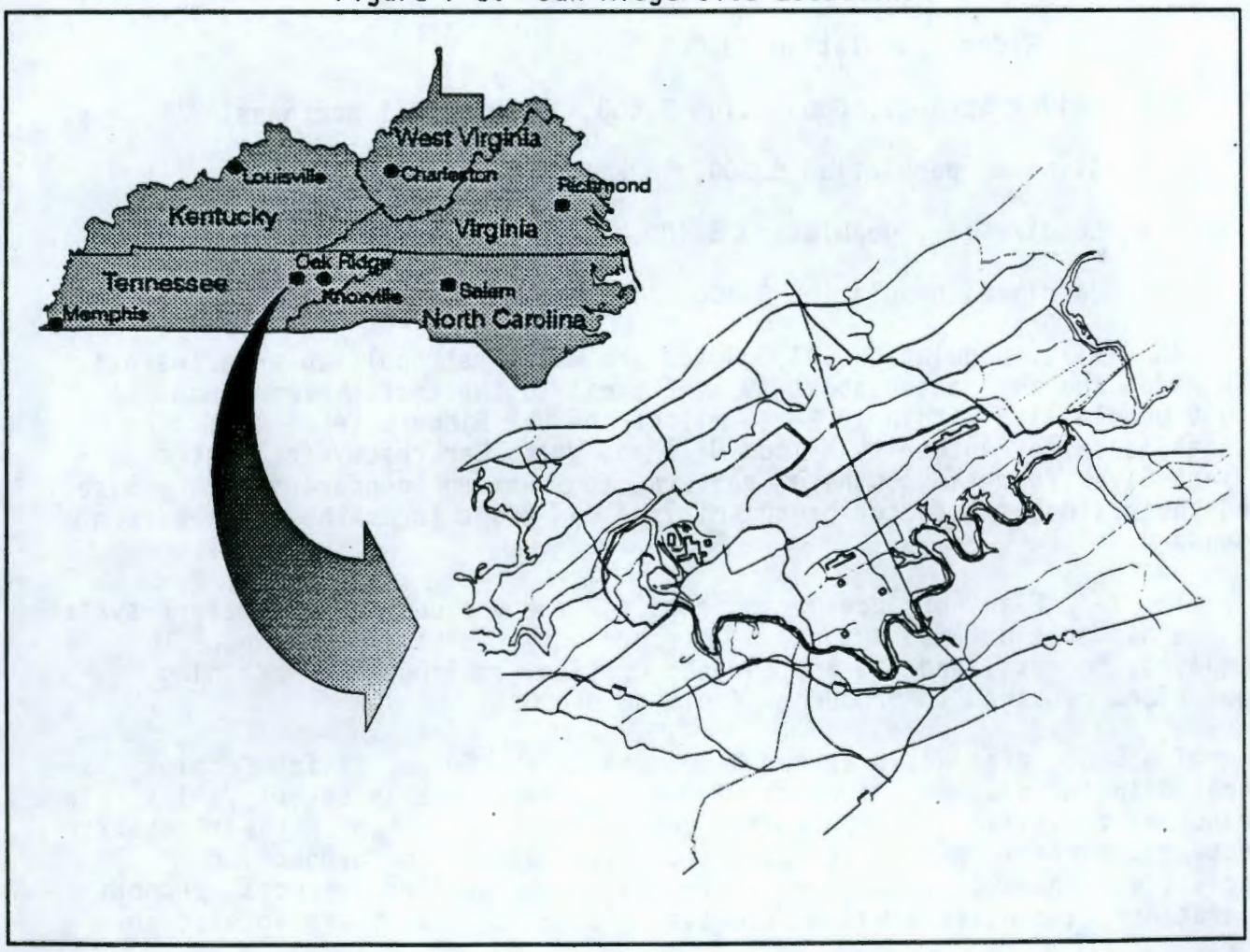

was produced for military and later commercial uses. From initial startup, large quantities of fission products and uranium waste solutions as well as solid radioactive wastes were generated. Today, the Oak Ridge site consists of three major operating facilities: the Y-12 Plant, the ORNL, and the ORGDP.

7.2 OAK RIDGE SITE DESCRIPTION

The Oak Ridge site is located within the corporate limits of the city of Oak Ridge, in eastern Tennessee. The site currently occupies 235 km^2 (91 mi^2) of land and is shown in Figure 7-2.

The Oak Ridge site is predominantly to the west and south of the population center of the city. The site area lies in a valley between the Cumberland and southern Appalachian mountain ranges and is bordered to the southeast by the Clinch River. The Cumberlands are about 16 km (10 mi) northwest; 113 km (70 mi) to the southeast are the Great Smoky Mountains. Except for the city of Oak Ridge, the land within 8 km (5 mi) of the Oak Ridge site is predominantly rural and used largely for residences, small farms, and pasture land. Fishing, boating, waterskiing, and swimming are popular recreational activities in the area. The approximate locations and populations (1980 census data) of the towns nearest the site are as follows:

- Oak Ridge, population 28,000
- Oliver Springs, population 3,600, 11 km (7 mi) northwest
- Clinton, population 5,300, 16 km (10 mi) northeast
- Lenoir City, population 5,400, 11 km (7 mi) southwest
- Harriman, population 8,300, 13 km (8 mi) west.

Knoxville, population 183,000, is the major metropolitan area nearest Oak Ridge and is located about 40 km (25 mi) to the east. Fewer than 5,000 people live within 10 km (6 mi) of the Oak Ridge site center. The Tennessee Valley Authority Melton Hill and Watts Bar reservoirs on the Clinch River form the southern, eastern, and western boundaries of the site, and the residential sector of the city of Oak Ridge forms the northeastern boundary.

The Y-12 Plant produces components for the various nuclear weapon systems in the nation's defense arsenal. This process involves converting ^{235}U compounds to metal and the appropriate casting, rolling, and machining operations required to produce a finished product.

The ORNL, also known as the X-10 Site or the Bethel Valley Complex, is located in the southwest portion of the Oak Ridge site in Bethel Valley. The principal facilities located at the central site consist of nuclear research reactors, particle accelerators, hot cells, radioisotope production facilities, research facilities in the basic and applied sciences, support operations, and waste management units. Other facilities are located in

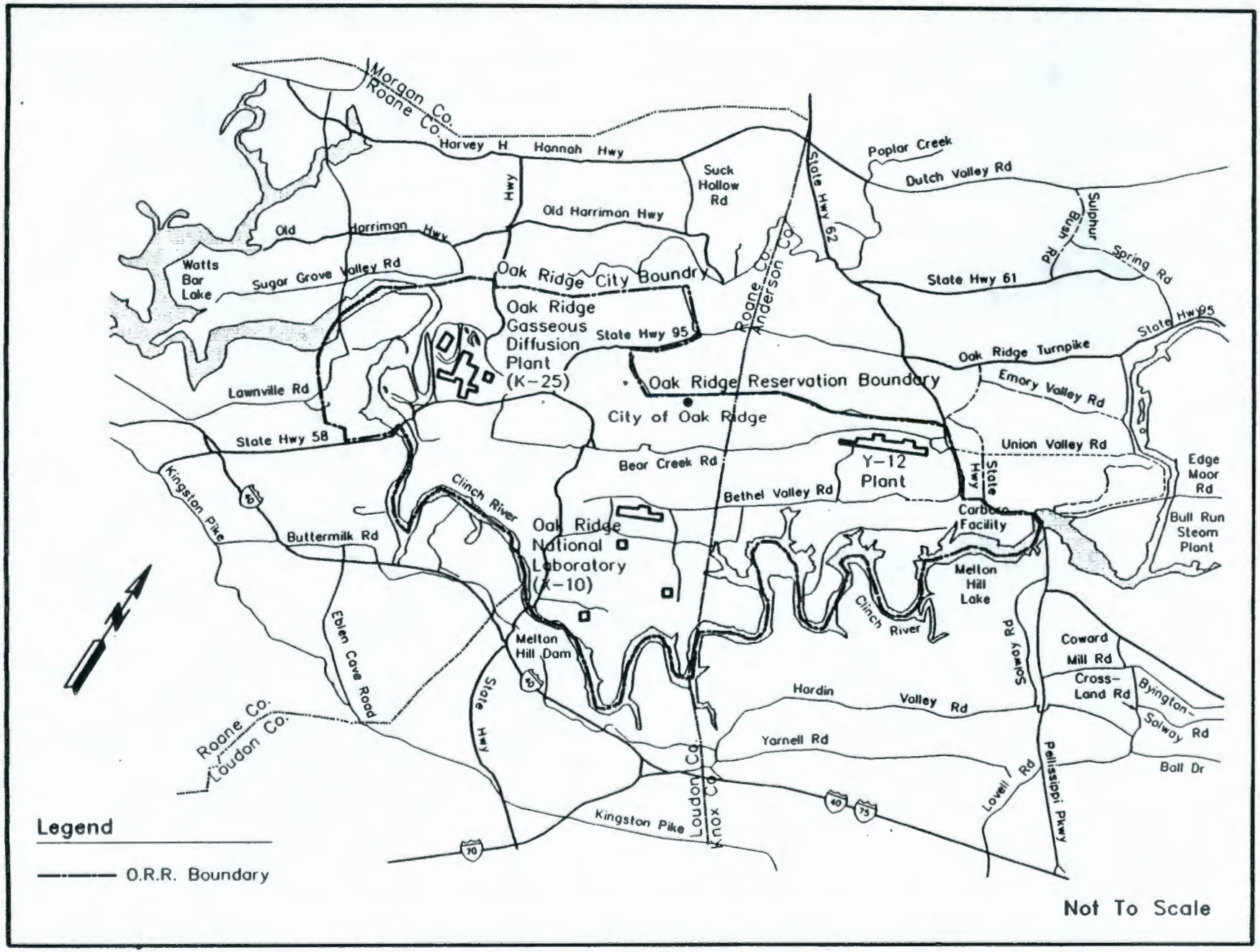

Figure 7-2. Oak Ridge Site Map.

satellite areas in the proximity of the main plant site. These include research reactors, fuel reprocessing facilities, and waste treatment, storage, and disposal units. Figure 7-3 shows ORNL as a whole, and Figure 7-4 shows the southern part of the ORNL in the Melton Valley, and Figure 7-5 shows the ORNL Main Plant Area located in Bethel Valley.

The ORGDP, also known as the K-25 Plant or the Melton Valley Complex, was a production and development facility for uranium enrichment for both nuclear weapons and power productions. It separated ^{235}U from ^{238}U by repeatedly passing uranium hexafluoride gas through a porous membrane. In August 1985, the gaseous diffusion process at the ORGDP was placed in a "ready standby" mode because of declining demands for enriched uranium. Since that time, the decision to permanently shut down the gaseous diffusion cascade has been made. In addition to operating the gaseous diffusion process, ORGDP personnel were involved in developing and demonstrating more energy-efficient and cost-effective methods for uranium enrichment. Two such methods under development at the ORGDP were the gas centrifuge process and the atomic vapor laser isotopic separation system. In 1986, the atomic vapor laser isotopic separation work at the ORGDP was significantly reduced.

7.3 AMBIENT WEATHER AND CLIMATE CONDITIONS

This section states the climatic conditions, precipitation rates, and typical wind patterns for the area surrounding the Oak Ridge site.

7.3.1 Climate

Oak Ridge has a temperate climate with warm, humid summers and cool winters typical of the humid southern Appalachian region. The local climate is noticeably influenced by topography. Differences in elevation have a measurable influence on the changes in climate along a northwest-southeast axis. No extreme conditions prevail in temperature, precipitation, or winds. Spring and fall are usually long, and the weather is normally sunny with mild temperatures. Severe storms such as tornadoes or high-velocity winds are rare. The mountains frequently divert hot, southeasterly winds that develop along the southern Atlantic coast.

7.3.2 Precipitation

From 1948 through 1983, the mean annual precipitation at Oak Ridge was 138.7 cm (54.6 in.), ranging year-to-year from 95 to 194 cm (37.4 to 76.3 in.). In this region, the heaviest precipitation normally occurs during winter and early spring, with the monthly maximum normally occurring from January to March. Winter storms are generally of low intensity and long duration. Another peak in rainfall occurs in July when short, heavy rains associated with thunderstorms are common. Typically in October, slow-moving, high-pressure cells suppress rain and, while remaining nearly stationary for many days, provide mild, clear, dry weather. As a result, October (as well as September) is usually the driest month. A trace or more of snow has been

Figure 7-3. Oak Ridge National Laboratory.

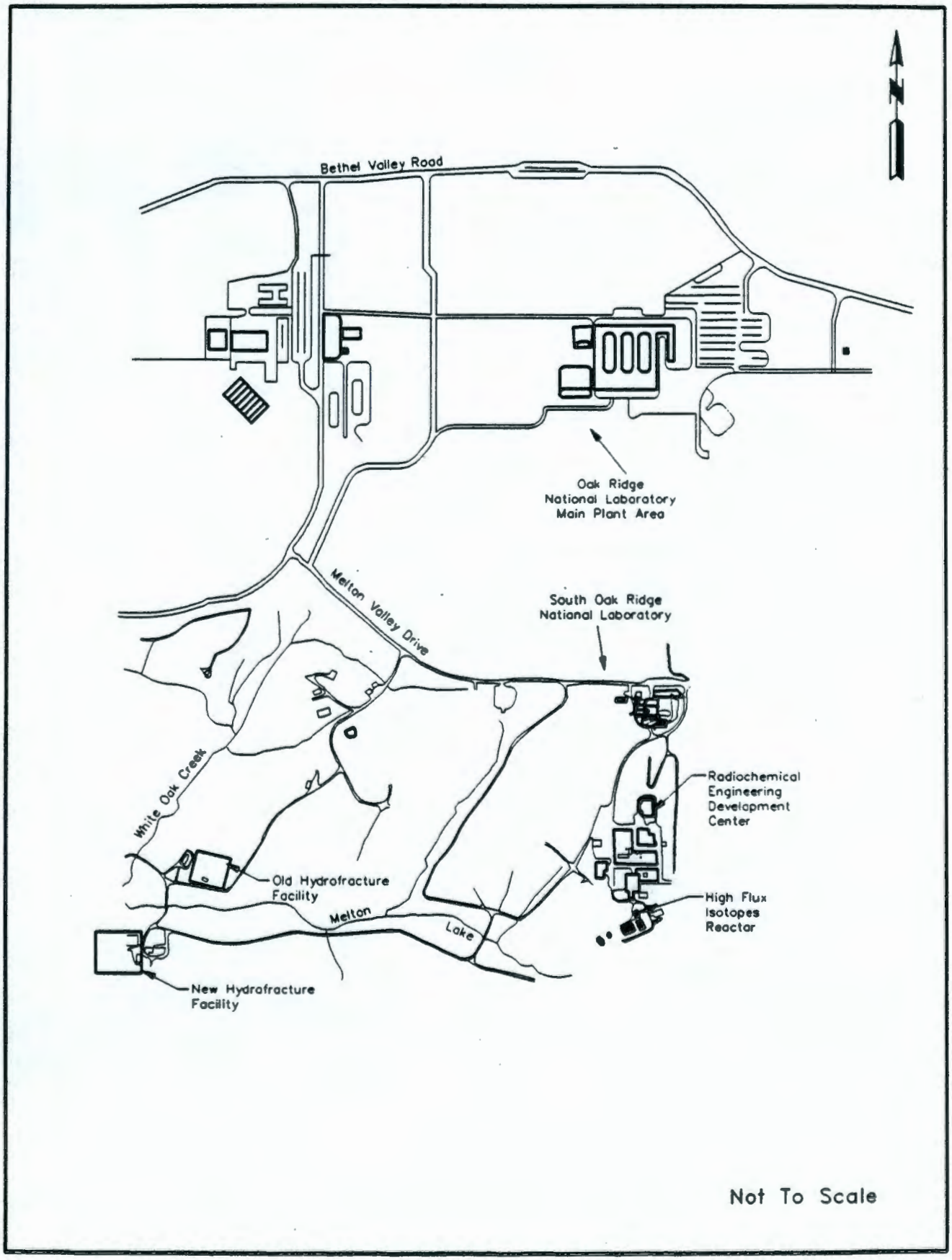

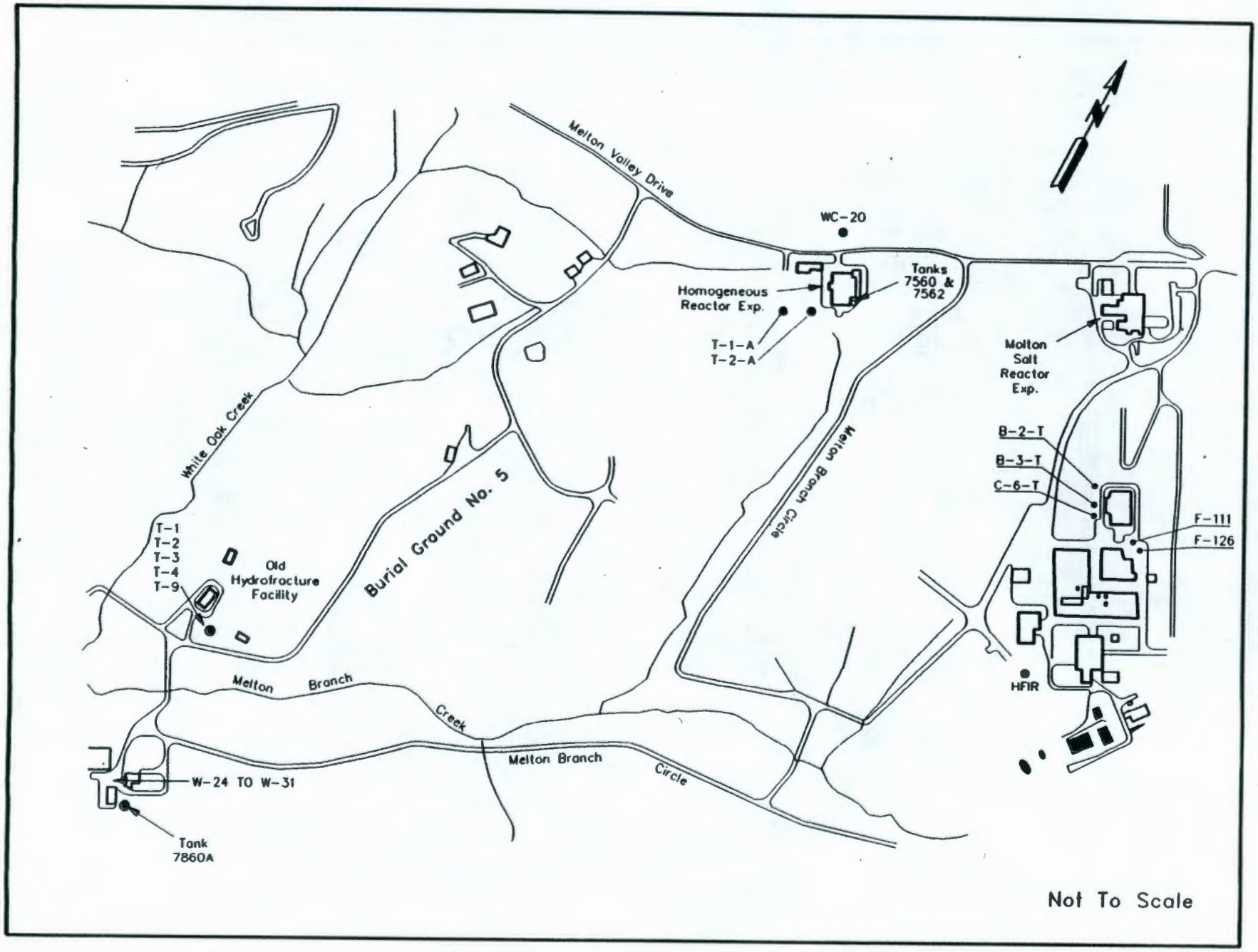

Figure 7-4. South Oak Ridge National Laboratory.

Figure 7-5. Oak Ridge National Laboratory Main Plant Area.

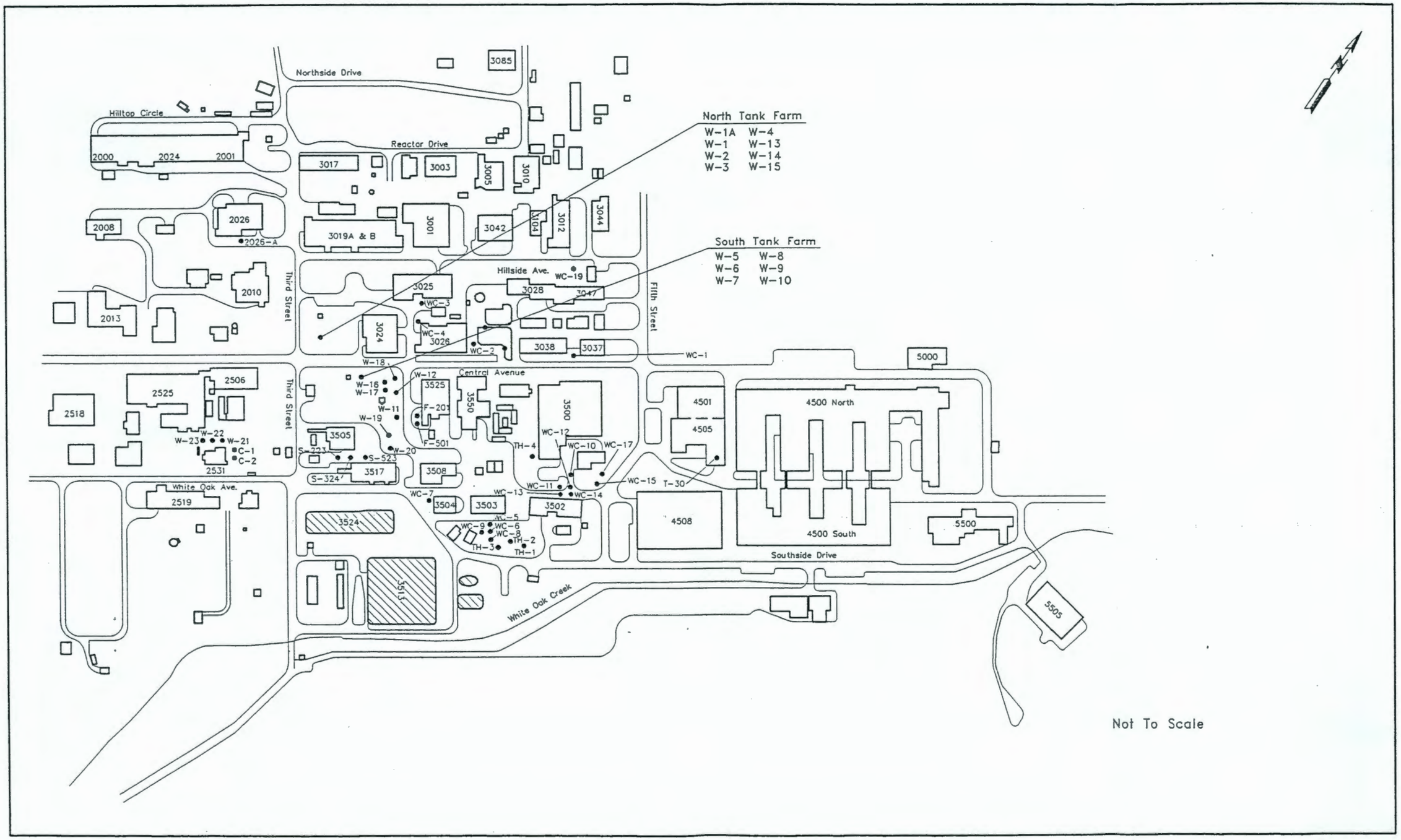

reported each winter on record with an annual average snowfall of 26.4 cm (10.4 in.). According to the *Climatic Atlas of the United States* (U.S. Department of Commerce 1979), mean lake evaporation in the Oak Ridge area is 89 cm (33 in.).

7.3.3 Wind

Oak Ridge is one of the country's calmest wind areas. The prevailing winds, as measured at an onsite meteorological tower, are from the southwest and northeast under both stable and unstable conditions. Average monthly wind speeds range from 1.6 m/s (5.2 ft/s) in October to 2.5 m/s (8.2 ft/s) in April. Because of the calm conditions, providing relief from the summer humidity through ventilation is difficult. The atmosphere can be considered to be in an inversion status about 36% of the time. The daily up- and down-valley winds, however, provide some diurnal exchange. The prevailing wind directions are northeasterly (up-valley) and southwesterly (down-valley). Poor air dilution (and thus the primary air pollution episodes) occurs with the greatest frequency and severity during October.

7.4 GEOLOGICAL AND HYDROLOGICAL CONDITIONS

Oak Ridge is located in the Valley and Ridge physiographic province, a belt of faulted and folded rock that lies between the Blue Ridge subdivision of the Appalachians to the southeast and the Appalachian Plateau to the northwest. The Valley and Ridge Province extends from Pennsylvania to Alabama where its possible continuation in an arc curving to the west is obscured by a cover of younger deposits. In the Oak Ridge area, the province is about 81 km (50 mi) wide and is marked by a series of great overthrust faults, in each of which a layer of rock very roughly 3.2 km (2 mi) thick has moved as much as several tens of miles to the northwest, overriding the similar sheet of rock in front of it and in turn overridden by the sheet behind it.

Since the latter part of the Appalachian Revolution, when the thrust sheets were formed, at least 3 km (10,000 ft) of rock has been removed by erosion. The fault sheets, as presently exposed, are each bounded below by one of the major overthrust fault planes and above by a fault plane or an erosion surface, so that both the top and bottom of the original stratigraphic column are missing. A geologic section through the described formations is shown in Figure 7-6 (Weeren et al. 1974).

7.5 PROCESS DESCRIPTION

The ORNL employs two systems for handling and processing liquids that contain radioactive constituents: the ORNL Liquid Low-Level Waste Concentration system (Figure 7-7) and the Process Waste System (PWS). The PWS handles all liquid waste that contains trace amounts of radioactivity, heavy metals, and organics, or have the potential to be contaminated with these constituents. The Liquid Low-Level Waste Concentration System handles waste solutions with a significant amount of radioactivity, including waste streams

Figure 7-6. Oak Ridge Geological Cross Section.

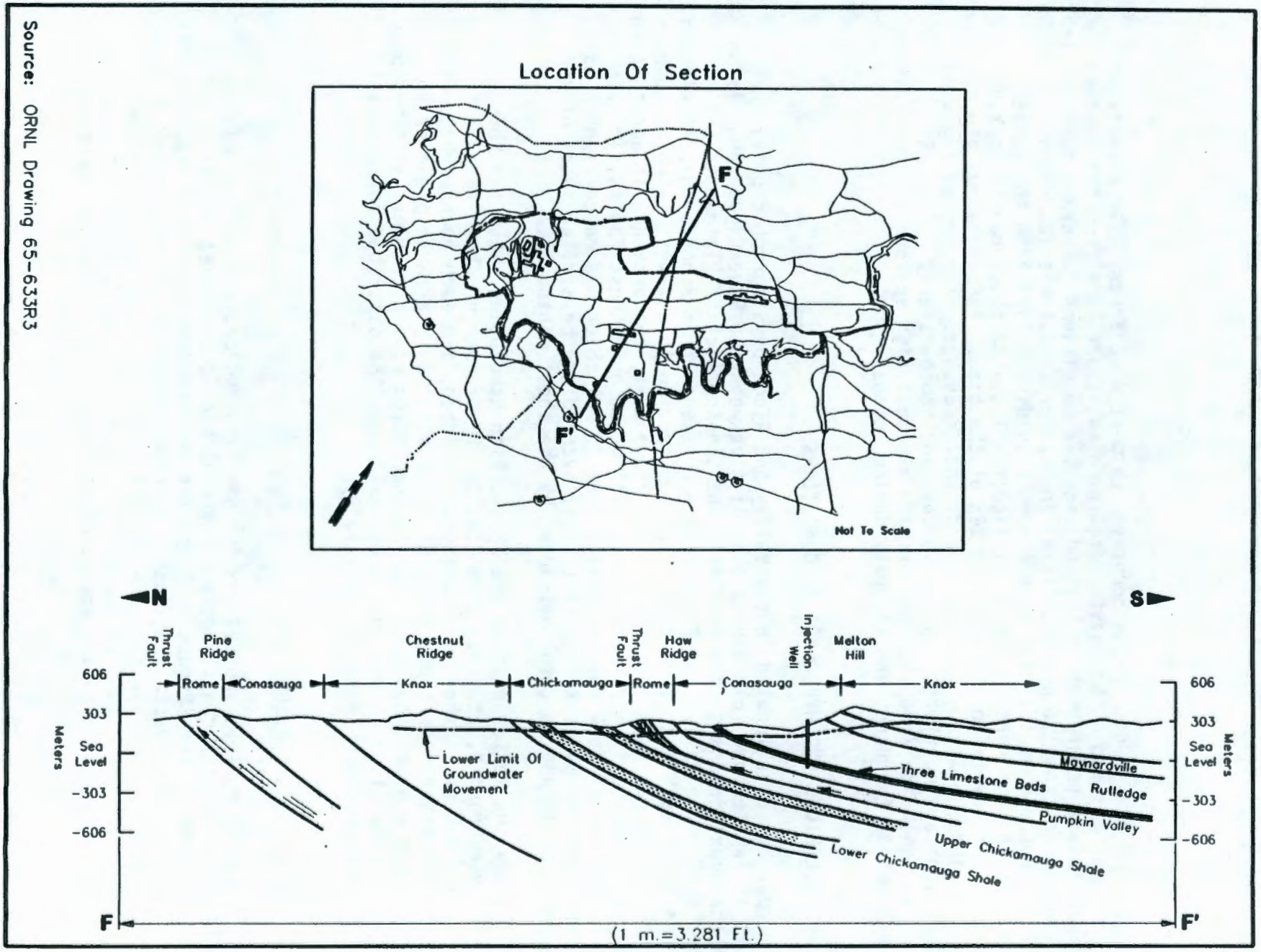

Source: ORNL Drawing 65-633R3

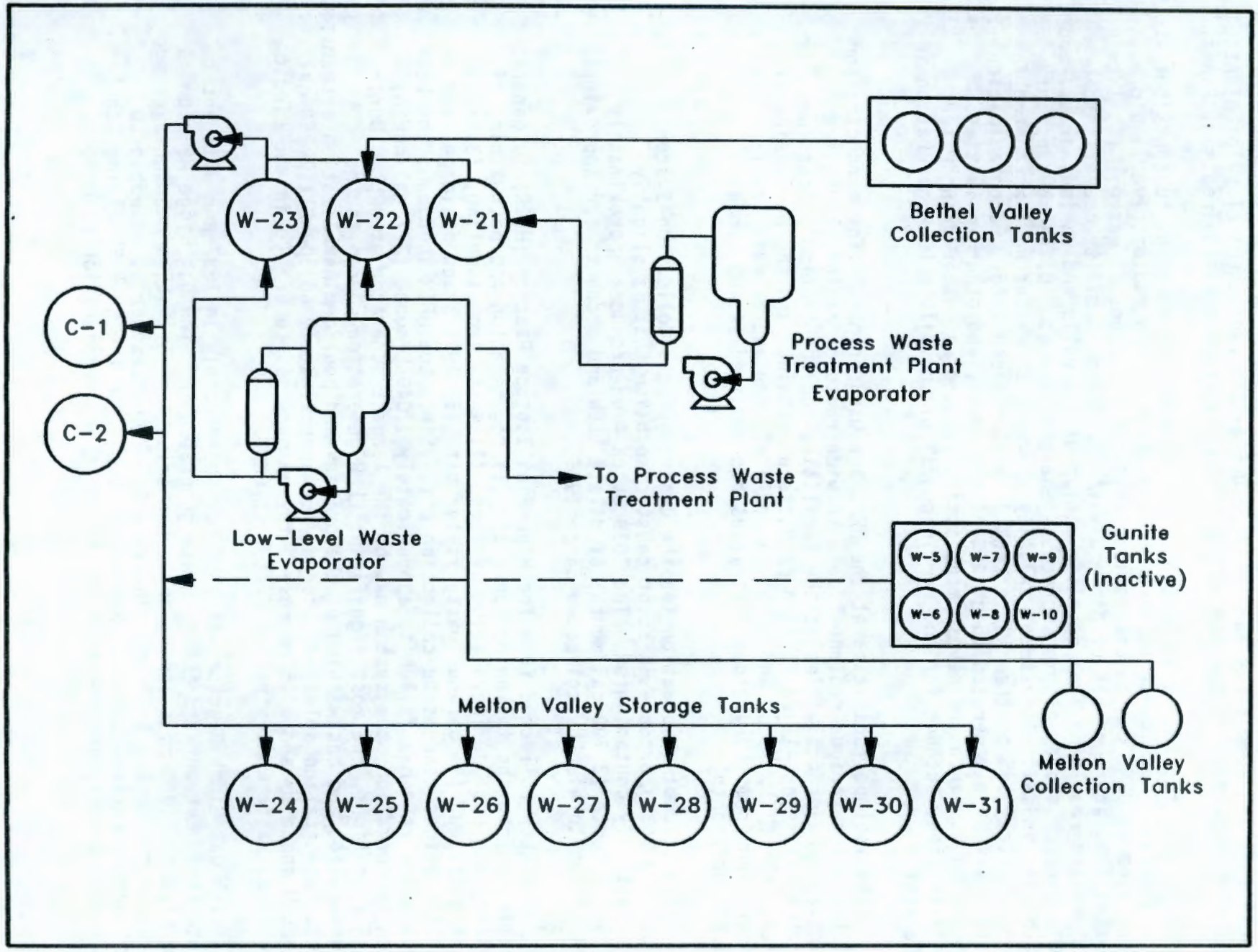

Figure 7-7. ORNL Liquid Low-Level Waste Concentration System.

originating from hot sinks and drains in the research and development facilities and from other facilities, such as the radiochemical pilot plants, nuclear reactors, and the concentrate from the Process Waste Treatment Plant.

Several facilities at ORNL have contributed and continue to contribute to the generation of low-level liquid waste (LLLW). The radioactive liquid waste generated at ORNL can be categorized into several types of waste: (1) liquid wastes that are a result of air and water treatment facility operations, (2) wastes resulting from decontamination of hot cells and various areas, and (3) research and development process-generated wastes. Of these types of LLLW, air and water treatment facility operations' wastes have accounted for approximately 34% of the dilute LLLW generated since 1986. Decontamination activities have generated about 45% of the waste, and other activities, including research and development activities and rainwater/groundwater infiltration, account for the remaining 21% of the dilute LLLW generation in the past 3 yr.

The isotope facilities at the ORNL are used primarily for producing and distributing various radionuclides. A wide range of radionuclides are handled. Major activities at the facilities include tritium processing, ^{85}Kr enrichment, short-lived fission products processing, and the processing of ^{137}Cs, ^{90}Sr, ^{129}I, ^{154}Eu, and ^{238}Pu. Since 1987, the approximate level of LLLW generation from the isotope facilities has remained 14,400 L/month (3,800 gal/month).

The scrubbing operation for the Central Offgas Collection System (Building 3039) produces a spent caustic solution that is slightly radioactively contaminated. The 3039 Stack Area produces approximately 14,000 L/month (3,700 gal/month) of dilute LLLW and accounts for approximately 11% of the total LLLW collected since 1986.

The LLLW collected from the High-Flux Isotope Reactor (HFIR) is generated primarily from the following sources: (1) regeneration and backwashing of primary and pool demineralizing systems, (2) waste from sampling, (3) head tank overflow, (4) gaseous waste filter pit, (5) 7911 stack drainage, and (6) the offgas condensate collection pit. Since the HFIR shutdown, the LLLW generation rate has fallen to approximately 1,040 L/month (277 gal/month). When in operation, the system may be the largest generator at ORNL. During HFIR operations, the most significant LLLW generation source is the regeneration and backwashing of the primary and pool demineralization systems. These regeneration solutions account for approximately 66,300 L (17,250 gal) of LLLW annually and also represent the primary source of ^{60}Co in the Liquid Low-Level Waste Concentration System at ORNL.

The Oak Ridge Reactor was shut down permanently in 1987 and will not be restarted. Current and future waste generated from the Oak Ridge Reactor is the result of decommissioning and decontamination activities and ion-exchange column regenerant solutions. The Bulk Shielding Reactor is expected to continue operation at ORNL. Sources of LLLW from the Bulk Shielding Reactor are cooling water and ion-exchange column spent regeneration solutions.

Large quantities of ^{137}Cs (approximately 350,000 Ci/yr) and ^{90}Sr (approximately 500,000 Ci/yr) are processed at Building 3517. Other materials that might be processed are ^{60}Co and ^{192}Ir. Materials that have been handled in the past include ^{144}Cs and ^{147}Pm. Building 3517 is the primary source of both cesium and strontium in the Liquid Low-Level Waste Concentration System. Estimated losses of each material to the Liquid Low-Level Waste Concentration System are on the order of 5,000 to 15,000 Ci/yr. The activities that produce LLLW are not directly related to isotope processing. The LLLW is primarily generated from routine decontamination of the hot cells that are used in cesium and strontium purification. Recent improvements to the building's tank vault reduced groundwater inleakage and, consequently, the LLLW generation rates. The High-Level Radiation Examination Laboratory (Building 3525) primarily serves as an area where irradiated metallurgical specimens can be examined. Currently, the facility is expected to handle a variety of radionuclides, including cesium, uranium, plutonium, and thorium isotopes. The area possesses both hot cells and storage wells for containment of radioactive materials. The average monthly LLLW generation rate of the High-Level Radiation Examination Laboratory has been approximately 6,800 L (1,800 gal) since 1986.

The 4500 Complex (Buildings 4500N, 4500S, 4501, and 4508) is a multipurpose research facility. A large variation in the radioactive materials is handled in the complex, and trace quantities of any radionuclide used at the laboratory could originate at one of the many active hot drains in the facility. Approximately 89 active hot drains exist in the 4500 Complex. The 4500 Complex historically has accounted for 7% to 8% of all LLLW collected at ORNL. Since 1986, the average LLLW generation rate has been approximately 9,800 L/month (2,600 gal/month).

The leakage of rainfall into the Liquid Low-Level Waste Concentration System has been qualitatively recognized for some time as a major contributor to the quantity of waste processed by this system. However, a quantitative estimate of the effects of rainfall on the volume of LLLW collected at ORNL has not been previously evaluated. A time-series analysis identified LLLW collected in the following tanks to be significantly influenced by rainfall: WC-19, W-1-A, WC-11, WC-12, Building 3517 tanks, WC-8, WC-5, W-17, and W-18. It was estimated that approximately 5,700 L (1,500 gal) of LLLW are collected from the above tanks for each inch of rainfall. In addition, several filter pits and sumps throughout ORNL collect rainfall that is sent to the Liquid Low-Level Waste Concentration System.

7.6 UNDERGROUND STORAGE TANK PHYSICAL CHARACTERISTICS

The radioactive USTs at ORNL are a component of the Liquid Low-Level Waste Concentration System. This system is a complex assemblage of tanks, associated transfer pipelines, and ancillary equipment designed to collect, neutralize, concentrate, and store LLLW before its final disposal. The tanks vary in construction design (the majority are constructed of gunite or stainless steel) and in age (the majority are more than 30 yr old). The interconnecting transfer piping is of similar age and design variability. The bulk of the LLLW tanks and transfer lines are buried underground for purposes of radiation shielding. The design operating life of most of the original system was 30 yr, which has been exceeded.

The Liquid Low-Level Waste Concentration System contains both active and inactive tanks and piping. Active tank systems are those systems that are currently receiving liquid waste from active facilities or programs. Inactive tank systems are those systems that are no longer receiving liquid waste and are isolated, either physically or administratively, from active waste-generating facilities. Inactive USTs are organized into groups based on location and function. A complete tank-by-tank listing of these characteristics is found in Table D-10.

7.6.1 Inactive Tanks

The following subsections discuss the six different ORNL inactive UST groups.

7.6.1.1 Group 1 (Gunite Storage Tanks). Table 7-1 describes the operating capacities and installation dates of ORNL group 1 inactive USTs.

Table 7-1. Group 1 Inactive Tanks (Gunite).

Tank ID	Operating capacity		Installation date
	m^3	gal	
W-5	644.00	170,000	1943
W-6	644.00	170,000	1943
W-7	644.00	170,000	1943
W-8	644.00	170,000	1943
W-9	644.00	170,000	1943
W-10	644.00	170,000	1943
W-11	5.68	1,500	1943

- Tanks W-5 through W-10 were constructed in 1943 for permanent storage of LLLW. Because of the expanding needs of the ORNL, the capacity of the tanks proved inadequate. The waste was directed to an evaporator between 1949 and 1954 and from 1959 until the tanks were taken out of service in 1980. Between 1953 and 1959 the waste was sent to open waste pits.

- Tank W-11 was constructed in 1943 to serve as a waste collection monitoring tank for research laboratories in Building 3550. The tank was removed from service in 1948 because of leaks.

Tanks W-5 through W-10 are designated Type D design (Figure 7-8), and Tank W-11 is a Type E design (Figure 7-9). Both tanks types were constructed from gunite. None of these tanks have secondary containment.

Figure 7-8. Oak Ridge Type D Tank.

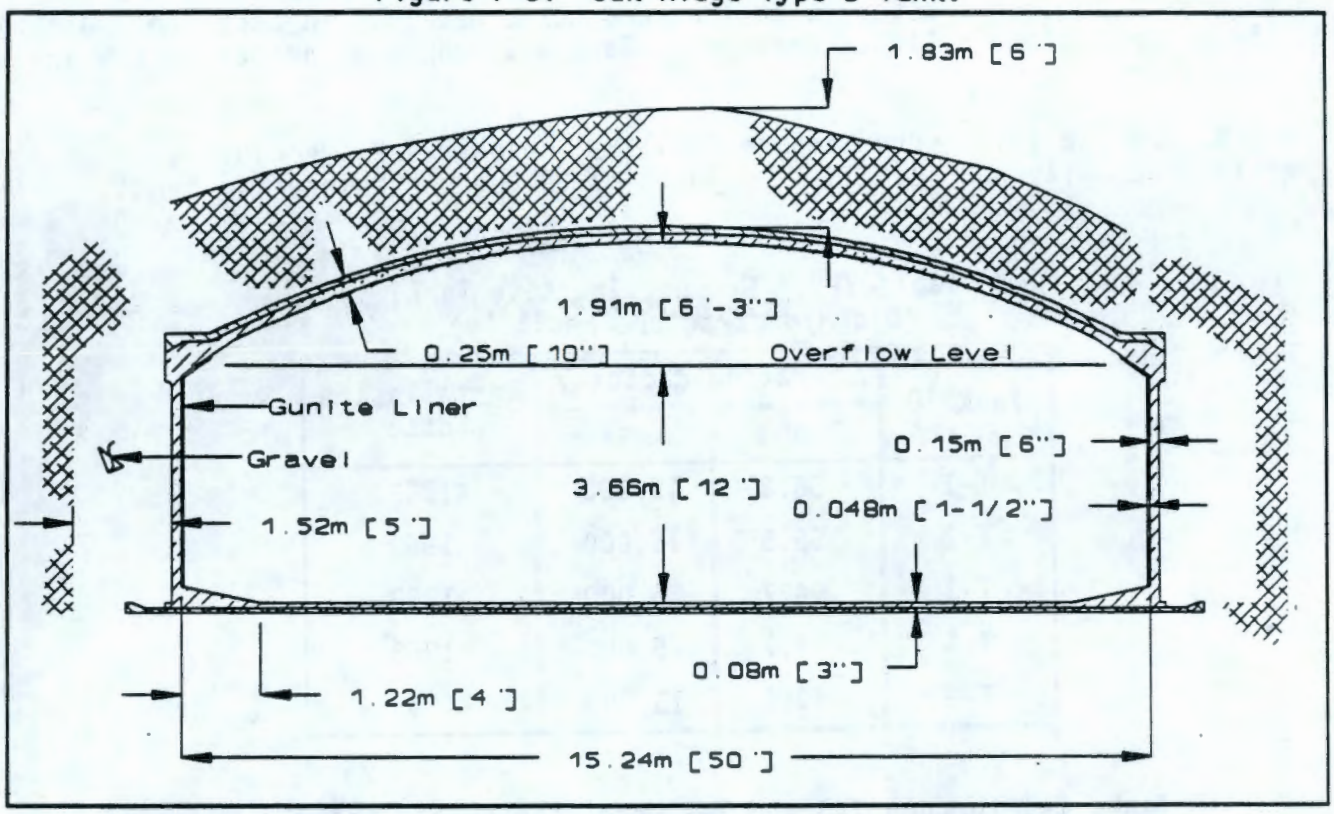

Figure 7-9. Oak Ridge Type E Tank.

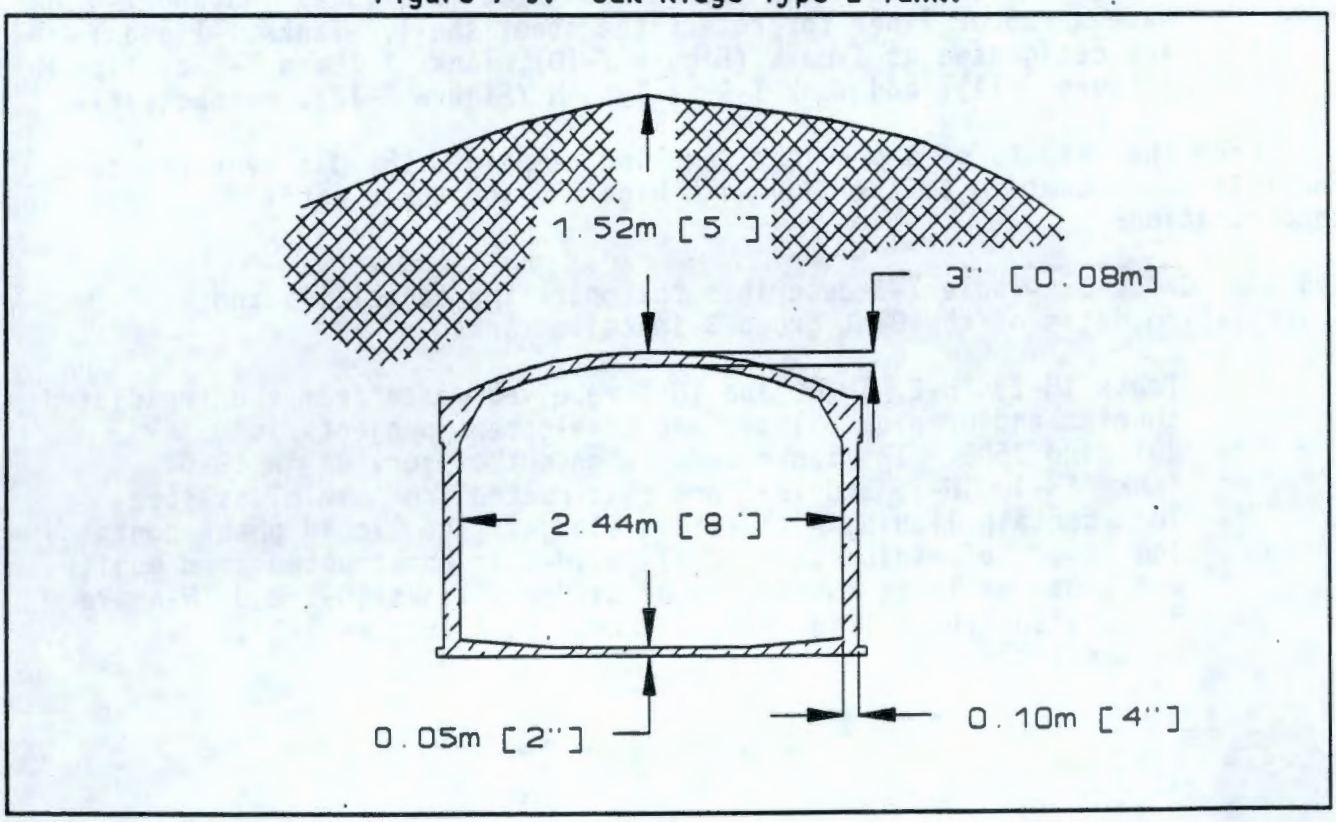

The results of a previous sampling campaign revealed that Tanks W-5 through W-10 contain a sludge with TRUs and toxic metals. In addition, most of these tanks contain listed organics. Tank W-11 contains primarily LLW in aqueous form.

7.6.1.2 Group 2 (Old Hydrofracture Facility). Table 7-2 describes the operating capacity and installation dates of ORNL group 2 inactive tanks.

Table 7-2. Group 2 Inactive Tanks (Old Hydrofracture Facility).

Tank ID	Operating capacity		Installation date
	m^3	gal	
T-1	56.8	15,000	1963
T-2	56.8	15,000	1963
T-3	94.7	25,000	1963
T-4	94.7	25,000	1963
T-9	49.2	13,000	1963

- Tanks T-1 through T-4 and T-9 were used during the Old Hydrofracture Facility operation to store liquid waste until it was ready to be blended with grout, before waste injection by hydrofracture. The Old Hydrofracture Facility operations were discontinued in 1980. The USTs are constructed from carbon steel and Tanks T-3 and T-4 have a rubber liner to protect the steel shell. Tanks T-1 and T-2 are designated as Type L (Figure 7-10), Tanks T-3 and T-4 as Type M (Figure 7-11), and Tank T-9 as Type N (Figure 7-12), respectively.

From the results of a previous sampling campaign, the Old Hydrofracture Facility tanks contain soft sludge with high TRU and toxic metal concentrations.

7.6.1.3 Group 3. Table 7-3 describes the operating capacities and installation dates of the ORNL group 3 inactive tanks.

- Tanks TH-1, TH-2, TH-3, and TH-4 received waste from the irradiated thorium and uranium pilot plant development projects in Building 3503. The tanks were taken out of service in 1970. Tanks TH-1, TH-2, and TH-3 are constructed from stainless steel. They contain liquids with little sludge. The liquid phase contains low levels of radioactivity. Tank TH-4 is constructed from gunite and contains large quantities of sludge. Tanks TH-2 and TH-4 are designated Type K (Figure 7-13) and Type A (Figure 7-14), respectively.

Figure 7-10. Oak Ridge Type L Tank.

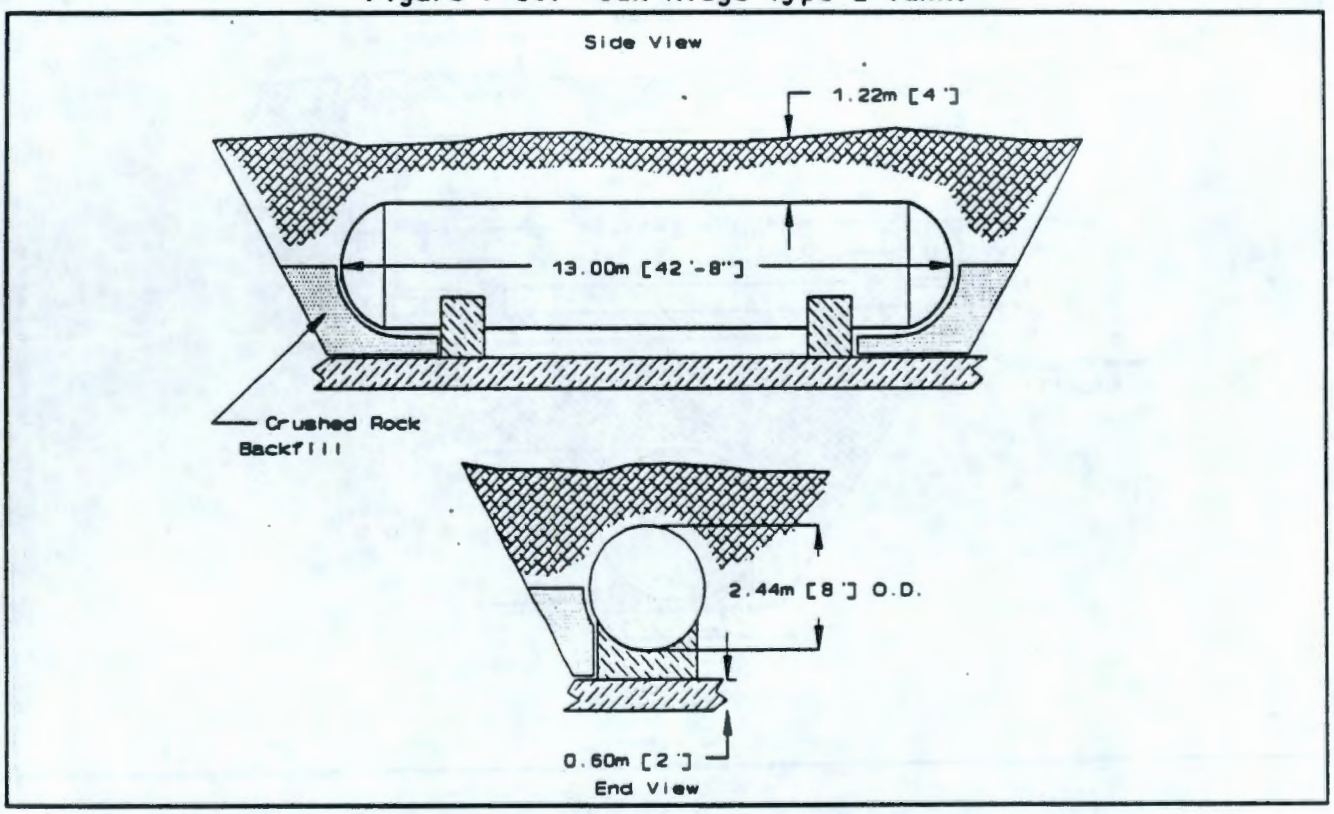

Figure 7-11. Oak Ridge Type M Tank.

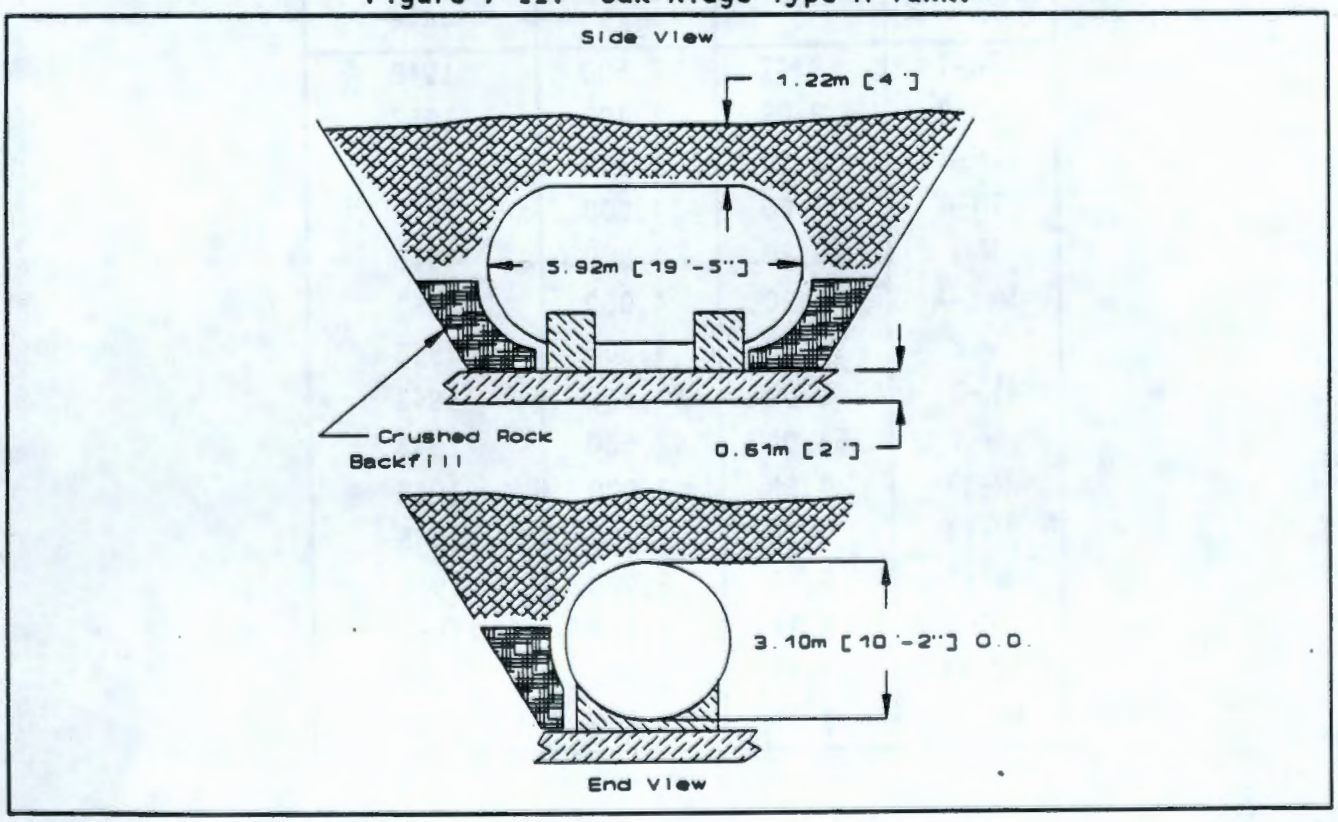

Figure 7-12. Oak Ridge Type N Tank.

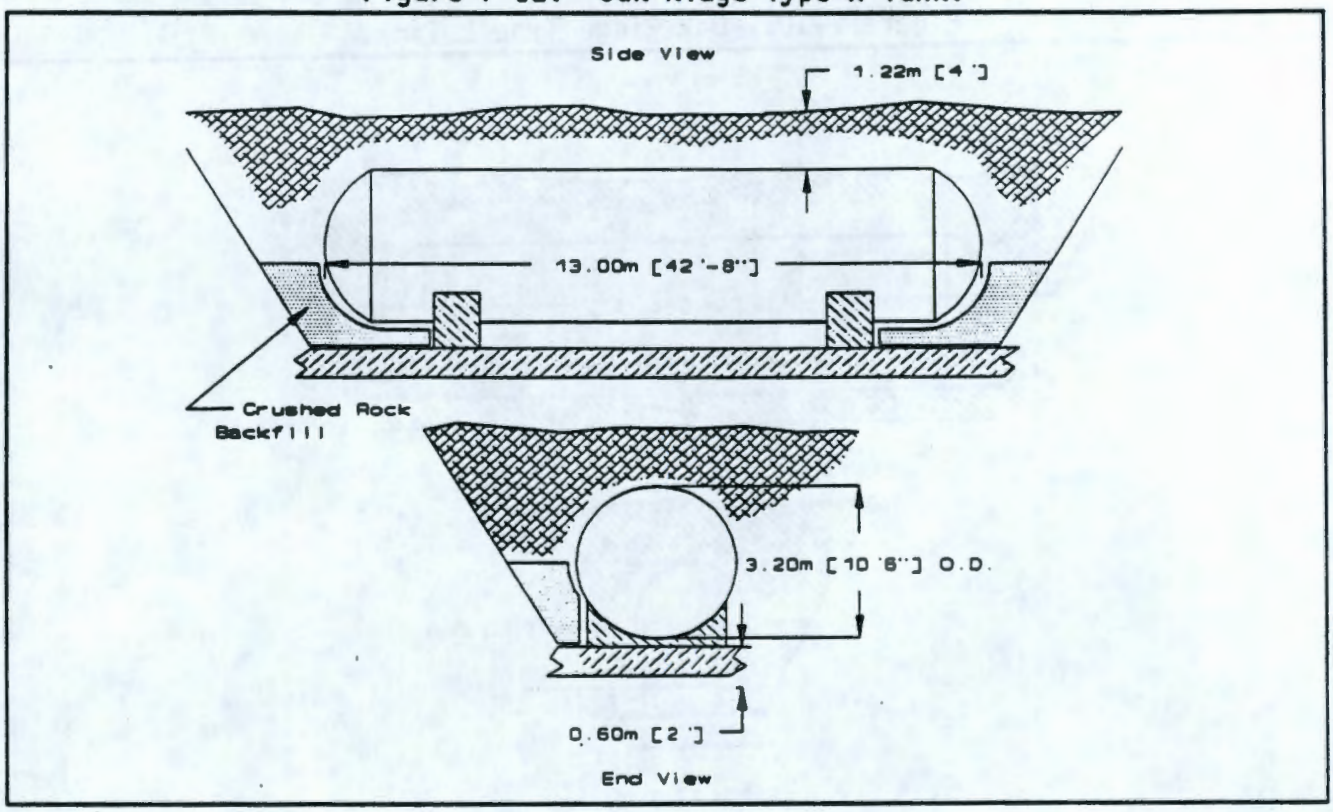

Table 7-3. Group 3 Inactive Tanks.

Tank ID	Operating capacity		Installation date
	m^3	gal	
TH-1	9.47	2,500	1948
TH-2	9.09	2,400	1952
TH-3	12.50	3,300	1952
TH-4	53.00	14,000	1952
W-1	18.20	4,800	1943
W-1-A	15.20	4,000	1951
W-2	18.20	4,800	1943
W-3	161.00	42,500	1943
W-4	161.00	42,500	1943
W-13	7.58	2,000	1945
W-14	7.58	2,000	1945
W-15	7.58	2,000	1945
WC-1	8.14	2,150	1950
WC-15	3.79	1,000	1951
WC-17	3.79	1,000	1951

Figure 7-13. Oak Ridge Type K Tank.

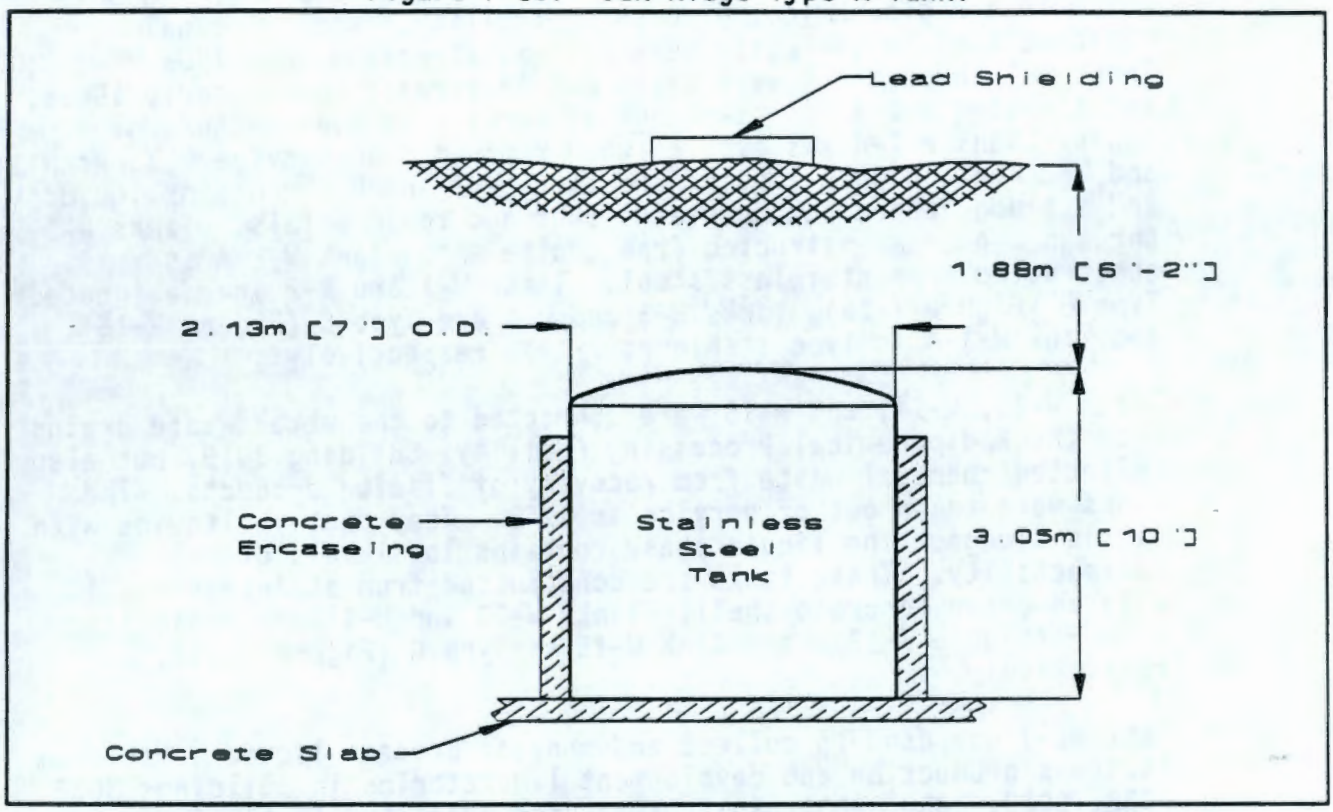

Figure 7-14. Oak Ridge Type A Tank.

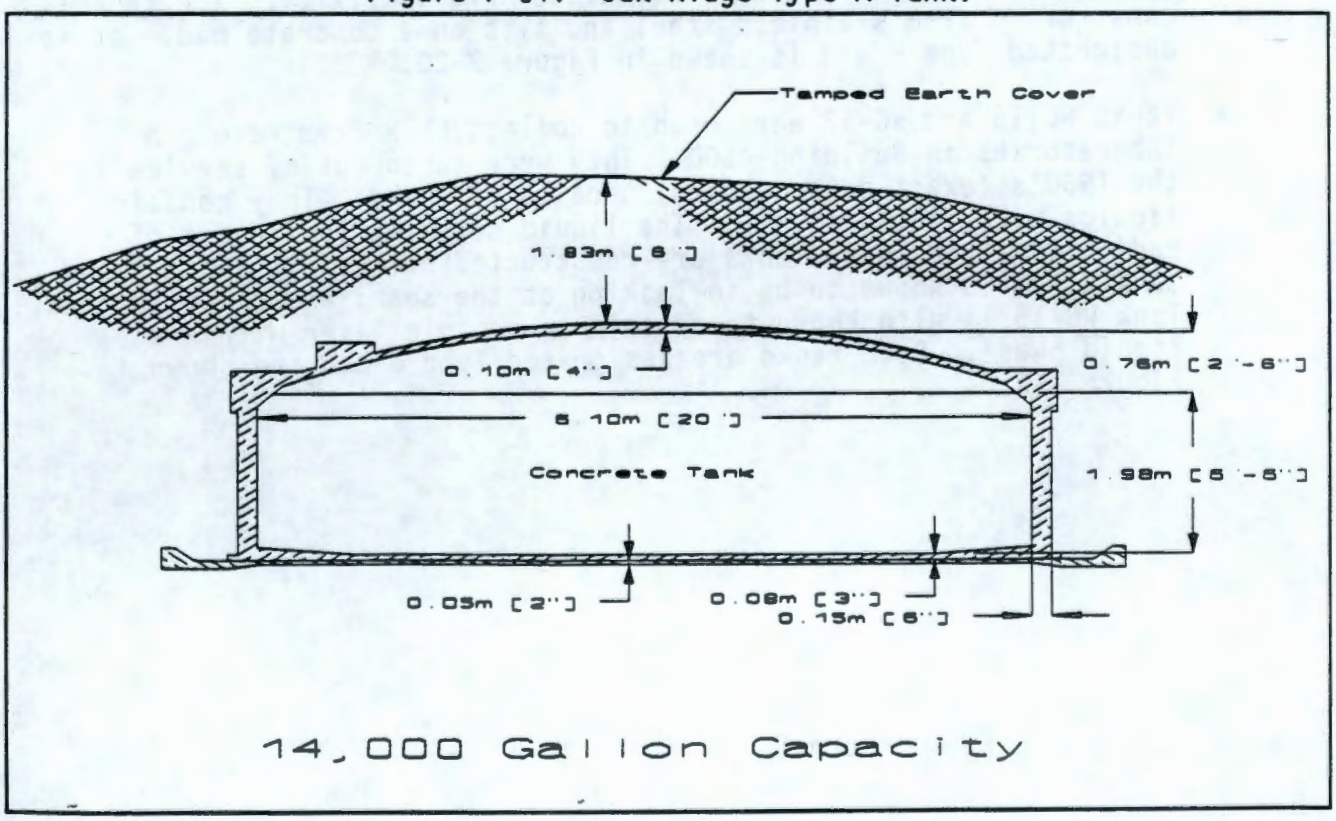

- Tanks W-1 through W-4 and W-1-A received waste from Building 3019, which is a radiochemical processing facility. The principal radionuclides in the waste were cesium, strontium, and TRUs. Tanks W-1 through W-4 were taken out of service in the early 1960s, and the Tank W-1-A was taken out of service in 1986 because of leaks. Tank W-1-A was emptied when removed from service. Tanks W-1 and W-2 contain only liquids and Tanks W-3 and W-4 contain liquids and a sludge phase that contains TRUs and toxic metals. Tanks W-1 through W-4 are constructed from gunite while Tank W-1-A is constructed from stainless steel. Tanks W-1 and W-2 are designated Type B (Figure 7-15), Tanks W-3 and W-4 are Type C (Figure 7-16), and Tank W-1-A is Type I (Figure 7-17), respectively.

- Tanks W-13, W-14, and W-15 were connected to the metal waste drains from the Radiochemical Processing Facility, Building 3019, but also collected chemical waste from recovery of fission products. The tanks were taken out of service in 1958. They contain liquids with little sludge. The liquid phase contains low levels of radioactivity. These tanks are constructed from stainless steel with an outer concrete shell. Tanks W-13 and W-14 are designated Type F (Figure 7-18), and Tank W-15 is Type G (Figure 7-19), respectively.

- Tank WC-1 was used to collect and monitor process liquid waste from isotopes production and development laboratories in Buildings 3038, 3028, 3029, 3030, 3031, 3032, 3033, and 3047; the filter in Building 3110; the stack in Building 3039; and the scrubber in Building 3092. The tank was taken out of service in 1968 because of a leaking discharge line; it contains liquids with little sludge. The liquid phase contains low levels of radioactivity. The tank is constructed from stainless steel and sits on a concrete pad. It is designated Type H and is shown in Figure 7-20.

- Tanks WC-15 and WC-17 were used to collect LLLW from research laboratories in Building 4500. They were taken out of service in the 1960's (exact date unknown) because of leaks. They contain liquids with little sludge. The liquid contains low levels of radioactivity. These tanks are constructed of stainless steel and Tank WC-15 is known to be in-leaking at the seams and the dish head. Tank WC-15 is also known to contain an organic layer within the liquid phase. Both tanks are designated Type J and are shown in Figure 7-21.

Figure 7-15. Oak Ridge Type B Tank.

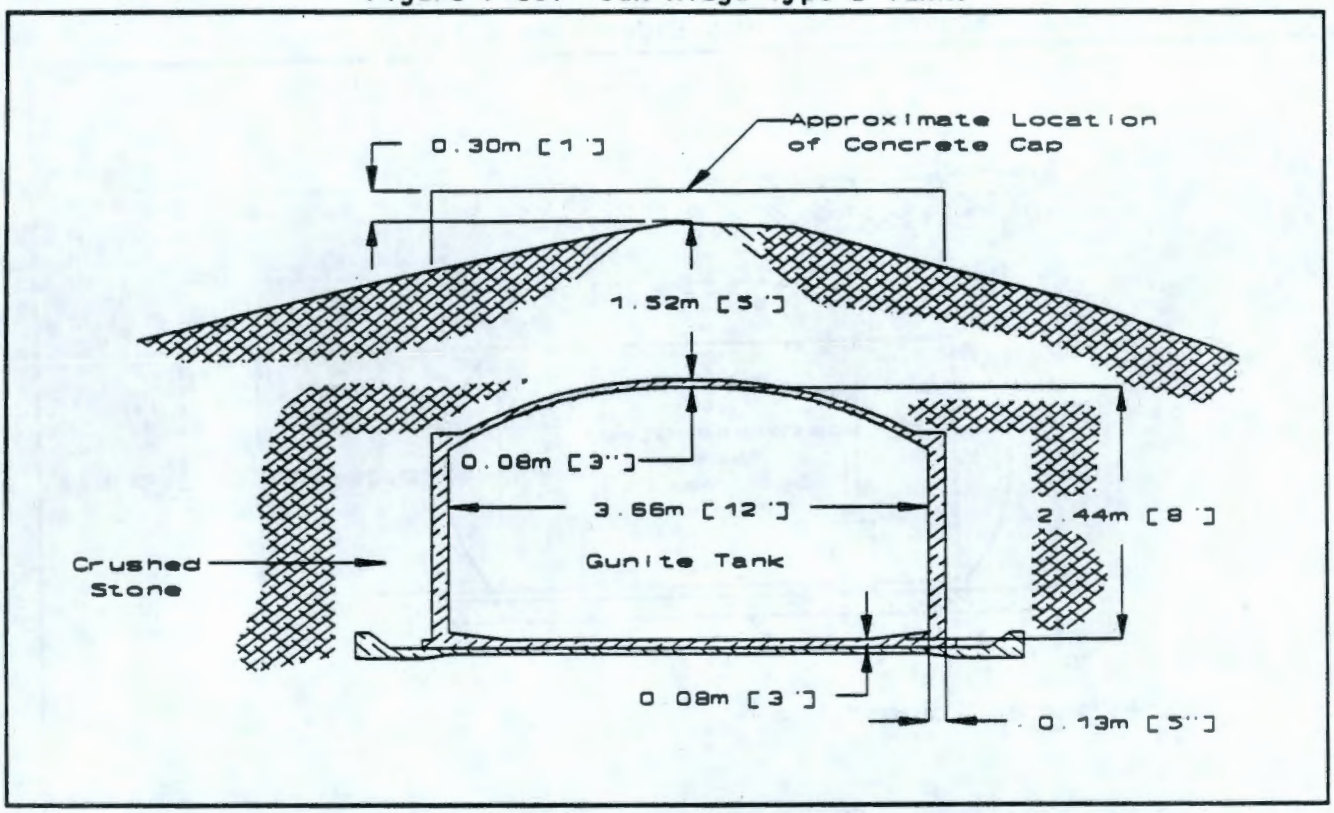

Figure 7-16. Oak Ridge Type C Tank.

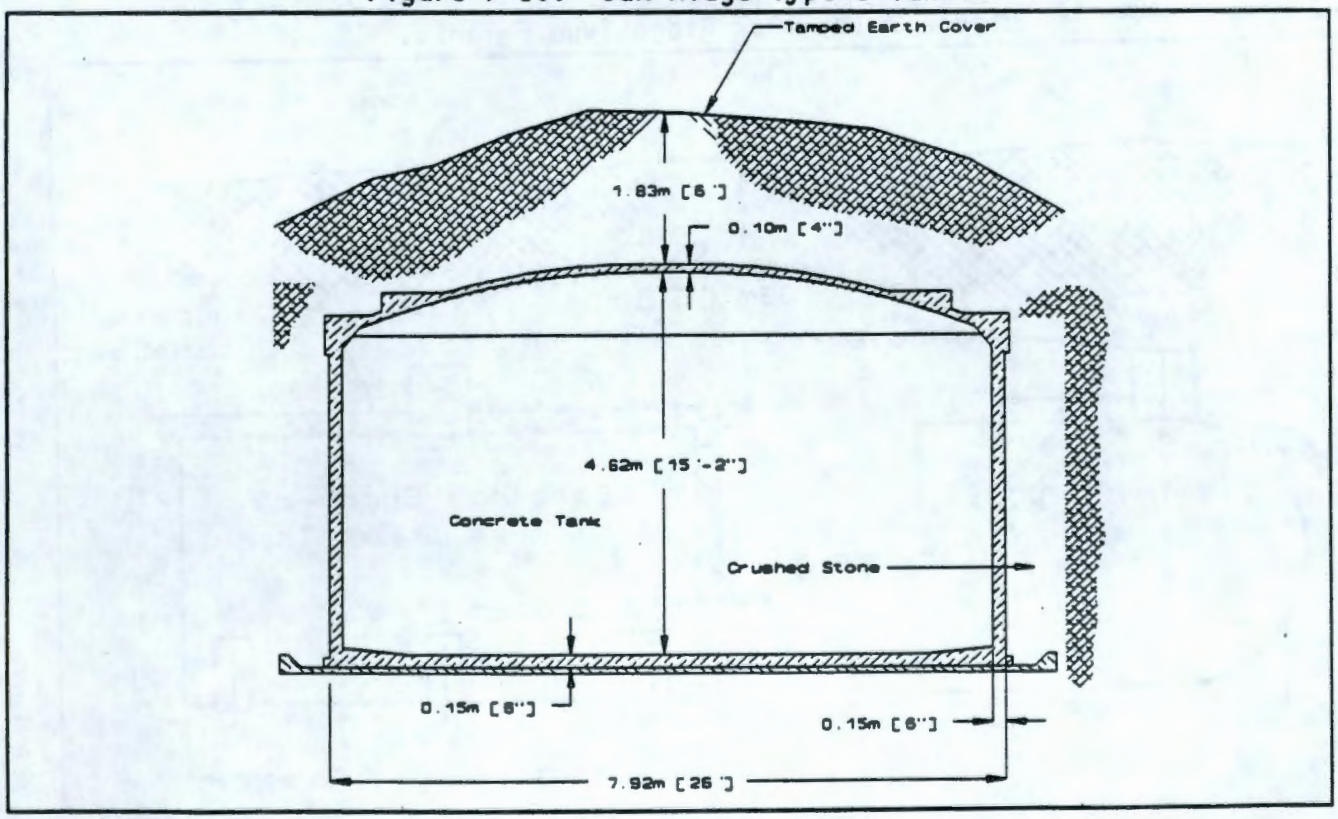

Figure 7-17. Oak Ridge Type G Tank.

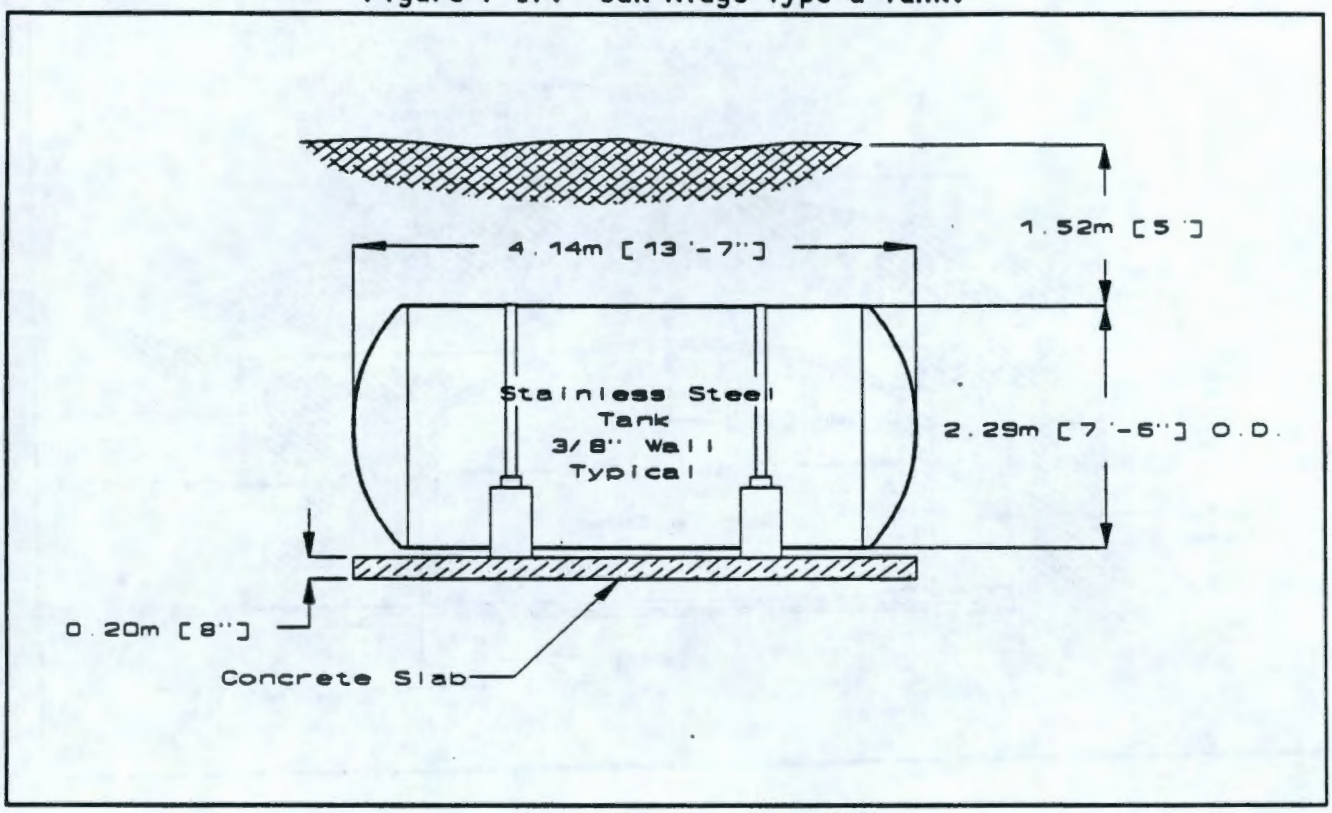

Figure 7-18. Oak Ridge Type F Tanks.

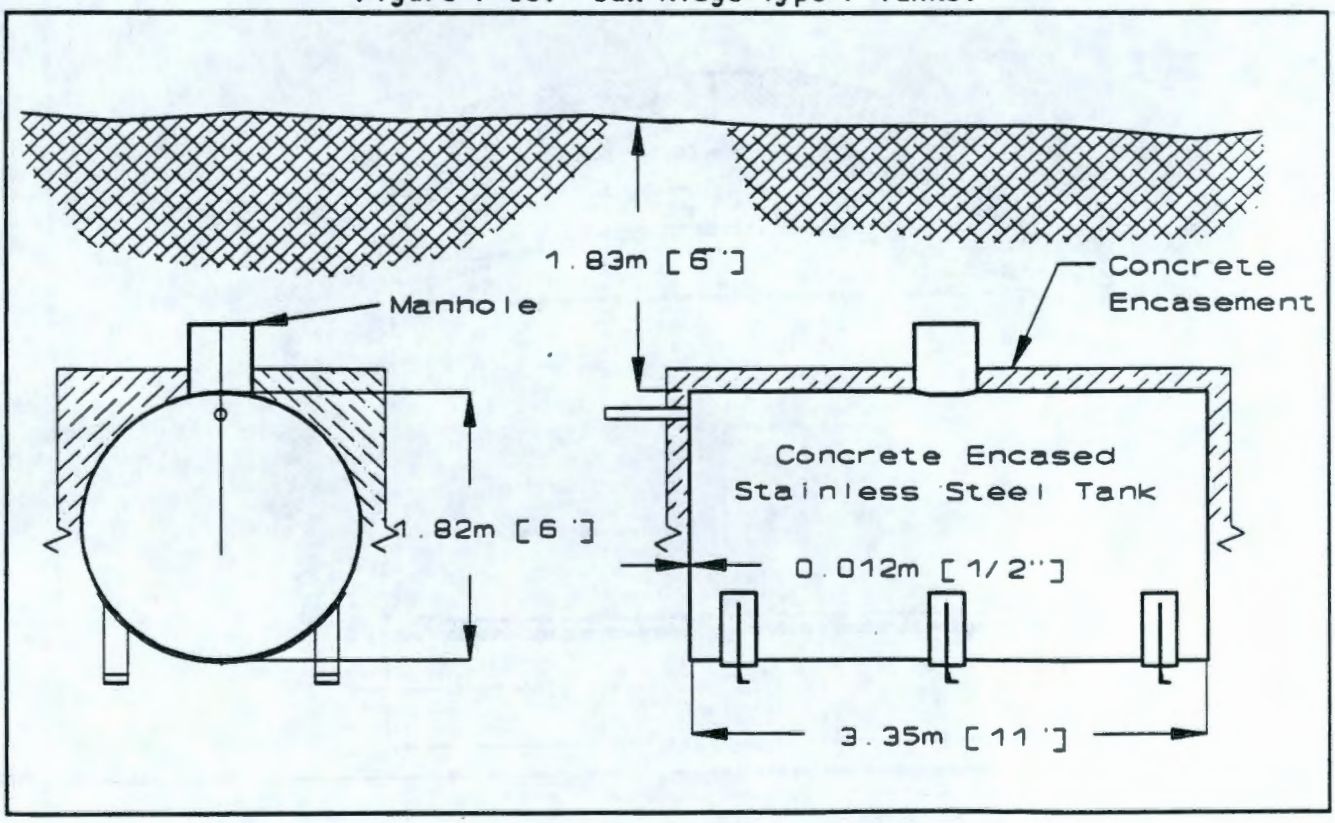

Figure 7-19. Oak Ridge Type I Tank.

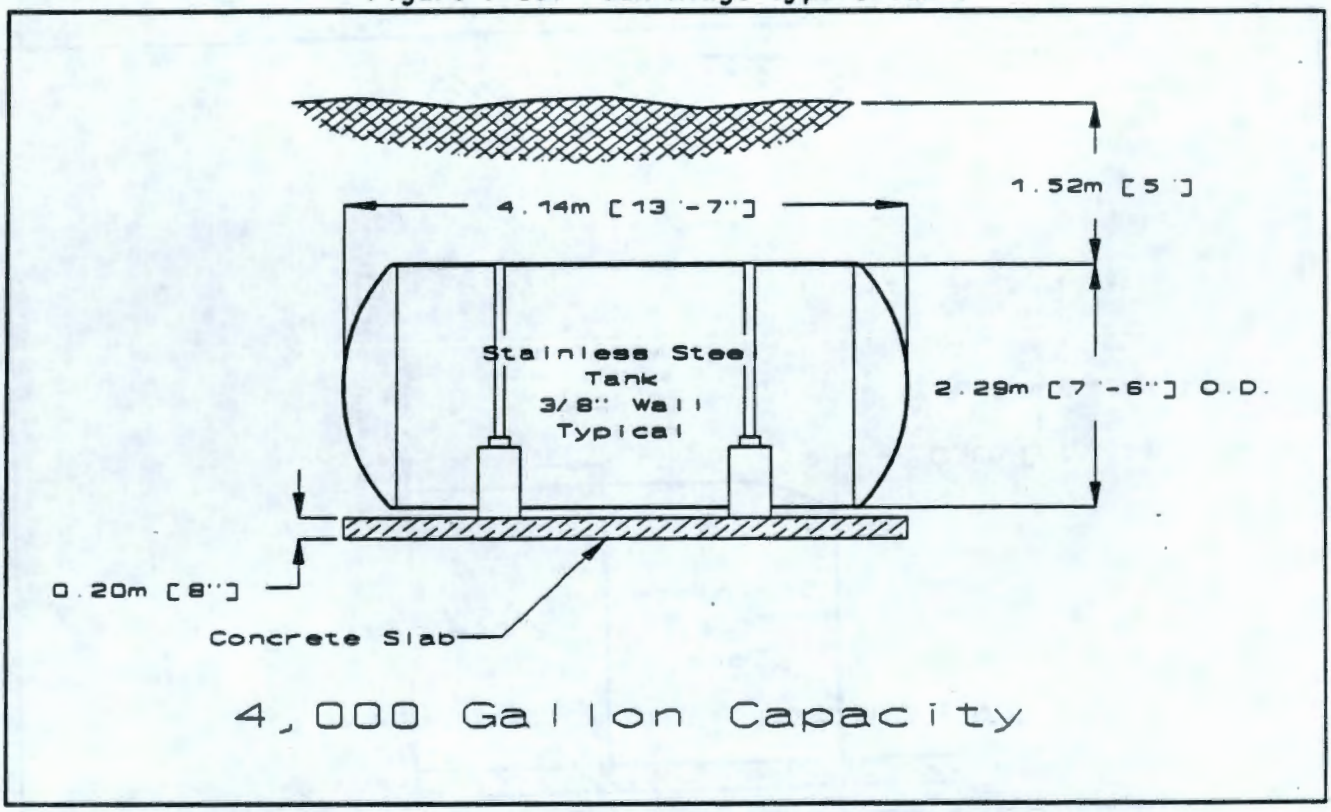

Figure 7-20. Oak Ridge Type H Tank.

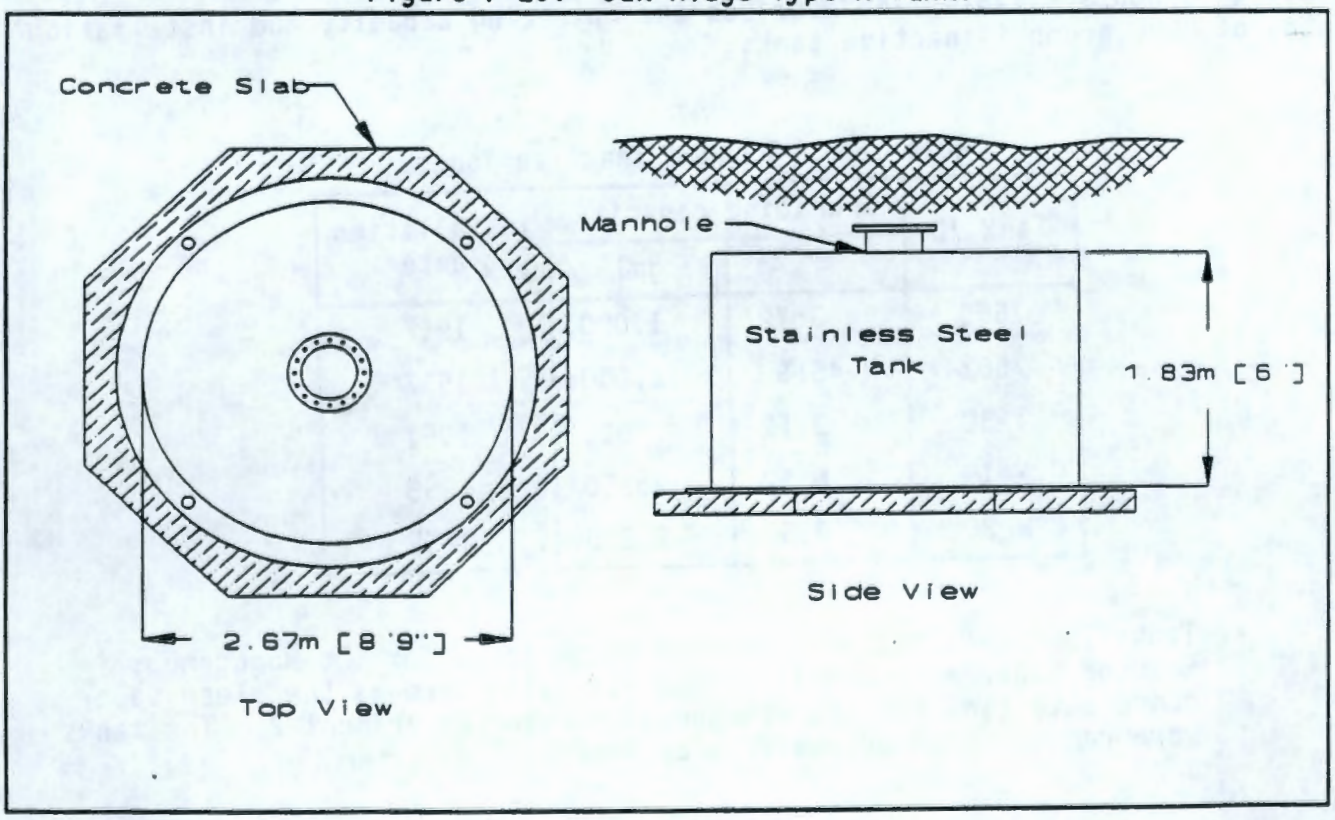

Figure 7-21. Oak Ridge Type J Tank.

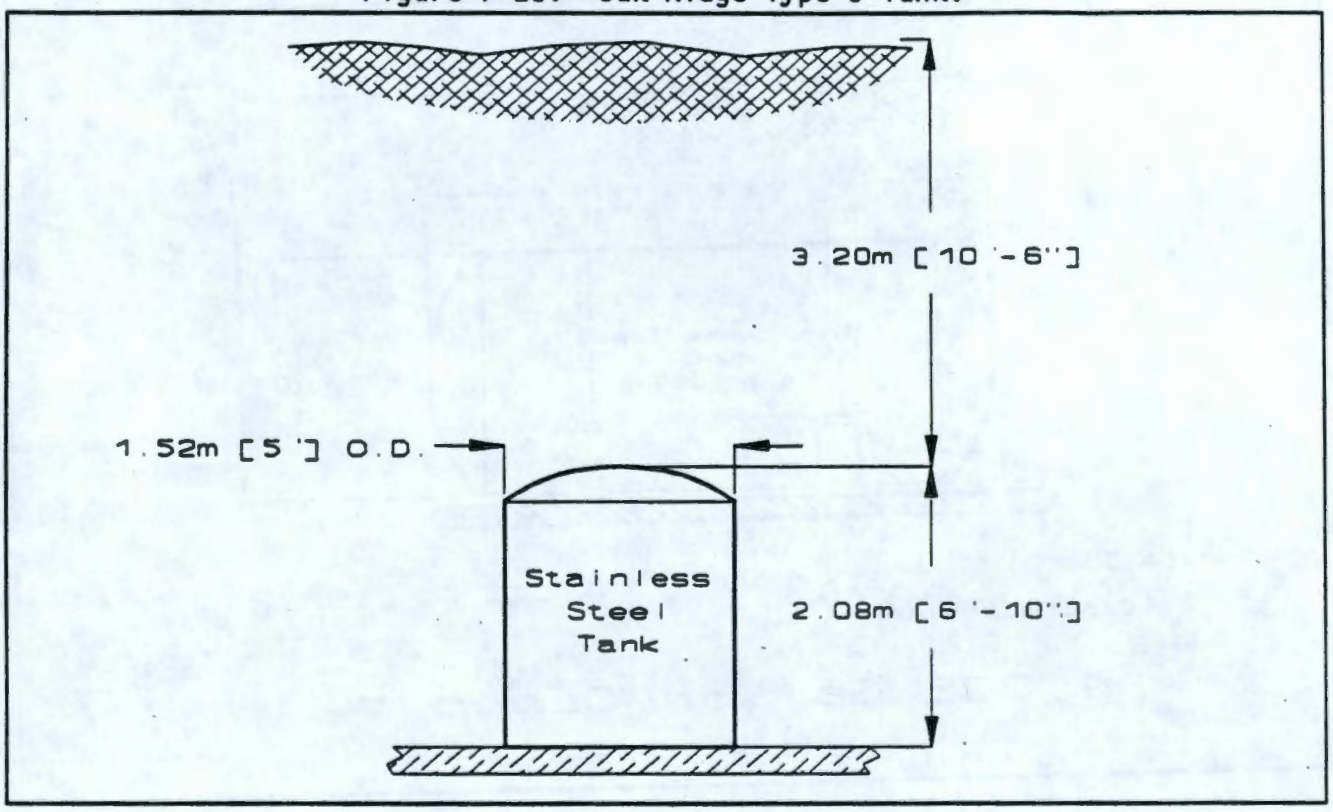

7.6.1.4 **Group 4.** Table 7-4 describes the operating capacity and installation dates of ORNL group 4 inactive tanks.

Table 7-4. Group 4 Inactive Tanks.

Tank ID	Operating capacity		Installation date
	m^3	gal	
7560	3.79	1,000	1957
7562	45.5	12,000	1957
T-30	3.12	825	1961
W-19	8.52	2,250	1955
W-20	8.52	2,250	1955

- Tanks 7560 and 7562 were used as waste tanks for the Homogenous Reactor Experiment and Tank 7560 was later used as the clean vapor condensate tank for the Homogenous Reactor Experiment 2. The tanks were removed from active service in 1961.

- Tank T-30 was used to store radioactive materials for the Curium Recovery Facility, Building 4507, which later became the High Radiation Level Chemical Recovery Facility. The out-of-service date for this tank is unknown.

- Tanks W-19 and W-20 were used to collect waste produced from recovery and reprocessing of uranium and other nuclear material from the Metal Recovery Facility in Building 3505. The tanks were removed from service in 1960.

The results of a previous sampling campaign revealed that the Group 4 tanks contain an aqueous phase with little or no sludge or are empty (tanks in Building 7560 and Tanks W-19 and W-20).

7.6.1.5 Group 5. Table 7-5 describes the operating capacities and installation dates for ORNL Group 5 inactive tanks. Additional information on each tank is provided in the list following Table 7-5.

Table 7-5. Group 5 Inactive Tanks.

Tank ID	Operating capacity		Installation date
	m^3	gal	
3013	1.52	400	1949
3001-B	0.28	75	1943
3001-S	7.58	2,000	Unknown
3003-A	60.60	16,000	1943
3004-B	0.11	30	1956
7503-A	41.70	11,000	1962
H-209	9.47	2,500	1961

- Tank 3013 is connected to the drains in Building 3013. Building 3013 was originally an environmental processing laboratory that dealt with low-level contaminated environmental samples. The out-of-service date is unknown.

- Tank 3001-B is a holdup tank for hot-lab drains in Building 3001. The tank was taken out of service in 1965.

- Tank 3001-S is a tank that is shown on engineering drawings to be located south of Building 3001. This area is currently a parking lot, and the standpipe shown on the drawings is not visible. Investigative work is under way to determine if this tank exists.

- Tank 3003-A received LLLW from three cells and a stack in Building 3003. Building 3003 was the air-handling building for the graphite reactor (Building 3001). Because it was the air handling system, condensate from this equipment is expected to be contaminated with low levels of fission products. The tank was taken out of service in 1965.

- Tank 3004-B was a waste holding tank for the Low Intensity Test Reactor. The out-of-service date is unknown.

- Tank 7503-A was a waste holding tank for the Molten Salt Reactor Experiment. The out-of-service date is unknown.

- Tank H-209 was used for condensate and floor drain holdup from Building 3517. The out-of-service date for this tank is unknown.

These tanks have not been evaluated for waste characteristics.

7.6.1.6 Group 6. Table 7-6 describes the operating capacity and installation dates of ORNL group 6 inactive tanks.

Table 7-6. Group 6 Inactive Tanks.

Tank ID	Operating capacity		Installation date
	m^3	gal	
3002-A	6.06	1,600	1943
T-14	184.00	48,500	1979
S-424	1.89	500	1955
WC-4	6.44	1,700	1944
WC-5	3.79	1,000	1952
WC-6	1.89	500	1952
WC-8	3.79	1,000	1952
W-1-I	1.89	500	1959
W-17	3.79	1,000	1951
W-18	3.79	1,000	1951
WC-11	15.20	4,000	1951
WC-12	3.79	1,000	1951
WC-13	3.79	1,000	1951
WC-14	3.79	1,000	1951

- Tank 3002-A was used to collect liquid condensate from Building 3002. Building 3002 was the filter house for the Old Graphite Reactor. The removal-from-service date is unknown.

- Tank T-14 was used as an overflow emergency waste tank for the New Hydrofracture Facility. The removal-from-service date is unknown.

- Tank S-424 was used to collect highly corrosive chloride-bearing supernate from a precipitation operation.

- Tank WC-4 was used as a waste tank for Building 3026. Waste primarily generated from the Roll Up Process, which involved dissolving uranium targets and extracting isotopes. The tank was taken out of service in the 1950's.

- Tanks WC-5, WC-6, and WC-8 received waste from development projects in Buildings 3508, 3541, and 3592.

- Tank W-12 received waste from examination of reactor components in Building 3525. It received the waste Tank F-501. The removal-from-service date is unknown.

- Tanks W-17 and W-18 served as waste tanks for isotope production in Building 3026.

- Tank W-1-I was used to collect waste liquids from isotope recovery operation in Building 3028. The exact removal-from-service date is unknown.

- Tanks WC-11, WC-12, WC-13, and WC-14 were used as waste tanks for the 4500 Complex.

These tanks have not been evaluated for their waste characteristics. No analysis of contents is available.

7.6.2 Active Tanks

The following subsections discuss the 6 groups of active USTs at ORNL.

7.6.2.1 Fission Products Development Laboratory Tanks. Table 7-7 lists the operating capacity and installation dates for the ORNL active tanks used for the fission products development laboratory.

These tanks were used to collect production process wastes from a variety of operations, such as supernate from cesium and strontium precipitation operations, raffinate from a ^{144}Ce extraction process, and general decontamination solutions which contained ^{60}Co, ^{90}Sr, ^{192}Ir, ^{147}Pm, ^{137}Cs, and ^{134}Cs.

Table 7-7. Fission Products Development Active Tanks.

Tank ID	Operating capacity		Installation date
	m^3	gal	
S-223	9.47	2,500	1955
S-324	3.79	1,000	1955
S-523	3.79	1,000	1955

These tanks will be used for decontamination of facilities used in isotopes production programs that were discontinued in fiscal year 1990. Building 3517 will then be used for isotopes storage. The Liquid Low-Level Waste Concentration System will be used to transfer waste generated by isotopes storage and transfer operations and possibly for future waste management treatment programs.

7.6.2.2 Evaporator Complex and Melton Valley Storage Tanks. Table 7-8 discuses the operating capacities and installation dates for the ORNL active tanks associated with the evaporation complex.

Table 7-8. LLLW Evaporator Active Tanks.

Tank ID	Operating capacity		Installation date
	m^3	gal	
C-1	189	50,000	1964
C-2	189	50,000	1964
W-21	189	50,000	1979
to			
W-23	189	50,000	1979
W-24	189	50,000	1980
to			
W-31	189	50,000	1980

Tanks C-1, C-2, and W-21 through W-23 are used as feed or concentrate storage tanks for the LLLW evaporator located in Building 2531. Tanks W-24 through W-31 are concentrated waste storage tanks located in the Melton Valley Complex. These tanks are constructed of stainless steel and are located in concrete vaults. With the exception of two tanks (C-1 and C-2), the tank vaults have stainless steel liners. Consequently, there are two types of designations, 01 for Tanks C-1 and C-2, and 02 for Tanks W-21 through W-31. They are shown in Figure 7-22.

Figure 7-22. Oak Ridge Type 01 and 02 Tank.

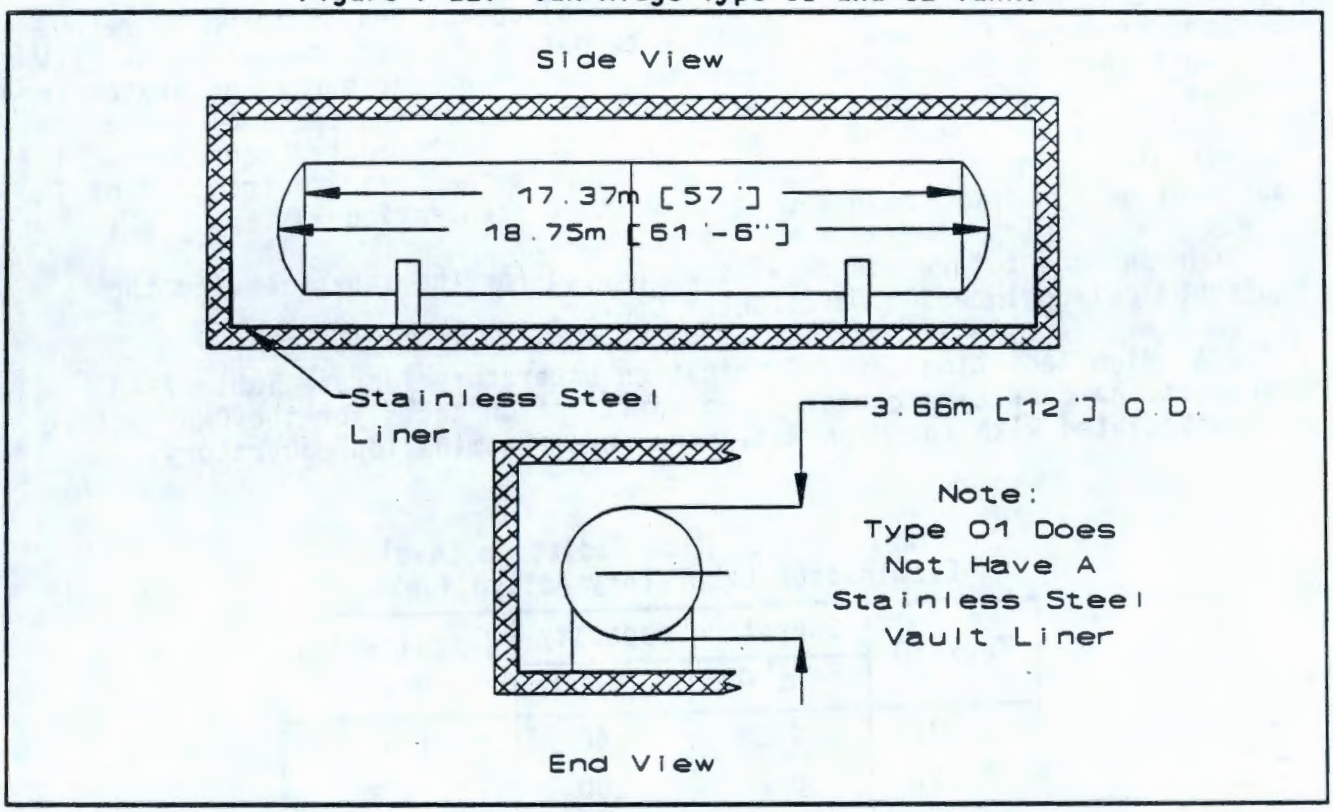

Current and future use remains unchanged for the tanks in the evaporator complex.

7.6.2.3 Radiochemical Engineering Development Center Tanks. Table 7-9 discuses the operating capacities and installation dates for the ORNL active tanks associated with the Radiochemical Engineering Development Center.

Table 7-9. Radiochemical Engineering Development Center Active Tanks.

Tank ID	Operating Capacity		Installation Date
	(m^3)	(gal)	
B-2-T	7.08	1,870	1965
B-3-T	7.08	1,870	1965
C-6-T	2.65	700	1965
F-111	0.47	125	1962
F-126	4.54	1,200	1962
WC-20	37.90	10,000	1976

The LLLW was produced from radiochemical operations designed to recover isotopes produced from irradiated HFIR targets and other sources. The LLLW at the Radiochemical Engineering Development Center was primarily generated from disposal of spent off-gas scrubber solutions. Other sources included routine and nonroutine wash down of hot cells and other contaminated equipment. The Radiochemical Engineering Development Center is the major contributor of TRU radionuclides in the Liquid Low-Level Waste Concentration System.

Current and future use remains unchanged for the tanks serving the Radiochemical Engineering Development Center.

7.6.2.4 High Radiation Level Examination Laboratory Tanks. Table 7-10 discusses the operating capacity and installation dates for the ORNL active USTs associated with the High Radiation Level Examination Laboratory.

Table 7-10. High Radiation Level Examination Laboratory Active Tanks.

Tank ID	Operating capacity		Installation date
	m^3	gal	
F-201	0.15	40	1962
F-501	0.76	200	1962
W-12	2.65	700	1947

Building 3525 provides for the post-irradiation mechanical disassembly of reactor components so that physical and metallurgical examinations can be conducted. The LLLW is produced from the decontamination and cleanup of the hot cells used in the disassembly and examination process.

Current and future use remains unchanged for the tanks serving Building 3525.

7.6.2.5 High Flux Isotopes Reactor. Table 7-11 describes the operating capacities and installation dates for the ORNL active tanks associated with the HFIR.

Table 7-11. HFIR Active Tanks.

Tank ID	Operating capacity		Installation date
	m^3	gal	
HFIR	49.2	13,000	1961
T-1-A	56.8	15,000	1963
T-2-A	56.8	15,000	1963

The Liquid Low-Level Waste Concentration System services a major research reactor facility. The LLLW from the HFIR primarily results from regeneration and backwashing of primary and pool demineralizer systems, sampling operations, gaseous waste filter pit inleakage and condensation, and stack drainage. Other waste is generated by routine maintenance and decontamination of contaminated equipment. When in operation, the HFIR is the primary source of ^{60}Co in the Liquid Low-Level Waste Concentration System.

Current and future use remains unchanged for the tanks serving the HFIR.

7.6.2.6 Miscellaneous. Table 7-12 lists the operating capacities and installation dates for miscellaneous ORNL active tanks included within this document.

Table 7-12. Miscellaneous Facility Active Tanks.

Tank ID	Operating capacity		Installation date
	m^3	gal	
2026-A	1.89	500	1962
T-13	15.20	4,000	1979
W-16	3.79	1,000	1951
WC-2	3.79	1,000	1951
WC-3	3.79	1,000	1951
WC-7	4.17	1,100	1951
WC-9	8.14	2,150	1952
WC-10	7.58	2,000	1951
WC-19	8.52	2,250	1955

- The 2026 Facility (Tank 2026-A) provided analytical sample analysis for various programs at the ORNL. The LLLW was generated upon disposal of various samples once analysis was completed and from routine washdown and decontamination of hot cells and other contaminated equipment. The waste from the Hot Off-Gas Pot Scrubber treatment facility is transferred via a pipe that intersects the Tank WC-2 discharge line.

  The 2026 Facility continues to generate LLLW from analysis of samples at the ORNL. The primary activities conducted within the facility include analysis of LLLW waste tank contents, reactor fuel analysis, and work for others. The facility is key to environmental characterization of materials considered by the Federal Facility Agreement and other environmental compliance programs. The Hot Off-Gas Pot Scrubber waste will continue to be collected.

- Tank T-13 served as a waste tank for the New Hydrofracture Facility. The New Hydrofracture Facility was used to solidify concentrated LLLW for disposal but is no longer operating.

  Potential future uses include pilot plant operations to develop new LLLW treatment processes and decontamination activities.

- Tank W-16 serves Building 3026D (Segmenting Hot Cell Facility) in the Isotopes Complex. Multigram quantities of radioisotopes were separated, purified, stored, and distributed in facilities serviced by the Liquid Low-Level Waste Concentration System. A wide range of radionuclides was produced. Isotopes were produced for use in research, medical, and industrial applications. Most waste was generated as a result of routine and nonroutine hot-cell and equipment decontamination. Waste includes residual solutions used for isotope separation, trace quantities of isotopes, and other contaminated liquids.

  Tank W-16 may potentially be used for the decontamination of Building 3026D.

- Tanks WC-2 and WC-10 service the Isotopes Circle facilities. Multigram quantities of radioisotopes were separated, purified, stored, and distributed in facilities serviced by the Liquid Low-Level Waste Concentration System. A wide range of radionuclides were produced. Isotopes were produced for use in research, medical, and industrial applications. Most waste was generated as a result of hot-cell and equipment decontamination. Waste includes residual solutions used for isotope separation, isotopes, and other contaminated liquids.

  Significant isotopes production in the facilities serviced by the Liquid Low-Level Waste Concentration System was terminated in fiscal year 1990. However, the Liquid Low-Level Waste Concentration System continues to collect waste from routine cleanup and washdown of hot cells and other components. The Liquid Low-Level Waste Concentration System will be used during formal cleanup and shutdown stabilization of the facility through fiscal year 1994. Research and medical production activities will continue in a limited portion of these facilities for the foreseeable future.

- Tank WC-3 was used primarily to collect residuals from metallurgical sampling and analysis from the 3025 Facility (Irradiated Materials Examination and Testing Facility). The waste solutions came from etching, dissolution, and decontamination of particulate residue from physical property analysis (such as tensile and shear testing) of irradiated metals.

  Current and future use will remain unchanged for Tank WC-3.

- Waste solutions from health physics research of contaminated animals (Geosciences Laboratory) were stored in Tank WC-7. Original tank waste included fission products and other contaminated waste generated during animal contamination studies. The LLLW from the Evaporator Complex Building 2533 sump (Cell Ventilation Filter Pit) is transferred to the central Liquid Low-Level Waste Concentration System via the Tank WC-7 discharge line.

  Current waste in Building 3504 is generated from disposal of contaminated soil samples and from decontamination of equipment used in collecting soil samples. The tank discharge line will continue to receive condensate from the Evaporator Complex Building 2533 sump.

- Tank WC-9 received LLLW from Building 3503. Building 3503 originally was a high-level radiation engineering laboratory. The LLLW was generated by pilot plant studies. The tank also receives waste from the Hot Off-Gas Pot, which collects condensate from the off-gas pot and cell ventilation gaseous waste collection systems.

  Currently, WC-9 receives condensate from the Hot Off-Gas Pot.

- Tank W-19 received LLLW produced from the regeneration of reactor pool and canal demineralizers at Buildings 3019, 3001, 3042, 3004, and 3010. Tank WC-19 also received condensate from off-gas HEPA filter pits associated with these reactors (Oak Ridge Research Reactor/Bulk Shielding Reactor).

  Although the reactors are not currently being operated, LLLW is produced from the regeneration of demineralizers at Buildings 3042 and 3019. Since the Federal Facility Agreement has been signed, Tank WC-19 has continued to be used to process ion-exchange regenerant from the shutdown reactors. One reactor will be restarted in the near future.

7.7 UNDERGROUND STORAGE TANK WASTE PHYSICAL DESCRIPTION

This section describes the physical characteristics of the tank waste as determined by sampling campaigns for selected active and inactive USTs. Only 43 of the 91 ORNL USTs examined in this report have known waste volumes. For a full listing of the tank waste volumes and masses, see Table D-10. Figure 7-23 shows the relative percentage of waste volumes compared to operating capacity.

7.7.1 Inactive Underground Storage Tanks

As of February 1992, 33 inactive tanks have been sampled; these tanks are listed in Table 7-13. Of the tanks sampled to date, 30 were found to contain residual liquid and 17 to contain sludge. The presence of sludge is dependent on pH and cation and anion content. No sludge was observed in tanks with a pH less than 5 (6 tanks), but all tanks with a pH greater than 9 (12 tanks) contained a sludge. Low dissolved solids were observed in most of the tanks with a pH between 5 and 9. Only one tank (7860-A) had a significant organic layer.

Figure 7-23. Percent of Operating Capacity Filled with Waste.

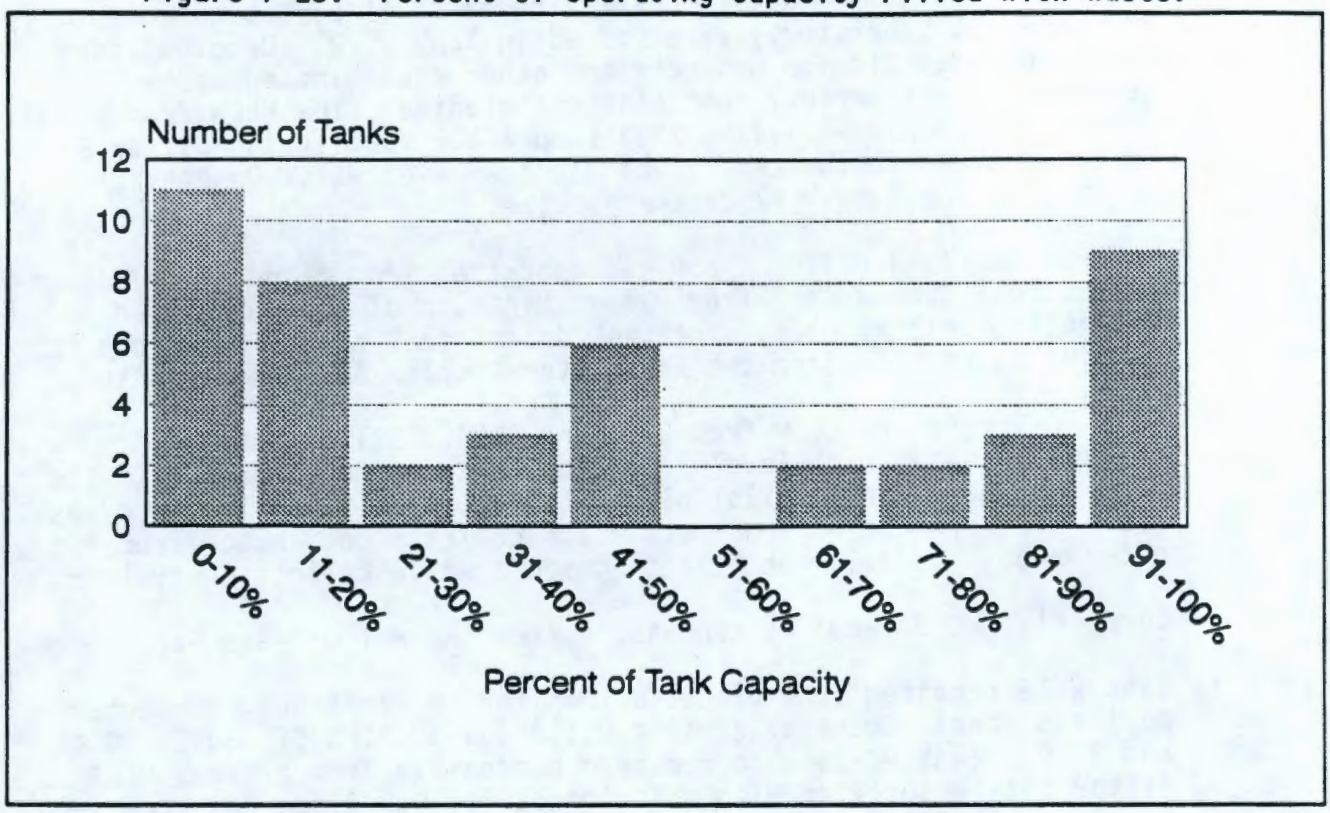

7.7.2 Active Underground Storage Tanks

Waste investigations of the active USTs have included collection of liquid and sludge samples from six of the Melton Valley storage tanks (Tanks W-24 through W-28 and W-31) and from two of the storage tanks at the evaporator service facility in Bethel Valley (Tanks W-21 and W-23). The supernatant liquids in Tanks W-29 and W-30 were also sampled and analyzed. The two remaining active storage tanks (Tanks C-1 and C-2) were not sampled because the tank design did not include sample access ports. Data for the Melton Valley storage tanks is current as of December 1990, and the evaporator service tank data is current as of January 1990. Table 7-14 presents the inventory of radioactive liquid wastes and sludges in the active storage tanks sampled to date.

Generally, all of the liquid samples appeared to be single phase and ranged from pale to deep yellow with little if any turbidity. The sludges were not homogeneous and varied in consistency and color. The consistency of the soft sludges that had been sonicated ranged from "similar to mustard" to "like peanut butter with gritty particles." A "hard" sludge sample collected from Tank W-27 had the consistency of a hard mud and the appearance of concrete pieces mixed with mud or clay and was too stiff to sonicate. The hard sludge from Tank W-31 had the appearance of mud or clay with a little grit (Sears er al. 1990).

Table 7-13. ORNL Inactive Tank Waste Volumes.

Tank	Total		Liquid		Sludge	
	m^3	gal	m^3	gal	m^3	gal
7860-A	10.50	2,774	10.50	2,774	0	0
7560	0.00	0	0.00	0	0	0
7562	1.43	378	1.43	378	Trace	Trace
T-1	44.79	11,838	41.80	11,047	2.99	791
T-2	46.40	12,253	41.80	11,048	4.56	1,205
T-3	15.49	4,092	7.81	2,063	7.68	2,029
T-4	40.40	10,669	35.40	9,341	5.03	1,328
T-9	6.70	1,771	4.88	1,290	1.82	481
T-30	0.15	40	0.15	40	0.00	0
TH-1	1.05	278	1.05	278	0.00	0
TH-3	0.55	145	0.55	145	0.00	0
TH-4	50.30	13,297	26.40	6,982	23.90	6,315
W-1-A	0.09	25	0.09	25	0.00	0
W-1	4.59	1,213	4.59	1,213	0.00	0
W-2	2.45	647	2.45	647	0.00	0
W-3	129.62	34,123	121.00	31,847	8.62	2,276
W-4	79.70	21,044	64.60	17,062	15.10	3,982
W-5	58.30	15,409	38.90	10,278	19.40	5,131
W-6	311.00	82,175	292.00	77,044	19.40	5,131
W-7	46.10	12,175	26.70	7,044	19.40	5,131
W-8	117.00	30,817	107.00	28,244	9.74	2,573
W-9	58.90	15,563	49.20	12,990	9.74	2,573
W-10	291.00	77,043	267.00	70,618	24.30	6,425
W-11	3.63	959	3.40	897	0.23	62
W-13	1.73	457	1.73	457	0.00	0
W-14	0.98	259	0.98	259	0.00	0
W-15	2.51	664	2.51	664	0.00	0
W-19	0.00	0	0.00	0	0.00	0
W-20	0.00	0	0.00	0	0.00	0
WC-17	1.40	370	1.40	370	Trace	Trace
Totals	1,327.23	349,765	1,155.32	304,332	171.91	45,433

Table 7-14. ORNL Active Tank Waste Volumes.

Tank	Total		Liquid		Sludge	
	m^3	gal	m^3	gal	m^3	gal
C-1	26.3	6,939	0.0	0	26.3	6,939
C-2	171.2	45,220	0.0	0	171.2	45,220
W-21	83.7	22,100	60.6	16,000	23.1	6,100
W-22	75.7	20,000	75.7	20,000	0.0	0
W-23	78.4	20,700	16.7	4,400	61.7	16,300
W-24	179.5	47,400	129.5	34,200	50.0	13,200
W-25	179.5	47,400	90.9	24,000	88.6	23,400
W-26	171.1	45,200	113.9	30,100	57.2	15,100
W-27	177.5	46,900	110.5	29,200	67.0	17,700
W-28	179.4	47,400	165.0	43,600	14.4	3,800
W-29	178.7	47,200	178.7	47,200	0.0	0
W-30	178.7	47,200	178.7	47,200	0.0	0
W-31	174.1	46,000	149.9	39,600	24.2	6,400
Total	1,853.8	489,659	1,270.1	335,500	583.7	154,159

NOTE: Inventory in Melton Valley Storage Tanks as of December 1990; inventory in Tanks W-21 and W-23 as of January 1990; inventory in Tanks C-1, C-2, W-22, W-29, and W-30) as of November 1, 1989.

7.8 WASTE CHARACTERIZATION CAPABILITIES

This section identifies those laboratory facilities currently capable of analyzing and characterizing tank waste samples.

7.8.1 Existing

Presently, the laboratory facilities at Oak Ridge with capabilities of analyzing the tank waste samples include the High Radiation Level Analytical Laboratory (Building 2026), the Transuranium Laboratory (Building 7920), and the Chemical and Physical Analysis Laboratory (Building 4500S).

7.8.2 Planned

In March 1990, an Analytical Laboratory Needs Assessment Team was formed. The team's objective is to ascertain the restructuring efforts and management considerations necessary to meet the total projected laboratory workload in order to observe all regulations and their associated timetables. The team's basic approach is to determine the present analytical laboratory capacity and capability and compare them with the projections of future analytical needs as evaluated by the laboratory users. The difference between the current

laboratory capability and the future analytical needs is the key to this assessment. This difference is currently being quantified (McMahon et al. 1991).

As a part of this quantification, the current status of each of the analytical laboratories was determined through a study-team questionnaire sent to each plant laboratory. Plans for future laboratory capabilities will be based partly upon this information.

7.9 UNDERGROUND STORAGE TANK WASTE CHEMICAL CHARACTERISTICS

This section describes the general chemical compositions of the tank waste as determined from sampling campaigns for selected active and inactive USTs. Results of those sampling campaigns for both inactive and active tanks are listed in Tables D-1 to D-9. Chemical totals for individual tanks are listed in Table D-11.

7.9.1 Inactive Underground Storage Tanks

The inactive tank chemical contents measurements included metals (uranium, silver, arsenic, barium, cadmium, chromium, mercury, nickel, lead, selenium, and thallium); and anions (chloride, fluoride, nitrate, phosphate, sulfate, cyanide, hydroxide, hydrogen ion, carbonate, and bicarbonate).

For the most part, the distribution of the *Resource Conservation and Recovery Act of 1976* (RCRA) metals within liquid and sludge phases in the inactive waste tank was dependent first upon the pH and second upon the anion content of the liquid phase. The high levels of chromium, mercury, and lead observed in many of the inactive waste tanks is not surprising because of the various laboratory activities that were associated with the waste-tank system. For many years a common cleaner for glassware was a mixture of sulfuric acid and potassium dichromate, which was routinely flushed down the hot cell drains. Another common practice was the cleaning and decontamination of lead bricks and other forms of lead shielding. The use of mercury in electrochemical techniques and for other processes or activities would account for the levels of mercury observed. Although cadmium was present in most of the sludge samples, it was usually in amounts below the regulatory limits. Little or no cadmium was observed in most of the liquid phases analyzed, but the cadmium observed in the liquid phase of one tank (Tank W-1-A) was above the regulatory limit.

For basic waste tanks (pH > 9), much higher levels of RCRA metals were found in the sludge phase. Excluding the acidic tanks, the only EPA hazardous metals observed at significant levels in the liquid phases were chromium and mercury. Some of the acidic tanks also had elevated levels of lead and nickel in the liquid phase.

Dissolved solids observed in the inactive tank samples ranged from 0.1 to 159 mg/mL, and suspended solids ranged from <0.1 to 11.3 mg/mL. Low dissolved solids were observed in most of the tanks with a pH between 5 and 9.

Density measurements ranged from 0.9982 to 1.1303 g/cm^3 (8.315 to 9.415 lb/gal) for the aqueous samples. For the only tank with a significant organic layer (Tank 7860-A), the density of the organic samples ranged from 0.9088 to 0.9135 g/cm^3 (7.57 to 7.61 lb/gal).

The higher measurements for suspended solids, dissolved solids, and density were observed in Tank W-7. These high measurements probably result from the high level of uranium present in the liquid phase of Tank W-7.

7.9.2 Active Underground Storage Tanks

The active tank samples were analyzed for major chemical constituents, total organic carbon, metals listed as hazardous under the RCRA and general waste characteristics. Because of limited access into the tanks and the relatively high radiation levels of the waste, only one location in each tank was sampled. Full characterization of the wastes under RCRA is planned to be conducted when the wastes are processed for disposal and more representative samples can be collected.

The liquid wastes in the storage tanks, except Tank W-21, are essentially high pH (typically 11 to 13), sodium/potassium nitrate salt solutions. The nitrate concentration varies from 3 to 5*M*, with the average being about 4*M*. The waste solutions also contain about 0.08*M* chloride; five tank solutions contain dissolved carbonate. The concentrations of heavy metals (e.g., uranium, thorium, RCRA metals), as well as the iron and aluminum, are generally in the low parts per million range.

Tank W-21 was found to be acidic when it was sampled during the study. This aqueous waste contained significantly higher levels of calcium, magnesium, and heavy metals than did waste in the other active tanks and was not in equilibrium with the interstitial liquid (pH of 7) in the sludge phase.

The solid wastes (sludges) contain precipitated metals such as sodium, potassium, calcium, magnesium, uranium, and thorium. The sludges also contain low levels of aluminum and iron.

The study included some preliminary screening tests for RCRA hazardous characteristics. The full RCRA characterization was not performed because of budget limitations. The liquid phases in eight tanks were corrosive and/or contained a toxic metal at a concentration high enough to classify the waste as RCRA hazardous. The classifications of the sludge samples are preliminary, based on the total metal contents obtained with a HNO_3 leach, and are not the extraction procedure toxicity or the toxicity characteristic leaching procedure results. All sludge samples exceeded the extraction procedure toxicity equivalent limits for mercury and lead and are potentially RCRA hazardous. That is, the metals content would result in the classification of the sample as RCRA hazardous if the sludge dissolved completely in the acetate buffer used in the regulatory test. Several sludge samples were also potentially RCRA hazardous with respect to chromium and cadmium.

Selected samples from the waste tanks were analyzed for the EPA Target Compound List volatile and semivolatile organic compounds (Sears et al. 1990). Very few target compound list compounds were found in the waste samples.

7.9.3 Waste Chemical Characterization Totals

Using the information presented in Tables D-1 through D-9, an estimate of the total mass of the different chemical species for each tank with known waste volumes was calculated. The totals for each chemical species and for all the active and inactive tanks examined are listed in Table 7-15.

7.10 UNDERGROUND STORAGE TANK WASTE RADIOLOGICAL CHARACTERISTICS

This section describes the general radiological characteristics of the tank waste samples. Table D-12 gives a tank-by-tank listing of individual isotope totals.

7.10.1 Inactive Underground Storage Tanks

The inactive tank sample analyses included measurements of the following radionuclides: ^{137}Cs, ^{60}Co, ^{90}Sr, ^{3}H, ^{233}U, ^{238}U, ^{252}Cf, ^{238}Pu, ^{239}Pu, ^{244}Ce, ^{241}Am, ^{134}Cs, ^{228}Th, ^{232}Th, ^{232}U, ^{152}Eu, ^{155}Eu, and ^{14}C.

In general, most of the alpha activity was found in the sludge of basic waste tanks, with little to no alpha activity observed in the basic liquid phase. Low levels of alpha activity were observed in the acidic waste tanks, and one acidic tank (Tank W-13) approached the limits for classification as TRU waste. The only TRU waste identified was found in the waste tanks with sludge. Eleven of the 17 tanks with sludge are classified as TRU waste.

Of the beta-gamma emitters, the most abundant radionuclides observed were ^{137}Cs and ^{90}Sr with their associated short-lived daughters, ^{137}Ba and ^{90}Y, respectively. Most of the beta activity observed in the liquid phase of the inactive waste tanks resulted from ^{137}Cs, which was 1 to 2 magnitudes greater than the water-soluble ^{90}Sr. The liquid-phase gamma activity was also caused by the ^{137}Cs, which was usually several orders of magnitude greater than other water-soluble gamma emitters. With the exception of several of the more acidic liquid wastes, the gamma active europium isotopes were not observed in the liquid phase of the inactive tanks. When present, the europium isotopes were observed only in the sludge of basic tanks.

7.10.2 Active Underground Storage Tanks

The liquid samples had dose rates (field survey) on contact with the full 250-mL (8.4-oz) sample jars of 0.1 to 0.5 R/h, except for the samples from Tank W-26, which measured 1.2 R/h. Dose rates (field survey) for the wet sludge samples ranged from 1 to 2.8 R/h for a 250-mL (8.4-oz) sample. Dose rates of up to 50 R/h/g were observed for dried sludge samples.

All of the composite sludge samples except the soft sludge in Tank W-31, were identified as TRU wastes. If the Tank W-31 sludge were dried, then the solid residue would also be classified as TRU waste.

Table 7-15. Estimated ORNL Tank Chemical Mass Totals.

Component	Mass		Percent
	kg	lb	
CO_3^{-2}	8,170	18,010	0.2
Cl^-	8,970	19,770	0.2
F^-	2,920	6,440	0.1
OH^-	1,480	3,260	0.0
NO_3^-	337,200	743,400	9.0
PO_4^{-3}	9,160	20,200	0.2
SO_4^{-2}	13,930	30,700	0.4
Al	1,800	3,960	0.0
Ba	97	213	0.0
Ca	24,690	54,430	0.7
Cr	211	466	0.0
Fe	748	1,650	0.0
Pb	267	588	0.0
Mg	5,050	11,130	0.1
Ni	51	113	0.0
K	27,100	59,750	0.7
Se	28	62	0.0
Si	40	88	0.0
Ag	10	22	0.0
Na	144,700	318,900	3.9
Organics	4,870	10,730	0.1
Others	655,900	1,446,000	17.5
H_2O	2,503,000	5,519,000	66.7
Totals	3,750,392	8,268,882	99.8

In general, little or no alpha activity was observed in the basic liquid phases in the tanks. The liquid samples were all non-TRU solutions; their salt residues, if dried, would also be non-TRU.

The most abundant beta-gamma emitters observed were ^{137}Cs and ^{90}Sr and their short-lived daughters, ^{137}Ba and ^{90}Y, respectively. Gamma-active europium isotopes were observed in the sludges but were not detected in the liquid phase of any tanks that were basic.

7.10.3 Waste Radiological Characterization Totals

Using the information presented in Tables D-1 through D-6 and D-9, estimates of the total curies and masses of the different radioactive isotopes contained within each of the tanks with known waste volumes were calculated. The totals for each isotope for all the active and inactive tanks examined are listed in Table 7-16.

Table 7-16. Estimated ORNL Tank Radionuclide Content.

Radionuclide	Activity (Ci)	Mass	
		kg	lb
^{239}Pu	103	5.00	11
^{238}Pu	279	0.00	0
^{238}U	6	17,480.00	38,530
^{235}U	176	81,420.00	179,500
^{233}U	73	7.70	17
^{144}Ce	214	0.00	0
^{137}Cs	26,290	0.50	1
^{90}Sr	49,620	0.50	1
Total	76,761	98,913.70	218,060

7.11 FACILITIES FOR PROCESSING RETRIEVED TANK WASTE

This section discusses the existing and planned facilities for processing stored waste.

7.11.1 Existing

The Liquid Low-Level Waste Concentration System currently uses two liquid waste evaporators for volume reduction of the generated waste to minimize the required storage capacities for interim storage of the waste.

7.11.2 Planned

A Waste Handling and Packaging Plant is currently being planned and designed. It is anticipated that this facility will be operational by fiscal year 2000. This plant will receive waste prior to ultimate disposal. The LLLW Solidification Project is also being planned to increase the available storage capacity for the LLLW. The project will include campaigns to remove the supernate from the tanks and immobilize it in a cement matrix.

7.12 SOIL AND GROUNDWATER CONTAMINATION

This section explains the general geological conditions surrounding the Oak Ridge site and also identifies those tanks that are known or suspected leakers or currently experiencing inleakage of surface or groundwater.

7.12.1 Leak Detection

A number of tanks have been identified as either leakers or tanks that receive inleakage of surface water or groundwater. These tanks are listed in Table 7-17. They are all inactive and are no longer receiving additional waste.

Table 7-17. ORNL Tanks Identified as Leakers.

Tank	Status	Tank	Status
W-1	Leaker	WC-1	Leaker
W-1-A	Inleakage	WC-6	Leaker
W-2	Leaker	WC-8	Leaker
W-3	Inleakage	WC-11	Leaker
W-4	Inleakage	WC-12	Leaker
W-5	Inleakage	WC-13	Leaker
W-6	Inleakage	WC-13	Leaker
W-7	Inleakage	WC-14	Leaker
W-8	Inleakage	WC-15	Leaker
W-9	Inleakage	WC-17	Leaker
W-10	Inleakage	W-17	Leaker
W-11	Leaker	W-18	Leaker

7.13 REFERENCES

Autrey, J. W., D. A. Costanzo, W. H. Griest, L. L. Kaiser, J. M. Keller, C. E. Nix, and B. A. Tomkins, 1990, *Sampling and Analysis of the Inactive Waste Storage Tank Contents at ORNL*, ORNL/ER-13, Martin Marietta Energy Systems, Inc., Oak Ridge, Tennessee.

Autrey, J. W., W. H. Griest, J. Keller, J. M. Botts, R. L. Schenley, and, M. A. Sipe, 1992, *Sampling and Analysis of the Inactive Waste Tanks TH-2, WC-1, and WC-15*, ORNL/ER-19, Martin Marietta Energy Systems, Inc., Oak Ridge, Tennessee.

Ceo, R. N., M. B. Sears, and J. T. Shor, 1990, *Physical Characterization of Radioactive Sludges in Selected Melton Valley and Evaporator Facility Storage Tanks*, ORNL/TM-11653, Martin Marietta Energy Systems, Inc., Oak Ridge, Tennessee.

DOE, 1992, *Federal Facility Agreement for the Oak Ridge Reservation*, DOE/OR-1014, Oak Ridge, Tennessee.

Martin Marietta, 1990, *Federal Facility Agreement Implementation Plan: ORNL Low-Level Radioactive Waste Tank Systems*, ETM-11539, Martin Marietta Energy Systems, Inc., Oak Ridge, Tennessee.

Martin Marietta, 1991, *Environmental, Safety, and Health Plan for the Remedial Investigation of the Liquid Low-Level Waste Tanks at Oak Ridge National Laboratory, Oak Ridge, Tennessee*, ORNL/ER/Sub/87-99053/32, Martin Marietta Energy Systems, Inc., Oak Ridge, Tennessee.

Martin Marietta, 1992, *Federal Facility Agreement Plans and Schedules for Liquid Low-Level Radioactive Waste Tank Systems at Oak Ridge National Laboratory, Oak Ridge, Tennessee*, ES/ER-17&D1, Martin Marietta Energy Systems, Inc., Oak Ridge, Tennessee.

McMahon, L. W., N. F. Christopher, J. G. Dorsey, W. L. Harper, S. K. Holshouser, R. W. Morrow, R. L. Rubinstein, W. D. Shults II, and J. R. Stokely, 1991, *Progress Report for the Environmental Restoration, Waste Management, and Environmental Compliance Analytical Needs Assessment Study Team*, ES/ER/TM-6, Martin Marietta Energy Systems, Inc., Oak Ridge, Tennessee.

Peretz, F. J., B. R. Clark, C. B. Scott, and J. B. Berry, 1986, *Characterization of Low-Level Liquid Wastes at the Oak Ridge National Laboratory*, ORNL/TM-10218, Martin Marietta Energy Systems, Inc., Oak Ridge, Tennessee.

Robinson, S. M., S. M. Depaoli, and A. B. Walker, 1991, *Federal Facility Agreement Contingency, Upgrade, and Replacement Plans for the ORNL Active Low-Level Radioactive Waste Tank System*, ORNL/TM-11795, Martin Marietta Energy Systems, Inc., Oak Ridge, Tennessee.

Sears, M. B., J. L. Botts, R. N. Ceo, J. J. Ferrada, W. H. Griest, J. M. Keller, and R. L. Schenley, 1990, *Sampling and Analysis of Radioactive Liquid Wastes and Sludges in the Melton Valley and Evaporator Facility Storage Tanks at ORNL*, ORNL/TM-11652, Martin Marietta Energy Systems, Inc., Oak Ridge, Tennessee.

Weeren, H. O., G. D. Brunton, W. deLaguna, and J. G. Moore, 1974, *Hydrofracture Site Proof Study at Oak Ridge National Laboratory*, ORNL/TM-4713, Union Carbide Corporation, Oak Ridge, Tennessee.

This page intentionally left blank.

8.0 SAVANNAH RIVER SITE, SOUTH CAROLINA

This section provides a detailed description of the HLW storage tanks at the SRS in Aiken, South Carolina. A general site description of the facilities, environmental conditions, fuel processing activities, and waste storage methods is provided. The information is based on referenced documents and interviews with SRS personnel.

8.1 SAVANNAH RIVER SITE INTRODUCTION AND HISTORY

The SRS was established in 1950 by the U.S. Atomic Energy Commission. Figure 8-1 shows the location of the SRS.

Figure 8-1. SRS Location.

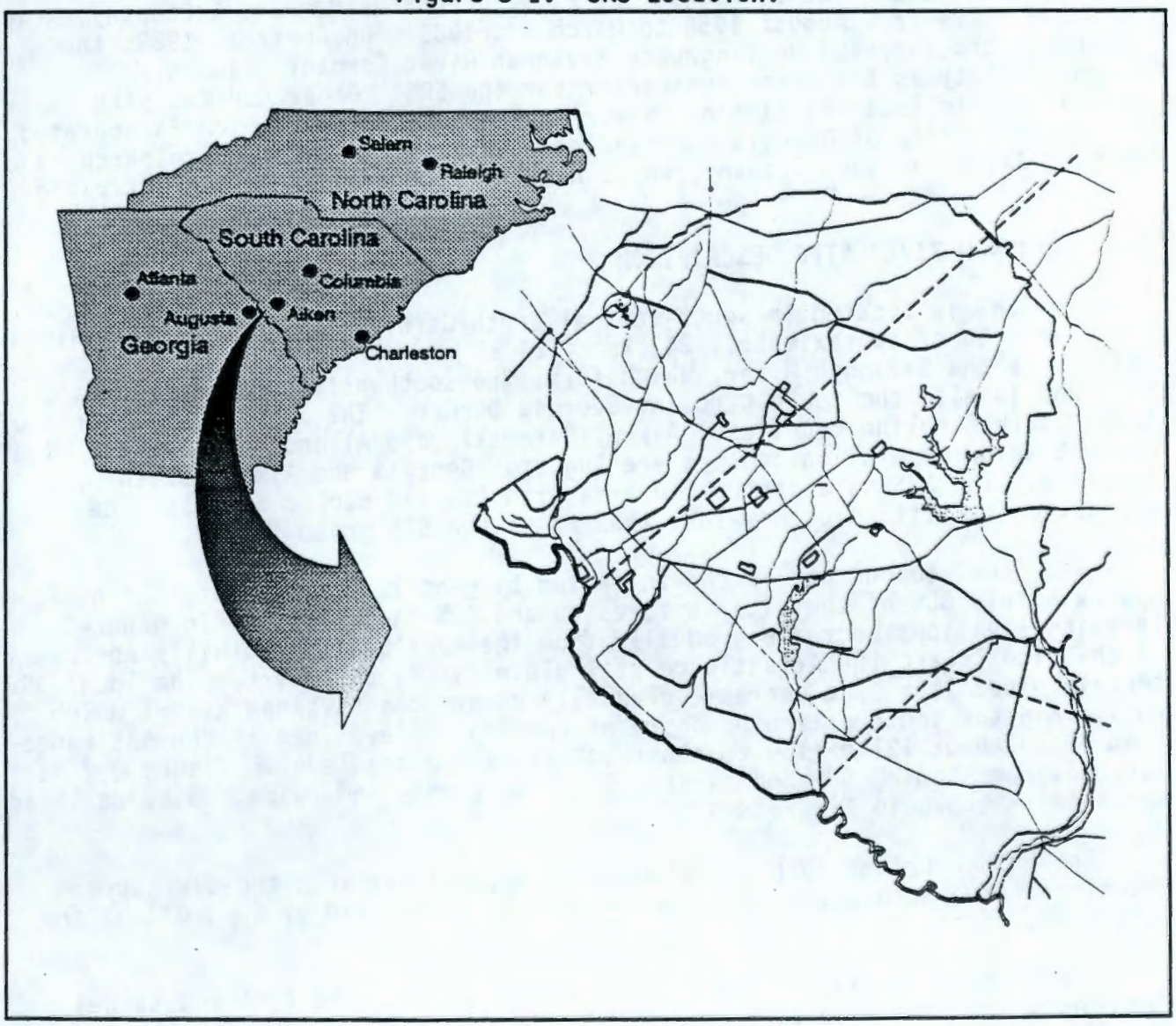

Major site facilities include five nuclear reactors, a fuel and target fabrication plant, a naval fuel materials facility, two chemical separations plants, the Defense Waste Processing Facility (DWPF), and the Savannah River Laboratory, which is a process development laboratory that supports production operations. Many other facilities necessary to support operations are located on the SRS, including the heavy water production plant. The heavy water production plant, located in the D Area, began operation in 1953 and was shut down in 1981. Of the five reactors at the SRS, three reactors were operating in 1988. The K Reactor operated from January 1 to April 10, 1988; the P Reactor operated from January to April and 10 days in August 1988; and the L Reactor began operation January 1, 1988. A fourth reactor, the C Reactor, operated until 1986, when it was shut down for repairs. The fifth reactor, the R Reactor, was permanently shut down in 1964.

The SRS has had two primary operations contractors since the start of operation in 1950. The first was the E. I. duPont de Nemours & Company, which operated there from August 1950 to March 31, 1989. On April 1, 1989, the second contractor, the Westinghouse Savannah River Company assumed responsibility as the prime contractor for the SRS. Other current site contractors include the Savannah River Ecology Laboratory, which is operated by the University of Georgia and handles both basic and applied research, and Bechtel Savannah River Company, which handles onsite construction activities.

8.2 SAVANNAH RIVER SITE DESCRIPTION

The SRS is located in south-central South Carolina and occupies an almost circular area of approximately 842 km^2 (325 mi^2). The major geophysical feature is the Savannah River, which forms the southwestern boundary of the site and is also the South Carolina-Georgia border. The SRS occupies parts of three South Carolina counties: Aiken, Barnwell, and Allendale Counties. The closest major population centers are Augusta, Georgia and Aiken, South Carolina. The SRS is a controlled area with limited public access. The production facilities occupy less than 8% of the SRS area.

The local topography is characterized by gently rolling, forested hills. Approximately 80% of the site is forested and 20% is wetlands. In general, terrain elevations decrease gradually from the Appalachian foothills northwest of the site toward the Atlantic coastal plain to the southeast. The local SRS terrain elevations also decrease gradually toward the Savannah River, which runs along the southwestern boundary of the SRS. Elevations at the SRS range from 30 to about 121 m (100 to about 400 ft) above sea level. Figure 8-2 is a site diagram showing SRS boundaries, area locations, and roads. Site railroad trackage is shown in Figure 8-3.

The SRS comprises 18 production, service, and research and development areas scattered across the site. Each area is identified by a numerical and letter designation.

The primary facilities are the production areas. The fuel and target components are manufactured in the 300-M Area and then are shipped to the site reactors. The targets and fuel are placed in heavy-water-moderated production reactors for irradiation. Originally, the site operated five reactors. Currently, two of the reactors, located in the 100-K and 100-L Areas, are

Figure 8-2. SRS Map.

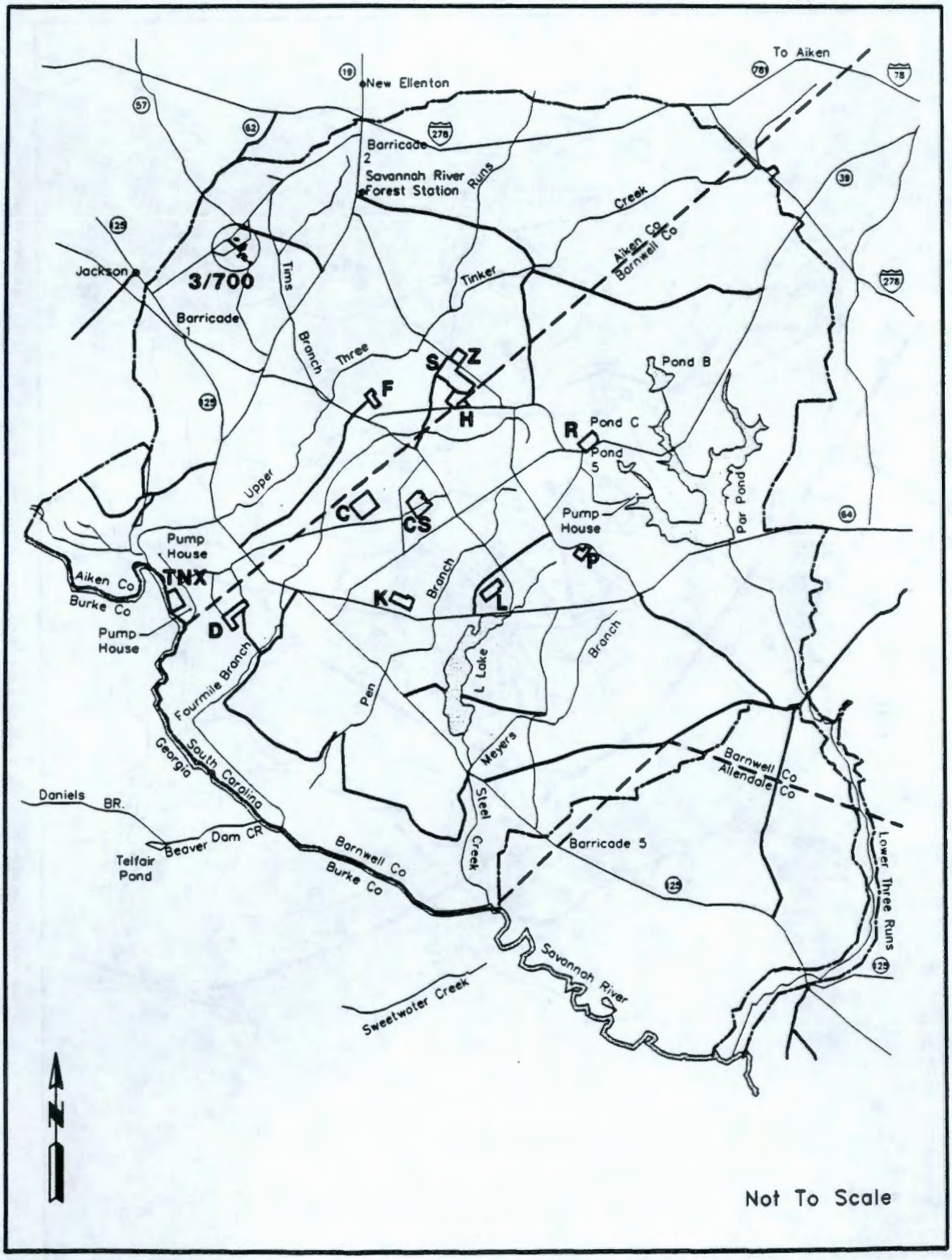

Figure 8-3. SRS Railroad Trackage.

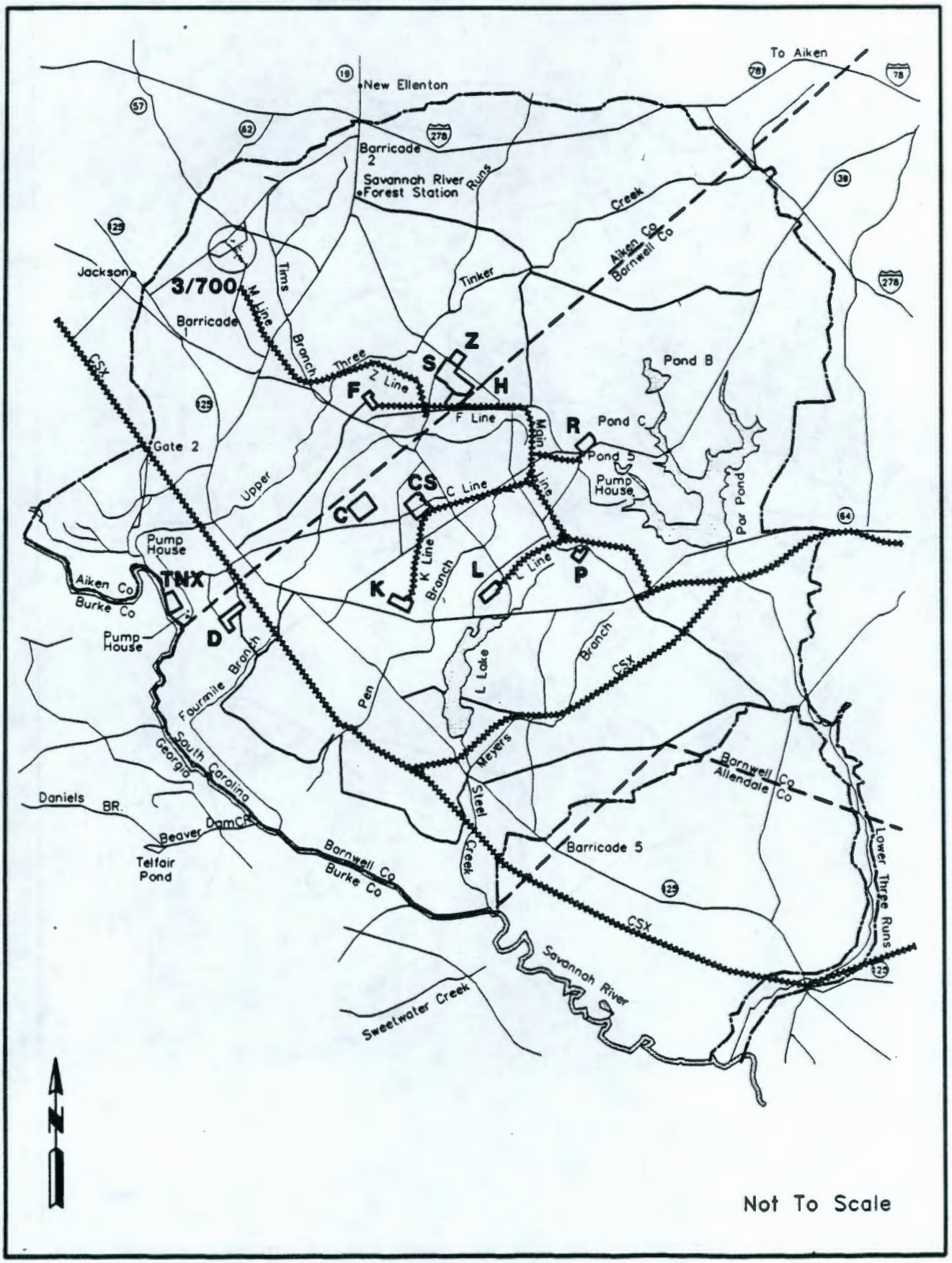

being prepared for possible operation. Two other reactors, located in the 100-P and 100-C Areas, are in cold standby. The fifth reactor, located in the R Area, is in a permanent shutdown status. The SRS reactors operated at relatively low temperatures and pressures and have not been used for the dual purpose of generating electricity. The reactors are cooled by a heavy-water moderator. The heavy water is then circulated through heat exchangers in a closed loop. Inside the heat exchangers, water withdrawn from the Savannah River and onsite cooling reservoirs is used to remove heat from the heavy water without contacting it. The heavy water is then recirculated through the reactor vessel, and river water is released through an outfall to onsite streams or cooling ponds before returning to the river.

The irradiated fuel is transported by shielded railroad cars to either the 200-F or -H Area canyons for the recovery of nuclear materials. The 200-F Area Tank Farm is shown in Figure 8-4, and the 200-H Area Tank Farm is shown in Figure 8-5. The 200-F and -H separations processes dissolve part of the irradiated components in acid and extract and separate the desired nuclear materials. This is done using the PUREX process that was discussed in Section 4.5.4. Other products are extracted from irradiated components in separate processes in the 200-H Area, resulting in a slightly higher radioactive level for the area waste. Recovery and purification of ^{239}Pu, ^{238}Pu, ^{238}U, and ^{235}U take place in these two areas.

The liquid radioactive waste generated by the separation facilities is neutralized and stored in USTs until it can be processed in the DWPF, currently under construction in the 200-S and -Z Areas. High- and low-level components of the tank waste will be separated for different disposal methods. High-level waste will be processed into a glass waste form for disposal in the federal geological repository when it becomes available. Until then the glass "logs" will be stored onsite. Low-level waste will be combined with a specially formulated cement to form saltstone, which will be stored in vaults at SRS. The nuclear material products are shipped to other DOE facilities for additional processing.

In addition to the USTs, the SRS has a centrally located 0.79-km^2 (196-acre) site between the 200-F and -H Areas for the disposal of solid LLW and the storage of TRU and mixed waste. The site also has storage buildings for nonradioactive hazardous wastes and mixed wastes located in the Central Shops and U Areas along with a central sanitary landfill.

The SRS also contains many production support, research and development, and waste management facilities. There are three operational coal-fired powerhouses located in the A, D, and H Areas. The powerhouses generate electricity and steam. The largest powerhouse, which is located in the 400-D Area, produces electricity and exports process steam to the C, F, H, and S Areas through an 11-km (7-mi) long steamline. The heavy-water rework facility used to purify the reactor moderator is also located in the D Area. A semi-works facility used to study chemical and waste processing problems and to test production-scale equipment is located in the 600-T Area. The 700-A Area includes the administrative facilities for the DOE and Westinghouse Savannah River Company and other contractors.

This page intentinally left blank.

Figure 8-4. 200-F Area Tank Farm.

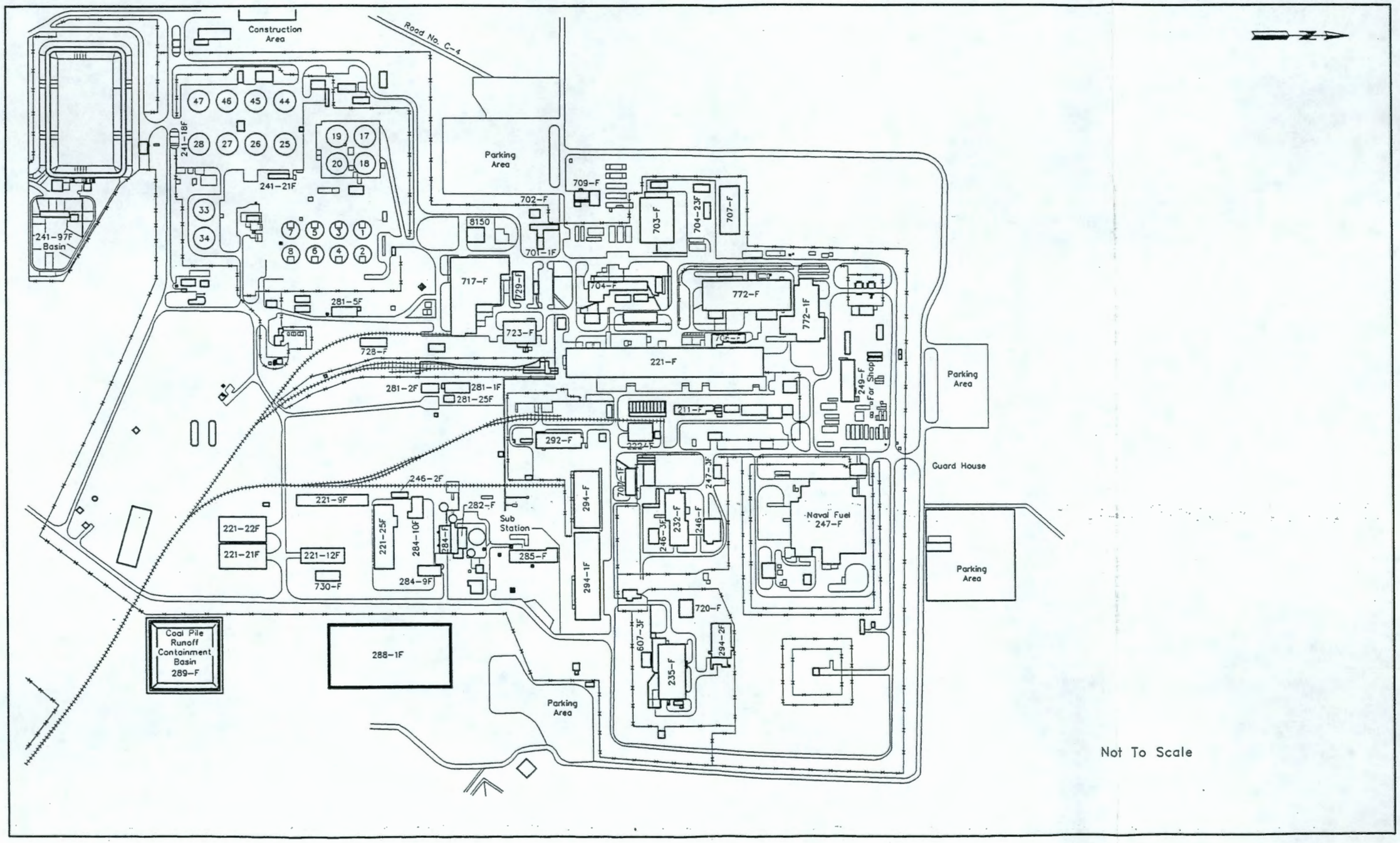

Figure 8-5. 200-H Area Tank Farm.

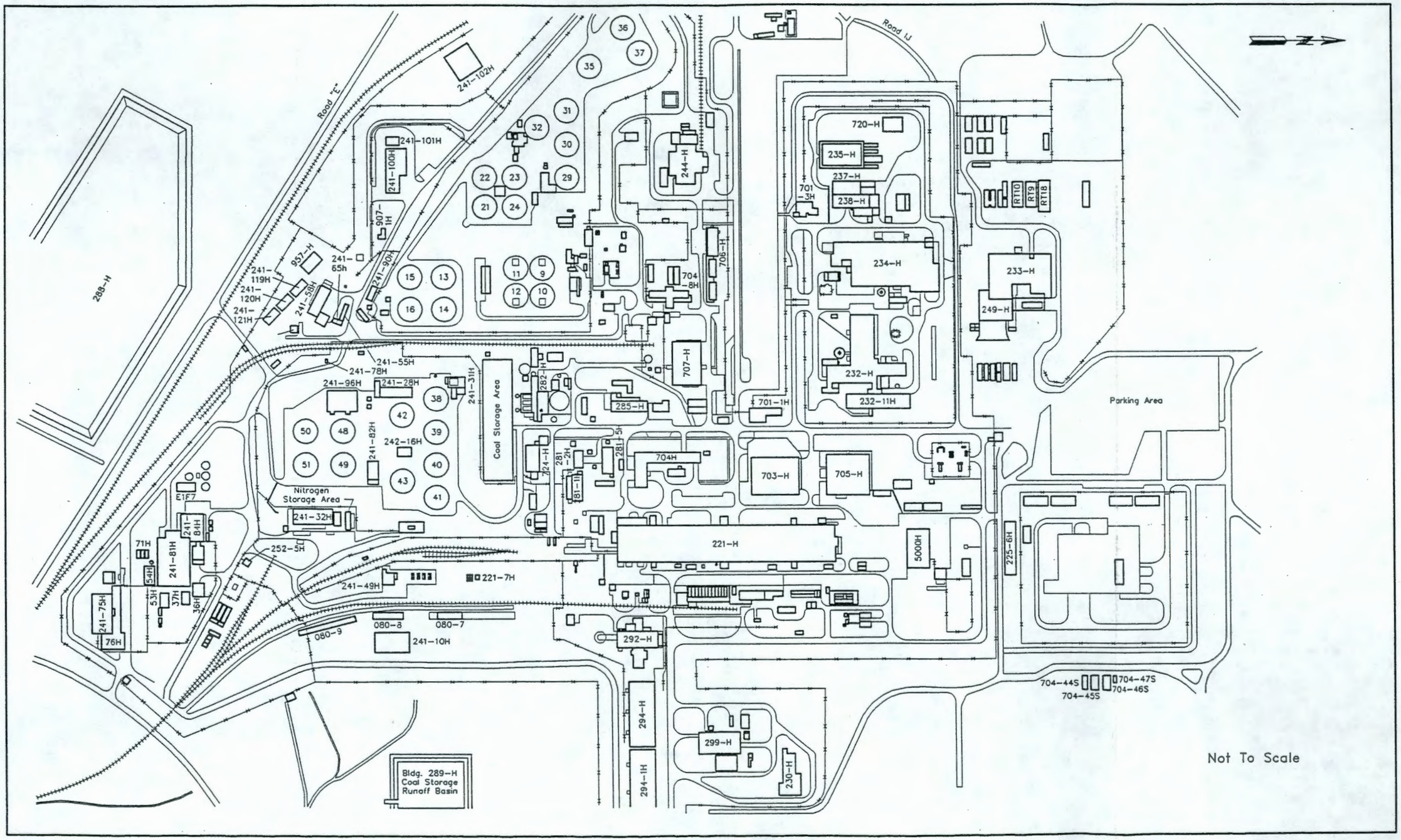

8.3 AMBIENT WEATHER AND CLIMATE CONDITIONS

This section describes the climatic conditions at the SRS. The information is from *A Climatological Description of the Savannah River Site* (Hunter 1990).

8.3.1 Climate

The climate of the southeastern United States, including the SRS area, is classified as humid subtropical. This climate is characterized by relatively short, mild winters and long, warm, and humid summers.

Summer weather usually lasts from May through September, when the area is strongly influenced by the western extension of the semipermanent Atlantic subtropical anticyclone (the "Bermuda High" pressure system). Winds are relatively light, and weather associated with migratory low-pressure systems and fronts usually remains well to the north of the area. The "Bermuda High" is a relatively persistent feature, resulting in few breaks in the summer heat. Daytime temperatures are frequently above 32 °C (90 °F), and temperatures of 38 °C (100 °F) or greater occur once per year on the average. The relatively hot and humid conditions often result in scattered afternoon and evening thunderstorms.

The influence of the "Bermuda High" begins to diminish during the fall, resulting in relatively dry weather and moderate temperatures. Fall days are frequently characterized by cool, clear mornings and warm, sunny afternoons.

During the winter, low pressure systems and associated fronts frequently affect the weather of the SRS area. Conditions often alternate between warm, moist subtropical air from the Gulf of Mexico region and cool, dry polar air. The Appalachian Mountains to the north and northwest of the SRS moderate the extremely cold temperatures associated with occasional outbreaks of arctic air. Consequently, less than one-third of all winter days have temperatures below freezing and temperatures below -6.7 °C (20 °F) occur infrequently. Frozen precipitation occurs less than once per year on the average.

8.3.2 Precipitation

Annual average precipitation is 122 cm (48.2 in.) for the SRS and 109 cm (43.1 in.) for Augusta. Precipitation is fairly well distributed throughout the year. Average precipitation during the fall months (September, October, and November) is slightly less than average for the other seasons, accounting for about 18% of the average annual total. For Augusta, precipitation totals greater than 0.03 cm (0.01 in) occur on an average of 107 days per year. The number of days per month with measurable precipitation range from an average of about 6 days in October to about 12 days in July.

Monthly precipitation extremes for Augusta varied from a high of 30.2 cm (11.9 in), recorded in March 1990, to a trace, observed in October 1959. The greatest observed rainfall for a 24-h period was 15.2 cm (5.98 in.) in

August 1964. Hourly observations from Augusta indicate that rainfall rates are usually less than 1.3 cm/h (0.5 in./h), although rates greater than this can be expected during spring and summer thunderstorms.

Winter storms that produce accumulations of ice or snow are rare. Snowfalls of 2.5 cm (1 in.) or greater occur once every 5 yr on the average. Furthermore, any accumulation of snow rarely lasts longer than 3 days. The average annual snowfall is 3 cm (1.2 in.)/yr and the average number of days per year with snow is 0.5. Significant snowfalls generally occur in February. For the reported period of record (1951 to 1986), snow was observed in each of the months from November through March.

Over 50% of the average annual total thunderstorms occur during the months of June, July, and August. The occurrence of thunderstorms is least frequent during the months of October through January, with an average occurrence of about 1 day/month.

8.3.3 Winds

The observed wind directions at all locations are fairly well distributed among the 16 wind direction sectors. Winds from the northeast, east-northeast, and south-southeast clockwise through the west-northwest sectors occur with relatively high frequencies (generally 7% to 10% of the time). Small differences in the actual occurrence frequencies among each tower's data set are believed to result primarily from nonconcurrent periods of unavailable data during the 5-yr period of record.

The hourly average wind speeds of less than 7.3 km/h (4.5 mi/h) generally occurred during approximately 10% of the hours recorded. For about half of the hours, wind speeds were less than 14.5 km/h (9 mi/h). During the 1975 to 1979 period, the average speed was greatest during the winter season, 13.1 km/h (8.1 mi/h), and least during the summer season, 10.2 km/h (6.3 mi/h). The highest monthly average wind speed occurred in March--13.1 km/h (8.1 mi/h), and the lowest monthly average wind speed occurred in August and September--9.0 km/h (5.6 mi/h). Augusta wind data were collected at 6.1 m (20 ft) above ground during this period.

Since operations began at the SRS, there have been six confirmed tornado occurrences on or in close proximity to the site: (1) late June 1952; (2) May 28, 1976; (3) July 2, 1976; (4) April 23, 1983; (5) August 26, 1985; and (6) October 1, 1989. On all occasions, only light to moderate damage was reported; however, none of this damage was to onsite production facilities. Investigations of tornadoes occurring near SRS in 1975 and 1976 indicated that maximum wind speeds were between 161 and 282 km/h (100 and 175 mi/h).

A total of 36 hurricanes have caused damage in South Carolina over the past 290 yr (1700 to 1989). The average frequency of hurricanes in the state is once every 8 yr; however, the observed interval between hurricane occurrences has ranged from 2 months to 27 yr. Eighty percent have occurred in August and September.

Because the SRS is approximately 161 km (100 mi) inland, winds associated with tropical weather systems can usually be expected to have diminished below

hurricane force (sustained speeds of 121 km/h [75 mi/h] or greater). Winds associated with hurricane Gracie, which passed to the north of the SRS on September 29, 1959, were measured as high as 121 km/h (75 mi/h) on an anemometer located in the F Area. No other hurricane force wind has been measured on the site. Extreme rainfall and tornadoes, which frequently accompany tropical weather systems, will usually have the most significant hurricane-related impact on SRS operations.

8.3.4 Temperature

At the SRS, the annual average temperature is 17.8 °C (64 °F). July is the warmest month, with an average high temperature of 33.1 °C (91.5 °F) and an average low of 21 °C (70.5 °F). January is the coldest month, with an average high temperature of 12.8 °C (55 °F) and an average low temperature of 1.7 °C (35 °F). Observed temperature extremes for SRS range from 41.7 °C to -19.4 °C (107 °F to -3 °F). Average and extreme temperatures for Augusta differ little from the SRS data.

Prolonged periods of cold weather seldom occur. Daytime high temperatures during the winter months are rarely less than 0 °C (32 °F). Conversely, high temperatures in the summer months are greater than 32.2 °C (90 °F) on more than half of all days.

8.3.5 Humidity

The average relative humidities for the SRS are greatest during the summer months and lowest during the spring months. The average daily relative humidity is about 90% in the early morning and around 43% in the afternoon.

Heavy fog, defined as fog that reduces visibility to less than 0.4 km (0.25 mi), occurred at Augusta on an average of about 28 days/yr during the period of 1951 through 1986. Monthly occurrence frequencies ranged from an average of about 3 days/month during the fall and winter months to slightly more than 1 day/month during the spring and summer months. The heavy fog observed at Augusta is often due to the proximity of the Savannah River. The frequency of naturally occurring fog at most of the SRS production areas would be expected to be less than that at Augusta because these facilities are located higher above river elevation than the Augusta weather station.

8.4 GEOLOGICAL AND HYDROLOGICAL CONDITIONS

The SRS lies mostly on the Aiken Plateau. The Aiken Plateau is bounded by the Savannah and Congaree rivers and slopes from an elevation of 198 m (650 ft) at the Fall Line to an elevation of approximately 76 m (250 ft). All elevations are based on mean sea level. The surface of the Aiken Plateau is highly dissected and is characterized by broad, interfluvial areas with narrow, steep-sided valleys. Relief is locally as much as 91 m (300 ft). The plateau is generally well drained although small, poorly drained depressions occur. The area is underlain by a wedge of seaward-dipping unconsolidated and semiconsolidated sediments.

Recent studies have found that the sediments mapped as Tuscaloosa at the SRS are geologically younger than the Tuscaloosa-type section in Alabama. The term, Tuscaloosa Formation, was retained, but "Tuscalloosa" is placed within quotation marks to indicate that it was used as a hydrostratigraphic term and not as a formal stratigraphic term. (Gordon et al. 1987)

The geological cross section of the SRS can be seen in Figure 8-6. The water table at the SRS ranges from 9.1 to 12.1 m (30 to 40 ft). This places it around the bottom concrete foundation of the USTs. As the water table level fluctuates, water will be "perched" on the concrete base slab on which the tanks are constructed. This can cause problems for leak monitoring and containment.

8.5 PROCESS HISTORY

Waste stored in the USTs was generated from a PUREX process. SRS has two process areas and canyons, F and H, that use this process. The F Area canyon was used for the recovery of plutonium, and the H Area was used to recover highly enriched uranium from reprocessed spent fuel. The enriched uranium was used to drive the SRS tritium production reactors. This process was suspended in 1989 for environmental reasons.

As was discussed in Section 4.5.4, the PUREX process is an advanced solvent extraction process that uses a tributyl phosphate in kerosene solvent for recovering uranium and plutonium from HNO_3 solutions of irradiated uranium. It is the process generally used worldwide for recovering uranium and plutonium. Nitric acid is used instead of metallic nitrates (e.g., aluminum nitrate) to promote the extraction of uranium and plutonium from an aqueous phase to an organic phase. Most of the HNO_3 in the waste was recovered by distillation and reused. The waste, containing residual HNO_3, was neutralized and stored in USTs.

8.5.1 Waste Concentration

Each waste tank farm (F and H) has two single-stage, bent-tube evaporators that are used to concentrate alkaline waste following receipt from the process canyons. Waste that is higher in radioactivity is segregated and allowed to age before evaporation. The aging allows separation of the sludge and supernate and also allows the shorter-lived radionuclides to decay to acceptable levels. Alkaline waste is also being segregated into low ruthenium waste and high ruthenium waste for processing in the DWFP. The 242-F, 242-16F, and the 242-16H evaporator systems process the low ruthenium waste; and the 242-H evaporator system processes high ruthenium waste. Radioactive waste, as received and stored in the tank farms, can be reduced to about 20% to 25% of its original volume and immobilized as crystallized salt (salt cake) by successive evaporations of the liquid supernate. Such dewatering operations have been carried on routinely in the F Area since 1960 and in the H Area since 1963. Since the first evaporator facilities began operations in 1960, more than 373,100 m^3 (98.5 Mgal) of space has been reclaimed. In the future, this concentration process will be supplemented with the DWPF for vitrification of HLW and conversion of LLW to saltstone.

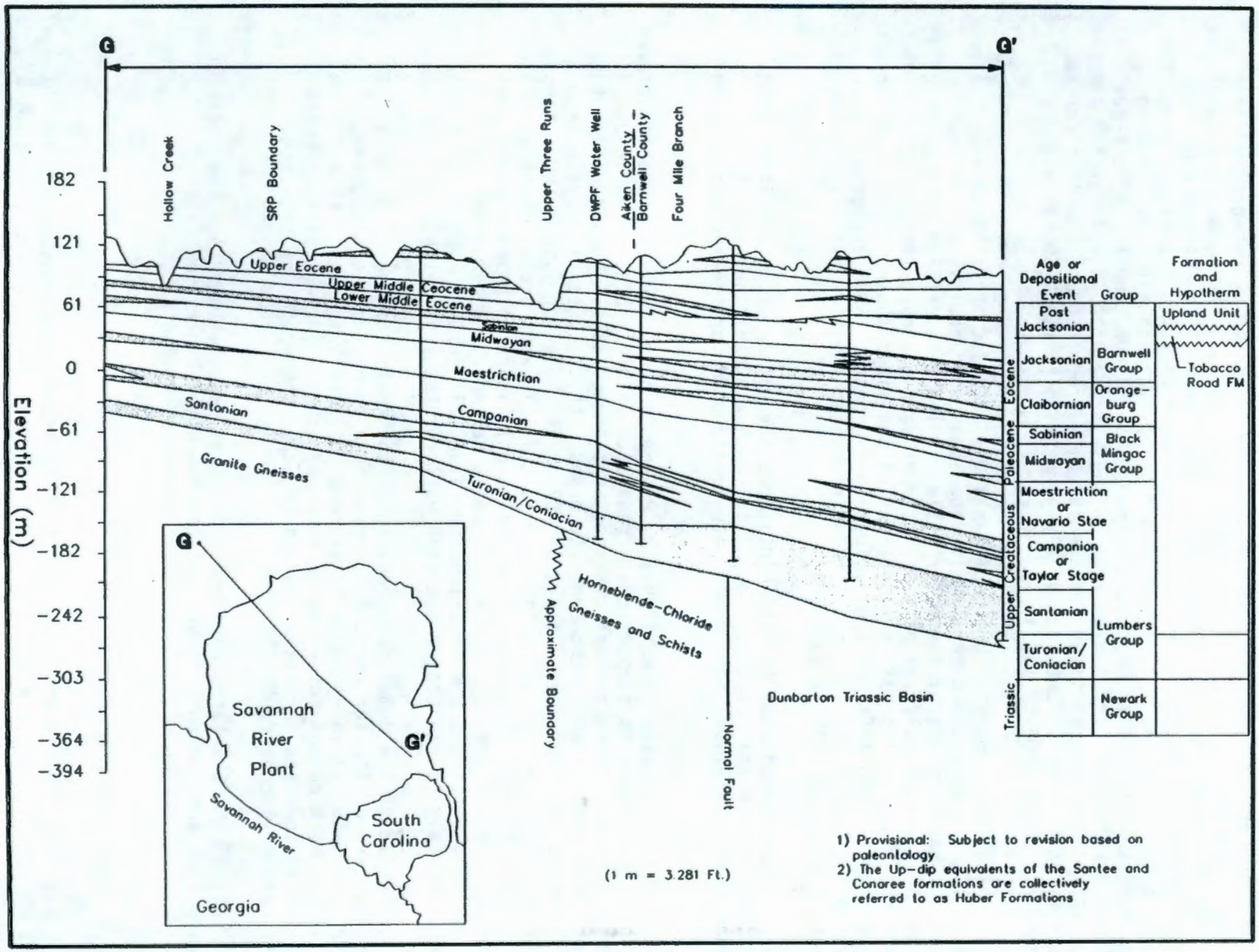

Figure 8-6. Savannah River Geological Cross Section (Davis et al. 1989).

8.6 UNDERGROUND STORAGE TANKS PHYSICAL CHARACTERISTICS

There are 51 large USTs on the SRS. The USTs can be categorized into 4 types and are identified numerically from 1 to 51. The combined capacity of all 51 of the SRS's USTs is 221,900 m^3 (58.6 Mgal). The tanks are divided into two tank farms, F and H, the same as their respective areas. Ten of the tanks are known to have leak sites in their primary liners. It has been observed that the leaks through the inner steel liner tend to be self-healing. The leak holes will crust over with salt as the leaking liquid dries. Another six tanks have been modified for use in waste processing of the feed for the vitrification plant. One tank is always kept empty (Tank 46-F) as an emergency spare (DOE-SR 1989).

Installation of each group of tanks was preceded by drilling exploration wells to determine the type of soil, load-bearing capacity, presence of cavities, and profile of the water table. Holes were drilled to a depth of at least 45.4 m (150 ft), one at the center of each proposed tank position. In 1951 and 1952, during soil explorations of the sites chosen for Type A tanks, some cavities and soft spots were found and grouted. Soil explorations for subsequent tank installations revealed some deep cavities extensive enough to require grouting (DOE-SR 1989).

A 10.2- to 15.2-cm (4- to 6-in.) concrete working slab was first laid completely over the bottom of the multiple-tank excavation. On this foundation, individual base slabs were constructed for the support of each tank.

The cooled waste tanks (Types A, B, and D) have heavy concrete structures with large columns to support their radiation-shield roofs. When in use, the tanks receive sizable thermal stresses in the base slab. Consequently, the tanks were set on reinforced concrete bases with thicknesses varying from 76.2 cm (30 in.) for Type A tanks to 107 cm (42 in.) for Type B and D tanks. Footings under center columns in Type II and III tanks are as thick as 163 cm (64 in.). All of these tanks have dual steel liners; a primary liner that extends to cover the top of the tank and a secondary carbon steel pan. This outer liner extends 1.5 m (5 ft) up the side wall for the Type A and B tanks and completely to the top of the side wall for the Type D tanks (DOE-SR 1989).

Because of the domed construction of the roof, the uncooled tanks (Type C) are of lighter construction and have no roof support columns. They have a 10.2-cm- (4-in.-) thick reinforced concrete base slab with a 7.5-cm- (3-in.-) thick cement cover. Also included is a 33.0-cm- (13-in.-) thick reinforced concrete perimeter footing to carry the weight of the tank wall, roof, and soil cover (DOE-SR 1989).

All of the SRS tanks have numerous riser penetrations into the interior of the tank and the annulus between the two steel liners for Types A, B, and D. They are usually plugged with concrete or lead plugs.

8.6.1 Type A Double-Shell Tanks

The Type A tanks are the original 12 storage tanks constructed during 1951 and 1953. They are known locally as Type I tanks. Tanks 1 through 8

were placed in the F Area, and Tanks 9 through 12 are located in the H Area. The primary liner has an operating capacity of 2,730 m^3 (0.72 Mgal) with a maximum capacity of 2,840 m^3 (0.75 Mgal). The inner diameter of the primary liner is 23 m (75 ft) and the height is 7.5 m (24.5 ft). Figure 8-7 shows the Type A tanks, including the primary liner, the secondary pan, and the concrete support structure.

Figure 8-7. Savannah River Type A Double-Shell Tank.

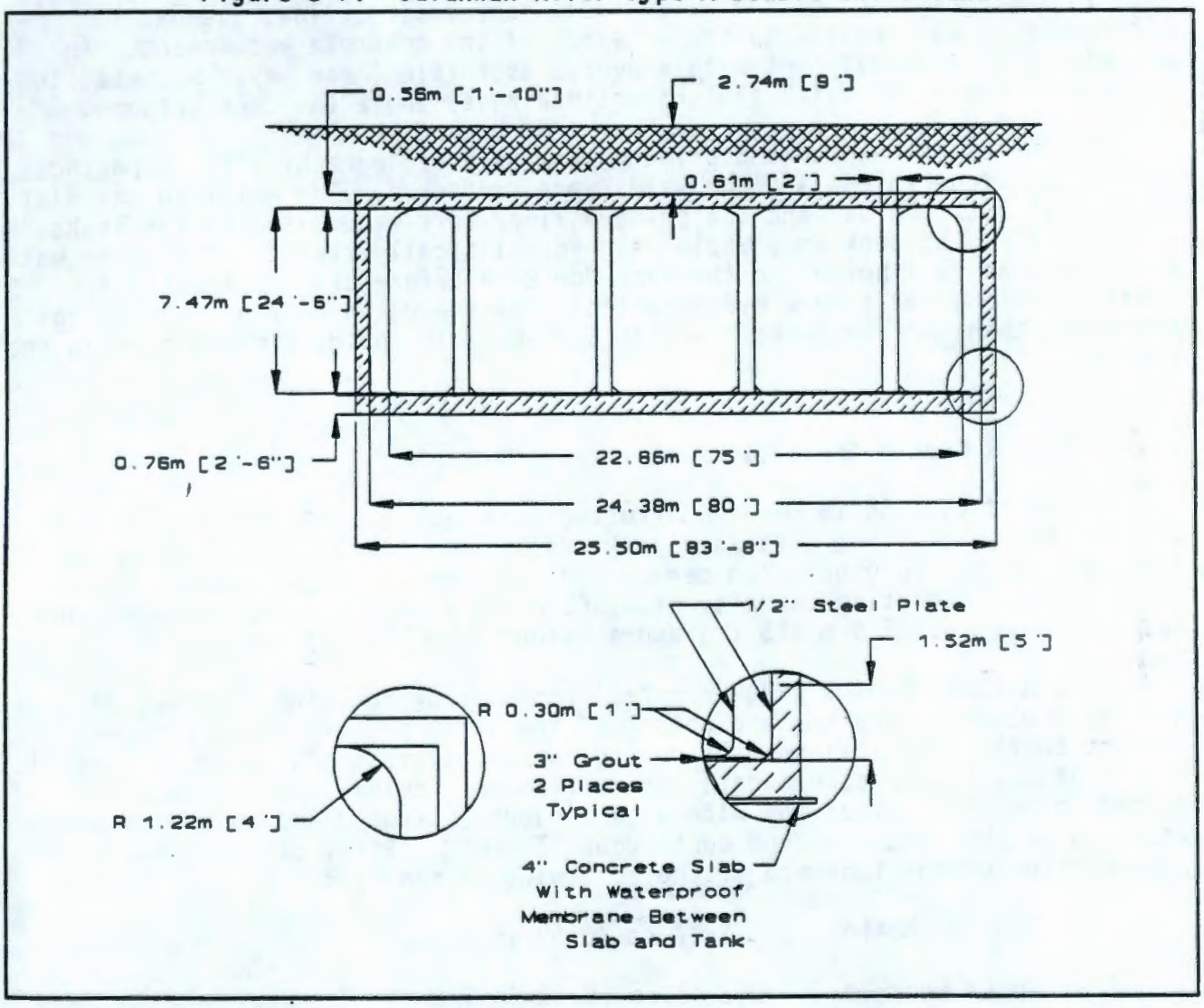

The primary liner is a closed cylinder with a flat top and bottom constructed from 1.3-cm- (0.5-in.-) thick carbon steel plate. The top and bottom are joined to the cylindrical side wall by curved knuckle plates. The primary liner is set in a cylindrical pan of 1.3-cm- (0.5-in.-) thick carbon steel plate. It is 1.5 m (5 ft) deep, and 1.5 m (5 ft) larger than the primary liner diameter. This secondary liner, the pan, provides a 0.76-m- (2.5-ft-) wide intervening annulus. The assembly of the primary and secondary liners is surrounded by a cylindrical reinforced-concrete enclosure with a flat concrete roof and foundation slab. Twelve concrete columns were installed within the primary liner to support the flat concrete roof. They

are each 0.61 m (2 ft) in diameter with flared capitals and were encased in 1.3-cm (0.5-in.) carbon steel plate. The concrete wall and roof are 56 cm (22 in.) thick. The base slab is 0.76 m (2.5 ft) thick. These tanks are covered by 2.7 m (9 ft) of soil for shielding. The tanks are also equipped with 36 parallel cooling water coils that are suspended from the ceiling inside the primary liner.

In the F Area, where the water table is relatively low, standard waterproofing was applied to the exterior of the concrete encasement. An additional brick encasement with a poured asphaltic inner layer was used in the H Area where the water table sometimes rises above the tank bottoms.

All welds in the pan and primary tank were radiographically inspected, defects were corrected, and the welds were rechecked. The welds in the flat bottoms of both the pan and the primary liner were vacuum-tested for leaks. Additionally, the tank as a whole was hydrostatically tested. The water was maintained at full height in the tank for 24 h before being inspected for leaks. Cooling coils were hydrostatically tested using 20.7-bar (300-psig) water and then were leak-tested using 6.89-bar (100-psig) air pressure in the piping.

8.6.2 Type B Double-Shell Tanks

Tanks 13 through 16 were constructed from 1955 to 1966 in the SRS H Area and are designated Type B tanks. They are known locally as Type II tanks. They are the second-generation design and are shown in Figure 8-8. These tanks have an operating capacity of 3,900 m^3 (1.03 Mgal). The primary liner has a diameter of 25.9 m (85 ft) and a height of 8.2 m (27 ft).

Type B tanks have a single central roof-supported column instead of multiple columns. The top and bottom of the steel primary container were jointed to the outer cylinder by curved knuckle plates. The primary liner is flared at the top to accommodate the roof-support column. This liner is joined to the flat steel top with a continuous butt weld and to a base plate fastened to the bottom with a continuous "T" weld. Steel plates used in the construction of the tank are of the following thicknesses:

- Top and bottom 1.27 cm (0.50 in.)
- Upper knuckle 1.43 cm (0.56 in.)
- Wall 1.27 cm (0.50 in.)
- Lower knuckle 2.22 cm (0.88 in.).

The primary liner was set on a 2.54-cm (1-in.) sand bed within a circular secondary liner (pan) of 1.27-cm (0.5-in.) carbon steel plate. The secondary liner is 1.52 m (5 ft) larger in diameter then the primary liner and extends 1.52 m (5 ft) up the concrete side walls. This provides for a 0.76-m (2.5-ft) annular space between the two liners. The secondary liner sits on two 2.54-cm- (1-in.-) thick grout layers between the liner and the base slab. The primary and secondary liners were encased in a reinforced concrete shell. The

Figure 8-8. Savannah River Type B Double-Shell Tank.

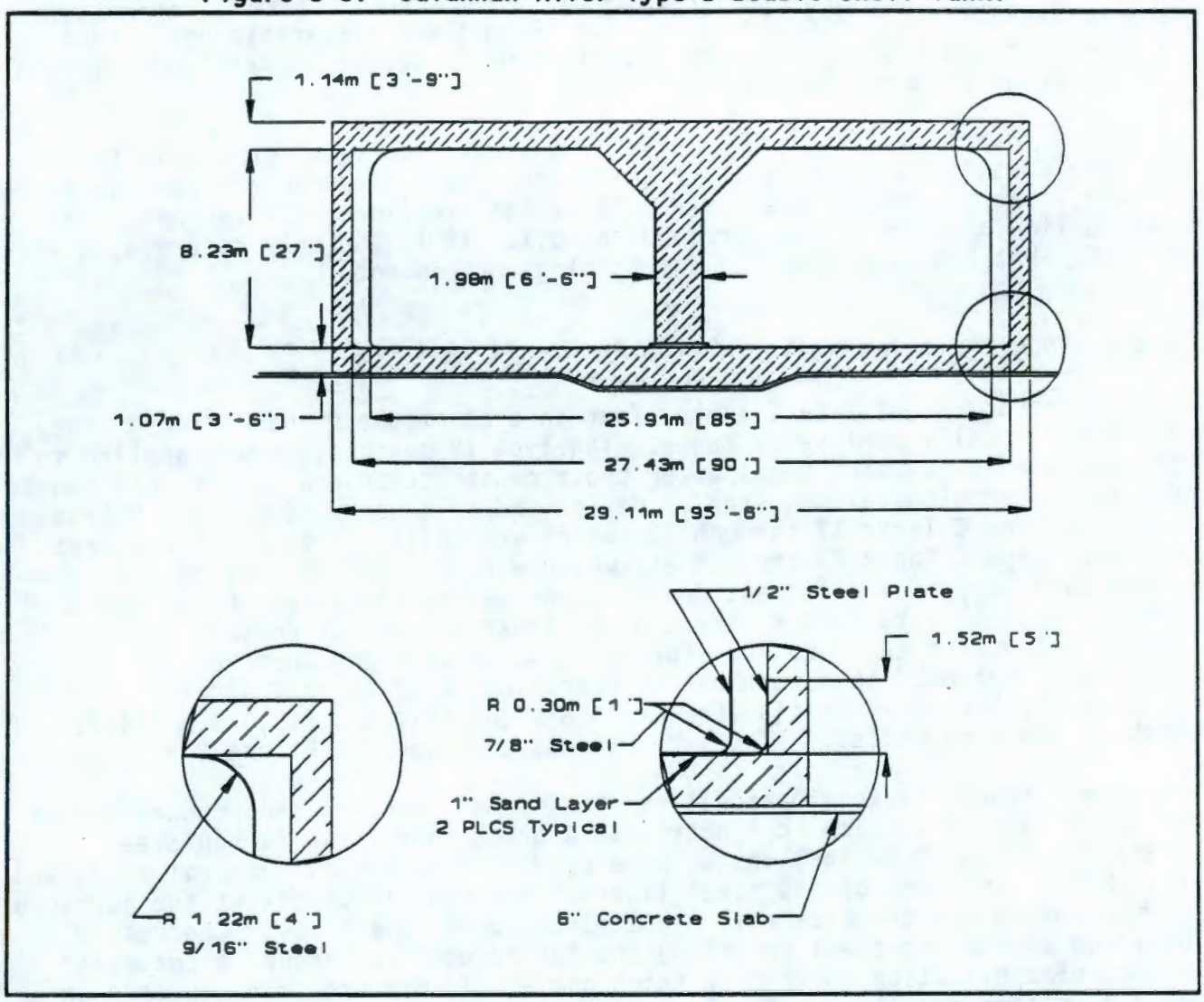

walls are 83.8 cm (33 in.) thick, and the top and bottom shells are 114 and 107 cm (45 and 42 in.) thick, respectively. The top of the tank is flush with the ground. The tanks were placed above the highest expected elevation of the water table, so only standard waterproofing was applied. However, the actual water table has been observed as high as 2.42 m (8 ft) above the bottom of the tanks. Waste cooling is provided for each Type B tank by 44 parallel cooling water coils suspended from the roof. A condenser, filter, and blower are installed in the tank ventilation system.

All welds in the primary liners were radiographically inspected. The defects were corrected and then rechecked radiographically. The secondary liners were not inspected radiographically. The welds in the flat bottoms of the secondary and primary liners were vacuum-tested for leaks, and the tank as a whole was hydrostatically tested. Cooling water piping was hydrostatically tested using 20.9-bar (300-psi) water and then leak-tested, using soap solution, with 7.0-bar (100-psi) air pressure in the piping.

The top openings into the tanks and annular spaces are similar to those in the Type I tanks and are used for either instrumentation or for ventilation

system connections. Additional 20.3-cm (8-in.) annulus access ports have been drilled through the roof of each Type II tank to permit surveillance of most of the outer primary liner wall.

All four Type B tanks have developed stress corrosion cracks in the primary vessels, allowing some waste to seep into the secondary pans under the primary liners. One of these tanks (Tank 16) overflowed its secondary pan and leaked liquid waste to the surrounding soil. It is the only recorded tank at the SRS that has leaked to the surrounding environment.

8.6.3 Type C Single-Shell Tanks

There are eight Type C tanks, four in each of the F and H Areas. They are known locally as Type IV tanks. The Type IV designation was applied to the uncooled tanks many years after their construction and is not intended to denote a chronological sequence of design and/or construction. The F Area contains Type C Tanks 17 through 20, which were built in 1958. The H Area contains Type C Tanks 21 through 24, which were built from 1959 to 1961. These tanks are of a different design than the described Type A, B, and D tanks. Type C tanks have a single steel liner and do not contain cooling coils. They were designed for storage of waste that does not require auxiliary cooling. Each tank has an operating capacity of 4,920 m^3 (1.3 Mgal), has an inner diameter of 25.8 m (85 ft), and is 10.3 m (34 ft) high at the side walls. The Type C tanks are shown in Figure 8-9.

Each Type C tank is basically a steel-lined, prestressed, concrete tank in the form of a vertical cylinder with a domed roof. The carbon steel plates, 0.95 cm (0.38 in.) thick, were used to form the cylindrical sides and flat bottom portions of the steel liners. The knuckle plates at the juncture of the bottom and the side wall are 1.11 cm (0.44 in.) thick. Concrete was built up around the steel vessel by the "shotcrete" technique, a pneumatic method of application in which a thick semi-fluid mixture is blown through a nozzle to form a built-up structure. A dense, high-strength concrete is formed which enhances the load-carrying capability of the wall. No secondary steel pan was provided for these tanks. The wall was prestressed by embedding girths of steel under tension in the outer layers of the wall, thereby applying a compressive force to the inner layers and to the steel liner. When a tank built in this manner is filled, the outward pressure of the contained fluid offsets, approximately, the compressive prestresses in the inner layers of the concrete. In effect, the concrete wall becomes a structure with negligible internal circumferential stresses, and the burden of the tank's contents is transferred to the steel bands near the outer surface of the concrete.

All welds in the steel liners were x-rayed. All of the welded tank-bottom seams and the upper seams of the knuckle rings were vacuum leak tested. Each tank was hydrostatically tested by filling it with water to the normal fill line before the backfilling operation. Then the tanks were allowed to remain filled until placed in use for waste storage.

Figure 8-9. Savannah River Type C Single-Shell Tank.

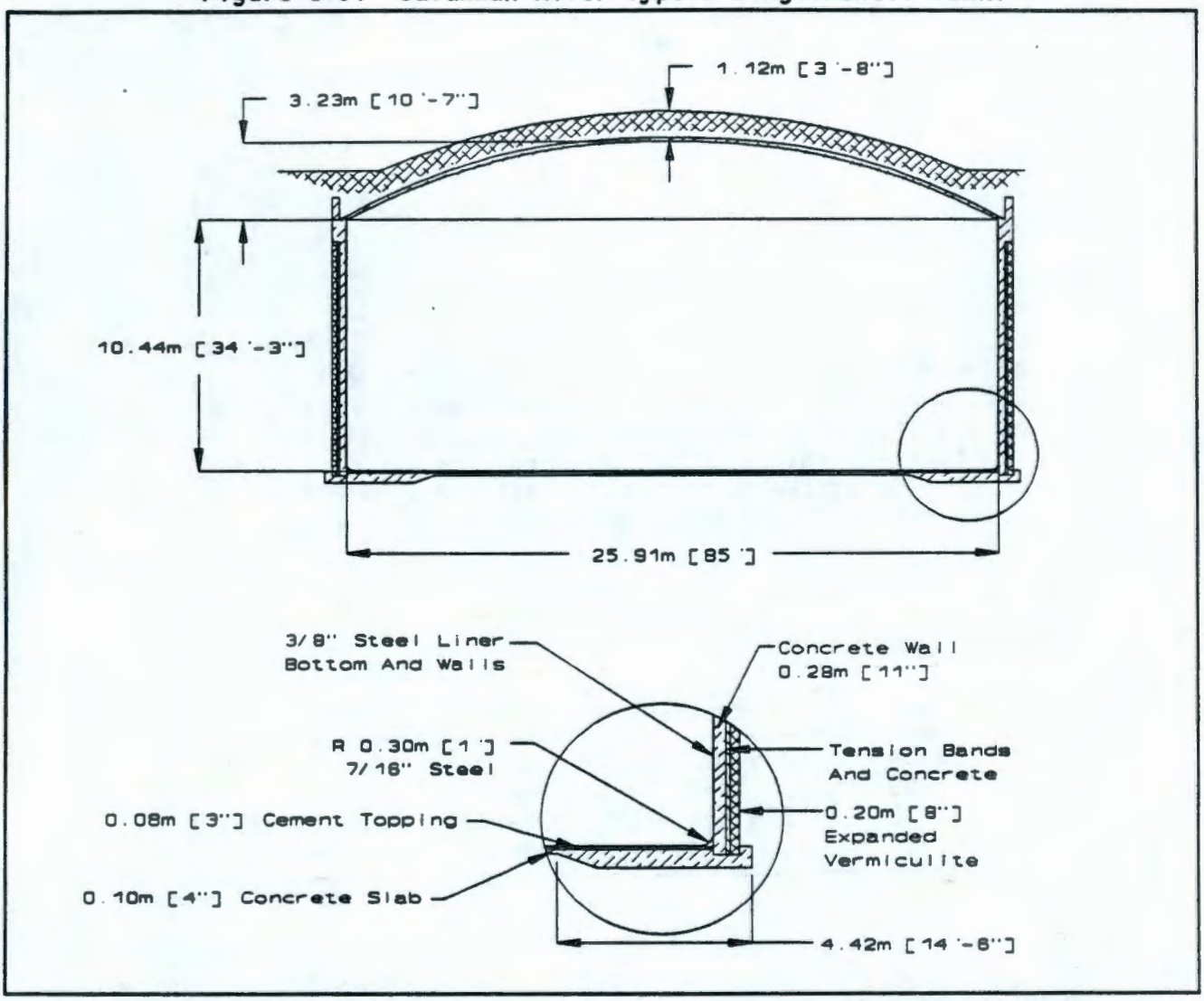

Leak detection for the bottoms of these tanks is provided by a grid of channels in the concrete foundations that drain to a sump outside the periphery of the tank wall. A 10.2-cm (4-in.) pipe rises to the ground level from the sump to allow for liquid level measurement, sampling, and pumpout of collected fluid. To detect gross leakage through the sidewalls, an additional leak detection feature was provided for the H Area tanks in the form of a circumferential open-topped drainage channel, filled with crushed stone, outside the concrete tank wall adjacent to the wall foundation. Two vertical pipes, on opposite sides of the individual tanks, were installed down to the channel to provide a means for detecting leakage, should any come through the tank wall and drain into the gutter. Unfortunately the gutters are submerged in groundwater "perched" above the concrete working pad around the tank bases; this groundwater hinders the sensitivity of the system.

Radiation shielding of the Type C tanks in the F Area was accomplished by applying at least 81.3 cm (32 in.) of earth over each of the 17.3-cm- (7-in.-) thick concrete domes. The H Area tanks were shielded similarly, except that the earth cover was at least 112 cm (44 in.) thick to accommodate a somewhat higher radiation level from the waste.

The Type C tanks are connected so that a single exhaust system provides interior purge through pairs of tanks. However, there is a valve between the pairs of tanks so that the system can be operated independently by connecting a portable filter system to any of the tanks. The original exhaust filter housings were packed with fiberglass mattering in layers of various densities. The HEPA filters have been substituted in the exhaust of four Type IV tanks (Tanks 19, 20, 22, and 24). All tanks have forced negative exhaust ventilation.

8.6.4 Type D Double-Shell Tanks

The tanks constructed most recently were designated Type D tanks. They are known locally as Type III tanks. Twenty-seven Type D tanks have been completed and are in use. These tanks have been built in both the H and the F Areas. Each tank has an operating capacity of 4,920 m^3 (1.3 Mgal) and the primary liner has a diameter of 25.8 m (85 ft) and a height of 10 m (33 ft). Table 8-1 outlines Type D tank locations and construction dates.

Table 8-1. SRS Type D Underground Storage Tank Construction History.

F Area		H Area	
Tank	Construction	Tank	Construction
33-34	1969 to 1972	29-32	1967 to 1970
25-28	1980	35-37	1977
44-47	1980 to 1982	38-43	1980 to 1982
		48-51	1980 to 1982

In 1965 the Type D tank design was developed after an investigation of leaks from Type A and B primary tank liners. These leaks have ranged widely in magnitude and have affected five Type A and four Type B tanks. The conclusions of the study were that the primary leak producing mechanisms were stress corrosion cracking at sites in or near the weld seams, and that stress relieving after fabrication should eliminate the cracking. For the Type B tanks, means were provided for heating each finished steel primary liner to relieve the stresses generated during fabrication. In addition, some stress patterns were avoided or minimized by mounting the roof supporting column on the concrete foundation pad instead of on top of the primary liner. There is also an annular clearance between the supporting column and the surrounding primary steel liner. This modern design is shown in Figure 8-10.

Each primary liner for the Type D tanks is made of two concentric cylinders joined to washer-shaped top and bottom plates by curved knuckle plates. Plate thicknesses are listed in Table 8-2.

Figure 8-10. Savannah River Type D Double-Shell Tank.

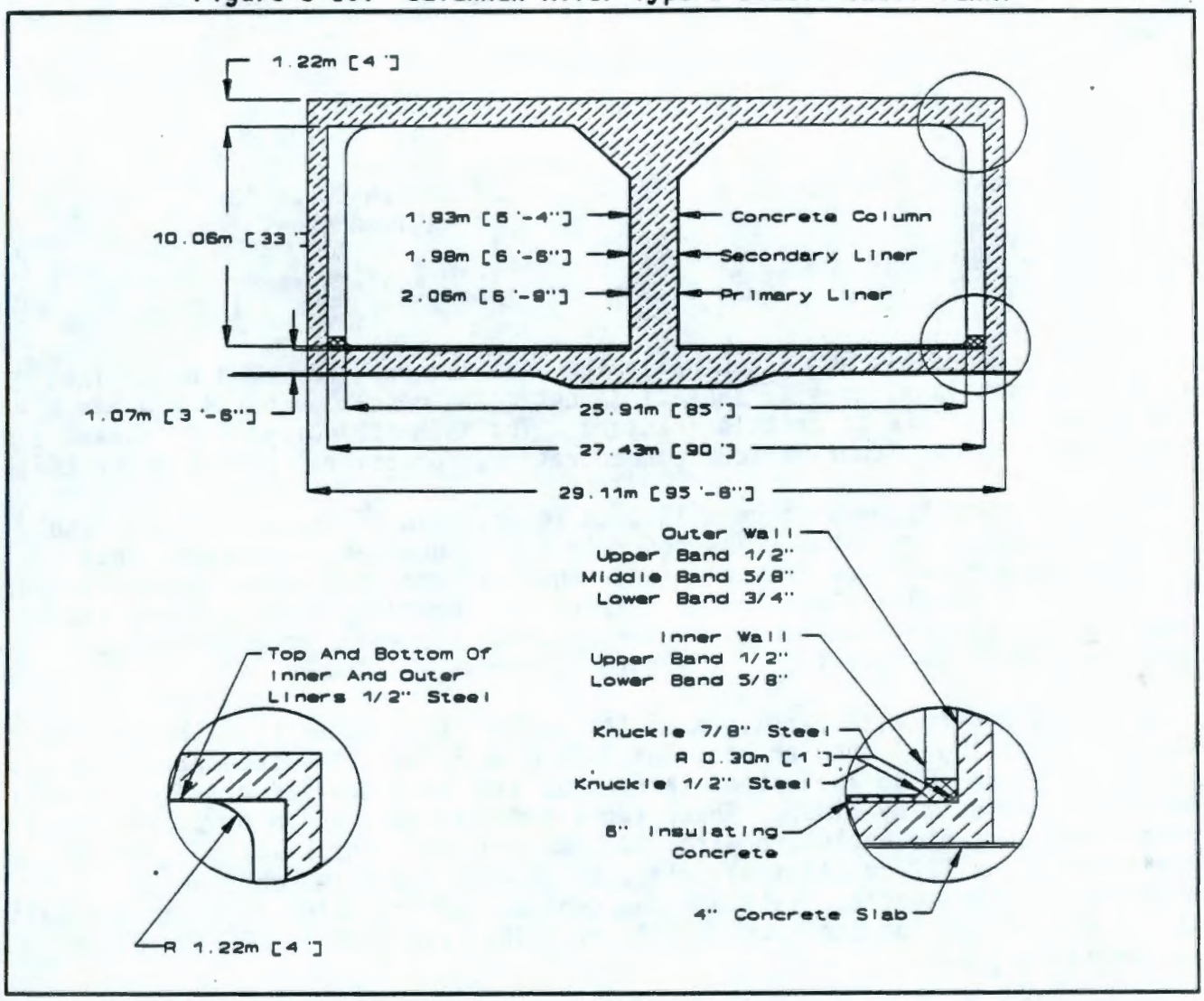

Table 8-2. SRS Type D Underground Storage Tank Plate Thicknesses.

Plate	Thickness	
	cm	in.
Top, bottom, and upper knuckle	1.3	0.500
Inner wall, upper band	1.3	0.500
Inner wall, lower band	1.6	0.625
Outer wall, upper band	1.3	0.500
Outer wall, middle band	1.6	0.625
Outer wall, lower band	1.9	0.750
Lower knuckle, outer (29 - 32)	2.5	1.000
Lower knuckle, outer (all other III)	2.2	0.875
Lower knuckle, inner	1.3	0.500

The Type III tanks were made from the following three types of carbon steel:

- Tanks 29-32 and 33-34 — ASTM A516-Grade 70 hot-rolled steel
- Tanks 25-28, 35-37, and 44-47 — ASTM A516-Grade 70 normalized steel
- Tanks 38-43 and 48-51 — ASTM A537-Class I.

All three steels are essentially the same composition. The normalized heat treatment (analogous to annealing) optimizes notch toughness and hence increases resistance to brittle fracture. The ASTM A537-Class I is normalized steel also and has lower maximum concentrations for several common impurities.

The primary liner sits on a 15.2-cm (6-in.) bed of insulating concrete within the secondary liner. The concrete bed is grooved radially so that ventilating air can flow from the inner annulus (around the supporting column) and the outer annulus (between the primary and secondary liners). Any liquid leaking from the tank bottom or center annulus wall would move through the slots and would be detected at the outer annulus.

The secondary liner is 1.5 m (5 ft) larger in diameter than the primary vessel, providing an annular space of 0.76 m (2.5 ft). The secondary liner is made of 0.95-cm (0.38-in.) steel throughout and its sidewalls rise to the full height of the primary liner. These two liners are surrounded by a cylindrical reinforced concrete enclosure with 76.2-cm- (30-in.-) thick walls. The enclosure has a 122-cm (48-in.), flat, reinforced concrete roof, which is supported by the concrete wall and the central column, which is located within the inner cylinder of the secondary liner. The base slab is 107 to 163 cm (42 to 64 in.) thick.

The tanks in the H Area were built above the natural grade and surrounded with mounded earth because of the high water table. A lower water table in the F Area permitted installation of these tanks with their tops flush with the natural grade. Because the tanks are above predicted water tables, only standard waterproofing was applied to the concrete enclosures. The highest measured water table was at least 0.91 m (3 ft) below the Type D tank bottoms.

All butt welds on the primary liners, except welds on the horizontal roof surface, and all butt welds on the secondary liners joining bottom plates, knuckle plates, and the lowest courses of the center column and outer-wall plates were radiographically inspected. Defects were corrected and then rechecked. Beginning with the 1974 tanks, all plate welds in the secondary liners were also radiographically inspected. All of the tank welds were vacuum leak-tested and/or tested using magnetic particle or liquid penetrant techniques. Any defects were repaired and then reinspected.

Each primary liner was stress relieved in place after all burning, cutting, welding, and other high-temperature work below the liquid fill line had been completed. Full stress relief at 593 °C (1100 °F) was accomplished

in accordance with the general requirements of the American Society of Mechanical Engineers *Boiler and Pressure Vessel Code* (ASME 1986).

A full hydrostatic test, consisting of filling each tank to a depth of 9.7 m (32 ft) and allowing it to stand 48 h, was conducted after stress relieving. No leaks were found by this test. All circumferential welds in the pipe loops of the removable cooling coil bundles below the 1.3-cm-(0.5-in-) thick plate at the base of the riser plug were radiographed. The assembled cooler piping was tested hydrostatically to 34.8 bar (500 psi) and halide leak tested at 2.1 bar (30 psi).

Cooling of liquid waste in the first seven Type B tanks (Tanks 29 to 35) is accomplished by removable cooling coil bundles that are suspended in the tank through the concrete roof. A maximum of 10 cooling units can be suspended in each tank through risers. Each cooling unit has a heat removal capacity of 176,000 W (600,000 Btu/h) from freely convective liquid waste. All of the other Type D tanks use permanently installed cooling coils similar to those in Types A and B tanks. In fresh waste service (liquid plus about 8% sludge), the total heat removal capacity is 1.76 MW (6.01 MBtu/h). This is the same for either cooling coil design.

8.6.5 Tank Auxiliaries

Liquid level for waste in the primary liner is measured using a conductivity probe on the end of a graduated tape reeled in or out by a motor drive. A fixed-height probe is used for a backup high-level detection. At least two conductivity probes are installed in each annulus to detect the presence of any liquid in the secondary liner.

Each tank is equipped with several thermowells, each with multiple thermocouples. Type D tanks have stainless steel thermowells. Temperatures are measured from the bottom of the primary liner to the top of the tank. Thermocouples are also used for primary wall, cooling water exit, and tank vent temperature. All readings are displayed in the control house.

All cooling coil units are equipped with pressure relief valves at the outlet. The lines also are equipped for pressure gauges. Type D tanks also have connections for a flowmeter.

8.7 UNDERGROUND STORAGE TANK WASTE PHYSICAL CHARACTERISTICS

The processes in the H and F Areas have generated over 128,650 m^3 (34.0 Mgal) of HLW. This waste has three general physical types: sludge, salt cake, and supernatant. The SRS waste is similar to waste generated at the Hanford Site, except that it is more concentrated and hence gives off more radioactive decay heat. Table 8-3 shows the waste volumes by type and by area. A tank-by-tank listing is found in Table E-1.

Table 8-3. Savannah River Tank Farm Waste Volumes.

Farm		Liquid	Sludge	Salt cake	Total
F	m^3	20,450	5,180	28,840	54,470
	gal	5,402,000	1,369,000	7,618,000	14,389,000
H	m^3	38,090	9,350	26,740	74,180
	gal	10,063,000	2,469,000	7,065,000	19,597,000
Total	m^3	58,540	14,530	55,580	128,650
	gal	15,465,000	3,838,000	14,683,000	33,986,000

The range of tank fullness for the SRS tanks is shown in Figure 8-11.

Figure 8-11. Percent of Operating Capacity with Waste.

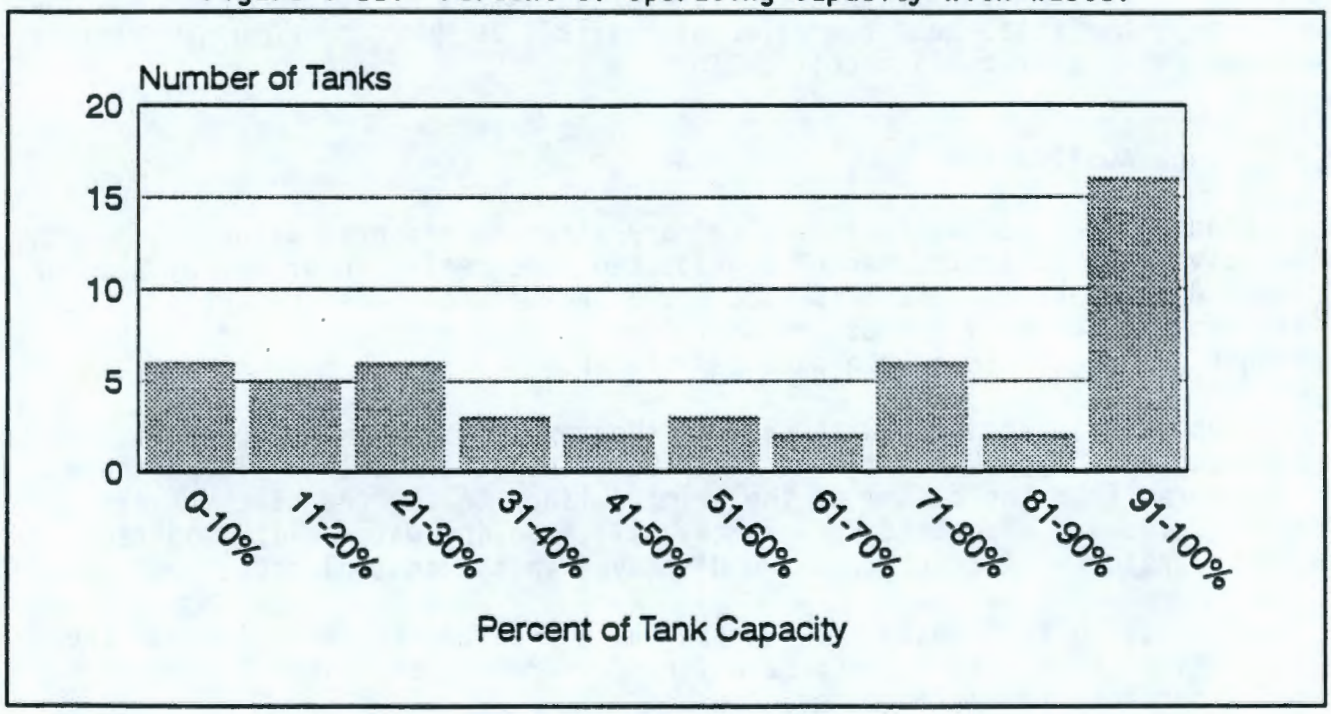

The following sections describe the three waste forms at the SRS. Waste at the SRS has not been concentrated to a dry solid form. A 0.3- to 0.6-m (1- to 2-ft) layer of supernatant is kept on top of all tank waste at all times.

8.7.1 Supernatant Description

Supernatant is the remaining liquid portion of the neutralized process waste. It is saturated with nitrate and nitrite salts, primarily sodium. It has essentially the same chemical and radiological composition as the salt cake. Average density and water content are 1.1 g/cm^3 (9.2 lb/gal) and 71%, respectively.

8.7.2 Sludge Description

Sludge consists primarily of heavy metals and various oxides such as iron, manganese, aluminum, and mercury. Sludge results from the neutralization of the acidic process waste, allowing the dissolved metals to precipitate out of solution. This waste also contains the insoluble radionuclides ^{90}Sr and ^{239}Pu. As a consequence, sludge is largely insoluble in the alkaline supernatant. A typical density assumption is 1.4 g/cm^3 (11.7 lb/gal) with a water content of 55%.

8.7.3 Salt Cake Description

Salt cake is the concentrate remaining after the supernatant is evaporated to reduce waste volume. Its composition is similar to supernatant, containing large quantities of nitrate and nitrite salts. Salt cake also contains ^{137}Cs, which is highly soluble in supernatant. Average density and water content are 1.9 g/cm^3 (15.8 lb/gal) and 6.4%, respectively.

8.7.4 High-Priority Waste Tank Safety Issues

There are no high-priority waste tank safety issues at the SRS. The HLW at SRS has a high heat output (over twice that for Hanford high-heat tanks), but the SRS USTs were designed to handle the heat load. The tanks are equipped with cooling coils and the primary liner was stressed received before entering service. The heat outputs for the SRS tanks are listed in Table E-1.

8.8 WASTE CHARACTERIZATION CAPABILITIES

This section describes the methods used to characterize the UST waste at the SRS.

8.8.1 Waste Tank Inspection

Special equipment has been developed at SRS to allow visual and photographic inspection of the tank interiors, including the annular spaces. The techniques used are as follows:

- Periscopic--visual and photographic
- Direct photography
- Direct wide-angle photography
- Closed-circuit television.

These techniques are normally used for tank inspection related to waste storage to help ensure tank integrity. Visual inspection can be made of both the primary vessel and of the annulus (Street 1989).

8.8.2 Waste Characterization

Supernatant characterization has been a part of the concentration process. All samples were analyzed in Westinghouse Savannah River Company hot cells. Sludge samples have been analyzed as part of the Tank 16 cleanup. However, there is no extensive schedule for waste characterization because the waste was generated from only one PUREX and recovery process, and process waste streams have already been characterized.

8.9 UNDERGROUND STORAGE TANK WASTE CHEMICAL CHARACTERISTICS

The SRS UST process waste consists primarily of sodium nitrate and nitrite salts and insoluble metal oxides and hydroxides. The liquid supernatant and salt cake contain essentially all of sodium nitrate and nitrite and other sodium salts, such as sodium carbonate, sodium sulfate, and sodium hydroxide. The sludge contains various metal oxides and hydroxides, such as iron (III) hydroxide, aluminum hydroxide, mangese oxide, and chromium hydroxide. As can be seen, it is very similar to the waste stored in the Hanford Site SSTs. Table 8-4 shows the typical chemical composition for SRS HLW.

Table 8-4. Savannah River High-Level Waste Compositions.

Liquid		Sludge		Salt cake	
Component	wt%	Component	wt%	Component	wt%
Ag	Trace	$Fe(OH)_3$	11.8	$NaNO_3$	65.4
Hg	Trace	MnO_2	2.0	$NaNO_2$	0.9
Pb	Trace	$UO_2(OH)_2$	1.3	NaOH	3.4
U	Trace	$Al(OH)_3$	13.7	$NaAl(OH)_4$	7.8
F^-	0.003	AlO(OH)	5.2	Na_2CO_3	2.7
Fe	Trace	$CaCO_3$	1.5	Na_2SO_4	9.4
Cl^-	0.023	$CaSO_4$	0.2	Na_3PO_4	Trace
OH^-	1.63	CaC_2O_4	0.2	NaF	0.2
NO_2^-	1.10	$Ni(OH)_2$	0.8	$Na_2C_2O_4$	0.1
NO_3^-	9.63	HgO	0.4	Insolubles	3.7
$Al(OH)_4^-$	4.54	SiO_2	0.2	H_2O	6.4
CO_3^{-2}	0.72	ThO_2	1.8		
CrO_4^{-2}	0.014	$Ce(OH)_3$	0.2		
SO_4^{-2}	0.22	$ZrO(OH)_2$	0.2		
PO_4^{-3}	0.12	$Cr(OH)_3$	0.2		
NH_4^+	Trace	$Mg(OH)_2$	0.2		
Na^+	11.0	$NaNO_3$	1.1		
H_2O	71.0	NaOH	1.3		
		Zeolite	1.5		
		Others	1.2		
		H_2O	55.0		
Total	100.0%		100.0%		100.0%
Density (g/cm^3)	1.1		1.4		1.9

Source: ORNL 1991.

Given chemical compositions and the tank waste volumes listed in Table 8-3, Table 8-5 was produced. A tank-by-tank listing is found in Table E-2.

Table 8-5. Estimated Savannah River Tank Chemical Mass Totals.

Component	Mass		Percent
	kg	lb	
CO_3^{-2}	2,256,000	4,974,000	1.2
Cl^-	14,700	32,400	0.0
F^-	96,980	213,800	0.1
OH^-	9,384,000	20,700,000	4.9
NO_3^-	56,560,000	124,700,000	29.8
NO_2^-	1,341,000	2,957,000	0.7
PO_4^{-3}	77,520	170,900	0.0
SO_4^{-2}	6,858,000	15,130,000	3.6
Al	4,154,000	9,157,000	2.2
Ca	147,500	325,100	0.1
Cr	29,440	64,900	0.0
Fe	1,257,000	2,771,000	0.7
Mg	16,830	37,100	0.0
Ni	103,100	227,200	0.1
Si	18,960	41,800	0.0
Na	32,250,000	71,120,000	17.0
Others	11,770,000	25,950,000	6.2
H_2O	63,780,000	140,600,000	33.5
Totals	190,115,030	419,172,200	100.1

8.10 UNDERGROUND STORAGE TANK RADIOLOGICAL CHARACTERISTICS

The primary radionuclides contained within the SRS waste are the fission products ^{137}Cs and ^{90}Sr and their decay products. The waste also contains quantities of TRU isotopes such as plutonium and uranium. The waste activities range from 1.5 Ci/L (5.7 Ci/gal) for supernatant and 2.7 Ci/L (10.3 Ci/gal) for salt cake, to 21.6 Ci/L (81.8 Ci/gal) for sludge. The sludge has a high activity because of the large concentrations of insoluble ^{90}Sr and precipitated ^{137}Cs. Table 8-6 shows the estimated radionuclide content for all of the HLW tanks (Fish 1991). A tank-by-tank listing is shown in Table E-3.

8.11 FACILITIES FOR PROCESSING RETRIEVED TANK WASTE

The DWPF is a major construction effort currently underway at the SRS. The facility will be the nation's first HLW vitrification plant. The DWPF will accept HLW currently stored in waste tanks in the F and H Areas, mix it with borosilicate glass, heat the mixture until it is molten, and then pour the material into stainless steel containers. As the mixture cools, it becomes a solid

Table 8-6. Estimated Savannah River Tank Radionuclide Content.

Radionuclide	Activity	Mass	
	(Ci)	(kg)	(lb)
^{239}Pu	2,570.0	42.0	92.0
^{238}U	57.0	168,700	372,000.0
^{235}U	2.4	1,129	2,490.0
^{147}Pm	25,420,000	26.2	58.0
^{144}Ce	2,786,000	0.9	1.9
^{137}Cs	131,400,000	1,518	3,347.0
^{90}Sr	126,800,000	920	2,028.0
^{90}Y	126,800,000	0.2	0.5
Others	124,700,000	21	46.0
Totals	537,908,629.4	172,357.3	380,063.4

glass form that is considered suitable for storage in an offsite geologic repository. The geologic repository will effectively isolate the nuclear waste from the environment. The scheduled date for operation of the DWPF is 1992.

The SRS has emptied four of their USTs, three Type Cs and one Type B. This was accomplished using long-shaft centrifical pumps to slurry the waste. The removed waste was transferred to Type D tanks for storage. Recycled supernatant was used to slurry the tank sludge and salt cake. The Type B tank (Tank 16) was also cleaned in 1979 and 1980 using dilute oxalic acid solutions followed by clean water rinses. Radionuclide inventories within the tank were reduced from approximately 100,000 to 4,100 Ci. No additional tanks can be emptied or cleaned because of a lack of Type D tank space.

Figure 8-12 outlines the present and future waste operations and treatment.

8.12 SOIL AND GROUNDWATER CONTAMINATION

From 1961 to 1962, following leakage from Tanks 9, 10, 14, and 16, roughly 134 (Tank 16) and 25 (Tank 14) leak sites were observed by periscope on the primary tank walls, as defined by accumulation of dried salt. No leak sites were visible during limited inspections of Tanks 9 and 10, even though these two tanks, like Tanks 14 and 16, contain appreciable amounts of dried waste in the annular spaces. Up to the present time, five of the Type A tanks (Tanks 1, 9, 10, 11, and 12) and all four of the Type B tanks (Tanks 13, 14, 15, and 16) have experienced some leakage from the primary tank to the annular space inside the secondary liner.

Tank 16 is the only SRS waste tank from which leakage through cracks in the primary tank has actually reached the ground surrounding the tank. The tank began receiving fresh high-heat waste from enriched uranium processing in

Figure 8-12. Treatment Operations for Savannah River High-Level Waste.

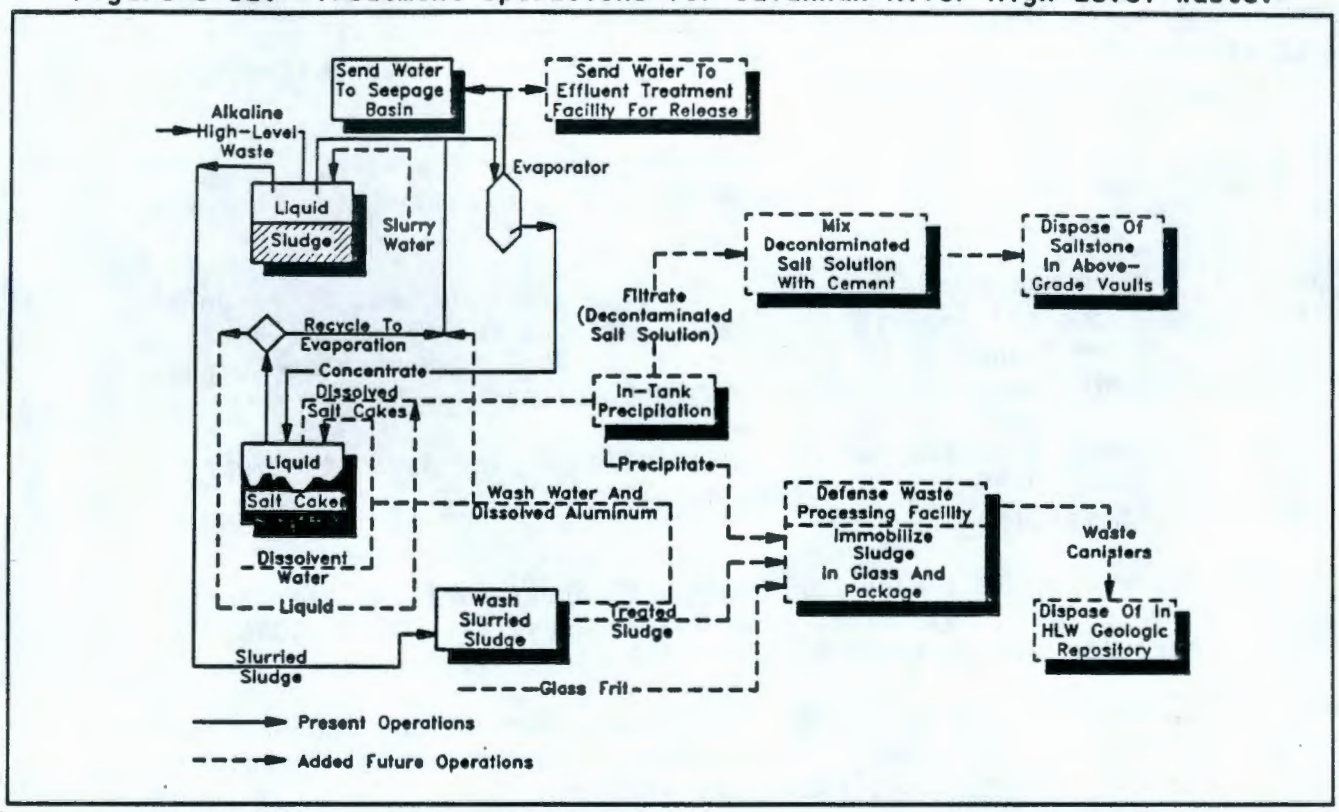

late May 1959. Subsequently, during September 1960, a large number of very small leaks resulting in a leak rate of about 15.1 L/min (4 gal/min), and the level of waste in the annular space exceeded the 1.5-m (5-ft) height of the steel pan for an estimated period of 6 h while a transfer jet was being installed in the annulus to remove the leaked waste.

A maximum of 2.65 m^3 (700 gal) of alkaline waste rose above the top of the secondary pan. Intensive inspection and monitoring over the intervening years confirmed that most of this 2.65 m^3 (700 gal) was contained in the concrete containment wall, and only a few tens of gallons of waste containing approximately 7 Ci/L (primarily ^{137}Cs) was actually leaked to the surrounding soil. Because of the high water table, this leaked waste immediately reached the groundwater. The soil in this area contains clay with a significant ion exchange capacity, consequently during the ensuing years, the radioactivity has migrated only a few feet (DOE-SR 1089).

8.13 REFERENCES

ASME, 1986, *Boiler and Pressure Vessel Code*, ASME Section VIII, Pressure Vessels, American Society of Mechanical Engineers, New York, New York.

Davis, H. A., D. K. Martin, and J. L. Todd, 1989, *Savannah River Site Environmental Report for 1988 (U)*, WSRC-RP-89-59-1, Volumes 1 and 2, Westinghouse Savannah River Company, Aiken, South Carolina.

DOE-SR, 1989, *Savannah River Waste Management Program Plan - FY 1990*, DOE/SR-WM-90-1, U.S. Department of Energy, Savannah River Operations Office, Aiken, South Carolina.

Fish, D. L., 1991, *Waste Management Technology Monthly Report (U) November 1991*, WSRC-RP-91-78-11B, Westinghouse Savannah River Company, Aiken, South Carolina.

Gordon, D. E., C. M. King, B. B. Looney, D. E. Stephenson, and W. F. Johnson, 1987, *Environmental Analysis of Closure Options for Waste Sites at the Savannah River Plant*, DP-MS-87-78, E. I. du Pont de Nemours & Company, Savannah River Laboratory, Aiken, South Carolina.

Hunter, C. H., 1990, *A Climatological Description of the Savannah River Site (U)*, WSRC-RP-89-313, Westinghouse Savannah River Company, Aiken, South Carolina.

ORNL, 1991, *Integrated Data Base for 1991: U.S. Spent Fuel and Radioactive Waste Inventories, Projections, and Characteristics*, DOE/RW-0006, Rev. 7, Martin Marietta Energy Systems, Inc., Oak Ridge, Tennessee.

Street, G. H., and F. G. McNatt, 1991, "SRS Waste Removal and D&D Program for Underground Waste Tanks (U)," *Proceedings of Environmental Remediation 1991*, September 8-11, 1991, Pasco, Washington.

APPENDIX A

HANFORD SITE TANK DATA

APPENDIX LEGENDS

Containment Legend

- Tank
  - Single Steel Shell (SSS)
  - Double Steel Shell (DSS)
  - Concrete (C)
  - Rubber Lined (RL)
  - Glass Lined (GL)
- Vault
  - Octagonal (O)
  - Pillar and Panel (P&P)
  - Partitioned Square (P)
  - Concrete (C)
  - Steel Liner (SL)

Construction Materials Legend

- Carbon Steel (CS)
- Stainless Steel (SS)
  - 347 (SS1)
  - 304L (SS2)
- Reinforced Concrete/Cement (RC)
- Rubber (R)
- Glass (Gl)

Radioactive Isotopes Half Lives

- ^{239}Pu 24,400 years
- ^{238}Pu 86 years
- ^{238}U 4.51×10^9 years
- ^{235}U 7.1×10^8 years
- ^{234}U 2.47×10^5 years
- ^{233}U 1.62×10^5 years
- ^{230}Th 8.0×10^4 years
- ^{226}Ra 1,600 years
- ^{210}Pb 21 years
- ^{147}Pm 2.5 years
- ^{144}Ce 284.9 days
- ^{137}Ba 2.55 minutes
- ^{137}Cs 30.23 years
- ^{90}Sr 28.1 years
- ^{90}Y 64 hours

Table A-1. Hanford Site Underground Storage Tank Physical Characteristics. (sheet 1 of 3)

Assumed Densities	
	13.3 lb/gal for Liquid
	14.3 lb/gal for Sludge
	11.7 lb/gal for Salt Cake
	10.8 lb/gal for Slurry

Tank	Underground Storage Tank Description: Type	Status	Location	Containment: Tank	Containment: Vault	Service	Construction Material: Tank	Construction Material: Vault	Cooling Coils	Operating Capacity (gal)	Underground Storage Tank Waste Description (As of March 1992): Total Waste (gal)	Total Waste (lb)	% of Operating Capacity	Liquid (gal)	Liquid (lb)	Sludge (gal)	Sludge (lb)	Salt Cake (gal)	Salt Cake (lb)	Slurry (gal)	Slurry (lb)	Powder (gal)	Powder (lb)	Temp. (F)	Estimated Leakage (gal)	Estimated Leakage (Ci)	Heat Output (Btu/hr)	Heat Output (Btu/hr per ton)	Remarks
Totals =>										125,524,000	60,901,089	772,770,000	49%	20,302,000	270,576,000	14,328,089	197,522,000	24,231,000	282,581,000	2,040,000	22,091,000				902,750	1,147,290	871,500	38.3	
A - 101	D2	Inactive	200-East	SSS		1955 to 1980	CS/RC		No	1,000,000	953,000	11,121,000	95%			3,000	42,000	950,000	11,079,000					155					Hydrogen gas accumulation
A - 102	D2	Inactive	200-East	SSS		1955 to 1980	CS/RC		No	1,000,000	41,000	522,000	4%	4,000	53,000	15,000	212,000	22,000	257,000										
A - 103	D2	Inactive	200-East	SSS		1955 to 1980	CS/RC		No	1,000,000	370,000	5,236,000	37%	4,000	53,000	366,000	5,183,000								5,500				
A - 104	D2	Inactive	200-East	SSS		1955 to 1975	CS/RC		No	1,000,000	28,000	397,000	3%			28,000	397,000							188	2,500		50,000	250	
A - 105	D2	Inactive	200-East	SSS		1955 to 1963	CS/RC		No	1,000,000	19,000	269,000	2%			19,000	269,000							133	277,000	760,000	50,000	370	
A - 106	D2	Inactive	200-East	SSS		1955 to 1980	CS/RC		No	1,000,000	125,000	1,770,000	13%			125,000	1,770,000												
AN - 101	E2	Active	200-East	DSS		1981	CS/RC		No	1,140,000	632,000	8,423,000	55%	632,000	8,423,000														
AN - 102	E2	Active	200-East	DSS		1981	CS/RC		No	1,140,000	1,003,089	13,457,000	88%	1,003,000	13,368,000	89	89,000												
AN - 103	E2	Active	200-East	DSS		1981	CS/RC		No	1,140,000	952,000	10,347,000	84%	15,000	200,000					937,000	10,147,000			112					Hydrogen gas accumulation
AN - 104	E2	Active	200-East	DSS		1981	CS/RC		No	1,140,000	1,063,000	10,913,000	93%	799,000	10,649,000	264,000	264,000							116					Hydrogen gas accumulation
AN - 105	E2	Active	200-East	DSS		1981	CS/RC		No	1,140,000	1,131,000	15,074,000	99%	1,131,000	15,074,000									106					Hydrogen gas accumulation
AN - 106	E2	Active	200-East	DSS		1981	CS/RC		No	1,140,000	1,015,000	13,318,000	89%	998,000	13,301,000	17,000	17,000												
AN - 107	E2	Active	200-East	DSS		1981	CS/RC		No	1,140,000	1,073,000	12,649,000	94%	939,000	12,515,000	134,000	134,000												
AP - 101	E2	Active	200-East	DSS		1986	CS/RC		No	1,140,000	1,062,000	14,154,000	93%	1,062,000	14,154,000														
AP - 102	E2	Active	200-East	DSS		1986	CS/RC		No	1,140,000	133,000	1,773,000	12%	133,000	1,773,000														
AP - 103	E2	Active	200-East	DSS		1986	CS/RC		No	1,140,000	1,134,000	15,114,000	99%	1,134,000	15,114,000														
AP - 104	E2	Active	200-East	DSS		1986	CS/RC		No	1,140,000	20,000	267,000	2%	20,000	267,000														
AP - 105	E2	Active	200-East	DSS		1986	CS/RC		No	1,140,000	824,000	10,982,000	72%	824,000	10,982,000														
AP - 106	E2	Active	200-East	DSS		1986	CS/RC		No	1,140,000	1,132,000	15,087,000	99%	1,132,000	15,087,000														
AP - 107	E2	Active	200-East	DSS		1986	CS/RC		No	1,140,000	1,123,000	14,967,000	99%	1,123,000	14,967,000														
AP - 108	E2	Active	200-East	DSS		1986	CS/RC		No	1,140,000	892,000	11,889,000	78%	892,000	11,889,000														
AW - 101	E2	Active	200-East	DSS		1980	CS/RC		No	1,140,000	1,124,000	15,051,000	99%	1,040,000	13,861,000	84,000	1,190,000												
AW - 102	E2	Active	200-East	DSS		1980	CS/RC		No	1,140,000	1,037,000	13,822,000	91%	1,036,000	13,808,000	1,000	14,000												
AW - 103	E2	Active	200-East	DSS		1980	CS/RC		No	1,140,000	646,000	8,912,000	57%	283,000	3,772,000	363,000	5,140,000												
AW - 104	E2	Active	200-East	DSS		1980	CS/RC		No	1,140,000	1,124,000	14,945,000	99%	834,000	11,116,000	179,000	2,535,000	111,000	1,294,000										
AW - 105	E2	Active	200-East	DSS		1980	CS/RC		No	1,140,000	899,000	12,229,000	79%	602,000	8,023,000	297,000	4,206,000												
AW - 106	E2	Active	200-East	DSS		1980	CS/RC		No	1,140,000	526,000	7,044,000	46%	230,000	3,065,000	211,000	2,988,000	85,000	991,000										
AX - 101	D3	Inactive	200-East	SSS		1964 to 1980	CS/RC		No	1,000,000	748,000	8,730,000	75%			3,000	42,000	745,000	8,688,000					141					Hydrogen gas accumulation
AX - 102	D3	Inactive	200-East	SSS		1964 to 1980	CS/RC		No	1,000,000	39,000	477,000	4%	3,000	40,000	7,000	99,000	29,000	338,000						3,000				
AX - 103	D3	Inactive	200-East	SSS		1964 to 1980	CS/RC		No	1,000,000	112,000	1,311,000	11%			2,000	28,000	110,000	1,283,000					118					Hydrogen gas accumulation
AX - 104	D3	Inactive	200-East	SSS		1964 to 1978	CS/RC		No	1,000,000	7,000	99,000	1%			7,000	99,000												
AY - 101	E1	Active	200-East	DSS		1970	CS/RC		No	980,000	938,000	12,570,000	96%	855,000	11,395,000	83,000	1,175,000												
AY - 102	E1	Active	200-East	DSS		1970	CS/RC		No	980,000	424,000	5,678,000	43%	392,000	5,225,000	32,000	453,000												
AZ - 101	E1	Active	200-East	DSS		1977	CS/RC		No	980,000	941,000	12,571,000	96%	906,000	12,075,000	35,000	496,000												
AZ - 102	E1	Active	200-East	DSS		1977	CS/RC		No	980,000	964,000	12,924,000	98%	873,000	11,635,000	91,000	1,289,000												
B - 101	A	Inactive	200-East	SSS		1944 to 1974	CS/RC		No	533,000	113,000	1,600,000	21%			113,000	1,600,000												
B - 102	A	Inactive	200-East	SSS		1944 to 1978	CS/RC		No	533,000	32,000	425,000	6%	4,000	53,000	18,000	255,000	10,000	117,000										
B - 103	A	Inactive	200-East	SSS		1944 to 1977	CS/RC		No	533,000	59,000	835,000	11%			59,000	835,000							68					Organic Salts
B - 104	A	Inactive	200-East	SSS		1944 to 1972	CS/RC		No	533,000	371,000	5,080,000	70%	1,000	13,000	301,000	4,262,000	69,000	805,000										
B - 105	A	Inactive	200-East	SSS		1944 to 1972	CS/RC		No	533,000	306,000	3,668,000	57%			40,000	566,000	266,000	3,102,000										
B - 106	A	Inactive	200-East	SSS		1944 to 1977	CS/RC		No	533,000	117,000	1,656,000	22%	1,000	13,000	116,000	1,643,000												
B - 107	A	Inactive	200-East	SSS		1944 to 1969	CS/RC		No	533,000	165,000	2,335,000	31%	1,000	13,000	164,000	2,322,000								8,000				
B - 108	A	Inactive	200-East	SSS		1944 to 1977	CS/RC		No	533,000	94,000	1,331,000	18%			94,000	1,331,000								10,000				
B - 109	A	Inactive	200-East	SSS		1944 to 1977	CS/RC		No	533,000	127,000	1,798,000	24%			127,000	1,798,000												
B - 110	A	Inactive	200-East	SSS		1944 to 1971	CS/RC		No	533,000	246,000	3,482,000	46%	1,000	13,000	245,000	3,469,000												
B - 111	A	Inactive	200-East	SSS		1944 to 1976	CS/RC		No	533,000	237,000	3,355,000	44%	1,000	13,000	236,000	3,342,000												
B - 112	A	Inactive	200-East	SSS		1944 to 1977	CS/RC		No	533,000	33,000	465,000	6%	3,000	40,000	30,000	425,000								2,000				
B - 201	B	Inactive	200-East	SSS		1944 to 1971	CS/RC		No	55,000	29,000	410,000	53%	1,000	13,000	28,000	397,000								1,200				
B - 202	B	Inactive	200-East	SSS		1944 to 1977	CS/RC		No	55,000	27,000	382,000	49%			27,000	382,000												
B - 203	B	Inactive	200-East	SSS		1944 to 1977	CS/RC		No	55,000	51,000	721,000	93%	1,000	13,000	50,000	708,000								300				
B - 204	B	Inactive	200-East	SSS		1944 to 1977	CS/RC		No	55,000	50,000	707,000	91%	1,000	13,000	49,000	694,000								400				
BX - 101	A	Inactive	200-East	SSS		1947 to 1972	CS/RC		No	533,000	43,000	608,000	8%	1,000	13,000	42,000	595,000												
BX - 102	A	Inactive	200-East	SSS		1947 to 1971	CS/RC		No	533,000	96,000	1,359,000	18%			96,000	1,359,000							71	70,000	50,000	5,000	10	Contains ferrocyanide
BX - 103	A	Inactive	200-East	SSS		1947 to 1977	CS/RC		No	533,000	66,000	931,000	12%	4,000	53,000	62,000	878,000												
BX - 104	A	Inactive	200-East	SSS		1947 to 1980	CS/RC		No	533,000	99,000	1,399,000	19%	3,000	40,000	96,000	1,359,000												
BX - 105	A	Inactive	200-East	SSS		1947 to 1980	CS/RC		No	533,000	51,000	711,000	10%	5,000	67,000	43,000	609,000	3,000	35,000										
BX - 106	A	Inactive	200-East	SSS		1947 to 1971	CS/RC		No	533,000	46,000	639,000	9%	15,000	200,000	31,000	439,000							69			5,000	20	Contains ferrocyanide
BX - 107	A	Inactive	200-East	SSS		1947 to 1977	CS/RC		No	533,000	345,000	4,884,000	65%	1,000	13,000	344,000	4,871,000												
BX - 108	A	Inactive	200-East	SSS		1947 to 1974	CS/RC		No	533,000	26,000	368,000	5%			26,000	368,000								2,500	500			
BX - 109	A	Inactive	200-East	SSS		1947 to 1974	CS/RC		No	533,000	193,000	2,733,000	36%			193,000	2,733,000												
BX - 110	A	Inactive	200-East	SSS		1947 to 1977	CS/RC		No	533,000	199,000	2,794,000	37%	1,000	13,000	189,000	2,676,000	9,000	105,000					68			5,000		Contains ferrocyanide
BX - 111	A	Inactive	200-East	SSS		1947 to 1977	CS/RC		No	533,000	230,000	2,884,000	43%	19,000	253,000	68,000	963,000	143,000	1,668,000					73			5,000		Contains ferrocyanide
BX - 112	A	Inactive	200-East	SSS		1947 to 1977	CS/RC		No	533,000	165,000	2,335,000	31%	1,000	13,000	164,000	2,322,000												

Table A-1. Hanford Site Underground Storage Tank Physical Characteristics. (sheet 2 of 3)

Assumed Densities	
	13.3 lb/gal for Liquid
	14.2 lb/gal for Sludge
	11.7 lb/gal for Salt Cake
	10.8 lb/gal for Slurry

Tank	Underground Storage Tank Description: Type	Status	Location	Containment: Tank	Containment: Vault	Service	Construction Material: Tank	Construction Material: Vault	Cooling Coils	Operating Capacity (gal)	Underground Storage Tank Waste Description (As of March 1992): Total Waste (gal)	Total Waste (lb)	% of Operating Capacity	Liquid (gal)	Liquid (lb)	Sludge (gal)	Sludge (lb)	Salt Cake (gal)	Salt Cake (lb)	Slurry (gal)	Slurry (lb)	Powder (gal)	Powder (lb)	Temp. (F)	Estimated Leakage (gal)	Estimated Leakage (Ci)	Heat Output (Btu/hr)	Heat Output (Btu/hr per ton)	Remarks
Totals =>										125,524,000	68,901,089	772,779,000	49%	20,392,000	270,576,000	14,328,089	197,522,000	24,231,000	282,581,000	2,040,000	22,091,000				992,750	1,147,290	871,500	38.3	
BY - 101	C	Inactive	200-East	SSS		1949 to 1971	CS/RC		No	758,000	387,000	4,786,000	51%			109,000	1,544,000	278,000	3,242,000					74			8,200		Contains ferrocyanide
BY - 102	C	Inactive	200-East	SSS		1949 to 1977	CS/RC		No	758,000	341,000	3,977,000	45%					341,000	3,977,000										
BY - 103	C	Inactive	200-East	SSS		1949 to 1973	CS/RC		No	758,000	400,000	4,677,000	53%			5,000	71,000	395,000	4,606,000					81	5,000		8,600		Contains ferrocyanide
BY - 104	C	Inactive	200-East	SSS		1949 to 1977	CS/RC		No	758,000	406,000	4,834,000	54%			40,000	566,000	366,000	4,268,000					130			17,000	10	Contains ferrocyanide
BY - 105	C	Inactive	200-East	SSS		1949 to 1974	CS/RC		No	758,000	503,000	5,976,000	66%			44,000	623,000	459,000	5,353,000					114			37,700	2	Contains ferrocyanide
BY - 106	C	Inactive	200-East	SSS		1949 to 1977	CS/RC		No	758,000	642,000	7,724,000	85%			95,000	1,345,000	547,000	6,379,000					131			12,200		Contains ferrocyanide
BY - 107	C	Inactive	200-East	SSS		1949 to 1974	CS/RC		No	758,000	266,000	3,252,000	35%			60,000	850,000	206,000	2,402,000					83	15,100		14,500	10	Contains ferrocyanide
BY - 108	C	Inactive	200-East	SSS		1949 to 1972	CS/RC		No	758,000	228,000	3,044,000	30%			154,000	2,181,000	74,000	863,000					101	5,000		23,000	20	Contains ferrocyanide
BY - 109	C	Inactive	200-East	SSS		1949 to 1979	CS/RC		No	758,000	423,000	5,140,000	56%			83,000	1,175,000	340,000	3,965,000										
BY - 110	C	Inactive	200-East	SSS		1949 to 1979	CS/RC		No	758,000	398,000	4,899,000	53%			103,000	1,459,000	295,000	3,440,000					124			25,200	10	Contains ferrocyanide
BY - 111	C	Inactive	200-East	SSS		1949 to 1977	CS/RC		No	758,000	459,000	5,405,000	61%			21,000	297,000	438,000	5,108,000					92			34,200	10	Contains ferrocyanide
BY - 112	C	Inactive	200-East	SSS		1949 to 1978	CS/RC		No	758,000	291,000	3,406,000	38%			5,000	71,000	286,000	3,335,000					85			5,000		Contains ferrocyanide
C - 101	A	Inactive	200-East	SSS		1944 to 1970	CS/RC		No	533,000	88,000	1,246,000	17%			88,000	1,246,000								20,000				
C - 102	A	Inactive	200-East	SSS		1944 to 1976	CS/RC		No	533,000	423,000	5,990,000	79%			423,000	5,990,000												
C - 103	A	Inactive	200-East	SSS		1944 to 1979	CS/RC		No	533,000	195,000	2,651,000	37%	133,000	1,773,000	62,000	878,000							124					Contains organic salts
C - 104	A	Inactive	200-East	SSS		1944 to 1980	CS/RC		No	533,000	295,000	4,177,000	55%			295,000	4,177,000												
C - 105	A	Inactive	200-East	SSS		1944 to 1979	CS/RC		No	533,000	150,000	2,124,000	28%			150,000	2,124,000							99			42,000	40	
C - 106	A	Inactive	200-East	SSS		1944 to 1979	CS/RC		No	533,000	229,000	3,216,000	43%	32,000	426,000	197,000	2,790,000							165			150,000	90	High heat load
C - 107	A	Inactive	200-East	SSS		1944 to 1978	CS/RC		No	533,000	275,000	3,894,000	52%			275,000	3,894,000												
C - 108	A	Inactive	200-East	SSS		1944 to 1976	CS/RC		No	533,000	66,000	935,000	12%			66,000	935,000							78			5,000	10	Contains ferrocyanide
C - 109	A	Inactive	200-East	SSS		1944 to 1976	CS/RC		No	533,000	66,000	931,000	12%	4,000	53,000	62,000	878,000							81			5,000	10	Contains ferrocyanide
C - 110	A	Inactive	200-East	SSS		1944 to 1976	CS/RC		No	533,000	192,000	2,715,000	36%	5,000	67,000	187,000	2,648,000								2,000				
C - 111	A	Inactive	200-East	SSS		1944 to 1978	CS/RC		No	533,000	57,000	807,000	11%			57,000	807,000							78	5,500		5,000	10	Contains ferrocyanide
C - 112	A	Inactive	200-East	SSS		1944 to 1976	CS/RC		No	533,000	104,000	1,473,000	20%			104,000	1,473,000							85			5,000	10	Contains ferrocyanide
C - 201	B	Inactive	200-East	SSS		1944 to 1977	CS/RC		No	55,000	2,000	28,000	4%			2,000	28,000								550				
C - 202	B	Inactive	200-East	SSS		1944 to 1977	CS/RC		No	55,000	1,000	14,000	2%			1,000	14,000								450				
C - 203	B	Inactive	200-East	SSS		1944 to 1977	CS/RC		No	55,000	5,000	71,000	9%			5,000	71,000								400				
C - 204	B	Inactive	200-East	SSS		1944 to 1977	CS/RC		No	55,000	3,000	42,000	5%			3,000	42,000								350				
S - 101	C	Inactive	200-West	SSS		1951 to 1980	CS/RC		No	758,000	427,000	5,609,000	56%	12,000	160,000	244,000	3,455,000	171,000	1,994,000										
S - 102	C	Inactive	200-West	SSS		1951 to 1980	CS/RC		No	758,000	549,000	6,413,000	72%			4,000	57,000	545,000	6,356,000					109					Contains organic salts; Hydrogen gas accumulation
S - 103	C	Inactive	200-West	SSS		1951 to 1980	CS/RC		No	758,000	248,000	2,946,000	33%	17,000	227,000	10,000	142,000	221,000	2,577,000										
S - 104	C	Inactive	200-West	SSS		1951 to 1968	CS/RC		No	758,000	294,000	4,162,000	39%	1,000	13,000	293,000	4,149,000								34,000				
S - 105	C	Inactive	200-West	SSS		1951 to 1974	CS/RC		No	758,000	456,000	5,323,000	60%			2,000	28,000	454,000	5,295,000										
S - 106	C	Inactive	200-West	SSS		1951 to 1979	CS/RC		No	758,000	543,000	6,412,000	72%			32,000	453,000	511,000	5,959,000										
S - 107	C	Inactive	200-West	SSS		1951 to 1980	CS/RC		No	758,000	368,000	5,034,000	49%	6,000	80,000	293,000	4,149,000	69,000	805,000										
S - 108	C	Inactive	200-West	SSS		1951 to 1979	CS/RC		No	758,000	604,000	7,054,000	80%			4,000	57,000	600,000	6,997,000										
S - 109	C	Inactive	200-West	SSS		1951 to 1979	CS/RC		No	758,000	568,000	6,656,000	75%			13,000	184,000	555,000	6,472,000										
S - 110	C	Inactive	200-West	SSS		1951 to 1979	CS/RC		No	758,000	692,000	8,397,000	91%			131,000	1,855,000	561,000	6,542,000										
S - 111	C	Inactive	200-West	SSS		1951 to 1972	CS/RC		No	758,000	596,000	7,314,000	79%	10,000	133,000	139,000	1,968,000	447,000	5,213,000					93					Hydrogen gas accumulation
S - 112	C	Inactive	200-West	SSS		1951 to 1974	CS/RC		No	758,000	637,000	7,444,000	84%			6,000	85,000	631,000	7,359,000					90					Hydrogen gas accumulation
SX - 101	D1	Inactive	200-West	SSS		1954 to 1980	CS/RC		No	1,000,000	456,000	5,599,000	46%	1,000	13,000	112,000	1,586,000	343,000	4,000,000					140					Hydrogen gas accumulation
SX - 102	D1	Inactive	200-West	SSS		1954 to 1980	CS/RC		No	1,000,000	543,000	6,625,000	54%			117,000	1,657,000	426,000	4,968,000					155					Hydrogen gas accumulation
SX - 103	D1	Inactive	200-West	SSS		1954 to 1980	CS/RC		No	1,000,000	652,000	7,893,000	65%	1,000	13,000	115,000	1,629,000	536,000	6,251,000					180					Hydrogen gas accumulation
SX - 104	D1	Inactive	200-West	SSS		1954 to 1980	CS/RC		No	1,000,000	614,000	7,500,000	61%			136,000	1,926,000	478,000	5,574,000					174	6,000				Hydrogen gas accumulation
SX - 105	D1	Inactive	200-West	SSS		1954 to 1980	CS/RC		No	1,000,000	683,000	8,148,000	68%			73,000	1,034,000	610,000	7,114,000					186					Hydrogen gas accumulation
SX - 106	D1	Inactive	200-West	SSS		1954 to 1980	CS/RC		No	1,000,000	538,000	6,406,000	54%	61,000	813,000	12,000	170,000	465,000	5,423,000					107					Hydrogen gas accumulation; Organic salts
SX - 107	D1	Inactive	200-West	SSS		1954 to 1964	CS/RC		No	1,000,000	104,000	1,473,000	10%			104,000	1,473,000							171	5,000		42,000	60	
SX - 108	D1	Inactive	200-West	SSS		1954 to 1962	CS/RC		No	1,000,000	115,000	1,629,000	12%			115,000	1,629,000							194	35,000	140,000	45,000	60	
SX - 109	D1	Inactive	200-West	SSS		1954 to 1963	CS/RC		No	1,000,000	250,000	3,540,000	25%			250,000	3,540,000							151	10,000	40,000	50,000	30	Potential hydrogen gas accumulation
SX - 110	D1	Inactive	200-West	SSS		1954 to 1976	CS/RC		No	1,000,000	62,000	878,000	6%			62,000	878,000							178	5,500		42,000	100	
SX - 111	D1	Inactive	200-West	SSS		1954 to 1974	CS/RC		No	1,000,000	125,000	1,770,000	13%			125,000	1,770,000							192	2,000	2,000	44,000	50	
SX - 112	D1	Inactive	200-West	SSS		1954 to 1969	CS/RC		No	1,000,000	92,000	1,303,000	9%			92,000	1,303,000							161	30,000	40,000	43,000	70	
SX - 113	D1	Inactive	200-West	SSS		1954 to 1958	CS/RC		No	1,000,000	26,000	368,000	3%			26,000	368,000								15,000	8,000			
SX - 114	D1	Inactive	200-West	SSS		1954 to 1972	CS/RC		No	1,000,000	181,000	2,563,000	18%			181,000	2,563,000							188			58,000	50	
SX - 115	D1	Inactive	200-West	SSS		1954 to 1965	CS/RC		No	1,000,000	12,000	170,000	1%			12,000	170,000								50,000	40,000			
SY - 101	E2	Active	200-West	DSS		1976	CS/RC		No	1,140,000	1,119,000	12,637,000	98%	29,000	387,000			560,000	6,531,000	530,000	5,739,000			131					Hydrogen gas accumulation
SY - 102	E2	Active	200-West	DSS		1976	CS/RC		No	1,140,000	677,000	9,082,000	59%	606,000	8,077,000	71,000	1,005,000												
SY - 103	E2	Active	200-West	DSS		1976	CS/RC		No	1,140,000	747,000	8,518,000	66%	170,000	2,266,000			4,000	47,000	573,000	6,205,000			115					Hydrogen gas accumulation

Table A-1. Hanford Site Underground Storage Tank Physical Characteristics. (sheet 3 of 3)

Assumed Densities	
	13.3 lb/gal for Liquid
	14.2 lb/gal for Sludge
	11.7 lb/gal for Salt Cake
	10.8 lb/gal for Slurry

Tank	Underground Storage Tank Description: Type	Status	Location	Containment: Tank	Containment: Vault	Service	Construction Material: Tank	Construction Material: Vault	Cooling Coils	Operating Capacity (gal)	Underground Storage Tank Waste Description (As of March 1992): Total Waste (gal)	Total Waste (lb)	% of Operating Capacity	Liquid (gal)	Liquid (lb)	Sludge (gal)	Sludge (lb)	Salt Cake (gal)	Salt Cake (lb)	Slurry (gal)	Slurry (lb)	Powder (gal)	Powder (lb)	Temp. (F)	Estimated Leakage (gal)	Estimated Leakage (CI)	Heat Output (Btu/hr)	Heat Output (Btu/hr per ton)	Remarks
Totals =>										125,524,000	60,901,089	772,770,000	49%	28,302,000	278,576,000	14,328,089	197,522,000	24,231,000	282,581,000	2,040,000	22,091,000				902,750	1,147,290	871,500	38.3	
T - 101	A	Inactive	200-West	SSS		1944 to 1979	CS/RC		No	533,000	133,000	1,859,000	25%	30,000	400,000	103,000	1,459,000							73			5,000	10	Contains ferrocyanide
T - 102	A	Inactive	200-West	SSS		1944 to 1976	CS/RC		No	533,000	32,000	442,000	6%	13,000	173,000	19,000	269,000								1,000				
T - 103	A	Inactive	200-West	SSS		1944 to 1974	CS/RC		No	533,000	27,000	379,000	5%	4,000	53,000	23,000	326,000												
T - 104	A	Inactive	200-West	SSS		1944 to 1974	CS/RC		No	533,000	445,000	6,299,000	83%	3,000	40,000	442,000	6,259,000												
T - 105	A	Inactive	200-West	SSS		1944 to 1976	CS/RC		No	533,000	98,000	1,388,000	18%			98,000	1,388,000												
T - 106	A	Inactive	200-West	SSS		1944 to 1973	CS/RC		No	533,000	21,000	296,000	4%	2,000	27,000	19,000	269,000								115,000	40,000			
T - 107	A	Inactive	200-West	SSS		1944 to 1976	CS/RC		No	533,000	180,000	2,542,000	34%	9,000	120,000	171,000	2,422,000							74			5,000		Contains ferrocyanide
T - 108	A	Inactive	200-West	SSS		1944 to 1974	CS/RC		No	533,000	44,000	623,000	8%			44,000	623,000								1,000				
T - 109	A	Inactive	200-West	SSS		1944 to 1974	CS/RC		No	533,000	58,000	821,000	11%			58,000	821,000								1,000				
T - 110	A	Inactive	200-West	SSS		1944 to 1976	CS/RC		No	533,000	379,000	5,365,000	71%	3,000	40,000	376,000	5,325,000							69					Hydrogen gas accumulation
T - 111	A	Inactive	200-West	SSS		1944 to 1974	CS/RC		No	533,000	458,000	6,484,000	86%	2,000	27,000	456,000	6,457,000								1,000				
T - 112	A	Inactive	200-West	SSS		1944 to 1977	CS/RC		No	533,000	67,000	943,000	13%	7,000	93,000	60,000	850,000												
T - 201	B	Inactive	200-West	SSS		1944 to 1976	CS/RC		No	55,000	29,000	410,000	53%	1,000	13,000	28,000	397,000												
T - 202	B	Inactive	200-West	SSS		1944 to 1976	CS/RC		No	55,000	21,000	297,000	38%			21,000	297,000												
T - 203	B	Inactive	200-West	SSS		1944 to 1976	CS/RC		No	55,000	35,000	496,000	64%			35,000	496,000												
T - 204	B	Inactive	200-West	SSS		1944 to 1976	CS/RC		No	55,000	38,000	538,000	69%			38,000	538,000												
TX - 101	C	Inactive	200-West	SSS		1948 to 1980	CS/RC		No	758,000	87,000	1,230,000	11%	3,000	40,000	84,000	1,190,000												
TX - 102	C	Inactive	200-West	SSS		1948 to 1977	CS/RC		No	758,000	113,000	1,318,000	15%					113,000	1,318,000										
TX - 103	C	Inactive	200-West	SSS		1948 to 1980	CS/RC		No	758,000	157,000	2,223,000	21%			157,000	2,223,000												
TX - 104	C	Inactive	200-West	SSS		1948 to 1977	CS/RC		No	758,000	65,000	759,000	9%	1,000	13,000			64,000	746,000										
TX - 105	C	Inactive	200-West	SSS		1948 to 1977	CS/RC		No	758,000	609,000	7,102,000	80%					609,000	7,102,000					99					Contains organic salts
TX - 106	C	Inactive	200-West	SSS		1948 to 1977	CS/RC		No	758,000	453,000	5,283,000	60%					453,000	5,283,000										
TX - 107	C	Inactive	200-West	SSS		1948 to 1977	CS/RC		No	758,000	36,000	421,000	5%	1,000	13,000			35,000	408,000						2,500				
TX - 108	C	Inactive	200-West	SSS		1948 to 1977	CS/RC		No	758,000	134,000	1,563,000	18%					134,000	1,563,000										
TX - 109	C	Inactive	200-West	SSS		1948 to 1977	CS/RC		No	758,000	384,000	4,478,000	51%					384,000	4,478,000										
TX - 110	C	Inactive	200-West	SSS		1948 to 1977	CS/RC		No	758,000	462,000	5,388,000	61%					462,000	5,388,000										
TX - 111	C	Inactive	200-West	SSS		1948 to 1977	CS/RC		No	758,000	370,000	4,315,000	49%					370,000	4,315,000										
TX - 112	C	Inactive	200-West	SSS		1948 to 1974	CS/RC		No	758,000	649,000	7,569,000	86%					649,000	7,569,000										
TX - 113	C	Inactive	200-West	SSS		1948 to 1971	CS/RC		No	758,000	607,000	7,079,000	80%					607,000	7,079,000										
TX - 114	C	Inactive	200-West	SSS		1948 to 1971	CS/RC		No	758,000	535,000	6,239,000	71%					535,000	6,239,000										
TX - 115	C	Inactive	200-West	SSS		1948 to 1977	CS/RC		No	758,000	640,000	7,464,000	84%					640,000	7,464,000										
TX - 116	C	Inactive	200-West	SSS		1948 to 1969	CS/RC		No	758,000	631,000	7,359,000	83%					631,000	7,359,000										
TX - 117	C	Inactive	200-West	SSS		1948 to 1969	CS/RC		No	758,000	626,000	7,300,000	83%					626,000	7,300,000										
TX - 118	C	Inactive	200-West	SSS		1948 to 1980	CS/RC		No	758,000	347,000	4,047,000	46%					347,000	4,047,000					74			4,900		Contains organic salts
TY - 101	C	Inactive	200-West	SSS		1952 to 1973	CS/RC		No	758,000	118,000	1,671,000	16%			118,000	1,671,000							68	1,000		5,000	10	Contains ferrocyanide
TY - 102	C	Inactive	200-West	SSS		1952 to 1979	CS/RC		No	758,000	64,000	746,000	8%					64,000	746,000										
TY - 103	C	Inactive	200-West	SSS		1952 to 1973	CS/RC		No	758,000	162,000	2,294,000	21%			162,000	2,294,000							70	3,000	700	5,000		Contains ferrocyanide
TY - 104	C	Inactive	200-West	SSS		1952 to 1974	CS/RC		No	758,000	46,000	649,000	6%	3,000	40,000	43,000	609,000							71	1,400		5,000	20	Contains ferrocyanide
TY - 105	C	Inactive	200-West	SSS		1952 to 1980	CS/RC		No	758,000	231,000	3,271,000	30%			231,000	3,271,000								35,000	4,000			
TY - 106	C	Inactive	200-West	SSS		1952 to 1959	CS/RC		No	758,000	17,000	241,000	2%			17,000	241,000								20,000	2,000			
U - 101	A	Inactive	200-West	SSS		1944 to 1960	CS/RC		No	533,000	25,000	352,000	5%	3,000	40,000	22,000	312,000								30,000	20,000			
U - 102	A	Inactive	200-West	SSS		1944 to 1979	CS/RC		No	533,000	374,000	4,499,000	70%	18,000	240,000	43,000	609,000	313,000	3,650,000										
U - 103	A	Inactive	200-West	SSS		1944 to 1978	CS/RC		No	533,000	468,000	5,559,000	88%	13,000	173,000	32,000	453,000	423,000	4,933,000					90					Hydrogen gas accumulation
U - 104	A	Inactive	200-West	SSS		1944 to 1951	CS/RC		No	533,000	122,000	1,728,000	23%			122,000	1,728,000								55,000	90			
U - 105	A	Inactive	200-West	SSS		1944 to 1978	CS/RC		No	533,000	418,000	5,016,000	78%	37,000	493,000	32,000	453,000	349,000	4,070,000					92					Hydrogen gas accumulation
U - 106	A	Inactive	200-West	SSS		1944 to 1977	CS/RC		No	533,000	226,000	2,725,000	42%	15,000	200,000	26,000	368,000	185,000	2,157,000					85					Contains organic salts
U - 107	A	Inactive	200-West	SSS		1944 to 1980	CS/RC		No	533,000	406,000	4,823,000	76%	31,000	413,000	15,000	212,000	360,000	4,198,000					81					Contains organic salts
U - 108	A	Inactive	200-West	SSS		1944 to 1979	CS/RC		No	533,000	468,000	5,571,000	88%	24,000	320,000	29,000	411,000	415,000	4,840,000					90					Hydrogen gas accumulation
U - 109	A	Inactive	200-West	SSS		1944 to 1978	CS/RC		No	533,000	463,000	5,551,000	87%	19,000	253,000	43,000	680,000	396,000	4,618,000					88					Hydrogen gas accumulation
U - 110	A	Inactive	200-West	SSS		1944 to 1975	CS/RC		No	533,000	186,000	2,634,000	35%			186,000	2,634,000								8,100				
U - 111	A	Inactive	200-West	SSS		1944 to 1980	CS/RC		No	533,000	329,000	3,902,000	62%			26,000	368,000	303,000	3,534,000										
U - 112	A	Inactive	200-West	SSS		1944 to 1970	CS/RC		No	533,000	49,000	690,000	9%	4,000	53,000	45,000	637,000								8,500				
U - 201	B	Inactive	200-West	SSS		1944 to 1977	CS/RC		No	55,000	5,000	70,000	9%	1,000	13,000	4,000	57,000												
U - 202	B	Inactive	200-West	SSS		1944 to 1977	CS/RC		No	55,000	5,000	70,000	9%	1,000	13,000	4,000	57,000												
U - 203	B	Inactive	200-West	SSS		1944 to 1977	CS/RC		No	55,000	3,000	41,000	5%	1,000	13,000	2,000	28,000												
U - 204	B	Inactive	200-West	SSS		1944 to 1977	CS/RC		No	55,000	3,000	41,000	5%	1,000	13,000	2,000	28,000												

Table A-1.1. Hanford Site Underground Storage Tank Farm Physical Characteristics.

Assumed Densities	
	13.3 lb/gal for Liquid
	14.3 lb/gal for Sludge
	11.7 lb/gal for Salt Cake
	10.8 lb/gal for Slurry

Farm	Underground Storage Tank Farm Description: Type	Status	Location	Containment: Tank	Containment: Vault	Service	Construction Material: Tank	Construction Material: Vault	Cooling Coils	Operating Capacity (gal)	Underground Storage Tank Farm Waste Description: Total Waste (gal)	Total Waste (lb)	% of Operating Capacity	Liquid (gal)	Liquid (lb)	Sludge (gal)	Sludge (lb)	Salt Cake (gal)	Salt Cake (lb)	Slurry (gal)	Slurry (lb)	Powder		Temp. (Avg) (F)	Estimated Leakage (gal)	Estimated Leakage (Ci)	Heat Output (Btu/hr)	Heat Output (Btu/hr per tank)	Remarks
Totals =>										125,524,000	60,901,089	772,770,000	49%	20,302,000	270,576,000	14,328,089	197,522,000	24,231,000	282,581,000	2,040,000	22,091,000			113	902,750	1,147,290	871,500	53	
A	D2	Inactive	200-East	SSS		1953	CS/RC		No	6,000,000	1,536,000	19,315,000	26%	8,000	106,000	556,000	7,873,000	972,000	11,336,000					159	285,000	760,000	100,000	310	
AN	E2	Active	200-East	DSS		1981	CS/RC		No	7,980,000	6,869,089	84,181,000	86%	5,517,000	73,530,000	415,089	504,000			937,000	10,147,000			111					
AP	E2	Active	200-East	DSS		1986	CS/RC		No	9,120,000	6,320,000	84,233,000	69%	6,320,000	84,233,000														
AW	E2	Active	200-East	DSS		1980	CS/RC		No	6,840,000	5,356,000	72,003,000	78%	4,025,000	53,645,000	1,135,000	16,073,000	196,000	2,285,000										
AX	D3	Inactive	200-East	SSS		1964	CS/RC		No	4,000,000	906,000	10,617,000	23%	3,000	40,000	19,000	268,000	884,000	10,309,000					130	3,000				
AY	E1	Active	200-East	DSS		1970	CS/RC		No	1,960,000	1,362,000	18,248,000	69%	1,247,000	16,620,000	115,000	1,628,000												
AZ	E1	Active	200-East	DSS		1977	CS/RC		No	1,960,000	1,905,000	25,495,000	97%	1,779,000	23,710,000	126,000	1,785,000												
B	A&B	Inactive	200-East	SSS		1944	CS/RC		No	6,616,000	2,057,000	28,250,000	31%	15,000	197,000	1,697,000	24,029,000	345,000	4,024,000					68	21,900				
BX	A	Inactive	200-East	SSS		1947	CS/RC		No	6,396,000	1,559,000	21,645,000	24%	50,000	663,000	1,354,000	19,172,000	155,000	1,808,000					70	72,500	50,500	20,000	8	
BY	C	Inactive	200-East	SSS		1949	CS/RC		No	9,096,000	4,744,000	57,120,000	52%			719,000	10,182,000	4,025,000	46,938,000					102	25,100		185,600	6	
C	A&B	Inactive	200-East	SSS		1944	CS/RC		No	6,616,000	2,151,000	30,314,000	33%	174,000	2,319,000	1,977,000	27,995,000							101	29,250		212,000	28	
S	C	Inactive	200-West	SSS		1951	CS/RC		No	9,096,000	5,982,000	72,764,000	66%	46,000	613,000	1,171,000	16,582,000	4,765,000	55,569,000					97	24,000				
SX	D1	Inactive	200-West	SSS		1954	CS/RC		No	15,000,000	4,453,000	55,863,000	30%	63,000	839,000	1,532,000	21,696,000	2,858,000	33,330,000					167	158,500	270,000	324,000	60	
SY	E2	Active	200-West	DSS		1976	CS/RC		No	3,420,000	2,543,000	30,257,000	74%	805,000	10,730,000	71,000	1,005,000	564,000	6,578,000	1,103,000	11,944,000			123					
T	A&B	Inactive	200-West	SSS		1944	CS/RC		No	6,616,000	2,065,000	29,182,000	31%	74,000	986,000	1,991,000	28,196,000							72	119,000	40,000	10,000	5	
TX	C	Inactive	200-West	SSS		1948	CS/RC		No	13,644,000	6,905,000	81,137,000	51%	5,000	66,000	241,000	3,413,000	6,659,000	77,658,000					87	2,500		4,900		
TY	C	Inactive	200-West	SSS		1952	CS/RC		No	4,548,000	638,000	8,872,000	14%	3,000	40,000	571,000	8,086,000	64,000	746,000					70	60,400	6,700	15,000	10	
U	A&B	Inactive	200-West	SSS		1944	CS/RC		No	6,616,000	3,550,000	43,272,000	54%	168,000	2,237,000	638,000	9,035,000	2,744,000	32,000,000					88	101,600	20,090			

Table A-2. Hanford Site Underground Storage Tank Chemical Compositions (pounds). (sheet 1 of 3)

Tank	Total	Total (Dry)	H2O	pH	Organics	Anions CO3	Cl	F	OH	NO3	NO2	PO4	SO4	Cations Al	Ba	Ca	Cr	Fe	Pb	Mg	Ni	K	Sr	Si	Ag	Na	Others
Totals =>	772,770,000	522,217,000	217,224,000		731,000	4,418,000	188,000	69,000	19,349,000	247,728,000	37,556,000	24,389,000	3,864,000	16,000,000			1,223,000	1,343,000			440,000	29,000				164,468,000	33,314,000
			28.1%		0.1%	0.6%	0.0%	0.0%	2.5%	32.1%	4.9%	3.2%	0.5%	2.1%			0.2%	0.2%			0.1%	0.0%				21.3%	4.3%
A - 101	11,121,000	9,896,000	1,177,000			32,000			73,000	6,590,000	127,000	106,000	98,000	52,000			16,000									2,802,000	48,000
A - 102	522,000	382,000	120,000			4,000			13,000	200,000	14,000	22,000	4,000	6,000			1,000	2,000								116,000	20,000
A - 103	5,236,000	3,091,000	1,763,000			65,000	5,000		236,000	964,000	137,000	475,000	35,000	75,000			22,000	48,000			11,000					1,018,000	384,000
A - 104	397,000	235,000	133,000			5,000			18,000	73,000	10,000	36,000	3,000	6,000			2,000	4,000			1,000					77,000	29,000
A - 105	269,000	159,000	90,000			3,000			12,000	50,000	7,000	25,000	2,000	4,000			1,000	2,000			1,000					52,000	20,000
A - 106	1,770,000	1,045,000	593,000			22,000	2,000		80,000	326,000	45,000	162,000	12,000	25,000			7,000	16,000			4,000					344,000	130,000
AN - 101	8,423,000	4,505,000	3,186,000		14,000	29,000			222,000	1,277,000	888,000	112,000		346,000												1,617,000	532,000
AN - 102	13,457,000	7,202,000	5,404,000		23,000	47,000			356,000	2,043,000	1,411,000	186,000	1,000	551,000				1,000								2,583,000	851,000
AN - 103	10,347,000	4,293,000	5,783,000		122,000	110,000		32,000	641,000	1,125,000	408,000	50,000	21,000	381,000				13,000			8,000	27,000				1,363,000	272,000
AN - 104	10,913,000	5,851,000	4,370,000		18,000	39,000			293,000	1,663,000	1,129,000	166,000	2,000	442,000			1,000	2,000			1,000					2,095,000	692,000
AN - 105	15,874,000	8,063,000	6,060,000		26,000	51,000			397,000	2,286,000	1,589,000	201,000		620,000												2,893,000	952,000
AN - 106	13,318,000	7,123,000	5,353,000		23,000	45,000			331,000	2,020,000	1,402,000	179,000		547,000												2,556,000	842,000
AN - 107	12,649,000	6,772,000	5,076,000		21,000	44,000			336,000	1,972,000	1,322,000	179,000	1,000	517,000			1,000	1,000								2,428,000	800,000
AP - 101	14,134,000	7,569,000	5,690,000		24,000	48,000			373,000	2,146,000	1,492,000	188,000		582,000												2,716,000	894,000
AP - 102	1,773,000	949,000	713,000		3,000	6,000			47,000	269,000	187,000	24,000		73,000												340,000	112,000
AP - 103	15,114,000	8,084,000	6,076,000		26,000	51,000			398,000	2,292,000	1,593,000	201,000		622,000												2,901,000	955,000
AP - 104	267,000	142,000	107,000			1,000			7,000	40,000	28,000	4,000		11,000												51,000	17,000
AP - 105	10,982,000	5,873,000	4,415,000		19,000	37,000			289,000	1,665,000	1,157,000	146,000		452,000												2,108,000	694,000
AP - 106	15,087,000	8,069,000	6,065,000		26,000	51,000			398,000	2,288,000	1,590,000	201,000		620,000												2,895,000	953,000
AP - 107	14,967,000	8,003,000	6,017,000		25,000	51,000			394,000	2,269,000	1,577,000	199,000		616,000												2,872,000	946,000
AP - 108	11,589,000	6,358,000	4,779,000		20,000	40,000			313,000	1,803,000	1,253,000	158,000		489,000												2,282,000	751,000
AW - 101	15,051,000	8,116,000	5,972,000		24,000	62,000	1,000		419,000	2,321,000	1,491,000	293,000	8,000	587,000			5,000	11,000			3,000					2,891,000	963,000
AW - 102	13,822,000	7,392,000	5,556,000		23,000	47,000			364,000	2,096,000	1,456,000	185,000		568,000												2,653,000	873,000
AW - 103	8,912,000	5,052,000	3,243,000		6,000	77,000	5,000		332,000	1,520,000	528,000	520,000	35,000	227,000			21,000	47,000			11,000					1,723,000	616,000
AW - 104	14,945,000	8,595,000	5,456,000		19,000	73,000	3,000		416,000	2,922,000	1,250,000	392,000	29,000	499,000			12,000	23,000			5,000					2,952,000	894,000
AW - 105	12,229,000	6,776,000	4,638,000		14,000	80,000	4,000		402,000	1,992,000	932,000	492,000	28,000	389,000			18,000	39,000			9,000					2,357,000	816,000
AW - 106	7,044,000	4,285,000	2,348,000		5,000	50,000	3,000		222,000	1,605,000	410,000	323,000	29,000	172,000			14,000	27,000			6,000					1,419,000	417,000
AX - 101	8,730,000	7,765,000	924,000			25,000			57,000	5,170,000	100,000	84,000	77,000	41,000			12,000									2,199,000	38,000
AX - 102	477,000	382,000	85,000			2,000			8,000	225,000	11,000	13,000	4,000	5,000			1,000	1,000								112,000	11,000
AX - 103	1,311,000	1,157,000	144,000			4,000			9,000	767,000	13,000	14,000	11,000	5,000			2,000									329,000	7,000
AX - 104	99,000	57,000	33,000			1,000			4,000	18,000	3,000	9,000	1,000	1,000				1,000								19,000	7,000
AY - 101	12,570,000	6,788,000	4,976,000		19,000	53,000	1,000		353,000	1,945,000	1,231,000	259,000	8,000	483,000			5,000	11,000			3,000					2,415,000	806,000
AY - 102	5,678,000	3,061,000	2,253,000		9,000	23,000			158,000	876,000	562,000	111,000	3,000	221,000			2,000	4,000			1,000					1,091,000	363,000
AZ - 101	12,571,000	6,751,000	5,021,000		21,000	47,000			341,000	1,972,000	1,285,000	206,000	3,000	504,000			2,000	5,000			1,000					2,414,000	799,000
AZ - 102	12,924,000	6,946,000	5,110,000		20,000	56,000	1,000		365,000	2,002,000	1,259,000	273,000	9,000	497,000			5,000	12,000			3,000					2,484,000	830,000
B - 101	1,600,000	945,000	538,000			20,000	2,000		72,000	295,000	41,000	146,000	11,000	23,000			7,000	15,000			3,000					311,000	118,000
B - 102	425,000	283,000	119,000			4,000			14,000	125,000	13,000	25,000	3,000	5,000			1,000	2,000			1,000					89,000	23,000
B - 103	835,000	493,000	281,000			10,000	1,000		38,000	154,000	21,000	76,000	6,000	12,000			3,000	8,000			2,000					162,000	61,000
B - 104	5,000,000	3,241,000	1,522,000			55,000	4,000		198,000	1,266,000	119,000	398,000	36,000	64,000			19,000	39,000			9,000					1,034,000	317,000
B - 105	3,668,000	3,098,000	516,000			16,000	1,000		45,000	1,947,000	50,000	81,000	31,000	22,000			7,000	5,000			1,000					892,000	54,000
B - 106	1,656,000	979,000	557,000			21,000	2,000		75,000	305,000	43,000	150,000	11,000	24,000			7,000	15,000			4,000					322,000	121,000
B - 107	2,335,000	1,378,000	785,000			29,000	2,000		105,000	430,000	60,000	213,000	16,000	33,000			10,000	21,000			5,000					454,000	171,000
B - 108	1,331,000	787,000	447,000			17,000	1,000		60,000	245,000	34,000	122,000	9,000	19,000			6,000	12,000			3,000					259,000	98,000
B - 109	1,798,000	1,062,000	604,000			22,000	2,000		81,000	332,000	46,000	164,000	12,000	25,000			8,000	17,000			4,000					349,000	132,000
B - 110	3,482,000	2,054,000	1,171,000			43,000	3,000		157,000	642,000	89,000	318,000	23,000	49,000			14,000	32,000			7,000					677,000	256,000
B - 111	3,355,000	1,980,000	1,128,000			42,000	3,000		131,000	618,000	86,000	306,000	23,000	47,000			14,000	31,000			7,000					652,000	246,000
B - 112	465,000	271,000	159,000			5,000			20,000	84,000	12,000	39,000	3,000	8,000			2,000	4,000			1,000					90,000	34,000
B - 201	410,000	241,000	139,000			5,000			18,000	75,000	11,000	36,000	3,000	6,000			2,000	4,000			1,000					80,000	28,000
B - 202	382,000	226,000	128,000			5,000			17,000	70,000	10,000	35,000	3,000	5,000			2,000	4,000			1,000					74,000	28,000
B - 203	721,000	426,000	243,000			9,000	1,000		32,000	133,000	19,000	65,000	5,000	10,000			3,000	7,000			2,000					140,000	53,000
B - 204	787,000	417,000	232,000			9,000	1,000		32,000	130,000	19,000	64,000	5,000	10,000			3,000	6,000			1,000					137,000	52,000
BX - 101	608,000	357,000	205,000			7,000	1,000		27,000	112,000	16,000	55,000	4,000	9,000			2,000	5,000			1,000					118,000	45,000
BX - 102	1,359,000	801,000	457,000			17,000	1,000		61,000	251,000	34,000	124,000	9,000	19,000			6,000	12,000			3,000					264,000	100,000
BX - 103	931,000	547,000	316,000			11,000	1,000		41,000	170,000	23,000	81,000	6,000	14,000			4,000	8,000			2,000					181,000	68,000
BX - 104	1,399,000	825,000	473,000			17,000	1,000		63,000	257,000	39,000	125,000	9,000	21,000			6,000	12,000			3,000					272,000	102,000
BX - 105	712,000	427,000	233,000			8,000	1,000		30,000	143,000	23,000	37,000	4,000	11,000			3,000	6,000			1,000					148,000	49,000
BX - 106	639,000	365,000	222,000			6,000			25,000	111,000	32,000	43,000	3,000	14,000			2,000	4,000			1,000					124,000	45,000
BX - 107	4,284,000	2,284,000	1,642,000			61,000	5,000		221,000	900,000	125,000	446,000	33,000	69,000			20,000	45,000			10,000					949,000	359,000
BX - 108	368,000	212,000	124,000			5,000			17,000	68,000	9,000	34,000	2,000	5,000			2,000	3,000			1,000					72,000	27,000
BX - 109	2,733,000	1,613,000	918,000			34,000	3,000		124,000	504,000	69,000	250,000	18,000	38,000			11,000	25,000			6,000					531,000	201,000
BX - 110	2,794,000	1,681,000	915,000			34,000	3,000		122,000	558,000	78,000	246,000	19,000	38,000			11,000	25,000			6,000					549,000	198,000
BX - 111	2,384,000	2,190,000	608,000			18,000	1,000		61,000	1,287,000	78,000	107,000	21,000	32,000			6,000	9,000			2,000					636,000	94,000
BX - 112	2,335,000	1,378,000	785,000			29,000	2,000		105,000	430,000	60,000	213,000	16,000	33,000			10,000	21,000			5,000					454,000	171,000

Table A-2. Hanford Site Underground Storage Tank Chemical Compositions (pounds). (sheet 2 of 3)

Tank	Total	Total (Dry)	H2O	pH	Organics	Anions CO3	Cl	F	OH	NO3	NO2	PO4	SO4	Cations Al	Ba	Ca	Cr	Fe	Pb	Mg	Ni	K	Se	Si	Ag	Na	Others
Totals =>	772,278,000	323,317,000	217,234,000		721,000	4,418,000	188,000	69,000	19,149,000	247,728,000	37,556,000	24,389,000	3,864,000	16,000,000			1,223,000	1,845,000			440,000	39,000				164,468,000	33,314,000
			28.1%		0.1%	0.6%	0.0%	0.0%	2.5%	32.1%	4.9%	3.2%	0.5%	2.1%			0.2%	0.2%			0.1%	0.0%				21.3%	4.3%
BY - 101	4,786,000	3,800,000	859,000			28,000	2,000		90,000	2,211,000	76,000	171,000	39,000	37,000			11,000	14,000			3,000					1,118,000	127,000
BY - 102	3,977,000	3,543,000	418,000			11,000			25,000	2,363,000	45,000	37,000	35,000	18,000			6,000									1,003,000	16,000
BY - 103	4,677,000	4,146,000	507,000			14,000			33,000	2,750,000	54,000	49,000	41,000	22,000			7,000	1,000								1,175,000	24,000
BY - 104	4,834,000	4,136,000	638,000			19,000	1,000		53,000	2,640,000	63,000	91,000	41,000	28,000			8,000	5,000			1,000					1,186,000	59,000
BY - 105	5,976,000	5,136,000	771,000			23,000	1,000		62,000	3,295,000	76,000	107,000	51,000	33,000			10,000	6,000			1,000					1,471,000	68,000
BY - 106	7,724,000	6,476,000	1,122,000			35,000	1,000		101,000	4,058,000	106,000	182,000	65,000	48,000			15,000	12,000			3,000					1,870,000	125,000
BY - 107	3,252,000	2,643,000	538,000			17,000	1,000		54,000	1,584,000	49,000	100,000	27,000	23,000			7,000	8,000			2,000					771,000	72,000
BY - 108	3,044,000	2,037,000	823,000			30,000	2,000		104,000	915,000	65,000	208,000	22,000	34,000			10,000	20,000			5,000					642,000	164,000
BY - 109	5,140,000	4,226,000	811,000			26,000	1,000		78,000	2,572,000	75,000	144,000	43,000	35,000			10,000	11,000			3,000					1,228,000	102,000
BY - 110	4,899,000	3,925,000	851,000			28,000	1,000		88,000	2,313,000	76,000	165,000	40,000	36,000			11,000	13,000			3,000					1,151,000	121,000
BY - 111	5,485,000	4,724,000	636,000			18,000			46,000	3,090,000	65,000	74,000	47,000	28,000			8,000	3,000			1,000					1,346,000	43,000
BY - 112	3,406,000	3,013,000	374,000			10,000			24,000	1,995,000	40,000	37,000	30,000	16,000			5,000	1,000								855,000	19,000
C - 101	1,246,000	735,000	419,000			16,000	1,000		56,000	230,000	32,000	114,000	8,000	17,000			5,000	11,000			3,000					242,000	92,000
C - 102	5,990,000	3,538,000	2,013,000			75,000	6,000		271,000	1,105,000	152,000	548,000	40,000	84,000			25,000	55,000			13,000					1,164,000	440,000
C - 103	2,651,000	1,467,000	1,008,000		3,000	17,000	1,000		86,000	431,000	209,000	184,000	6,000	85,000			4,000	8,000			2,000					311,000	176,000
C - 104	4,177,000	2,465,000	1,403,000			52,000	4,000		189,000	770,000	106,000	382,000	28,000	58,000			17,000	38,000			9,000					812,000	307,000
C - 105	2,124,000	1,255,000	714,000			26,000	2,000		96,000	392,000	54,000	194,000	14,000	30,000			9,000	20,000			5,000					413,000	156,000
C - 106	3,216,000	1,877,000	1,109,000		1,000	36,000	3,000		137,000	579,000	116,000	261,000	19,000	57,000			12,000	26,000			6,000					624,000	232,000
C - 107	3,294,000	2,298,000	1,308,000			48,000	4,000		176,000	718,000	99,000	356,000	26,000	54,000			16,000	36,000			8,000					757,000	286,000
C - 108	935,000	533,000	314,000			12,000	1,000		42,000	172,000	24,000	86,000	6,000	13,000			4,000	9,000			2,000					182,000	69,000
C - 109	931,000	547,000	316,000			11,000	1,000		41,000	170,000	28,000	81,000	6,000	14,000			4,000	8,000			2,000					181,000	68,000
C - 110	2,715,000	1,601,000	917,000			33,000	3,000		122,000	499,000	74,000	243,000	18,000	40,000			11,000	24,000			6,000					528,000	199,000
C - 111	807,000	475,000	271,000			10,000	1,000		36,000	149,000	20,000	74,000	5,000	11,000			3,000	7,000			2,000					157,000	59,000
C - 112	1,473,000	870,000	495,000			18,000	1,000		67,000	272,000	37,000	135,000	10,000	21,000			6,000	14,000			3,000					286,000	108,000
C - 201	28,000	15,000	9,000						1,000	5,000	1,000	3,000														5,000	2,000
C - 202	14,000	8,000	5,000						1,000	3,000		1,000														3,000	1,000
C - 203	71,000	41,000	24,000			1,000			3,000	13,000	2,000	6,000		1,000				1,000								14,000	5,000
C - 204	42,000	25,000	14,000			1,000			2,000	8,000	1,000	4,000		1,000												8,000	3,000
S - 101	5,609,000	3,901,000	1,435,000			49,000	3,000		173,000	1,846,000	127,000	337,000	41,000	64,000			17,000	32,000			7,000					1,205,000	272,000
S - 102	6,413,000	5,697,000	687,000			19,000			43,000	3,787,000	74,000	64,000	56,000	30,000			9,000	1,000								1,614,000	30,000
S - 103	2,946,000	2,501,000	410,000			10,000			29,000	1,592,000	57,000	40,000	24,000	23,000			4,000	1,000								721,000	35,000
S - 104	4,162,000	2,458,000	1,399,000			52,000	4,000		188,000	767,000	107,000	380,000	28,000	59,000			17,000	38,000			9,000					809,000	306,000
S - 105	3,323,000	4,735,000	565,000			15,000			35,000	3,151,000	61,000	52,000	47,000	25,000			8,000									1,341,000	24,000
S - 106	6,412,000	5,576,000	778,000			23,000			58,000	3,624,000	79,000	97,000	55,000	34,000			10,000	4,000			1,000					1,591,000	58,000
S - 107	5,834,000	3,210,000	1,511,000			54,000	4,000		195,000	1,256,000	123,000	388,000	35,000	85,000			18,000	38,000			9,000					1,023,000	313,000
S - 108	7,054,000	6,269,000	754,000			21,000			47,000	4,168,000	81,000	78,000	62,000	33,000			10,000	1,000								1,776,000	33,000
S - 109	6,656,000	5,875,000	741,000			21,000			50,000	3,879,000	78,000	77,000	58,000	32,000			10,000	2,000								1,668,000	40,000
S - 110	8,397,000	6,924,000	1,310,000			42,000	2,000		126,000	4,229,000	121,000	230,000	70,000	56,000			17,000	17,000			4,000					2,010,000	163,000
S - 111	7,314,000	5,878,000	1,262,000			40,000	2,000		126,000	3,480,000	123,000	230,000	59,000	57,000			16,000	18,000			4,000					1,723,000	174,000
S - 112	7,444,000	6,607,000	801,000			22,000			51,000	4,388,000	86,000	76,000	65,000	35,000			11,000	1,000								1,872,000	36,000
SX - 101	5,599,000	4,508,000	958,000			31,000	2,000		98,000	2,671,000	87,000	182,000	46,000	41,000			12,000	15,000			3,000					1,328,000	134,000
SX - 102	6,625,000	5,406,000	1,078,000			35,000	2,000		107,000	3,257,000	98,000	198,000	55,000	46,000			14,000	15,000			4,000					1,375,000	142,000
SX - 103	7,893,000	6,539,000	1,209,000			38,000	2,000		114,000	4,016,000	114,000	207,000	66,000	52,000			16,000	15,000			3,000					1,896,000	146,000
SX - 104	7,500,000	6,105,000	1,232,000			40,000	2,000		123,000	3,667,000	112,000	228,000	62,000	53,000			16,000	18,000			4,000					1,780,000	164,000
SX - 105	8,148,000	6,948,000	1,094,000			33,000	1,000		92,000	4,417,000	107,000	160,000	70,000	47,000			14,000	10,000			2,000					1,995,000	105,000
SX - 106	6,406,000	5,367,000	953,000		1,000	28,000			64,000	3,377,000	151,000	77,000	49,000	61,000			8,000	2,000								1,537,000	86,000
SX - 107	1,473,000	870,000	495,000			18,000	1,000		67,000	272,000	37,000	135,000	10,000	21,000			6,000	14,000			3,000					286,000	108,000
SX - 108	1,629,000	962,000	547,000			20,000	2,000		74,000	300,000	41,000	149,000	11,000	23,000			7,000	15,000			3,000					317,000	120,000
SX - 109	3,548,000	2,092,000	1,189,000			44,000	4,000		168,000	653,000	98,000	324,000	24,000	49,000			15,000	33,000			8,000					688,000	260,000
SX - 110	878,000	519,000	295,000			11,000	1,000		48,000	162,000	22,000	80,000	6,000	12,000			4,000	8,000			2,000					171,000	64,000
SX - 111	1,778,000	1,045,000	595,000			22,000	2,000		80,000	326,000	45,000	162,000	12,000	25,000			7,000	16,000			4,000					344,000	130,000
SX - 112	1,303,000	768,000	438,000			16,000	1,000		59,000	240,000	33,000	119,000	9,000	18,000			5,000	12,000			3,000					253,000	96,000
SX - 113	368,000	218,000	124,000			5,000			17,000	68,000	9,000	34,000	2,000	5,000			2,000	3,000			1,000					72,000	27,000
SX - 114	2,563,000	1,514,000	861,000			32,000	3,000		116,000	473,000	65,000	234,000	17,000	36,000			11,000	24,000			5,000					496,000	188,000
SX - 115	178,000	100,000	57,000			2,000			8,000	31,000	4,000	16,000	1,000	2,000			1,000	2,000								33,000	12,000
SY - 101	12,637,000	8,392,000	4,067,000		78,000	82,000		18,000	411,000	4,358,000	329,000	92,000	68,000	257,000			9,000	7,000			4,000	15,000				2,471,000	198,000
SY - 102	9,082,000	4,913,000	3,585,000		14,000	40,000	1,000		258,000	1,410,000	277,000	200,000	7,000	346,000			4,000	9,000			2,000					1,745,000	584,000
SY - 103	8,518,000	3,813,000	4,483,000		78,000	75,000		19,000	449,000	1,841,000	471,000	59,000	13,000	321,000				8,000			5,000	17,000				1,257,000	302,000

Table A-2. Hanford Site Underground Storage Tank Chemical Compositions (pounds). (sheet 3 of 3)

Tank	Total	Total (Dry)	H2O	pH	Organics	Anions CO3	Cl	F	OH	NO3	NO2	PO4	SO4	Cations Al	Be	Ca	Cr	Fe	Pb	Mg	Ni	K	Se	Si	Ag	Na	Others
Totals =>	772,778,000	522,317,000	217,234,000		731,000	4,418,000	188,000	69,000	19,249,000	247,728,000	37,256,000	24,309,000	3,864,000	16,000,000			1,323,000	1,545,000			440,000	39,000				164,468,000	33,314,000
			28.1%		0.1%	0.6%	0.0%	0.0%	2.5%	32.1%	4.9%	3.2%	0.5%	2.1%			0.2%	0.2%			0.1%	0.0%				21.3%	4.3%
T - 101	1,859,000	1,076,000	651,000		1,000	20,000	1,000		77,000	330,000	79,000	139,000	10,000	37,000			6,000	13,000			3,000					360,000	132,000
T - 102	442,000	251,000	160,000			4,000			17,000	76,000	25,000	27,000	2,000	11,000			1,000	2,000			1,000					85,000	31,000
T - 103	379,000	221,000	131,000			4,000			16,000	68,000	14,000	31,000	2,000	7,000			1,000	3,000			1,000					74,000	27,000
T - 104	6,299,000	3,716,000	2,119,000			78,000	6,000		284,000	1,160,000	163,000	573,000	42,000	89,000			26,000	58,000			13,000					1,224,000	462,000
T - 105	1,388,000	819,000	466,000			17,000	1,000		63,000	256,000	35,000	127,000	9,000	19,000			6,000	13,000			3,000					270,000	102,000
T - 106	296,000	173,000	101,000			3,000			13,000	54,000	10,000	25,000	2,000	5,000			1,000	2,000			1,000					57,000	21,000
T - 107	2,542,000	1,494,000	862,000			31,000	2,000		113,000	465,000	74,000	223,000	16,000	39,000			10,000	22,000			5,000					494,000	183,000
T - 108	623,000	369,000	209,000			8,000	1,000		28,000	115,000	16,000	57,000	4,000	9,000			3,000	6,000			1,000					121,000	46,000
T - 109	821,000	485,000	276,000			10,000	1,000		37,000	151,000	21,000	75,000	6,000	11,000			3,000	8,000			2,000					160,000	60,000
T - 110	5,365,000	3,165,000	1,805,000			66,000	5,000		242,000	988,000	139,000	488,000	36,000	76,000			22,000	49,000			11,000					1,843,000	394,000
T - 111	6,484,000	3,827,000	2,180,000			80,000	6,000		293,000	1,195,000	167,000	591,000	44,000	91,000			27,000	59,000			14,000					1,260,000	476,000
T - 112	943,000	553,000	323,000			11,000	1,000		41,000	171,000	31,000	79,000	6,000	16,000			4,000	8,000			2,000					183,000	68,000
T - 201	410,000	241,000	139,000			5,000			18,000	75,000	11,000	36,000	3,000	6,000			2,000	4,000			1,000					80,000	30,000
T - 202	297,000	176,000	100,000			4,000			13,000	55,000	8,000	27,000	2,000	4,000			1,000	3,000			1,000					58,000	22,000
T - 203	496,000	291,000	167,000			6,000			22,000	91,000	13,000	45,000	3,000	7,000			2,000	5,000			1,000					96,000	34,000
T - 204	538,000	319,000	181,000			7,000	1,000		24,000	99,000	14,000	49,000	4,000	8,000			2,000	5,000			1,000					105,000	40,000
TX - 101	1,230,000	724,000	416,000			15,000	1,000		55,000	226,000	34,000	109,000	8,000	18,000			5,000	11,000			3,000					239,000	90,000
TX - 102	1,318,000	1,174,000	138,000			4,000			8,000	783,000	15,000	12,000	12,000	6,000			2,000									332,000	5,000
TX - 103	2,223,000	1,312,000	747,000			28,000	2,000		101,000	410,000	56,000	203,000	15,000	31,000			9,000	20,000			5,000					452,000	163,000
TX - 104	759,000	672,000	84,000			2,000			5,000	445,000	10,000	7,000	7,000	4,000			1,000									191,000	4,000
TX - 105	7,102,000	6,328,000	746,000			20,000			45,000	4,220,000	81,000	66,000	62,000	33,000			10,000									1,791,000	29,000
TX - 106	5,283,000	4,706,000	555,000			15,000			34,000	3,139,000	60,000	49,000	46,000	24,000			7,000									1,332,000	21,000
TX - 107	421,000	370,000	48,000			1,000			3,000	244,000	6,000	4,000	4,000	2,000			1,000									105,000	2,000
TX - 108	1,563,000	1,392,000	164,000			4,000			10,000	929,000	18,000	14,000	14,000	7,000			2,000									394,000	6,000
TX - 109	4,478,000	3,990,000	470,000			13,000			29,000	2,661,000	51,000	41,000	39,000	21,000			6,000									1,129,000	18,000
TX - 110	5,388,000	4,800,000	564,000			15,000			34,000	3,201,000	61,000	50,000	47,000	25,000			8,000									1,359,000	22,000
TX - 111	4,315,000	3,845,000	453,000			12,000			28,000	2,564,000	49,000	40,000	38,000	20,000			6,000									1,088,000	18,000
TX - 112	7,569,000	6,744,000	795,000			21,000			48,000	4,497,000	86,000	70,000	67,000	35,000			11,000									1,909,000	31,000
TX - 113	7,079,000	6,307,000	743,000			20,000			45,000	4,206,000	80,000	66,000	62,000	33,000			10,000									1,785,000	29,000
TX - 114	6,259,000	5,560,000	655,000			18,000			40,000	3,707,000	71,000	58,000	55,000	29,000			9,000									1,573,000	25,000
TX - 115	7,464,000	6,650,000	784,000			21,000			48,000	4,435,000	85,000	69,000	66,000	34,000			10,000									1,882,000	30,000
TX - 116	7,359,000	6,556,000	773,000			21,000			47,000	4,372,000	83,000	68,000	65,000	34,000			10,000									1,856,000	30,000
TX - 117	7,308,000	6,505,000	767,000			21,000			47,000	4,337,000	83,000	68,000	64,000	34,000			10,000									1,841,000	30,000
TX - 118	4,047,000	3,606,000	425,000			11,000			26,000	2,404,000	46,000	37,000	36,000	19,000			6,000									1,021,000	16,000
TY - 101	1,671,000	987,000	561,000			21,000	2,000		76,000	308,000	42,000	153,000	11,000	23,000			7,000	15,000			4,000					325,000	123,000
TY - 102	746,000	664,000	78,000			2,000			5,000	443,000	8,000	7,000	7,000	3,000			1,000									188,000	3,000
TY - 103	2,294,000	1,356,000	771,000			29,000	2,000		104,000	423,000	58,000	210,000	16,000	32,000			10,000	21,000			5,000					446,000	168,000
TY - 104	649,000	382,000	221,000			8,000	1,000		29,000	118,000	20,000	56,000	4,000	10,000			3,000	6,000			1,000					126,000	47,000
TY - 105	3,271,000	1,932,000	1,099,000			41,000	3,000		148,000	603,000	83,000	299,000	22,000	46,000			14,000	30,000			7,000					636,000	240,000
TY - 106	241,000	142,000	81,000			3,000			11,000	44,000	6,000	22,000	2,000	3,000			1,000	2,000			1,000					47,000	18,000
U - 101	352,000	205,000	121,000			4,000			15,000	64,000	12,000	29,000	2,000	6,000			1,000	3,000			1,000					68,000	25,000
U - 102	4,499,000	3,740,000	684,000			19,000	1,000		57,000	2,317,000	82,000	93,000	36,000	35,000			8,000	6,000			1,000					1,085,000	75,000
U - 103	5,539,000	4,753,000	740,000			20,000			56,000	3,041,000	86,000	89,000	46,000	36,000			9,000	4,000			1,000					1,365,000	64,000
U - 104	1,728,000	1,022,000	581,000			22,000	2,000		78,000	319,000	44,000	158,000	12,000	24,000			7,000	16,000			4,000					336,000	127,000
U - 105	5,016,000	4,157,000	778,000	1,000		19,000			59,000	2,576,000	110,000	86,000	39,000	45,000			8,000	4,000			1,000					1,209,000	81,000
U - 106	2,725,000	2,245,000	431,000			11,000			36,000	1,380,000	55,000	56,000	21,000	23,000			5,000	3,000			1,000					654,000	48,000
U - 107	4,823,000	4,085,000	678,000	1,000		16,000			47,000	2,396,000	96,000	64,000	38,000	39,000			7,000	2,000								1,179,000	59,000
U - 108	5,571,000	4,727,000	775,000	1,000		20,000			58,000	3,000,000	99,000	87,000	45,000	41,000			9,000	4,000			1,000					1,362,000	70,000
U - 109	5,551,000	4,642,000	815,000			22,000	1,000		67,000	2,907,000	96,000	108,000	45,000	41,000			9,000	6,000			1,000					1,345,000	85,000
U - 110	2,634,000	1,537,000	885,000			33,000	3,000		119,000	486,000	67,000	241,000	18,000	37,000			11,000	24,000			6,000					512,000	193,000
U - 111	3,982,000	3,366,000	495,000			15,000			39,000	2,168,000	49,000	66,000	34,000	21,000			7,000	3,000			1,000					943,000	41,000
U - 112	698,000	405,000	235,000			8,000	1,000		30,000	126,000	22,000	59,000	4,000	11,000			3,000	6,000			1,000					134,000	50,000
U - 201	78,000	40,000	24,000			1,000			3,000	12,000	3,000	5,000		1,000				1,000								14,000	5,000
U - 202	78,000	40,000	24,000			1,000			3,000	12,000	3,000	5,000		1,000				1,000								14,000	5,000
U - 203	41,000	23,000	15,000						2,000	7,000	2,000	3,000		1,000												8,000	3,000
U - 204	41,000	23,000	15,000						2,000	7,000	2,000	3,000		1,000												8,000	3,000

Table A-2.1. Hanford Site Underground Storage Tank Farm Chemical Characteristics.

Farms	Total	Total (Dry)	H2O	pH	Organics	Anions								Cations													Others
						CO3	Cl	F	OH	NO3	NO2	PO4	SO4	Al	Ba	Ca	Cr	Fe	Pb	Mg	Ni	K	Se	Si	Ag	Na	
Totals =>	772,770,000	522,217,000	217,224,001		721,000	4,418,000	188,000	69,000	19,249,000	247,728,001	37,556,000	24,389,000	3,864,000	16,000,000			1,223,000	1,845,000			440,000	59,000				164,468,001	33,314,000
			28.1%		0.1%	0.6%	0.0%	0.0%	2.5%	32.1%	4.9%	3.2%	0.5%	2.1%			0.2%	0.2%			0.1%	0.0%				21.3%	4.3%
A	19,315,000	14,808,000	3,878,000			131,000	7,000		432,000	8,203,000	340,000	826,000	154,000	168,000			49,000	72,000			17,000					4,409,000	631,000
AN	84,181,000	43,809,000	35,432,000		247,000	365,000		32,000	2,596,000	12,336,000	8,141,000	1,073,000	25,000	3,404,000			2,000	17,000			9,000	27,000				15,535,000	4,941,000
AP	84,233,000	45,047,000	33,862,000		143,000	285,000			2,219,000	12,772,000	8,877,000	1,121,000		3,465,000												16,165,000	5,322,000
AW	72,003,000	40,216,000	27,205,000		91,000	389,000	16,000		2,155,000	12,456,000	6,087,000	2,205,000	129,000	2,442,000			70,000	147,000			34,000					13,995,000	4,579,000
AX	10,617,000	9,361,000	1,188,000			32,000			78,000	6,180,000	129,000	120,000	93,000	53,000			15,000	2,000								2,659,000	63,000
AY	18,248,000	9,849,000	7,229,000		28,000	76,000	1,000		511,000	2,821,000	1,793,000	370,000	11,000	706,000			7,000	15,000			4,000					3,506,000	1,169,000
AZ	25,495,000	13,737,000	10,131,000		41,000	103,000	1,000		706,000	3,924,000	2,544,000	479,000	12,000	1,001,000			7,000	17,000			4,000					4,898,000	1,629,000
B	28,250,000	17,881,000	8,575,000			312,000	23,000		1,115,000	6,851,000	676,000	2,238,000	200,000	362,000			108,000	222,000			52,000					5,722,000	1,794,000
BX	21,645,000	13,286,000	6,898,000			247,000	19,000		897,000	4,711,000	575,000	1,781,000	144,000	303,000			83,000	175,000			41,000					4,310,000	1,459,000
BY	57,120,000	47,827,000	8,348,000			259,000	10,000		758,000	29,766,000	790,000	1,365,000	481,000	358,000			108,000	94,000			22,000					13,816,000	940,000
C	30,314,000	17,770,000	10,339,000		4,000	356,000	28,000		1,326,000	5,516,000	955,000	2,592,000	186,000	486,000			116,000	257,000			61,000					5,887,000	2,203,000
S	72,764,000	59,631,000	11,653,000			368,000	15,000		1,121,000	36,167,000	1,117,000	2,041,000	600,000	513,000			147,000	153,000			34,000					17,355,000	1,484,000
SX	55,865,000	42,961,000	11,125,000		1,000	367,000	23,000		1,219,000	23,930,000	1,015,000	2,305,000	440,000	491,000			138,000	202,000			45,000					12,785,000	1,782,000
SY	30,257,000	17,118,000	12,055,000		162,000	197,000	1,000	37,000	1,118,000	7,009,000	1,677,000	351,000	89,000	924,000			13,000	24,000			11,000	32,000				5,473,000	1,084,000
T	29,182,000	17,176,000	9,870,000		1,000	354,000	25,000		1,301,000	5,349,000	820,000	2,592,000	191,000	435,000			117,000	260,000			61,000					5,670,000	2,132,000
TX	81,137,000	71,241,000	9,329,000			262,000	3,000		653,000	46,780,000	975,000	1,031,000	707,000	409,000			123,000	31,000			8,000					20,259,000	569,000
TY	8,872,000	5,463,000	2,811,000			104,000	8,000		373,000	1,939,000	217,000	747,000	62,000	117,000			36,000	74,000			18,000					1,768,000	599,000
U	43,272,000	35,036,000	7,296,000		3,000	211,000	8,000		671,000	21,018,000	828,000	1,152,000	340,000	363,000			84,000	83,000			19,000					10,256,000	934,000

Table A-3. Hanford Site Underground Storage Tank Radionuclide Composition. (sheet 1 of 3)

Tank	Total (Ci)	Total (lb)	Pu239 (Ci)	Pu239 (lb)	Pu238 (Ci)	Pu238 (lb)	U238 (Ci)	U238 (lb)	U235 (Ci)	U235 (lb)	U234 (Ci)	U234 (lb)	U233 (Ci)	U233 (lb)	Th230 (Ci)	Th230 (lb)	Ra226 (Ci)	Ra226 (lb)	Pb210 (Ci)	Pb210 (lb)	Pm147 (Ci)	Pm147 (lb)	Ce144 (Ci)	Ce144 (lb)	Ba137 (Ci)	Ba137 (lb)	Cs137 (Ci)	Cs137 (lb)	Sr90 (Ci)	Sr90 (lb)	Y90 (Ci)	Y90 (lb)	Others (Ci)	Others (lb)
Totals =>	148,736,364	3,126,724	21,429	761	1,151	6.1	474	3,183,896	28.0	28,423	0.156	0.055	0.0057	0.0013											27,799,097	0.00	29,293,897	744	25,267,298	883	25,284,021	0.22	1,152,695	19.89
A - 101	5,404,344	48,666	2,422	86	81	0	7	48,226	0	310	0	0	0	0															2,636,976	42	2,657,574	0.01	87,284	1.51
A - 102	14,155,757	6,649	335	12	16	0	1	6,679	0	41	0	0	0	0											283,681	0.00	299,906	8	6,719,454	107	6,720,965	0.03	131,402	2.27
A - 103	95,177	8,849	345	12	20	0	1	8,778	0	58	0	0	0	0											18,524	0.00	19,584	0	18,195	0	18,199	0.00	20,310	0.35
A - 104	7,047,261	12,170	565	20	15	0	2	12,017	0	76	0	0	0	0											0	0.00	0	0	3,504,128	56	3,504,916	0.01	37,635	0.65
A - 105	69,788	1	0	0	0	0	0	0	0	0	0	0	0	0											33,916	0.00	35,856	1	0	0	0	0.00	15	0.00
A - 106	49,732	24,125	1,159	40	46	0	4	23,930	0	154	0	0	0	0											0	0.00	0	0	0	0	0	0.00	48,544	0.84
AN - 101																																		
AN - 102																																		
AN - 103																																		
AN - 104																																		
AN - 105																																		
AN - 106																																		
AN - 107																																		
AP - 101																																		
AP - 102																																		
AP - 103																																		
AP - 104																																		
AP - 105																																		
AP - 106																																		
AP - 107																																		
AP - 108																																		
AW - 101																																		
AW - 102																																		
AW - 103																																		
AW - 104																																		
AW - 105																																		
AW - 106																																		
AZ - 101	2,684	7,327	276	19	24	0	1	7,263	0	55	0	0	0	0											0	0.00	0	0	0	0	0	0.00	2,323	0.04
AX - 102	14,939	254	129	3	9	0	0	248	0	2	0	0	0	0											0	0.00	0	0	0	0	0	0.00	14,801	0.26
AX - 103	73,331	1	0	0	0	0	0	0	0	0	0	0	0	0											16,287	0.00	17,219	0	18,676	0	18,680	0.00	2,469	0.04
AZ - 104	17,680,977	1,001	304	11	21	0	0	341	0	6	0	0	0	0											110,072	0.00	116,347	3	8,692,932	139	8,694,888	0.04	64,393	1.15
AY - 101																																		
AY - 102																																		
AZ - 101																																		
AZ - 102																																		
B - 101	11,144	47,856	543	19	33	0	7	47,494	0	342	0	0	0	0											0	0.00	0	0	0	0	0	0.00	10,560	0.18
B - 102	6,121	4,944	32	2	4	0	1	4,906	0	33	0	0	0	0											2,327	0.00	2,460	0	306	0	306	0.00	666	0.01
B - 103	39,924	12,784	178	6	5	0	2	12,697	0	81	0	0	0	0											9,396	0.00	9,954	0	9,184	0	9,186	0.00	2,039	0.04
B - 104	24,452	2,134	105	4	0	0	0	2,116	0	14	0	0	0	0											4,394	0.00	4,643	0	7,567	0	7,568	0.00	172	0.00
B - 105	77,870	1,259	11	0	0	0	0	1,249	0	8	0	0	0	0											36,601	0.00	38,694	1	1,136	0	1,136	0.00	292	0.01
B - 106	3,728	1,815	1	0	0	0	0	1,803	0	12	0	0	0	0											1,656	0.00	1,750	0	149	0	149	0.00	14	0.00
B - 107	133,385	12,942	42	1	0	0	2	12,853	0	86	0	0	0	0											42,865	0.00	45,317	1	22,438	0	22,435	0.00	293	0.01
B - 108	142,046	55,225	4	0	0	0	8	54,861	0	362	0	0	0	0											29,979	0.00	31,684	1	40,143	1	40,152	0.00	65	0.00
B - 109	35,321	13,938	0	0	0	0	2	13,846	0	92	0	0	0	0											12,081	0.00	12,772	0	5,218	0	5,219	0.00	29	0.00
B - 110	254,722	47,513	244	9	15	0	7	47,181	0	321	0	0	0	0											60,047	0.00	63,482	2	58,530	1	58,544	0.00	13,853	0.24
B - 111	1,110,536	2,861	33	1	0	0	0	2,827	0	19	0	0	0	0											536,048	0.00	566,699	14	0	0	0	0.00	7,762	0.13
B - 112	705,684	3,842	3	0	1	0	1	3,809	0	25	0	0	0	0											220,144	0.00	232,734	6	126,110	2	126,138	0.00	552	0.01
B - 201																																		
B - 202	760	17,620	194	7	4	0	3	17,503	0	110	0	0	0	0																			560	0.01
B - 203	2	0	1	0	0	0			0	0	0	0	0	0																			1	0.00
B - 204	16	0	7	0	0	0			0	0	0	0	0	0																			10	0.00
BX - 101	3,808	20,593	476	17	11	0	3	20,429	0	146	0	0	0	0											0	0.00	0	0	0	0	0	0.00	3,318	0.06
BX - 102	756,157	301	27	1	1	0	0	289	0	2	0	0	0	0											247,885	0.00	261,063	7	119,371	2	119,398	0.00	7,411	0.13
BX - 103	466,325	281	0	0	0	0	0	275	0	2	0	0	0	0											0	0.00	0	0	232,967	4	233,019	0.00	338	0.01
BX - 104	1,260,098	5,487	63	2	2	0	1	5,434	0	34	0	0	0	0											592,419	0.00	626,302	16	17,521	0	17,525	0.00	6,267	0.11
BX - 105	7,853,621	368	0	0	1	0	0	301	0	2	0	0	0	0											141,393	0.00	149,480	4	3,764,049	60	3,764,896	0.02	33,802	0.58
BX - 106	13,977,599	425	0	0	1	0	0	255	0	2	0	0	0	0											5,288,813	0.00	5,591,383	142	1,540,276	25	1,540,622	0.01	16,584	0.29
BX - 107	118,933	5,099	46	2	0	0	1	5,063	0	34	0	0	0	0											12,976	0.00	13,718	0	41,587	1	41,597	0.00	1,008	0.02
BX - 108	18,085	910	5	0	0	0	0	904	0	6	0	0	0	0											426	0.00	450	0	4,553	0	4,554	0.00	96	0.00
BX - 109	772,902	28,096	58	2	0	0	4	27,901	0	181	0	0	0	0											14,676	0.00	15,516	0	367,741	6	367,824	0.00	7,083	0.12
BX - 110	1,128,801	1,607	18	1	0	0	0	1,583	0	10	0	0	0	0											349,008	0.00	368,949	9	203,049	3	203,095	0.00	661	0.01
BX - 111	1,147,001	676	2	0	0	0	0	658	0	4	0	0	0	0											358,852	0.00	379,376	10	204,087	3	204,132	0.00	552	0.01
BX - 112	21,585	256,614	12	0	0	0	39	254,975	2	1,638	0	0	0	0											6,497	0.00	6,869	0	4,168	0	4,169	0.00	130	0.00

Table A-3. Hanford Site Underground Storage Tank Radionuclide Composition. (sheet 2 of 3)

Tank	Total		Pu239		Pu238		U238		U235		U234		U233	
	(Ci)	(lb)	(Ci)	(lb)	(Ci)	(lb)	(Ci)	(lb)	(Ci)	(lb)	(Ci)	(lb)	(Ci)	(lb)
Totals =>	168,724,364	3,124,724	21,428	761	1,151	6.1	474	3,183,594	28.8	20,423	0.126	0.055	0.0057	0.0013
BY - 101	1,586,725	362	0	0	0	0	0	342	0	2	0	0	0	0
BY - 102	537,086	2,809	0	0	0	0	0	2,785	0	18	0	0	0	0
BY - 103	1,364,312	30,979	917	33	19	0	5	30,722	0	213	0	0	0	0
BY - 104	1,512,175	316,587	148	5	39	0	48	314,539	2	2,025	0	0	0	0
BY - 105	1,206,925	119,910	88	3	11	0	18	119,128	1	765	0	0	0	0
BY - 106	1,642,145	1,613	33	1	10	0	0	1,583	0	11	0	0	0	0
BY - 107	645,344	33,453	33	1	7	0	5	33,230	0	214	0	0	0	0
BY - 108	551,242	5,950	34	1	10	0	1	5,904	0	38	0	0	0	0
BY - 109	494,441	2,172	0	0	0	0	0	2,153	0	14	0	0	0	0
BY - 110	1,484,612	435	50	2	12	0	0	414	0	3	0	0	0	0
BY - 111	1,597,609	7,432	0	0	0	0	1	7,367	0	47	0	0	0	0
BY - 112	320,759	351	0	0	0	0	0	345	0	2	0	0	0	0
C - 101	465,394	13,050	121	4	2	0	2	12,958	0	82	0	0	0	0
C - 102	1,989,865	100,536	2,011	71	53	0	15	99,796	1	653	0	0	0	0
C - 103	775,227	47,322	296	11	9	0	7	46,972	0	334	0	0	0	0
C - 104	713,790	61,065	691	25	50	0	9	60,609	0	425	0	0	0	0
C - 105	6,005,921	93,183	1,512	54	54	0	14	92,481	1	597	0	0	0	0
C - 106	1,046,532	17,531	305	11	7	0	3	17,399	0	112	0	0	0	0
C - 107	179,216	23,515	248	9	4	0	4	23,355	0	149	0	0	0	0
C - 108	45,299	9,784	88	3	2	0	1	9,718	0	62	0	0	0	0
C - 109	10,842	1,552	1	0	0	0	0	1,541	0	10	0	0	0	0
C - 110	23,962	841	118	4	11	0	0	831	0	6	0	0	0	0
C - 111	180,321	6,840	64	2	3	0	1	6,792	0	44	0	0	0	0
C - 112	81,056	10,257	61	2	1	0	2	10,189	0	65	0	0	0	0
C - 201	23	15	0	0	0	0	0	15	0	0	0	0	0	0
C - 202	23	1,494	0	0	0	0	0	1,484	0	10	0	0	0	0
C - 203	1,225	149	0	0	0	0	0	148	0	1	0	0	0	0
C - 204	1	1	0	0	0	0	0	1	0	0	0	0	0	0
S - 101	1,296,595	15,059	189	7	14	0	2	14,943	0	97	0	0	0	0
S - 102	105,344	2,210	19	1	2	0	0	2,194	0	14	0	0	0	0
S - 103	2,684	167	2	0	0	0	0	166	0	1	0	0	0	0
S - 104	993,416	13,056	179	6	9	0	2	12,958	0	84	0	0	0	0
S - 105	262,059	861	13	0	0	0	0	852	0	5	0	0	0	0
S - 106	358,127	100	1	0	0	0	0	95	0	1	0	0	0	0
S - 107	1,274,360	80,065	1,102	39	48	0	12	79,419	1	597	0	0	0	0
S - 108	594,644	1,555	27	1	3	0	0	1,536	0	11	0	0	0	0
S - 109	2,707,356	206	3	0	0	0	0	170	0	1	0	0	0	0
S - 110	3,945,948	5,676	91	3	2	0	1	5,591	0	36	0	0	0	0
S - 111	4,006,289	803	9	0	0	0	0	752	0	5	0	0	0	0
S - 112	11,560,921	240	1	0	0	0	0	102	0	1	0	0	0	0
SX - 101	1,400,483	9,275	194	7	35	0	1	9,196	0	61	0	0	0	0
SX - 102	3,932,291	1,194	19	1	4	0	0	1,155	0	8	0	0	0	0
SX - 103	4,660,663	424	2	0	1	0	0	367	0	2	0	0	0	0
SX - 104	374,532	7,637	191	7	35	0	1	7,576	0	50	0	0	0	0
SX - 105	1,178,644	659	16	1	4	0	0	643	0	4	0	0	0	0
SX - 106	775,855	1,413	0	0	0	0	0	1,395	0	9	0	0	0	0
SX - 107	3,488,489	10,880	267	9	20	0	2	10,763	0	90	0	0	0	0
SX - 108	2,181,538	11,663	289	10	16	0	2	11,547	0	88	0	0	0	0
SX - 109	659,755	7,119	176	6	16	0	1	7,054	0	54	0	0	0	0
SX - 110	1,446,575	11,034	273	10	6	0	2	10,920	0	93	0	0	0	0
SX - 111	2,011,813	14,142	349	12	31	0	2	14,003	0	111	0	0	0	0
SX - 112	2,309,533	8,081	200	7	18	0	1	7,994	0	61	0	0	0	0
SX - 113	1,426,757	2,558	63	2	1	0	0	2,524	0	16	0	0	0	0
SX - 114	2,119,080	17,879	442	16	12	0	3	17,712	0	133	0	0	0	0
SX - 115	3,155,784	4,612	113	4	3	0	1	4,540	0	34	0	0	0	0
SY - 101														
SY - 102														
SY - 103														

Tank	Th230		Ra226		Pb210		Pm147		Ce144		Ba137		Cs137		Sr90		Y90		Others	
	(Ci)	(lb)	(Ci)	(lb)	(Ci)	(lb)	(Ci)	(lb)	(Ci)	(lb)	(Ci)	(lb)	(Ci)	(lb)	(Ci)	(lb)	(Ci)	(lb)	(Ci)	(lb)
Totals =>											27,799,997	0.00	29,293,897	746	55,267,290	883	55,280,821	0.22	1,152,695	19.89
BY - 101											459,975	0.00	486,283	12	319,607	5	319,679	0.00	1,182	0.02
BY - 102											133,339	0.00	140,965	4	130,925	2	130,953	0.00	905	0.02
BY - 103											22,104	0.00	23,368	1	655,580	10	655,727	0.00	6,791	0.12
BY - 104											468,924	0.00	495,743	13	267,623	4	267,683	0.00	11,965	0.21
BY - 105											364,221	0.00	385,053	10	224,303	4	224,353	0.00	8,878	0.15
BY - 106											465,344	0.00	491,959	13	340,786	5	340,863	0.00	3,150	0.05
BY - 107											170,030	0.00	179,754	5	146,326	2	146,359	0.00	2,830	0.05
BY - 108											220,144	0.00	232,734	6	47,363	1	47,374	0.00	3,582	0.06
BY - 109											148,552	0.00	157,048	4	94,053	2	94,074	0.00	712	0.01
BY - 110											416,125	0.00	439,925	11	311,906	5	311,976	0.00	4,618	0.08
BY - 111											470,713	0.00	497,635	13	313,831	5	313,902	0.00	1,526	0.03
BY - 112											86,357	0.00	91,296	2	71,045	1	71,061	0.00	999	0.02
C - 101											161,081	0.00	170,293	4	65,751	1	65,765	0.00	2,380	0.04
C - 102											0	0.00	0	0	981,926	16	982,147	0.00	23,713	0.41
C - 103											0	0.00	0	0	381,218	6	381,304	0.00	12,392	0.21
C - 104											0	0.00	0	0	352,338	6	352,417	0.00	8,284	0.14
C - 105											246,990	0.00	261,117	7	2,685,856	43	2,686,460	0.01	123,918	2.14
C - 106															515,992	8	516,108	0.00	14,116	0.24
C - 107											7,535	0.00	7,966	0	79,998	1	80,016	0.00	3,445	0.06
C - 108											4	0.00	4	0	21,468	0	21,472	0.00	2,259	0.04
C - 109											4,841	0.00	5,118	0	66	0	66	0.00	749	0.01
C - 110											0	0.00	0	0	11,648	0	11,651	0.00	533	0.01
C - 111											3,759	0.00	3,974	0	85,389	1	85,408	0.00	1,723	0.03
C - 112											3,248	0.00	3,434	0	35,811	1	35,819	0.00	2,679	0.05
C - 201											2	0.00	2	0	6	0	6	0.00	8	0.00
C - 202											0	0.00	0	0	0	0	0	0.00	22	0.00
C - 203											0	0.00	0	0	611	0	611	0.00	2	0.00
C - 204											0	0.00	0	0	0	0	0	0.00	0	0.00
S - 101											83,941	0.00	88,742	2	558,350	9	558,476	0.00	6,881	0.12
S - 102											0	0.00	0	0	51,022	1	51,033	0.00	3,268	0.06
S - 103											0	0.00	0	0	0	0	0	0.00	2,681	0.05
S - 104											29,889	0.00	31,599	1	463,045	7	463,150	0.00	5,543	0.10
S - 105											82,330	0.00	87,039	2	45,919	1	45,930	0.00	827	0.01
S - 106											161,976	0.00	171,240	4	12,130	0	12,132	0.00	648	0.01
S - 107											0	0.00	0	0	630,558	10	630,692	0.00	11,954	0.21
S - 108											219,249	0.00	231,787	6	70,853	1	70,869	0.00	1,855	0.03
S - 109											1,234,951	0.00	1,305,583	33	81,057	1	81,075	0.00	4,686	0.08
S - 110											1,378,134	0.00	1,456,955	37	552,574	9	552,698	0.00	5,492	0.09
S - 111											1,270,747	0.00	1,343,426	34	695,050	11	695,206	0.00	1,831	0.03
S - 112											4,286,534	0.00	4,531,699	115	1,366,995	22	1,367,302	0.01	8,389	0.14
SX - 101											0	0.00	0	0	695,050	11	695,206	0.00	9,998	0.17
SX - 102											380	0.00	402	0	1,963,852	31	1,964,294	0.01	3,340	0.06
SX - 103											1,601,857	0.00	1,693,474	43	676,759	11	676,911	0.00	11,659	0.20
SX - 104											109,177	0.00	115,421	3	69,601	1	69,617	0.00	10,489	0.18
SX - 105											225,513	0.00	238,411	6	355,226	6	355,306	0.00	4,168	0.07
SX - 106											220,144	0.00	232,734	6	155,953	2	155,988	0.00	11,036	0.19
SX - 107											0	0.00	0	0	1,732,810	28	1,733,200	0.01	22,189	0.38
SX - 108											0	0.00	0	0	1,078,193	17	1,078,436	0.00	24,602	0.42
SX - 109											0	0.00	0	0	324,421	5	324,494	0.00	10,647	0.18
SX - 110											0	0.00	0	0	708,527	11	708,686	0.00	29,081	0.50
SX - 111											0	0.00	0	0	991,553	16	991,776	0.00	28,102	0.48
SX - 112											2,658	0.00	2,810	0	1,145,580	18	1,145,838	0.00	12,428	0.21
SX - 113											397,332	0.00	420,057	11	302,279	5	302,347	0.00	4,676	0.08
SX - 114											0	0.00	0	0	1,039,686	17	1,039,920	0.00	39,017	0.67
SX - 115											804,508	0.00	850,521	22	745,108	12	745,276	0.00	10,253	0.18
SY - 101																				
SY - 102																				
SY - 103																				

Table A-3. Hanford Site Underground Storage Tank Radionuclide Composition. (sheet 3 of 3)

Tank	Total (Ci)	Total (lb)	Pu239 (Ci)	Pu239 (lb)	Pu238 (Ci)	Pu238 (lb)	U238 (Ci)	U238 (lb)	U235 (Ci)	U235 (lb)	U234 (Ci)	U234 (lb)	U233 (Ci)	U233 (lb)	Th230 (Ci)	Th230 (lb)	Ra226 (Ci)	Ra226 (lb)	Pb210 (Ci)	Pb210 (lb)	Pm147 (Ci)	Pm147 (lb)	Ce144 (Ci)	Ce144 (lb)	Sr137 (Ci)	Sr137 (lb)	Cs137 (Ci)	Cs137 (lb)	Sr90 (Ci)	Sr90 (lb)	Y90 (Ci)	Y90 (lb)	Others (Ci)	Others (lb)
Totals =>	168,726,364	3,124,724	31,420	741	1,151	8.1	474	3,103,899	28.8	28,433	8.156	0.855	0.0057	0.0013											37,799,997	0.00	29,293,897	744	55,247,798	883	55,284,021	8.22	1,152,495	19.89
T - 101	54,955	315	0	0	0	0	0	312	0	2	0	0	0	0											23,894	0.00	25,260	1	2,416	0	2,417	0.00	948	0.02
T - 102	941	35	0	0	0	0	0	35	0	0	0	0	0	0											404	0.00	428	0	41	0	41	0.00	27	0.00
T - 103	45,078	126	0	0	0	0	0	125	0	1	0	0	0	0											1,942	0.00	2,053	0	28,312	0	28,317	0.00	433	0.01
T - 104	98,321	6,106	132	5	2	0	1	6,061	0	40	0	0	0	0											10,112	0.00	10,691	0	38,314	1	38,323	0.00	746	0.01
T - 105	18,046	15,680	172	6	22	8	2	15,570	0	104	0	0	0	0											0	0.00	0	0	4,669	0	4,670	0.00	511	0.01
T - 106	1,734	8,258	19	1	3	0	1	8,203	0	54	0	0	0	0											571	0.00	604	0	239	0	239	0.00	39	0.00
T - 107	68,525	2,048	46	2	0	0	0	2,032	0	14	0	0	0	0											0	0.00	0	0	33,798	1	33,797	0.00	892	0.02
T - 108	9,305	837	5	0	0	0	0	831	0	6	0	0	0	0											1,181	0.00	1,249	0	3,389	0	3,389	0.00	92	0.00
T - 109	18,368	261	1	0	0	0	0	259	0	2	0	0	0	0											4,958	0.00	5,241	0	68	0	68	0.00	32	0.00
T - 110	7,287	1,526	175	6	0	0	0	1,510	0	10	0	0	0	0											0	0.00	0	0	3,475	0	3,476	0.00	161	0.00
T - 111	6,199	4,043	117	4	1	0	1	4,013	0	26	0	0	0	0															2,946	0	2,946	0.00	188	0.00
T - 112	9,338	13,784	194	7	10	0	2	13,689	0	88	0	0	0	0											0	0.00	0	0	4,380	0	4,381	0.00	371	0.01
T - 201																																		
T - 202	1	0	0	0	0	0			0	0	0	0	0	0																			0	0.00
T - 203	7	0	3	0	0	0			0	0	0	0	0	0																			4	0.00
T - 204																																		
TX - 101	16,509	0	0	0	0	0	0	0	0	0	0	0	0	0											0	0.00	0	0	8,193	0	8,194	0.00	123	0.00
TX - 102	4,728	0	0	0	0	0	0	0	0	0	0	0	0	0											1,987	0.00	2,100	0	314	0	314	0.00	13	0.00
TX - 103	7,163	0	0	0	0	0	0	0	0	0	0	0	0	0											2,756	0.00	2,914	0	698	0	698	0.00	97	0.00
TX - 104	0	1	0	0	0	0	0	1	0	0	0	0	0	0											0	0.00	0	0	0	0	0	0.00	0	0.00
TX - 105	45,850	1	0	0	0	0	0	0	0	0	0	0	0	0											19,240	0.00	20,341	1	3,071	0	3,072	0.00	126	0.00
TX - 106	64,090	1	0	0	0	0	0	0	0	0	0	0	0	0											31,142	0.00	32,923	1	0	0	0	0.00	24	0.00
TX - 107	0	0	0	0	0	0	0	0	0	0	0	0	0	0											0	0.00	0	0	0	0	0	0.00	0	0.00
TX - 108	247,708	1,054	1	0	0	0	0	1,024	0	7	0	0	0	0											115,441	0.00	122,044	3	4,939	0	4,940	0.00	344	0.01
TX - 109	1,991,483	8,339	148	5	5	0	1	8,255	0	54	0	0	0	0											828,670	0.00	876,065	22	141,513	2	141,545	0.00	3,335	0.06
TX - 110	915,373	2,867	11	0	0	0	0	2,837	0	19	0	0	0	0											348,113	0.00	368,023	9	99,155	2	99,178	0.00	1,092	0.02
TX - 111	256,008	1,191	1	0	0	0	0	1,181	0	8	0	0	0	0											78,840	0.00	83,349	2	46,786	1	46,796	0.00	235	0.00
TX - 112	148,815	246	0	0	0	0	0	243	0	2	0	0	0	0											61,121	0.00	64,617	2	7,413	0	7,414	0.00	250	0.00
TX - 113	99,550	667,830	46	2	0	0	101	663,562	4	4,265	0	0	0	0											20,940	0.00	22,138	1	7,942	0	7,944	0.00	433	0.01
TX - 114	127,112	22,561	5	0	0	0	3	22,415	0	144	0	0	0	0											60,942	0.00	64,428	2	744	0	744	0.00	246	0.00
TX - 115	128,251	116,217	1	0	0	0	18	115,470	1	745	0	0	0	0											34,095	0.00	36,045	1	28,976	0	28,983	0.00	132	0.00
TX - 116	105,165	19,989	0	0	0	0	3	19,855	0	134	0	0	0	0											14,497	0.00	15,326	0	37,648	1	37,649	0.00	48	0.00
TX - 117	155,409	136,199	0	0	0	0	21	135,325	1	872	0	0	0	0											5,879	0.00	6,216	0	71,623	1	71,639	0.00	30	0.00
TX - 118	3,529,007	49,874	901	32	19	0	8	49,480	0	323	0	0	0	0											966,484	0.00	1,021,761	26	738,378	12	738,536	0.00	62,928	1.09
TY - 101	45,614	1,648	179	6	33	0	0	1,630	0	11	0	0	0	0											5,638	0.00	5,960	0	16,462	0	16,463	0.00	877	0.02
TY - 102	157,210	46	3	0	1	0	0	44	0	0	0	0	0	0											64,820	0.00	68,590	2	11,648	0	11,651	0.00	437	0.01
TY - 103	481,075	12,112	255	9	120	0	2	12,017	0	80	0	0	0	0											129,759	0.00	137,181	3	104,951	2	104,955	0.00	3,871	0.07
TY - 104	15,224	1,437	8	0	1	0	0	1,426	0	10	0	0	0	0											1,477	0.00	1,561	0	5,949	0	5,951	0.00	278	0.00
TY - 105	552,749	32,348	68	2	0	0	5	32,133	0	208	0	0	0	0											25,773	0.00	27,247	1	246,444	4	246,500	0.00	6,712	0.12
TY - 106	18,820	3,592	8	0	0	0	1	3,569	0	23	0	0	0	0											0	0.00	0	0	9,049	0	9,051	0.00	712	0.01
U - 101	141,442	15,782	2	0	0	0	2	15,675	0	106	0	0	0	0											55,931	0.00	59,130	2	12,900	0	12,903	0.00	375	0.01
U - 102	387,931	3	0	0	0	0	0	0	0	0	0	0	0	0											140,498	0.00	148,534	4	49,289	1	49,300	0.00	310	0.01
U - 103	51	0	0	0	0	0	0	0	0	0	0	0	0	0											23	0.00	24	0	2	0	2	0.00	0	0.00
U - 104	0	0	0	0	0	0	0	0	0	0	0	0	0	0											0	0.00	0	0	0	0	0	0.00	0	0.00
U - 105	103	73	0	0	0	0	0	72	0	0	0	0	0	0											43	0.00	46	0	3	0	3	0.00	8	0.00
U - 106	0	0	0	0	0	0	0	0	0	0	0	0	0	0											0	0.00	0	0	0	0	0	0.00	0	0.00
U - 107	314,336	3	0	0	0	0	0	0	0	0	0	0	0	0											79,198	0.00	83,728	2	73,741	1	73,757	0.00	3,912	0.07
U - 108	96,774	6,007	12	0	0	0	1	5,956	0	50	0	0	0	0											62	0.00	66	0	48,230	1	48,241	0.00	161	0.00
U - 109	41,524	141	0	0	0	0	0	140	0	1	0	0	0	0											19,330	0.00	20,435	1	857	0	857	0.00	45	0.00
U - 110	685,485	179,573	217	8	35	0	27	178,692	1	1,168	0	0	0	0											1,002	0.00	1,060	0	299,391	5	299,458	0.00	4,291	0.07
U - 111	122,608	1,847	2	0	0	0	0	1,834	0	12	0	0	0	0											21,030	0.00	22,233	1	38,507	1	38,516	0.00	1,320	0.02
U - 112	193,439	456	0	0	0	0	0	451	0	3	0	0	0	0											91,279	0.00	96,500	2	2,647	0	2,648	0.00	384	0.01
U - 201	29,730	0	0	0	0	0	0	0	0	0	0	0	0	0											14,408	0.00	15,232	0	17	0	17	0.00	57	0.00
U - 202	31,202	0	0	0	0	0	0	0	0	0	0	0	0	0											15,124	0.00	15,989	0	15	0	15	0.00	59	0.00
U - 203	27,511	0	0	0	0	0	0	0	0	0	0	0	0	0											13,334	0.00	14,097	0	14	0	14	0.00	52	0.00
U - 204	7,294	0	0	0	0	0	0	0	0	0	0	0	0	0											3,535	0.00	3,737	0	4	0	4	0.00	14	0.00

Table A-3.1. Hanford Site Underground Storage Tank Farm Radiological Characteristics.

Farm	Total		Pu239		Pu238		U238		U235		U234		U233		Th230		Ra226		Pb210		Pm147		Ce144		Cs137		Co137		Sr90		Y90		Others	
	(Ci)	(lb)	(Ci)	(lb)	(Ci)	(lb)	(Ci)	(lb)	(Ci)	(lb)	(Ci)	(lb)	(Ci)	(lb)	(Ci)	(lb)	(Ci)	(lb)	(Ci)	(lb)	(Ci)	(lb)	(Ci)	(lb)	(Ci)	(lb)	(Ci)	(lb)	(Ci)	(lb)	(Ci)	(lb)	(Ci)	(lb)
Totals =>	168,726,364	3,126,724	21,428	761	1,121	8	474	3,183,890	28	28,423	6	0	0	0											27,799,897	8	29,293,897	746	55,247,790	883	55,296,821	0	1,172,693	28
A	26,822,068	100,460	4,806	171	176	0	15	99,430	1	639	0	0	0	0											336,122	0	355,346	9	12,898,752	206	12,901,653	0	325,190	6
AN																																		
AP																																		
AW																																		
AX	17,771,931	8,583	709	25	55	0	1	8,351	0	62	0	0	0	0											126,359	0	133,586	3	8,711,608	139	8,713,568	0	86,046	1
AY																																		
AZ																																		
B	2,545,705	224,733	1,417	50	63	0	34	223,145	1	1,507	0	0	0	0											955,330	0	1,018,181	26	278,774	4	278,833	0	36,868	1
BX	27,509,213	328,449	705	25	17	0	49	318,068	2	2,061	0	0	0	0											7,012,945	0	7,414,045	189	6,501,378	104	6,502,832	0	77,249	1
BY	12,943,575	522,033	1,503	46	109	0	79	518,513	3	3,354	0	0	0	0											3,425,827	0	3,621,764	92	2,923,347	47	2,924,005	0	47,138	1
C	11,518,697	387,134	5,516	196	197	0	39	384,288	3	2,551	0	0	0	0											427,460	0	451,908	12	5,218,079	83	5,219,253	0	196,223	3
S	27,107,743	119,998	1,638	52	79	0	18	118,778	1	853	0	0	0	0											8,747,751	0	9,248,072	236	4,527,545	72	4,528,563	0	54,076	1
SX	31,121,792	108,571	2,595	92	202	0	16	107,389	1	803	0	0	0	0											3,361,569	0	3,553,831	91	11,984,598	192	11,987,294	0	231,686	4
SY																																		
T	322,085	53,021	863	31	38	0	8	52,641	0	347	0	0	0	0											43,062	0	45,525	1	114,040	2	114,063	0	4,484	0
TX	7,794,428	1,026,351	1,114	40	25	0	156	1,019,648	6	6,573	0	0	0	0											2,590,149	0	2,738,291	70	1,197,376	19	1,197,645	0	69,658	1
TY	1,270,693	51,183	521	19	154	0	8	50,819	0	332	0	0	0	0											227,526	0	240,540	6	394,484	6	394,573	0	12,888	0
U	1,998,450	284,188	234	8	36	0	31	282,819	1	1,340	0	0	0	0											454,796	0	480,808	12	525,617	8	525,736	0	11,190	0

BIBLIOGRAPHY

TANK INFORMATION

Anderson, J. D., 1990, *A History of the 200 Area Tank Farms*, WHC-MR-0132, Westinghouse Hanford Company, Richland, Washington.

WASTE VOLUMES

Hanlon, B. M., 1991, *Tank Farm Surveillance and Waste Status Report for September 1991*, WHC-EP-0182-42, Westinghouse Hanford Company, Richland, Washington.

CHEMICAL INFORMATION

DeFigh-Price, C., D. L. Merrick, R. D. Prosser, S. A. Wiegman, and R. T. Wilde, 1985, *Hanford Defense Waste Disposal Alternatives: Engineering Support Data for the Hanford Defense Waste - Environmental Impact Statement*, RHO-RE-ST-30 P, Rockwell Hanford Operations, Richland, Washington.

RADIOLOGICAL INFORMATION

Boomer, K. D., 1991, *Systems Engineering Study for the Closure of Single-Shell Tanks*, WHC-EP-0405, Vol. 1, Draft A, Westinghouse Hanford Company, Richland, Washington.

DeFigh-Price, C., D. L. Merrick, R. D. Prosser, S. A. Wiegman, and R. T. Wilde, 1985, *Hanford Defense Waste Disposal Alternatives: Engineering Support Data for the Hanford Defense Waste - Environmental Impact Statement*, RHO-RE-ST-30 P, Rockwell Hanford Operations, Richland, Washington.

This page intentionally left blank.

APPENDIX B

FERNALD ENVIRONMENTAL MANAGEMENT PROJECT

APPENDIX LEGENDS

Containment Legend

- Tank
  - Single Steel Shell (SSS)
  - Double Steel Shell (DSS)
  - Concrete (C)
  - Rubber Lined (RL)
  - Glass Lined (GL)
- Vault
  - Octagonal (O)
  - Pillar and Panel (P&P)
  - Partitioned Square (P)
  - Concrete (C)
  - Steel Liner (SL)

Construction Materials Legend

- Carbon Steel (CS)
- Stainless Steel (SS)
  - 347 (SS1)
  - 304L (SS2)
- Reinforced Concrete/Cement (RC)
- Rubber (R)
- Glass (Gl)

Radioactive Isotopes Half Lives

- ^{239}Pu 24,400 years
- ^{238}Pu 86 years
- ^{238}U 4.51×10^9 years
- ^{235}U 7.1×10^8 years
- ^{234}U 2.47×10^5 years
- ^{233}U 1.62×10^5 years
- ^{230}Th 8.0×10^4 years
- ^{226}Ra 1,600 years
- ^{210}Pb 21 years
- ^{147}Pm 2.5 years
- ^{144}Ce 284.9 days
- ^{137}Ba 2.55 minutes
- ^{137}Cs 30.23 years
- ^{90}Sr 28.1 years
- ^{90}Y 64 hours

Table B-1. Characteristics of the K-65 Residues Stored at the Fernald Environmental Management Project.

Characteristics	Silos 1 and 2				Silo 3
	Vitro (1952)	Litz (1974)	NLO (1980)	Gill (1988)	DOE (1987)
Physical					
Dry weight (kg)	1.59×10^6	--	8.79×10^6	--	--
Volume (m^3)	3,155	--	5,552	--	3,902
Density (kg/m^3)	1,179	--	--	--	--
Water content (%)	30	--	--	--	--
Radiological					
Analyte	(ppm)	(ppm)	(ppm)	(ppm)	(kg)
Radium	0.3	0.28-0.36	0.2	0.13-0.21	0.015[a]
Uranium	2,110	1,800-3,200	600	1,400-1,800	18,000
Total thorium	--	--	--	301-322	--
Chemical					
Carbonates +	--	--	--	--	--
Sulfates (%)	20	--	--	--	--
Quartz (%)	25	--	--	--	--
Muscovite (%)	60	--	--	--	--

NOTE: Data validation is currently in progress (DOE 1991).

[a]Assumes all radium in K-65 residues is ^{226}Ra with specific activity of 0.988 Ci/g.

Source: DOE 1991.

Table B-2. Radionuclide Concentrations in the Silos (1989 Sampling Program). (sheet 1 of 2)

Silo 1							
Nuclide (pCi/g)	Sample numbers						
	S1NE1A	S1NE1B	S1NE1C	S1SE1	S1SE2	S1SW1	S1NW1
^{228}Th	ND	ND	ND	ND	ND	ND	ND
^{230}Th	21,412	39,693	30,751	10,569	20,848	40,818	43,771
^{232}Th	ND	ND	ND	ND	ND	ND	766
^{226}Ra	108,100	192,600	166,400	116,800	89,280	181,200	163,300
^{228}Ra	ND	ND	ND	ND	ND	ND	ND
^{210}Pb	181,100	83,110	77,460	71,920	48,980	69,480	54,350
^{234}U	815	326	622	663	814	594	897
$^{235/236}U$	ND	ND	ND	ND	56	ND	50
^{238}U	920	398	610	545	758	532	687
U total (ppm)	2,753	1,189	1,831	1,633	2,280	1,602	2,066
Nuclide (pCi/g)	Sample numbers						
	S2SW1	S2NW1	S2NE2	S2SW2	S2NE1	S2NW2	--
^{228}Th	ND	ND	ND	411	ND	638	--
^{230}Th	31,825	32,784	8,365	29,716	40,124	25,391	--
^{232}Th	ND	ND	ND	851	ND	ND	--
^{226}Ra	145,300	61,780	657	104,900	65,520	68,310	--
^{228}Ra	ND	ND	ND	ND	ND	ND	--

Table B-2. Radionuclide Concentrations in the Silos (1989 Sampling Program) (sheet 2 of 2)

Silo 1							
Nuclide (pCi/g)	Sample numbers						
	S2SW1	S2NW1	S2NE2	S2SW2	S2NE1	S2NW2	--
^{210}Pb	141,900	145,200	87,930	77,940	150,700	399,200	--
^{234}U	859	1,107	974	121	848	1,404	--
$^{235/236}U$	ND	74	47	ND	36	70	--
^{238}U	661	1,069	874	46	814	1,240	--
U total (ppm)	1,972	3,210	2,620	137	2,437	3,717	--

NOTE: Data validation is currently in progress (DOE 1991).
ND = Not detected.
Source: DOE 1991.

Table B-3. Radionuclide Concentrations in the Silos (1989 Sampling Program). (sheet 1 of 3)

Silo 3						
Nuclide (pCi/g)	Sample Numbers					
	#21	#22	#23	#24	#25	#26
^{227}Ac	523	416	234	1,363	534	706
^{231}Pa	521	401	266	NA	556	889
^{228}Th	907	ND	554	ND	459	859
^{230}Th	41,911	33,881	21,010	71,650	40,968	41,555

Table B-3. Radionuclide Concentrations in the Silos (1989 Sampling Program). (sheet 2 of 3)

Silo 3						
Nuclide (pCi/g)	Sample Numbers					
	#21	#22	#23	#24	#25	#26
^{232}Th	1,451	ND	815	911	411	ND
^{224}Ra	453	451	64	213	295	335
^{226}Ra	2,589	2,192	467	6,435	3,073	1,862
^{228}Ra	525	559	82	ND	392	441
^{210}Pb	2,437	2,221	454	6,427	2,493	1,910
^{234}U	1,935	1,618	348	1,524	1,467	1,910
$^{235/236}U$	152	117	ND	127	54	76
^{238}U	2,043	1,649	320	1,600	1,392	1,860
U total (ppm)	4,040	4,305	738	2,595	3,064	4,554

Silo 3						
Nuclide (pCi/g)	Sample numbers					
	#27	#28	#29	#30	#33	--
^{227}Ac	421	412	443	773	566	--
^{231}Pa	458	NA	564	931	431	--
^{228}Th	ND	996	537	ND	949	--
^{230}Th	53,227	63,649	61,190	68,759	65,488	--
^{232}Th	ND	755	672	581	672	--

Table B-3. Radionuclide Concentrations in the Silos (1989 Sampling Program). (sheet 3 of 3)

Silo 3						
Nuclide (pCi/g)	Sample numbers					
	#27	#28	#29	#30	#33	--
^{224}Ra	370	106	137	449	313	--
^{226}Ra	1,518	3,702	4,169	2,240	4,451	--
^{228}Ra	325	ND	117	360	415	--
^{210}Pb	1,084	2,589	3,553	1,942	3,674	--
^{234}U	1,317	1,052	1,843	1,643	1,600	--
$^{235/236}U$	80	42	158	75	118	--
^{238}U	1,243	994	1,951	1,574	1,878	--
U total (ppm)	2,740	1,463	1,114	4,050	3,854	--

NOTE: Data validation is currently in progress (DOE 1991).
NA = Not analyzed.
ND = Not detected.
Source: DOE 1991.

Table B-4. Organics Concentrations in the Silos.

Contaminant	Silo 1	Silo 2	Silo 3
Volatile organics analysis data (ppb)			
Methylene chloride	840-4,100	1,100-6,300	1,000-2,800
Acetone	140-5,300	ND-1,600	3,400-12,000
Chloroform	480-1,500	660-1,300	560-810
2-butanone	7,100-21,000	7,800-15,000	9,700-16,000
4-methyl-2-pentanone	ND-1,400	ND-2,700	ND
Toluene	ND-430	ND-250	180-6,800
Trichloroethane	ND	ND-120	ND
Chloromethane	ND	ND	ND-140
Styrene	ND-350	ND-200	ND
Total xylenes	ND	ND-200	ND
Semivolatile organics analysis data (ppb)			
Bis (2-ethylhexyl) phthalate	93-6,000	ND-560	ND-40
Di-n-octyl phthalate	ND-820	ND	ND
Pesticide organics analysis data (ppb)			
Aroclor-1248	ND-8,000	ND	ND
Aroclor-1254	1,100-14,000	420-6,000	ND

NOTE: Data validation is currently in progress (DOE 1991).
ND = Not detected.
Source: DOE 1991.

Table B-5. Inorganics Concentrations in the Silos (1989 sampling program).

Contaminant (ppm)	Silo 1	Silo 2	Silo 3
Aluminum	60.4-1,430	464-2,570	10,800-23,700
Antimony	ND	ND-7.2	ND
Arsenic	14.7-68.4	57.5-1,960	532-6,380
Barium	1,970-7,860	89.2-8,370	118-332
Beryllium	0.88-2.8	0.66-6.0	10.0-39.9
Cadmium	2.1-8.0	3.4-19.1	21.5-204
Calcium	2,150-5,700	2,430-301,000	21,300-39,900
Chromium	21.0-165	12.9-68.8	139-560
Cobalt	349-1,260	6.2-2,430	ND-3,520
Copper	122-473	ND-1,790	1,610-7,060
Iron	4,340-75,100	4,010-37,800	13,900-67,600
Lead	35,800-85,100	153-29,800	646-4,430
Magnesium	1,500-6,020	1,520-8,740	38,200-80,900
Manganese	33.5-257	74.2-403	2,420-6,500
Mercury	0.23-2.8	ND-2.3	ND-0.69
Nickel	629-2,580	14.6-2,200	1,200-6,170
Potassium	158-492	37.8-289	1,300-22,800
Selenium	106-180	ND-118	101-349
Silver	5.0-23.3	ND-22.8	9.2-23.8
Sodium	360-13,100	226-4,070	22,900-51,700
Thallium	ND-0.52	ND-1.4	3.1-73.9
Vanadium	72.2-240	21.9-214	418-4,550
Zinc	14.4-212	11.2-154	301-672
Cyanide	0.52-4.4	ND-4.5	ND

NOTE: Data validation is currently in progress.
ND = Not detected.
Source: DOE 1991.

Table B-6. EP Toxic Metals Range of Values for K-65 and Metal Oxide Silos (1989 sampling program).

Analyte (ppm)	Silo 1	Silo 2	Silo 3	Maximum allowable concentration
Arsenic	ND-0.484	0.163-0.592	ND-41.5	5.0
Barium	0.079-14.5	0.095-2.62	0.020-0.156	100.0
Cadmium	ND-0.100	0.017-0.278	0.108-6.32	1.0
Chromium	0.020-0.964	ND-1.02	0.336-11.9	5.0
Lead	0.159-904	0.155-714	ND-1.01	5.0
Selenium	0.217-0.997	0.240-1.56	0.92-11.7	1.0
Silver	ND-0.121	ND-0.213	ND-0.032	5.0
Mercury	ND	ND	ND-0.003	0.2

NOTE: Data validation is currently in progress.
ND = Not detected.
Source: DOE 1991.

Table B-7. Geotechnical Analytical Results (1989 sampling plan).

Sample ID	Color	Water content (%)	Specific gravity	Liquid limit	Plastic limit	Plasticity index	200 Sieve (percent finer)
S1-NE-1A	Dark brown	50.7	3.19	55.2	50.0	5.2	72.7
S1-NE-1C	Light brown	71.5	2.74	70.3	66.6	3.7	71.5
S1-SE-2T	Sandy brown	31.9	3.37	NP	NP	NP	43.9
S1-Compos.	NA	22.8	2.58	NP	NP	NP	54.5
S2-NW-1A	Brown	25.9	2.87	NP	NP	NP	39.8
S2-NE-2BT	White	21.8	2.59	NP	NP	NP	51.9
S2-SW-1A	Black	73.5	3.11	NP	NP	NP	63.3
S2-Compos.	NA	34.2	2.78	NP	NP	NP	38.1
S3-NW-1A	Reddish brown	7.4	2.35	NP	NP	NP	93.2
S3-NW-1C	Brown	3.7	2.08	NP	NP	NP	93.9
S3-SE-1A	Reddish brown	10.2	2.58	NP	NP	NP	90.0
S3-SE-1C	Dark brown	6.3	2.29	NP	NP	NP	92.9
S3-Compos.	NA	3.8	2.75	NP	NP	NP	87.8

NOTE: Data validation is in progress (DOE 1991).
NA = Not applicable.
NP = Non plastic.
Source: DOE 1991.

This page intentionally left blank.

Table B-8. Fernald Environmental Management Project Underground Storage Tank Physical Characteristics.

Average Densities	
	17.1 lb/gal for Sludge
	8.4 lb/gal for Powder

Tank	Underground Storage Tank Description										Underground Storage Tank Waste Description																		
	Type	Status	Location	Containment		Service	Construction Materials		Cooling Coils	Operating Capacity	Total Waste		% of Operating Capacity	Liquid		Sludge		Salt Cake		Slurry		Powder		Temp.	Estimated Leakage		Heat Output		Remarks
				Tank	Vault		Tank	Vault		(gal)	(gal)	(lb)		(gal)	(lb)	(gal)	(lb)	(gal)	(lb)	(gal)	(lb)	(gal)	(lb)	(F)	(gal)	(Curies)	(Btu/hr)	(Btu/hr per ton)	
Totals =>										4,800,000	2,344,000	39,498,000	59.3%			1,794,000	30,678,000					1,050,000	8,820,000						
Silo 1	A	Inactive	FEMP	C		1952	RC		No	1,200,000	897,000	15,339,000	74.8%			897,000	15,339,000												
Silo 2	A	Inactive	FEMP	C		1952	RC		No	1,200,000	897,000	15,339,000	74.8%			897,000	15,339,000												
Silo 3	B	Inactive	FEMP	C		1952	RC		No	1,200,000	1,050,000	8,820,000	87.5%									1,050,000	8,820,000						
Silo 4	B	Inactive	FEMP	C		1952	RC		No	1,200,000																			Empty, Never Stored Waste

Table B-9. Fernald Environmental Management Project Underground Storage Tank Chemical Characteristics (pounds).

Tank (Site)	Total	Total (Dry)	H2O	pH	Organics	Anions								Cations													Others
						CO3	Cl	F	OH	NO3	NO2	PO4	SO4	Al	Ba	Ca	Cr	Fe	Pb	Mg	Ni	K	Se	Si	Ag	Na	
	39,498,000	24,808,000	14,690,000											161,000	77,100	1,667,000	3,930	822,000	630,000	611,000	64,300	102,800	3,460		350	426,000	20,239,060
			37.2%											0.4%	0.2%	4.2%	0.0%	2.1%	1.6%	1.5%	0.2%	0.3%	0.0%		0.0%	1.1%	51.2%
1	15,339,000	7,455,000	7,884,000											5,600	36,600	29,000	690	296,000	451,000	28,000	23,900	2,400	1,070		110	100,000	6,480,630
2	15,339,000	9,142,000	6,197,000											13,800	38,700	1,387,000	370	191,000	137,000	94,000	10,100	1,500	540		100	20,000	7,247,890
3	8,820,000	8,211,000	609,000											141,600	1,800	251,000	2,870	335,000	42,000	489,000	30,300	98,900	1,850		140	306,000	6,510,540
4																											

Table B-10. Fernald Environmental Management Project Underground Storage Tank Radiological Characteristics.

Tank	Total		Pu239		Pu238		U238		U235		U234		U233		Th230		Ra226		Pb210		Pm147		Ce144		Ba137		Cs137		Sr90		Y90		Others	
(Silo)	(Ci)	(lb)	(Ci)	(lb)	(Ci)	(lb)	(Ci)	(lb)	(Ci)	(lb)	(Ci)	(lb)	(Ci)	(lb)	(Ci)	(lb)	(Ci)	(lb)	(Ci)	(lb)	(Ci)	(lb)	(Ci)	(lb)	(Ci)	(lb)	(Ci)	(lb)	(Ci)	(lb)	(Ci)	(lb)	(Ci)	(lb)
	2,223	72,612					11.0	72,000	0.548	560	11.47	4.09			410	46.5	810	1.80	980	0.0266														
1	874	14,163					2.2	14,100	0.051	50	2.29	0.81			100	11.3	490	1.09	280	0.0076														
2	1,127	21,476					3.3	21,300	0.158	160	3.68	1.31			120	13.6	310	0.69	690	0.0187														
3	221	36,974					5.6	36,600	0.339	350	5.51	1.96			190	21.5	10	0.02	10	0.0003														
4																																		

BIBLIOGRAPHY

DOE, 1991, *Treatability Study Work Plan for the Vitrification of Residues from Silos 1, 2, and 3*, U.S. Department of Energy, Fernald Office, Fernald, Ohio.

This page intentionally left blank.

APPENDIX C

IDAHO NATIONAL ENGINEERING LABORATORY TANK DATA

APPENDIX LEGENDS

Containment Legend

- Tank
  - Single Steel Shell (SSS)
  - Double Steel Shell (DSS)
  - Concrete (C)
  - Rubber Lined (RL)
  - Glass Lined (GL)
- Vault
  - Octagonal (O)
  - Pillar and Panel (P&P)
  - Partitioned Square (P)
  - Concrete (C)
  - Steel Liner (SL)

Construction Materials Legend

- Carbon Steel (CS)
- Stainless Steel (SS)
  - 347 (SS1)
  - 304L (SS2)
- Reinforced Concrete/Cement (RC)
- Rubber (R)
- Glass (Gl)

Radioactive Isotopes Half Lives

- ^{239}Pu 24,400 years
- ^{238}Pu 86 years
- ^{238}U 4.51×10^9 years
- ^{235}U 7.1×10^8 years
- ^{234}U 2.47×10^5 years
- ^{233}U 1.62×10^5 years
- ^{230}Th 8.0×10^4 years
- ^{226}Ra 1,600 years
- ^{210}Pb 21 years
- ^{147}Pm 2.5 years
- ^{144}Ce 284.9 days
- ^{137}Ba 2.55 minutes
- ^{137}Cs 30.23 years
- ^{90}Sr 28.1 years
- ^{90}Y 64 hours

Table C-1. Idaho National Engineering Laboratory Underground Storage Tank Physical Characteristics.

Assumed Densities	
	9.4 lb/gal for Zirconium
	10.1 lb/gal for Aluminum
	10.2 lb/gal for Sodium

Tank	Underground Storage Tank Description: Type	Status	Location	Containment: Tank	Containment: Vault	Service	Construction Materials		Cooling Coils	Operating Capacity (gal)	Underground Storage Tank Waste Description: Total Waste (gal)	Total Waste (lb)	% of Operating Capacity	Liquid (gal)	Liquid (lb)	Sludge (gal)	Sludge (lb)	Salt Cake (gal)	Salt Cake (lb)	Slurry (gal)	Slurry (lb)	Powder (gal)	Powder (lb)	Temp. (F)	Estimated Leakage (gal)	Estimated Leakage (Ci)	Heat Output (Btu/hr)	Heat Output (Btu/hr per ton)	Remarks
Totals =>										3,336,000	2,592,000	23,410,000	64.7%	2,592,000	23,410,000												74,300	6.3	
WM - 180	A	Active	ICPP	SSS	O	1952	SS1	RC	Yes	318,000	147,000	1,500,000	46.2%	147,000	1,500,000												1,900	2.5	Sodium Waste
WM - 181	A	Active	ICPP	SSS	O	1952	SS1	RC	No	318,000	279,000	2,850,000	87.7%	279,000	2,850,000												3,600	2.5	Sodium Waste
WM - 182	B1	Active	ICPP	SSS	P&P	1955	SS2	RC	Yes	300,000	279,000	2,850,000	93.0%	279,000	2,850,000												28,900	20.3	Aluminum Waste
WM - 183	B1	Active	ICPP	SSS	P&P	1955	SS2	RC	Yes	300,000	279,000	2,850,000	93.0%	279,000	2,850,000												3,600	2.5	Sodium Waste
WM - 184	B1	Active	ICPP	SSS	P&P	1955	SS2	RC	No	300,000	277,000	2,830,000	92.3%	277,000	2,830,000												3,600	2.5	Sodium Waste
WM - 185	B1	Active	ICPP	SSS	P&P	1957	SS2	RC	Yes	300,000	282,000	2,880,000	94.0%	282,000	2,880,000												3,600	2.5	Sodium Waste
WM - 186	B1	Active	ICPP	SSS	P&P	1957	SS2	RC	No	300,000	249,000	2,540,000	83.0%	249,000	2,540,000												3,200	2.5	Sodium Waste
WM - 187	B2	Active	ICPP	SSS	P	1959	SS2	RC	Yes	300,000	179,000	1,830,000	59.7%	179,000	1,830,000												9,300	10.2	Zirconium Waste
WM - 188	B2	Active	ICPP	SSS	P	1959	SS2	RC	Yes	300,000	192,000	1,960,000	64.0%	192,000	1,960,000												9,900	10.1	Zirconium Waste
WM - 189	B2	Active	ICPP	SSS	P	1964	SS2	RC	Yes	300,000	129,000	1,320,000	43.0%	129,000	1,320,000												6,700	10.2	Zirconium Waste
WM - 190	B2	Active	ICPP	SSS	P	1964	SS2	RC	Yes	300,000	Empty			Empty															Spare

Table C-2. Idaho National Engineering Laboratory Underground Storage Tank Chemical Characteristics (pounds).

Tank	Total	Total (Dry)	H2O	pH	Organics	Anions								Cations													Others
						CO3	Cl	F	OH	NO3	NO2	PO4	SO4	Al	Ba	Ca	Cr	Fe	Pb	Mg	Ni	K	Se	Si	Ag	Na	
Totals =>	23,410,000	6,242,500	17,167,500				25,500	311,900		4,543,200			158,000	266,400		23,200	1,500	14,300		1,300	800	24,900				508,500	362,500
			73.3%				0.1%	1.3%		19.4%			0.7%	1.1%		0.1%	0.0%	0.1%		0.0%	0.0%	0.1%				2.2%	1.5%
WM-180	1,500,000	406,500	1,093,500	<<1			2,400	500		320,300			6,000	18,000		1,500		800				1,500				45,800	9,700
WM-181	2,850,000	772,300	2,077,700	<<1			4,600	900		608,500			11,400	34,200		2,900		1,400				2,900				86,900	18,600
WM-182	2,850,000	829,300	2,020,700	<<1			700	900		658,400			18,500	43,000		7,700	1,000	5,400		1,800	500	9,400				37,300	44,700
WM-183	2,850,000	772,300	2,077,700	<<1			4,600	900		608,500			11,400	34,200		2,900		1,400				2,900				86,900	18,600
WM-184	2,830,000	766,900	2,063,100	<<1			4,500	900		604,200			11,300	34,000		2,800		1,400				2,800				86,300	18,700
WM-185	2,880,000	780,500	2,099,500	<<1			4,600	900		614,900			11,500	34,600		2,900		1,400				2,900				87,800	19,000
WM-186	2,540,000	688,300	1,851,700	<<1			4,100	800		542,300			10,200	30,500		2,500		1,300				2,500				77,500	16,600
WM-187	1,830,000	439,200	1,390,800	<<1				109,600		209,900			27,800	13,600			200	400			100						77,600
WM-188	1,960,000	470,400	1,489,600	<<1				117,400		224,800			29,800	14,500			200	500			100						83,100
WM-189	1,320,000	316,800	1,003,200	<<1				79,100		151,400			20,100	9,800			100	300			100						55,900
WM-190																											

Table C-3. Idaho National Engineering Laboratory Underground Storage Tank Radiological Characteristics.

Tank	Total		Pu239		Pu238		U238		U235		U234		U233		Th230		Ra226		Pm147		Ce144		Ba137		Cs137		Sr90		Y90		Others	
	(Ci)	(lb)	(Ci)	(lb)	(Ci)	(lb)	(Ci)	(lb)	(Ci)	(lb)	(Ci)	(lb)	(Ci)	(lb)	(Ci)	(lb)	(Ci)	(lb)	(Ci)	(lb)	(Ci)	(lb)	(Ci)	(lb)	(Ci)	(lb)	(Ci)	(lb)	(Ci)	(lb)	(Ci)	(lb)
Totals =>	37,358,600	6,080	149,400	5,309																	667,200	0.462			19,697,000	502	16,845,000	249.3				
WM-180	1,021,400	426	11,400	405																	17,000	0.012			539,000	13.73	454,000	7.3				
WM-181	1,942,000	808	21,600	768																	32,400	0.022			1,025,000	26.11	863,000	13.8				
WM-182	14,607,500	1,444	32,400	1,151																	453,100	0.314			7,023,000	178.88	7,099,000	113.5				
WM-183	1,942,000	808	21,600	768																	32,400	0.022			1,025,000	26.11	863,000	13.8				
WM-184	1,928,500	800	21,400	760																	32,100	0.022			1,018,000	25.93	857,000	13.7				
WM-185	1,962,500	815	21,800	775																	32,700	0.023			1,036,000	26.39	872,000	13.9				
WM-186	1,730,000	718	19,200	682																	28,800	0.020			913,000	23.25	769,000	12.3				
WM-187	4,377,900	94																			13,900	0.010			2,549,000	64.92	1,815,000	29.0				
WM-188	4,688,800	101																			14,800	0.010			2,730,000	69.53	1,944,000	31.1				
WM-189	3,158,000	68																			10,000	0.007			1,839,000	46.84	1,309,000	20.9				
WM-190																																

APPENDIX D

OAK RIDGE NATIONAL LABORATORY TANK DATA

APPENDIX LEGENDS

Containment Legend

- Tank
  - Single Steel Shell (SSS)
  - Double Steel Shell (DSS)
  - Concrete (C)
  - Rubber Lined (RL)
  - Glass Lined (GL)
- Vault
  - Octagonal (O)
  - Pillar and Panel (P&P)
  - Partitioned Square (P)
  - Concrete (C)
  - Steel Liner (SL)

Construction Materials Legend

- Carbon Steel (CS)
- Stainless Steel (SS)
  - 347 (SS1)
  - 304L (SS2)
- Reinforced Concrete/Cement (RC)
- Rubber (R)
- Glass (Gl)

Radioactive Isotopes Half Lives

- ^{239}Pu 24,400 years
- ^{238}Pu 86 years
- ^{238}U 4.51×10^9 years
- ^{235}U 7.1×10^8 years
- ^{234}U 2.47×10^5 years
- ^{233}U 1.62×10^5 years
- ^{230}Th 8.0×10^4 years
- ^{226}Ra 1,600 years
- ^{210}Pb 21 years
- ^{147}Pm 2.5 years
- ^{144}Ce 284.9 days
- ^{137}Ba 2.55 minutes
- ^{137}Cs 30.23 years
- ^{90}Sr 28.1 years
- ^{90}Y 64 hours

Table D-1. Oak Ridge National Laboratory Active Tanks Chemical and Radiological Sample Results (Tanks W-21, -23, -24, -25, -26, -27, -28, and -31). (sheet 1 of 2)

Characteristic		W21-L2	W23-L1	W24-L2	W25-L2
Physical properties and miscellaneous data					
TDS	(mg/mL)	393	381	377	348
TS	(mg/mL)	421	383	383	334
Density	(g/mL)	1.2391	1.2423	1.2348	1.2018
IC	(mg/L)	<1.0	8340	1910	15.8
TC	(mg/L)	571	9500	2400	478
TOC	(mg/L)	571	1160	489	462
RCRA metals					
Ag	(mg/L)	1.2	<0.44	<0.69	<0.69
As	(mg/L)	3.8	<3.0	<3.7	<3.7
Ba	(mg/L)	25	<0.19	0.29	3.2
Cd	(mg/L)	2.0	1.7	0.22	<0.12
Cr	(mg/L)	27	0.42	3.1	1.9
Hg	(mg/L)	0.92	0.07	0.046	0.054
Ni	(mg/L)	15	3.0	<0.38	0.45
Pb	(mg/L)	7.1	2.7	6.7	<2.1
Se	(mg/L)	<2.3	<2.3	<4.7	<4.7
Tl	(mg/L)	<0.94	<0.94	<1.4	<1.4
Process metals					
Al	(mg/L)	<1.2	1.8	46	<4.2
B	(mg/L)	1.0	10	0.95	0.60
Ca	(mg/L)	23000	18	7.2	280
Co	(mg/L)	-	-	<0.57	<0.57
Fe	(mg/L)	240	0.70	<2.6	<2.6
K	(mg/L)	20000	78000	11000	17000
Mg	(mg/L)	5600	3.4	<1.3	<1.3
Na	(mg/L)	61000	82000	100000	78000
Si	(mg/L)	<1	<1	245	<1
Sr	(mg/L)	160	0.40	<0.74	23
Th	(mg/L)	95.1	15.8	<2.2	<2.2
U	(mg/L)	750	17	9.4	<0.10
Anions					
Chloride	(M)	0.059	0.10	0.073	0.071
Fluoride	(M)	<0.053	<0.053	<0.026	<0.026
Nitrate	(M)	5.0	3.23	4.19	4.19
Phosphate	(M)	<0.053	<0.053	<0.053	<0.053
Sulfate	(M)	<0.052	0.081	<0.052	<0.052
Alkalinity					
pH		0.56	12.8	13.1	12.5
H^+	(M)	0.085	-	-	-
OH^-	(M)	-	0.15	0.29	0.06
CO_3^{2-}	(M)	-	0.70	0.15	<0.01
HCO_3^-	(M)	-	-	<0.01	<0.01
Beta/gamma emitters					
Gross alpha	(Bq/mL)	2.14e+03	8.20e+01	5.00e+00	2.00e+00
Gross beta	(Bq/mL)	4.99e+05	4.62e+05	2.30e+05	3.92e+05
^{14}C	(Bq/mL)	<1.0e+00	6.35e+01	7.87e+02	3.29e+02
^{144}Ce	(Bq/mL)	<1.5e+03	<1.6e+03	<7.4e+02	<1.3e+03
^{60}Co	(Bq/mL)	8.50e+03	6.21e+02	3.29e+02	1.38e+03
^{134}Cs	(Bq/mL)	5.12e+03	4.63e+03	1.34e+03	3.77e+03
^{137}Cs	(Bq/mL)	3.19e+05	4.36e+05	2.21e+05	3.27e+05
^{152}Eu	(Bq/mL)	3.31e+04	<2.1e+02	<3.2e+02	<1.6e+02
^{154}Eu	(Bq/mL)	1.66e+04	<1.6e+02	<6.0e+01	<1.2e+02
^{155}Eu	(Bq/mL)	5.22e+03	<8.5e+02	<4.0e+02	<6.9e+02
^{3}H	(Bq/mL)	3.50e+02	1.19e+02	3.08e+02	3.45e+02
^{95}Nb	(Bq/mL)	<1.5e+02	<1.0e+02	<2.8e+02	<6.3e+01
^{106}Ru	(Bq/mL)	1.95e+03	3.78e+03	<1.1e+03	<1.9e+03
^{90}Sr	(Bq/mL)	7.46e+04	4.12e+02	9.13e+02	1.95e+04
^{95}Zr	(Bq/mL)	<7.1e+03	<1.0e+02	<5.0e+02	<1.2e+02
Alpha emitters					
^{234}U	(Bq/mL)	6.80e+01	4.00e+00	-	-
^{233}U	(Bq/mL)	3.96e+02	6.00e+00	-	-
$^{239}Pu/^{240}Pu$	(Bq/mL)	6.20e+01	6.00e+00	-	-
$^{238}Pu/^{241}Am$	(Bq/mL)	2.61e+02	3.90e+01	-	-
^{244}Cm	(Bq/mL)	1.15e+03	4.00e+00	-	-

Table D-1. Oak Ridge National Laboratory Active Tanks Chemical and Radiological Sample Results (Tanks W-21, -23, -24, -25, -26, -27, -28, and -31). (sheet 2 of 2)

Characteristic		W26-L2	W27-L2	W28-L2	W31-L2
Physical properties and miscellaneous data					
TDS	(mg/mL)	369	358	485	351
TS	(mg/mL)	366	355	478	349
Density	(g/mL)	1.2177	1.2118	1.2852	1.2075
IC	(mg/L)	2580	4.7	7.0	18.9
TC	(mg/L)	3860	364	581	464
TOC	(mg/L)	1280	359	574	445
RCRA metals					
Ag	(mg/L)	1.2	<0.69	<0.69	<0.69
As	(mg/L)	<3.7	<3.7	<3.7	<3.7
Ba	(mg/L)	0.20	4.1	5.8	3.5
Cd	(mg/L)	4.5	0.12	0.51	<0.12
Cr	(mg/L)	1.8	2.8	0.38	6.0
Hg	(mg/L)	<0.08	<0.048	0.14	0.15
Ni	(mg/L)	8.2	<0.38	1.4	<0.38
Pb	(mg/L)	3.2	<2.1	<2.1	<2.1
Se	(mg/L)	<4.7	<4.7	<4.7	<4.7
Tl	(mg/L)	<1.4	<1.4	<1.4	<1.4
Process metals					
Al	(mg/L)	4.8	<4.2	5.2	4.2
B	(mg/L)	3.9	0.67	0.35	0.20
Ca	(mg/L)	20	2600	7800	79
Co	(mg/L)	<0.57	<0.57	<0.57	<0.57
Fe	(mg/L)	<2.6	<2.6	<2.6	<2.6
K	(mg/L)	51000	8500	26000	9500
Mg	(mg/L)	3.5	<1.3	1600	<1.3
Na	(mg/L)	68000	90000	96000	94000
Si	(mg/L)	11.9	<1.0	<1.0	8.57
Sr	(mg/L)	<0.74	18	65	12
Th	(mg/L)	10	<2.2	<2.2	<2.2
U	(mg/L)	1130	<0.1	<0.1	0.25
Anions					
Chloride	(M)	0.099	0.071	0.14	0.073
Fluoride	(M)	<0.026	<0.026	<0.026	<0.026
Nitrate	(M)	3.29	4.52	5.97	4.52
Phosphate	(M)	<0.053	<0.053	<0.053	<0.053
Sulfate	(M)	<0.052	<0.052	<0.052	<0.052
Alkalinity					
pH		11.2	11.8	9.1	11.7
OH^-	(M)	<0.01	0.01	<0.01	0.01
CO_3^{2-}	(M)	0.20	<0.01	<0.01	<0.01
HCO_3^-	(M)	0.02	<0.01	<0.01	<0.01
Beta/gamma emitters					
Gross alpha	(Bq/mL)	1.03e+03	<1.0e+00	4.40e+01	<1.0e+00
Gross beta	(Bq/mL)	2.20e+06	3.30e+05	9.80e+05	3.58e+05
^{14}C	(Bq/mL)	1.23e+02	1.81e+02	1.67e+02	1.12e+02
^{144}Ce	(Bq/mL)	<2.3e+03	<7.5e+02	<1.8e+03	<7.8e+02
^{60}Co	(Bq/mL)	1.22e+04	3.09e+02	8.72e+03	3.23e+02
^{134}Cs	(Bq/mL)	1.31e+04	1.61e+03	1.06e+04	5.01e+03
^{137}Cs	(Bq/mL)	2.07e+06	2.16e+05	5.66e+05	2.29e+05
^{152}Eu	(Bq/mL)	<2.1e+02	<1.1e+02	1.67e+03	<9.3e+01
^{154}Eu	(Bq/mL)	<2.4e+02	<6.6e+01	7.37e+02	<6.7e+01
^{155}Eu	(Bq/mL)	<1.2e+03	<4.0e+02	<9.3e+02	<4.2e+02
^{3}H	(Bq/mL)	6.18e+02	2.09e+02	1.19e+02	1.56e+02
^{95}Nb	(Bq/mL)	<1.4e+02	<3.0e+01	<1.2e+02	<3.3e+01
^{106}Ru	(Bq/mL)	<2.8e+03	<1.1e+03	3.02e+03	<1.1e+03
^{90}Sr	(Bq/mL)	4.90e+02	5.57e+04	1.75e+05	7.38e+04
^{95}Zr	(Bq/mL)	<2.7e+02	<5.2e+01	<2.2e+02	<5.7e+01
Alpha emitters					
^{232}U	(Bq/mL)	3.60e+01	-	-	-
^{233}U	(Bq/mL)	9.20e+02	-	-	-
^{238}U	(Bq/mL)	1.00e+01	-	-	-
$^{239}Pu/^{240}Pu$	(Bq/mL)	1.00e+01	-	-	-
$^{238}Pu/^{241}Am$	(Bq/mL)	<1.5e+01	-	-	-

Table D-2. Oak Ridge National Laboratory Active Tanks Chemical and Radiological Liquid Sample Results (Tanks W-29 and -30).

Characteristic		W29-L1	W29-L2	W29-L4	W30-L1	W30-L2	W30-L4
Physical properties and miscellaneous data							
TDS	(mg/mL)	375	376	375	371	377	370
TS	(mg/mL)	377	379	382	396	391	374
Density	(g/mL)	1.2251	1.2277	1.2254	1.2225	1.2218	1.2211
IC	(mg/L)	478	477	456	602	596	600
TC	(mg/L)	985	1040	833	805	695	799
TOC	(mg/L)	507	563	377	203	99	199
RCRA metals							
Ag	(mg/L)	<0.69	<0.69	<0.69	<0.69	<0.69	<0.69
As	(mg/L)	<3.7	<3.7	<3.7	<3.7	<3.7	<3.7
Ba	(mg/L)	1.0	1.1	1.0	0.80	0.84	0.79
Cd	(mg/L)	<0.12	<0.12	<0.12	<0.12	<0.12	<0.12
Cr	(mg/L)	2.4	2.4	2.3	3.0	2.9	2.9
Hg	(mg/L)	0.09	0.08	0.09	0.10	0.10	0.10
Ni	(mg/L)	<0.38	<0.38	<0.38	<0.38	<0.38	<0.38
Pb	(mg/L)	<2.1	<2.1	2.3	3.0	2.9	2.3
Se	(mg/L)	<4.7	<4.7	<4.7	<4.7	<4.7	<4.7
Tl	(mg/L)	<1.4	<1.4	<1.4	<1.4	<1.4	<1.4
Process metals							
Al	(mg/L)	18	18	17	34	33	34
B	(mg/L)	0.50	0.47	0.36	0.49	0.42	0.42
Ca	(mg/L)	4.1	5.5	3.6	10	9.4	11
Fe	(mg/L)	<2.6	<2.6	<2.6	<2.6	<2.6	<2.6
K	(mg/L)	10000	10000	10000	9200	9300	9400
Mg	(mg/L)	<1.3	<1.3	<1.3	<1.3	<1.3	<1.3
Na	(mg/L)	110000	110000	110000	100000	100000	110000
Si	(mg/L)	<1.0	<1.0	<1.0	<1.0	<1.0	<1.0
Sr	(mg/L)	1.9	2.1	1.9	1.7	1.8	1.9
Th	(mg/L)	<1.0	<1.0	<1.0	<1.0	<1.0	<1.0
U	(mg/L)	4.5	4.3	4.3	5.5	5.8	5.9
Anions							
Chloride	(M)	0.082	0.078	0.082	0.078	0.082	0.078
Fluoride	(M)	<0.026	<0.026	<0.026	<0.026	<0.026	<0.026
Nitrate	(M)	4.52	4.52	4.52	4.35	4.35	4.35
Phosphate	(M)	<0.053	<0.053	<0.053	<0.053	<0.053	<0.053
Sulfate	(M)	<0.052	<0.052	<0.052	<0.052	<0.052	<0.052
Alkalinity							
pH		13.0	13.0	13.0	13.2	13.3	13.3
OH^-	(M)	0.064	0.069	0.074	0.13	0.13	0.13
CO_3^{2-}	(M)	0.043	0.040	0.054	0.054	0.052	0.052
HCO_3^-	(M)	<0.01	<0.01	<0.01	<0.01	<0.01	<0.01
Beta/gamma emitters							
Gross alpha	(Bq/mL)	<1.0e+01	<1.0e+01	<1.0e+01	<1.0e+01	<1.0e+01	<1.0e+01
Gross beta	(Bq/mL)	2.11e+05	1.98e+05	2.09e+05	1.97e+05	1.93e+05	1.92e+05
^{14}C	(Bq/mL)	1.43e+02	7.3e+01	5.6e+01	6.8e+01	8.6e+01	1.10e+02
^{144}Ce	(Bq/mL)	<1.4e+03	<1.3e+03	<1.3e+03	<1.2e+03	<1.2e+03	<1.3e+03
^{60}Co	(Bq/mL)	6.44e+02	5.99e+02	6.26e+02	4.93e+02	4.83e+02	4.91e+02
^{134}Cs	(Bq/mL)	2.51e+03	2.57e+03	2.53e+03	2.05e+03	2.03e+03	1.96e+03
^{137}Cs	(Bq/mL)	2.21e+05	2.22e+05	2.16e+05	1.86e+05	1.87e+05	1.90e+05
^{152}Eu	(Bq/mL)	<1.6e+02	<2.0e+02	<2.7e+02	<1.7e+02	<2.2e+02	<2.1e+02
^{154}Eu	(Bq/mL)	<1.5e+02	<1.6e+02	<1.2e+02	<1.5e+02	<1.1e+02	<1.0e+02
^{155}Eu	(Bq/mL)	<7.2e+02	<7.1e+02	<7.2e+02	<6.7e+02	<6.6e+02	<6.6e+02
^{3}H	(Bq/mL)	2.01e+02	2.01e+02	2.01e+02	2.04e+02	2.01e+02	2.01e+02
^{95}Nb	(Bq/mL)	<6.4e+01	<6.2e+01	<6.3e+02	<5.1e+01	<5.5e+01	<5.8e+01
^{106}Ru	(Bq/mL)	<2.1e+03	<2.0e+03	<2.0e+03	<1.9e+03	<1.9e+03	<1.9e+03
^{90}Sr	(Bq/mL)	7.13e+03	7.00e+03	7.11e+03	6.75e+03	6.70e+03	6.70e+03
^{95}Zr	(Bq/mL)	<9.3e+01	<1.1e+02	<1.0e+02	<9.5e+01	<1.1e+02	<9.3e+01

Table D-3. Oak Ridge National Laboratory Active Tanks Chemical and Radiological Sludge Sample Results (Tanks W-21, -23, -25, -26, -27, -28, and -31). (sheet 1 of 2)

Characteristic		W21-S	W23-S	W24-S	W25-S	W26-S
Physical properties and miscellaneous data						
TS	(mg/g)	511	544	487	531	449
Density	(g/mL)	1.40	1.34	1.26	1.32	1.54
IC	(mg/kg)	12000	18100	6630	3920	12000
TC	(mg/kg)	18500	22200	9570	6250	18200
TOC	(mg/kg)	6480	4120	2940	2330	6220
RCRA metals						
Ag	(mg/kg)	(50)	(28)	(<7.7)	(<7.6)	(30)
As	(mg/kg)	(42)	(<50)	<42	<41	65
Ba	(mg/kg)	78	63	44	59	87
Cd	(mg/kg)	27	32	6.1	11	42
Cr	(mg/kg)	160	190	36	59	170
Hg	(mg/kg)	56	19	26	37	64
Ni	(mg/kg)	75	110	22	34	92
Pb	(mg/kg)	290	(450)	150	220	470
Se	(mg/kg)	<25	<39	<52	<51	<55
Tl	(mg/kg)	<10	<16	<16	<16	<17
Process metals						
Al	(mg/kg)	1000	2800	1600	2800	7500
B	(mg/kg)	<6.6	<10	3.1	<1.5	<7.3
Ca	(mg/kg)	45000	55000	29000	38000	36000
Cs	(mg/kg)	-	-	<1.3	<1.3	-
Fe	(mg/kg)	2300	1900	600	940	2300
K	(mg/kg)	8500	18000	7600	9200	15000
Mg	(mg/kg)	9600	16000	5600	5900	11000
Na	(mg/kg)	48000	82000	69000	66000	51000
Sr	(mg/kg)	200	290	110	150	120
Th	(mg/kg)	13700	12000	1480	3860	9360
U	(mg/kg)	31000	17000	3700	4800	24100
Beta/gamma emitters						
Gross alpha	(Bq/g)	1.29e+05	2.23e+05	2.34e+04	4.65e+04	9.13e+04
Gross beta	(Bq/g)	3.36e+06	6.67e+06	2.62e+06	4.00e+06	5.70e+06
^{14}C	(Bq/g)	1.80e+02	3.65e+02	8.43e+02	1.71e+02	2.13e+02
^{144}Ce	(Bq/g)	<2.8e+04	<2.7e+04	<3.9e+03	<4.2e+03	<1.2e+04
^{60}Co	(Bq/g)	8.07e+04	2.52e+05	3.39e+04	4.03e+04	1.03e+05
^{134}Cs	(Bq/g)	6.99e+03	<6.5e+03	<6.2e+02	7.07e+02	2.97e+03
^{137}Cs	(Bq/g)	2.49e+05	4.95e+05	1.96e+05	2.21e+05	6.84e+05
^{152}Eu	(Bq/g)	1.30e+06	7.22e+05	6.20e+04	8.14e+04	4.92e+05
^{154}Eu	(Bq/g)	4.77e+05	5.14e+05	3.60e+04	5.06e+04	3.19e+05
^{155}Eu	(Bq/g)	1.33e+05	1.21e+05	1.03e+04	1.63e+04	7.51e+04
^{95}Nb	(Bq/g)	<4.7e+03	<7.0e+03	<5.6e+02	<5.9e+02	<2.6e+03
^{106}Ru	(Bq/g)	<4.4e+04	<6.2e+04	<5.7e+03	<5.9e+03	<2.5e+04
^{90}Sr	(Bq/g)	7.52e+05	2.28e+06	1.05e+06	1.65e+06	2.03e+06
^{95}Zr	(Bq/g)	<3.9e+04	<4.5e+04	<2.8e+03	<4.6e+03	<1.3e+05
Alpha emitters						
^{232}U	(Bq/g)	-	-	-	-	-
^{233}U	(Bq/g)	8.13e+03	1.18e+04	5.15e+02	8.37e+02	6.66e+03
^{235}U	(Bq/g)	<2.8e+04	<2.8e+04	<3.7e+03	<4.2e+03	<1.2e+04
$^{239}Pu/^{240}Pu$	(Bq/g)	2.49e+04	1.18e+04	1.54e+03	2.93e+03	5.11e+03
$^{238}Pu/^{241}Am$	(Bq/g)	5.13e+04	3.21e+04	3.74e+03	7.35e+03	1.48e+04
^{243}Cm	(Bq/g)	<2.5e+04	<2.6e+04	<3.6e+03	<3.9e+03	<1.3e+04
^{244}Cm	(Bq/g)	4.46e+04	1.67e+05	1.63e+04	3.32e+04	6.14e+04

Table D-3. Oak Ridge National Laboratory Active Tanks Chemical and Radiological Sludge Sample Results (Tanks W-21, -23, -25, -26, -27, -28, and -31). (sheet 2 of 2)

Characteristic		W27-H1-S	W27-H1-H	W28-S	W31-S	W31-H
Physical properties and miscellaneous data						
TS	(mg/g)	386	471	533	369	964
Density	(g/mL)	1.26	1.33	1.49	1.26	-
IC	(mg/kg)	5250	12700	3620	1410	21900
TC	(mg/kg)	7690	16500	6120	1820	30400
TOC	(mg/kg)	2440	3830	2500	410	8530
RCRA metals						
Ag	(mg/kg)	(<7.2)	(<13.)	(17.)	(<6.1)	(<5.4)
As	(mg/kg)	<39	<69	27	<33	<29
Ba	(mg/kg)	49	72	39	17	180
Cd	(mg/kg)	13	17	26	1.7	1.5
Cr	(mg/kg)	65	90	55	27	75
Hg	(mg/kg)	11	18	12	14	39
Ni	(mg/kg)	27	40	62	17	52
Pb	(mg/kg)	120	200	190	170	360
Se	(mg/kg)	<49	<86	<29	<41	<37
Tl	(mg/kg)	20	<27	<9	<13	<11
Process metals						
Al	(mg/kg)	4300	6800	830	1400	16000
B	(mg/kg)	<6.4	<11	4.9	<1.2	22
Ca	(mg/kg)	38000	54000	57000	5600	62000
Cs	(mg/kg)	-	-	<0.8	<1.1	2.4
Fe	(mg/kg)	1400	2500	630	420	7700
K	(mg/kg)	6100	6700	11000	7900	6700
Mg	(mg/kg)	4800	5900	15000	870	3100
Na	(mg/kg)	71000	66000	66000	69000	48000
Sr	(mg/kg)	120	150	130	30	170
Th	(mg/kg)	1890	3040	1370	2790	11800
U	(mg/kg)	2710	1960	17000	3000	9200
Beta/gamma emitters						
Gross alpha	(Bq/g)	2.25e+04	3.10e+04	5.39e+04	2.31e+04	8.95e+04
Gross beta	(Bq/g)	1.44e+06	2.02e+06	2.40e+06	3.18e+06	1.10e+07
^{14}C	(Bq/g)	1.89e+02	4.86e+02	7.60e+01	3.14e+02	1.05e+03
^{144}Ce	(Bq/g)	<5.6e+03	<7.7e+03	<1.7e+04	<9.4e+03	<1.4e+04
^{60}Co	(Bq/g)	1.61e+04	2.50e+04	7.91e+04	8.10e+03	3.01e+04
^{134}Cs	(Bq/g)	<1.2e+03	<1.8e+03	<4.6e+03	3.64e+03	2.07e+03
^{137}Cs	(Bq/g)	3.75e+05	5.71e+05	1.94e+05	2.35e+05	5.52e+05
^{152}Eu	(Bq/g)	1.99e+04	2.42e+04	7.18e+05	<1.7e+04	2.72e+04
^{154}Eu	(Bq/g)	1.26e+04	1.51e+04	3.20e+05	5.86e+03	2.07e+04
^{155}Eu	(Bq/g)	<3.4e+03	3.26e+03	9.70e+04	<5.9e+03	<8.7e+03
^{95}Nb	(Bq/g)	<7.3e+02	<1.4e+03	<2.9e+03	<9.2e+02	<1.2e+03
^{106}Ru	(Bq/g)	<1.1e+04	<1.6e+04	<2.8e+04	<1.4e+04	<1.7e+04
^{90}Sr	(Bq/g)	4.55e+05	5.51e+05	5.57e+05	1.42e+06	5.17e+06
^{95}Zr	(Bq/g)	<1.7e+03	<2.6e+03	<2.4e+04	<4.7e+03	<6.6e+03
Alpha emitters						
^{234}U	(Bq/g)	-	-	1.46e+03	-	-
^{233}U	(Bq/g)	5.18e+02	6.20e+02	3.56e+03	5.08e+02	2.05e+03
^{235}U	(Bq/g)	<5.8e+03	<8.3e+03	<1.7e+04	<9.7e+03	<1.4e+04
$^{239}Pu/^{240}Pu$	(Bq/g)	1.04e+03	1.86e+03	1.51e+03	8.78e+02	3.22e+03
$^{238}Pu/^{241}Am$	(Bq/g)	4.41e+03	6.73e+03	5.28e+03	2.43e+03	1.12e+04
^{243}Cm	(Bq/g)	<6.5e+03	<1.0e+04	<1.4e+04	<8.4e+03	<1.3e+04
^{244}Cm	(Bq/g)	1.60e+04	2.15e+04	3.83e+04	1.71e+04	6.89e+04

Table D-4. Oak Ridge National Laboratory Inactive Tank TH-2 Chemical and Radiological Sample Results.

Sample[a]	TH2-L131	TH2-L132
	Physical properties and miscellaneous data	
TDS, mg/mL	4.9	5.0
TS, mg/mL	5.1	5.3
Density, g/mL	0.9989	1.0002
IC, mg/L	<0.1	0.2
TC, mg/L	13.6	8.0
TOC, mg/L	13.6	7.8
	RCRA metals (mg/L)	
Ag	<0.2	<0.2
As	<2	<2
Ba	<0.1	<0.1
Cd	0.083	<0.08
Cr	0.80	0.68
Hg	2.8	2.7
Ni	0.58	0.43
Pb	1.9	2.1
Se	<1	<1
Tl	<0.5	<0.5
	Process metals (mg/L)	
B	<0.7	<0.7
Si	<1	<1
Th	1.68	1.71
U	<8	<8
	Anions (mg/L)	
Bromide	1510	1510
Chloride	18	18
Cyanide	0.28	0.22
Fluoride	17	17
Nitrate	<10	<10
Phosphate	<10	<10
Sulfate	26	26
Sulfide	<0.1	<0.1
	Alkalinity	
pH	2.44 (2.12)[b]	2.46 (2.14)
H^+, *M*	0.056	0.056
OH^-, *M*	NA[c]	NA
CO_3^{2-}, *M*	NA	NA
HCO_3^-, *M*	NA	NA
	Beta/gamma emitters (Bq/mL)	
Gross alpha	87.6 (58)	84.5 (52)
Gross beta	9280 (8690)	9450 (8730)
^{14}C	2350	<1
^{60}Co	4 (3.6)	<3 (2.2)
^{137}Cs	2710 (2730)	2740 (2640)
^{3}H	2.34	2.39
^{90}Sr	2820 (2780)	2920 (2720)
	Alpha emitters (Bq/mL)	
^{232}U	ND[d]	5
^{233}U	15	17
$^{239}Pu/^{240}Pu$	ND	ND
^{238}Pu	ND	ND
^{241}Am	ND	ND
^{244}Cm	ND	ND

[a]ACD sample request numbers IPA6285, TRU9069, CPA10586.
[b]Data enclosed in parentheses were duplicate measurements by TAL group.
[c]NA = analysis not applicable for sample.
[d]ND = analyte not detected for sample.

Table D-5. Oak Ridge National Laboratory Inactive Tank WC-1 Chemical and Radiological Sample Results.

Sample[a]	WC1-L123 (liquid)	WC1-L134[e] (liquid)	WC1-L134S (sludge)
	Physical properties and miscellaneous data		
TDS, mg/mL or mg/g[c]	<1	<1[d]	NA[e]
TS, mg/mL or mg/g	<1	<1	NA
Density, g/mL or g/g	0.9750	0.9760	NA
IC, mg/L or mg/kg	32	23	560
TC, mg/L or mg/kg	67	61	9930
TOC, mg/L or mg/kg	35	38	9370
	RCRA metals (mg/L or mg/kg)		
Ag	<0.04	0.33	<40
As	1.3	2.0	<300
Ba	<0.02	93	927
Cd	<0.02	0.10	4.0
Cr	<0.02	2.9	112
Hg	<2	<2	193
Ni	<0.1	<0.1	10
Pb	<0.2	61	771
Se	2.4	<0.02	<20
Tl	<0.1	<0.1	<90
	Process metals (mg/L or mg/kg)		
B	<0.04	<0.04	<40
Si	10	90	NA
Th	<0.3	<0.3	<200
U	<2	<2	<100
	Anions (mg/L or mg/k)		
Bromide	<10	<10	<495[f]
Chloride	113	114	220
Cyanide	<0.05	<0.05	0.33
Fluoride	0.60	0.70	75
Nitrate	<10	<10	3680
Phosphate	<10	<10	<99
Sulfate	196	204	449
Sulfide	<0.1	1.4	0.99
	Alkalinity		
pH	8.25 (6.50)[g]	7.46 (6.39)	NA
	Beta/gamma emitters (Bq/mL or Bq/g)		
Gross alpha	5 (<50)	286 (1560)	8.07e+04 (8.62e+04)
Gross beta	64,200 (68,600)	73,000 (110,000)	1.09e+06 (1.36e+05)
^{241}Am	<300	131 (<300)	1.57e+04 (1.73e+04)
^{14}C	276	375	1.88e+04
^{60}Co	767 (852)	432 (594)	1.30e+05 (1.29e+05)
^{137}Cs	59,200 (58,000)	61,700 (56,500)	2.69e+05 (2.73e+05)
^{152}Eu	<30	<30	<2.68e+02 (<1.86e+03)
^{154}Eu	<30	<30	4.12e+03 (4.66e+03)
^{155}Eu	<150	<150	3.16e+03 (4.12e+03)
^{3}H	1,600	1,590	4.30e+02
^{90}Sr	1,290 (1,270)	1,420 (3,310)	3.03e+05 (4.03e+05)
	Alpha emitters (Bq/mL or Bq/g)		
^{232}U	ND[h]	ND	ND
^{233}U	ND	ND	ND
$^{239}Pu/^{240}Pu$	ND	ND	ND
^{238}Pu	ND	1,110	4.06e+04
^{241}Am	ND	200	3.48e+04
^{244}Cm	ND	251	1.08e+04

[a]ACD sample request numbers IPA6324, TRU9239.

[b]Large amount of suspended particles present; difficult to obtain representative sample. For the physical and inorganic data, the particiulates were allowed to settle prior to sampling for analysis; the duplicate radiochemical data and the alpha emitter data were obtained from a well-mixed sample.

[c]The sludge sample data are reported on a weight basis.

[d]TS/TDS data obtained after suspended solids had settled out.

[e]NA = analysis not applicable for sample.

[f]Sludge anions obtained from microwave-heated water-leach of sample.

[g]Data enclosed in parentheses were duplicate measurements by TAL group.

[h]ND = analyte not detected for sample.

Table D-6. Oak Ridge National Laboratory Inactive Tank WC-15 Chemical and Radiological Sample Results.

Sample[a]	WC15-L126	WC15-L127	WC15-L128	WC15-O130
		Physical properties and miscellaneous data		
TDS, mg/mL	<1	<1	<1	<1
TS, mg/mL	<1	<1	<1	<1
Density, g/mL	0.9560	0.9610	0.9620	0.9570
IC, mg/L	98	99	102	100
TC, mg/L	119	118	126	435
TOC, mg/L	21	19	24	335
		RCRA metals (mg/L)		
Ag	<1	0.22	0.16	<1.0
As	<8	<8	<8	<8
Ba	0.10	0.03	0.08	0.05
Cd	<0.5	<0.5	<0.5	<0.5
Cr	<0.5	<0.5	0.3	<0.5
Hg	<2	<2	<2	<2
Ni	0.11	<2	0.11	0.16
Pb	<5	<5	<5	<5
Se	0.58	0.05	0.3	<0.5
Tl	<2	<2	<2	<2
		Process metals (mg/L)		
B	<1	<1	<1	<1
Si	5.2	<2	<2	<2
Th	<7	<7	<7	<7
U	1.4	3.7	<50	2.4
		Anions (mg/L)		
Bromide	<10	<10	<10	<10
Chloride	89	87	89	85
Cyanide	<0.05	<0.05	<0.05	<0.05
Fluoride	1.2	1.2	1.2	1.2
Nitrate	<10	<10	<10	<10
Phosphate	<10	<10	<10	<10
Sulfate	50	50	38	41
Sulfide	<0.01	<0.01	0.2	1.3
		Alkalinity		
pH	8.8 (8.52)[b]	8.7 (8.50)	7.7 (8.53)	6.5 (8.39)
H^+, *M*	NA[c]	NA	NA	NA
OH^-, *M*	NA	NA	NA	NA
CO_3^{2-}, *M*	NA	NA	NA	NA
HCO_3^-, *M*	NA	NA	NA	NA
		Beta/gamma emitters (Bq/mL)		
Gross alpha	0.89 (<1)	0.13 (<1)	0.43 (<1)	0.56 (<1)
Gross beta	11.7 (<10)	10.3 (<10)	14.6 (<10)	15.4 (<10)
^{14}C	<1	<1	33	95
^{60}Co	<0.2	<0.2	<0.2	<0.3
^{137}Cs	3.0 (<5)	3.1 (<5)	4.0 (<5)	3.5 (<5)
^{3}H	18.4	18.6	18.9	18.5
^{90}Sr	1.40 (<10)	1.71 (<10)	1.93 (<10)	3.36 (<10)
		Alpha emitters (Bq/mL)		
^{232}U	[d]			
^{233}U				
$^{239}Pu/^{240}Pu$				
^{238}Pu				
^{241}Am				
^{244}Cm				

[a]ACD sample request numbers IPA6332, TRU9238.
[b]Data enclosed in parentheses were duplicate measurements by TAL group.
[c]NA = analysis not applicable for sample.
[d]Gross alpha too low for alpha spectroscopy measurements.

Table D-7. Oak Ridge National Laboratory Inactive Tanks Chemical (Physical and Metals) Liquid and Sludge Sample Results (Tanks 7562 and 7860-A; T-1, -2, -3, -4, -9, -30; TH-1, -3, -4; W-1 through W-11 and W-13 through W-15; WC-17; and W-1-A).
(sheet 1 of 2)

Sample ID	Depth (in.)	Density (g/mL)	Suspended solids (mg/mL)	Dissolved solids (mg/mL)	Tot. Sol. L:(mg/mL) S:(mg/g)	TOC L:(mg/L) S:(mg/kg)	Soluble Si (mg/L)	Metals (Liquid: mg/L; sludge: mg/kg) U	Ag	As	Ba	Cd	Cr	Hg	Ni	Pb	Se	Tl	pH
T4/L.111	0	1.016	0.3	23.6	23.9	460	1.96	23.3	0.018	<0.4	<0.02	<0.01	13*	7.9	<0.1	<0.5	<0.23	<0.23	11.7
T4/L.44	4	1.020	2.7	23.6	26.3	460	1.96	25.7	0.017	<0.8	<0.04	<0.02	9.4	1.1	<0.2	<1	<0.09	<0.09	11.7
T4/L.45	34	1.016	<0.1	23.7	23.4	473	1.45	27.8	0.02	<0.8	<0.04	<0.02	14	2.7	<0.2	<1	<0.09	<0.09	11.7
T4/S46	NA	1.235	NA	NA	253	4620	NA	1850	(1.7)	<4	<50	10	(102)	585	160	(510)	(1.5)	0.73	NA
T3/L.42	5	1.035	1.5	51.9	53.4	12600	77.1	0.2	<0.01	0.4	<0.02	<0.01	14	5.7	<0.1	<0.5	<0.5	<0.5	12.7
T3/S43	NA	1.930	NA	NA	364	9140	NA	3060	0.15	<3	76	0.5	(69)	40	57	(300)	(0.74)	<0.6	NA
T9/L.47	6.5	1.034	0.7	41.5	42.2	850	9.76	852	0.01	<0.8	0.12	<0.02	0.4	3.4	<0.2	<1	<0.09	<0.09	9.1
T9/S48	NA	NA	NA	NA	343	7620	NA	2930	0.21	<2	115	7.8	(<10)	39	380	(540)	(<2)	<2	NA
T2/L.38	4	1.013	1.1	11.4	12.5	1120	5.07	166	<0.002	<0.8	<0.04	<0.02	0.44	0.1	<0.2	<1	<0.09	<0.09	9.9
T2/L.112	4	1.008	0.6	11.5	12.1	1100	6.01	161	<0.002	<0.8	0.06	<0.02	<0.1	0.1	<0.2	<1	<0.09	<0.09	9.9
T2/L.39	48	1.013	0.9	10.7	11.6	1310	6.97	158	0.002	<0.8	<0.04	<0.02	<0.1	0.15	<0.2	<1	<0.09	<0.09	9.9
T2/S40	NA	NA	NA	NA	324	28000	NA	1000	2.9	<1	33	6.6	(180)	70	72	(350)	(<1)	<1	NA
T1/L.35	4	1.005	0.8	6.4	7.2	836.0	9.34	172	0.005	<0.8	<0.04	<0.02	0.29	0.06	<0.2	<1	<0.2	<0.2	9.7
T1/L.36	48	1.007	<0.1	6.9	6.9	790.0	6.81	175	0.005	<0.8	0.05	<0.02	0.18	0.07	<0.2	<1	<0.2	<0.2	9.7
T1/S37	NA	NA	NA	NA	921	18600	NA	2800	2.1	<2	86	12.9	(130)	74	190	(860)	(<2)	1.7	NA
TH1/L.49	4	1.034	<0.1	44.4	41.3	26.0	35.3	0.5	0.003	<4	<0.2	<0.2	1.2	16	1.5	<2	<0.09	<0.09	1.8
TH1/L.50	10	1.034	<0.1	43.6	35.5	22.0	38.3	0.4	0.005	<4	0.23	<0.2	1.4	16	1.7	2.2	<0.09	<0.09	1.8
TH3/L.52	2.5	1.015	<0.1	10.0	15.1	6.1	15.7	<0.1	<0.002	<2.1	0.09	<0.08	2.2	11	2.6	1.9	<0.09	<0.09	1.8
TH3/L.53	5	1.015	<0.1	18.6	15.6	5.1	10.2	<0.1	<0.01	<2.1	0.86	<0.08	2.2	9	2.5	2.2	<0.5	<0.5	1.8
TH3/L.113	NA	1.000	0.1	<0.1	0.1	0.8	3.23	<0.1	<0.002	<2	<0.1	<0.09	<0.1	<0.01	<0.2	<1.4	<0.09	<0.09	6.6
W1/L.3	4	0.999	0.2	0.1	0.3	2.0	6.91	12.1	<0.002	<0.8	<0.04	<0.02	<0.1	<0.04	<0.2	<1	<0.09	(<0.09)	8.0
W1/L.115	4	0.998	0.2	0.1	0.3	<0.1	7.03	0.08	(<0.002)	<0.8	<0.04	<0.02	<0.1	<0.01	<0.2	<1	<0.09	(<0.09)	7.8
W1/L.114	24	1.000	0.2	0.1	0.3	<0.1	7.29	0.82	<0.002	<0.8	0.05	<0.02	<0.1	<0.01	<0.2	<1	<0.09	(<0.09)	7.7
W1/S15	NA	2.080	NA	NA	1200		NA		2.4	(1.8)	64	(1.2)	670	17	10	(14000)	<0.3	<0.3	NA
TH4/L.116	0	1.000	<0.1	<0.1	<0.1	14.6	0.57	0.84	<0.002	<2	<0.02	<0.06	<0.1	<0.01	<0.1	<2	<0.1	<0.09	7.1
TH4/L.55	4	1.003	0.1	1.4	1.5	19.4	0.95	15.3	<0.002	<2	<0.02	<0.06	<0.1	<0.01	<0.1	<2	<0.1	<0.09	6.9
TH4/L.117	6*	1.007	0.1	0.5	0.6	31.6	1.52	24		<5	<0.3	<0.2	<0.4	<0.05	<0.5	<4	<3	<4	6.9
TH4/L.56	30	1.056	<0.1	70.6	70.6	352	3.3	7230	<0.002	<4	<0.2	<0.2	1.6	0.25	<1	<2	<0.1	<0.09	7.1
TH4/L.57	72	1.083	0.3	103.8	104.1	2170	2.66	16700	<0.005	<10	<0.6	<0.5	5.6	0.04	<3	<5	<0.2	<0.2	7.8
TH4/S58	NA	NA	NA	NA	256	6940	NA	4530	0.068	(46)	5.6	<0.3	(72)	3.6	16	38	(<0.4)	<0.4	NA
TH4/S59	NA	NA	NA	NA	405	7530	NA	2590	0.15	(2.1)	(12)	0.37	(250)	4.9	20	99	(<0.2)	<0.2	NA
W5/L.73	4	1.044	0.7	47.5	48.2	700	12.9	296	<0.002	<4	<0.2	<0.08	2.7	0.41	<1	<2	<0.09	<0.09	10.6
W5/S75	NA	NA	NA	NA	348	4020	NA	1420	0.26	<1	140	10	(500)	18	52	300	(0.81)	(<0.5)	NA
W4/L.77	4	0.999	<0.1	2.5	2.5	2.0	3.99	16.2	<0.002	<4	<0.2	<0.08	<0.3	<0.01	<1	<2	<0.09	<0.09	0.7
W4/L.78	30	1.009	<0.1	14.8	14.7	2.0	2.98	52.3	<0.002	<4	<0.2	<0.08	2.6	<0.01	<1	<2	<0.09	<0.09	10.4
W4/L.79	54	1.059	0.1	74.0	74.1	109	1.65	69.8	<0.002	<4	<0.2	<0.08	32	0.07	1.5	<2	<0.09	<0.09	11.8
W4/S80	NA	NA	NA	NA	406	9110	NA	6340	0.006	(<2)	(350)	<1	(2400)	36	85	1100	(<2)	<2	NA
W7/L.82	3	1.130	10.3	158.7	170	50.0	7.35	8530	.	<4	<0.2	<0.08	145	(11)	<1	<2	<2	<2	10.7
W7/S84	NA	NA	NA	NA	367	9030	NA	45000	0.36	<6	(1300)	2.0	(660)	141	84	(300)	(<1)	<1	NA
W7/S85	NA	NA	NA	NA	360	4010	NA	86000	0.12	<6	(16)	2.2	(130)	52	22	(77)	(<1)	<1	NA
W8/L.86	4	1.020	<0.1	29.4	29.4	720	1.39	817	0.007	<4	<0.2	<0.2	12	0.09	<1	<2	<0.09	<0.09	9.6
W8/L.87	16	1.027	<0.1	37.8	37.6	1460	1.14	1760	<0.002	<4	<0.2	<0.2	18	0.17	<1	<2	<0.09	<0.09	9.7
W8/S88	NA	NA	NA	NA	558	11300	NA	8560	1.3	<4	(38)	4.1	(410)	50	160	(1800)	(<0.7)	<0.7	NA

Table D-7. Oak Ridge National Laboratory Inactive Tanks Chemical (Physical and Metals) Liquid and Sludge Sample Results (Tanks 7562 and 7860-A; T-1, -2, -3, -4, -9, -30; TH-1, -3, -4; W-1 through W-11 and W-13 through W-15; WC-17; and W-1-A).
(sheet 2 of 2)

Sample ID	Depth (in.)	Density (g/ml.)	Suspended solids (mg/ml.)	Dissolved solids (mg/ml.)	Tot. Sol. L:(mg/ml.) S:(mg/g)	TOC L:(mg/L) S:(mg/kg)	Soluble Si (mg/L.)	Metals (Liquid: mg/L; sludge: mg/kg) U	Ag	As	Ba	Cd	Cr	Hg	Ni	Pb	Se	Tl	pH
W9/L.90	5	1.017	<0.1	21.2	21.2	290	2.53	2390	<0.002	<4	<0.2	<0.2	7.3	0.06	<1	<2	<0.09	<0.09	10.2
W9/S92	NA	NA	NA	NA	944	13900	NA	25800	0.77	<5	(200)	4.9	160	40	110	620	<0.7	<0.7	NA
W1/L.7	4	1.002	<0.1	0.2	0.2	6.4	0.38	<0.1	<0.002	<2	0.13	<0.04	<0.1	<0.01	<0.6	<1	<0.09	(<0.09)	7.9
W1/L.8	9	1.002	<0.1	0.2	0.2	10.1	0.69	<0.1	<0.002	<2	0.11	<0.04	<0.1	<0.01	<0.6	<1	<0.09	(<0.09)	8.0
W2/L.11	4	1.002	<0.1	0.4	0.3	18.9	4.94	0.18	<0.002	<2	0.19	<0.04	<0.1	<0.01	<0.5	1.1	<0.09	(<0.09)	8.5
W2/L.118	4	1.003	0.2	0.3	0.5	22.6	4.5	0.17	<0.002	<2	0.14	<0.04	<0.1	<0.01	<0.6	<1	<0.09	(<0.09)	8.5
W4/L.22	4	1.013	0.2	6.1	6.3	49.5	2.55	910	0.003	<4	<0.2	<0.08	2.8	<0.01	<1	<2	<0.09	<0.09	9.1
W4/L.119	30	1.014	0.2	10.1	10.3	59.9	2.07	1780	<0.002	<4	<0.2	0.09	5	<0.01	<1	<2	<0.09	<0.09	10.0
W4/L.23	54	1.027	0.5	27.4	27.9	558.5	1.75	3600	<0.002	<4	<0.2	0.09	13.5	<0.01	<1	<2	<0.09	<0.09	10.9
W4/S24	NA	NA	NA	NA	307	9190	NA	33.0%	0.08	<4	(11)	22	(720)	2.4	15	(150)	(<0.7)	<0.7	NA
W4/I126	NA	NA	NA	NA	349	9020	NA	29.6%	0.06	<2	(5.8)	2.1	(200)	0.82	14	62	(0.49)	<0.4	NA
W10/L.93	4	1.004	<0.1	5.7	5.5	8.7	1.71	34.7	<0.002	<4	<0.2	<0.2	0.55	<0.01	<1	2.2	<0.09	<0.09	9.2
W10/L.94	28	1.009	<0.1	13.7	13.6	86.4	1.9	645	<0.002	<4	<0.2	<0.2	4.4	0.05	<1	<2	<0.09	<0.09	10.5
W10/L.95	49	1.027	<0.1	37.1	36.7	546	2.31	460	<0.002	<4	<0.2	<0.2	19	0.37	<1	<2	<0.09	<0.09	10.9
W10/I120	NA	NA	NA	NA	845	14600	NA	82300	0.09	<7	(24)	6.1	(97)	11	31	190	(<1)	<1	NA
W10/S96	NA	NA	NA	NA	449	8180	NA	10800	0.79	5.7	(94)	4.7	(140)	48	83	400	(<0.9)	(<0.9)	NA
7860A/L.63	8	0.909	NA	NA	NA	NA	NA	212						0.10					NA
7860A/L.64	16	0.914	NA	NA	NA	NA	NA	252						0.06					NA
7860A/L.65	24	0.910	NA	NA	NA	NA	NA	188						0.12					NA
7860A/L.66	32	0.909	NA	NA	NA	NA	NA	192						0.06					NA
7860A/L.67	40	1.004	<0.1	3.1	2.7	43.8	1.4	10	<0.002					0.01			<0.09	<0.09	4.0
7860A/L.68	48	1.002	<0.1	3.5	2.3	43.8	1.7	9.8	<0.002					0.03			<0.09	<0.09	3.8
7860A/L.69	54	1.003	<0.1	3.8	3.5	45.6	1.5	40	<0.002					0.05			<0.09	<0.09	4.0
W3/L.16	4	1.004	<0.1	2.9	2.7	772	6.5	88	0.002	<4	<0.2	<0.2	3.3	<0.01	<1	<2	<0.09	<0.09	9.0
W3/L.17	68	1.006	<0.1	4.6	4.4	1130	5.3	163	0.002	<4	<0.2	<0.2	6.8	0.01	<1	<2	<0.09	<0.09	10.1
W3/L.18	106	1.009	<0.1	8.6	8.4	1500	7.2	285	0.002	<4	<0.2	<0.2	20	0.02	<1	<2	<0.09	<0.09	11.1
W3/S19	NA	NA	NA	NA	300	3410	NA	61300	0.05	(<2)	(6.4)	0.52	1300	0.83	<7	52	(<0.3)	<0.3	NA
WC17/O101	0	0.996	0.3	0.3	0.6	191	4.7	0.02	<0.001	<2	0.19	<0.09	<0.1	0.78	<0.6	<1	<0.05	<0.05	7.6
WC17/O102	1	0.999	0.3	0.4	0.7	143	4.67	0.01	<0.001	<2	0.15	<0.09	<0.1	0.08	<0.6	<1	<0.05	<0.05	7.6
WC17/L.103	6	0.989	0.3	0.4	0.7	309	4.51	0.03	(<0.001)	<2	0.17	<0.09	<0.1	49	<0.6	<1	<0.05	<0.05	7.6
WC17/L.104	14	1.005	0.1	0.4	0.5	153	4.66	0.01	<0.001	<2	0.18	<0.09	<0.1	0.04	<0.6	<1	<0.05	<0.05	7.6
WC17/L.105	26	1.004	<0.1	0.4	0.3	127	7.64	0.01	<0.001	<2	0.14	<0.09	<0.1	<0.005	<0.6	<1	<0.05	<0.05	7.9
WC17/S106	NA	NA	NA	NA	122		NA	60.4	4.5	(0.76)	1400	79	(2000)	300	270	390	<0.5	(<0.5)	NA
W13/L.27	4	1.033	0.6	34.2	34.8	41.4	14.9	18.8	0.003	<4	0.69	0.22	2.5	31	0.4	0.8	<0.09	<0.09	3.0
W13/L.28	18	1.033	<0.1	33.9	33.6	39.0	14.5	17.4	0.004	<4	0.7	0.3	2.7	35	0.7	0.9	<0.09	<0.09	3.0
W14/L.30	4	1.049	<0.1	29.8	27.5	121	16.5	0.56	<0.002	<4	0.45	<0.2	60	0.08	50	7.5	<0.09	<0.09	0.6
W14/L.31	14	1.052	1.4	27.7	29.1	132	16.2	0.56	0.008	<4	0.63	<0.2	64	0.18	52	7.5	<0.09	<0.09	0.5
W15/L.32	4	1.080	2.0	38.1	40.1	53.7	22.3	387	<0.002	<4	3.2	<0.2	53	0.40	48	7.5	<0.09	<0.09	0.2
W15/L.33	21	1.081	<0.1	41.1	38.4	42.7	21.9	383	0.002	<4	3.4	<0.2	55	0.39	48	7.5	<0.09	<0.09	0.2
W1A/L.1	2	1.002	0.3	0.4	0.7		4.47	477	0.008	<4	<0.2	7.3	0.33	0.96	<1	<2	<0.09	<0.09	8.8
T30/L.121	2	1.001	<0.1	<0.1	<0.1	13.7	0.62	<1.0	0.002	<2	<0.1	<0.09	<0.1	0.01	<0.6	<1	<0.05	<0.05	8.7
7562/L.97	4	1.001	0.1	0.2	0.3	29.6	2.36	6.77	<0.001	<2	<0.1	<0.09	<0.1	<0.01	<0.6	<1	<0.05	<0.05	7.4
7562/S98	NA	NA	NA	NA	75.9		NA	1940	0.0020	(<2)	140	18	(2300)	18	320	900	<0.006	(<0.006)	NA

* Values in bold exceed regulatory limits, () represents suspect data.
* Top 6 in. were sampled.

Table D-8. Oak Ridge National Laboratory Inactive Tanks Chemical (Anion) Liquid and Sludge Sample Results (Tanks 7562 and 7860-A; T-1, -2, -3, -4, -9, -30; TH-1, -3, -4; W-1 through W-11 and W-13 through W-15; WC-17; and W-1-A). (sheet 1 of 2)

Sample ID	Depth (in.)	pH	Cl^- (U*)	F^- (U)	NO_3^- (U)	PO_4^{-2} (U)	SO_4^{-2} (U)	CN^- (U)	OH^- (N)	H^+ (N)	CO_3^{-2} (M)	HCO_3^- (M)
4/L111	0	11.7	3.4	1.1	26	50	6.3	•	0.01	•	0.05	•
T4/L44	4	11.7	3.1	1.1	26	51	6.3	0.54	0.01	•	0.05	•
T4/L45	34	11.7	3.4	1.3	25	50	5.9	0.59	0.01	•	0.05	•
T4/S46	NA	NA	<0.83%	<0.83%	•	<42%	<42%	•	•	•	•	•
T3/L42	5	12.7	7.0	1.8	53	160	15	1.10	0.03	•	0.08	•
T3/S43	NA	NA	29%	<12.7%	•	<62.5%	<62.5%	0.20	•	•	•	•
T9/L47	6.5	8.8	290	1.0	110	<5	37	•	•	•	<0.01	0.03
T9/S48	NA	NA	3%	<0.7%	•	•	6.8%	•	•	•	•	•
T2/L38	4	9.4	12	1.0	8.4	<5	22	0.14	•	•	0.04	0.08
T2/L112	4	9.4	12	1.0	8.0	<5	21	0.12	•	•	0.04	0.09
T2/L39	48	9.4	12	1.0	8.2	<5	22	0.10	•	•	0.04	0.09
T2/S40	NA	NA	4.9%	<0.8%	•	•	14%	•	•	•	•	•
T1/L35	4	9.3	7.8	1.0	16	<5	7.5	•	•	•	0.01	0.04
T1/L36	48	9.3	8.0	1.0	17	<5	8.1	0.22	•	•	0.01	0.04
T1/S37	NA	NA	•	•	•	•	•	•	•	•	•	•
TH1/L49	4	1.8	<1	<1	1400	<250	<250	<0.04	•	0.41	•	•
TH1/L50	10	1.8	<1	<1	1300	<250	<250	<0.10	•	0.40	•	•
TH3/L52	2.5	1.8	<1	<1	510	<50	<50	<0.04	•	0.17	•	•
TH3/L53	5	1.8	<1	<1	500	<50	<50	<0.04	•	0.18	•	•
TH3/L113	NA	6.6	<1	<1	<5	<5	<5	<0.05	•	•	•	•
W11/L3	4	8.0	<1	<1	<5	<5	<5	<0.04	•	•	•	•
W11/L115	4	7.8	<1	<1	<5	<5	<5	<0.04	•	•	•	•
W11/L114	24	7.7	<1	<1	<5	<5	<5	<0.04	•	•	•	•
W11/H5	NA	NA	•	•	•	•	•	•	•	•	•	•
TH4/L116	0	7.1	1.7	1.3	49	6.6	17	<0.05	<0.02	•	<0.01	•
TH4/L55	4	6.9	8.2	2.0	1,300	<50	140	<0.07	<0.01	•	<0.01	•
TH4/L117		6	6.9	5.7	1.0	550	<50	91	•	<0.02	•	<0.01 •
TH4/L56	39	7.1	140	86	25,000	<2500	83,000	•	<0.02	•	<0.01	•
TH4/L57	72	7.6	160	80	31,000	<2500	14,000	•	0.02	•	0.02	•
TH4/S58	NA	NA	<0.4%	<0.4%	•	•	4.8%	•	•	•	•	•
TH4/S59	NA	NA	370	960	•	•	0.47%	0.16	•	•	•	•
W5/L73	4	10.1	8.6	56	21	420	26	0.24	•	•	0.16	0.26
W5/S75	NA	NA	<84	1,300	•	<840	<840	•	•	•	•	•
W6/L77	4	8.7	1.3	5.1	73	<5	4.8	<0.07	•	•	<0.01	0.02
W6/L78	30	10.4	4.5	27	250	31	34	0.05	•	•	0.02	0.11
W6/L79	54	11.4	12.0	49	710	210	330	0.41	•	•	0.18	0.10
W6/S80	NA	NA	<800	4,000	•	<2,500	<2,500	•	•	•	•	•
W7/L82	3	10.3	29	11	440	29	55	<0.06	•	•	0.21	0.33
W7/S84	NA	NA	<1.2%	1,000	•	•	6.7%	•	•	•	•	•
W7/H85	NA	NA	•	•	•	•	•	•	•	•	•	•
W8/L86	4	9.2	290	<50	2,700	<250	1,400	0.33	•	•	0.01	0.04
W8/L87	16	9.3	840	<125	7,300	<625	4,900	0.58	•	•	0.02	0.07
W8/S88	NA	NA	<100	<100	•	<500	<500	•	•	•	•	•

Table D-8. Oak Ridge National Laboratory Inactive Tanks Chemical (Anion) Liquid and Sludge Sample Results (Tanks 7562 and 7860-A; T-1, -2, -3, -4, -9, -30; TH-1, -3, -4; W-1 through W-11 and W-13 through W-15; WC-17; and W-1-A). (sheet 2 of 2)

Sample ID	Depth (in.)	pH	Cl^- (U[a])	F^- (U)	NO_3^- (U)	PO_4^{-2} (U)	SO_4^{-2} (U)	CN^- (U)	OH^- (N)	H^+ (N)	CO_3^{-2} (M)	HCO_3^- (M)
W9/L90	5	9.8	340	<50	1,650	2,600	900	0.14	*	*	0.03	0.09
W9/S92	NA[c]	NA	<100	<100	*	<500	<500	*	*	*	*	*
W1/L7	4	7.9	13	6.1	32	<5	47	<0.06	*	*	<0.01	<0.01
W1/L8	9	8.0	13	6.2	32	<5	47	<0.05	*	*	<0.01	<0.01
W2/L11	4	8.5	7.2	9.2	<5	<5	15	<0.05	*	*	<0.01	<0.01
W2/L118	4	8.5	7.6	9.9	<5	<5	15	<0.05	*	*	<0.01	<0.01
W4/L22	4	9.1	<20	<20	1,700	<100	570	<0.04	*	*	<0.01	0.02
W4/L119	30	10.0	<20	<20	1,600	<100	930	<0.04	*	*	0.01	0.04
W4/L23	54	10.9	<20	<20	2,200	250	2600	<0.07	*	*	0.08	0.19
W4/S24	NA	NA	<10	<10	*	<50	<50	*	*	*	*	*
W4/H26	NA	NA	<10	<10	*	<50	<50	*	*	*	*	*
W10/L93	4	9.2	170	74	2,900	<200	280	<0.04	*	*	*	0.02
W10/L94	28	10.5	410	190	4,400	<200	690	<0.04	*	*	0.02	<0.01
W10/L95	49	10.9	990	430	8,500	<200	2,100	0.54	*	*	0.09	0.02
W10/H120	NA	NA	<60	<60	*	<300	<300	*	*	*	*	*
W10/S96	NA	NA	<120	<120	*	<600	<600	*	*	*	*	*
7860A/L63	8	*	*	*	*	*	*	*	*	*	*	*
7860A/L64	16	*	*	*	*	*	*	*	*	*	*	*
7860A/L65	24	*	*	*	*	*	*	*	*	*	*	*
7860A/L66	32	*	*	*	*	*	*	*	*	*	*	*
7860A/L67	40	4.0	280	<20	3,800	<100	<100	*	*	0.03	*	*
7860A/L68	48	3.8	270	<20	3,800	<100	<100	*	*	0.03	*	*
7860A/L69	54	4.0	280	<20	3,800	<100	<100	*	*	0.03	*	*
W3/L16	4	9.0	7.8	<10	<50	490	280	0.08	*	*	<0.01	0.03
W3/L17	60	10.1	7.9	<10	<50	600	430	<0.07	*	*	0.02	*
W3/L18	106	11.1	10.0	<10	<50	800	620	0.10	*	*	0.05	*
W3/S19	NA	NA	<100	<100	*	<500	<500	*	*	*	*	*
WC17/O101	0	7.6	35	<1	8.2	<5	99	<0.06	*	*	*	<0.01
WC17/O102	1	7.6	32	<1	13	<5	98	0.06	*	*	*	<0.01
WC17/L103	6	7.6	39	1.0	<5	<5	89	<0.06	*	*	*	<0.01
WC17/L104	14	7.6	30	1.0	15	<5	82	0.06	*	*	*	<0.01
WC17/L105	26	7.9	31	<1	16	<5	91	<0.06	*	*	*	<0.01
WC17/S106	NA	NA	<50	<50	*	<300	<300	*	*	*	*	*
W13/L27	4	3.0	<3	<3	43	<13	<13	<0.05	*	0.26	*	*
W13/L28	18	3.0	<3	<3	43	<13	<13	<0.05	*	0.27	*	*
W14/L30	4	0.6	<3	<3	70	<13	<13	<0.05	*	0.19	*	*
W14/L31	14	0.5	<3	<3	70	<13	<13	<0.05	*	0.21	*	*
W15/L32	4	0.2	<4	<4	120	<20	<20	<0.06	*	0.70	*	*
W15/L33	21	0.2	<4	<4	120	<20	<20	<0.07	*	0.73	*	*
W1A/L1	2	8.8	33	1.0	<5	<5	58.0	<0.06	*	*	*	<0.01
T30/L121	2	8.7	<1	<1	<5	<5	<5	<0.06	*	*	*	<0.01
7562/L97	4	7.4	13	<10	160	<50	120	<0.05	*	*	*	<0.01
7562/S98	NA	NA	<90	<90	*	<450	<450	*	*	*	*	*

[a]For liquids U = mg/L; for sludges U= mg/kg.
[b]Asterisk indicates that data are not available.
[c]NA = not available.

Table D-9. Oak Ridge National Laboratory Inactive Tanks Radiological Liquid and Sludge Sample Results (Tanks 7562 and 7860-A; T-1, -2, -3, -4, -9, -30; TH-1, -3, -4; W-1 through W-11 and W-13 through W-15; WC-17; and W-1-A). (sheet 1 of 2)

Sample ID	Depth (in.)	pH	Gross alpha	Gross beta	^{137}Cs	^{60}Co	^{90}Sr	H-3	^{233}U	^{236}U	^{252}Cf	^{238}Pu	^{239}Pu	^{244}Cm	^{241}Am	^{134}Cs	^{228}Th ^{232}Th	^{232}U	^{152}Eu	^{154}Eu	^{155}Eu	^{14}C
T4/L.111	0	11.7	3.8E+01	3.1E+05	3.0E+05	5.2E+01	1.4E+03	1.1E+02	2.3E+01	•[a]	•	•	•	•	•	•	•	•	•	•	•	•
T4/L.44	4	11.7	3.6E+01	2.0E+05	3.0E+05	6.4E+01	1.2E+03	1.1E+02	2.2E+01	•	•	•	•	•	•	•	•	•	•	•	•	•
T4/L.45	34	11.7	4.9E+01	3.1E+05	3.0E+05	5.2E+01	1.4E+03	1.1E+02	2.9E+01	•	•	•	•	•	•	•	•	•	•	•	•	•
T4/S46	NA[b]	NA	3.7E+05	3.6E+07	4.5E+05	6.0E+04	2.2E+07	2.0E+01	7.1E+03	•	•	2.2E+04	4.6E+03	2.1E+05	8.2E+03	•	5.0E+02	•	5.2E+04	4.4E+04	7.0E+03	5.1E+02
T3/L.42	5	12.7	2.0E+00	2.0E+05	2.7E+05	3.6E+02	3.0E+02	1.7E+02	2.0E+00	•	•	•	•	•	•	•	•	•	•	•	•	•
T3/S43	NA	NA	2.0E+05	2.5E+07	1.3E+06	1.6E+05	8.1E+06	7.7E+01	8.3E+03	•	<200	1.4E+04	5.3E+03	1.8E+05	•	•	•	•	5.1E+04	5.3E+04	•	7.6E+02
T9/L.47	6.5	8.8	7.0E+02	3.4E+05	2.9E+05	6.0E-03	3.6E+04	1.6E+02	6.6E+02	•	•	•	•	•	•	•	•	•	•	•	•	•
T9/S48	NA	NA	1.5E+05	1.6E+07	4.0E+05	4.3E+04	1.4E+07	3.4E+01	4.4E+03	•	<2	1.0E+04	4.3E+03	9.7E+04	•	•	•	•	3.5E+04	8.9E+03	•	2.2E+03
T2/L.38	4	9.4	2.0E+02	1.4E+05	1.4E+05	<75	2.5E+03	2.1E+02	1.9E+02	•	•	•	•	•	•	•	•	•	•	•	•	4.8E+02
T2/L.112	4	9.4	2.1E+02	1.4E+05	1.4E+05	<75	2.8E+03	2.1E+02	1.8E+02	•	•	•	•	•	•	•	•	•	•	•	•	3.6E+02
T2/L.39	48	9.4	2.0E+02	1.4E+05	1.4E+05	<75	2.7E+03	2.1E+02	1.8E+02	•	•	•	•	•	•	•	•	•	•	•	•	2.3E+02
T2/S40	NA	NA	2.5E+05	2.0E+07	2.5E+05	6.4E+04	1.2E+07	9.5E+01	8.3E+03	•	1.0E+05	3.1E+03	5.1E+03	<200	•	•	•	•	3.0E+04	2.6E+04	3.0E+03	1.7E+01
T1/L.35	4	9.3	1.9E+02	8.1E+04	7.4E+04	<50	3.3E+03	7.1E+01	1.0E+02	•	•	•	•	•	•	•	•	•	•	•	•	•
T1/L.36	48	9.3	2.1E+02	7.8E+04	7.5E+0	<50	3.4E+03	7.1E+01	2.0E+02	•	•	•	•	•	•	•	•	•	•	•	•	•
T1/S37	NA	NA	6.5E+05	5.9E+07	3.9E+05	2.6E+05	3.2E+07	2.6E+01	•	•	•	3.4E+04	6.5E+03	•	•	•	•	•	1.4E+05	1.2E+05	2.3E+04	4.8E+01
TH1/L.49	4	1.8	3.9E+02	3.2E+04	9.0E+03	<20	1.0E+04	5.0E+00	7.5E+01	•	<5	<6	<3	<2	•	•	4.0E+01	•	•	•	•	5.0E-01
TH1/L.50	10	1.8	4.2E+02	3.9E+04	9.1E+03	<20	1.0E+04	4.9E+00	8.0E+01	•	<4	<5	<3	<2	•	•	5.1E+01	•	•	•	•	5.0E-01
TH3/L.52	2.5	1.8	1.5E+02	3.2E+04	7.7E+03	<20	8.8E+03	2.6E+00	2.6E+01	•	<2	<2	<1	<1	•	•	1.7E+01	•	•	•	•	•
TH3/L.53	5	1.8	1.4E+02	3.0E+04	8.4E+03	<20	8.7E+03	9.4E+00	7.1E+01	•	<2	<1	<1	<1	•	•	1.5E+01	•	•	•	•	•
TH3/L.113	NA	6.6	<1	<20	<27	<20	7.2E-01	1.7E-01	<1	•	•	<1	<1	<1	•	•	<1	•	•	•	•	2.0E-01
W1/L.3	4	8.0	<1	<20	<20	<20	2.0E+01	6.0E-01	•	•	•	•	•	•	•	•	•	•	•	•	•	2.0E-01
W1/L.115	4	7.8	<1	<20	<20	<20	4.2E+01	5.0E-01	•	•	•	•	•	•	•	•	•	•	•	•	•	1.0E-02
W1/L.114	24	7.7	<1	<20	<20	<20	2.1E+01	5.0E-01	•	•	•	•	•	•	•	•	•	•	•	•	•	1.0E-01
W1/S15	NA	NA	•	•	•	•	•	•	•	•	•	•	•	•	•	•	•	•	•	•	•	•
TH4/L.116	0	7.1	<20	<20	5.4E-01	<20	3.0E-02	3.0E-03	<0.2	•	<0.2	<0.2	<0.2	<0.2	•	•	1.3E-01	•	•	•	•	•
TH4/L.55	4	6.9	<20	<10	7.4E+00	<20	1.4E-01	3.0E-02	<0.2	•	<0.2	<0.2	<0.2	<0.2	•	•	•	•	•	•	•	5.0E-03
TH4/L.117	[4]	6.9	<20	<20	3.6E+00	<20	4.6E-01	•	<0.2	•	<0.2	<0.2	<0.2	<0.2	•	•	1.3E-01	•	•	•	•	•
TH4/L.56	30	7.1	1.1E+02	3.7E+02	1.8E+02	2.2E-01	2.5E+01	5.0E-02	<0.3	•	<0.3	<0.3	<0.3	<0.3	•	•	•	•	•	•	•	•
TH4/L.57	72	7.6	1.6E+02	7.0E+02	2.4E+02	3.7E-01	2.0E+01	•	<0.4	•	<0.4	<0.4	<0.4	<0.4	•	•	•	•	•	•	•	•
TH4/S58	NA	NA	1.7E+03	7.0E+03	3.9E+02	3.0E+00	1.9E+03	1.3E+01	<25	•	<230	<180	4.2E+01	<55	•	•	1.9E+02	•	•	•	•	•
TH4/S59	NA	NA	2.9E+03	9.9E+03	4.2E+02	4.5E+00	2.2E+03	2.2E+01	1.2E+03	•	<310	<2	1.3E+02	<124	•	•	4.4E+02	•	•	•	•	•
W5/L.73	4	10.1	6.0E+00	4.2E+03	5.5E+03	1.6E+02	9.0E+00	1.9E+00	•	•	<0.2	<2	<4	<0.4	•	•	•	•	•	•	•	•
W5/S75	NA	NA	1.3E+03	1.0E+05	3.0E+04	2.6E+02	2.9E+04	1.1E+01	4.6E+01	•	<4	5.4E+01	6.2E+02	3.5E+02	•	•	•	•	•	•	•	•
W6/L.77	4	8.7	1.0E+00	2.8E+03	1.6E+03	1.3E+01	3.1E+02	6.3E-01	•	•	<0.2	<2	<4	<0.4	•	•	•	•	•	•	•	•
W6/L.78	30	10.4	3.0E+00	6.0E+03	5.6E+03	2.0E+01	7.0E+01	1.4E+00	•	•	<0.2	<2	<4	<0.4	•	•	•	•	•	•	•	•
W6/L.79	54	11.4	3.0E+00	1.9E+04	2.0E+04	9.0E+01	1.9E+02	3.2E+00	•	•	<0.2	<2	<4	<0.4	•	•	•	•	•	•	•	•
W6/S80	NA	NA	8.0E+03	1.0E+06	8.2E+04	9.1E+02	3.6E+05	9.2E+00	2.7E+02	•	<8	2.1E+02	1.0E+03	4.2E+03	•	•	•	•	•	•	•	•
W7/L.82	3	10.3	2.0E+02	5.6E+05	6.4E+05	2.9E+02	6.0E+02	1.9E+01	•	•	<0.2	<2	<4	<0.4	•	•	8.5E+01	•	•	•	•	•
W7/S84	NA	NA	1.4E+04	3.1E+06	1.2E+06	5.0E+03	8.1E+05	1.2E+02	5.4E+02	•	<14	1.1E+03	2.4E+03	4.2E+03	5.7E+02	1.0E+02	•	•	1.6E+03	1.3E+03	•	•
W7/1185	NA	NA	8.0E+03	1.7E+06	1.0E+06	2.0E+03	3.1E+05	8.3E+01	1.7E+03	1.6E+03	<4	6.4E+02	4.0E+02	2.5E+03	•	•	•	•	•	4.5E+02	•	•
W8/L.86	4	9.2	1.5E+02	2.4E+05	3.4E+05	3.0E+02	6.6E+02	8.0E+00	<2	•	<2	<2	<2	<2	•	•	•	•	•	•	•	•
W8/L.87	16	9.3	2.0E+02	2.8E+05	4.0E+05	5.9E+02	4.6E+02	8.8E+00	<2	•	<2	<2	<2	<2	•	•	•	•	•	•	•	•
W8/S88	NA	NA	2.9E+04	6.7E+06	4.7E+04	4.0E+02	2.8E+06	8.0E+00	1.6E+03	•	<4	2.9E+03	3.2E+03	1.5E+04	2.0E+02	•	•	•	9.0E+01	1.4E+02	•	•

Table D-9. Oak Ridge National Laboratory Inactive Tanks Radiological Liquid and Sludge Sample Results (Tanks 7562 and 7860-A; T-1, -2, -3, -4, -9, -30; TH-1, -3, -4; W-1 through W-11 and W-13 through W-15; WC-17; and W-1-A). (sheet 2 of 2)

Sample ID	Depth (in.)	pH	Gross alpha	Gross beta	^{137}Cs	^{60}Co	^{90}Sr	H-3	^{233}U	^{238}U	^{252}Cf	^{238}Pu	^{239}Pu	^{244}Cm	^{241}Am	^{134}Cs	^{228}Th / ^{232}Th	^{232}U	^{152}Eu	^{154}Eu	^{155}Eu	^{14}C
W9/L90	5	9.8	6.0E+01	7.1E+04	6.3E+04	1.1E+02	3.7E+02	1.0E+01	<3	*	<3	<3	<3	<3	*	8.5E+01	*	*	*	*	*	*
W9/S92	NA	NA	1.1E+05	5.0E+06	2.2E+04	7.0E+02	2.2E+06	0.0E+00	3.1E+03	*	*	2.2E+04	9.2E+03	5.4E+04	7.2E+03	2.0E+01	*	*	2.3E+02	4.4E+02	5.2E+01	*
W1/L.7	4	7.9	<3	8.7E+02	1.8E+01	<10	*	3.9E+00	*	*	*	*	*	*	*	*	*	*	*	*	*	*
W1/L.8	9	8.0	<3	8.7E+02	1.8E+01	<10	*	2.5E+00	*	*	*	*	*	*	*	*	*	*	*	*	*	*
W2/L.11	4	8.5	<3	7.1E+02	2.2E+01	<10	*	1.5E+00	*	*	*	*	*	*	*	*	*	*	*	*	*	*
W2/L.11B	4	8.5	<3	7.4E+02	2.0E+01	<10	*	1.7E+00	*	*	*	*	*	*	*	*	*	*	*	*	*	*
W4/L.22	4	9.1	<3	1.6E+03	8.9E+02	<10	*	1.2E+00	*	*	*	*	*	*	*	*	*	*	*	*	*	*
W4/L.119	30	10.0	<3	2.6E+03	1.4E+03	<10	*	2.0E+00	*	*	*	*	*	*	*	*	*	*	*	*	*	*
W4/L.23	54	10.9	<3	2.2E+03	2.1E+03	<13	2.9E+02	2.1E+00	*	*	*	*	*	*	*	*	*	*	*	*	*	*
W4/S24	NA	NA	3.9E+03	3.1E+05	3.1E+04	1.2E+01	8.9E+01	0.0E+00	2.0E+03	2.3E+03	<6	<6	4.4E+02	<7	*	*	*	*	*	*	*	*
W4/I126	NA	NA	6.6E+03	8.7E+04	1.3E+04	*	2.1E+04	3.3E+00	2.7E+03	3.0E+03	<7	<7	2.1E+02	<6	*	*	*	*	*	*	*	*
W10/L.93	4	9.2	5.0E+00	3.1E+04	3.1E+04	2.0E+01	1.2E+03	3.2E+01	<2	<2	<2	<2	<2	<3	*	*	*	*	*	*	*	*
W10/L.94	28	10.5	1.0E+01	7.8E+04	8.3E+04	3.4E+01	7.6E+02	6.8E+01	<2	<2	<2	<2	<2	<3	*	*	*	*	*	*	*	*
W10/L.95	49	10.9	2.0E+01	1.9E+05	2.4E+05	1.4E+02	2.1E+02	1.4E+02	7.0E+00	3.0E+00	<2	2.0E+00	2.0E+00	<3	*	*	*	*	*	*	*	*
W10/I1120	NA	NA	4.1E+04	1.2E+07	1.1E+07	1.4E+03	1.2E+06	9.0E+01	2.1E+03	1.3E+03	<25	6.7E+03	1.1E+01	1.4E+04	*	1.4E+03	*	*	*	*	*	*
W10/S96	NA	NA	8.4E+04	5.3E+06	8.6E+05	1.3E+04	8.6E+06	1.4E+02	<50	*	<50	2.9E+01	8.2E+03	4.7E+04	4.5E+03	*	*	*	4.6E+03	8.0E+03	*	*
7860A/L63	8	*	3.0E+00	<10	4.0E-02	<10	<10	6.1E+00	*	*	*	*	*	*	*	*	*	*	*	*	*	1.8E+00
7860A/L64	16	*	2.0E+00	<10	8.7E-01	<10	<10	5.1E+00	*	*	*	*	*	*	*	*	*	*	*	*	*	1.9E+00
7860A/L65	24	*	3.0E+00	<10	7.9E-01	<10	<10	5.4E+00	*	*	*	*	*	*	*	*	*	*	*	*	*	1.7E+00
7860A/L66	32	*	2.0E+00	<10	9.8E-02	<10	<10	5.7E+00	*	*	*	*	*	*	*	*	*	*	*	*	*	1.4E+00
7860A/L67	40	4.0	<1	7.7E+01	1.0E+01	7.3E+00	2.2E+01	3.3E+01	*	*	*	*	*	*	*	*	*	*	*	*	*	*
7860A/L68	48	3.8	2.0E+00	7.0E+01	9.5E+00	6.3E+00	2.1E+01	3.4E+01	*	*	*	*	*	*	*	*	3.4E-01	*	*	*	*	*
7860A/L69	54	4.0	6.0E+00	9.2E+01	1.0E+01	6.7E+00	2.1E+01	3.3E+01	*	*	*	*	*	*	*	*	8.0E-01	*	*	*	*	*
W3/L.16	4	9.0	6.0E+00	4.9E+02	5.8E+02	<10	4.0E+01	6.9E-01	<5	*	<5	<5	<5	<5	*	*	*	*	*	*	*	*
W3/L.17	60	10.1	1.2E+01	6.7E+02	8.4E+02	1.0E-01	6.4E+01	9.4E-01	<5	*	<5	<5	<5	<5	*	*	*	*	*	*	*	*
W3/L.18	106	11.1	1.7E+01	1.2E+03	1.3E+03	2.4E-01	9.0E+01	1.1E+00	<5	*	<5	<5	<5	<5	*	*	*	*	*	*	*	*
W3/S19	NA	NA	8.4E+03	1.5E+06	4.7E+04	2.4E+01	1.5E+05	2.2E+00	1.1E+03	4.3E+02	<10	1.7E+02	3.9E+03	<10	2.6E+02	*	*	*	*	7.6E+01	*	*
WC17/O101	0	7.6	<10	<20	1.2E+00	*	<1	9.4E-01	*	*	*	*	*	*	*	*	*	*	*	*	*	*
WC17/O102	1	7.6	<10	<20	1.3E-01	*	<1	4.0E-01	*	*	*	*	*	*	*	*	*	*	*	*	*	*
WC17/L103	6	7.6	<10	<20	1.3E+00	*	<1	8.2E-01	*	*	*	*	*	*	*	*	*	*	*	*	*	*
WC17/L104	14	7.6	<10	<20	4.0E-01	*	<1	1.6E-01	*	*	*	*	*	*	*	*	*	*	*	*	*	*
WC17/L105	26	7.9	<10	<20	9.7E-01	*	<1	2.7E-01	*	*	*	*	*	*	*	*	1.6E-02	*	*	*	*	*
WC17/S106	NA	NA	2.7E+03	3.5E+03	1.5E+01	8.2E-01	2.9E+02	9.1E+01	*	*	<3	4.3E+02	6.2E+01	1.6E+03	2.6E+02	*	*	*	*	3.3E+00	5.6E-01	*
W13/L27	4	3.0	7.4E+02	1.4E+06	6.1E+05	1.5E+02	5.5E+05	2.0E+05	*	*	<4	5.5E+02	5.0E+01	<4	*	*	1.2E+02	*	*	1.6E+03	*	*
W13/L28	18	3.0	7.6E+02	1.3E+06	5.0E+05	1.9E+02	5.9E+05	2.0E+03	*	*	<4	5.5E+02	6.9E+01	<4	*	*	1.3E+02	*	*	1.5E+03	*	*
W14/L30	4	8.6	8.3E+03	9.7E+05	4.1E+05	1.1E+03	4.5E+05	2.4E+00	*	*	<50	<150	<20	<100	*	*	8.0E+03	*	*	*	*	*
W14/L31	14	8.5	8.4E+03	1.0E+06	4.1E+05	1.1E+03	4.3E+05	3.0E+00	*	*	<50	<150	<50	<150	*	*	8.2E+02	*	*	*	*	*
W15/L32	4	8.2	2.6E+03	3.4E+06	1.6E+06	1.4E+03	1.7E+06	3.0E+01	1.1E+02	*	<10	2.5E+02	6.3E+02	<25	*	*	1.5E+03	*	*	*	*	*
W15/L33	21	8.2	2.3E+03	3.4E+06	1.5E+06	1.2E+03	1.5E+06	3.2E+01	1.4E+02	*	<10	2.4E+02	5.8E+02	<15	*	*	1.3E+03	*	*	*	*	*
W1A/L1	2	8.8	1.1E+03	1.3E+03	1.4E+02	4.4E+00	3.2E+02	2.4E+00	7.3E+02	5.0E+00	<2	1.9E+01	6.7E+01	9.0E+00	5.4E+01	4.6E+00	*	2.7E+02	*	*	*	*
T30/L121	2	8.7	9.4E+01	2.7E+02	4.0E+00	*	1.5E+01	1.4E+00	<2	4.0E+00	<2	<2	3.5E+00	3.1E+01	<10	*	*	*	*	*	*	*
7562/L97	4	7.4	<1	1.2E+03	1.7E+00	*	1.7E+03	1.4E+00	*	*	*	*	*	*	*	*	*	*	*	*	*	*
7562/S98	NA	NA	<1	8.8E+05	3.8E+03	*	2.2E+05	*	*	*	*	*	*	*	*	*	*	*	*	*	*	*

[a]Asterisk indicates that data are not available.
[b]NA = not applicable.

Note: Liquids-Bq/ml; Sludges-Bq/g

Table D-10. Oak Ridge National Laboratory Underground Storage Tank Physical Characteristics. (sheet 1 of 2)

Average Densities	
	9.0 lb/gal for Liquid
	11.7 lb/gal for Sludge

Tank	Underground Storage Tank Description: Type	Status	Location	Containment: Tank	Containment: Vault	Service	Construction Materials: Tank	Construction Materials: Vault	Cooling Coils	Operating Capacity (gal)	Underground Storage Tank Waste Description: Total Waste (gal)	Total Waste (lb)	% of Operating Capacity	Liquid (gal)	Liquid (lb)	Sludge (gal)	Sludge (lb)	Salt Cake (gal)	Salt Cake (lb)	Slurry (gal)	Slurry (lb)	Powder (gal)	Powder (lb)	Temp. (F)	Estimated Leakage (gal)	Estimated Leakage (Ci)	Heat Output (Btu/hr)	Heat Output (Btu/hr per ton)	Remarks
Totals =>										2,993,785	841,684	8,268,544	40%	641,992	5,968,544	199,692	2,300,000												
2026 - A		Active	Bethel	SSS		1962	SS		No	500																			High Rad. Level Anal. Lab; Building 2026
3001 - B		Inactive	Bethel	SSS		1943 to 1963	SS		No	75																			Hot Lab Drains; Building 3001
3001 - S		Inactive	Bethel	SSS			SS		No	2,000																			Building 3001; May not exist
3003 - A		Inactive	Bethel	C		1943 to 1963	RC		No	16,000																			Building 3003; Empty
3004 - B		Inactive	Bethel	SSS	C	1956	SS	RC	No	30																			Low Intensity Test Reactor; Building 3008
3002 - A		Inactive	Bethel	SSS		1943	SS		No	1,600																			Old Graphite Reactor; Building 3002; Empty
3013		Inactive	Bethel	SSS		1949	SS		No	400																			Building 3013
7503 - A		Inactive	Melton	SSS	C	1962	SS	RC	No	11,000																			Molten Salt Reactor Experiment; Building 7503
7560		Inactive	Melton	SSS		1957 to 1961	SS		No	1,000																			Homogenous Reactor Experiment
7562		Inactive	Melton	SSS		1957 to 1961	SS		No	12,000	378	3,200	3%	378	3,200	Trace													Homogenous Reactor Experiment
7860 - A		Inactive	Melton	SSS		1981 to 1985	SS		No	4,500	2,774	23,100	62%	2,774	23,100														
B - 2 - T		Active	Melton	SSS	C	1965	SS	RC	No	1,870																			Radiochemical EDC; Building 7930
B - 3 - T		Active	Melton	SSS	C	1965	SS	RC	No	1,870																			Radiochemical EDC; Building 7930
C - 1	O1	Active	Bethel	SSS	C	1964	SS	RC	No	50,000	6,939	81,400	14%			6,939	81,400												Evaporator Complex, Building 2531
C - 2	O1	Active	Bethel	SSS	C	1964	SS	RC	No	50,000	45,220	530,400	90%			45,220	530,400												Evaporator Complex, Building 2531
C - 6 - T		Active	Melton	SSS	C	1965	SS	RC	No	700																			Radiochemical EDC; Building 7930
F - 111		Active	Melton	SSS	C	1962	SS	RC	No	125																			Radiochemical EDC; Building 7930
F - 126		Active	Melton	SSS	C	1962	SS	RC	No	1,200																			Radiochemical EDC; Building 7930
F - 201		Active	Bethel	SSS	C	1962	SS	RC	No	40																			High Radiation Examination Lab, Building 3525
F - 501		Active	Bethel	SSS	C	1962	SS	RC	No	200																			High Radiation Examination Lab, Building 3525
H - 209		Inactive	Bethel	SSS		1961	SS		No	2,500																			Condensate and Floor Drains; Building 3517
HFIR		Active	Melton	SSS		1961	SS		No	13,000																			High Flux Isotopes Reactor
S - 223		Active	Bethel	SSS	C	1955	SS2	RC	No	2,500																			3517 Building collection system
S - 324		Active	Bethel	SSS	C	1955	SS2	RC	No	1,000																			3517 Building collection system
S - 424		Inactive	Bethel	SSS/GL	C	1955	SS	RC	No	500																			Building 3517
S - 523		Active	Bethel	SSS	C	1955	SS2	RC	No	1,000																			3517 Building collection system
T - 1	L	Inactive	Melton	SSS		1963 to 1980	CS		No	15,000	11,838	102,000	79%	11,047	92,700	791	9,300												Old Hydrofracture Facility
T - 1 - A		Active	Melton	SSS		1963	SS		No	15,000																			High Flux Isotopes Reactor
T - 2	L	Inactive	Melton	SSS		1963 to 1980	CS		No	15,000	12,253	113,309	82%	11,048	99,209	1,205	14,100												Old Hydrofracture Facility
T - 2 - A		Active	Melton	SSS		1963	SS		No	15,000																			High Flux Isotopes Reactor
T - 3	M	Inactive	Melton	SSS/RL		1963 to 1980	CS/R		No	25,000	4,092	50,400	16%	2,063	17,800	2,029	32,600												Old Hydrofracture Facility
T - 4	M	Inactive	Melton	SSS/RL		1963 to 1980	CS/R		No	25,000	10,669	92,900	43%	9,341	79,200	1,328	13,700												Old Hydrofracture Facility
T - 9	N	Inactive	Melton	SSS		1963 to 1980	CS		No	13,000	1,771	16,700	14%	1,290	11,100	481	5,600												Old Hydrofracture Facility
T - 13		Active	Melton	SSS	C	1979	SS	RC	No	4,000																			New Hydrofracture Facility
T - 14		Inactive	Melton	C		1979	RC		No	48,500																			New Hydrofracture Facility
T - 30		Inactive	Bethel	SSS	C	1961	SS	RC	No	825	40	300	5%	40	300														Cutrum Recovery Facility; Building 4507
TH - 1		Inactive	Bethel	SSS		1948 to 1970	SS		No	2,500	278	2,400	11%	278	2,400														South of Building 3503
TH - 2	K	Inactive	Bethel	SSS		1952 to 1970	SS		No	2,400	72	599	3%	72	599														South of Building 3503
TH - 3		Inactive	Bethel	SSS		1952 to 1970	SS		No	3,300	145	1,200	4%	145	1,200														South of Building 3503
TH - 4	A	Inactive	Bethel	C		1943 to 1970	RC		No	14,000	13,297	134,700	95%	6,982	60,600	6,315	74,100												South of Building 3503

Table D-10. Oak Ridge National Laboratory
Underground Storage Tank
Physical Characteristics.
(sheet 2 of 2)

Average Densities	9.0 lb/gal for Liquid
	11.7 lb/gal for Sludge

Tank	Underground Storage Tank Description: Type	Status	Location	Containment: Tank	Containment: Vault	Service	Construction Materials: Tank	Construction Materials: Vault	Cooling Coils	Operating Capacity (gal)	Underground Storage Tank Waste Description: Total Waste (gal)	Total Waste (lb)	% of Operating Capacity	Liquid (gal)	Liquid (lb)	Sludge (gal)	Sludge (lb)	Salt Cake (gal)	Salt Cake (lb)	Slurry (gal)	Slurry (lb)	Powder (gal)	Powder (lb)	Temp. (F)	Estimated Leakage (gal)	(Ci)	Heat Output (Btu/hr)	(Btu/hr per ton)	Remarks
Totals =>										2,093,785	841,684	8,268,544	40%	641,992	5,968,544	199,692	2,300,000												
W - 1 - A	I	Inactive	Bethel	SSS		1951 to 1986	SS		No	4,000	25	200	1%	25	200														Inleakage; North Tank Farm
W - 1 - I		Inactive	Bethel	SSS		1959	SS		No	500																			
W - 1	B	Inactive	Bethel	C		1943 to 1960	RC		No	4,800	1,213	10,100	25%	1,213	10,100														leaker; North Tank Farm
W - 2	B	Inactive	Bethel	C		1943 to 1960	RC		No	4,800	647	5,400	13%	647	5,400														leaker; North Tank Farm
W - 3	C	Inactive	Bethel	C		1943 to 1960s	RC		No	42,500	34,123	293,900	80%	31,847	267,200	2,276	26,700												Inleakage; North Tank Farm
W - 4	C	Inactive	Bethel	C		1943 to 1960s	RC		No	42,500	21,044	191,800	50%	17,062	145,100	3,982	46,700												Inleakage; North Tank Farm
W - 5	D	Inactive	Bethel	C		1943 to 1978	RC		No	170,000	15,409	149,700	9%	10,278	89,500	5,131	60,200												South Tank Farm; Inleakage
W - 6	D	Inactive	Bethel	C		1943 to 1978	RC		No	170,000	82,175	728,400	48%	77,044	668,200	5,131	60,200												South Tank Farm; Inleakage
W - 7	D	Inactive	Bethel	C		1943 to 1978	RC		No	170,000	12,175	126,600	7%	7,044	66,400	5,131	60,200												South Tank Farm; Inleakage
W - 8	D	Inactive	Bethel	C		1943 to 1978	RC		No	170,000	30,817	313,800	18%	28,244	283,600	2,573	30,200												South Tank Farm; Inleakage
W - 9	D	Inactive	Bethel	C		1943 to 1978	RC		No	170,000	15,563	140,400	9%	12,990	110,200	2,573	30,200												South Tank Farm; Inleakage
W - 10	D	Inactive	Bethel	C		1943 to 1986	RC		No	170,000	77,043	675,000	45%	70,618	599,600	6,425	75,400												South Tank Farm; Inleakage
W - 11	E	Inactive	Bethel	C		1944 to 1948	RC		No	1,500	959	8,200	64%	897	7,500	62	700												South Tank Farm; Leaker; Building 3550
W - 12		Active	Bethel	SSS		1947	SS		No	700																			High Radiation Examination Lab, Building 3525
W - 13	F	Inactive	Bethel	SSS/C		1945 to 1958	SS/RC		No	2,000	457	3,900	23%	457	3,900														North Tank Farm
W - 14	F	Inactive	Bethel	SSS		1945 to 1958	SS		No	2,000	259	2,300	13%	259	2,300														North Tank Farm
W - 15	G	Inactive	Bethel	SSS		1945 to 1958	SS		No	2,000	664	6,000	33%	664	6,000														North Tank Farm
W - 16		Active	Bethel	SSS		1951	SS1		No	1,000																			Segmenting Hot Cell Facility; Building 3026D
W - 17		Inactive	Bethel	SSS		1951	SS		No	1,000																			Leaker
W - 18		Inactive	Bethel	SSS		1951	SS		No	1,000																			Leaker
W - 19		Inactive	Bethel	SSS		1955 to 1960	SS		No	2,250																			Metal Recovery Facility; Building 3505; Empty
W - 20		Inactive	Bethel	SSS		1955 to 1960	SS		No	2,250																			Metal Recovery Facility; Building 3505; Empty
W - 21	OZ	Active	Bethel	SSS	C/SL	1979	SS	RC/SS	No	50,000	22,100	236,400	44%	16,000	165,300	6,100	71,100												Evaporator Complex, Building 2531
W - 22	OZ	Active	Bethel	SSS	C/SL	1979	SS	RC/SS	No	50,000	20,000	179,600	40%	20,000	179,600														Evaporator Complex, Building 2531
W - 23	OZ	Active	Bethel	SSS	C/SL	1979	SS	RC/SS	No	50,000	20,800	228,700	42%	4,400	45,600	16,400	183,100												Evaporator Complex, Building 2531
W - 24	OZ	Active	Melton	SSS	C/SL	1980	SS	RC/SS	No	50,000	47,400	490,700	95%	34,200	352,200	13,200	138,500												Evaporator Service, Hydrofracture Area
W - 25	OZ	Active	Melton	SSS	C/SL	1980	SS	RC/SS	No	50,000	47,400	497,900	95%	24,000	240,600	23,400	257,300												Evaporator Service, Hydrofracture Area
W - 26	OZ	Active	Melton	SSS	C/SL	1980	SS	RC/SS	No	50,000	45,200	499,400	90%	30,100	305,700	15,100	193,700												Evaporator Service, Hydrofracture Area
W - 27	OZ	Active	Melton	SSS	C/SL	1980	SS	RC/SS	No	50,000	46,900	485,300	94%	29,200	295,100	17,700	190,200												Evaporator Service, Hydrofracture Area
W - 28	OZ	Active	Melton	SSS	C/SL	1980	SS	RC/SS	No	50,000	47,400	514,500	95%	43,600	467,300	3,800	47,200												Evaporator Service, Hydrofracture Area
W - 29	OZ	Active	Melton	SSS	C/SL	1980	SS	RC/SS	No	50,000	47,200	423,800	94%	47,200	423,800														Evaporator Service, Hydrofracture Area
W - 30	OZ	Active	Melton	SSS	C/SL	1980	SS	RC/SS	No	50,000	47,200	423,800	94%	47,200	423,800														Evaporator Service, Hydrofracture Area
W - 31	OZ	Active	Melton	SSS	C/SL	1980	SS	RC/SS	No	50,000	46,000	466,000	92%	39,600	398,800	6,400	67,200												Evaporator Service, Hydrofracture Area
WC - 1	H	Inactive	Bethel	SSS		1950 to 1968	SS		No	2,150	375	3,047	17%	375	3,047														Leaker; Isotopes Circle Facility
WC - 2		Active	Bethel	SSS	C	1951	SS	RC	No	1,000																			Isotopes Circle Facility
WC - 3		Active	Bethel	SSS		1951	SS1		No	1,000																			Irr. Mat. Exam. and Testing Facility; Building 3025
WC - 4		Inactive	Bethel	SSS		1944 to 1950s	SS		No	1,700																			
WC - 5		Inactive	Bethel	SSS		1952	SS		No	1,000																			Leaker
WC - 6		Inactive	Bethel	SSS		1952	SS		No	500																			Leaker
WC - 7		Active	Bethel	SSS		1951	SS		No	1,100																			Cell Vent. Filter Pit & G.S. Lab; Building 2533/3504
WC - 8		Inactive	Bethel	SSS		1952	SS		No	1,000																			Leaker
WC - 9		Active	Bethel	SSS		1952	SS		No	2,150																			Radioactive (Hot) Off-Gas (HOG); 3503
WC - 10		Active	Bethel	SSS		1951	SS		No	2,000																			Isotopes Circle Facility
WC - 11		Inactive	Bethel	SSS		1951	SS		No	4,000																			Leaker
WC - 12		Inactive	Bethel	SSS		1951	SS		No	1,000																			Leaker
WC - 13		Inactive	Bethel	SSS		1951	SS		No	1,000																			Leaker
WC - 14		Inactive	Bethel	SSS		1951	SS		No	1,000																			Leaker
WC - 15	J	Inactive	Bethel	SSS		1951 to 1960s	SS		No	1,000	1,000	7,988	100%	1,000	7,988														Leaker; Building 4500
WC - 17	J	Inactive	Bethel	SSS		1951 to 1960s	SS		No	1,000	370	3,100	37%	370	3,100	Trace													Leaker; Building 4500
WC - 19		Active	Bethel	SSS		1955	SS		No	2,250																			OR Research Reactor/Bulk Shielding Reactor
WC - 20		Active	Melton	SSS	C	1976	SS	RC	No	10,000																			Radiochemical EDC; Building 7930

Table D-11. Oak Ridge National Laboratory Underground Storage Tank Chemical Characteristics (pounds). (sheet 1 of 2)

Tank	Total	Total (Dry)	H2O	pH	Organics	Anions CO3	Cl	F	OH	NO3	NO2	PO4	SO4	Cations Al	Ba	Ca	Cr	Fe	Pb	Mg	Ni	K	Se	Si	Ag	Na	Others
Totals =>	8,268,500	2,749,700	5,519,100		10,726	18,009	19,768	6,443	3,261	743,351		20,205	30,697	3,960	213	54,426	466	1,648	588	11,133	113	59,750	62	88	22	318,900	1,445,798
			66.7%		0.1%	0.2%	0.2%	0.1%	0.0%	9.0%		0.2%	0.4%	0.0%	0.0%	0.7%	0.0%	0.0%	0.0%	0.1%	0.0%	0.7%	0.0%	0.0%	0.0%	3.9%	17.5%
2026 - A																											
3001 - B																											
3001 - S																											
3003 - A																											
3004 - B																											
3002 - A																											
3013																											
7503 - A																											
7560																											
7562	3,200		3,200	7.4	0		0	0		1		0	0		0		0		0		0		0	0	0		
7860 - A	23,100	100	23,000	3.9	1		6	0		88		2	2										0	0	0		
B - 2 - T																											
B - 3 - T																											
C - 1	81,400	81,400																									81,400
C - 2	530,400	530,400																									530,400
C - 6 - T																											
F - 111																											
F - 126																											
F - 201																											
F - 501																											
H - 209																											
HFIR																											
S - 223																											
S - 324																											
S - 424																											
S - 523																											
T - 1	102,000	9,300	92,800	9.7	270	60	1	0		2		0	1		1		1		8		2		0	1	0		8,904
T - 1 - A																											
T - 2	113,300	5,700	107,600	9.9	510	220	691	110		1		0	2,002		0		3		5		1		0	1	0		2,166
T - 2 - A																											
T - 3	50,400	14,800	35,600	12.7	520	80	9,450	4,140		1		3	0		2		2		10		2		0	1	0		614
T - 4	92,900	13,800	79,100	11.7	100	230	110	110	13	2		5,804	5,800		1		2		7		2		0	0	0		1,619
T - 9	16,700	2,400	14,400	9.1	50	10	173	40		1		0	380		1		0		3		2		0	0	0		1,689
T - 13																											
T - 14																											
T - 30	300		300	8.7	0		0	0		0		0	0		0		0		0		0		0	0	0		
TH - 1	2,400	100	2,300	1.8	0		0	0		3		1	1		0		0		0		0		0	0	0		85
TH - 2	600		600	2.5	0		0	0		0		0	0		0		0		0		0		0	0	0		3
TH - 3	1,200		1,200	3.4	0		0	0		0		0	0		0		0		0		0		0	0	0		12
TH - 4	134,700	26,600	108,100	7.2	530	40	31	73	17	670		70	3,080		1		14		5		1		0	0	0		22,067

Table D-11. Oak Ridge National Laboratory
Underground Storage Tank
Chemical Characteristics (pounds).
(sheet 1 of 2)

Tank	Total	Total (Dry)	H2O	pH	Organics	Anions								Cations													Others
						CO3	Cl	F	OH	NO3	NO2	PO4	SO4	Al	Ba	Ca	Cr	Fe	Pb	Mg	Ni	K	Se	Si	Ag	Na	
Totals =>	8,268,500	2,749,700	5,519,100		10,726	18,009	19,768	6,443	3,261	743,351		20,205	30,697	3,960	213	54,426	466	1,648	588	11,133	113	59,750	62	88	22	318,900	1,445,798
			66.7%		0.1%	0.2%	0.2%	0.1%	0.0%	9.0%		0.2%	0.4%	0.0%	0.0%	0.7%	0.0%	0.0%	0.0%	0.1%	0.0%	0.7%	0.0%	0.0%	0.0%	3.9%	17.5%
W - 1 - A	200		200	8.8			0	0		0		0	0		0		0		0		0		0	0	0		
W - 1 - I																											
W - 1	10,100		10,100	8.0	0	6	0	0		0		0	0		0		0		0		0		0	0	0		
W - 2	5,400		5,400	10.0	0	3	0	0		0		0	0		0		0		0		0		0	0	0		
W - 3	293,900	9,400	284,500	10.1	390	420	5	5		13		180	130		0		33		2		0		0	2	0		8,220
W - 4	191,800	17,500	174,300	10.0	410	280	3	3		260		22	192		1		31		7		1		0	0	0		16,289
W - 5	149,700	25,000	124,700	10.6	300	820	6	85		2		90	52		8		30		20		3		0	1	0		23,582
W - 6	728,400	43,900	684,500	10.3	590	2,700	54	260		220		200	230		20		147		71		6		0	2	0		39,400
W - 7	126,600	48,300	78,300	10.7	543	740	722	61		26		2	4,033		80		49		20		5		0	0	0		42,020
W - 8	313,800	24,800	289,000	9.7	600	210	133	23		1,180		120	760		1		14		50		5		0	0	0		21,703
W - 9	140,400	30,800	109,600	10.2	450	190	43	8		180		300	120		6		6		20		3		0	0	0		29,473
W - 10	675,000	44,900	630,100	10.2	30	1,940	319	149		3,100		170	650		7		15		41		7		0	1	0		38,470
W - 11	8,200		8,200	7.8	0		0	0		0		0	0		0		0		0		0		0	0	0		2
W - 12																											
W - 13	3,900	100	3,800	3.0	0		0	0		0		0	0		0		0		0		0		0	0	0		130
W - 14	2,300	100	2,200	0.6	0		0	0		0		0	0		0		0		0		0		0	0	0		60
W - 15	6,000	200	5,800	0.2	0		0	0		1		0	0		0		0		0		0		0	0	0		215
W - 16																											
W - 17																											
W - 18																											
W - 19																											
W - 20																											
W - 21	236,400	94,200	142,200	0.6	540		279	134		41,400		670	670	70	9	6,300	14	192	21	1,430	7	3,300	2	0	4	11,500	27,684
W - 22	179,600	179,600																									179,600
W - 23	228,700	115,100	113,600	12.8	790	1,540	130	40	90	7,300		180	290	510	10	10,101	30	350	80	2,900	20	6,200	7	0	5	18,000	66,538
W - 24	490,700	181,100	309,700	13.1	550	2,570	740	140	1,410	74,100		1,440	1,420	233	6	4,002	6	81	22	780	3	4,200	9	70	1	38,100	51,168
W - 25	497,900	210,700	287,200	12.5	690	120	500	100	200	52,000		1,010	1,000	721	21	9,856	20	241	60	1,500	9	5,800	11	0	2	32,600	104,219
W - 26	499,400	178,800	320,600	11.2	1,520	3,010	880	120	40	51,200		1,260	1,250	1,451	20	7,005	30	451	91	2,101	22	15,700	11	3	6	27,000	65,628
W - 27	485,300	169,700	315,600	11.8	550	150	610	120	40	68,200		1,230	1,220	821	10	9,330	11	271	21	1,000	5	3,300	10	0	2	35,400	47,395
W - 28	514,500	213,600	300,900	9.1	330	220	1,800	180	60	134,500		1,830	1,820	42	4	5,500	3	31	10	1,290	3	10,020	3	0	1	38,000	17,961
W - 29	423,800	164,500	259,300	13.0	200	1,020	1,140	190	460	110,300		1,980	1,970	7	0	2	1	1	1	1	0	3,900	2	0	0	43,300	
W - 30	423,800	156,600	267,200	13.3	80	1,230	1,090	190	870	106,100		1,980	1,970	13	0	4	1	1	1	1	0	3,700	2	0	0	39,400	
W - 31	466,000	156,200	309,800	11.7	180	200	850	160	60	92,500		1,660	1,650	91	2	2,326	4	31	11	130	1	3,630	4	3	1	35,600	17,073
WC - 1	3,000		3,000	7.9	0		0	0		0		0	1		0		0		0		0		0	0	0		2
WC - 2																											
WC - 3																											
WC - 4																											
WC - 5																											
WC - 6																											
WC - 7																											
WC - 8																											
WC - 9																											
WC - 10																											
WC - 11																											
WC - 12																											
WC - 13																											
WC - 14																											
WC - 15	8,000		8,000	7.9	0		1	0		0		0	0		0		0		0		0		0	0	0		7
WC - 17	3,100		3,100	7.7	1		0	0		0		0	0		0		0		0		0		0	0	0		
WC - 19																											
WC - 20																											

Table D-12. Oak Ridge National Laboratory Underground Storage Tank Radiological Characteristics. (sheet 1 of 2)

Tank	Total		Pu239		Pu238		U238		U235		U234		U233		Th234		Ra226		Pb210		Pm147		Ce144		Ba137		Cs137		Sr90		Y90		Others	
	(Ci)	(lb)	(Ci)	(lb)	(Ci)	(lb)	(Ci)	(lb)	(Ci)	(lb)	(Ci)	(lb)	(Ci)	(lb)	(Ci)	(lb)	(Ci)	(lb)	(Ci)	(lb)	(Ci)	(lb)	(Ci)	(lb)	(Ci)	(lb)	(Ci)	(lb)	(Ci)	(lb)	(Ci)	(lb)	(Ci)	(lb)
Totals =>	76,760	218,079	103	11	279	0	6	38,532	176	179,518			73	17									214	0			26,292	1	49,616	1				
2026 - A																																		
3001 - B																																		
3001 - S																																		
3003 - A																																		
3004 - B																																		
3002 - A																																		
3013																																		
7503 - A																																		
7560																																		
7562	0	1					0	1																			0	0	0	0				
7860 - A	0	5					0	5																			0	0	0	0				
B - 2 - T																																		
B - 3 - T																																		
C - 1																																		
C - 2																																		
C - 6 - T																																		
F - 111																																		
F - 126																																		
F - 201																																		
F - 501																																		
H - 209																																		
HFIR																																		
S - 223																																		
S - 324																																		
S - 424																																		
S - 523																																		
T - 1	3,785	42	1	0	4	0	0	42					0	0													125	0	3,655	0				
T - 1 - A																																		
T - 2	2,285	29	1	0	1	0	0	29					2	0													203	0	2,079	0				
T - 2 - A																																		
T - 3	3,831	101	2	0	6	0	0	100					3	1													580	0	3,240	0				
T - 4	4,071	28	1	0	4	0	0	27					1	0													366	0	3,700	0				
T - 9	1,036	26	0	0	1	0	0	26					0	0													67	0	967	0				
T - 13																																		
T - 14																																		
T - 30	0	0	0	0	0	0	0	0					0	0													0	0	0	0				
TH - 1	1	0	0	0	0	0	0	0					0	0													0	0	0	0				
TH - 2	0	0					0	0					0	0													0	0	0	0				
TH - 3	0	0	0	0	0	0	0	0					0	0													0	0	0	0				
TH - 4	3	685	0	0	0	0	0	685					0	0													0	0	2	0				

Table D-12. Oak Ridge National Laboratory Underground Storage Tank Radiological Characteristics. (sheet 2 of 2)

Tank	Total		Pu239		Pu238		U238		U235		U234		U233		Th230		Ra226		Pb210		Pm147		Ce144		Ba137		Cs137		Sr90		Y90		Others	
	(Ci)	(lb)	(Ci)	(lb)	(Ci)	(lb)	(Ci)	(lb)	(Ci)	(lb)	(Ci)	(lb)	(Ci)	(lb)	(Ci)	(lb)	(Ci)	(lb)	(Ci)	(lb)	(Ci)	(lb)	(Ci)	(lb)	(Ci)	(lb)	(Ci)	(lb)	(Ci)	(lb)	(Ci)	(lb)	(Ci)	(lb)
Totals =>	76,760	218,079	103	11	279	0	6	38,532	176	179,518			73	17									214	0			26,293	1	49,616	1				
W - 1 - A	0	0	0	0	0	0	0	0					0	0													0	0	0	0				
W - 1 - I																																		
W - 1	0	0					0	0																			0	0						
W - 2	0	0					0	0																			0	0						
W - 3	69	1,680	1	0	0	0	0	1,680					0	0													18	0	49	0				
W - 4	76	15,664	0	0	0	0	2	15,664					1	0													20	0	52	0				
W - 5	50	111	0	0	0	0	0	111					0	0													28	0	21	0				
W - 6	370	415	1	0	0	0	0	415					0	0													101	0	267	0				
W - 7	1,949	3,210	2	0	1	0	0	3,210					0	0													1,346	0	599	0				
W - 8	2,220	565	1	0	1	0	0	565					1	0													1,177	0	1,039	0				
W - 9	917	1,038	3	0	8	0	0	1,038					1	0													88	0	816	0				
W - 10	9,392	874	8	0	27	0	0	873					0	0													1,396	0	7,962	0				
W - 11	0	0					0	0																			0	0	0	0				
W - 12																																		
W - 13	60	0	0	0	0	0	0	0																			30	0	30	0				
W - 14	20	0	0	0	0	0	0	0																			10	0	10	0				
W - 15	230	2	0	0	0	0	0	2					0	0													110	0	120	0				
W - 16																																		
W - 17																																		
W - 18																																		
W - 19																																		
W - 20																																		
W - 21	1,640	27,199	22	1	45	0	0	2,304	24	24,893			8	2									27	0			737	0	776	0				
W - 22																																		
W - 23	6,685	67,225	27	1	72	0	0	3,113	63	64,105			27	6									61	0			1,312	0	5,123	0				
W - 24	2,918	6,923	3	0	4	0	0	515	6	6,408			1	0									9	0			1,103	0	1,788	0				
W - 25	6,815	14,756	9	8	17	0	0	1,235	13	13,512			3	1									16	0			1,498	0	5,259	0				
W - 26	12,981	34,021	12	0	33	0	1	4,952	29	29,064			19	4									36	0			8,026	0	4,826	0				
W - 27	3,546	20,255	4	0	15	0	0	515	19	19,739			1	0									20	0			1,983	0	1,503	0				
W - 28	3,758	10,836	1	0	12	0	0	802	10	10,033			2	0									18	0			2,612	0	1,103	0				
W - 29	1,108	2					0	2															6	0			1,067	0	34	0				
W - 30	941	2					0	2															6	0			903	0	32	0				
W - 31	6,004	12,383	3	0	25	0	0	618	12	11,764			2	0									15	0			1,385	0	4,563	0				
WC - 1																																		
WC - 2																																		
WC - 3																																		
WC - 4																																		
WC - 5																																		
WC - 6																																		
WC - 7																																		
WC - 8																																		
WC - 9																																		
WC - 10																																		
WC - 11																																		
WC - 12																																		
WC - 13																																		
WC - 14																																		
WC - 15																																		
WC - 17	0	0					0	0																			0	0	0	0				
WC - 19																																		
WC - 20																																		

BIBLIOGRAPHY

TANK INFORMATION

Martin Marietta, 1992a, *Federal Facility Agreement Plans and Schedules for Liquid Low-Level Radioactive Waste Tank Systems at Oak Ridge National Laboratory, Oak Ridge, Tennessee*, ES/ER-17&D1, Martin Marietta Energy Systems, Inc., Oak Ridge, Tennessee.

WASTE VOLUMES AND CHEMICAL AND RADIOLOGICAL INFORMATION

Autrey, J. W., Costanzo, D. A., Griest, W. H., Kaiser, L. L., Keller, J. M., Nix, C. E., Tomkins, B. A., 1990, *Sampling and Analysis of the Inactive Waste Storage Tank Contents at ORNL*, ORNL/ER-13, Martin Marietta Energy Systems, Inc., Oak Ridge, Tennessee.

Martin Marietta, 1992b, *Sampling and Analysis of the Inactive Waste Tanks TH-2, WC-1, and WC-15*, ORNL/ER-19, Martin Marietta Energy Systems, Inc., Oak Ridge, Tennessee.

Sears, M. B., J. L. Botts, R. N. Ceo, J. J. Ferrada, W. H. Griest, J. M. Keller, and R. L. Schenley, 1990, *Sampling and Analysis of Radioactive Liquid Wastes and Sludges in the Melton Valley and Evaporator Facility Storage Tanks at ORNL*, ORNL/TM-11652, Martin Marietta Energy Systems, Inc., Oak Ridge, Tennessee.

This page intentionally left blank.

APPENDIX E

SAVANNAH RIVER SITE TANK DATA

APPENDIX LEGENDS

Containment Legend

- Tank
  - Single Steel Shell (SSS)
  - Double Steel Shell (DSS)
  - Concrete (C)
  - Rubber Lined (RL)
  - Glass Lined (GL)
- Vault
  - Octagonal (O)
  - Pillar and Panel (P&P)
  - Partitioned Square (P)
  - Concrete (C)
  - Steel Liner (SL)

Construction Materials Legend

- Carbon Steel (CS)
- Stainless Steel (SS)
  - 347 (SS1)
  - 304L (SS2)
- Reinforced Concrete/Cement (RC)
- Rubber (R)
- Glass (Gl)

Radioactive Isotopes Half Lives

- ^{239}Pu 24,400 years
- ^{238}Pu 86 years
- ^{238}U 4.51×10^9 years
- ^{235}U 7.1×10^8 years
- ^{234}U 2.47×10^5 years
- ^{233}U 1.62×10^5 years
- ^{230}Th 8.0×10^4 years
- ^{226}Ra 1,600 years
- ^{210}Pb 21 years
- ^{147}Pm 2.5 years
- ^{144}Ce 284.9 days
- ^{137}Ba 2.55 minutes
- ^{137}Cs 30.23 years
- ^{90}Sr 28.1 years
- ^{90}Y 64 hours

Table E-1. Savannah River Site Underground Storage Tank Physical Characteristics.

Assumed Densities		
	9.2	lb/gal Liquid
	11.7	lb/gal for Sludge
	15.8	lb/gal for Salt Cake

Tank	Underground Storage Tank Descriptions: Type	Status	Location	Containment	Service	Construction Materials	Cooling Coils	Operating Capacity (gal)	Underground Storage Tank Waste Description (As of November 1991): Total Waste (gal)	Total Waste (lb)	% of Operating Capacity	Liquid (gal)	Liquid (lb)	Sludge (gal)	Sludge (lb)	Salt Cake (gal)	Salt Cake (lb)	Slurry (gal)	Slurry (lb)	Powder (gal)	Powder (lb)	Temp. (F)	Estimated Leakage (gal)	Estimated Leakage (Ci)	Heat Output (Btu/hr)	Heat Output (Btu/hr per ton)	Remarks
Totals =>								58,620,000	33,986,000	419,174,000	58%	15,465,000	142,278,000	3,838,000	44,904,600	14,683,000	231,991,400						20	530	5,076,260	24.2	
1	A	Inactive	F Area	DSS/C	1953	CS/RC	Yes	750,000	514,000	7,386,300	69%	107,000	984,400	7,000	81,900	400,000	6,320,000					131			126,900	34.4	
2	A	Inactive	F Area	DSS/C	1953	CS/RC	Yes	750,000	544,000	8,479,800	73%	15,000	138,000	4,000	46,800	525,000	8,295,000					127			37,080	8.7	
3	A	Inactive	F Area	DSS/C	1953	CS/RC	Yes	750,000	553,000	8,714,400	74%	1,000	9,200	4,000	46,800	548,000	8,658,400					140			62,150	14.3	
4	A	Inactive	F Area	DSS/C	1953	CS/RC	Yes	750,000	563,000	5,739,900	75%	404,000	3,716,800	127,000	1,485,900	34,000	537,200					127			299,600	104.4	
5	A	Inactive	F Area	DSS/C	1953	CS/RC	Yes	750,000	54,000	631,800	7%			54,000	631,800							145			166,200	526.1	
6	A	Inactive	F Area	DSS/C	1953	CS/RC	Yes	750,000	22,000	257,400	3%			22,000	257,400							147			161,800	1257.2	
7	A	Inactive	F Area	DSS/C	1953	CS/RC	Yes	750,000	402,000	4,250,900	54%	181,000	1,665,200	221,000	2,585,700							113			139,200	65.5	
8	A	Inactive	F Area	DSS/C	1953	CS/RC	Yes	750,000	163,000	1,907,100	22%			163,000	1,907,100							135			97,990	102.8	
9	A	Inactive	H Area	DSS/C	1953	CS/RC	Yes	750,000	541,000	8,478,600	72%	8,000	73,600	4,000	46,800	529,000	8,358,200					118			30,670	7.2	Salt Storage
10	A	Inactive	H Area	DSS/C	1953	CS/RC	Yes	750,000	253,000	3,981,000	34%			4,000	46,800	249,000	3,934,200					120			15,020	7.5	Salt Storage
11	A	Inactive	H Area	DSS/C	1953	CS/RC	Yes	750,000	437,000	4,460,400	58%	261,000	2,401,200	176,000	2,059,200							113			154,700	69.4	High-heat sludge storage
12	A	Inactive	H Area	DSS/C	1953	CS/RC	Yes	750,000	217,000	2,518,900	29%	8,000	73,600	209,000	2,445,300							127			172,300	136.8	High-heat sludge storage
13	B	Inactive	H Area	DSS/C	1956	CS/RC	Yes	1,030,000	881,000	9,112,700	86%	478,000	4,397,600	403,000	4,715,100							160			257,800	56.6	Evaporator feed, sludge storage
14	B	Inactive	H Area	DSS/C	1956	CS/RC	Yes	1,030,000	179,000	2,710,900	17%	1,000	9,200	27,000	315,900	151,000	2,385,800					100			25,250	18.6	Sludge and salt storage
15	B	Inactive	H Area	DSS/C	1956	CS/RC	Yes	1,030,000	238,000	2,782,100	23%	1,000	9,200	237,000	2,772,900							115			167,400	120.3	Sludge storage
16	B	Inactive	H Area	DSS/C	1956	CS/RC	Yes	1,030,000															20	530			High-level waste removed, tank interior cleaned, initial annulus cleaning complete.
17	C	Inactive	F Area	SSS/C	1958	CS/RC	No	1,300,000	163,000	1,504,600	13%	161,000	1,481,200	2,000	23,400							72			11	0.0	Waste removed
18	C	Inactive	F Area	SSS/C	1958	CS/RC	No	1,300,000	44,000	474,800	3%	16,000	147,200	28,000	327,600							70			197	0.8	Waste essentially removed, residual sludge remains.
19	C	Inactive	F Area	SSS/C	1958	CS/RC	No	1,300,000	290,000	2,803,800	22%	257,000	2,364,400	20,000	234,000	13,000	205,400					72			566	0.4	
20	C	Inactive	F Area	SSS/C	1958	CS/RC	No	1,300,000	35,000	322,000	3%	35,000	322,000									66			705	4.4	Waste removed
21	C	Inactive	H Area	SSS/C	1961	CS/RC	No	1,300,000	591,000	5,472,200	45%	577,000	5,308,400	14,000	163,800							73			193	0.1	Waste removed, residual sludge remains, receives dilute radioactive waste containing only 1-2% solids from RBOF/RRF.
22	C	Inactive	H Area	SSS/C	1961	CS/RC	No	1,300,000	161,000	1,631,200	12%	101,000	929,200	60,000	702,000							68			304	0.4	Waste removed, residual sludge remains, receives dilute radioactive waste containing only 1-2% solids from RBOF/RRF.
23	C	Inactive	H Area	SSS/C	1961	CS/RC	No	1,300,000	525,000	4,937,500	40%	482,000	4,434,400	43,000	503,100							72					Waste removed, residual sludge remains, receives dilute radioactive waste containing only 1-2% solids from RBOF/RRF and wash water.
24	C	Inactive	H Area	SSS/C	1961	CS/RC	No	1,300,000	270,000	2,494,000	21%	266,000	2,447,200	4,000	46,800							79			311	0.2	Waste removed, residual sludge remains. Receives diverted and recycled overhead from 242-H evaporator
25	D	Active	F Area	DSS/C	1980	CS/RC	Yes	1,300,000	1,259,000	17,806,600	97%	316,000	2,907,200			943,000	14,899,400					113			53,370	6.0	Waste removed, residual sludge remains
26	D	Active	F Area	DSS/C	1980	CS/RC	Yes	1,300,000	1,159,000	11,335,300	89%	890,000	8,188,000	269,000	3,147,300							136			1,901	0.3	Concentrate receiver
27	D	Active	F Area	DSS/C	1980	CS/RC	Yes	1,300,000	1,274,000	15,499,400	98%	699,000	6,430,800	4,000	46,800	571,000	9,021,800					111			12,290	1.6	Evaporator feed and LHW receiver
28	D	Active	F Area	DSS/C	1980	CS/RC	Yes	1,300,000	1,192,000	18,827,000	92%	1,000	9,200			1,191,000	18,817,800					91			153,900	16.3	Concentrate receiver
29	D	Inactive	H Area	DSS/C	1972	CS/RC	Yes	1,300,000	1,245,000	18,054,000	96%	245,000	2,254,000			1,000,000	15,800,000					120			239,200	26.5	Salt receiver
30	D	Active	H Area	DSS/C	1972	CS/RC	Yes	1,300,000	1,254,000	11,576,400	96%	1,248,000	11,481,600			6,000	94,800					99			121,300	21.0	HHW concentrate receiver
31	D	Inactive	H Area	DSS/C	1972	CS/RC	Yes	1,300,000	1,190,000	17,548,000	92%	190,000	1,748,000			1,000,000	15,800,000					124			203,400	23.2	HHW concentrate receiver
32	D	Active	H Area	DSS/C	1972	CS/RC	Yes	1,300,000	1,251,000	11,901,700	96%	1,094,000	10,064,800	157,000	1,836,900							201			472,200	79.4	HHW concentrate receiver/sludge storage
33	D	Active	F Area	DSS/C	1972	CS/RC	Yes	1,300,000	1,217,000	13,449,900	94%	824,000	7,580,800	83,000	971,100	310,000	4,898,000					106			100,200	14.9	High-heat waste storage/receiver
34	D	Active	F Area	DSS/C	1972	CS/RC	Yes	1,300,000	1,246,000	12,887,500	96%	960,000	8,832,000	113,000	1,322,100	173,000	2,733,400					117			227,600	35.3	High-heat waste storage/receiver
35	D	Active	H Area	DSS/C	1977	CS/RC	Yes	1,300,000	1,266,000	11,777,200	97%	1,214,000	11,168,800	52,000	608,400							181			526,400	89.4	HHW concentrate receiver/sludge storage
36	D	Inactive	H Area	DSS/C	1977	CS/RC	Yes	1,300,000	1,269,000	18,499,200	98%	235,000	2,162,000			1,034,000	16,337,200					111			197,700	21.4	HHW concentrate receiver
37	D	Inactive	H Area	DSS/C	1977	CS/RC	Yes	1,300,000	1,262,000	18,032,200	97%	289,000	2,658,800			973,000	15,373,400					90			137,400	15.2	HHW concentrate receiver
38	D	Active	H Area	DSS/C	1982	CS/RC	Yes	1,300,000	884,000	14,020,000	68%	(8,000)	(73,600)			892,000	14,093,600					104			5,516	0.8	HHW concentrate receiver
39	D	Active	H Area	DSS/C	1982	CS/RC	Yes	1,300,000	989,000	9,351,300	76%	888,000	8,169,600	101,000	1,181,700							124			449,600	96.2	HHW concentrate receiver/sludge storage
40	D	Active	H Area	DSS/C	1982	CS/RC	Yes	1,300,000	437,000	4,452,900	34%	264,000	2,428,800	173,000	2,024,100							82			1,384	0.6	Sludge processing/DWPF sludge feed
41	D	Active	H Area	DSS/C	1982	CS/RC	Yes	1,300,000	1,246,000	19,587,800	96%	15,000	138,000			1,231,000	19,449,800					88			41,990	4.3	LLW concentrate receiver
42	D	Active	H Area	DSS/C	1982	CS/RC	Yes	1,300,000	780,000	4,128,500	60%	399,000	3,670,800	381,000	4,457,700							99			100,400	24.7	Sludge processing
43	D	Active	H Area	DSS/C	1982	CS/RC	Yes	1,300,000	1,030,000	9,878,500	79%	869,000	7,994,800	161,000	1,883,700							109			3,699	0.7	Evaporator feed and low-heat waste receiver
44	D	Active	F Area	DSS/C	1982	CS/RC	Yes	1,300,000	1,268,000	18,430,600	98%	243,000	2,235,600			1,025,000	16,195,000					122			39,600	4.3	Concentrate receiver
45	D	Active	F Area	DSS/C	1982	CS/RC	Yes	1,300,000	1,221,000	18,011,400	94%	194,000	1,784,800			1,027,000	16,226,600					117			36,130	4.0	Concentrate receiver
46	D	Active	F Area	DSS/C	1982	CS/RC	Yes	1,300,000														79					Spare tank (empty)
47	D	Active	F Area	DSS/C	1982	CS/RC	Yes	1,300,000	1,204,000	17,359,600	93%	98,000	901,600	248,000	2,901,600	858,000	13,556,400					124			30,200	3.5	Concentrate receiver
48	D	Active	H Area	DSS/C	1982	CS/RC	Yes	1,300,000	144,000	1,324,800	11%	144,000	1,324,800									82			1,327	2.0	Salt processing tank for in-tank precipitation (salt decontamination)
49	D	Active	H Area	DSS/C	1982	CS/RC	Yes	1,300,000	164,000	1,508,800	13%	164,000	1,508,800									77					Salt processing tank for in-tank precipitation (precipitate receiver/DWPF feed tank)
50	D	Active	H Area	DSS/C	1982	CS/RC	Yes	1,300,000	304,000	2,796,800	23%	304,000	2,796,800									81					Salt processing tank for in-tank precipitation (filtrate receiver/saltstone feed tank)
51	D	Active	H Area	DSS/C	1982	CS/RC	Yes	1,300,000	589,000	6,076,300	45%	326,000	2,999,200	263,000	3,077,100							90			3,206	1.1	Sludge processing/DWPF sludge feed

Table E-2. Savannah River Site
Underground Storage Tank
Chemical Compositions (pounds).

Tank	Total	Total (Dry)	H20	pH	Organics	Anions								Cations													Other
						CO3	Cl	F	OH	NO3	NO2	PO4	SO4	Al	Ba	Ca	Cr	Fe	Pb	Mg	Ni	K	Se	Si	Ag	Na	
Totals =>	419,175,100	278,609,100	140,566,000			4,973,700	32,400	213,800	20,704,200	124,729,600	2,957,300	170,900	15,134,300	9,156,600		325,100	64,900	2,770,700		37,100	227,200			41,500		71,117,700	25,951,800
			33.5%			1.2%	0.0%	0.1%	4.9%	29.8%	0.7%	0.0%	3.6%	2.2%		0.1%	0.0%	0.7%		0.0%	0.1%			0.0%		17.0%	6.2%
1	7,385,700	6,237,700	1,148,000			104,400	200	5,700	224,600	3,110,300	48,700	1,200	404,300	131,300		600	200	5,100		100	400			100		1,607,400	593,100
2	8,480,100	7,825,100	655,000			128,200		7,500	227,900	3,970,700	51,300	200	528,100	153,100		300	100	2,900			200					1,982,200	772,400
3	8,713,800	8,127,800	586,000			132,800		7,800	231,000	4,131,600	52,100		550,900	158,000		300		2,900			200					2,054,100	806,100
4	5,740,300	2,249,300	3,491,000			48,300	900	600	453,400	626,100	44,100	4,500	44,400	162,800		10,800	2,000	91,700		1,200	7,500			1,400		551,700	197,900
5	631,300	284,300	347,000			5,700			109,800	5,100			900	44,700		4,600	600	39,000		500	3,200			600		6,600	63,000
6	257,900	115,900	142,000			2,300			44,700	2,100			400	18,200		1,900	300	15,900		200	1,300			200		2,700	25,700
7	4,250,200	1,646,200	2,604,000			35,200	400		530,500	181,100	18,300	2,000	7,300	204,600		18,700	2,800	159,500		2,200	13,100			2,400		210,200	257,900
8	1,907,200	858,200	1,049,000			17,100			331,400	15,300			2,700	135,100		13,800	1,900	117,700		1,600	9,700			1,800		19,900	190,200
9	8,478,600	7,865,600	613,000			128,700		7,600	226,400	3,994,600	51,000	100	531,900	153,400		300	100	2,900			200					1,990,100	778,300
10	3,981,200	3,703,200	278,000			60,500		3,600	109,200	1,877,100	23,600		250,300	73,500		300		2,900			200					933,200	368,800
11	4,460,100	1,623,100	2,837,000			35,800	600	100	475,000	247,800	26,400	2,900	8,200	176,800		14,900	2,400	127,100		1,700	10,400			1,900		285,700	205,400
12	2,518,700	1,121,700	1,397,000			22,500			428,500	26,700	800	100	3,600	174,100		17,700	2,500	150,900		2,000	12,400			2,300		33,700	243,900
13	9,113,000	3,397,000	5,716,000			74,100	1,000	100	1,033,900	461,300	48,400	5,300	16,300	390,700		34,100	5,400	290,900		3,900	23,900			4,400		533,000	470,300
14	2,710,900	2,377,900	333,000			39,400		2,200	116,600	1,141,500	14,400		152,200	65,100		2,300	300	19,500		300	1,600			300		569,900	252,300
15	2,782,400	1,250,400	1,532,000			25,000			482,300	23,100	100		3,900	196,500		20,100	2,800	171,100		2,300	14,000			2,600		30,000	276,600
16																											
17	1,504,900	439,900	1,065,000			10,900	300		76,300	142,800	16,300	1,800	3,300	20,800		200	200	1,400			100					163,200	2,300
18	475,200	190,200	285,000			4,000			64,100	16,800	1,600	200	800	25,100		2,400	400	20,200		300	1,700			300		19,600	32,700
19	2,804,200	983,200	1,821,000			22,300	500	300	161,300	327,600	27,200	2,800	18,600	50,700		1,700	600	14,400		200	1,200			200		311,200	42,400
20	322,300	93,300	229,000			2,300	100		15,700	31,000	3,500	400	700	4,200												35,400	
21	5,472,100	1,613,100	3,859,000			39,700	1,200	200	287,500	512,500	58,400	6,400	11,900	80,100		1,200	900	10,100		100	800			200		585,600	16,300
22	1,631,200	585,200	1,046,000			13,000	200		167,300	95,100	10,200	1,100	3,000	61,700		5,100	800	43,300		600	3,600			700		109,500	70,000
23	4,937,200	1,512,200	3,425,000			36,500	1,000	100	303,800	431,100	48,800	5,300	10,500	92,800		3,600	1,100	31,000		400	2,500			500		493,000	50,200
24	2,493,500	730,500	1,763,000			18,000	600	100	127,500	236,000	26,900	2,900	5,400	34,900		300	400	2,900			200					269,700	4,700
25	17,807,000	14,789,000	3,018,000			248,600	700	13,600	524,600	7,387,500	121,400	3,500	954,200	303,400			400									3,852,000	1,379,100
26	11,334,900	3,790,900	7,544,000			87,300	1,900	200	946,400	813,800	90,100	9,800	22,500	328,600		22,800	4,300	194,200		2,600	15,900			2,900		933,600	314,000
27	15,499,300	10,330,300	5,169,000			184,600	1,500	8,400	553,700	4,923,400	124,900	7,700	588,100	247,300		300	900	2,900			200					2,846,700	839,700
28	18,827,000	17,616,000	1,211,000			287,700		17,000	483,800	8,977,600	113,000		1,197,100	336,000												4,462,100	1,741,700
29	18,054,400	15,442,400	2,612,000			257,700	500	14,400	515,800	7,754,200	119,600	2,700	1,010,100	311,100			300									3,993,600	1,462,400
30	11,576,400	3,418,400	8,158,000			84,100	2,600	400	562,700	1,150,900	126,900	13,800	31,300	149,800			1,600									1,285,500	8,800
31	17,547,700	15,295,700	2,252,000			254,100	400	14,300	491,200	7,705,500	114,000	2,100	1,009,000	304,500			200									3,938,000	1,462,400
32	11,901,300	3,745,300	8,156,000			89,000	2,300	300	810,300	984,000	110,700	12,100	24,700	260,000		13,300	3,300	113,300		1,500	9,300			1,700		1,126,300	183,200
33	13,449,800	7,219,800	6,230,000			138,200	1,700	4,700	664,500	3,074,300	112,800	9,100	329,600	254,000		7,000	2,000	59,900		800	4,900			900		2,005,200	550,200
34	12,887,800	5,714,800	7,173,000			117,300	2,000	2,700	730,900	2,165,100	113,600	10,600	195,200	256,400		9,600	2,600	81,600		1,100	6,700			1,200		1,633,300	384,900
35	11,776,700	3,512,700	8,264,000			85,900	2,600	300	650,700	1,080,400	122,900	13,400	25,400	187,200		4,400	2,200	37,500		500	3,100			600		1,234,900	60,700
36	18,499,600	15,918,600	2,581,000			265,200	500	14,800	525,200	8,001,600	121,800	2,600	1,044,100	319,500			300									4,110,900	1,512,100
37	18,032,500	15,160,500	2,872,000			254,100	600	14,000	524,600	7,589,700	121,500	3,200	983,800	308,700			400									3,937,000	1,422,900
38	14,020,400	13,170,400	850,000			214,900		12,700	358,400	6,716,100	83,800	(100)	896,400	250,600												3,333,100	1,304,500
39	9,350,900	2,900,900	6,450,000			69,400	1,900	200	604,000	796,200	89,900	9,800	19,600	189,100		8,600	2,300	72,900		1,000	6,000			1,100		911,000	117,900
40	4,453,300	1,615,300	2,838,000			35,700	600	100	470,200	250,100	26,700	2,900	8,200	174,700		14,700	2,400	124,900		1,700	10,300			1,900		288,300	201,900
41	19,587,800	18,244,800	1,343,000			298,200		17,600	506,300	9,291,500	118,200	200	1,237,600	348,900												4,626,100	1,800,200
42	8,128,700	3,070,700	5,058,000			66,500	800	100	953,700	389,300	40,400	4,400	14,400	363,100		32,300	5,000	275,100		3,700	22,600			4,200		450,400	444,700
43	9,877,900	3,165,900	6,712,000			74,500	1,800	200	717,400	785,000	87,900	9,600	20,200	236,600		13,600	3,000	116,200		1,600	9,500			1,800		899,100	187,900
44	18,430,900	15,806,900	2,624,000			263,600	500	14,700	525,100	7,940,900	121,800	2,700	1,035,200	317,900			300									4,085,200	1,499,000
45	18,011,400	15,705,400	2,306,000			260,800	400	14,700	503,900	7,912,500	117,000	2,100	1,036,200	312,600			200									4,043,100	1,501,900
46																											
47	17,360,100	14,256,100	3,104,000			239,800	200	12,300	896,400	6,577,000	91,300	1,100	868,500	459,100		21,000	3,100	179,000		2,400	14,700			2,700		3,343,300	1,544,200
48	1,325,100	384,100	941,000			9,500	300		64,600	127,600	14,600	1,600	2,900	17,100			200									145,700	
49	1,508,500	437,500	1,071,000			10,900	300		73,600	145,300	16,600	1,800	3,300	19,500			200									166,000	
50	2,797,100	811,100	1,986,000			20,100	600	100	136,500	269,300	30,800	3,400	6,200	36,100			400									307,600	
51	6,076,600	2,254,600	3,822,000			49,300	700	100	681,000	313,500	33,000	3,600	10,900	256,600		22,300	3,500	189,900		2,600	15,600			2,900		362,100	307,000

Table E-3. Savannah River Site Underground Storage Tank Radionuclide Composition.

Tank	Total		Pu239		Pu238		U238		U235		U234		U233		Th230		Ra226		Ra226		Pm147		Cs144		Ba137		Cs137		Sr90		Y90		Others	
	(Ci)	(lb)	(Ci)	(lb)	(Ci)	(lb)	(Ci)	(lb)	(Ci)	(lb)	(Ci)	(lb)	(Ci)	(lb)	(Ci)	(lb)	(Ci)	(lb)	(Ci)	(lb)	(Ci)	(lb)	(Ci)	(lb)	(Ci)	(lb)	(Ci)	(lb)	(Ci)	(lb)	(Ci)	(lb)	(Ci)	(lb)
Totals =>	537,918,000	380,070	2,570	92.3			57	372,000	2.4	2,490											25,417,588	57.6	2,785,500	1,928			131,417,700	3,347	126,736,000	2,028	126,822,500	0.513	124,683,000	46.1
1	13,970,000	1,190	10	0.2			0	1,000	0.0	10											6,800						6,130,000	156	1,096,000	18	1,096,000	0.004	5,641,000	2.1
2	4,181,000	60																			446						2,067,000	53	105,500	2	106,000	0.000	1,902,000	0.7
3	7,003,000	90																			1,297						3,450,000	88	188,800	3	189,000	0.001	3,174,000	1.2
4	30,070,000	15,400	100	3.7			2	15,000	0.1	100											458,900	1.0	500	0.000			5,314,000	135	9,701,000	155	9,704,000	0.039	4,891,000	1.8
5	15,590,000	6,170	40	1.5			1	6,000	0.0	40											71,080	0.2					388,100	10	7,388,000	118	7,390,000	0.030	353,000	0.1
6	15,250,000	3,150	20	0.7			0	3,000	0.0	20											90,630	0.2					521,400	13	7,076,000	113	7,078,000	0.029	484,000	0.2
7	13,060,000	26,280	180	6.4			4	26,000	0.2	170											25,080	0.1					410,800	10	6,121,000	98	6,123,000	0.025	380,000	0.1
8	9,280,000	19,210	130	4.7			3	19,000	0.1	130											95,970	0.2					338,700	9	4,266,000	68	4,267,000	0.017	312,000	0.1
9	3,466,000	50																			522						1,731,000	44	70,800	1	71,000	0.000	1,593,000	0.6
10	1,699,000	20																			344						852,200	22	31,300	1	31,000	0.000	784,000	0.3
11	14,770,000	21,270	150	5.2			3	21,000	0.1	140											348,200	0.8					387,400	10	6,837,000	109	6,838,000	0.028	359,000	0.1
12	16,250,000	25,310	170	6.2			4	25,000	0.2	170											122,200	0.3					546,800	14	7,540,000	121	7,542,000	0.031	499,000	0.2
13	25,830,000	48,590	340	11.9			7	48,000	0.3	320											89,770	0.2	3200	0.002			5,218,000	133	7,855,000	126	7,857,000	0.032	4,807,000	1.8
14	2,649,000	3,050	20	0.7			0	3,000	0.0	20											1,127						859,600	22	498,800	8	499,000	0.002	790,000	0.3
15	15,710,000	28,330	200	6.9			4	28,000	0.2	190											71,440	0.2					423,200	11	7,416,000	118	7,416,000	0.030	385,000	0.1
16																																		
17	2,000																				31						100		400				1,000	0.0
18	21,000																				203						8,200		2,700		3,000	0.000	7,000	0.0
19	63,000	3,020	20	0.7			0	3,000	0.0	20											15						32,900	1	600		1,000	0.000	30,000	0.0
20	30,000																				9						40,300	1	1,200		1,000	0.000	37,000	0.0
21	18,000	2,010	10	0.5			0	2,000	0.0	10											11						2,100		7,300		7,000	0.000	2,000	0.0
22	33,000																				11						12,500		4,300		4,000	0.000	12,000	0.0
23		2,010	10	0.5			0	2,000	0.0	10																								
24	35,000																				8						17,800		500		500	0.000	16,000	0.0
25	6,062,000	80																			4,317						3,087,000	79	64,800	1	65,000	0.000	2,841,000	1.1
26	217,000	7,050	50	1.7			1	7,000	0.0	50											48						111,800	3	900		1,000	0.000	103,000	0.0
27	1,396,000	20																			736						713,800	18	12,600		13,000	0.000	656,000	0.2
28	17,490,000	230																			7,528						8,944,000	228	149,900	2	150,000	0.001	8,235,000	3.0
29	27,180,000	5,390	30	1.2			1	5,000	0.0	30											44,430	0.1					13,820,000	352	304,200	5	304,000	0.001	12,707,000	4.7
30	13,890,000	180																			181,100	0.4	15400	0.011			6,986,000	178	119,900	2	120,000	0.000	6,468,000	2.4
31	23,120,000	310																			42,840	0.1	100	0.000			11,750,000	299	261,500	4	262,000	0.001	10,804,000	4.0
32	49,350,000	430																			4,057,000	9.2	333700	0.369			6,729,000	171	15,560,000	249	15,560,000	0.063	6,910,000	2.6
33	11,520,000	110																			1,532,000	3.5	235800	0.163			2,934,000	75	1,903,000	30	1,903,000	0.008	3,012,000	1.1
34	25,470,000	230																			3,223,000	7.3	535800	0.371			5,334,000	136	5,382,000	86	5,383,000	0.022	5,612,000	2.1
35	55,940,000	32,720	220	7.9			5	32,000	0.2	210											4,915,000	11.1	711300	0.492			9,305,000	237	15,750,000	252	15,760,000	0.064	9,498,000	3.5
36	22,500,000	300																			79,860	0.2	1300	0.001			11,434,000	291	234,800	4	232,000	0.001	10,522,000	3.9
37	15,670,000	210																			102,000	0.2	4900	0.003			7,917,000	202	173,900	3	174,000	0.001	7,298,000	2.7
38	626,000	10																			132						318,100	8	7,500		7,000	0.000	293,000	0.1
39	51,211,000	380																			9,787,000	22.2	743500	0.515			4,117,000	105	15,860,000	253	15,870,000	0.064	4,833,000	1.8
40	150,000																				1,395						53,000	1	18,800		19,000	0.000	53,000	0.0
41	4,767,000	19,200	130	4.7			3	19,000	0.1	130											2,278						2,426,000	62	33,200	1	33,000	0.000	2,232,000	0.8
42	9,384,000	10,150	70	2.5			2	10,000	0.1	70											43,790	0.1					138,100	4	4,537,000	73	4,538,000	0.018	127,000	0.0
43	417,000	13,100	90	3.2			2	13,000	0.1	90											134						294,300	5	12,000		12,000	0.000	188,000	0.1
44	4,504,000	6,100	40	1.5			1	6,000	0.0	40											1,822						2,312,000	59	31,400	1	31,000	0.000	2,128,000	0.8
45	4,104,000	50																			2,557						2,093,000	53	41,200	1	41,000	0.000	1,926,000	0.7
46																																		
47	3,428,000	50																			2,857						1,741,000	44	41,500	1	41,000	0.000	1,602,000	0.6
48	150,000	12,090	80	3.0			2	12,000	0.1	80											13						76400	2	1,900		2,000	0.000	70,000	0.0
49		21,150	150	5.2			3	21,000	0.1	140																								
50																																		
51	340,000	45,320	310	11.2			7	45,000	0.3	300											1,657						116,100	3	57,800	1	58,000	0.000	106,000	0.0

BIBLIOGRAPHY

TANK INFORMATION

DOE-SR, 1989, *Savannah River Waste Management Program Plan - FY 1990*, DOE/SR-WM-90-1, U.S. Department of Energy, Savannah River Operations Office, Aiken, South Carolina.

WASTE VOLUMES

Fish, D. L., 1991, *Waste Management Technology Monthly Report (U) November 1991*, WSRC-RP-91-78-11B, Westinghouse Savannah River Company, Aiken, South Carolina.

CHEMICAL INFORMATION

DOE-SR, 1989, *Savannah River Waste Management Program Plan - FY 1990*, DOE/SR-WM-90-1, U.S. Department of Energy, Savannah River Operations Office, Aiken, South Carolina.

RADIOLOGICAL INFORMATION

Fish, D. L., 1991, *Waste Management Technology Monthly Report (U) November 1991*, WSRC-RP-91-78-11B, Westinghouse Savannah River Company, Aiken, South Carolina.

This page intentionally left blank.

DISTRIBUTION

Number of copies

OFFSITE

3	U.S. Department of Energy-Headquarters	
	S. M. Gibson	EM-552
	K. E. Hain	EM-55
	J. M. Lankford	EM-552
2	U.S. Department of Energy, Albuquerque Field Office P.O. Box 5400 Albuquerque, New Mexico 87115	
	D. H. Bandy	
	P. A. Saxman	
1	U.S. Department of Energy, Chicago Field Office 9800 South Cass Avenue Argonne, Illinois 60439	
	J. C. Haugen	
1	U.S. Department of Energy, Idaho Field Office 785 DOE Place Idaho Falls, Idaho 83402	
	W. Fitch	
1	U.S. Department of Energy, Oak Ridge Field Office P.O. Box E Oak Ridge, Tennessee 37831	
	J. O. Moore	
1	U.S. Department of Energy, San Francisco Field Office 1333 Broadway Oakland, California 94612	
	W. Holman	

DISTRIBUTION (cont.)

Number of copies

OFFSITE

1 U.S. Department of Energy,
Savannah River Field Office
P.O. Box A
RFD #1, Bldg. 703A, Rm. E208 North
Aiken, South Carolina 290802

M. G. O'Rear

2 Argonne National Laboratory
9700 South Cass Avenue
Argonne, Illinois 60439-4837

J. E. Helt
G. F. Vandegrift

2 Bovay Northwest, Inc.
660 Swift, Suite D
Richland, Washington 99352

T. J. McLaughlin
J. K. Rouse

2 Brookhaven National Laboratory
Bldg. 703-50 Rutherford
Upton, New York, 11973

P. Colombo
P. D. Kalb

1 Ebasco Environmental, Inc.
1201 Jadwin Ave.
Suite 202
Richland, Washington 99352

R. L. Treat

3 EG&G Idaho
P.O. Box 1625
Idaho Falls, Idaho 83415

G. F. Andrews
K. Koller
K. Kostelnik

DISTRIBUTION (cont.)

Number of copies

OFFSITE

2 Iowa State University
108 Office & Laboratory Building
Ames, Iowa 50011

J. Corones
W. Haas

1 Lawrence Livermore National Laboratories
7000 East Avenue, MS: L-207
Livermore, California 94550

A. C. Heywood

2 Los Alamos National Laboratory
Box 1663, MS D446
Los Alamos, New Mexico 87545

H. D. Murphy
K. Thomas

1 Martin Marietta Energy Systems, Inc.
Tri County Mall
831 Tri County Boulevard
Oliver Springs, Tennessee 37840

R. Snipes

1 Oak Ridge National Laboratory
152 South Columbia Drive
Oak Ridge, Tennessee 37830

S. Garland

1 Oak Ridge National Laboratory
Bldg. 6026C
Oak Ridge, Tennessee 37831

E. Mulkey

3 Oak Ridge National Laboratory
Waste Research & Development Programs, MS: 6135
P.O. Box 2008
Oak Ridge, Tennessee 37831-6135

J. Berry
A. P. Malinauskas
C. P. McGinnis

DISTRIBUTION (cont.)

Number of copies

OFFSITE

1 Sandia National Laboratories
1515 Eubank S.E., Dept. 6620
Albuquerque, New Mexico 87123

D. L. Berry

1 Savannah River Site
Waste Environmental Remediation Programs
SRL, Bldg. 773A, Rm. A208
Aiken, South Carolina 29802

J. L. Steele

1 Westinghouse Environmental Management Company of Ohio
P.O. Box 398704
Cincinnati, OH 45239

D. Herman

2 Westinghouse Idaho Nuclear Company
Box 4000
Idaho Falls, ID 83403-5230

D. C. Machovec
D. Schmidt

3 Westinghouse Materials Company of Ohio
P.O. Box 398704, MS 51
Cincinnati, Ohio 45239

T. R. Clark
J. P. Hopper
D. Nixon

2 Westinghouse Savannah River Company
P.O. Box 616
Bldg. 773-41A, Rm. 228
Aiken, South Carolina 29802

B. D. Helton
J. L. Steele

DISTRIBUTION (cont.)

Number of copies		
ONSITE		
2	U. S. Department of Energy, Richland Field Office	
	C. S. Louie	A4-35
	D. E. Trader	A5-90
1	Kaiser Engineers Hanford	
	P. M. Heffner	E6-40
7	Pacific Northwest Laboratory	
	L. K. Holton	P7-43
	W. G. Richmond	P7-41
	M. J. Quadrel	K6-30
	P. A. Scott	P7-19
	S. C. Slate	K1-25
	E. J. Stenehjem	K6-59
	J. L. Straalsund	K1-79
25	Westinghouse Hanford Company	
	J. N. Appel	S4-58
	W. B. Barton	L4-75
	J. D. Berger	L0-18
	J. W. Cammann	H4-14
	S. A. Colby	L5-31
	J. M. Cruse	L5-63
	R. C. Eschenbaum	N1-45
	R. L. Gilchrist	L5-63
	C. E. Golberg	H5-49
	J. G. Hill	R2-12
	J. J. Holmes	L5-55
	F. R. La Barge	L5-63
	K. C. Neumayer	G6-57
	R. W. Powell	H4-14
	E. H. Smith	B2-19
	R. S. Weeks	H4-57
	G. R. Wilson	R2-31
	D. D. Wodrich	R2-23
	J. C. Womack	L0-18
	J. A. Yount	L5-63
	UST-ID Program File	L5-63
	Central Files	L8-04
	Document Processing and Distribution (2)	L8-15
	Information Release Administration	L8-07

This page intentionally left blank.