AR TARGET SHEET

The following document was too large to scan as one unit; therefore, it has been broken down into sections.

DOCUMENT#	BNFL-5193-RCRA-01
TITLE	River Protection Project Waste Treatment Plant Dangerous Waste Permit Application (5 volumes)
EDMC#	0053076
SECTION	10 of 11

Supplement 6

Supplement 6
Flowsheet Results for Envelope A/D at 60 t/d LAW

BNFL Inc.

Document title:	**Flowsheet Results for Envelope A/D at 60 t/d LAW Glass**
Contract deliverable number:	B-1-14
Department:	Technical and Engineering
Contract number:	DE-AC06-96RL13308
Author(s):	R Carter V B Ashley
Principal Author Signature	RCarter
Document Number:	RPT-W375-TE00019, Rev. 0
Checked by:	K D Boomer
Principal Checker Signature	
Date of issue:	31 March 2000
Issue status:	Approved
Approved by:	A Elsden
Approver's position:	Technical and Engineering Manager

Approver's signature

BNFL Inc.
River Protection Project – Waste Treatment Plant
3000 George Washington Way
Richland, WA 99352
United States of America
Tel: 509 371 3500
Fax: 509 371 3504

Circulation List

Purpose of issue: 1 For comment

2 For action
3 For information

Name	Location	No of copies	Remarks	Purpose of issue
S. Baker	R202, Risley	1		3
L. Bostic	P123, ETC1, Richland	1		3
G. Duncan	L121, Main, Richland	1		3
N. Gribble	R&T, Sellafield	1		3
J. Hammond	P127, ETC1, Richland	1		3
J. Isherwood	R218, ETC1, Richland	1		3
J. Isherwood	I166, Main, Richland	1		3
M. Johnson	B267, MPF, Richland	1		3
N. Lockwood	H118, Main, Richland	1		3
L. Lucas	Room 273, ETC2, Richland	1		3
D. Omichinski	H155, Main, Richland	1		3
M. Page	B223, MPF, Richland	1		3
I. Papp	N201, ETC1, Richland	1		3
C. Phillips	A114, MPF, Richland	1		3
J. Pope	L122, Main, Richland	1		3
R. Taylor	B229, Sellafield	1		3
R.Voke	I122, Main, Richland	1		3

BNFL Inc.

History Sheet

Rev	Date	Reason for revision	Revised by
A	6 March 2000	Draft for Review	R Carter, VB Ashley
0	31 March 2000	Issued Approved	R Carter, VB Ashley

Contents

Item — Page Number

1. Purpose 1
   1.1. Objective 1
   1.2. Design, Safety and Contract Requirements 1
2. Summary 2
3. Criteria and Design Inputs (Calculation Basis) 2
4. Assumptions 3
   4.1. Assumptions With Technical Justification 3
   4.2. Unverified Assumptions 3
5. Conclusions 3
6. Computer Printout Information 4

References 4

Appendix A SPEEDUP® Results for Envelope A/D at 60 t/d LAW Glass ..... A-i

Appendix B Flowsheet Diagrams ..... B-i

TABLE

Table 1. Mass and Activity Balances 2

Acronyms and Abbreviations

Cs IX	Cesium Ion Exchange
CV	column volumes
ETF	Effluent Treatment Facility
HLW	high level waste
ID	interface description
LAW	low activity waste
t/d	metric tons per day
PFDs	process flow diagrams
RPP	River Protection Project
Spec.	contract specification
TBq	terra bequerel
TDS	total dissolved solids
TOC	total organic carbon (modeled as $C_{10}H_{16}N_2O_8$)
TRU	transuranics (Am, Pu, Np)
WO	waste oxide
WTP	Waste Treatment Plant

1. Purpose

1.1. Objective

This document presents one of four mass and activity balance flowsheet model results for the River Protection Project - Waste Treatment Plant (RPP-WTP). The main objectives of the modeling results are to validate the overall facility process flowsheet and to provide stream condition information for design, safety and environmental/permitting efforts. The four mass and activity balances are shown in Table 1.

Results from each of the four cases are reported separately in the following reports:

	Case Description	Reference
1	A/D at 30 t/d LAW Glass	RPT-W375-TE00018 Rev.0
2	A/D at 60 t/d LAW Glass	RPT-W375-TE00019 Rev.0 (#)
3	B/D at 30 t/d LAW Glass	RPT-W375-TE00020 Rev.0
4	C/D at 30 t/d LAW Glass	RPT-W375-TE00021 Rev.0

Note: (#) This report

1.2. Design, Safety and Contract Requirements

The flowsheet conditions are a combination of physical and chemical properties, contract and regulatory requirements, design constraints, and assumptions.

From the River Protection Project (RPP) Contract (DOE-RL 1996), Design Studies and Documentation Deliverables address Process Design Products (Item No. B-1-14 of Table C4-2.1, Part B-1 Deliverables-CLIN 004), which includes Process Flow Diagrams (PFDs), and Material Balances.

The contract requires the Material Balance flowsheets to establish the treatment of the feed envelopes, based upon process testing information and the waste feed composition information. The level of detail in the material balance should be consistent with the level of detail required by the following contract specifications:

- Specification 1 – Immobilized HLW
- Specification 2 – Immobilized LAW
- Specification 3 - Entrained Solids
- Specification 7 – LAW Envelopes Definition
- Specification 8 – HLW Envelope Definition

Other information reported in the results include comparisons with the following:
Returned liquid effluents

- ID 5 – Non-radioactive, Non-Dangerous Liquid Effluents
- ID 6 – Radioactive, Dangerous Liquid Effluents
- BNFL Inc. 1999 - Dangerous Waste Components

Table 1. Mass and Activity Balances

LAW Feed (Envelope)	HLW Feed (Envelope)	LAW Feed Na Concentration (M)	LAW Glass Throughput (t/d)	HLW Feed Na Concentration (M)	HLW feed dry Solids Concentration (g/L)	HLW Glass Throughput (t/d)	Model Case		Limiting Component
A	A/D	3	30	3	30	1.5	SAFETY	Post LAW ultrafiltration	TRU (^{241}Am) Fissile material (^{239}Pu)
A	A/D	3	60	3	30	3.0	PRODUCTION		Throughput
							ENVIRONMENTAL		Pollutants Radionuclides TOC
B	B/D	5	30	5	200	1.5	SHIELDING	Pre Cs IX	^{137}Cs
C	C/D	3	30	3	30	1.5	SHIELDING	Post Cs IX	^{60}Co and ^{154}Eu
							SAFETY	Pre Sr/TRU removal	TRU (^{241}Am) Fissile material (^{239}Pu)
							ENVIRONMENTAL		TOC

2. Summary

Estimates of performance for maximum production are provided by the model results – low activity waste (LAW) glass and high level waste (HLW) glass products. More detailed stream information is reported below. The flowsheet model calculates that all contract specifications are met in this case, except for those detailed in the section 5.

3. Criteria and Design Inputs (Calculation Basis)

The performance of the RPP-WTP must be demonstrated under a variety of conditions. These include specific conditions for production, safety and environmental protection (Ashley and Carter 2000).

The case included in this report, LAW Envelope A (60 t/d glass) and HLW Envelopes A and D, provides estimates of performance for

- Maximum production (enhanced throughput)
- Providing estimates of performance for Environmental for Risk Assessment and Air Operating Permit (estimates maximum organics release under contracted throughput)

The LAW feed is 3M Na and 2 wt% entrained solids. The flowrate is calculated to produce 60 t/d LAW glass at 20 wt% Na_2O.

The HLW feed is 3M Na and 30 g/L solids. The flowrate is calculated to produce 3.0 t/d HLW glass at 30 wt% waste oxide (WO) incorporation.

4. Assumptions

4.1. Assumptions With Technical Justification

Assumptions are clearly stated in the Basis Document (Ashley and Carter 2000), with justifications that are substantiated by references to source documents, literature, development documents, calculations, and system descriptions.

4.2. Unverified Assumptions

Some assumptions are based on engineering judgements or modeling requirements. Some unverified assumptions need to be confirmed as the design progresses. The assumptions include action(s) required for verification and the date predicted for resolution. The process needs and uncertainties are identified and summarized in the Roadmap (Ashley 2000).

5. Conclusions

The waste oxides in the HLW glass are set in the model to 30 wt%, which is less than the contract minimum of 40 wt%. However, the contract only requires that one of the limits in Specification 1.2.2.1.6 be met. In this case, the limit of Al_2O_3+ZrO_2+Fe_2O_3 is calculated to be 25.0 wt% which is greater than 21 wt%.

In addition, all but the following contract specifications are met:

- **Specification 2.2.2.8** - The ^{90}Sr activity concentration of the LAW glass is 20.3 Ci/m^3 which is slightly greater than the maximum allowed value of 20 Ci/m^3. This is a consequence of the ^{90}Sr activity set at contract maximum (4.4x10^7 Bq/mol Na) in Envelope A supernatant.

- **Specification 2.2.2.8** - The ^{99}Tc activity concentration of the LAW glass is 0.23 Ci/m^3 which is slightly greater than the maximum allowed value of 0.1 Ci/m^3. Again, this is an artifact of the ^{99}Tc activity set at contract maximum (7.1x10^6 Bq/mol Na) in Envelope A supernatant.

Other information reported in the results indicate that the following criteria are not met::
Radioactive, Dangerous Liquid Effluent ID 6 - The TDS concentration in the liquid effluent to Effluent Treatment Plant (ETF) (stream 169) is 15234 ppmw, which exceeds the maximum agreed limit of <5000 ppmw.

- **Radioactive Air Emissions** - The LAW Vitrification stack discharge activity concentration limit for ^{99}Tc is exceeded. The calculated value of 2x10^{-8} Ci/m^3 is greater than the flowsheet limit of 2x10^{-9} Ci/m^3 based on DCGs. Again, this is due to the fact that ^{99}Tc activity is specified as contract maximum in Envelope A supernatant. The offgas is combined with other streams prior to discharge, which will reduce this concentration below the DCG.

Estimates of performance for maximum production and inputs to the Environmental Risk Assessment and Air Operating Permit are provided by the model results - LAW glass and HLW glass products, and effluent stream to ETF and treated offgas streams to stack respectively. More detailed stream information is reported below.

6. Computer Printout Information

The scientific computer program SPEEDUP® is used (Ashley 2000b). It is a Plant Modeling Simulation Tool suitable for process flowsheeting. The program has been verified and validated in accordance with project procedures (Santee 2000). See Appendix B for flowsheet figures.

The model calculates values for average mass flowrate in t/d, activity flowrate in TBq/d, volumetric flowrate in m^3/d and density in t/m^3. Only values of these parameters greater than 1.0 E-10 are reported (approaches numerical accuracy of the modeling system). Values less than 1.0 E-10 are considered to be equal to zero. Sources of design inputs are referenced in the Basis Document (Ashley and Carter 2000).

The results of modeling are included in Appendix A.

References

Ashley V. 2000a. *RPP-WTP Flowsheet Roadmap*, RPT-W375-TE00022, Revision A, BNFL Inc., Richland, Washington, USA.

Ashley V. 2000b. *RPP-WTP Modeling & Simulation Philosophy*, RPT-W375-TE00023, BNFL Inc., Richland, Washington, USA.

Ashley VB and Carter R. 2000. *RPP-WTP Mass and Activity Balance: Basis for Flowsheet Model*, RPT-W375-TE00017, Revision 0, BNFL Inc., Richland, Washington, USA.

BNFL Inc. 1996. *TWRS Privitization*, Contract No. DE-AC06-96RL13308, as revised, BNFL Inc., Richland, Washington, USA.

BNFL Inc. 1999. *Preliminary TWRS-P Facility Dangerous Waste Permit Application*, BNFL-5193-RCRA-01, Rev. 0C, May 1999. BNFL Inc., Richland, Washington, USA.

Santee G. 2000. *Software Validation for Speedup Version 5.5-6*, Draft for Review. BNFL Inc., Richland, Washington, USA.

Swanson L. 2000. *WTP Process Flowsheet Overview*, RPT-W375-TE00016. BNFL Inc., Richland, Washington, USA.

SPEEDUP®, Release 5.5-6. 1997. Aspen Technology, Inc.

Appendix A
SPEEDUP® Results for Envelope A/D at 60 t/d LAW Glass

Appendix A
SPEEDUP® Results for
Envelope A/D at 60 t/d LAW Glass

Appendix A contains results for Envelope A/D at 60 t/d LAW Glass. Following are the flowsheet results and their locations.

High-Level Waste (HLW) Process: Envelope D (LAW Envelope A, 60.0 t/d) A-1
Composition Summary of Envelope D, LAW Intermediates, Glass Additives and Glass A-5
STREAM 22 LAW Supernatant Feed A-6
STREAM 23 LAW Feed Transfer Line Water Flush A-7
STREAM 24 Recycle from Cesium Ion Exchange to LAW Feed Evaporator A-8
STREAM 7 Combined Feed to LAW Evaporator A-9
STREAM 9 LAW Feed Evaporator Overheads A-10
STREAM 5 Concentrated LAW Feed to Entrained Solids Removal Buffer Tank A-11
STREAM 12 LAW Permeate from Sr/TRU Precipitation to Ultra-filter A-12
STREAM 26 Solids from Ultrafiltration to Water Wash 1 ..... A-13
STREAM 27 Solids from LAW Water Wash to Entrained Solids Store A-14
STREAM 31 2.0M NaOH Feed to Adjustment for Return to DOE A-15
STREAM 32 0.5M NaNO2 Feed to Adjustment for Return to DOE A-16
STREAM 11 pH Adjusted Solids Product for Return to DOE A-17
STREAM 182 Solids from Pipeline Return Adjustment to Store A-18
STREAM 33 Water Feed to LAW Solids Water Wash A-19
STREAM 43 Combined Wash Liquor from Solids Water Washes to Sr/TRU Precipitn. A-20
STREAM 1 LAW Feed from Buffer Tank to Sr/TRU Precipitation A-21
STREAM 25 19M NaOH Reagent Feed to Sr/TRU Precipitation A-22
STREAM 78 1.0M NaMnO4 Reagent Feed to Sr/TRU Precipitation A-23
STREAM 79 1M Sr(NO3)2 Reagent Feed to Sr/TRU Precipitation A-24
STREAM 185 LAW Feed to Cs IX Dilution A-25
STREAM 181 Water Feed to Cs IX Dilution A-26
STREAM 161 Feed to Cesium Ion Exchange from Dilution A-27
STREAM 44 0.1M NaOH Cesium Ion Exchange Residual Feed Displacement A-28
STREAM 162 First H_2O Cesium IX Residual NaOH Displacement (Pre-Elution) A-29
STREAM 163 Second H_2O Cesium IX Residual Caustic Displacement (Pre-Elution) A-30
STREAM 45 Recycle to Feed from Cesium Ion Exchange A-31
STREAM 178 Cesium Ion Exchange 0.5M Regeneration Caustic A-32
STREAM 179 Regeneration Caustic Recycle for Cs IX Column Feed Displacement A-33
STREAM 184 Fresh 0.5M Caustic Makeup for Cs IX Column Feed Displacement A-34
STREAM 46 Eluate from Cesium Ion Exchange to Nitric Acid Recovery A-35
STREAM 172 Fresh SL-644 Ion Exchange Resin Feed to Cesium Ion Exchange A-36
STREAM 174 Spent SL-644 Ion Exchange Resin from Cesium Ion Exchange A-37
STREAM 47 Overheads from Cesium HNO_3 Recovery Evaporator A-38
STREAM 48 HNO_3 Recycle from Cesium HNO_3 Recovery Rectifying Column A-39
STREAM 49 Overheads from Cesium HNO_3 Recovery Rectifying Column A-40
STREAM 50 0.5M HNO_3 Cesium Ion Exchange Eluant Make-Up A-41
STREAM 51 0.5M HNO_3 Cesium Ion Exchange Elution A-42
STREAM 166 H_2O Cesium IX Residual HNO_3 Displacement (Post-Elution) A-43

STREAM 52 Fresh 5.0M HNO_3 Feed to Cesium HNO_3 Recovery Evaporator A-44
STREAM 17 Concentrated Cesium LAW Intermediate Product A-45
STREAM 168 Feed from Pretreatment Vessel Vents A-46
STREAM 226 Vessel Vents Scrubber Condensate to LAW Pretreatment A-47
STREAM 227 Vessel Vents Scrubber Offgas to Vessel Vents HEME A-48
STREAM 140 Vessel Vents HEME Condensate to LAW Pretreatment A-49
STREAM 139 Vessel Vents HEME Offgas to Vessel Vents VOC A-50
STREAM 6 Feed From Cesium Ion Exchange to Technetium Ion Exchange A-51
STREAM 71 0.25M NaOH Technetium Ion Exchange Residual Feed Displacement A-52
STREAM 164 Tc Ion Exchange Pre-Elution Rinse A-53
STREAM 165 Technetium IX Pre-Elution Rinse A-54
STREAM 62 Recycle to Feed from Technetium Ion Exchange A-55
STREAM 63 Eluate from Technetium Ion Exchange to Nitric Acid Recovery A-56
STREAM 173 Fresh SL-639 Ion Exchange Resin Feed to Technetium Ion Exchange A-57
STREAM 175 Spent SL-639 Ion Exchange Resin from Technetium Ion Exchange A-58
STREAM 157 Recovered resin from Cs and Tc Ion Exchange A-59
STREAM 64 Overheads from Technetium HNO_3 Recovery Evaporator A-60
STREAM 65 H_2O Recycle from Technetium HNO_3 Recovery Rectifying Column A-61
STREAM 66 Overheads from Technetium HNO_3 Recovery Rectifying Column A-62
STREAM 67 Technetium Ion Exchange Eluant Water Make-Up A-63
STREAM 68 Technetium Ion Exchange Eluant Demineralised Water A-64
STREAM 73 Regeneration Caustic Recycle for TcIX Column Feed Displacement A-65
STREAM 60 0.1M NaOH TcIX Residual Feed Displacement A-66
STREAM 61 0.25M NaOH Feed for pH adjustment of Tc IX Column A-67
STREAM 70 Concentrated Technetium LAW Intermediate Product A-68
STREAM 13 Feed from Tc Ion Exchange to LAW SBS Recycle Mixing Vessel A-69
STREAM 75 Feed to LAW Melter Feed Evaporator A-70
STREAM 74 Overheads from LAW Melter Feed Evaporator A-71
STREAM 80 Concentrate from LAW Melter Feed Evaporator A-72
STREAM 81 LAW Glass Formers Feed A-73
STREAM 76 LAW Melter Feed with Glass Formers A-74
STREAM 77 LAW Melter Sugar Addition A-75
STREAM 82 Feed to LAW Melter with Glass Formers and Sugar A-76
STREAM 83 Sparge and Film Cooler Air Feed to LAW Melter A-77
STREAM 84 LAW Glass Product A-78
STREAM 85 LAW Melter Offgas to LAW SBS A-79
STREAM 90 LAW WESP Condensate Recycle to SBS A-80
STREAM 87 Liquid Effluent from LAW SBS A-81
STREAM 88 LAW Melter Offgas from LAW SBS A-82
STREAM 89 LAW WESP Water Topup A-83
STREAM 102 LAW Vessel Vents A-84
STREAM 91 LAW SBS Neutralised Effluent Recycle A-85
STREAM 92 LAW WESP Offgas A-86
STREAM 94 Combined Feed to LAW HEPA A-87
STREAM 93 5M NaOH Feed to LAW Scrubber A-88
STREAM 97 Water Feed to LAW Scrubber A-89
STREAM 95 NH3 Feed to LAW Melter Offgas SCR A-90
STREAM 96 LAW Melter Offgas Feed to LAW Scrubber A-91
STREAM 98 LAW Melter Offgas from HEPA to VOC A-92
STREAM 99 LAW VOC Offgas to LAW Ammonia SCR A-93
STREAM 107 LAW VOC Spent Catalyst A-94

STREAM 176 Particulate Matter from HEPA Filter A-95
STREAM 104 Treated Combined LAW Offgas to Stack A-96
STREAM 142 Liquid Effluent from LAW Offgas Scrubber to Condensate Collection A-97
STREAM 169 Process Condensate to ETF A-98
STREAM 109 Sr/TRU LAW Product Feed to HLW Treatment A-99
STREAM 114 Combined Cesium/Technetium LAW Product Feed to HLW Treatment A-100
STREAM 186 19M NaOH Feed to Combined Cesium/Technetium LAW Product A-101
STREAM 187 Neutralised Cesium/Technetium LAW Product Feed to HLW Treatment ..A-102
STREAM 115 Combined Sr/TRU/Cs/Tc LAW Product Feed to HLW Treatment A-103
STREAM 18 HLW Feed (Envelope D) A-104
STREAM 170 HLW SBS Recycle to HLW Pretreatment A-105
STREAM 171 HLW Feed to Dewatering A-106
STREAM 200 Permeate from HLW Feed Dewatering to LAW Treatment A-107
STREAM 201 Concentrate from HLW Feed Dewatering to HLW Treatment A-108
STREAM 220 Water Feed to HLW Wash 1 ....A-109
STREAM 210 Water Wash 1 Permeate to LAW Pretreatment A-110
STREAM 202 Water Wash 1 Solids to Caustic Wash A-111
STREAM 207 HLW Feed Concentrate from Dewatering A-112
STREAM 20 Permeate from HLW Feed Ultrafiltration to LAW Treatment A-113
STREAM 145 Combined HLW Feed Concentrate & Intermediate LAW Process Products A-114
STREAM 116 HLW Glass Formers Feed A-115
STREAM 117 Blended HLW Melter Feed A-116
STREAM 130 HLW Melter Sugar Addition A-117
STREAM 118 Blended HLW Melter Feed with Sugar A-118
STREAM 119 Sparge and Film Cooler Air Feed to HLW Melter A-119
STREAM 143 HLW Glass Product A-120
STREAM 120 HLW Melter Offgas to HLW Melter Offgas SBS A-121
STREAM 121 WESP and HEME Condensate to HLW Melter Offgas SBS A-122
STREAM 122 HLW Melter Offgas from HLW Melter SBS to HLW WESP A-123
STREAM 129 5M NaOH Feed to HLW SBS Condensate A-124
STREAM 123 Liquid Effluent from HLW Melter Offgas SBS A-125
STREAM 124 Water Feed to HLW WESP A-126
STREAM 126 Liquid Effluent from HLW WESP A-127
STREAM 125 HLW Melter Offgas from HLW WESP to HLW HEME A-128
STREAM 127 HLW Vessel Vent Offgas A-129
STREAM 134 HLW Vessel Vent Offgas to HLW HEME A-130
STREAM 128 HLW HEME Condensate A-131
STREAM 131 Combined HLW Offgas to HLW HEPA Filters A-132
STREAM 177 HLW HEPA Solids A-133
STREAM 132 HLW HEPA Off-Gas to HLW Extract Fan Air Addition Gas A-134
STREAM 100 HLW Extract Fan Air A-135
STREAM 133 HLW Fan Mix Offgas to HLW Caustic Scrubber A-136
STREAM 144 5M NaOH Feed to HLW Offgas Caustic Scrubber A-137
STREAM 135 HLW Offgas Caustic Scrubber Bottoms A-138
STREAM 136 HLW Caustic Scrubber Offgas to HLW VOC A-139
STREAM 106 HLW VOC Spent Catalyst A-140
STREAM 105 HLW VOC Off-Gas to HLW Vitrification Stack Gas A-141

High-Level Waste (HLW) Process: Envelope D (LAW Envelope A, 60.0 t/d)

```
BASIS PER DAY
=============

LAW FEED  (Stream 22) CONTRACT SPECIFICATION 7
==============================================
Entrained solids            2.00 wt%     up to 2wt%,spec 7.2.2.1
Na Molarity                 3.00 M       3-10M,     spec 7.2.2.1
Na      mass                5.40 t/d
Total   mass               91.18 t/d
Volume  flow               78.27 m3/d
Cs137 act conc              0.36 Ci/L    <1.2Ci/L,  spec 7.2.2.4
                                         <3.0Ci/L   (for Env B from AZ-101/2)

HLW PERMEATE (Stream 20) CONTRACT SPECIFICATION 7
=================================================
Solids    conc          193.83E-6 wt%
Na Molarity                 2.11 M       2-5M,      spec 7.2.2.1
Cs137 act conc              0.27 Ci/L    <3.0Ci/L,  spec 7.2.2.4

HLW FEED (Stream 18) CONTRACT SPECIFICATION 8
=============================================
Solid   conc               30.00 g/L     10-200 g/L,spec 8.2.2.1
Na Molarity                 3.00 M       0.1-10M,   spec 7.2.2.1
Na      mass                3.65 t/d
Total   mass               58.86 t/d
Vol     flow               52.84 m3/d

ENTRAINED SOLIDS PRODUCT  (Stream 11) CONTRACT SPECIFICATION 3
==============================================================
Contract Spec  9.2.2.8:   Cs137 activity conc      Ci/L              0.29
                          Less than                Ci/L              6.00
Contract Spec  3.2.2.1:   Soluble Cs-137 content                     0.93 %
                          Less than                                 5.00 %
Contract Spec  3.2.2.2:   Soluble Tc-99  content                     0.60 %
                          Less than                                 5.00 %
Contract Spec  9.2.2.3:   Pu mass concentration g/USGal        302.7814E-6
                          Less than             g/USGal            0.0500
Contract Spec  3.2.2.5:   Na mass in liquid phase per
                             mass of dry solids    g/kg             60.00
                          Less than                g/kg             60.00
Contract Spec  3.2.2.3:   Volume percent solids                     20.00 %
                                          more than                 20.00 %
Contract Spec  9.2.2.6:                   less than                 30.00 %
Contract Spec  9.2.2.6:   pH                                        13.50
                                          more than                 11.00
Contract Spec  9.2.2.6:   Specific Gravity                           1.26
Contract Spec  9.2.2.6:   Particle density                           3.21 t/m3
Contract Spec  9.2.2.6:   Temperature                              295.53 K

DoE SPECIFICATION
CONCENTRATION (M)              OH            NO2          OH+NO2          NO3
                            =======       =======       =======       =======
Solids Product              0.3171        0.1710        0.4881        0.2183
DOE:
   NO3:        < 1.0          1.0 - 3.0          3.0 - 5.5
    OH      0.01  - 5.0     0.1*NO3 - 10         0.3 - 10
   NO2      0.011 - 5.5
NO2+OH                        > 0.4*NO3            > 1.2
N.B. For [NO3]>1.0M, no distinction is made between the addition of OH and NO2.
     NaOH has been added in preference, arbitrarily.

LAW GLASS PRODUCT  (Stream 84) CONTRACT SPECIFICATION 2
=======================================================
Total Mass                 60.0 t/d
Mass/canister              6000 kg  < 10,000 kg incl can mass, spec 2.2.2.4
Canisters/d               10.0 can/d
Na2O     mass               20.0 wt%    A>16wt%,B>6wt%,C>14wt%, spec 2.2.2.2
SiO2     mass               40.3 wt%    recommended > 40wt%
SO3      mass              0.078 wt%    < 0.2 wt%,   VSL

Contract Spec  2.2.2.8:   Radionuclide concentration  (Ci/m3)
                                             Cs137              0.3000
                                          Less than             3.0000
                                             Sr90              20.3256
                                          Less than            20.0000
                                             Tc99               0.2332
                                          Less than             0.1000
 Average Tc99 removed from combined LAW feed (Stream 7)        95.1648 %
                                          More than            80.0000 %

Department of Energy M435.1-1:
     TRU Activity per mass of glass          (nCi/g)            83.603
                                          Less than           100.0000
```

```
HLW GLASS PRODUCT  (Stream 143) CONTRACT SPECIFICATION 1
=========================================================
Total Mass                    3.0 t/d
Mass/canister                 3000 kg  < 4,200 kg incl can mass, spec 1.2.2.1.3
Canisters/d                  1.0 can/d
Oxide frac                    30.0 wt%    recommended 25-40 wt%
SiO2                          41.2 wt%    recommended > 40 wt%, VSL

Contract Spec  1.2.2.1.3: Maximum    1500 W / canister
Cs/Tc makeup to acheive            980.794 W / canister is      1.724E3 TBq/d
                                                   i.e.         0.012 t/d
Additional Cs137 required to make 1.500E3 W / canister is      3.939E3 TBq/d
                                     i.e. an additional   468.750E-6 t/d

LIQUID EFFLUENTS TO ETF (Stream 169) INTERFACE DESCRIPTION 5 AND 6
==================================================================
Total mass flow              214.937 t/d      ID 5 and ID 6
Total volume flow            165.852 L/min       ID 5 and ID 6
          less than          570.000 L/min       Non-Radioactive, ID5
          less than          190.000 L/min       Radioactive,     ID6

-------------------------------------------
CHEMICAL COMPONENTS OF LIQUID EFFLUENT ID 6
-------------------------------------------
pH                             12.423             0.5-13.0
TDS                         15.324E3 ppmw         < 5000 ppmw            WMH 1997
Total NO3                      1.898 wt%          < 40 wt% (dry basis)   WMH 1997
Total Cl                       0.551 wt%          <  2 wt% (dry basis)   WMH 1997
Total F                        0.073 wt%          <  2 wt% (dry basis)   WMH 1997
Total Organics              1.503E3 mg/L          < 1,210,000 mg/L,      WMH 1998
Ammonium  conc                25.996 mg/L         <   100,000 mg/L,      WMH 1998

--------------------------------------------------
RADIOACTIVE, DANGEROUS LIQUID EFFLUENT ID 6
--------------------------------------------------
Total activity                 0.004 TBq/d      ID 6
Am241    act conc                0.0 Ci/L         < 1.4E-09 Ci/L
C14      act conc                0.0 Ci/L         < 1.6E-06 Ci/L
Cm243/4  act conc                0.0 Ci/L         < 2.5E-08 Ci/L
Co60     act conc                0.0 Ci/L         < 2.4E-06 Ci/L
Cs137    act conc                0.0 Ci/L         < 9.9E-06 Ci/L
Eu154    act conc                0.0 Ci/L         < 9.8E-06 Ci/L
Eu155    act conc                0.0 Ci/L         < 6.3E-05 Ci/L
H3       act conc                0.0 Ci/L         < 2.4E-04 Ci/L
I129     act conc          300.483E-9 Ci/L         < 1.8E-06 Ci/L
Np237    act conc                0.0 Ci/L         < 2.1E-09 Ci/L
Pu238    act conc                0.0 Ci/L         < 2.8E-09 Ci/L
Pu239    act conc                0.0 Ci/L         < 1.7E-08 Ci/L
Pu240    act conc                0.0 Ci/L         < 1.7E-08 Ci/L
Pu241    act conc                0.0 Ci/L         < 2.6E-08 Ci/L
Sr90     act conc           17.030E-9 Ci/L         < 4.2E-05 Ci/L
Tc99     act conc           72.586E-9 Ci/L         < 1.8E-05 Ci/L
U233     act conc                0.0 Ci/L         < 2.1E-10 Ci/L
U235     act conc                0.0 Ci/L         < 2.1E-10 Ci/L

AIR EMISSIONS INTERFACE DESCRIPTION 22
======================================
*PRETREATMENT STACK*
Total Organics                 0.0 t/y        < 0.375 t/y, ID 22
-----------------------------
NON-RADIOACTIVE AIR EMISSIONS
-----------------------------
Pb  PSD                          0 t/y        <  0.6 t/y
F-  PSD                          0 t/y        <  3.0 t/y
NOx PSD                          0 t/y        < 40.0 t/y
SO2 PSD                          0 t/y        < 40.0 t/y
Total Solids PSD                 0 t/y        < 15.0 t/y
-----------------------------
RADIOACTIVE AIR EMISSIONS
-----------------------------
Total activity                   0 TBq/d
Am241    act conc                0 Ci/m3         < 2.4E-14 Ci/m3
C14      act conc                0 Ci/m3         < 5.0E-07 Ci/m3
Cm243/4  act conc                0 Ci/m3         < 7.0E-14 Ci/m3
Co60     act conc                0 Ci/m3         < 4.0E-10 Ci/m3
Cs137    act conc                0 Ci/m3         < 4.0E-10 Ci/m3
Eu154    act conc                0 Ci/m3         < 5.0E-11 Ci/m3
Eu155    act conc                0 Ci/m3         < 3.0E-10 Ci/m3
H3       act conc                0 Ci/m3         < 1.0E-07 Ci/m3
I129     act conc                0 Ci/m3         < 7.0E-11 Ci/m3
Np237    act conc                0 Ci/m3         < 2.0E-14 Ci/m3
Pu238    act conc                0 Ci/m3         < 3.0E-14 Ci/m3
Pu239    act conc                0 Ci/m3         < 2.0E-14 Ci/m3
Pu240    act conc                0 Ci/m3         < 2.0E-14 Ci/m3
Pu241    act conc                0 Ci/m3         < 1.0E-12 Ci/m3
Sb125    act conc                0 Ci/m3         < 6.0E-09 Ci/m3
```

```
Sr90     act conc                0 Ci/m3        < 9.0E-12 Ci/m3
Tc99     act conc                0 Ci/m3        < 2.0E-09 Ci/m3
U233     act conc                0 Ci/m3        < 4.0E-12 Ci/m3
U235     act conc                0 Ci/m3        < 5.0E-12 Ci/m3
OFP      act conc                0 Ci/m3        < 1.5E-10 Ci/m3

*LAW VITRIFICATION STACK*
Total Organics                   0 t/y       < 0.375 t/y, ID 22
-----------------------------
NON-RADIOACTIVE AIR EMISSIONS
-----------------------------
Pb  PSD                        0.0 t/y       <  0.6 t/y
F-  PSD                      0.005 t/y       <  3.0 t/y
NOx PSD                      2.237 t/y       < 40.0 t/y
SO2 PSD                      0.004 t/y       < 40.0 t/y
Total Solids PSD                 0 t/y       < 15.0 t/y
-----------------------------
RADIOACTIVE AIR EMISSIONS
-----------------------------
Total activity           222.625E-6 TBq/d
Am241    act conc               0.0 Ci/m3        < 2.4E-14 Ci/m3
C14      act conc               0.0 Ci/m3        < 5.0E-07 Ci/m3
Cm243/4  act conc               0.0 Ci/m3        < 7.0E-14 Ci/m3
Co60     act conc               0.0 Ci/m3        < 4.0E-10 Ci/m3
Cs137    act conc               0.0 Ci/m3        < 4.0E-10 Ci/m3
Eu154    act conc               0.0 Ci/m3        < 5.0E-11 Ci/m3
Eu155    act conc               0.0 Ci/m3        < 3.0E-10 Ci/m3
H3       act conc               0.0 Ci/m3        < 1.0E-07 Ci/m3
I129     act conc               0.0 Ci/m3        < 7.0E-11 Ci/m3
Np237    act conc               0.0 Ci/m3        < 2.0E-14 Ci/m3
Pu238    act conc               0.0 Ci/m3        < 3.0E-14 Ci/m3
Pu239    act conc               0.0 Ci/m3        < 2.0E-14 Ci/m3
Pu240    act conc               0.0 Ci/m3        < 2.0E-14 Ci/m3
Pu241    act conc               0.0 Ci/m3        < 1.0E-12 Ci/m3
Sb125    act conc               0.0 Ci/m3        < 6.0E-09 Ci/m3
Sr90     act conc               0.0 Ci/m3        < 9.0E-12 Ci/m3
Tc99     act conc          20.615E-9 Ci/m3        < 2.0E-09 Ci/m3
U233     act conc               0.0 Ci/m3        < 4.0E-12 Ci/m3
U235     act conc               0.0 Ci/m3        < 5.0E-12 Ci/m3
OFP      act conc               0.0 Ci/m3        < 1.5E-10 Ci/m3

*HLW VITRIFICATION STACK*
Total Organics                   0.0 t/y       < 0.375 t/y, ID 22
-----------------------------
NON-RADIOACTIVE AIR EMISSIONS
-----------------------------
Pb  PSD                        0.0 t/y       <  0.6 t/y
F-  PSD                        0.0 t/y       <  3.0 t/y
NOx PSD                      5.378 t/y       < 40.0 t/y
SO2 PSD                   1.010E-6 t/y       < 40.0 t/y
Total Solids PSD                 0 t/y       < 15.0 t/y
-----------------------------
RADIOACTIVE AIR EMISSIONS
-----------------------------
Total activity            8.640E-6 TBq/d
Am241    act conc               0.0 Ci/m3        < 2.4E-14 Ci/m3
C14      act conc                 0 Ci/m3        < 5.0E-07 Ci/m3
Cm243/4  act conc                 0 Ci/m3        < 7.0E-14 Ci/m3
Co60     act conc               0.0 Ci/m3        < 4.0E-10 Ci/m3
Cs137    act conc               0.0 Ci/m3        < 4.0E-10 Ci/m3
Eu154    act conc               0.0 Ci/m3        < 5.0E-11 Ci/m3
Eu155    act conc               0.0 Ci/m3        < 3.0E-10 Ci/m3
H3       act conc               0.0 Ci/m3        < 1.0E-07 Ci/m3
I129     act conc               0.0 Ci/m3        < 7.0E-11 Ci/m3
Np237    act conc               0.0 Ci/m3        < 2.0E-14 Ci/m3
Pu238    act conc               0.0 Ci/m3        < 3.0E-14 Ci/m3
Pu239    act conc               0.0 Ci/m3        < 2.0E-14 Ci/m3
Pu240    act conc               0.0 Ci/m3        < 2.0E-14 Ci/m3
Pu241    act conc               0.0 Ci/m3        < 1.0E-12 Ci/m3
Sb125    act conc               0.0 Ci/m3        < 6.0E-09 Ci/m3
Sr90     act conc               0.0 Ci/m3        < 9.0E-12 Ci/m3
Tc99     act conc               0.0 Ci/m3        < 2.0E-09 Ci/m3
U233     act conc               0.0 Ci/m3        < 4.0E-12 Ci/m3
U235     act conc               0.0 Ci/m3        < 5.0E-12 Ci/m3
OFP      act conc               0.0 Ci/m3        < 1.5E-10 Ci/m3

WITHIN FLOWSHEET
================
Feed Evaporator Molarity:     5.8 M
LAW Evaporator Molarity:     10.0 M

HLW Melter Feed Solids concentration after glass former addition (Stream 118)
Solid Conc                 395.0 g/L     (between 300-600 g/L)

ION EXCHANGE CYCLES:
====================
```

		Cs ion exchange	Tc ion exchange
Volume of Feed	m3/d:	77.5228	79.4155
Column Volume	m3:	1.0480	1.0480
Volume of Feed	CV/d:	73.9721	75.7781
CVs to load IX	CV/cycle:	100.0000	100.0000
CYCLES PER DAY:	MAXIMUM	0.7200	0.7200
	ACTUAL	0.7397	0.7555
Removal Efficiency	% :	99.9854	95.0000

VITRIFICATION RECYCLE STREAMS

	pH
LAW Vitrification	
SBS condensate (stream 91)	0.0691
Caustic Scrubber condensate (stream 142)	10.0000
HLW Vitrification	
SBS condensate (stream 170)	1.2219
Caustic Scrubber condensate (stream 135)	14.0000

Composition Summary of Envelope D, LAW Intermediates, Glass Additives and Glass

LAW ENVELOPE A AND HLW ENVELOPE D (3.00 t/d HLW Glass)

Total Envelope D (incl Na + Si) = 0.967 t/d (Oxide Equivalent)
Total Envelope D + LAW intermediates = 1.165 t/d (Oxide Equivalent)
Total WO (incl Na + Si) in HLW Glass = 2.960 t/d (Oxide Equivalent)

Compnt.	Env.D (dry basis)	LAW Inters. (as wt% of total D Oxides)	Env.D+ LAW Inters.	Additives (as wt% of glass)	HLW Glass (wt%)
Ag2O	0%	0%	0%	0%	0%
Al2O3	28.81%	0.20%	24.81%	0%	9.66%
As2O3	0%	0%	0%	0%	0%
B2O3	0%	0.0%	0.01%	9.06%	8.76%
BaO	0%	0.0%	0.0%	0%	0.0%
CaO	0.84%	0.01%	0.70%	0%	0.27%
CdO	0%	0.0%	0.0%	0%	0.0%
CeO2	0%	0%	0%	0%	0%
ClO3	0%	0.00%	0.16%	0%	0.04%
Cr2O3	0.31%	0.0%	0.28%	0%	0.11%
Cs2O	0.02%	0.24%	0.21%	0%	0.07%
CuO	0%	0%	0%	0%	0%
F	0%	0.0%	0.01%	0%	0.00%
Fe2O3	35.16%	0.00%	29.34%	0%	11.48%
K2O	1.10%	0.13%	1.57%	0%	0.59%
La2O3	1.10%	0.0%	0.91%	0%	0.36%
Li2O	0%	0.0%	0.00%	5.47%	5.41%
MgO	0%	0.0%	0.00%	0%	0.0%
MnO2	8.68%	0.55%	7.66%	0%	3.00%
Na2O	6.31%	7.99%	18.35%	4.04%	11.14%
NiO	1.82%	0.0%	1.51%	0%	0.59%
P2O5	0%	0.00%	0.02%	0%	0.0%
PbO	0.51%	0.0%	0.44%	0%	0.17%
SO3	0%	0.00%	0.02%	0%	0.0%
Sb2O5	0%	0%	0%	0%	0%
SeO2	0%	0%	0%	0%	0%
SiO2	0.48%	0.0%	0.42%	41.21%	41.24%
SrO	0.08%	1.46%	1.28%	0%	0.47%
TeO2	0%	0%	0%	0%	0%
TiO2	0%	0%	0%	0%	0%
UO3	3.08%	0.0%	2.56%	0%	1.00%
ZnO	0%	0.0%	0.01%	1.81%	1.80%
ZrO2	11.70%	0.0%	9.71%	0%	3.81%
TOTAL	100.00%	10.59%	100.00%	61.59%	100.00%

STREAM 22 LAW Supernatant Feed

MASS:	t/d
Al	0.666
Ba	0
Ca	332.374E-6
Cd	0
Cl	0.117
Cr	4.713E-3
F	23.377E-3
Fe	576.493E-6
Hg	0
K	0.774
La	0
Ni	443.814E-6
NO2	2.203
NO3	3.785
OH	1.517
Pb	2.282E-3
PO4	41.490E-3
SO4	35.652E-3
TIC	0.407
TOC	0.222
U	0
Na	5.401
H2O	73.824
Cs	1.262E-3
Sr	6.623E-6
Tc	130.243E-6
NH3	0.308
TRU	149.979E-6
Am	319.696E-9
Pu	22.464E-6
NO	0
Si	7.522E-3
B	0
SrCO3	0
MnO4-	0
Am(OH)3	0
O	0
O2	0
Mn	2.436E-3
Pu(OH)4	0
P2O5	0
SO2	0
CO2	0
I2	1.246E-3
N2	0
Co	341.026E-12
Eu	22.663E-9
Zn	4.945E-3
Mg	821.630E-6
Zr	991.478E-6
Li	0
NO2(g)	0
CsIX	0
TcIX	0
Sugar	0
Co(OH)3	0
SO4IX	0
H+	0
(TcO4)-	4.074E-3
B2O3 (s)	0
MnO2 (s)	12.364E-3
H2O (s)	0
ZnO (s)	109.415E-6
Li2O (s)	0
TOC (s)	0.444
Na2O (s)	0.976
K2O (s)	0.117
Al2O3(s)	0.155
CaO (s)	9.209E-3
Cr2O3(s)	13.403E-3
Fe2O3(s)	11.379E-3
NiO (s)	1.550E-3
MgO (s)	2.954E-3
SiO2 (s)	27.098E-3
ZrO2 (s)	2.699E-3
BaO (s)	164.122E-6
Anion(s)	11.379E-3
La2O3(s)	182.358E-6
PbO2 (s)	729.431E-6
UO3 (s)	36.818E-3

ACTIVITY:	TBq/d
Cs137	1.010E3
Sr90	10.331
Tc99	1.667
Am241	41.560E-3
Co60	14.323E-3
Eu154	0.141
Eu155	0.141
Pu238	6.739E-3
Pu239	47.665E-3
Pu240	13.337E-3
Pu241	0.538
H3	0
C14	0
I129	1.620E-3
OFP	7.749E-3
U233	420.301E-6
U235	9.134E-6
Cm243+4	0
Np237	3.311E-3
Sb125	0.220
Cs137 (s)	40.119
Sr90 (s)	31.548
Tc99 (s)	73.490E-3
Am241 (s)	52.154E-3
Co60 (s)	0
Eu154 (s)	0
Eu155 (s)	0
Pu238 (s)	8.443E-3
Pu239 (s)	41.395E-3
Pu240 (s)	11.543E-3
Pu241 (s)	0.465
H3 (s)	0
C14 (s)	0
I129 (s)	0
OFP (s)	0
U233 (s)	0
U235 (s)	19.330E-6
Cm243+4(s)	1.878E-3
Np237 (s)	0
Sb125 (s)	0
TOTAL	1.095E3
TRU (l)	0.113
TRU (s)	0.114
TOTAL Eu	0.282
TOTAL SOLIDS	72.321

TOTAL PRECIPITATE	0	t/d
TOTAL SOLIDS	1.824	t/d
TOTAL MASS	91.179	t/d
TOTAL VOLUME	78.268	m3/d
DENSITY	1.165	t/m3

STREAM 23 LAW Feed Transfer Line Water Flush

MASS:	t/d
Al	0
Ba	0
Ca	0
Cd	0
Cl	0
Cr	0
F	0
Fe	0
Hg	0
K	0
La	0
Ni	0
NO2	319.235E-6
NO3	0
OH	107.253E-6
Pb	0
PO4	0
SO4	0
TIC	0
TOC	0
U	0
Na	304.725E-6
H2O	0.629
Cs	0
Sr	0
Tc	0
NH3	0
TRU	0
Am	0
Pu	0
NO	0
Si	0
B	0
SrCO3	0
MnO4-	0
Am(OH)3	0
O	0
O2	0
Mn	0
Pu(OH)4	0
P2O5	0
SO2	0
CO2	0
I2	0
N2	0
Co	0
Eu	0
Zn	0
Mg	0
Zr	0
Li	0
NO2(g)	0
CsIX	0
TcIX	0
Sugar	0
Co(OH)3	0
SO4IX	0
H+	0
(TcO4)-	0
B2O3 (s)	0
MnO2 (s)	0
H2O (s)	0
ZnO (s)	0
Li2O (s)	0
TOC (s)	0
Na2O (s)	0
K2O (s)	0
Al2O3(s)	0
CaO (s)	0
Cr2O3(s)	0
Fe2O3(s)	0
NiO (s)	0
MgO (s)	0
SiO2 (s)	0
ZrO2 (s)	0
BaO (s)	0
Anion(s)	0
La2O3(s)	0
PbO2 (s)	0
UO3 (s)	0

ACTIVITY:	TBq/d
Cs137	0
Sr90	0
Tc99	0
Am241	0
Co60	0
Eu154	0
Eu155	0
Pu238	0
Pu239	0
Pu240	0
Pu241	0
H3	0
C14	0
I129	0
OFP	0
U233	0
U235	0
Cm243+4	0
Np237	0
Sb125	0
Cs137 (s)	0
Sr90 (s)	0
Tc99 (s)	0
Am241 (s)	0
Co60 (s)	0
Eu154 (s)	0
Eu155 (s)	0
Pu238 (s)	0
Pu239 (s)	0
Pu240 (s)	0
Pu241 (s)	0
H3 (s)	0
C14 (s)	0
I129 (s)	0
OFP (s)	0
U233 (s)	0
U235 (s)	0
Cm243+4(s)	0
Np237 (s)	0
Sb125 (s)	0
==========	
TOTAL	0
TRU (l)	0
TRU (s)	0
TOTAL Eu	0
TOTAL SOLIDS	0

TOTAL PRECIPITATE	0 t/d
TOTAL SOLIDS	0 t/d
TOTAL MASS	0.630 t/d
TOTAL VOLUME	0.631 m3/d
DENSITY	0.998 t/m3

STREAM 24 Recycle from Cesium Ion Exchange to LAW Feed Evaporator

MASS:	t/d
Al	0.0
Ba	0.0
Ca	0.0
Cd	0.0
Cl	0.0
Cr	0.0
F	0.0
Fe	0.0
Hg	0.0
K	149.919E-12
La	0.0
Ni	0.0
NO2	0.0
NO3	365.238E-6
OH	1.521E-3
Pb	0.0
PO4	0.0
SO4	0.0
TIC	0.0
TOC	0.0
U	0.0
Na	2.193E-3
H2O	6.111
Cs	31.350E-9
Sr	0.0
Tc	1.556E-9
NH3	0.0
TRU	0.0
Am	0.0
Pu	116.681E-12
NO	0.0
Si	0.0
B	0.0
SrCO3	0.0
MnO4-	0.0
Am(OH)3	0.0
O	0.0
O2	0.0
Mn	0.0
Pu(OH)4	0.0
P2O5	0.0
SO2	0.0
CO2	0.0
I2	0.0
N2	0.0
Co	0.0
Eu	0.0
Zn	0.0
Mg	0.0
Zr	0.0
Li	0.0
NO2(g)	0.0
CsIX	0.0
TcIX	0.0
Sugar	0.0
Co(OH)3	0.0
SO4IX	0.0
H+	589.547E-12
(TcO4)-	0.0
B2O3 (s)	0.0
MnO2 (s)	0.0
H2O (s)	0.0
ZnO (s)	0.0
Li2O (s)	0.0
TOC (s)	0.0
Na2O (s)	0.0
K2O (s)	0.0
Al2O3(s)	0.0
CaO (s)	0.0
Cr2O3(s)	0.0
Fe2O3(s)	0.0
NiO (s)	0.0
MgO (s)	0.0
SiO2 (s)	0.0
ZrO2 (s)	0.0
BaO (s)	0.0
Anion(s)	0.0
La2O3(s)	0.0
PbO2 (s)	0.0
UO3 (s)	0.0

ACTIVITY:	TBq/d
Cs137	99.576E-3
Sr90	99.341E-6
Tc99	998.198E-9
Am241	716.400E-9
Co60	0
Eu154	0
Eu155	0
Pu238	0
Pu239	228.850E-9
Pu240	49.650E-9
Pu241	0
H3	0
C14	0
I129	0
OFP	0
U233	0
U235	0
Cm243+4	0
Np237	0
Sb125	0
Cs137 (s)	0
Sr90 (s)	0
Tc99 (s)	0
Am241 (s)	0
Co60 (s)	0
Eu154 (s)	0
Eu155 (s)	0
Pu238 (s)	0
Pu239 (s)	0
Pu240 (s)	0
Pu241 (s)	0
H3 (s)	0
C14 (s)	0
I129 (s)	0
OFP (s)	0
U233 (s)	0
U235 (s)	0
Cm243+4(s)	0
Np237 (s)	0
Sb125 (s)	0
==========	
TOTAL	99.678E-3
TRU (l)	994.900E-9
TRU (s)	0
TOTAL Eu	0
TOTAL SOLIDS	0

TOTAL PRECIPITATE	0.0	t/d
TOTAL SOLIDS	236.667E-12	t/d
TOTAL MASS	6.115	t/d
TOTAL VOLUME	6.093	m3/d
DENSITY	1.004	t/m3

STREAM 7 Combined Feed to LAW Evaporator

	MASS: t/d
Al	1.112
Ba	59.588E-9
Ca	612.305E-6
Cd	83.301E-9
Cl	0.195
Cr	7.884E-3
F	39.041E-3
Fe	2.143E-3
Hg	0.0
K	1.292
La	64.680E-6
Ni	786.150E-6
NO2	3.687
NO3	6.353
OH	2.528
Pb	3.830E-3
PO4	69.517E-3
SO4	59.751E-3
TIC	0.679
TOC	0.370
U	122.677E-6
Na	9.025
H2O	151.803
Cs	2.177E-3
Sr	129.428E-6
Tc	217.928E-6
NH3	0.513
TRU	250.214E-6
Am	533.381E-9
Pu	37.482E-6
NO	0.0
Si	14.438E-3
B	2.748E-3
SrCO3	0.0
MnO4-	0.0
Am(OH)3	0.0
O	12.583E-3
O2	0.0
Mn	4.344E-3
Pu(OH)4	0.0
P2O5	558.710E-12
SO2	2.237E-9
CO2	0.0
I2	2.079E-3
N2	0.0
Co	580.148E-12
Eu	37.821E-9
Zn	8.676E-3
Mg	1.371E-3
Zr	1.930E-3
Li	739.398E-6
NO2(g)	2.615E-6
CsIX	0.0
TcIX	0.0
Sugar	0.0
Co(OH)3	0.0
SO4IX	0.0
H+	44.980E-9
(TcO4)-	10.114E-3
B2O3 (s)	0.0
MnO2 (s)	12.372E-3
H2O (s)	51.923E-6
ZnO (s)	109.415E-6
Li2O (s)	0.0
TOC (s)	0.444
Na2O (s)	0.976
K2O (s)	0.117
Al2O3(s)	0.155
CaO (s)	9.210E-3
Cr2O3(s)	13.404E-3
Fe2O3(s)	11.413E-3
NiO (s)	1.552E-3
MgO (s)	2.954E-3
SiO2 (s)	27.099E-3
ZrO2 (s)	2.710E-3
BaO (s)	164.122E-6
Anion(s)	11.385E-3
La2O3(s)	183.418E-6
PbO2 (s)	729.929E-6
UO3 (s)	36.821E-3

	ACTIVITY: TBq/d
Cs137	1.742E3
Sr90	17.237
Tc99	4.041
Am241	69.338E-3
Co60	23.895E-3
Eu154	0.235
Eu155	0.235
Pu238	11.243E-3
Pu239	79.522E-3
Pu240	22.250E-3
Pu241	0.897
H3	0
C14	0
I129	2.703E-3
OFP	12.927E-3
U233	701.201E-6
U235	15.238E-6
Cm243+4	0
Np237	5.523E-3
Sb125	0.368
Cs137 (s)	40.172
Sr90 (s)	31.905
Tc99 (s)	74.026E-3
Am241 (s)	55.368E-3
Co60 (s)	357.116E-6
Eu154 (s)	1.857E-3
Eu155 (s)	1.036E-3
Pu238 (s)	8.456E-3
Pu239 (s)	41.506E-3
Pu240 (s)	11.575E-3
Pu241 (s)	0.466
H3 (s)	2.321E-6
C14 (s)	232.125E-9
I129 (s)	10.356E-9
OFP (s)	22.498E-6
U233 (s)	32.140E-9
U235 (s)	19.339E-6
Cm243+4(s)	1.985E-3
Np237 (s)	2.643E-6
Sb125 (s)	1.143E-3
==========	==========
TOTAL	1.838E3
TRU (l)	0.188
TRU (s)	0.117
TOTAL Eu	0.473
TOTAL SOLIDS	72.740

TOTAL PRECIPITATE	0.0 t/d
TOTAL SOLIDS	1.824 t/d
TOTAL MASS	179.628 t/d
TOTAL VOLUME	161.413 m3/d
DENSITY	1.113 t/m3

STREAM 9 LAW Feed Evaporator Overheads

MASS:	t/d
Al	1.112E-6
Ba	0.0
Ca	619.742E-9
Cd	0.0
Cl	375.630E-6
Cr	226.192E-9
F	1.633E-6
Fe	2.150E-6
Hg	0.0
K	370.498E-6
La	0.0
Ni	788.516E-9
NO2	1.542E-3
NO3	11.166E-3
OH	2.536E-3
Pb	123.553E-6
PO4	69.726E-6
SO4	42.832E-6
TIC	681.294E-6
TOC	0.308
U	123.046E-9
Na	302.056E-6
H2O	94.879
Cs	0.0
Sr	565.049E-12
Tc	218.583E-9
NH3	513.433E-9
TRU	250.214E-12
Am	0.0
Pu	0.0
NO	0.0
Si	14.482E-6
B	2.756E-6
SrCO3	0.0
MnO4-	0.0
Am(OH)3	0.0
O	12.583E-9
O2	0.0
Mn	4.357E-6
Pu(OH)4	0.0
P2O5	0.0
SO2	0.0
CO2	0.0
I2	2.079E-9
N2	0.0
Co	0.0
Eu	0.0
Zn	8.702E-6
Mg	1.382E-6
Zr	1.930E-9
Li	739.398E-12
NO2(g)	0.0
CsIX	0.0
TcIX	0.0
Sugar	0.0
Co(OH)3	0.0
SO4IX	0.0
H+	0.0
(TcO4)-	10.114E-9
B2O3 (s)	0.0
MnO2 (s)	0.0
H2O (s)	0.0
ZnO (s)	0.0
Li2O (s)	0.0
TOC (s)	0
Na2O (s)	0
K2O (s)	0
Al2O3(s)	0
CaO (s)	0
Cr2O3(s)	0
Fe2O3(s)	0
NiO (s)	0
MgO (s)	0
SiO2 (s)	0
ZrO2 (s)	0
BaO (s)	0
Anion(s)	0
La2O3(s)	0
PbO2 (s)	0
UO3 (s)	0

ACTIVITY:	TBq/d
Cs137	18.931E-6
Sr90	75.324E-6
Tc99	142.749E-6
Am241	49.230E-9
Co60	23.967E-6
Eu154	235.041E-9
Eu155	235.041E-9
Pu238	3.036E-9
Pu239	21.471E-9
Pu240	6.008E-9
Pu241	242.208E-9
H3	0
C14	0
I129	2.703E-9
OFP	12.927E-9
U233	701.200E-12
U235	0.0
Cm243+4	0
Np237	5.523E-9
Sb125	367.837E-9
Cs137 (s)	0
Sr90 (s)	0
Tc99 (s)	0
Am241 (s)	0
Co60 (s)	0
Eu154 (s)	0
Eu155 (s)	0
Pu238 (s)	0
Pu239 (s)	0
Pu240 (s)	0
Pu241 (s)	0
H3 (s)	0
C14 (s)	0
I129 (s)	0
OFP (s)	0
U233 (s)	0
U235 (s)	0
Cm243+4(s)	0
Np237 (s)	0
Sb125 (s)	0
==========	
TOTAL	262.153E-6
TRU (l)	85.268E-9
TRU (s)	0
TOTAL Eu	470.081E-9
TOTAL SOLIDS	0

TOTAL PRECIPITATE	0.0 t/d
TOTAL SOLIDS	0.0 t/d
TOTAL MASS	95.205 t/d
TOTAL VOLUME	96.167 m3/d
DENSITY	0.990 t/m3

STREAM 5 Concentrated LAW Feed to Entrained Solids Removal Buffer Tank

MASS:	t/d
Al	1.112
Ba	59.528E-9
Ca	611.686E-6
Cd	83.217E-9
Cl	0.195
Cr	7.884E-3
F	39.040E-3
Fe	2.141E-3
Hg	0.0
K	1.292
La	64.680E-6
Ni	785.361E-6
NO2	3.685
NO3	6.342
OH	2.526
Pb	3.707E-3
PO4	69.447E-3
SO4	59.708E-3
TIC	0.679
TOC	61.640E-3
U	122.554E-6
Na	9.025
H2O	56.924
Cs	2.177E-3
Sr	129.428E-6
Tc	217.709E-6
NH3	0.513
TRU	250.214E-6
Am	533.380E-9
Pu	37.482E-6
NO	0.0
Si	14.424E-3
B	2.745E-3
SrCO3	0.0
MnO4-	0.0
Am(OH)3	0.0
O	12.583E-3
O2	0.0
Mn	4.339E-3
Pu(OH)4	0.0
P2O5	558.710E-12
SO2	2.237E-9
CO2	0.0
I2	2.079E-3
N2	0.0
Co	579.556E-12
Eu	37.821E-9
Zn	8.667E-3
Mg	1.369E-3
Zr	1.930E-3
Li	739.397E-6
NO2(g)	2.615E-6
CsIX	0.0
TcIX	0.0
Sugar	0.0
Co(OH)3	0.0
SO4IX	0.0
H+	44.980E-9
(TcO4)-	10.114E-3
B2O3 (s)	0.0
MnO2 (s)	12.372E-3
H2O (s)	51.923E-6
ZnO (s)	109.415E-6
Li2O (s)	0.0
TOC (s)	0.444
Na2O (s)	0.976
K2O (s)	0.117
Al2O3(s)	0.155
CaO (s)	9.210E-3
Cr2O3(s)	13.404E-3
Fe2O3(s)	11.413E-3
NiO (s)	1.552E-3
MgO (s)	2.954E-3
SiO2 (s)	27.099E-3
ZrO2 (s)	2.710E-3
BaO (s)	164.122E-6
Anion(s)	11.385E-3
La2O3(s)	183.418E-6
PbO2 (s)	729.929E-6
UO3 (s)	36.821E-3

ACTIVITY:	TBq/d
Cs137	1.742E3
Sr90	17.237
Tc99	4.040
Am241	69.338E-3
Co60	23.871E-3
Eu154	0.235
Eu155	0.235
Pu238	11.243E-3
Pu239	79.522E-3
Pu240	22.250E-3
Pu241	0.897
H3	0
C14	0
I129	2.703E-3
OFP	12.927E-3
U233	701.200E-6
U235	15.238E-6
Cm243+4	0
Np237	5.523E-3
Sb125	0.368
Cs137 (s)	40.172
Sr90 (s)	31.905
Tc99 (s)	74.026E-3
Am241 (s)	55.368E-3
Co60 (s)	357.116E-6
Eu154 (s)	1.857E-3
Eu155 (s)	1.036E-3
Pu238 (s)	8.456E-3
Pu239 (s)	41.506E-3
Pu240 (s)	11.575E-3
Pu241 (s)	0.466
H3 (s)	2.321E-6
C14 (s)	232.125E-9
I129 (s)	10.356E-9
OFP (s)	22.498E-6
U233 (s)	32.140E-9
U235 (s)	19.339E-6
Cm243+4(s)	1.985E-3
Np237 (s)	2.643E-6
Sb125 (s)	1.143E-3
==========	==========
TOTAL	1.838E3
TRU (l)	0.188
TRU (s)	0.117
TOTAL Eu	0.473
TOTAL SOLIDS	72.740

TOTAL PRECIPITATE	0.0 t/d
TOTAL SOLIDS	1.824 t/d
TOTAL MASS	84.423 t/d
TOTAL VOLUME	67.075 m3/d
DENSITY	1.259 t/m3

STREAM 12 LAW Permeate from Sr/TRU Precipitation to Ultra-filter

MASS:	t/d
Al	1.200
Ba	64.216E-9
Ca	659.859E-6
Cd	89.771E-9
Cl	0.210
Cr	8.505E-3
F	42.114E-3
Fe	2.310E-3
Hg	0.0
K	1.393
La	69.774E-6
Ni	847.213E-6
NO2	3.976
NO3	6.842
OH	2.725
Pb	3.998E-3
PO4	74.917E-3
SO4	64.410E-3
TIC	0.732
TOC	66.494E-3
U	132.206E-6
Na	9.735
H2O	73.974
Cs	2.348E-3
Sr	139.621E-6
Tc	234.855E-6
NH3	0.554
TRU	269.920E-6
Am	575.387E-9
Pu	40.434E-6
NO	0.0
Si	15.560E-3
B	2.961E-3
SrCO3	0.0
MnO4-	0.0
Am(OH)3	0.0
O	13.574E-3
O2	0.0
Mn	4.681E-3
Pu(OH)4	0.0
P2O5	602.716E-12
SO2	2.414E-9
CO2	0.0
I2	2.243E-3
N2	0.0
Co	625.204E-12
Eu	40.799E-9
Zn	9.350E-3
Mg	1.477E-3
Zr	2.082E-3
Li	797.629E-6
NO2(g)	2.821E-6
CsIX	0.0
TcIX	0.0
Sugar	0.0
Co(OH)3	0.0
SO4IX	0.0
H+	48.523E-9
(TcO4)-	10.911E-3
B2O3 (s)	0.0
MnO2 (s)	12.372E-3
H2O (s)	51.923E-6
ZnO (s)	109.415E-6
Li2O (s)	0.0
TOC (s)	0.444
Na2O (s)	0.976
K2O (s)	0.117
Al2O3(s)	0.155
CaO (s)	9.210E-3
Cr2O3(s)	13.404E-3
Fe2O3(s)	11.413E-3
NiO (s)	1.552E-3
MgO (s)	2.954E-3
SiO2 (s)	27.099E-3
ZrO2 (s)	2.710E-3
BaO (s)	164.122E-6
Anion(s)	11.385E-3
La2O3(s)	183.418E-6
PbO2 (s)	729.929E-6
UO3 (s)	36.821E-3

ACTIVITY:	TBq/d
Cs137	1.879E3
Sr90	18.594
Tc99	4.359
Am241	74.799E-3
Co60	25.752E-3
Eu154	0.254
Eu155	0.254
Pu238	12.128E-3
Pu239	85.785E-3
Pu240	24.003E-3
Pu241	0.968
H3	0.0
C14	0
I129	2.916E-3
OFP	13.945E-3
U233	756.424E-6
U235	16.438E-6
Cm243+4	0.0
Np237	5.958E-3
Sb125	0.397
Cs137 (s)	40.172
Sr90 (s)	31.905
Tc99 (s)	74.026E-3
Am241 (s)	55.368E-3
Co60 (s)	357.116E-6
Eu154 (s)	1.857E-3
Eu155 (s)	1.036E-3
Pu238 (s)	8.456E-3
Pu239 (s)	41.506E-3
Pu240 (s)	11.575E-3
Pu241 (s)	0.466
H3 (s)	2.321E-6
C14 (s)	232.125E-9
I129 (s)	5.180E-9
OFP (s)	22.498E-6
U233 (s)	16.076E-9
U235 (s)	19.339E-6
Cm243+4(s)	1.985E-3
Np237 (s)	2.643E-6
Sb125 (s)	1.143E-3
==========	
TOTAL	1.977E3
TRU (l)	0.203
TRU (s)	0.117
TOTAL Eu	0.510
TOTAL SOLIDS	72.740

TOTAL PRECIPITATE	0.0	t/d
TOTAL SOLIDS	1.824	t/d
TOTAL MASS	103.494	t/d
TOTAL VOLUME	84.657	m3/d
DENSITY	1.223	t/m3

STREAM 26 Solids from Ultrafiltration to Water Wash 1

	MASS: t/d
Al	0.101
Ba	5.410E-9
Ca	55.590E-6
Cd	7.563E-9
Cl	17.683E-3
Cr	716.513E-6
F	3.548E-3
Fe	194.600E-6
Hg	0.0
K	0.117
La	5.878E-6
Ni	71.374E-6
NO2	0.335
NO3	0.576
OH	0.230
Pb	336.854E-6
PO4	6.311E-3
SO4	5.426E-3
TIC	61.668E-3
TOC	5.602E-3
U	11.138E-6
Na	0.820
H2O	4.961
Cs	197.833E-6
Sr	11.762E-6
Tc	19.785E-6
NH3	46.661E-3
TRU	22.739E-6
Am	48.474E-9
Pu	3.406E-6
NO	0.0
Si	1.311E-3
B	249.446E-6
SrCO3	0.0
MnO4-	0.0
Am(OH)3	0.0
O	1.144E-3
O2	0.0
Mn	394.355E-6
Pu(OH)4	0.0
P2O5	0.0
SO2	203.340E-12
CO2	0.0
I2	188.953E-6
N2	0.0
Co	0.0
Eu	3.437E-9
Zn	787.699E-6
Mg	124.450E-6
Zr	175.435E-6
Li	67.196E-6
NO2(g)	237.656E-9
CsIX	0.0
TcIX	0.0
Sugar	0.0
Co(OH)3	0.0
SO4IX	0.0
H+	4.088E-9
(TcO4)-	919.198E-6
B2O3 (s)	0.0
MnO2 (s)	12.372E-3
H2O (s)	51.923E-6
ZnO (s)	109.415E-6
Li2O (s)	0.0
TOC (s)	0.444
Na2O (s)	0.976
K2O (s)	0.117
Al2O3(s)	0.155
CaO (s)	9.210E-3
Cr2O3(s)	13.404E-3
Fe2O3(s)	11.413E-3
NiO (s)	1.552E-3
MgO (s)	2.954E-3
SiO2 (s)	27.099E-3
ZrO2 (s)	2.710E-3
BaO (s)	164.122E-6
Anion(s)	11.385E-3
La2O3(s)	183.418E-6
PbO2 (s)	729.928E-6
UO3 (s)	36.821E-3

	ACTIVITY: TBq/d
Cs137	158.280
Sr90	1.566
Tc99	0.367
Am241	6.301E-3
Co60	2.169E-3
Eu154	21.361E-3
Eu155	21.361E-3
Pu238	1.022E-3
Pu239	7.227E-3
Pu240	2.022E-3
Pu241	81.525E-3
H3	0.0
C14	0
I129	245.639E-6
OFP	1.175E-3
U233	63.725E-6
U235	1.385E-6
Cm243+4	0.0
Np237	501.969E-6
Sb125	33.429E-3
Cs137 (s)	40.172
Sr90 (s)	31.905
Tc99 (s)	74.026E-3
Am241 (s)	55.368E-3
Co60 (s)	357.115E-6
Eu154 (s)	1.857E-3
Eu155 (s)	1.036E-3
Pu238 (s)	8.456E-3
Pu239 (s)	41.506E-3
Pu240 (s)	11.575E-3
Pu241 (s)	0.466
H3 (s)	2.321E-6
C14 (s)	232.125E-9
I129 (s)	5.180E-9
OFP (s)	22.498E-6
U233 (s)	16.076E-9
U235 (s)	19.339E-6
Cm243+4(s)	1.985E-3
Np237 (s)	2.643E-6
Sb125 (s)	1.143E-3
==========	==========
TOTAL	233.132
TRU (l)	17.074E-3
TRU (s)	0.117
TOTAL Eu	45.614E-3
TOTAL SOLIDS	72.740

TOTAL PRECIPITATE	0.0 t/d
TOTAL SOLIDS	1.824 t/d
TOTAL MASS	9.118 t/d
TOTAL VOLUME	7.132 m3/d
DENSITY	1.279 t/m3

STREAM 27 Solids from LAW Water Wash to Entrained Solids Store

	MASS: t/d
Al	13.483E-3
Ba	721.753E-12
Ca	7.416E-6
Cd	1.009E-9
Cl	2.359E-3
Cr	95.593E-6
F	473.343E-6
Fe	25.962E-6
Hg	0.0
K	15.660E-3
La	784.221E-9
Ni	9.522E-6
NO2	44.685E-3
NO3	76.897E-3
OH	30.623E-3
Pb	44.941E-6
PO4	842.029E-6
SO4	723.937E-6
TIC	8.227E-3
TOC	747.362E-6
U	1.486E-6
Na	0.109
H2O	6.983
Cs	26.394E-6
Sr	1.569E-6
Tc	2.640E-6
NH3	6.225E-3
TRU	3.034E-6
Am	6.467E-9
Pu	454.458E-9
NO	0.0
Si	174.884E-6
B	33.280E-6
SrCO3	0.0
MnO4-	0.0
Am(OH)3	0.0
O	152.560E-6
O2	0.0
Mn	52.613E-6
Pu(OH)4	0.0
P2O5	0.0
SO2	0.0
CO2	0.0
I2	25.209E-6
N2	0.0
Co	0.0
Eu	458.560E-12
Zn	105.090E-6
Mg	16.603E-6
Zr	23.406E-6
Li	8.965E-6
NO2(g)	31.707E-9
CsIX	0.0
TcIX	0.0
Sugar	0.0
Co(OH)3	0.0
SO4IX	0.0
H+	545.366E-12
(TcO4)-	122.634E-6
B2O3 (s)	0.0
MnO2 (s)	12.372E-3
H2O (s)	51.923E-6
ZnO (s)	109.415E-6
Li2O (s)	0.0
TOC (s)	0.444
Na2O (s)	0.976
K2O (s)	0.117
Al2O3(s)	0.155
CaO (s)	9.210E-3
Cr2O3(s)	13.404E-3
Fe2O3(s)	11.413E-3
NiO (s)	1.552E-3
MgO (s)	2.954E-3
SiO2 (s)	27.099E-3
ZrO2 (s)	2.710E-3
BaO (s)	164.122E-6
Anion(s)	11.385E-3
La2O3(s)	183.418E-6
PbO2 (s)	729.928E-6
UO3 (s)	36.821E-3

	ACTIVITY: TBq/d
Cs137	21.117
Sr90	0.209
Tc99	48.989E-3
Am241	840.703E-6
Co60	289.240E-6
Eu154	2.850E-3
Eu155	2.850E-3
Pu238	136.314E-6
Pu239	964.180E-6
Pu240	269.780E-6
Pu241	10.877E-3
H3	0.0
C14	0
I129	32.772E-6
OFP	156.736E-6
U233	8.502E-6
U235	184.759E-9
Cm243+4	0.0
Np237	66.969E-6
Sb125	4.460E-3
Cs137 (s)	40.172
Sr90 (s)	31.905
Tc99 (s)	74.026E-3
Am241 (s)	55.368E-3
Co60 (s)	357.115E-6
Eu154 (s)	1.857E-3
Eu155 (s)	1.036E-3
Pu238 (s)	8.456E-3
Pu239 (s)	41.506E-3
Pu240 (s)	11.575E-3
Pu241 (s)	0.466
H3 (s)	2.321E-6
C14 (s)	232.125E-9
I129 (s)	5.180E-9
OFP (s)	22.498E-6
U233 (s)	16.076E-9
U235 (s)	19.339E-6
Cm243+4(s)	1.985E-3
Np237 (s)	2.643E-6
Sb125 (s)	1.143E-3
==========	
TOTAL	94.139
TRU (l)	2.278E-3
TRU (s)	0.117
TOTAL Eu	8.592E-3
TOTAL SOLIDS	72.740

TOTAL PRECIPITATE	0.0 t/d
TOTAL SOLIDS	1.824 t/d
TOTAL MASS	9.118 t/d
TOTAL VOLUME	8.213 m3/d
DENSITY	1.110 t/m3

STREAM 31 2.0M NaOH Feed to Adjustment for Return to DOE

MASS:	t/d
Al	0
Ba	0
Ca	0
Cd	0
Cl	0
Cr	0
F	0
Fe	0
Hg	0
K	0
La	0
Ni	0
NO2	0
NO3	0
OH	0
Pb	0
PO4	0
SO4	0
TIC	0
TOC	0
U	0
Na	0
H2O	0
Cs	0
Sr	0
Tc	0
NH3	0
TRU	0
Am	0
Pu	0
NO	0
Si	0
B	0
SrCO3	0
MnO4-	0
Am(OH)3	0
O	0
O2	0
Mn	0
Pu(OH)4	0
P2O5	0
SO2	0
CO2	0
I2	0
N2	0
Co	0
Eu	0
Zn	0
Mg	0
Zr	0
Li	0
NO2(g)	0
CsIX	0
TcIX	0
Sugar	0
Co(OH)3	0
SO4IX	0
H+	0
(TcO4)-	0
B2O3 (s)	0
MnO2 (s)	0
H2O (s)	0
ZnO (s)	0
Li2O (s)	0
TOC (s)	0
Na2O (s)	0
K2O (s)	0
Al2O3(s)	0
CaO (s)	0
Cr2O3(s)	0
Fe2O3(s)	0
NiO (s)	0
MgO (s)	0
SiO2 (s)	0
ZrO2 (s)	0
BaO (s)	0
Anion(s)	0
La2O3(s)	0
PbO2 (s)	0
UO3 (s)	0

ACTIVITY:	TBq/d
Cs137	0
Sr90	0
Tc99	0
Am241	0
Co60	0
Eu154	0
Eu155	0
Pu238	0
Pu239	0
Pu240	0
Pu241	0
H3	0
C14	0
I129	0
OFP	0
U233	0
U235	0
Cm243+4	0
Np237	0
Sb125	0
Cs137 (s)	0
Sr90 (s)	0
Tc99 (s)	0
Am241 (s)	0
Co60 (s)	0
Eu154 (s)	0
Eu155 (s)	0
Pu238 (s)	0
Pu239 (s)	0
Pu240 (s)	0
Pu241 (s)	0
H3 (s)	0
C14 (s)	0
I129 (s)	0
OFP (s)	0
U233 (s)	0
U235 (s)	0
Cm243+4(s)	0
Np237 (s)	0
Sb125 (s)	0
==========	
TOTAL	0
TRU (l)	0
TRU (s)	0
TOTAL Eu	0
TOTAL SOLIDS	0

TOTAL PRECIPITATE	0 t/d
TOTAL SOLIDS	0 t/d
TOTAL MASS	0 t/d
TOTAL VOLUME	0 m3/d
DENSITY	1.021 t/m3

STREAM 32 0.5M NaNO2 Feed to Adjustment for Return to DOE

MASS:	t/d
Al	0
Ba	0
Ca	0
Cd	0
Cl	0
Cr	0
F	0
Fe	0
Hg	0
K	0
La	0
Ni	0
NO2	0
NO3	0
OH	0
Pb	0
PO4	0
SO4	0
TIC	0
TOC	0
U	0
Na	0
H2O	0
Cs	0
Sr	0
Tc	0
NH3	0
TRU	0
Am	0
Pu	0
NO	0
Si	0
B	0
SrCO3	0
MnO4-	0
Am(OH)3	0
O	0
O2	0
Mn	0
Pu(OH)4	0
P2O5	0
SO2	0
CO2	0
I2	0
N2	0
Co	0
Eu	0
Zn	0
Mg	0
Zr	0
Li	0
NO2(g)	0
CsIX	0
TcIX	0
Sugar	0
Co(OH)3	0
SO4IX	0
H+	0
(TcO4)-	0
B2O3 (s)	0
MnO2 (s)	0
H2O (s)	0
ZnO (s)	0
Li2O (s)	0
TOC (s)	0
Na2O (s)	0
K2O (s)	0
Al2O3(s)	0
CaO (s)	0
Cr2O3(s)	0
Fe2O3(s)	0
NiO (s)	0
MgO (s)	0
SiO2 (s)	0
ZrO2 (s)	0
BaO (s)	0
Anion(s)	0
La2O3(s)	0
PbO2 (s)	0
UO3 (s)	0

ACTIVITY:	TBq/d
Cs137	0
Sr90	0
Tc99	0
Am241	0
Co60	0
Eu154	0
Eu155	0
Pu238	0
Pu239	0
Pu240	0
Pu241	0
H3	0
C14	0
I129	0
OFP	0
U233	0
U235	0
Cm243+4	0
Np237	0
Sb125	0
Cs137 (s)	0
Sr90 (s)	0
Tc99 (s)	0
Am241 (s)	0
Co60 (s)	0
Eu154 (s)	0
Eu155 (s)	0
Pu238 (s)	0
Pu239 (s)	0
Pu240 (s)	0
Pu241 (s)	0
H3 (s)	0
C14 (s)	0
I129 (s)	0
OFP (s)	0
U233 (s)	0
U235 (s)	0
Cm243+4(s)	0
Np237 (s)	0
Sb125 (s)	0
==========	
TOTAL	0
TRU (l)	0
TRU (s)	0
TOTAL Eu	0
TOTAL SOLIDS	0

TOTAL PRECIPITATE	0 t/d
TOTAL SOLIDS	0 t/d
TOTAL MASS	0 t/d
TOTAL VOLUME	0 m3/d
DENSITY	1.019 t/m3

STREAM 11 pH Adjusted Solids Product for Return to DOE

	MASS: t/d
Al	13.483E-3
Ba	721.753E-12
Ca	7.416E-6
Cd	1.009E-9
Cl	2.359E-3
Cr	95.593E-6
F	473.343E-6
Fe	25.962E-6
Hg	0.0
K	15.660E-3
La	784.221E-9
Ni	9.522E-6
NO2	44.685E-3
NO3	76.897E-3
OH	30.623E-3
Pb	44.941E-6
PO4	842.029E-6
SO4	723.937E-6
TIC	8.227E-3
TOC	747.362E-6
U	1.486E-6
Na	0.109
H2O	6.983
Cs	26.394E-6
Sr	1.569E-6
Tc	2.640E-6
NH3	6.225E-3
TRU	3.034E-6
Am	6.467E-9
Pu	454.458E-9
NO	0.0
Si	174.884E-6
B	33.280E-6
SrCO3	0.0
MnO4-	0.0
Am(OH)3	0.0
O	152.560E-6
O2	0.0
Mn	52.613E-6
Pu(OH)4	0.0
P2O5	0.0
SO2	0.0
CO2	0.0
I2	25.209E-6
N2	0.0
Co	0.0
Eu	458.560E-12
Zn	105.090E-6
Mg	16.603E-6
Zr	23.406E-6
Li	8.965E-6
NO2(g)	31.707E-9
CsIX	0.0
TcIX	0.0
Sugar	0.0
Co(OH)3	0.0
SO4IX	0.0
H+	0.0
(TcO4)-	122.634E-6
B2O3 (s)	0.0
MnO2 (s)	12.372E-3
H2O (s)	51.923E-6
ZnO (s)	109.415E-6
Li2O (s)	0.0
TOC (s)	0.444
Na2O (s)	0.976
K2O (s)	0.117
Al2O3(s)	0.155
CaO (s)	9.210E-3
Cr2O3(s)	13.404E-3
Fe2O3(s)	11.413E-3
NiO (s)	1.552E-3
MgO (s)	2.954E-3
SiO2 (s)	27.099E-3
ZrO2 (s)	2.710E-3
BaO (s)	164.122E-6
Anion(s)	11.385E-3
La2O3(s)	183.418E-6
PbO2 (s)	729.928E-6
UO3 (s)	36.821E-3

	ACTIVITY: TBq/d
Cs137	21.117
Sr90	0.209
Tc99	48.989E-3
Am241	840.703E-6
Co60	289.240E-6
Eu154	2.850E-3
Eu155	2.850E-3
Pu238	136.314E-6
Pu239	964.180E-6
Pu240	269.780E-6
Pu241	10.877E-3
H3	0.0
C14	0
I129	32.772E-6
OFP	156.736E-6
U233	8.502E-6
U235	184.759E-9
Cm243+4	0.0
Np237	66.969E-6
Sb125	4.460E-3
Cs137 (s)	40.172
Sr90 (s)	31.905
Tc99 (s)	74.026E-3
Am241 (s)	55.368E-3
Co60 (s)	357.115E-6
Eu154 (s)	1.857E-3
Eu155 (s)	1.036E-3
Pu238 (s)	8.456E-3
Pu239 (s)	41.506E-3
Pu240 (s)	11.575E-3
Pu241 (s)	0.466
H3 (s)	2.321E-6
C14 (s)	232.125E-9
I129 (s)	5.180E-9
OFP (s)	22.498E-6
U233 (s)	16.076E-9
U235 (s)	19.339E-6
Cm243+4(s)	1.985E-3
Np237 (s)	2.643E-6
Sb125 (s)	1.143E-3
TOTAL	94.139
TRU (1)	2.278E-3
TRU (s)	0.117
TOTAL Eu	8.592E-3
TOTAL SOLIDS	72.740

TOTAL PRECIPITATE	0.0 t/d
TOTAL SOLIDS	1.824 t/d
TOTAL MASS	9.118 t/d
TOTAL VOLUME	7.637 m3/d
DENSITY	1.194 t/m3

STREAM 182 Solids from Pipeline Return Adjustment to Store

	MASS: t/d
Al	13.483E-3
Ba	721.753E-12
Ca	7.416E-6
Cd	1.009E-9
Cl	2.359E-3
Cr	95.593E-6
F	473.343E-6
Fe	25.962E-6
Hg	0.0
K	15.660E-3
La	784.221E-9
Ni	9.522E-6
NO2	44.685E-3
NO3	76.897E-3
OH	30.623E-3
Pb	44.941E-6
PO4	842.029E-6
SO4	723.937E-6
TIC	8.227E-3
TOC	747.362E-6
U	1.486E-6
Na	0.109
H2O	5.012
Cs	26.394E-6
Sr	1.569E-6
Tc	2.640E-6
NH3	6.225E-3
TRU	3.034E-6
Am	6.467E-9
Pu	454.458E-9
NO	0.0
Si	174.884E-6
B	33.280E-6
SrCO3	0.0
MnO4-	0.0
Am(OH)3	0.0
O	152.560E-6
O2	0.0
Mn	52.613E-6
Pu(OH)4	0.0
P2O5	0.0
SO2	0.0
CO2	0.0
I2	25.209E-6
N2	0.0
Co	0.0
Eu	458.560E-12
Zn	105.090E-6
Mg	16.603E-6
Zr	-23.406E-6
Li	8.965E-6
NO2(g)	31.707E-9
CsIX	0.0
TcIX	0.0
Sugar	0.0
Co(OH)3	0.0
SO4IX	0.0
H+	0.0
(TcO4)-	122.634E-6
B2O3 (s)	0.0
MnO2 (s)	12.372E-3
H2O (s)	51.923E-6
ZnO (s)	109.415E-6
Li2O (s)	0.0
TOC (s)	0.444
Na2O (s)	0.976
K2O (s)	0.117
Al2O3(s)	0.155
CaO (s)	9.210E-3
Cr2O3(s)	13.404E-3
Fe2O3(s)	11.413E-3
NiO (s)	1.552E-3
MgO (s)	2.954E-3
SiO2 (s)	27.099E-3
ZrO2 (s)	2.710E-3
BaO (s)	164.122E-6
Anion(s)	11.385E-3
La2O3(s)	183.418E-6
PbO2 (s)	729.928E-6
UO3 (s)	36.821E-3

	ACTIVITY: TBq/d
Cs137	21.117
Sr90	0.209
Tc99	48.989E-3
Am241	840.703E-6
Co60	289.240E-6
Eu154	2.850E-3
Eu155	2.850E-3
Pu238	136.314E-6
Pu239	964.180E-6
Pu240	269.780E-6
Pu241	10.877E-3
H3	0.0
C14	0
I129	32.772E-6
OFP	156.736E-6
U233	8.502E-6
U235	184.759E-9
Cm243+4	0.0
Np237	66.969E-6
Sb125	4.460E-3
Cs137 (s)	40.172
Sr90 (s)	31.905
Tc99 (s)	74.026E-3
Am241 (s)	55.368E-3
Co60 (s)	357.115E-6
Eu154 (s)	1.857E-3
Eu155 (s)	1.036E-3
Pu238 (s)	8.456E-3
Pu239 (s)	41.506E-3
Pu240 (s)	11.575E-3
Pu241 (s)	0.466
H3 (s)	1.666E-6
C14 (s)	232.125E-9
I129 (s)	5.180E-9
OFP (s)	22.498E-6
U233 (s)	16.076E-9
U235 (s)	19.339E-6
Cm243+4(s)	1.985E-3
Np237 (s)	2.643E-6
Sb125 (s)	1.143E-3
TOTAL	94.139
TRU (1)	2.278E-3
TRU (s)	0.117
TOTAL Eu	8.592E-3
TOTAL SOLIDS	72.740

TOTAL PRECIPITATE	0.0 t/d
TOTAL SOLIDS	1.824 t/d
TOTAL MASS	7.147 t/d
TOTAL VOLUME	5.681 m3/d
DENSITY	1.258 t/m3

STREAM 33 Water Feed to LAW Solids Water Wash

MASS:	t/d
Al	0
Ba	0
Ca	0
Cd	0
Cl	0
Cr	0
F	0
Fe	0
Hg	0
K	0
La	0
Ni	0
NO2	0
NO3	0
OH	0
Pb	0
PO4	0
SO4	0
TIC	0
TOC	0
U	0
Na	0
H2O	19.072
Cs	0
Sr	0
Tc	0
NH3	0
TRU	0
Am	0
Pu	0
NO	0
Si	0
B	0
SrCO3	0
MnO4-	0
Am(OH)3	0
O	0
O2	0
Mn	0
Pu(OH)4	0
P2O5	0
SO2	0
CO2	0
I2	0
N2	0
Co	0
Eu	0
Zn	0
Mg	0
Zr	0
Li	0
NO2(g)	0
CsIX	0
TcIX	0
Sugar	0
Co(OH)3	0
SO4IX	0
H+	0
(TcO4)-	0
B2O3 (s)	0
MnO2 (s)	0
H2O (s)	0
ZnO (s)	0
Li2O (s)	0
TOC (s)	0
Na2O (s)	0
K2O (s)	0
Al2O3(s)	0
CaO (s)	0
Cr2O3(s)	0
Fe2O3(s)	0
NiO (s)	0
MgO (s)	0
SiO2 (s)	0
ZrO2 (s)	0
BaO (s)	0
Anion(s)	0
La2O3(s)	0
PbO2 (s)	0
UO3 (s)	0

ACTIVITY:	TBq/d
Cs137	0
Sr90	0
Tc99	0
Am241	0
Co60	0
Eu154	0
Eu155	0
Pu238	0
Pu239	0
Pu240	0
Pu241	0
H3	0
C14	0
I129	0
OFP	0
U233	0
U235	0
Cm243+4	0
Np237	0
Sb125	0
Cs137 (s)	0
Sr90 (s)	0
Tc99 (s)	0
Am241 (s)	0
Co60 (s)	0
Eu154 (s)	0
Eu155 (s)	0
Pu238 (s)	0
Pu239 (s)	0
Pu240 (s)	0
Pu241 (s)	0
H3 (s)	0
C14 (s)	0
I129 (s)	0
OFP (s)	0
U233 (s)	0
U235 (s)	0
Cm243+4(s)	0
Np237 (s)	0
Sb125 (s)	0
==========	
TOTAL	0
TRU (l)	0
TRU (s)	0
TOTAL Eu	0
TOTAL SOLIDS	0

TOTAL PRECIPITATE	0	t/d
TOTAL SOLIDS	0	t/d
TOTAL MASS	19.072	t/d
TOTAL VOLUME	19.110	m3/d
DENSITY	0.998	t/m3

STREAM 43 Combined Wash Liquor from Solids Water Washes to Sr/TRU Precipitn.

MASS:	t/d
Al	87.580E-3
Ba	4.688E-9
Ca	48.174E-6
Cd	6.554E-9
Cl	15.324E-3
Cr	620.920E-6
F	3.075E-3
Fe	168.638E-6
Hg	0.0
K	0.102
La	5.094E-6
Ni	61.851E-6
NO2	0.290
NO3	0.499
OH	0.199
Pb	291.913E-6
PO4	5.469E-3
SO4	4.702E-3
TIC	53.441E-3
TOC	4.854E-3
U	9.652E-6
Na	0.711
H2O	17.050
Cs	171.439E-6
Sr	10.193E-6
Tc	17.146E-6
NH3	40.436E-3
TRU	19.706E-6
Am	42.007E-9
Pu	2.952E-6
NO	0.0
Si	1.136E-3
B	216.166E-6
SrCO3	0.0
MnO4-	0.0
Am(OH)3	0.0
O	990.945E-6
O2	0.0
Mn	341.742E-6
Pu(OH)4	0.0
P2O5	0.0
SO2	176.216E-12
CO2	0.0
I2	163.744E-6
N2	0.0
Co	0.0
Eu	2.979E-9
Zn	682.609E-6
Mg	107.847E-6
Zr	152.030E-6
Li	58.231E-6
NO2(g)	205.949E-9
CsIX	0.0
TcIX	0.0
Sugar	0.0
Co(OH)3	0.0
SO4IX	0.0
H+	3.542E-9
(TcO4)-	796.564E-6
B2O3 (s)	0.0
MnO2 (s)	0.0
H2O (s)	0.0
ZnO (s)	0.0
Li2O (s)	0.0
TOC (s)	0.0
Na2O (s)	0.0
K2O (s)	0.0
Al2O3(s)	0.0
CaO (s)	0.0
Cr2O3(s)	0.0
Fe2O3(s)	0.0
NiO (s)	0.0
MgO (s)	0.0
SiO2 (s)	0.0
ZrO2 (s)	0.0
BaO (s)	0.0
Anion(s)	0.0
La2O3(s)	0.0
PbO2 (s)	0.0
UO3 (s)	0.0

ACTIVITY:	TBq/d
Cs137	137.163
Sr90	1.357
Tc99	0.318
Am241	5.461E-3
Co60	1.880E-3
Eu154	18.511E-3
Eu155	18.511E-3
Pu238	885.424E-6
Pu239	6.263E-3
Pu240	1.752E-3
Pu241	70.649E-3
H3	0.0
C14	0.0
I129	212.867E-6
OFP	1.018E-3
U233	55.223E-6
U235	1.200E-6
Cm243+4	0.0
Np237	435.000E-6
Sb125	28.969E-3
Cs137 (s)	0.0
Sr90 (s)	0.0
Tc99 (s)	0.0
Am241 (s)	0.0
Co60 (s)	0.0
Eu154 (s)	0.0
Eu155 (s)	0.0
Pu238 (s)	0.0
Pu239 (s)	0.0
Pu240 (s)	0.0
Pu241 (s)	0.0
H3 (s)	0.0
C14 (s)	0.0
I129 (s)	0
OFP (s)	0.0
U233 (s)	0
U235 (s)	0.0
Cm243+4(s)	0.0
Np237 (s)	0.0
Sb125 (s)	0.0
==========	
TOTAL	138.993
TRU (l)	14.796E-3
TRU (s)	0.0
TOTAL Eu	37.021E-3
TOTAL SOLIDS	0.0

TOTAL PRECIPITATE	0.0	t/d
TOTAL SOLIDS	0.0	t/d
TOTAL MASS	19.072	t/d
TOTAL VOLUME	17.645	m3/d
DENSITY	1.081	t/m3

STREAM 1 LAW Feed from Buffer Tank to Sr/TRU Precipitation

	MASS: t/d
Al	1.200
Ba	64.216E-9
Ca	659.859E-6
Cd	89.771E-9
Cl	0.210
Cr	8.505E-3
F	42.114E-3
Fe	2.310E-3
Hg	0.0
K	1.393
La	69.774E-6
Ni	847.213E-6
NO2	3.976
NO3	6.842
OH	2.725
Pb	3.998E-3
PO4	74.917E-3
SO4	64.410E-3
TIC	0.732
TOC	66.494E-3
U	132.206E-6
Na	9.735
H2O	73.974
Cs	2.348E-3
Sr	139.621E-6
Tc	234.855E-6
NH3	0.554
TRU	269.920E-6
Am	575.387E-9
Pu	40.434E-6
NO	0.0
Si	15.560E-3
B	2.961E-3
SrCO3	0.0
MnO4-	0.0
Am(OH)3	0.0
O	13.574E-3
O2	0.0
Mn	4.681E-3
Pu(OH)4	0.0
P2O5	602.716E-12
SO2	2.414E-9
CO2	0.0
I2	2.243E-3
N2	0.0
Co	625.204E-12
Eu	40.799E-9
Zn	9.350E-3
Mg	1.477E-3
Zr	2.082E-3
Li	797.629E-6
NO2(g)	2.821E-6
CsIX	0.0
TcIX	0.0
Sugar	0.0
Co(OH)3	0.0
SO4IX	0.0
H+	48.523E-9
(TcO4)-	10.911E-3
B2O3 (s)	0.0
MnO2 (s)	12.372E-3
H2O (s)	51.923E-6
ZnO (s)	109.415E-6
Li2O (s)	0.0
TOC (s)	0.444
Na2O (s)	0.976
K2O (s)	0.117
Al2O3(s)	0.155
CaO (s)	9.210E-3
Cr2O3(s)	13.404E-3
Fe2O3(s)	11.413E-3
NiO (s)	1.552E-3
MgO (s)	2.954E-3
SiO2 (s)	27.099E-3
ZrO2 (s)	2.710E-3
BaO (s)	164.122E-6
Anion(s)	11.385E-3
La2O3(s)	183.418E-6
PbO2 (s)	729.929E-6
UO3 (s)	36.821E-3

	ACTIVITY: TBq/d
Cs137	1.879E3
Sr90	18.594
Tc99	4.359
Am241	74.799E-3
Co60	25.752E-3
Eu154	0.254
Eu155	0.254
Pu238	12.128E-3
Pu239	85.785E-3
Pu240	24.003E-3
Pu241	0.968
H3	0.0
C14	0
I129	2.916E-3
OFP	13.945E-3
U233	756.424E-6
U235	16.438E-6
Cm243+4	0.0
Np237	5.958E-3
Sb125	0.397
Cs137 (s)	40.172
Sr90 (s)	31.905
Tc99 (s)	74.026E-3
Am241 (s)	55.368E-3
Co60 (s)	357.116E-6
Eu154 (s)	1.857E-3
Eu155 (s)	1.036E-3
Pu238 (s)	8.456E-3
Pu239 (s)	41.506E-3
Pu240 (s)	11.575E-3
Pu241 (s)	0.466
H3 (s)	2.321E-6
C14 (s)	232.125E-9
I129 (s)	5.180E-9
OFP (s)	22.498E-6
U233 (s)	16.076E-9
U235 (s)	19.339E-6
Cm243+4(s)	1.985E-3
Np237 (s)	2.643E-6
Sb125 (s)	1.143E-3
TOTAL	1.977E3
TRU (l)	0.203
TRU (s)	0.117
TOTAL Eu	0.510
TOTAL SOLIDS	72.740

TOTAL PRECIPITATE	0.0 t/d
TOTAL SOLIDS	1.824 t/d
TOTAL MASS	103.494 t/d
TOTAL VOLUME	84.673 m3/d
DENSITY	1.222 t/m3

STREAM 25 19M NaOH Reagent Feed to Sr/TRU Precipitation

MASS:	t/d
Al	0
Ba	0
Ca	0
Cd	0
Cl	0
Cr	0
F	0
Fe	0
Hg	0
K	0
La	0
Ni	0
NO2	0
NO3	0
OH	0
Pb	0
PO4	0
SO4	0
TIC	0
TOC	0
U	0
Na	0
H2O	0
Cs	0
Sr	0
Tc	0
NH3	0
TRU	0
Am	0
Pu	0
NO	0
Si	0
B	0
SrCO3	0
MnO4-	0
Am(OH)3	0
O	0
O2	0
Mn	0
Pu(OH)4	0
P2O5	0
SO2	0
CO2	0
I2	0
N2	0
Co	0
Eu	0
Zn	0
Mg	0
Zr	0
Li	0
NO2(g)	0
CsIX	0
TcIX	0
Sugar	0
Co(OH)3	0
SO4IX	0
H+	0
(TcO4)-	0
B2O3 (s)	0
MnO2 (s)	0
H2O (s)	0
ZnO (s)	0
Li2O (s)	0
TOC (s)	0
Na2O (s)	0
K2O (s)	0
Al2O3(s)	0
CaO (s)	0
Cr2O3(s)	0
Fe2O3(s)	0
NiO (s)	0
MgO (s)	0
SiO2 (s)	0
ZrO2 (s)	0
BaO (s)	0
Anion(s)	0
La2O3(s)	0
PbO2 (s)	0
UO3 (s)	0

ACTIVITY:	TBq/d
Cs137	0
Sr90	0
Tc99	0
Am241	0
Co60	0
Eu154	0
Eu155	0
Pu238	0
Pu239	0
Pu240	0
Pu241	0
H3	0
C14	0
I129	0
OFP	0
U233	0
U235	0
Cm243+4	0
Np237	0
Sb125	0
Cs137 (s)	0
Sr90 (s)	0
Tc99 (s)	0
Am241 (s)	0
Co60 (s)	0
Eu154 (s)	0
Eu155 (s)	0
Pu238 (s)	0
Pu239 (s)	0
Pu240 (s)	0
Pu241 (s)	0
H3 (s)	0
C14 (s)	0
I129 (s)	0
OFP (s)	0
U233 (s)	0
U235 (s)	0
Cm243+4(s)	0
Np237 (s)	0
Sb125 (s)	0
==========	
TOTAL	0
TRU (l)	0
TRU (s)	0
TOTAL Eu	0
TOTAL SOLIDS	0

TOTAL PRECIPITATE	0 t/d
TOTAL SOLIDS	0 t/d
TOTAL MASS	0 t/d
TOTAL VOLUME	0 m3/d
DENSITY	1.522 t/m3

STREAM 78 1.0M NaMnO4 Reagent Feed to Sr/TRU Precipitation

MASS:	t/d
Al	0
Ba	0
Ca	0
Cd	0
Cl	0
Cr	0
F	0
Fe	0
Hg	0
K	0
La	0
Ni	0
NO2	0
NO3	0
OH	0
Pb	0
PO4	0
SO4	0
TIC	0
TOC	0
U	0
Na	0
H2O	0
Cs	0
Sr	0
Tc	0
NH3	0
TRU	0
Am	0
Pu	0
NO	0
Si	0
B	0
SrCO3	0
MnO4-	0
Am(OH)3	0
O	0
O2	0
Mn	0
Pu(OH)4	0
P2O5	0
SO2	0
CO2	0
I2	0
N2	0
Co	0
Eu	0
Zn	0
Mg	0
Zr	0
Li	0
NO2(g)	0
CsIX	0
TcIX	0
Sugar	0
Co(OH)3	0
SO4IX	0
H+	0
(TcO4)-	0
B2O3 (s)	0
MnO2 (s)	0
H2O (s)	0
ZnO (s)	0
Li2O (s)	0
TOC (s)	0
Na2O (s)	0
K2O (s)	0
Al2O3(s)	0
CaO (s)	0
Cr2O3(s)	0
Fe2O3(s)	0
NiO (s)	0
MgO (s)	0
SiO2 (s)	0
ZrO2 (s)	0
BaO (s)	0
Anion(s)	0
La2O3(s)	0
PbO2 (s)	0
UO3 (s)	0

ACTIVITY:	TBq/d
Cs137	0
Sr90	0
Tc99	0
Am241	0
Co60	0
Eu154	0
Eu155	0
Pu238	0
Pu239	0
Pu240	0
Pu241	0
H3	0
C14	0
I129	0
OFP	0
U233	0
U235	0
Cm243+4	0
Np237	0
Sb125	0
Cs137 (s)	0
Sr90 (s)	0
Tc99 (s)	0
Am241 (s)	0
Co60 (s)	0
Eu154 (s)	0
Eu155 (s)	0
Pu238 (s)	0
Pu239 (s)	0
Pu240 (s)	0
Pu241 (s)	0
H3 (s)	0
C14 (s)	0
I129 (s)	0
OFP (s)	0
U233 (s)	0
U235 (s)	0
Cm243+4(s)	0
Np237 (s)	0
Sb125 (s)	0
==========	
TOTAL	0
TRU (l)	0
TRU (s)	0
TOTAL Eu	0
TOTAL SOLIDS	0

TOTAL PRECIPITATE	0 t/d
TOTAL SOLIDS	0 t/d
TOTAL MASS	0 t/d
TOTAL VOLUME	0 m3/d
DENSITY	1.094 t/m3

STREAM 79 1M Sr(NO3)2 Reagent Feed to Sr/TRU Precipitation

MASS:	t/d	ACTIVITY:	TBq/d
Al	0	Cs137	0
Ba	0	Sr90	0
Ca	0	Tc99	0
Cd	0	Am241	0
Cl	0	Co60	0
Cr	0	Eu154	0
F	0	Eu155	0
Fe	0	Pu238	0
Hg	0	Pu239	0
K	0	Pu240	0
La	0	Pu241	0
Ni	0	H3	0
NO2	0	C14	0
NO3	0	I129	0
OH	0	OFP	0
Pb	0	U233	0
PO4	0	U235	0
SO4	0	Cm243+4	0
TIC	0	Np237	0
TOC	0	Sb125	0
U	0	Cs137 (s)	0
Na	0	Sr90 (s)	0
H2O	0	Tc99 (s)	0
Cs	0	Am241 (s)	0
Sr	0	Co60 (s)	0
Tc	0	Eu154 (s)	0
NH3	0	Eu155 (s)	0
TRU	0	Pu238 (s)	0
Am	0	Pu239 (s)	0
Pu	0	Pu240 (s)	0
NO	0	Pu241 (s)	0
Si	0	H3 (s)	0
B	0	C14 (s)	0
SrCO3	0	I129 (s)	0
MnO4-	0	OFP (s)	0
Am(OH)3	0	U233 (s)	0
O	0	U235 (s)	0
O2	0	Cm243+4 (s)	0
Mn	0	Np237 (s)	0
Pu(OH)4	0	Sb125 (s)	0
P2O5	0	==========	
SO2	0	TOTAL	0
CO2	0	TRU (l)	0
I2	0	TRU (s)	0
N2	0	TOTAL Eu	0
Co	0	TOTAL SOLIDS	0
Eu	0		
Zn	0		
Mg	0		
Zr	0		
Li	0		
NO2(g)	0		
CsIX	0		
TcIX	0		
Sugar	0		
Co(OH)3	0		
SO4IX	0		
H+	0		
(TcO4)-	0		
B2O3 (s)	0		
MnO2 (s)	0		
H2O (s)	0		
ZnO (s)	0		
Li2O (s)	0		
TOC (s)	0		
Na2O (s)	0		
K2O (s)	0		
Al2O3(s)	0		
CaO (s)	0		
Cr2O3(s)	0		
Fe2O3(s)	0		
NiO (s)	0		
MgO (s)	0		
SiO2 (s)	0		
ZrO2 (s)	0		
BaO (s)	0	TOTAL PRECIPITATE	0 t/d
Anion(s)	0	TOTAL SOLIDS	0 t/d
La2O3(s)	0	TOTAL MASS	0 t/d
PbO2 (s)	0	TOTAL VOLUME	0 m3/d
UO3 (s)	0	DENSITY	1.150 t/m3

STREAM 185 LAW Feed to Cs IX Dilution

	MASS: t/d
Al	1.099
Ba	58.806E-9
Ca	604.269E-6
Cd	82.208E-9
Cl	0.192
Cr	7.789E-3
F	38.566E-3
Fe	2.115E-3
Hg	0.0
K	1.276
La	63.895E-6
Ni	775.839E-6
NO2	3.641
NO3	6.265
OH	2.495
Pb	3.662E-3
PO4	68.605E-3
SO4	58.984E-3
TIC	0.670
TOC	60.892E-3
U	121.068E-6
Na	8.915
H2O	69.013
Cs	2.150E-3
Sr	127.859E-6
Tc	215.069E-6
NH3	0.507
TRU	247.180E-6
Am	526.913E-9
Pu	37.028E-6
NO	0.0
Si	14.249E-3
B	2.712E-3
SrCO3	0.0
MnO4-	0.0
Am(OH)3	0.0
O	12.430E-3
O2	0.0
Mn	4.287E-3
Pu(OH)4	0.0
P2O5	551.940E-12
SO2	2.210E-9
CO2	0.0
I2	2.054E-3
N2	0.0
Co	572.533E-12
Eu	37.362E-9
Zn	8.562E-3
Mg	1.353E-3
Zr	1.907E-3
Li	730.432E-6
NO2(g)	2.583E-6
CsIX	0.0
TcIX	0.0
Sugar	0.0
Co(OH)3	0.0
SO4IX	0.0
H+	44.435E-9
(TcO4)-	9.992E-3
B2O3 (s)	0.0
MnO2 (s)	12.372E-9
H2O (s)	0.0
ZnO (s)	109.415E-12
Li2O (s)	0.0
TOC (s)	444.227E-9
Na2O (s)	976.348E-9
K2O (s)	117.494E-9
Al2O3(s)	155.433E-9
CaO (s)	9.210E-9
Cr2O3(s)	13.404E-9
Fe2O3(s)	11.413E-9
NiO (s)	1.552E-9
MgO (s)	2.954E-9
SiO2 (s)	27.099E-9
ZrO2 (s)	2.710E-9
BaO (s)	164.122E-12
Anion(s)	11.385E-9
La2O3(s)	183.418E-12
PbO2 (s)	729.928E-12
UO3 (s)	36.821E-9

	ACTIVITY: TBq/d
Cs137	1.721E3
Sr90	17.028
Tc99	3.991
Am241	68.497E-3
Co60	23.582E-3
Eu154	0.232
Eu155	0.232
Pu238	11.106E-3
Pu239	78.558E-3
Pu240	21.981E-3
Pu241	0.886
H3	0.0
C14	0
I129	2.670E-3
OFP	12.770E-3
U233	692.698E-6
U235	15.054E-6
Cm243+4	0.0
Np237	5.456E-3
Sb125	0.363
Cs137 (s)	42.016E-6
Sr90 (s)	33.369E-6
Tc99 (s)	77.423E-9
Am241 (s)	57.909E-9
Co60 (s)	373.503E-12
Eu154 (s)	1.942E-9
Eu155 (s)	1.083E-9
Pu238 (s)	8.844E-9
Pu239 (s)	43.411E-9
Pu240 (s)	12.106E-9
Pu241 (s)	487.173E-9
H3 (s)	0.0
C14 (s)	0.0
I129 (s)	0.0
OFP (s)	0.0
U233 (s)	0.0
U235 (s)	0.0
Cm243+4(s)	2.077E-9
Np237 (s)	0.0
Sb125 (s)	1.195E-9
==========	
TOTAL	1.743E3
TRU (l)	0.186
TRU (s)	122.272E-9
TOTAL Eu	0.464
TOTAL SOLIDS	76.078E-6

TOTAL PRECIPITATE	0.0 t/d
TOTAL SOLIDS	1.824E-6 t/d
TOTAL MASS	94.376 t/d
TOTAL VOLUME	77.525 m3/d
DENSITY	1.217 t/m3

STREAM 181 Water Feed to Cs IX Dilution

MASS:	t/d
Al	0
Ba	0
Ca	0
Cd	0
Cl	0
Cr	0
F	0
Fe	0
Hg	0
K	0
La	0
Ni	0
NO2	0
NO3	0
OH	0
Pb	0
PO4	0
SO4	0
TIC	0
TOC	0
U	0
Na	0
H2O	998.000E-12
Cs	0
Sr	0
Tc	0
NH3	0
TRU	0
Am	0
Pu	0
NO	0
Si	0
B	0
SrCO3	0
MnO4-	0
Am(OH)3	0
O	0
O2	0
Mn	0
Pu(OH)4	0
P2O5	0
SO2	0
CO2	0
I2	0
N2	0
Co	0
Eu	0
Zn	0
Mg	0
Zr	0
Li	0
NO2(g)	0
CsIX	0
TcIX	0
Sugar	0
Co(OH)3	0
SO4IX	0
H+	0
(TcO4)-	0
B2O3 (s)	0
MnO2 (s)	0
H2O (s)	0
ZnO (s)	0
Li2O (s)	0
TOC (s)	0
Na2O (s)	0
K2O (s)	0
Al2O3(s)	0
CaO (s)	0
Cr2O3(s)	0
Fe2O3(s)	0
NiO (s)	0
MgO (s)	0
SiO2 (s)	0
ZrO2 (s)	0
BaO (s)	0
Anion(s)	0
La2O3(s)	0
PbO2 (s)	0
UO3 (s)	0

ACTIVITY:	TBq/d
Cs137	0
Sr90	0
Tc99	0
Am241	0
Co60	0
Eu154	0
Eu155	0
Pu238	0
Pu239	0
Pu240	0
Pu241	0
H3	0
C14	0
I129	0
OFP	0
U233	0
U235	0
Cm243+4	0
Np237	0
Sb125	0
Cs137 (s)	0
Sr90 (s)	0
Tc99 (s)	0
Am241 (s)	0
Co60 (s)	0
Eu154 (s)	0
Eu155 (s)	0
Pu238 (s)	0
Pu239 (s)	0
Pu240 (s)	0
Pu241 (s)	0
H3 (s)	0
C14 (s)	0
I129 (s)	0
OFP (s)	0
U233 (s)	0
U235 (s)	0
Cm243+4(s)	0
Np237 (s)	0
Sb125 (s)	0
TOTAL	0
TRU (l)	0
TRU (s)	0
TOTAL Eu	0
TOTAL SOLIDS	0

TOTAL PRECIPITATE	0	t/d
TOTAL SOLIDS	0	t/d
TOTAL MASS	998.000E-12	t/d
TOTAL VOLUME	1.000E-9	m3/d
DENSITY	0.998	t/m3

STREAM 161 Feed to Cesium Ion Exchange from Dilution

MASS:	t/d
Al	1.099
Ba	58.806E-9
Ca	604.269E-6
Cd	82.208E-9
Cl	0.192
Cr	7.789E-3
F	38.566E-3
Fe	2.115E-3
Hg	0.0
K	1.276
La	63.895E-6
Ni	775.839E-6
NO2	3.641
NO3	6.265
OH	2.495
Pb	3.662E-3
PO4	68.605E-3
SO4	58.984E-3
TIC	0.670
TOC	60.892E-3
U	121.068E-6
Na	8.915
H2O	69.013
Cs	2.150E-3
Sr	127.859E-6
Tc	215.069E-6
NH3	0.507
TRU	247.180E-6
Am	526.913E-9
Pu	37.028E-6
NO	0.0
Si	14.249E-3
B	2.712E-3
SrCO3	0.0
MnO4-	0.0
Am(OH)3	0.0
O	12.430E-3
O2	0.0
Mn	4.287E-3
Pu(OH)4	0.0
P2O5	551.940E-12
SO2	2.210E-9
CO2	0.0
I2	2.054E-3
N2	0.0
Co	572.533E-12
Eu	37.362E-9
Zn	8.562E-3
Mg	1.353E-3
Zr	1.907E-3
Li	730.432E-6
NO2(g)	2.583E-6
CsIX	0.0
TcIX	0.0
Sugar	0.0
Co(OH)3	0.0
SO4IX	0.0
H+	44.435E-9
(TcO4)-	9.992E-3
B2O3 (s)	0.0
MnO2 (s)	12.372E-9
H2O (s)	0.0
ZnO (s)	109.415E-12
Li2O (s)	0.0
TOC (s)	444.227E-9
Na2O (s)	976.348E-9
K2O (s)	117.494E-9
Al2O3(s)	155.433E-9
CaO (s)	9.210E-9
Cr2O3(s)	13.404E-9
Fe2O3(s)	11.413E-9
NiO (s)	1.552E-9
MgO (s)	2.954E-9
SiO2 (s)	27.099E-9
ZrO2 (s)	2.710E-9
BaO (s)	164.122E-12
Anion(s)	11.385E-9
La2O3(s)	183.418E-12
PbO2 (s)	729.928E-12
UO3 (s)	36.821E-9

ACTIVITY:	TBq/d
Cs137	1.721E3
Sr90	17.028
Tc99	3.991
Am241	68.497E-3
Co60	23.582E-3
Eu154	0.232
Eu155	0.232
Pu238	11.106E-3
Pu239	78.558E-3
Pu240	21.981E-3
Pu241	0.886
H3	0.0
C14	0
I129	2.670E-3
OFP	12.770E-3
U233	692.698E-6
U235	15.054E-6
Cm243+4	0.0
Np237	5.456E-3
Sb125	0.363
Cs137 (s)	42.016E-6
Sr90 (s)	33.369E-6
Tc99 (s)	77.423E-9
Am241 (s)	57.909E-9
Co60 (s)	373.503E-12
Eu154 (s)	1.942E-9
Eu155 (s)	1.083E-9
Pu238 (s)	8.844E-9
Pu239 (s)	43.411E-9
Pu240 (s)	12.106E-9
Pu241 (s)	487.173E-9
H3 (s)	0.0
C14 (s)	0.0
I129 (s)	0.0
OFP (s)	0.0
U233 (s)	0.0
U235 (s)	0.0
Cm243+4(s)	2.077E-9
Np237 (s)	0.0
Sb125 (s)	1.195E-9
TOTAL	1.743E3
TRU (l)	0.186
TRU (s)	122.272E-9
TOTAL Eu	0.464
TOTAL SOLIDS	76.078E-6

TOTAL PRECIPITATE	0.0 t/d
TOTAL SOLIDS	1.824E-6 t/d
TOTAL MASS	94.376 t/d
TOTAL VOLUME	77.523 m3/d
DENSITY	1.217 t/m3

STREAM 44 0.1M NaOH Cesium Ion Exchange Residual Feed Displacement

MASS:	t/d
Al	0
Ba	0
Ca	0
Cd	0
Cl	0
Cr	0
F	0
Fe	0
Hg	0
K	0
La	0
Ni	0
NO2	0
NO3	0
OH	3.242E-3
Pb	0
PO4	0
SO4	0
TIC	0
TOC	0
U	0
Na	4.385E-3
H2O	1.910
Cs	0
Sr	0
Tc	0
NH3	0
TRU	0
Am	0
Pu	0
NO	0
Si	0
B	0
SrCO3	0
MnO4-	0
Am(OH)3	0
O	0
O2	0
Mn	0
Pu(OH)4	0
P2O5	0
SO2	0
CO2	0
I2	0
N2	0
Co	0
Eu	0
Zn	0
Mg	0
Zr	0
Li	0
NO2(g)	0
CsIX	0
TcIX	0
Sugar	0
Co(OH)3	0
SO4IX	0
H+	9.302E-9
(TcO4)-	0
B2O3 (s)	0
MnO2 (s)	0
H2O (s)	0
ZnO (s)	0
Li2O (s)	0
TOC (s)	0
Na2O (s)	0
K2O (s)	0
Al2O3(s)	0
CaO (s)	0
Cr2O3(s)	0
Fe2O3(s)	0
NiO (s)	0
MgO (s)	0
SiO2 (s)	0
ZrO2 (s)	0
BaO (s)	0
Anion(s)	0
La2O3(s)	0
PbO2 (s)	0
UO3 (s)	0

ACTIVITY:	TBq/d
Cs137	0
Sr90	0
Tc99	0
Am241	0
Co60	0
Eu154	0
Eu155	0
Pu238	0
Pu239	0
Pu240	0
Pu241	0
H3	0
C14	0
I129	0
OFP	0
U233	0
U235	0
Cm243+4	0
Np237	0
Sb125	0
Cs137 (s)	0
Sr90 (s)	0
Tc99 (s)	0
Am241 (s)	0
Co60 (s)	0
Eu154 (s)	0
Eu155 (s)	0
Pu238 (s)	0
Pu239 (s)	0
Pu240 (s)	0
Pu241 (s)	0
H3 (s)	0
C14 (s)	0
I129 (s)	0
OFP (s)	0
U233 (s)	0
U235 (s)	0
Cm243+4(s)	0
Np237 (s)	0
Sb125 (s)	0
TOTAL	0
TRU (l)	0
TRU (s)	0
TOTAL Eu	0
TOTAL SOLIDS	0

TOTAL PRECIPITATE	0 t/d
TOTAL SOLIDS	0 t/d
TOTAL MASS	1.918 t/d
TOTAL VOLUME	1.907 m3/d
DENSITY	1.006 t/m3

STREAM 162 First H_2O Cesium IX Residual NaOH Displacement (Pre-Elution)

MASS:	t/d
Al	0
Ba	0
Ca	0
Cd	0
Cl	0
Cr	0
F	0
Fe	0
Hg	0
K	0
La	0
Ni	0
NO2	0
NO3	0
OH	0
Pb	0
PO4	0
SO4	0
TIC	0
TOC	0
U	0
Na	0
H2O	0.774
Cs	0
Sr	0
Tc	0
NH3	0
TRU	0
Am	0
Pu	0
NO	0
Si	0
B	0
SrCO3	0
MnO4-	0
Am(OH)3	0
O	0
O2	0
Mn	0
Pu(OH)4	0
P2O5	0
SO2	0
CO2	0
I2	0
N2	0
Co	0
Eu	0
Zn	0
Mg	0
Zr	0
Li	0
NO2(g)	0
CsIX	0
TcIX	0
Sugar	0
Co(OH)3	0
SO4IX	0
H+	0
(TcO4)-	0
B2O3 (s)	0
MnO2 (s)	0
H2O (s)	0
ZnO (s)	0
Li2O (s)	0
TOC (s)	0
Na2O (s)	0
K2O (s)	0
Al2O3(s)	0
CaO (s)	0
Cr2O3(s)	0
Fe2O3(s)	0
NiO (s)	0
MgO (s)	0
SiO2 (s)	0
ZrO2 (s)	0
BaO (s)	0
Anion(s)	0
La2O3(s)	0
PbO2 (s)	0
UO3 (s)	0

ACTIVITY:	TBq/d
Cs137	0
Sr90	0
Tc99	0
Am241	0
Co60	0
Eu154	0
Eu155	0
Pu238	0
Pu239	0
Pu240	0
Pu241	0
H3	0
C14	0
I129	0
OFP	0
U233	0
U235	0
Cm243+4	0
Np237	0
Sb125	0
Cs137 (s)	0
Sr90 (s)	0
Tc99 (s)	0
Am241 (s)	0
Co60 (s)	0
Eu154 (s)	0
Eu155 (s)	0
Pu238 (s)	0
Pu239 (s)	0
Pu240 (s)	0
Pu241 (s)	0
H3 (s)	0
C14 (s)	0
I129 (s)	0
OFP (s)	0
U233 (s)	0
U235 (s)	0
Cm243+4(s)	0
Np237 (s)	0
Sb125 (s)	0
==========	
TOTAL	0
TOTAL TRU	0
TOTAL Eu	0
TOTAL SOLIDS	0

TOTAL PRECIPITATE	0	t/d
TOTAL SOLIDS	0	t/d
TOTAL MASS	0.774	t/d
TOTAL VOLUME	0.775	m3/d
DENSITY	0.998	t/m3

STREAM 163 Second H_2O Cesium IX Residual Caustic Displacement (Pre-Elution)

MASS:	t/d
Al	0
Ba	0
Ca	0
Cd	0
Cl	0
Cr	0
F	0
Fe	0
Hg	0
K	0
La	0
Ni	0
NO2	0
NO3	0
OH	0
Pb	0
PO4	0
SO4	0
TIC	0
TOC	0
U	0
Na	0
H2O	0.774
Cs	0
Sr	0
Tc	0
NH3	0
TRU	0
Am	0
Pu	0
NO	0
Si	0
B	0
SrCO3	0
MnO4-	0
Am(OH)3	0
O	0
O2	0
Mn	0
Pu(OH)4	0
P2O5	0
SO2	0
CO2	0
I2	0
N2	0
Co	0
Eu	0
Zn	0
Mg	0
Zr	0
Li	0
NO2(g)	0
CsIX	0
TcIX	0
Sugar	0
Co(OH)3	0
SO4IX	0
H+	0
(TcO4)-	0
B2O3 (s)	0
MnO2 (s)	0
H2O (s)	0
ZnO (s)	0
Li2O (s)	0
TOC (s)	0
Na2O (s)	0
K2O (s)	0
Al2O3(s)	0
CaO (s)	0
Cr2O3(s)	0
Fe2O3(s)	0
NiO (s)	0
MgO (s)	0
SiO2 (s)	0
ZrO2 (s)	0
BaO (s)	0
Anion(s)	0
La2O3(s)	0
PbO2 (s)	0
UO3 (s)	0

ACTIVITY:	TBq/d
Cs137	0
Sr90	0
Tc99	0
Am241	0
Co60	0
Eu154	0
Eu155	0
Pu238	0
Pu239	0
Pu240	0
Pu241	0
H3	0
C14	0
I129	0
OFP	0
U233	0
U235	0
Cm243+4	0
Np237	0
Sb125	0
Cs137 (s)	0
Sr90 (s)	0
Tc99 (s)	0
Am241 (s)	0
Co60 (s)	0
Eu154 (s)	0
Eu155 (s)	0
Pu238 (s)	0
Pu239 (s)	0
Pu240 (s)	0
Pu241 (s)	0
H3 (s)	0
C14 (s)	0
I129 (s)	0
OFP (s)	0
U233 (s)	0
U235 (s)	0
Cm243+4(s)	0
Np237 (s)	0
Sb125 (s)	0
==========	
TOTAL	0
TOTAL TRU	0
TOTAL Eu	0
TOTAL SOLIDS	0

TOTAL PRECIPITATE	0 t/d
TOTAL SOLIDS	0 t/d
TOTAL MASS	0.774 t/d
TOTAL VOLUME	0.775 m3/d
DENSITY	0.998 t/m3

STREAM 45 Recycle to Feed from Cesium Ion Exchange

MASS:	t/d
Al	0
Ba	0
Ca	0
Cd	0
Cl	0
Cr	0
F	0
Fe	0
Hg	0
K	0
La	0
Ni	0
NO2	0
NO3	0
OH	1.621E-3
Pb	0
PO4	0
SO4	0
TIC	0
TOC	0
U	0
Na	2.193E-3
H2O	1.729
Cs	0
Sr	0
Tc	0
NH3	0
TRU	0
Am	0
Pu	0
NO	0
Si	0
B	0
SrCO3	0
MnO4-	0
Am(OH)3	0
O	0
O2	0
Mn	0
Pu(OH)4	0
P2O5	0
SO2	0
CO2	0
I2	0
N2	0
Co	0
Eu	0
Zn	0
Mg	0
Zr	0
Li	0
NO2(g)	0
CsIX	0
TcIX	0
Sugar	0
Co(OH)3	0
SO4IX	0
H+	4.651E-9
(TcO4)-	0
B2O3 (s)	0
MnO2 (s)	0
H2O (s)	0
ZnO (s)	0
Li2O (s)	0
TOC (s)	0
Na2O (s)	0
K2O (s)	0
Al2O3(s)	0
CaO (s)	0
Cr2O3(s)	0
Fe2O3(s)	0
NiO (s)	0
MgO (s)	0
SiO2 (s)	0
ZrO2 (s)	0
BaO (s)	0
Anion(s)	0
La2O3(s)	0
PbO2 (s)	0
UO3 (s)	0

ACTIVITY:	TBq/d
Cs137	0
Sr90	0
Tc99	0
Am241	0
Co60	0
Eu154	0
Eu155	0
Pu238	0
Pu239	0
Pu240	0
Pu241	0
H3	0
C14	0
I129	0
OFP	0
U233	0
U235	0
Cm243+4	0
Np237	0
Sb125	0
Cs137 (s)	0
Sr90 (s)	0
Tc99 (s)	0
Am241 (s)	0
Co60 (s)	0
Eu154 (s)	0
Eu155 (s)	0
Pu238 (s)	0
Pu239 (s)	0
Pu240 (s)	0
Pu241 (s)	0
H3 (s)	0
C14 (s)	0
I129 (s)	0
OFP (s)	0
U233 (s)	0
U235 (s)	0
Cm243+4(s)	0
Np237 (s)	0
Sb125 (s)	0
TOTAL	0
TOTAL TRU	0
TOTAL Eu	0
TOTAL SOLIDS	0

TOTAL PRECIPITATE	0 t/d
TOTAL SOLIDS	0 t/d
TOTAL MASS	1.733 t/d
TOTAL VOLUME	1.731 m3/d
DENSITY	1.001 t/m3

STREAM 178 Cesium Ion Exchange 0.5M Regeneration Caustic

MASS:	t/d
Al	0
Ba	0
Ca	0
Cd	0
Cl	0
Cr	0
F	0
Fe	0
Hg	0
K	0
La	0
Ni	0
NO2	0
NO3	0
OH	6.589E-3
Pb	0
PO4	0
SO4	0
TIC	0
TOC	0
U	0
Na	8.915E-3
H2O	1.550
Cs	0
Sr	0
Tc	0
NH3	0
TRU	0
Am	0
Pu	0
NO	0
Si	0
B	0
SrCO3	0
MnO4-	0
Am(OH)3	0
O	0
O2	0
Mn	0
Pu(OH)4	0
P2O5	0
SO2	0
CO2	0
I2	0
N2	0
Co	0
Eu	0
Zn	0
Mg	0
Zr	0
Li	0
NO2(g)	0
CsIX	0
TcIX	0
Sugar	0
Co(OH)3	0
SO4IX	0
H+	0
(TcO4)-	0
B2O3 (s)	0
MnO2 (s)	0
H2O (s)	0
ZnO (s)	0
Li2O (s)	0
TOC (s)	0
Na2O (s)	0
K2O (s)	0
Al2O3(s)	0
CaO (s)	0
Cr2O3(s)	0
Fe2O3(s)	0
NiO (s)	0
MgO (s)	0
SiO2 (s)	0
ZrO2 (s)	0
BaO (s)	0
Anion(s)	0
La2O3(s)	0
PbO2 (s)	0
UO3 (s)	0

ACTIVITY:	TBq/d
Cs137	0
Sr90	0
Tc99	0
Am241	0
Co60	0
Eu154	0
Eu155	0
Pu238	0
Pu239	0
Pu240	0
Pu241	0
H3	0
C14	0
I129	0
OFP	0
U233	0
U235	0
Cm243+4	0
Np237	0
Sb125	0
Cs137 (s)	0
Sr90 (s)	0
Tc99 (s)	0
Am241 (s)	0
Co60 (s)	0
Eu154 (s)	0
Eu155 (s)	0
Pu238 (s)	0
Pu239 (s)	0
Pu240 (s)	0
Pu241 (s)	0
H3 (s)	0
C14 (s)	0
I129 (s)	0
OFP (s)	0
U233 (s)	0
U235 (s)	0
Cm243+4(s)	0
Np237 (s)	0
Sb125 (s)	0
==========	
TOTAL	0
TOTAL TRU	0
TOTAL Eu	0
TOTAL SOLIDS	0

TOTAL PRECIPITATE	0 t/d
TOTAL SOLIDS	0 t/d
TOTAL MASS	1.566 t/d
TOTAL VOLUME	1.550 m3/d
DENSITY	1.010 t/m3

STREAM 179 Regeneration Caustic Recycle for Cs IX Column Feed Displacement

MASS:	t/d
Al	0
Ba	0
Ca	0
Cd	0
Cl	0
Cr	0
F	0
Fe	0
Hg	0
K	0
La	0
Ni	0
NO2	0
NO3	0
OH	1.713E-3
Pb	0
PO4	0
SO4	0
TIC	0
TOC	0
U	0
Na	2.318E-3
H2O	1.551
Cs	0
Sr	0
Tc	0
NH3	0
TRU	0
Am	0
Pu	0
NO	0
Si	0
B	0
SrCO3	0
MnO4-	0
Am(OH)3	0
O	0
O2	0
Mn	0
Pu(OH)4	0
P2O5	0
SO2	0
CO2	0
I2	0
N2	0
Co	0
Eu	0
Zn	0
Mg	0
Zr	0
Li	0
NO2(g)	0
CsIX	0
TcIX	0
Sugar	0
Co(OH)3	0
SO4IX	0
H+	9.302E-9
(TcO4)-	0
B2O3 (s)	0
MnO2 (s)	0
H2O (s)	0
ZnO (s)	0
Li2O (s)	0
TOC (s)	0
Na2O (s)	0
K2O (s)	0
Al2O3(s)	0
CaO (s)	0
Cr2O3(s)	0
Fe2O3(s)	0
NiO (s)	0
MgO (s)	0
SiO2 (s)	0
ZrO2 (s)	0
BaO (s)	0
Anion(s)	0
La2O3(s)	0
PbO2 (s)	0
UO3 (s)	0

ACTIVITY:	TBq/d
Cs137	0
Sr90	0
Tc99	0
Am241	0
Co60	0
Eu154	0
Eu155	0
Pu238	0
Pu239	0
Pu240	0
Pu241	0
H3	0
C14	0
I129	0
OFP	0
U233	0
U235	0
Cm243+4	0
Np237	0
Sb125	0
Cs137 (s)	0
Sr90 (s)	0
Tc99 (s)	0
Am241 (s)	0
Co60 (s)	0
Eu154 (s)	0
Eu155 (s)	0
Pu238 (s)	0
Pu239 (s)	0
Pu240 (s)	0
Pu241 (s)	0
H3 (s)	0
C14 (s)	0
I129 (s)	0
OFP (s)	0
U233 (s)	0
U235 (s)	0
Cm243+4(s)	0
Np237 (s)	0
Sb125 (s)	0
TOTAL	0
TOTAL TRU	0
TOTAL Eu	0
TOTAL SOLIDS	0

TOTAL PRECIPITATE	0 t/d
TOTAL SOLIDS	0 t/d
TOTAL MASS	1.555 t/d
TOTAL VOLUME	1.553 m3/d
DENSITY	1.001 t/m3

STREAM 184 Fresh 0.5M Caustic Makeup for Cs IX Column Feed Displacement

MASS:	t/d
Al	0
Ba	0
Ca	0
Cd	0
Cl	0
Cr	0
F	0
Fe	0
Hg	0
K	0
La	0
Ni	0
NO2	0
NO3	0
OH	1.528E-3
Pb	0
PO4	0
SO4	0
TIC	0
TOC	0
U	0
Na	2.068E-3
H2O	0.360
Cs	0
Sr	0
Tc	0
NH3	0
TRU	0
Am	0
Pu	0
NO	0
Si	0
B	0
SrCO3	0
MnO4-	0
Am(OH)3	0
O	0
O2	0
Mn	0
Pu(OH)4	0
P2O5	0
SO2	0
CO2	0
I2	0
N2	0
Co	0
Eu	0
Zn	0
Mg	0
Zr	0
Li	0
NO2(g)	0
CsIX	0
TcIX	0
Sugar	0
Co(OH)3	0
SO4IX	0
H+	0
(TcO4)-	0
B2O3 (s)	0
MnO2 (s)	0
H2O (s)	0
ZnO (s)	0
Li2O (s)	0
TOC (s)	0
Na2O (s)	0
K2O (s)	0
Al2O3(s)	0
CaO (s)	0
Cr2O3(s)	0
Fe2O3(s)	0
NiO (s)	0
MgO (s)	0
SiO2 (s)	0
ZrO2 (s)	0
BaO (s)	0
Anion(s)	0
La2O3(s)	0
PbO2 (s)	0
UO3 (s)	0

ACTIVITY:	TBq/d
Cs137	0
Sr90	0
Tc99	0
Am241	0
Co60	0
Eu154	0
Eu155	0
Pu238	0
Pu239	0
Pu240	0
Pu241	0
H3	0
C14	0
I129	0
OFP	0
U233	0
U235	0
Cm243+4	0
Np237	0
Sb125	0
Cs137 (s)	0
Sr90 (s)	0
Tc99 (s)	0
Am241 (s)	0
Co60 (s)	0
Eu154 (s)	0
Eu155 (s)	0
Pu238 (s)	0
Pu239 (s)	0
Pu240 (s)	0
Pu241 (s)	0
H3 (s)	0
C14 (s)	0
I129 (s)	0
OFP (s)	0
U233 (s)	0
U235 (s)	0
Cm243+4(s)	0
Np237 (s)	0
Sb125 (s)	0
==========	
TOTAL	0
TOTAL TRU	0
TOTAL Eu	0
TOTAL SOLIDS	0

TOTAL PRECIPITATE	0	t/d
TOTAL SOLIDS	0	t/d
TOTAL MASS	0.363	t/d
TOTAL VOLUME	0.360	m3/d
DENSITY	1.010	t/m3

STREAM 46 Eluate from Cesium Ion Exchange to Nitric Acid Recovery

MASS:	t/d
Al	0.0
Ba	0.0
Ca	0.0
Cd	0.0
Cl	0.0
Cr	0.0
F	0.0
Fe	0.0
Hg	0.0
K	1.012E-3
La	0.0
Ni	0.0
NO2	0.0
NO3	0.365
OH	0.0
Pb	0.0
PO4	0.0
SO4	0.0
TIC	0.0
TOC	0.0
U	0.0
Na	21.210E-3
H2O	13.127
Cs	2.150E-3
Sr	0.0
Tc	0.0
NH3	0.0
TRU	0.0
Am	0.0
Pu	0.0
NO	0.0
Si	0.0
B	0.0
SrCO3	0.0
MnO4-	0.0
Am(OH)3	0.0
O	0.0
O2	0.0
Mn	0.0
Pu(OH)4	0.0
P2O5	0.0
SO2	0.0
CO2	0.0
I2	0.0
N2	0.0
Co	0.0
Eu	0.0
Zn	0.0
Mg	0.0
Zr	0.0
Li	0.0
NO2(g)	0.0
CsIX	0.0
TcIX	0.0
Sugar	0.0
Co(OH)3	0.0
SO4IX	0.0
H+	4.927E-3
(TcO4)-	0.0
B2O3 (s)	0.0
MnO2 (s)	0.0
H2O (s)	0.0
ZnO (s)	0.0
Li2O (s)	0.0
TOC (s)	0.0
Na2O (s)	0.0
K2O (s)	0.0
Al2O3(s)	0.0
CaO (s)	0.0
Cr2O3(s)	0.0
Fe2O3(s)	0.0
NiO (s)	0.0
MgO (s)	0.0
SiO2 (s)	0.0
ZrO2 (s)	0.0
BaO (s)	0.0
Anion(s)	0.0
La2O3(s)	0.0
PbO2 (s)	0.0
UO3 (s)	0.0

ACTIVITY:	TBq/d
Cs137	1.720E3
Sr90	0
Tc99	0
Am241	0
Co60	0
Eu154	0
Eu155	0
Pu238	0
Pu239	0
Pu240	0
Pu241	0
H3	0
C14	0
I129	0
OFP	0
U233	0
U235	0
Cm243+4	0
Np237	0
Sb125	0
Cs137 (s)	0
Sr90 (s)	0
Tc99 (s)	0
Am241 (s)	0
Co60 (s)	0
Eu154 (s)	0
Eu155 (s)	0
Pu238 (s)	0
Pu239 (s)	0
Pu240 (s)	0
Pu241 (s)	0
H3 (s)	0
C14 (s)	0
I129 (s)	0
OFP (s)	0
U233 (s)	0
U235 (s)	0
Cm243+4(s)	0
Np237 (s)	0
Sb125 (s)	0
TOTAL	1.720E3
TOTAL TRU	0
TOTAL Eu	0
TOTAL SOLIDS	0

TOTAL PRECIPITATE	0.0 t/d
TOTAL SOLIDS	0.0 t/d
TOTAL MASS	13.521 t/d
TOTAL VOLUME	13.192 m3/d
DENSITY	1.025 t/m3

STREAM 172 Fresh SL-644 Ion Exchange Resin Feed to Cesium Ion Exchange

MASS:	t/d
Al	0
Ba	0
Ca	0
Cd	0
Cl	0
Cr	0
F	0
Fe	0
Hg	0
K	0
La	0
Ni	0
NO2	0
NO3	0
OH	0
Pb	0
PO4	0
SO4	0
TIC	0
TOC	0
U	0
Na	0
H2O	781.392E-6
Cs	0
Sr	0
Tc	0
NH3	0
TRU	0
Am	0
Pu	0
NO	0
Si	0
B	0
SrCO3	0
MnO4-	0
Am(OH)3	0
O	0
O2	0
Mn	0
Pu(OH)4	0
P2O5	0
SO2	0
CO2	0
I2	0
N2	0
Co	0
Eu	0
Zn	0
Mg	0
Zr	0
Li	0
NO2(g)	0
CsIX	0.122
TcIX	0
Sugar	0
Co(OH)3	0
SO4IX	0
H+	0
(TcO4)-	0
B2O3 (s)	0
MnO2 (s)	0
H2O (s)	0
ZnO (s)	0
Li2O (s)	0
TOC (s)	0
Na2O (s)	0
K2O (s)	0
Al2O3(s)	0
CaO (s)	0
Cr2O3(s)	0
Fe2O3(s)	0
NiO (s)	0
MgO (s)	0
SiO2 (s)	0
ZrO2 (s)	0
BaO (s)	0
Anion(s)	0
La2O3(s)	0
PbO2 (s)	0
UO3 (s)	0

ACTIVITY:	TBq/d
Cs137	0
Sr90	0
Tc99	0
Am241	0
Co60	0
Eu154	0
Eu155	0
Pu238	0
Pu239	0
Pu240	0
Pu241	0
H3	0
C14	0
I129	0
OFP	0
U233	0
U235	0
Cm243+4	0
Np237	0
Sb125	0
Cs137 (s)	0
Sr90 (s)	0
Tc99 (s)	0
Am241 (s)	0
Co60 (s)	0
Eu154 (s)	0
Eu155 (s)	0
Pu238 (s)	0
Pu239 (s)	0
Pu240 (s)	0
Pu241 (s)	0
H3 (s)	0
C14 (s)	0
I129 (s)	0
OFP (s)	0
U233 (s)	0
U235 (s)	0
Cm243+4(s)	0
Np237 (s)	0
Sb125 (s)	0
TOTAL	0
TOTAL TRU	0
TOTAL Eu	0
TOTAL SOLIDS	0

TOTAL PRECIPITATE	0	t/d
TOTAL SOLIDS	0	t/d
TOTAL MASS	0.123	t/d
TOTAL VOLUME	78.296E-3	m3/d
DENSITY	1.574	t/m3

STREAM 174 Spent SL-644 Ion Exchange Resin from Cesium Ion Exchange

MASS:	t/d
Al	0
Ba	0
Ca	0
Cd	0
Cl	0
Cr	0
F	0
Fe	0
Hg	0
K	0
La	0
Ni	0
NO2	0
NO3	0
OH	0
Pb	0
PO4	0
SO4	0
TIC	0
TOC	0
U	0
Na	0
H2O	781.392E-6
Cs	0
Sr	0
Tc	0
NH3	0
TRU	0
Am	0
Pu	0
NO	0
Si	0
B	0
SrCO3	0
MnO4-	0
Am(OH)3	0
O	0
O2	0
Mn	0
Pu(OH)4	0
P2O5	0
SO2	0
CO2	0
I2	0
N2	0
Co	0
Eu	0
Zn	0
Mg	0
Zr	0
Li	0
NO2(g)	0
CsIX	0.122
TcIX	0
Sugar	0
Co(OH)3	0
SO4IX	0
H+	0
(TcO4)-	0
B2O3 (s)	0
MnO2 (s)	0
H2O (s)	0
ZnO (s)	0
Li2O (s)	0
TOC (s)	0
Na2O (s)	0
K2O (s)	0
Al2O3(s)	0
CaO (s)	0
Cr2O3(s)	0
Fe2O3(s)	0
NiO (s)	0
MgO (s)	0
SiO2 (s)	0
ZrO2 (s)	0
BaO (s)	0
Anion(s)	0
La2O3(s)	0
PbO2 (s)	0
UO3 (s)	0

ACTIVITY:	TBq/d
Cs137	0
Sr90	0
Tc99	0
Am241	0
Co60	0
Eu154	0
Eu155	0
Pu238	0
Pu239	0
Pu240	0
Pu241	0
H3	0
C14	0
I129	0
OFP	0
U233	0
U235	0
Cm243+4	0
Np237	0
Sb125	0
Cs137 (s)	0
Sr90 (s)	0
Tc99 (s)	0
Am241 (s)	0
Co60 (s)	0
Eu154 (s)	0
Eu155 (s)	0
Pu238 (s)	0
Pu239 (s)	0
Pu240 (s)	0
Pu241 (s)	0
H3 (s)	0
C14 (s)	0
I129 (s)	0
OFP (s)	0
U233 (s)	0
U235 (s)	0
Cm243+4(s)	0
Np237 (s)	0
Sb125 (s)	0
==========	
TOTAL	0
TOTAL TRU	0
TOTAL Eu	0
TOTAL SOLIDS	0

TOTAL PRECIPITATE	0 t/d
TOTAL SOLIDS	0 t/d
TOTAL MASS	0.123 t/d
TOTAL VOLUME	0.123 m3/d
DENSITY	1.005 t/m3

STREAM 47 Overheads from Cesium HNO_3 Recovery Evaporator

MASS:	t/d
Al	0.0
Ba	0.0
Ca	0.0
Cd	0.0
Cl	0.0
Cr	0.0
F	0.0
Fe	0.0
Hg	0.0
K	1.012E-9
La	0.0
Ni	0.0
NO2	0.0
NO3	0.365
OH	0.0
Pb	0.0
PO4	0.0
SO4	0.0
TIC	0.0
TOC	0.0
U	0.0
Na	21.210E-9
H2O	13.150
Cs	2.150E-9
Sr	0.0
Tc	0.0
NH3	0.0
TRU	0.0
Am	0.0
Pu	0.0
NO	0.0
Si	0.0
B	0.0
SrCO3	0.0
MnO4-	0.0
Am(OH)3	0.0
O	0.0
O2	0.0
Mn	0.0
Pu(OH)4	0.0
P2O5	0.0
SO2	0.0
CO2	0.0
I2	0.0
N2	0.0
Co	0.0
Eu	0.0
Zn	0.0
Mg	0.0
Zr	0.0
Li	0.0
NO2(g)	0.0
CsIX	0.0
TcIX	0.0
Sugar	0.0
Co(OH)3	0.0
SO4IX	0.0
H+	5.891E-3
(TcO4)-	0.0
B2O3 (s)	0.0
MnO2 (s)	0.0
H2O (s)	0.0
ZnO (s)	0.0
Li2O (s)	0.0
TOC (s)	0.0
Na2O (s)	0.0
K2O (s)	0.0
Al2O3(s)	0.0
CaO (s)	0.0
Cr2O3(s)	0.0
Fe2O3(s)	0.0
NiO (s)	0.0
MgO (s)	0.0
SiO2 (s)	0.0
ZrO2 (s)	0.0
BaO (s)	0.0
Anion(s)	0.0
La2O3(s)	0.0
PbO2 (s)	0.0
UO3 (s)	0.0

ACTIVITY:	TBq/d
Cs137	1.720E-3
Sr90	0
Tc99	0
Am241	0
Co60	0
Eu154	0
Eu155	0
Pu238	0
Pu239	0
Pu240	0
Pu241	0
H3	0
C14	0
I129	0
OFP	0
U233	0
U235	0
Cm243+4	0
Np237	0
Sb125	0
Cs137 (s)	0
Sr90 (s)	0
Tc99 (s)	0
Am241 (s)	0
Co60 (s)	0
Eu154 (s)	0
Eu155 (s)	0
Pu238 (s)	0
Pu239 (s)	0
Pu240 (s)	0
Pu241 (s)	0
H3 (s)	0
C14 (s)	0
I129 (s)	0
OFP (s)	0
U233 (s)	0
U235 (s)	0
Cm243+4(s)	0
Np237 (s)	0
Sb125 (s)	0
TOTAL	1.720E-3
TOTAL TRU	0
TOTAL Eu	0
TOTAL SOLIDS	0

TOTAL PRECIPITATE	0.0 t/d
TOTAL SOLIDS	0.0 t/d
TOTAL MASS	13.521 t/d
TOTAL VOLUME	13.494 m3/d
DENSITY	1.002 t/m3

STREAM 48 HNO_3 Recycle from Cesium HNO_3 Recovery Rectifying Column

MASS:	t/d
Al	0.0
Ba	0.0
Ca	0.0
Cd	0.0
Cl	0.0
Cr	0.0
F	0.0
Fe	0.0
Hg	0.0
K	872.120E-12
La	0.0
Ni	0.0
NO2	0.0
NO3	0.365
OH	0.0
Pb	0.0
PO4	0.0
SO4	0.0
TIC	0.0
TOC	0.0
U	0.0
Na	18.303E-9
H2O	11.552
Cs	1.854E-9
Sr	0.0
Tc	0.0
NH3	0.0
TRU	0.0
Am	0.0
Pu	0.0
NO	0.0
Si	0.0
B	0.0
SrCO3	0.0
MnO4-	0.0
Am(OH)3	0.0
O	0.0
O2	0.0
Mn	0.0
Pu(OH)4	0.0
P2O5	0.0
SO2	0.0
CO2	0.0
I2	0.0
N2	0.0
Co	0.0
Eu	0.0
Zn	0.0
Mg	0.0
Zr	0.0
Li	0.0
NO2(g)	0.0
CsIX	0.0
TcIX	0.0
Sugar	0.0
Co(OH)3	0.0
SO4IX	0.0
H+	5.885E-3
(TcO4)-	0.0
B2O3 (s)	0.0
MnO2 (s)	0.0
H2O (s)	0.0
ZnO (s)	0.0
Li2O (s)	0.0
TOC (s)	0.0
Na2O (s)	0.0
K2O (s)	0.0
Al2O3(s)	0.0
CaO (s)	0.0
Cr2O3(s)	0.0
Fe2O3(s)	0.0
NiO (s)	0.0
MgO (s)	0.0
SiO2 (s)	0.0
ZrO2 (s)	0.0
BaO (s)	0.0
Anion(s)	0.0
La2O3(s)	0.0
PbO2 (s)	0.0
UO3 (s)	0.0

ACTIVITY:	TBq/d
Cs137	1.485E-3
Sr90	0
Tc99	0
Am241	0
Co60	0
Eu154	0
Eu155	0
Pu238	0
Pu239	0
Pu240	0
Pu241	0
H3	0
C14	0
I129	0
OFP	0
U233	0
U235	0
Cm243+4	0
Np237	0
Sb125	0
Cs137 (s)	0
Sr90 (s)	0
Tc99 (s)	0
Am241 (s)	0
Co60 (s)	0
Eu154 (s)	0
Eu155 (s)	0
Pu238 (s)	0
Pu239 (s)	0
Pu240 (s)	0
Pu241 (s)	0
H3 (s)	0
C14 (s)	0
I129 (s)	0
OFP (s)	0
U233 (s)	0
U235 (s)	0
Cm243+4(s)	0
Np237 (s)	0
Sb125 (s)	0
==========	
TOTAL	1.485E-3
TOTAL TRU	0
TOTAL Eu	0
TOTAL SOLIDS	0

TOTAL PRECIPITATE	0.0 t/d
TOTAL SOLIDS	0.0 t/d
TOTAL MASS	11.923 t/d
TOTAL VOLUME	11.770 m3/d
DENSITY	1.013 t/m3

STREAM 49 Overheads from Cesium HNO_3 Recovery Rectifying Column

	MASS: t/d
Al	0.0
Ba	0.0
Ca	0.0
Cd	0.0
Cl	0.0
Cr	0.0
F	0.0
Fe	0.0
Hg	0.0
K	140.019E-12
La	0.0
Ni	0.0
NO2	0.0
NO3	365.238E-6
OH	0.0
Pb	0.0
PO4	0.0
SO4	0.0
TIC	0.0
TOC	0.0
U	0.0
Na	2.907E-9
H2O	1.598
Cs	295.911E-12
Sr	0.0
Tc	0.0
NH3	0.0
TRU	0.0
Am	0.0
Pu	0.0
NO	0.0
Si	0.0
B	0.0
SrCO3	0.0
MnO4-	0.0
Am(OH)3	0.0
O	0.0
O2	0.0
Mn	0.0
Pu(OH)4	0.0
P2O5	0.0
SO2	0.0
CO2	0.0
I2	0.0
N2	0.0
Co	0.0
Eu	0.0
Zn	0.0
Mg	0.0
Zr	0.0
Li	0.0
NO2(g)	0.0
CsIX	0.0
TcIX	0.0
Sugar	0.0
Co(OH)3	0.0
SO4IX	0
H+	5.891E-6
(TcO4)-	0.0
B2O3 (s)	0.0
MnO2 (s)	0.0
H2O (s)	0.0
ZnO (s)	0.0
Li2O (s)	0.0
TOC (s)	0.0
Na2O (s)	0.0
K2O (s)	0.0
Al2O3(s)	0.0
CaO (s)	0.0
Cr2O3(s)	0.0
Fe2O3(s)	0.0
NiO (s)	0.0
MgO (s)	0.0
SiO2 (s)	0.0
ZrO2 (s)	0.0
BaO (s)	0.0
Anion(s)	0.0
La2O3(s)	0.0
PbO2 (s)	0.0
UO3 (s)	0.0

	ACTIVITY: TBq/d
Cs137	235.653E-6
Sr90	0
Tc99	0
Am241	0
Co60	0
Eu154	0
Eu155	0
Pu238	0
Pu239	0
Pu240	0
Pu241	0
H3	0
C14	0
I129	0
OFP	0
U233	0
U235	0
Cm243+4	0
Np237	0
Sb125	0
Cs137 (s)	0
Sr90 (s)	0
Tc99 (s)	0
Am241 (s)	0
Co60 (s)	0
Eu154 (s)	0
Eu155 (s)	0
Pu238 (s)	0
Pu239 (s)	0
Pu240 (s)	0
Pu241 (s)	0
H3 (s)	0
C14 (s)	0
I129 (s)	0
OFP (s)	0
U233 (s)	0
U235 (s)	0
Cm243+4(s)	0
Np237 (s)	0
Sb125 (s)	0
==========	
TOTAL	235.653E-6
TOTAL TRU	0
TOTAL Eu	0
TOTAL SOLIDS	0

TOTAL PRECIPITATE	0.0 t/d
TOTAL SOLIDS	0.0 t/d
TOTAL MASS	1.598 t/d
TOTAL VOLUME	1.614 m3/d
DENSITY	0.990 t/m3

STREAM 50 0.5M HNO_3 Cesium Ion Exchange Eluant Make-Up

MASS:	t/d
Al	0
Ba	0
Ca	0
Cd	0
Cl	0
Cr	0
F	0
Fe	0
Hg	0
K	0
La	0
Ni	0
NO2	0
NO3	365.238E-6
OH	0
Pb	0
PO4	0
SO4	0
TIC	0
TOC	0
U	0
Na	0
H2O	11.564E-3
Cs	0
Sr	0
Tc	0
NH3	0
TRU	0
Am	0
Pu	0
NO	0
Si	0
B	0
SrCO3	0
MnO4-	0
Am(OH)3	0
O	0
O2	0
Mn	0
Pu(OH)4	0
P2O5	0
SO2	0
CO2	0
I2	0
N2	0
Co	0
Eu	0
Zn	0
Mg	0
Zr	0
Li	0
NO2(g)	0
CsIX	0
TcIX	0
Sugar	0
Co(OH)3	0
SO4IX	0
H+	5.891E-6
(TcO4)-	0
B2O3 (s)	0
MnO2 (s)	0
H2O (s)	0
ZnO (s)	0
Li2O (s)	0
TOC (s)	0
Na2O (s)	0
K2O (s)	0
Al2O3(s)	0
CaO (s)	0
Cr2O3(s)	0
Fe2O3(s)	0
NiO (s)	0
MgO (s)	0
SiO2 (s)	0
ZrO2 (s)	0
BaO (s)	0
Anion(s)	0
La2O3(s)	0
PbO2 (s)	0
UO3 (s)	0

ACTIVITY:	TBq/d
Cs137	0
Sr90	0
Tc99	0
Am241	0
Co60	0
Eu154	0
Eu155	0
Pu238	0
Pu239	0
Pu240	0
Pu241	0
H3	0
C14	0
I129	0
OFP	0
U233	0
U235	0
Cm243+4	0
Np237	0
Sb125	0
Cs137 (s)	0
Sr90 (s)	0
Tc99 (s)	0
Am241 (s)	0
Co60 (s)	0
Eu154 (s)	0
Eu155 (s)	0
Pu238 (s)	0
Pu239 (s)	0
Pu240 (s)	0
Pu241 (s)	0
H3 (s)	0
C14 (s)	0
I129 (s)	0
OFP (s)	0
U233 (s)	0
U235 (s)	0
Cm243+4(s)	0
Np237 (s)	0
Sb125 (s)	0
==========	
TOTAL	0
TOTAL TRU	0
TOTAL Eu	0
TOTAL SOLIDS	0

TOTAL PRECIPITATE	0	t/d
TOTAL SOLIDS	0	t/d
TOTAL MASS	11.935E-3	t/d
TOTAL VOLUME	11.782E-3	m3/d
DENSITY	1.013	t/m3

STREAM 51 0.5M HNO_3 Cesium Ion Exchange Elution

	MASS: t/d
Al	0.0
Ba	0.0
Ca	0.0
Cd	0.0
Cl	0.0
Cr	0.0
F	0.0
Fe	0.0
Hg	0.0
K	872.120E-12
La	0.0
Ni	0.0
NO2	0.0
NO3	0.365
OH	0.0
Pb	0.0
PO4	0.0
SO4	0.0
TIC	0.0
TOC	0.0
U	0.0
Na	18.303E-9
H2O	11.564
Cs	1.854E-9
Sr	0.0
Tc	0.0
NH3	0.0
TRU	0.0
Am	0.0
Pu	0.0
NO	0.0
Si	0.0
B	0.0
SrCO3	0.0
MnO4-	0.0
Am(OH)3	0.0
O	0.0
O2	0.0
Mn	0.0
Pu(OH)4	0.0
P2O5	0.0
SO2	0.0
CO2	0.0
I2	0.0
N2	0.0
Co	0.0
Eu	0.0
Zn	0.0
Mg	0.0
Zr	0.0
Li	0.0
NO2(g)	0.0
CsIX	0.0
TcIX	0.0
Sugar	0.0
Co(OH)3	0.0
SO4IX	0.0
H+	5.891E-3
(TcO4)-	0.0
B2O3 (s)	0.0
MnO2 (s)	0.0
H2O (s)	0.0
ZnO (s)	0.0
Li2O (s)	0.0
TOC (s)	0.0
Na2O (s)	0.0
K2O (s)	0.0
Al2O3(s)	0.0
CaO (s)	0.0
Cr2O3(s)	0.0
Fe2O3(s)	0.0
NiO (s)	0.0
MgO (s)	0.0
SiO2 (s)	0.0
ZrO2 (s)	0.0
BaO (s)	0.0
Anion(s)	0.0
La2O3(s)	0.0
PbO2 (s)	0.0
UO3 (s)	0.0

	ACTIVITY: TBq/d
Cs137	1.485E-3
Sr90	0
Tc99	0
Am241	0
Co60	0
Eu154	0
Eu155	0
Pu238	0
Pu239	0
Pu240	0
Pu241	0
H3	0
C14	0
I129	0
OFP	0
U233	0
U235	0
Cm243+4	0
Np237	0
Sb125	0
Cs137 (s)	0
Sr90 (s)	0
Tc99 (s)	0
Am241 (s)	0
Co60 (s)	0
Eu154 (s)	0
Eu155 (s)	0
Pu238 (s)	0
Pu239 (s)	0
Pu240 (s)	0
Pu241 (s)	0
H3 (s)	0
C14 (s)	0
I129 (s)	0
OFP (s)	0
U233 (s)	0
U235 (s)	0
Cm243+4(s)	0
Np237 (s)	0
Sb125 (s)	0
TOTAL	1.485E-3
TOTAL TRU	0
TOTAL Eu	0
TOTAL SOLIDS	0

TOTAL PRECIPITATE	0.0 t/d
TOTAL SOLIDS	0.0 t/d
TOTAL MASS	11.935 t/d
TOTAL VOLUME	11.628 m3/d
DENSITY	1.026 t/m3

STREAM 166 H_2O Cesium IX Residual HNO_3 Displacement (Post-Elution)

MASS:	t/d
Al	0
Ba	0
Ca	0
Cd	0
Cl	0
Cr	0
F	0
Fe	0
Hg	0
K	0
La	0
Ni	0
NO2	0
NO3	0
OH	0
Pb	0
PO4	0
SO4	0
TIC	0
TOC	0
U	0
Na	0
H2O	1.547
Cs	0
Sr	0
Tc	0
NH3	0
TRU	0
Am	0
Pu	0
NO	0
Si	0
B	0
SrCO3	0
MnO4-	0
Am(OH)3	0
O	0
O2	0
Mn	0
Pu(OH)4	0
P2O5	0
SO2	0
CO2	0
I2	0
N2	0
Co	0
Eu	0
Zn	0
Mg	0
Zr	0
Li	0
NO2(g)	0
CsIX	0
TcIX	0
Sugar	0
Co(OH)3	0
SO4IX	0
H+	0
(TcO4)-	0
B2O3 (s)	0
MnO2 (s)	0
H2O (s)	0
ZnO (s)	0
Li2O (s)	0
TOC (s)	0
Na2O (s)	0
K2O (s)	0
Al2O3(s)	0
CaO (s)	0
Cr2O3(s)	0
Fe2O3(s)	0
NiO (s)	0
MgO (s)	0
SiO2 (s)	0
ZrO2 (s)	0
BaO (s)	0
Anion(s)	0
La2O3(s)	0
PbO2 (s)	0
UO3 (s)	0

ACTIVITY:	TBq/d
Cs137	0
Sr90	0
Tc99	0
Am241	0
Co60	0
Eu154	0
Eu155	0
Pu238	0
Pu239	0
Pu240	0
Pu241	0
H3	0
C14	0
I129	0
OFP	0
U233	0
U235	0
Cm243+4	0
Np237	0
Sb125	0
Cs137 (s)	0
Sr90 (s)	0
Tc99 (s)	0
Am241 (s)	0
Co60 (s)	0
Eu154 (s)	0
Eu155 (s)	0
Pu238 (s)	0
Pu239 (s)	0
Pu240 (s)	0
Pu241 (s)	0
H3 (s)	0
C14 (s)	0
I129 (s)	0
OFP (s)	0
U233 (s)	0
U235 (s)	0
Cm243+4(s)	0
Np237 (s)	0
Sb125 (s)	0
TOTAL	0
TOTAL TRU	0
TOTAL Eu	0
TOTAL SOLIDS	0

TOTAL PRECIPITATE	0 t/d
TOTAL SOLIDS	0 t/d
TOTAL MASS	1.547 t/d
TOTAL VOLUME	1.550 m3/d
DENSITY	0.998 t/m3

STREAM 52 Fresh 5.0M HNO_3 Feed to Cesium HNO_3 Recovery Evaporator

MASS:	t/d
Al	0
Ba	0
Ca	0
Cd	0
Cl	0
Cr	0
F	0
Fe	0
Hg	0
K	0
La	0
Ni	0
NO2	0
NO3	0.143
OH	0
Pb	0
PO4	0
SO4	0
TIC	0
TOC	0
U	0
Na	0
H2O	0.390
Cs	0
Sr	0
Tc	0
NH3	0
TRU	0
Am	0
Pu	0
NO	0
Si	0
B	0
SrCO3	0
MnO4-	0
Am(OH)3	0
O	0
O2	0
Mn	0
Pu(OH)4	0
P2O5	0
SO2	0
CO2	0
I2	0
N2	0
Co	0
Eu	0
Zn	0
Mg	0
Zr	0
Li	0
NO2(g)	0
CsIX	0
TcIX	0
Sugar	0
Co(OH)3	0
SO4IX	0
H+	2.304E-3
(TcO4)-	0
B2O3 (s)	0
MnO2 (s)	0
H2O (s)	0
ZnO (s)	0
Li2O (s)	0
TOC (s)	0
Na2O (s)	0
K2O (s)	0
Al2O3(s)	0
CaO (s)	0
Cr2O3(s)	0
Fe2O3(s)	0
NiO (s)	0
MgO (s)	0
SiO2 (s)	0
ZrO2 (s)	0
BaO (s)	0
Anion(s)	0
La2O3(s)	0
PbO2 (s)	0
UO3 (s)	0

ACTIVITY:	TBq/d
Cs137	0
Sr90	0
Tc99	0
Am241	0
Co60	0
Eu154	0
Eu155	0
Pu238	0
Pu239	0
Pu240	0
Pu241	0
H3	0
C14	0
I129	0
OFP	0
U233	0
U235	0
Cm243+4	0
Np237	0
Sb125	0
Cs137 (s)	0
Sr90 (s)	0
Tc99 (s)	0
Am241 (s)	0
Co60 (s)	0
Eu154 (s)	0
Eu155 (s)	0
Pu238 (s)	0
Pu239 (s)	0
Pu240 (s)	0
Pu241 (s)	0
H3 (s)	0
C14 (s)	0
I129 (s)	0
OFP (s)	0
U233 (s)	0
U235 (s)	0
Cm243+4(s)	0
Np237 (s)	0
Sb125 (s)	0
TOTAL	0
TOTAL TRU	0
TOTAL Eu	0
TOTAL SOLIDS	0

TOTAL PRECIPITATE	0 t/d
TOTAL SOLIDS	0 t/d
TOTAL MASS	0.535 t/d
TOTAL VOLUME	0.461 m3/d
DENSITY	1.161 t/m3

STREAM 17 Concentrated Cesium LAW Intermediate Product

MASS:	t/d
Al	0.0
Ba	0.0
Ca	0.0
Cd	0.0
Cl	0.0
Cr	0.0
F	0.0
Fe	0.0
Hg	0.0
K	1.012E-3
La	0.0
Ni	0.0
NO2	0.0
NO3	0.143
OH	0.0
Pb	0.0
PO4	0.0
SO4	0.0
TIC	0.0
TOC	0.0
U	0.0
Na	21.210E-3
H2O	0.366
Cs	2.150E-3
Sr	0.0
Tc	0.0
NH3	0.0
TRU	0.0
Am	0.0
Pu	0.0
NO	0.0
Si	0.0
B	0.0
SrCO3	0.0
MnO4-	0.0
Am(OH)3	0.0
O	0.0
O2	0.0
Mn	0.0
Pu(OH)4	0.0
P2O5	0.0
SO2	0.0
CO2	0.0
I2	0.0
N2	0.0
Co	0.0
Eu	0.0
Zn	0.0
Mg	0.0
Zr	0.0
Li	0.0
NO2(g)	0.0
CsIX	0.0
TcIX	0.0
Sugar	0.0
Co(OH)3	0.0
SO4IX	0
H+	1.340E-3
(TcO4)-	0.0
B2O3 (s)	0.0
MnO2 (s)	0.0
H2O (s)	0.0
ZnO (s)	0.0
Li2O (s)	0.0
TOC (s)	0.0
Na2O (s)	0.0
K2O (s)	0.0
Al2O3(s)	0.0
CaO (s)	0.0
Cr2O3(s)	0.0
Fe2O3(s)	0.0
NiO (s)	0.0
MgO (s)	0.0
SiO2 (s)	0.0
ZrO2 (s)	0.0
BaO (s)	0.0
Anion(s)	0.0
La2O3(s)	0.0
PbO2 (s)	0.0
UO3 (s)	0.0

ACTIVITY:	TBq/d
Cs137	1.720E3
Sr90	0
Tc99	0
Am241	0
Co60	0
Eu154	0
Eu155	0
Pu238	0
Pu239	0
Pu240	0
Pu241	0
H3	0
C14	0
I129	0
OFP	0
U233	0
U235	0
Cm243+4	0
Np237	0
Sb125	0
Cs137 (s)	0
Sr90 (s)	0
Tc99 (s)	0
Am241 (s)	0
Co60 (s)	0
Eu154 (s)	0
Eu155 (s)	0
Pu238 (s)	0
Pu239 (s)	0
Pu240 (s)	0
Pu241 (s)	0
H3 (s)	0
C14 (s)	0
I129 (s)	0
OFP (s)	0
U233 (s)	0
U235 (s)	0
Cm243+4(s)	0
Np237 (s)	0
Sb125 (s)	0
==========	==========
TOTAL	1.720E3
TOTAL TRU	0
TOTAL Eu	0
TOTAL SOLIDS	0

TOTAL PRECIPITATE	0.0 t/d
TOTAL SOLIDS	0.0 t/d
TOTAL MASS	0.535 t/d
TOTAL VOLUME	0.351 m3/d
DENSITY	1.526 t/m3

STREAM 168 Feed from Pretreatment Vessel Vents

MASS:	t/d	ACTIVITY:	TBq/d
Al	0	Cs137	99.840E-3
Ba	0	Sr90	99.840E-6
Ca	0	Tc99	998.400E-9
Cd	0	Am241	720.000E-9
Cl	0	Co60	0
Cr	0	Eu154	0
F	0	Eu155	0
Fe	0	Pu238	0
Hg	0	Pu239	230.000E-9
K	0	Pu240	49.900E-9
La	0	Pu241	0
Ni	0	H3	0
NO2	0	C14	0
NO3	0	I129	0
OH	0	OFP	0
Pb	0	U233	0
PO4	0	U235	0
SO4	0	Cm243+4	0
TIC	0	Np237	0
TOC	0	Sb125	0
U	0	Cs137 (s)	0
Na	0	Sr90 (s)	0
H2O	6.862	Tc99 (s)	0
Cs	31.200E-9	Am241 (s)	0
Sr	0.0	Co60 (s)	0
Tc	1.560E-9	Eu154 (s)	0
NH3	0	Eu155 (s)	0
TRU	0.0	Pu238 (s)	0
Am	0.0	Pu239 (s)	0
Pu	105.940E-12	Pu240 (s)	0
NO	0	Pu241 (s)	0
Si	0	H3 (s)	0
B	0	C14 (s)	0
SrCO3	0	I129 (s)	0
MnO4-	0	OFP (s)	0
Am(OH)3	0	U233 (s)	0
O	0	U235 (s)	0
O2	62.122	Cm243+4(s)	0
Mn	0	Np237 (s)	0
Pu(OH)4	0	Sb125 (s)	0
P2O5	0		==========
SO2	0	TOTAL	99.942E-3
CO2	0.140	TOTAL TRU	999.900E-9
I2	0	TOTAL Eu	0
N2	217.428	TOTAL SOLIDS	0
Co	0		
Eu	0		
Zn	0		
Mg	0		
Zr	0		
Li	0		
NO2(g)	0		
CsIX	0		
TcIX	0		
Sugar	0		
Co(OH)3	0		
SO4IX	0		
H+	0		
(TcO4)-	0		
B2O3 (s)	0		
MnO2 (s)	0		
H2O (s)	0		
ZnO (s)	0		
Li2O (s)	0		
TOC (s)	0		
Na2O (s)	0		
K2O (s)	0		
Al2O3(s)	0		
CaO (s)	0		
Cr2O3(s)	0		
Fe2O3(s)	0		
NiO (s)	0		
MgO (s)	0		
SiO2 (s)	0		
ZrO2 (s)	0		
BaO (s)	0	TOTAL PRECIPITATE	0 t/d
Anion(s)	0	TOTAL SOLIDS	0 t/d
La2O3(s)	0	TOTAL MASS	286.551 t/d
PbO2 (s)	0	TOTAL VOLUME	252.934E3 m3/d
UO3 (s)	0	DENSITY	1.133E-3 t/m3

STREAM 226 Vessel Vents Scrubber Condensate to LAW Pretreatment

MASS:	t/d
Al	0
Ba	0
Ca	0
Cd	0
Cl	0
Cr	0
F	0
Fe	0
Hg	0
K	0
La	0
Ni	0
NO2	0
NO3	0
OH	0
Pb	0
PO4	0
SO4	0
TIC	0
TOC	0
U	0
Na	0
H2O	2.734
Cs	15.600E-9
Sr	0.0
Tc	780.000E-12
NH3	0
TRU	0.0
Am	0.0
Pu	0.0
NO	0
Si	0
B	0
SrCO3	0
MnO4-	0
Am(OH)3	0
O	0
O2	0
Mn	0
Pu(OH)4	0
P2O5	0
SO2	0
CO2	0
I2	0
N2	0
Co	0
Eu	0
Zn	0
Mg	0
Zr	0
Li	0
NO2(g)	0
CsIX	0
TcIX	0
Sugar	0
Co(OH)3	0
SO4IX	0
H+	0
(TcO4)-	0
B2O3 (s)	0
MnO2 (s)	0
H2O (s)	0
ZnO (s)	0
Li2O (s)	0
TOC (s)	0
Na2O (s)	0
K2O (s)	0
Al2O3(s)	0
CaO (s)	0
Cr2O3(s)	0
Fe2O3(s)	0
NiO (s)	0
MgO (s)	0
SiO2 (s)	0
ZrO2 (s)	0
BaO (s)	0
Anion(s)	0
La2O3(s)	0
PbO2 (s)	0
UO3 (s)	0

ACTIVITY:	TBq/d
Cs137	49.920E-3
Sr90	49.920E-6
Tc99	499.200E-9
Am241	360.000E-9
Co60	0
Eu154	0
Eu155	0
Pu238	0
Pu239	115.000E-9
Pu240	24.950E-9
Pu241	0
H3	0
C14	0
I129	0
OFP	0
U233	0
U235	0
Cm243+4	0
Np237	0
Sb125	0
Cs137 (s)	0
Sr90 (s)	0
Tc99 (s)	0
Am241 (s)	0
Co60 (s)	0
Eu154 (s)	0
Eu155 (s)	0
Pu238 (s)	0
Pu239 (s)	0
Pu240 (s)	0
Pu241 (s)	0
H3 (s)	0
C14 (s)	0
I129 (s)	0
OFP (s)	0
U233 (s)	0
U235 (s)	0
Cm243+4(s)	0
Np237 (s)	0
Sb125 (s)	0
==========	
TOTAL	49.971E-3
TOTAL TRU	499.950E-9
TOTAL Eu	0
TOTAL SOLIDS	0

TOTAL PRECIPITATE	0 t/d
TOTAL SOLIDS	0 t/d
TOTAL MASS	2.734 t/d
TOTAL VOLUME	2.757 m3/d
DENSITY	0.992 t/m3

STREAM 227 Vessel Vents Scrubber Offgas to Vessel Vents HEME

MASS:	t/d
Al	0
Ba	0
Ca	0
Cd	0
Cl	0
Cr	0
F	0
Fe	0
Hg	0
K	0
La	0
Ni	0
NO2	0
NO3	0
OH	0
Pb	0
PO4	0
SO4	0
TIC	0
TOC	0
U	0
Na	0
H2O	4.127
Cs	15.600E-9
Sr	0.0
Tc	780.000E-12
NH3	0
TRU	0.0
Am	0.0
Pu	0.0
NO	0
Si	0
B	0
SrCO3	0
MnO4-	0
Am(OH)3	0
O	0
O2	62.122
Mn	0
Pu(OH)4	0
P2O5	0
SO2	0
CO2	0.140
I2	0
N2	217.428
Co	0
Eu	0
Zn	0
Mg	0
Zr	0
Li	0
NO2(g)	0
CsIX	0
TcIX	0
Sugar	0
Co(OH)3	0
SO4IX	0
H+	0
(TcO4)-	0
B2O3 (s)	0
MnO2 (s)	0
H2O (s)	0
ZnO (s)	0
Li2O (s)	0
TOC (s)	0
Na2O (s)	0
K2O (s)	0
Al2O3(s)	0
CaO (s)	0
Cr2O3(s)	0
Fe2O3(s)	0
NiO (s)	0
MgO (s)	0
SiO2 (s)	0
ZrO2 (s)	0
BaO (s)	0
Anion(s)	0
La2O3(s)	0
PbO2 (s)	0
UO3 (s)	0

ACTIVITY:	TBq/d
Cs137	49.920E-3
Sr90	49.920E-6
Tc99	499.200E-9
Am241	360.000E-9
Co60	0
Eu154	0
Eu155	0
Pu238	0
Pu239	115.000E-9
Pu240	24.950E-9
Pu241	0
H3	0
C14	0
I129	0
OFP	0
U233	0
U235	0
Cm243+4	0
Np237	0
Sb125	0
Cs137 (s)	0
Sr90 (s)	0
Tc99 (s)	0
Am241 (s)	0
Co60 (s)	0
Eu154 (s)	0
Eu155 (s)	0
Pu238 (s)	0
Pu239 (s)	0
Pu240 (s)	0
Pu241 (s)	0
H3 (s)	0
C14 (s)	0
I129 (s)	0
OFP (s)	0
U233 (s)	0
U235 (s)	0
Cm243+4(s)	0
Np237 (s)	0
Sb125 (s)	0
==========	
TOTAL	49.971E-3
TOTAL TRU	499.950E-9
TOTAL Eu	0
TOTAL SOLIDS	0

TOTAL PRECIPITATE	0	t/d
TOTAL SOLIDS	0	t/d
TOTAL MASS	283.817	t/d
TOTAL VOLUME	263.480E3	m3/d
DENSITY	1.077E-3	t/m3

STREAM 140 Vessel Vents HEME Condensate to LAW Pretreatment

MASS:	t/d
Al	0.0
Ba	0.0
Ca	0.0
Cd	0.0
Cl	0.0
Cr	0.0
F	0.0
Fe	0.0
Hg	0
K	0.0
La	0.0
Ni	0.0
NO2	0.0
NO3	0.0
OH	0.0
Pb	0.0
PO4	0.0
SO4	0.0
TIC	0.0
TOC	0.0
U	0.0
Na	0.0
H2O	50.000E-3
Cs	15.454E-9
Sr	0.0
Tc	774.200E-12
NH3	0
TRU	0.0
Am	0.0
Pu	0.0
NO	0
Si	0.0
B	0.0
SrCO3	0.0
MnO4-	0.0
Am(OH)3	0.0
O	0.0
O2	0
Mn	0.0
Pu(OH)4	0.0
P2O5	0.0
SO2	0.0
CO2	0
I2	0
N2	0
Co	0.0
Eu	0.0
Zn	0.0
Mg	0.0
Zr	0.0
Li	0.0
NO2(g)	0
CsIX	0.0
TcIX	0.0
Sugar	0.0
Co(OH)3	0.0
SO4IX	0.0
H+	0.0
(TcO4)-	0.0
B2O3 (s)	0.0
MnO2 (s)	0.0
H2O (s)	0.0
ZnO (s)	0.0
Li2O (s)	0.0
TOC (s)	0.0
Na2O (s)	0.0
K2O (s)	0.0
Al2O3(s)	0.0
CaO (s)	0.0
Cr2O3(s)	0.0
Fe2O3(s)	0.0
NiO (s)	0.0
MgO (s)	0.0
SiO2 (s)	0.0
ZrO2 (s)	0.0
BaO (s)	0.0
Anion(s)	0.0
La2O3(s)	0.0
PbO2 (s)	0.0
UO3 (s)	0.0

ACTIVITY:	TBq/d
Cs137	49.421E-3
Sr90	49.421E-6
Tc99	498.998E-9
Am241	356.400E-9
Co60	0
Eu154	0
Eu155	0
Pu238	0
Pu239	113.850E-9
Pu240	24.700E-9
Pu241	0
H3	0
C14	0
I129	0
OFP	0
U233	0
U235	0
Cm243+4	0
Np237	0
Sb125	0
Cs137 (s)	0
Sr90 (s)	0
Tc99 (s)	0
Am241 (s)	0
Co60 (s)	0
Eu154 (s)	0
Eu155 (s)	0
Pu238 (s)	0
Pu239 (s)	0
Pu240 (s)	0
Pu241 (s)	0
H3 (s)	0
C14 (s)	0
I129 (s)	0
OFP (s)	0
U233 (s)	0
U235 (s)	0
Cm243+4(s)	0
Np237 (s)	0
Sb125 (s)	0
==========	
TOTAL	49.471E-3
TOTAL TRU	494.950E-9
TOTAL Eu	0
TOTAL SOLIDS	0

TOTAL PRECIPITATE	0.0 t/d
TOTAL SOLIDS	0.0 t/d
TOTAL MASS	50.000E-3 t/d
TOTAL VOLUME	50.416E-3 m3/d
DENSITY	0.992 t/m3

STREAM 139 Vessel Vents HEME Offgas to Vessel Vents VOC

MASS:	t/d
Al	0.0
Ba	0.0
Ca	0.0
Cd	0.0
Cl	0.0
Cr	0.0
F	0.0
Fe	0.0
Hg	0
K	0.0
La	0.0
Ni	0.0
NO2	0.0
NO3	0.0
OH	0.0
Pb	0.0
PO4	0.0
SO4	0.0
TIC	0.0
TOC	0.0
U	0.0
Na	0.0
H2O	4.077
Cs	146.100E-12
Sr	0.0
Tc	0.0
NH3	0
TRU	0.0
Am	0.0
Pu	0.0
NO	0
Si	0.0
B	0.0
SrCO3	0.0
MnO4-	0.0
Am(OH)3	0.0
O	0.0
O2	62.122
Mn	0.0
Pu(OH)4	0.0
P2O5	0.0
SO2	0.0
CO2	0.140
I2	0
N2	217.428
Co	0.0
Eu	0.0
Zn	0.0
Mg	0.0
Zr	0.0
Li	0.0
NO2(g)	0
CsIX	0.0
TcIX	0.0
Sugar	0.0
Co(OH)3	0.0
SO4IX	0.0
H+	0.0
(TcO4)-	0.0
B2O3 (s)	0.0
MnO2 (s)	0.0
H2O (s)	0.0
ZnO (s)	0.0
Li2O (s)	0.0
TOC (s)	0.0
Na2O (s)	0.0
K2O (s)	0.0
Al2O3(s)	0.0
CaO (s)	0.0
Cr2O3(s)	0.0
Fe2O3(s)	0.0
NiO (s)	0.0
MgO (s)	0.0
SiO2 (s)	0.0
ZrO2 (s)	0.0
BaO (s)	0.0
Anion(s)	0.0
La2O3(s)	0.0
PbO2 (s)	0.0
UO3 (s)	0.0

ACTIVITY:	TBq/d
Cs137	499.200E-6
Sr90	499.200E-9
Tc99	202.330E-12
Am241	3.600E-9
Co60	0
Eu154	0
Eu155	0
Pu238	0
Pu239	1.150E-9
Pu240	249.500E-12
Pu241	0
H3	0
C14	0
I129	0
OFP	0
U233	0
U235	0
Cm243+4	0
Np237	0
Sb125	0
Cs137 (s)	0
Sr90 (s)	0
Tc99 (s)	0
Am241 (s)	0
Co60 (s)	0
Eu154 (s)	0
Eu155 (s)	0
Pu238 (s)	0
Pu239 (s)	0
Pu240 (s)	0
Pu241 (s)	0
H3 (s)	0
C14 (s)	0
I129 (s)	0
OFP (s)	0
U233 (s)	0
U235 (s)	0
Cm243+4(s)	0
Np237 (s)	0
Sb125 (s)	0
TOTAL	499.704E-6
TOTAL TRU	4.999E-9
TOTAL Eu	0
TOTAL SOLIDS	0

TOTAL PRECIPITATE	0.0	t/d
TOTAL SOLIDS	0.0	t/d
TOTAL MASS	283.767	t/d
TOTAL VOLUME	235.699E3	m3/d
DENSITY	1.204E-3	t/m3

STREAM 6 Feed From Cesium Ion Exchange to Technetium Ion Exchange

MASS:	t/d
Al	1.099
Ba	58.806E-9
Ca	604.269E-6
Cd	82.208E-9
Cl	0.192
Cr	7.789E-3
F	38.566E-3
Fe	2.115E-3
Hg	0.0
K	1.275
La	63.895E-6
Ni	775.839E-6
NO2	3.641
NO3	6.265
OH	2.485
Pb	3.662E-3
PO4	68.605E-3
SO4	58.984E-3
TIC	0.670
TOC	60.892E-3
U	121.068E-6
Na	8.903
H2O	70.743
Cs	314.244E-9
Sr	127.859E-6
Tc	215.069E-6
NH3	0.507
TRU	247.180E-6
Am	526.913E-9
Pu	37.028E-6
NO	0.0
Si	14.249E-3
B	2.712E-3
SrCO3	0.0
MnO4-	0.0
Am(OH)3	0.0
O	12.430E-3
O2	0.0
Mn	4.287E-3
Pu(OH)4	0.0
P2O5	551.940E-12
SO2	2.210E-9
CO2	0.0
I2	2.054E-3
N2	0.0
Co	572.533E-12
Eu	37.362E-9
Zn	8.562E-3
Mg	1.353E-3
Zr	1.907E-3
Li	730.432E-6
NO2(g)	2.583E-6
CsIX	0.0
TcIX	0.0
Sugar	0.0
Co(OH)3	0.0
SO4IX	0.0
H+	49.086E-9
(TcO4)-	9.992E-3
B2O3 (s)	0.0
MnO2 (s)	12.372E-9
H2O (s)	0.0
ZnO (s)	109.415E-12
Li2O (s)	0.0
TOC (s)	444.227E-9
Na2O (s)	976.348E-9
K2O (s)	117.494E-9
Al2O3(s)	155.433E-9
CaO (s)	9.210E-9
Cr2O3(s)	13.404E-9
Fe2O3(s)	11.413E-9
NiO (s)	1.552E-9
MgO (s)	2.954E-9
SiO2 (s)	27.099E-9
ZrO2 (s)	2.710E-9
BaO (s)	164.122E-12
Anion(s)	11.385E-9
La2O3(s)	183.418E-12
PbO2 (s)	729.928E-12
UO3 (s)	36.821E-9

ACTIVITY:	TBq/d
Cs137	0.251
Sr90	17.028
Tc99	3.991
Am241	68.497E-3
Co60	23.582E-3
Eu154	0.232
Eu155	0.232
Pu238	11.106E-3
Pu239	78.558E-3
Pu240	21.981E-3
Pu241	0.886
H3	0.0
C14	0
I129	2.670E-3
OFP	12.770E-3
U233	692.698E-6
U235	15.054E-6
Cm243+4	0.0
Np237	5.456E-3
Sb125	0.363
Cs137 (s)	42.016E-6
Sr90 (s)	33.369E-6
Tc99 (s)	77.423E-9
Am241 (s)	57.909E-9
Co60 (s)	373.503E-12
Eu154 (s)	1.942E-9
Eu155 (s)	1.083E-9
Pu238 (s)	8.844E-9
Pu239 (s)	43.411E-9
Pu240 (s)	12.106E-9
Pu241 (s)	487.173E-9
H3 (s)	0.0
C14 (s)	0.0
I129 (s)	0.0
OFP (s)	0.0
U233 (s)	0.0
U235 (s)	0.0
Cm243+4(s)	2.077E-9
Np237 (s)	0.0
Sb125 (s)	1.195E-9
==========	==========
TOTAL	23.210
TOTAL TRU	0.186
TOTAL Eu	0.464
TOTAL SOLIDS	76.078E-6

TOTAL PRECIPITATE	0.0	t/d
TOTAL SOLIDS	1.824E-6	t/d
TOTAL MASS	96.081	t/d
TOTAL VOLUME	79.415	m3/d
DENSITY	1.210	t/m3

STREAM 71 0.25M NaOH Technetium Ion Exchange Residual Feed Displacement

MASS:	t/d
Al	0
Ba	0
Ca	0
Cd	0
Cl	0
Cr	0
F	0
Fe	0
Hg	0
K	0
La	0
Ni	0
NO2	0
NO3	0
OH	560.084E-6
Pb	0
PO4	0
SO4	0
TIC	0
TOC	0
U	0
Na	757.760E-6
H2O	0.132
Cs	0
Sr	0
Tc	0
NH3	0
TRU	0
Am	0
Pu	0
NO	0
Si	0
B	0
SrCO3	0
MnO4-	0
Am(OH)3	0
O	0
O2	0
Mn	0
Pu(OH)4	0
P2O5	0
SO2	0
CO2	0
I2	0
N2	0
Co	0
Eu	0
Zn	0
Mg	0
Zr	0
Li	0
NO2(g)	0
CsIX	0
TcIX	0
Sugar	0
Co(OH)3	0
SO4IX	0
H+	0
(TcO4)-	0
B2O3 (s)	0
MnO2 (s)	0
H2O (s)	0
ZnO (s)	0
Li2O (s)	0
TOC (s)	0
Na2O (s)	0
K2O (s)	0
Al2O3(s)	0
CaO (s)	0
Cr2O3(s)	0
Fe2O3(s)	0
NiO (s)	0
MgO (s)	0
SiO2 (s)	0
ZrO2 (s)	0
BaO (s)	0
Anion(s)	0
La2O3(s)	0
PbO2 (s)	0
UO3 (s)	0

ACTIVITY:	TBq/d
Cs137	0
Sr90	0
Tc99	0
Am241	0
Co60	0
Eu154	0
Eu155	0
Pu238	0
Pu239	0
Pu240	0
Pu241	0
H3	0
C14	0
I129	0
OFP	0
U233	0
U235	0
Cm243+4	0
Np237	0
Sb125	0
Cs137 (s)	0
Sr90 (s)	0
Tc99 (s)	0
Am241 (s)	0
Co60 (s)	0
Eu154 (s)	0
Eu155 (s)	0
Pu238 (s)	0
Pu239 (s)	0
Pu240 (s)	0
Pu241 (s)	0
H3 (s)	0
C14 (s)	0
I129 (s)	0
OFP (s)	0
U233 (s)	0
U235 (s)	0
Cm243+4(s)	0
Np237 (s)	0
Sb125 (s)	0
==========	
TOTAL	0
TOTAL TRU	0
TOTAL Eu	0
TOTAL SOLIDS	0

TOTAL PRECIPITATE	0 t/d
TOTAL SOLIDS	0 t/d
TOTAL MASS	0.133 t/d
TOTAL VOLUME	0.132 m3/d
DENSITY	1.010 t/m3

STREAM 164 Tc Ion Exchange Pre-Elution Rinse

MASS:	t/d
Al	0
Ba	0
Ca	0
Cd	0
Cl	0
Cr	0
F	0
Fe	0
Hg	0
K	0
La	0
Ni	0
NO2	0
NO3	0
OH	0
Pb	0
PO4	0
SO4	0
TIC	0
TOC	0
U	0
Na	0
H2O	0.790
Cs	0
Sr	0
Tc	0
NH3	0
TRU	0
Am	0
Pu	0
NO	0
Si	0
B	0
SrCO3	0
MnO4-	0
Am(OH)3	0
O	0
O2	0
Mn	0
Pu(OH)4	0
P2O5	0
SO2	0
CO2	0
I2	0
N2	0
Co	0
Eu	0
Zn	0
Mg	0
Zr	0
Li	0
NO2(g)	0
CsIX	0
TcIX	0
Sugar	0
Co(OH)3	0
SO4IX	0
H+	0
(TcO4)-	0
B2O3 (s)	0
MnO2 (s)	0
H2O (s)	0
ZnO (s)	0
Li2O (s)	0
TOC (s)	0
Na2O (s)	0
K2O (s)	0
Al2O3(s)	0
CaO (s)	0
Cr2O3(s)	0
Fe2O3(s)	0
NiO (s)	0
MgO (s)	0
SiO2 (s)	0
ZrO2 (s)	0
BaO (s)	0
Anion(s)	0
La2O3(s)	0
PbO2 (s)	0
UO3 (s)	0

ACTIVITY:	TBq/d
Cs137	0
Sr90	0
Tc99	0
Am241	0
Co60	0
Eu154	0
Eu155	0
Pu238	0
Pu239	0
Pu240	0
Pu241	0
H3	0
C14	0
I129	0
OFP	0
U233	0
U235	0
Cm243+4	0
Np237	0
Sb125	0
Cs137 (s)	0
Sr90 (s)	0
Tc99 (s)	0
Am241 (s)	0
Co60 (s)	0
Eu154 (s)	0
Eu155 (s)	0
Pu238 (s)	0
Pu239 (s)	0
Pu240 (s)	0
Pu241 (s)	0
H3 (s)	0
C14 (s)	0
I129 (s)	0
OFP (s)	0
U233 (s)	0
U235 (s)	0
Cm243+4(s)	0
Np237 (s)	0
Sb125 (s)	0
TOTAL	0
TOTAL TRU	0
TOTAL Eu	0
TOTAL SOLIDS	0

TOTAL PRECIPITATE	0 t/d
TOTAL SOLIDS	0 t/d
TOTAL MASS	0.790 t/d
TOTAL VOLUME	0.792 m3/d
DENSITY	0.998 t/m3

STREAM 165 Technetium IX Pre-Elution Rinse

MASS:	t/d
Al	0
Ba	0
Ca	0
Cd	0
Cl	0
Cr	0
F	0
Fe	0
Hg	0
K	0
La	0
Ni	0
NO2	0
NO3	0
OH	0
Pb	0
PO4	0
SO4	0
TIC	0
TOC	0
U	0
Na	0
H2O	0.790
Cs	0
Sr	0
Tc	0
NH3	0
TRU	0
Am	0
Pu	0
NO	0
Si	0
B	0
SrCO3	0
MnO4-	0
Am(OH)3	0
O	0
O2	0
Mn	0
Pu(OH)4	0
P2O5	0
SO2	0
CO2	0
I2	0
N2	0
Co	0
Eu	0
Zn	0
Mg	0
Zr	0
Li	0
NO2(g)	0
CsIX	0
TcIX	0
Sugar	0
Co(OH)3	0
SO4IX	0
H+	0
(TcO4)-	0
B2O3 (s)	0
MnO2 (s)	0
H2O (s)	0
ZnO (s)	0
Li2O (s)	0
TOC (s)	0
Na2O (s)	0
K2O (s)	0
Al2O3(s)	0
CaO (s)	0
Cr2O3(s)	0
Fe2O3(s)	0
NiO (s)	0
MgO (s)	0
SiO2 (s)	0
ZrO2 (s)	0
BaO (s)	0
Anion(s)	0
La2O3(s)	0
PbO2 (s)	0
UO3 (s)	0

ACTIVITY:	TBq/d
Cs137	0
Sr90	0
Tc99	0
Am241	0
Co60	0
Eu154	0
Eu155	0
Pu238	0
Pu239	0
Pu240	0
Pu241	0
H3	0
C14	0
I129	0
OFP	0
U233	0
U235	0
Cm243+4	0
Np237	0
Sb125	0
Cs137 (s)	0
Sr90 (s)	0
Tc99 (s)	0
Am241 (s)	0
Co60 (s)	0
Eu154 (s)	0
Eu155 (s)	0
Pu238 (s)	0
Pu239 (s)	0
Pu240 (s)	0
Pu241 (s)	0
H3 (s)	0
C14 (s)	0
I129 (s)	0
OFP (s)	0
U233 (s)	0
U235 (s)	0
Cm243+4(s)	0
Np237 (s)	0
Sb125 (s)	0
TOTAL	0
TOTAL TRU	0
TOTAL Eu	0
TOTAL SOLIDS	0

TOTAL PRECIPITATE	0 t/d
TOTAL SOLIDS	0 t/d
TOTAL MASS	0.790 t/d
TOTAL VOLUME	0.792 m3/d
DENSITY	0.998 t/m3

STREAM 62 Recycle to Feed from Technetium Ion Exchange

MASS:	t/d
Al	0
Ba	0
Ca	0
Cd	0
Cl	0
Cr	0
F	0
Fe	0
Hg	0
K	0
La	0
Ni	0
NO2	0
NO3	0
OH	2.243E-3
Pb	0
PO4	0
SO4	0
TIC	0
TOC	0
U	0
Na	3.034E-3
H2O	2.108
Cs	0
Sr	0
Tc	0
NH3	0
TRU	0
Am	0
Pu	0
NO	0
Si	0
B	0
SrCO3	0
MnO4-	0
Am(OH)3	0
O	0
O2	0
Mn	0
Pu(OH)4	0
P2O5	0
SO2	0
CO2	0
I2	0
N2	0
Co	0
Eu	0
Zn	0
Mg	0
Zr	0
Li	0
NO2(g)	0
CsIX	0
TcIX	0
Sugar	0
Co(OH)3	0
SO4IX	0
H+	0
(TcO4)-	0
B2O3 (s)	0
MnO2 (s)	0
H2O (s)	0
ZnO (s)	0
Li2O (s)	0
TOC (s)	0
Na2O (s)	0
K2O (s)	0
Al2O3(s)	0
CaO (s)	0
Cr2O3(s)	0
Fe2O3(s)	0
NiO (s)	0
MgO (s)	0
SiO2 (s)	0
ZrO2 (s)	0
BaO (s)	0
Anion(s)	0
La2O3(s)	0
PbO2 (s)	0
UO3 (s)	0

ACTIVITY:	TBq/d
Cs137	0
Sr90	0
Tc99	0
Am241	0
Co60	0
Eu154	0
Eu155	0
Pu238	0
Pu239	0
Pu240	0
Pu241	0
H3	0
C14	0
I129	0
OFP	0
U233	0
U235	0
Cm243+4	0
Np237	0
Sb125	0
Cs137 (s)	0
Sr90 (s)	0
Tc99 (s)	0
Am241 (s)	0
Co60 (s)	0
Eu154 (s)	0
Eu155 (s)	0
Pu238 (s)	0
Pu239 (s)	0
Pu240 (s)	0
Pu241 (s)	0
H3 (s)	0
C14 (s)	0
I129 (s)	0
OFP (s)	0
U233 (s)	0
U235 (s)	0
Cm243+4(s)	0
Np237 (s)	0
Sb125 (s)	0
==========	
TOTAL	0
TOTAL TRU	0
TOTAL Eu	0
TOTAL SOLIDS	0

TOTAL PRECIPITATE	0 t/d
TOTAL SOLIDS	0 t/d
TOTAL MASS	2.113 t/d
TOTAL VOLUME	2.097 m3/d
DENSITY	1.008 t/m3

STREAM 63 Eluate from Technetium Ion Exchange to Nitric Acid Recovery

MASS:	t/d
Al	0.0
Ba	0.0
Ca	0.0
Cd	0.0
Cl	0.0
Cr	0.0
F	0.0
Fe	0.0
Hg	0.0
K	0.0
La	0.0
Ni	0.0
NO2	0.0
NO3	0.0
OH	0.0
Pb	0.0
PO4	0.0
SO4	0.0
TIC	0.0
TOC	0.0
U	0.0
Na	1.410E-3
H2O	11.917
Cs	0.0
Sr	0.0
Tc	0.0
NH3	0.0
TRU	0.0
Am	0.0
Pu	0.0
NO	0.0
Si	0.0
B	0.0
SrCO3	0.0
MnO4-	0.0
Am(OH)3	0.0
O	0.0
O2	0.0
Mn	0.0
Pu(OH)4	0.0
P2O5	0.0
SO2	0.0
CO2	0.0
I2	0.0
N2	0.0
Co	0.0
Eu	0.0
Zn	0.0
Mg	0.0
Zr	0.0
Li	0.0
NO2(g)	0.0
CsIX	0.0
TcIX	0.0
Sugar	0.0
Co(OH)3	0.0
SO4IX	0.0
H+	0.0
(TcO4)-	9.992E-3
B2O3 (s)	0
MnO2 (s)	0
H2O (s)	0.0
ZnO (s)	0
Li2O (s)	0
TOC (s)	0.0
Na2O (s)	0.0
K2O (s)	0
Al2O3(s)	0
CaO (s)	0
Cr2O3(s)	0.0
Fe2O3(s)	0
NiO (s)	0
MgO (s)	0
SiO2 (s)	0
ZrO2 (s)	0
BaO (s)	0
Anion(s)	0.0
La2O3(s)	0.0
PbO2 (s)	0
UO3 (s)	0

ACTIVITY:	TBq/d
Cs137	0
Sr90	0
Tc99	3.792
Am241	0
Co60	0
Eu154	0
Eu155	0
Pu238	0
Pu239	0
Pu240	0
Pu241	0
H3	0
C14	0
I129	0
OFP	0
U233	0
U235	0
Cm243+4	0
Np237	0
Sb125	0
Cs137 (s)	0
Sr90 (s)	0
Tc99 (s)	0
Am241 (s)	0
Co60 (s)	0
Eu154 (s)	0
Eu155 (s)	0
Pu238 (s)	0
Pu239 (s)	0
Pu240 (s)	0
Pu241 (s)	0
H3 (s)	0
C14 (s)	0
I129 (s)	0
OFP (s)	0
U233 (s)	0
U235 (s)	0
Cm243+4(s)	0
Np237 (s)	0
Sb125 (s)	0
==========	
TOTAL	3.792
TOTAL TRU	0
TOTAL Eu	0
TOTAL SOLIDS	0

TOTAL PRECIPITATE	0.0	t/d
TOTAL SOLIDS	0.0	t/d
TOTAL MASS	11.929	t/d
TOTAL VOLUME	11.861	m3/d
DENSITY	1.006	t/m3

STREAM 173 Fresh SL-639 Ion Exchange Resin Feed to Technetium Ion Exchange

MASS:	t/d
Al	0
Ba	0
Ca	0
Cd	0
Cl	0
Cr	0
F	0
Fe	0
Hg	0
K	0
La	0
Ni	0
NO2	0
NO3	0
OH	0
Pb	0
PO4	0
SO4	0
TIC	0
TOC	0
U	0
Na	0
H2O	799.682E-6
Cs	0
Sr	0
Tc	0
NH3	0
TRU	0
Am	0
Pu	0
NO	0
Si	0
B	0
SrCO3	0
MnO4-	0
Am(OH)3	0
C	0
O2	0
Mn	0
Pu(OH)4	0
P2O5	0
SO2	0
CO2	0
I2	0
N2	0
Co	0
Eu	0
Zn	0
Mg	0
Zr	0
Li	0
NO2(g)	0
CsIX	0
TcIX	93.419E-3
Sugar	0
Co(OH)3	0
SO4IX	0
H+	0
(TcO4)-	0
B2O3 (s)	0
MnO2 (s)	0
H2O (s)	0
ZnO (s)	0
Li2O (s)	0
TOC (s)	0
Na2O (s)	0
K2O (s)	0
Al2O3(s)	0
CaO (s)	0
Cr2O3(s)	0
Fe2O3(s)	0
NiO (s)	0
MgO (s)	0
SiO2 (s)	0
ZrO2 (s)	0
BaO (s)	0
Anion(s)	0
La2O3(s)	0
PbO2 (s)	0
UO3 (s)	0

ACTIVITY:	TBq/d
Cs137	0
Sr90	0
Tc99	0
Am241	0
Co60	0
Eu154	0
Eu155	0
Pu238	0
Pu239	0
Pu240	0
Pu241	0
H3	0
C14	0
I129	0
OFP	0
U233	0
U235	0
Cm243+4	0
Np237	0
Sb125	0
Cs137 (s)	0
Sr90 (s)	0
Tc99 (s)	0
Am241 (s)	0
Co60 (s)	0
Eu154 (s)	0
Eu155 (s)	0
Pu238 (s)	0
Pu239 (s)	0
Pu240 (s)	0
Pu241 (s)	0
H3 (s)	0
C14 (s)	0
I129 (s)	0
OFP (s)	0
U233 (s)	0
U235 (s)	0
Cm243+4(s)	0
Np237 (s)	0
Sb125 (s)	0
TOTAL	0
TOTAL TRU	0
TOTAL Eu	0
TOTAL SOLIDS	0

TOTAL PRECIPITATE	0	t/d
TOTAL SOLIDS	0	t/d
TOTAL MASS	94.218E-3	t/d
TOTAL VOLUME	79.968E-3	m3/d
DENSITY	1.178	t/m3

STREAM 175 Spent SL-639 Ion Exchange Resin from Technetium Ion Exchange

MASS:	t/d
Al	0
Ba	0
Ca	0
Cd	0
Cl	0
Cr	0
F	0
Fe	0
Hg	0
K	0
La	0
Ni	0
NO2	0
NO3	0
OH	0
Pb	0
PO4	0
SO4	0
TIC	0
TOC	0
U	0
Na	0
H2O	799.682E-6
Cs	0
Sr	0
Tc	0
NH3	0
TRU	0
Am	0
Pu	0
NO	0
Si	0
B	0
SrCO3	0
MnO4-	0
Am(OH)3	0
O	0
O2	0
Mn	0
Pu(OH)4	0
P2O5	0
SO2	0
CO2	0
I2	0
N2	0
Co	0
Eu	0
Zn	0
Mg	0
Zr	0
Li	0
NO2(g)	0
CsIX	0
TcIX	93.419E-3
Sugar	0
Co(OH)3	0
SO4IX	0
H+	0
(TcO4)-	0
B2O3 (s)	0
MnO2 (s)	0
H2O (s)	0
ZnO (s)	0
Li2O (s)	0
TOC (s)	0
Na2O (s)	0
K2O (s)	0
Al2O3(s)	0
CaO (s)	0
Cr2O3(s)	0
Fe2O3(s)	0
NiO (s)	0
MgO (s)	0
SiO2 (s)	0
ZrO2 (s)	0
BaO (s)	0
Anion(s)	0
La2O3(s)	0
PbO2 (s)	0
UO3 (s)	0

ACTIVITY:	TBq/d
Cs137	0
Sr90	0
Tc99	0
Am241	0
Co60	0
Eu154	0
Eu155	0
Pu238	0
Pu239	0
Pu240	0
Pu241	0
H3	0
C14	0
I129	0
OFP	0
U233	0
U235	0
Cm243+4	0
Np237	0
Sb125	0
Cs137 (s)	0
Sr90 (s)	0
Tc99 (s)	0
Am241 (s)	0
Co60 (s)	0
Eu154 (s)	0
Eu155 (s)	0
Pu238 (s)	0
Pu239 (s)	0
Pu240 (s)	0
Pu241 (s)	0
H3 (s)	0
C14 (s)	0
I129 (s)	0
OFP (s)	0
U233 (s)	0
U235 (s)	0
Cm243+4(s)	0
Np237 (s)	0
Sb125 (s)	0
==========	
TOTAL	0
TOTAL TRU	0
TOTAL Eu	0
TOTAL SOLIDS	0

TOTAL PRECIPITATE	0	t/d
TOTAL SOLIDS	0	t/d
TOTAL MASS	94.218E-3	t/d
TOTAL VOLUME	93.688E-3	m3/d
DENSITY	1.006	t/m3

STREAM 157 Recovered resin from Cs and Tc Ion Exchange

MASS:	t/d
Al	0
Ba	0
Ca	0
Cd	0
Cl	0
Cr	0
F	0
Fe	0
Hg	0
K	0
La	0
Ni	0
NO2	0
NO3	0
OH	0
Pb	0
PO4	0
SO4	0
TIC	0
TOC	0
U	0
Na	0
H2O	1.581E-3
Cs	0
Sr	0
Tc	0
NH3	0
TRU	0
Am	0
Pu	0
NO	0
Si	0
B	0
SrCO3	0
MnO4-	0
Am(OH)3	0
O	0
O2	0
Mn	0
Pu(OH)4	0
P2O5	0
SO2	0
CO2	0
I2	0
N2	0
Co	0
Eu	0
Zn	0
Mg	0
Zr	0
Li	0
NO2(g)	0
CsIX	0.122
TcIX	93.419E-3
Sugar	0
Co(OH)3	0
SO4IX	0
H+	0
(TcO4)-	0
B2O3 (s)	0
MnO2 (s)	0
H2O (s)	0
ZnO (s)	0
Li2O (s)	0
TOC (s)	0
Na2O (s)	0
K2O (s)	0
Al2O3(s)	0
CaO (s)	0
Cr2O3(s)	0
Fe2O3(s)	0
NiO (s)	0
MgO (s)	0
SiO2 (s)	0
ZrO2 (s)	0
BaO (s)	0
Anion(s)	0
La2O3(s)	0
PbO2 (s)	0
UO3 (s)	0

ACTIVITY:	TBq/d
Cs137	0
Sr90	0
Tc99	0
Am241	0
Co60	0
Eu154	0
Eu155	0
Pu238	0
Pu239	0
Pu240	0
Pu241	0
H3	0
C14	0
I129	0
OFP	0
U233	0
U235	0
Cm243+4	0
Np237	0
Sb125	0
Cs137 (s)	0
Sr90 (s)	0
Tc99 (s)	0
Am241 (s)	0
Co60 (s)	0
Eu154 (s)	0
Eu155 (s)	0
Pu238 (s)	0
Pu239 (s)	0
Pu240 (s)	0
Pu241 (s)	0
H3 (s)	0
C14 (s)	0
I129 (s)	0
OFP (s)	0
U233 (s)	0
U235 (s)	0
Cm243+4(s)	0
Np237 (s)	0
Sb125 (s)	0
==========	
TOTAL	0
TOTAL TRU	0
TOTAL Eu	0
TOTAL SOLIDS	0

TOTAL PRECIPITATE	0 t/d
TOTAL SOLIDS	0 t/d
TOTAL MASS	0.217 t/d
TOTAL VOLUME	0.216 m3/d
DENSITY	1.005 t/m3

STREAM 64 Overheads from Technetium HNO_3 Recovery Evaporator

MASS:	t/d
Al	0.0
Ba	0.0
Ca	0.0
Cd	0.0
Cl	0.0
Cr	0.0
F	0.0
Fe	0.0
Hg	0.0
K	0.0
La	0.0
Ni	0.0
NO2	0.0
NO3	0.0
OH	0.0
Pb	0.0
PO4	0.0
SO4	0.0
TIC	0.0
TOC	0.0
U	0.0
Na	1.410E-9
H2O	11.914
Cs	0.0
Sr	0.0
Tc	0.0
NH3	0.0
TRU	0.0
Am	0.0
Pu	0.0
NO	0.0
Si	0.0
B	0.0
SrCO3	0.0
MnO4-	0.0
Am(OH)3	0.0
O	0.0
O2	0.0
Mn	0.0
Pu(OH)4	0.0
P2O5	0.0
SO2	0.0
CO2	0.0
I2	0.0
N2	0.0
Co	0.0
Eu	0.0
Zn	0.0
Mg	0.0
Zr	0.0
Li	0.0
NO2(g)	0.0
CsIX	0.0
TcIX	0.0
Sugar	0.0
Co(OH)3	0.0
SO4IX	0.0
H+	0.0
(TcO4)-	9.992E-9
B2O3 (s)	0
MnO2 (s)	0
H2O (s)	0.0
ZnO (s)	0
Li2O (s)	0
TOC (s)	0.0
Na2O (s)	0
K2O (s)	0
Al2O3(s)	0
CaO (s)	0
Cr2O3(s)	0.0
Fe2O3(s)	0
NiO (s)	0
MgO (s)	0
SiO2 (s)	0
ZrO2 (s)	0
BaO (s)	0
Anion(s)	0.0
La2O3(s)	0.0
PbO2 (s)	0
UO3 (s)	0

ACTIVITY:	TBq/d
Cs137	0
Sr90	0
Tc99	3.792E-6
Am241	0
Co60	0
Eu154	0
Eu155	0
Pu238	0
Pu239	0
Pu240	0
Pu241	0
H3	0
C14	0
I129	0
OFP	0
U233	0
U235	0
Cm243+4	0
Np237	0
Sb125	0
Cs137 (s)	0
Sr90 (s)	0
Tc99 (s)	0
Am241 (s)	0
Co60 (s)	0
Eu154 (s)	0
Eu155 (s)	0
Pu238 (s)	0
Pu239 (s)	0
Pu240 (s)	0
Pu241 (s)	0
H3 (s)	0
C14 (s)	0
I129 (s)	0
OFP (s)	0
U233 (s)	0
U235 (s)	0
Cm243+4(s)	0
Np237 (s)	0
Sb125 (s)	0
TOTAL	3.792E-6
TOTAL TRU	0
TOTAL Eu	0
TOTAL SOLIDS	0

TOTAL PRECIPITATE	0.0	t/d
TOTAL SOLIDS	0.0	t/d
TOTAL MASS	11.914	t/d
TOTAL VOLUME	11.938	m3/d
DENSITY	0.998	t/m3

STREAM 65 H_2O Recycle from Technetium HNO_3 Recovery Rectifying Column

MASS:	t/d
Al	0.0
Ba	0.0
Ca	0.0
Cd	0.0
Cl	0.0
Cr	0.0
F	0.0
Fe	0.0
Hg	0.0
K	0.0
La	0.0
Ni	0.0
NO2	0.0
NO3	0.0
OH	0.0
Pb	0.0
PO4	0.0
SO4	0.0
TIC	0.0
TOC	0.0
U	0.0
Na	1.215E-9
H2O	10.282
Cs	0.0
Sr	0.0
Tc	0.0
NH3	0.0
TRU	0.0
Am	0.0
Pu	0.0
NO	0.0
Si	0.0
B	0.0
SrCO3	0.0
MnO4-	0.0
Am(OH)3	0.0
O	0.0
O2	0.0
Mn	0.0
Pu(OH)4	0.0
P2O5	0.0
SO2	0.0
CO2	0.0
I2	0.0
N2	0.0
Co	0.0
Eu	0.0
Zn	0.0
Mg	0.0
Zr	0.0
Li	0.0
NO2(g)	0.0
CsIX	0.0
TcIX	0.0
Sugar	0.0
Co(OH)3	0.0
SO4IX	0.0
H+	0.0
(TcO4)-	8.622E-9
B2O3 (s)	0
MnO2 (s)	0
H2O (s)	0.0
ZnO (s)	0
Li2O (s)	0
TOC (s)	0.0
Na2O (s)	0.0
K2O (s)	0
Al2O3(s)	0
CaO (s)	0
Cr2O3(s)	0.0
Fe2O3(s)	0
NiO (s)	0
MgO (s)	0
SiO2 (s)	0
ZrO2 (s)	0
BaO (s)	0
Anion(s)	0.0
La2O3(s)	0.0
PbO2 (s)	0
UO3 (s)	0

ACTIVITY:	TBq/d
Cs137	0
Sr90	0
Tc99	3.271E-6
Am241	0
Co60	0
Eu154	0
Eu155	0
Pu238	0
Pu239	0
Pu240	0
Pu241	0
H3	0
C14	0
I129	0
OFP	0
U233	0
U235	0
Cm243+4	0
Np237	0
Sb125	0
Cs137 (s)	0
Sr90 (s)	0
Tc99 (s)	0
Am241 (s)	0
Co60 (s)	0
Eu154 (s)	0
Eu155 (s)	0
Pu238 (s)	0
Pu239 (s)	0
Pu240 (s)	0
Pu241 (s)	0
H3 (s)	0
C14 (s)	0
I129 (s)	0
OFP (s)	0
U233 (s)	0
U235 (s)	0
Cm243+4(s)	0
Np237 (s)	0
Sb125 (s)	0
TOTAL	3.271E-6
TOTAL TRU	0
TOTAL Eu	0
TOTAL SOLIDS	0

TOTAL PRECIPITATE	0.0	t/d
TOTAL SOLIDS	0.0	t/d
TOTAL MASS	10.282	t/d
TOTAL VOLUME	10.303	m3/d
DENSITY	0.998	t/m3

STREAM 66 Overheads from Technetium HNO_3 Recovery Rectifying Column

MASS:	t/d
Al	0.0
Ba	0.0
Ca	0.0
Cd	0.0
Cl	0.0
Cr	0.0
F	0.0
Fe	0.0
Hg	0.0
K	0.0
La	0.0
Ni	0.0
NO2	0.0
NO3	0.0
OH	0.0
Pb	0.0
PO4	0.0
SO4	0.0
TIC	0.0
TOC	0.0
U	0.0
Na	194.505E-12
H2O	1.632
Cs	0.0
Sr	0.0
Tc	0.0
NH3	0.0
TRU	0.0
Am	0.0
Pu	0.0
NO	0.0
Si	0.0
B	0.0
SrCO3	0.0
MnO4-	0.0
Am(OH)3	0.0
O	0.0
O2	0.0
Mn	0.0
Pu(OH)4	0.0
P2O5	0.0
SO2	0.0
CO2	0.0
I2	0.0
N2	0.0
Co	0.0
Eu	0.0
Zn	0.0
Mg	0.0
Zr	0.0
Li	0.0
NO2(g)	0.0
CsIX	0.0
TcIX	0.0
Sugar	0.0
Co(OH)3	0.0
SO4IX	0.0
H+	0.0
(TcO4)-	1.370E-9
B2O3 (s)	0
MnO2 (s)	0
H2O (s)	0.0
ZnO (s)	0
Li2O (s)	0
TOC (s)	0.0
Na2O (s)	0.0
K2O (s)	0
Al2O3(s)	0
CaO (s)	0
Cr2O3(s)	0.0
Fe2O3(s)	0
NiO (s)	0
MgO (s)	0
SiO2 (s)	0
ZrO2 (s)	0
BaO (s)	0
Anion(s)	0.0
La2O3(s)	0.0
PbO2 (s)	0
UO3 (s)	0

ACTIVITY:	TBq/d
Cs137	0
Sr90	0
Tc99	520.816E-9
Am241	0
Co60	0
Eu154	0
Eu155	0
Pu238	0
Pu239	0
Pu240	0
Pu241	0
H3	0
C14	0
I129	0
OFP	0
U233	0
U235	0
Cm243+4	0
Np237	0
Sb125	0
Cs137 (s)	0
Sr90 (s)	0
Tc99 (s)	0
Am241 (s)	0
Co60 (s)	0
Eu154 (s)	0
Eu155 (s)	0
Pu238 (s)	0
Pu239 (s)	0
Pu240 (s)	0
Pu241 (s)	0
H3 (s)	0
C14 (s)	0
I129 (s)	0
OFP (s)	0
U233 (s)	0
U235 (s)	0
Cm243+4(s)	0
Np237 (s)	0
Sb125 (s)	0
TOTAL	520.816E-9
TOTAL TRU	0
TOTAL Eu	0
TOTAL SOLIDS	0

TOTAL PRECIPITATE	0.0 t/d
TOTAL SOLIDS	0.0 t/d
TOTAL MASS	1.632 t/d
TOTAL VOLUME	1.635 m3/d
DENSITY	0.998 t/m3

STREAM 67 Technetium Ion Exchange Eluant Water Make-Up

MASS:	t/d
Al	0
Ba	0
Ca	0
Cd	0
Cl	0
Cr	0
F	0
Fe	0
Hg	0
K	0
La	0
Ni	0
NO2	0
NO3	0
OH	0
Pb	0
PO4	0
SO4	0
TIC	0
TOC	0
U	0
Na	0
H2O	1.635
Cs	0
Sr	0
Tc	0
NH3	0
TRU	0
Am	0
Pu	0
NO	0
Si	0
B	0
SrCO3	0
MnO4-	0
Am(OH)3	0
O	0
O2	0
Mn	0
Pu(OH)4	0
P2O5	0
SO2	0
CO2	0
I2	0
N2	0
Co	0
Eu	0
Zn	0
Mg	0
Zr	0
Li	0
NO2(g)	0
CsIX	0
TcIX	0
Sugar	0
Co(OH)3	0
SO4IX	0
H+	0
(TcO4)-	0
B2O3 (s)	0
MnO2 (s)	0
H2O (s)	0
ZnO (s)	0
Li2O (s)	0
TOC (s)	0
Na2O (s)	0
K2O (s)	0
Al2O3(s)	0
CaO (s)	0
Cr2O3(s)	0
Fe2O3(s)	0
NiO (s)	0
MgO (s)	0
SiO2 (s)	0
ZrO2 (s)	0
BaO (s)	0
Anion(s)	0
La2O3(s)	0
PbO2 (s)	0
UO3 (s)	0

ACTIVITY:	TBq/d
Cs137	0
Sr90	0
Tc99	0
Am241	0
Co60	0
Eu154	0
Eu155	0
Pu238	0
Pu239	0
Pu240	0
Pu241	0
H3	0
C14	0
I129	0
OFP	0
U233	0
U235	0
Cm243+4	0
Np237	0
Sb125	0
Cs137 (s)	0
Sr90 (s)	0
Tc99 (s)	0
Am241 (s)	0
Co60 (s)	0
Eu154 (s)	0
Eu155 (s)	0
Pu238 (s)	0
Pu239 (s)	0
Pu240 (s)	0
Pu241 (s)	0
H3 (s)	0
C14 (s)	0
I129 (s)	0
OFP (s)	0
U233 (s)	0
U235 (s)	0
Cm243+4(s)	0
Np237 (s)	0
Sb125 (s)	0
==========	
TOTAL	0
TOTAL TRU	0
TOTAL Eu	0
TOTAL SOLIDS	0

TOTAL PRECIPITATE	0 t/d
TOTAL SOLIDS	0 t/d
TOTAL MASS	1.635 t/d
TOTAL VOLUME	1.638 m3/d
DENSITY	0.998 t/m3

STREAM 68 Technetium Ion Exchange Eluant Demineralised Water

MASS:	t/d	ACTIVITY:	TBq/d
Al	0.0	Cs137	0
Ba	0.0	Sr90	0
Ca	0.0	Tc99	3.271E-6
Cd	0.0	Am241	0
Cl	0.0	Co60	0
Cr	0.0	Eu154	0
F	0.0	Eu155	0
Fe	0.0	Pu238	0
Hg	0.0	Pu239	0
K	0.0	Pu240	0
La	0.0	Pu241	0
Ni	0.0	H3	0
NO2	0.0	C14	0
NO3	0.0	I129	0
OH	0.0	OFP	0
Pb	0.0	U233	0
PO4	0.0	U235	0
SO4	0.0	Cm243+4	0
TIC	0.0	Np237	0
TOC	0.0	Sb125	0
U	0.0	Cs137 (s)	0
Na	1.215E-9	Sr90 (s)	0
H2O	11.917	Tc99 (s)	0
Cs	0.0	Am241 (s)	0
Sr	0.0	Co60 (s)	0
Tc	0.0	Eu154 (s)	0
NH3	0.0	Eu155 (s)	0
TRU	0.0	Pu238 (s)	0
Am	0.0	Pu239 (s)	0
Pu	0.0	Pu240 (s)	0
NO	0.0	Pu241 (s)	0
Si	0.0	H3 (s)	0
B	0.0	C14 (s)	0
SrCO3	0.0	I129 (s)	0
MnO4-	0.0	OFP (s)	0
Am(OH)3	0.0	U233 (s)	0
O	0.0	U235 (s)	0
O2	0.0	Cm243+4(s)	0
Mn	0.0	Np237 (s)	0
Pu(OH)4	0.0	Sb125 (s)	0
P2O5	0.0		==========
SO2	0.0	TOTAL	3.271E-6
CO2	0.0	TOTAL TRU	0
I2	0.0	TOTAL Eu	0
N2	0.0	TOTAL SOLIDS	0
Co	0.0		
Eu	0.0		
Zn	0.0		
Mg	0.0		
Zr	0.0		
Li	0.0		
NO2(g)	0.0		
CsIX	0.0		
TcIX	0.0		
Sugar	0.0		
Co(OH)3	0.0		
SO4IX	0.0		
H+	0.0		
(TcO4)-	8.622E-9		
B2O3 (s)	0		
MnO2 (s)	0		
H2O (s)	0.0		
ZnO (s)	0		
Li2O (s)	0		
TOC (s)	0.0		
Na2O (s)	0.0		
K2O (s)	0		
Al2O3(s)	0		
CaO (s)	0		
Cr2O3(s)	0.0		
Fe2O3(s)	0		
NiO (s)	0		
MgO (s)	0		
SiO2 (s)	0		
ZrO2 (s)	0		
BaO (s)	0	TOTAL PRECIPITATE	0.0 t/d
Anion(s)	0.0	TOTAL SOLIDS	0.0 t/d
La2O3(s)	0.0	TOTAL MASS	11.917 t/d
PbO2 (s)	0	TOTAL VOLUME	11.876 m3/d
UO3 (s)	0	DENSITY	1.003 t/m3

STREAM 73 Regeneration Caustic Recycle for TcIX Column Feed Displacement

MASS:	t/d	ACTIVITY:	TBq/d
Al	0	Cs137	0
Ba	0	Sr90	0
Ca	0	Tc99	0
Cd	0	Am241	0
Cl	0	Co60	0
Cr	0	Eu154	0
F	0	Eu155	0
Fe	0	Pu238	0
Hg	0	Pu239	0
K	0	Pu240	0
La	0	Pu241	0
Ni	0	H3	0
NO2	0	C14	0
NO3	0	I129	0
OH	1.682E-3	OFP	0
Pb	0	U233	0
PO4	0	U235	0
SO4	0	Cm243+4	0
TIC	0	Np237	0
TOC	0	Sb125	0
U	0	Cs137 (s)	0
Na	2.276E-3	Sr90 (s)	0
H2O	1.186	Tc99 (s)	0
Cs	0	Am241 (s)	0
Sr	0	Co60 (s)	0
Tc	0	Eu154 (s)	0
NH3	0	Eu155 (s)	0
TRU	0	Pu238 (s)	0
Am	0	Pu239 (s)	0
Pu	0	Pu240 (s)	0
NO	0	Pu241 (s)	0
Si	0	H3 (s)	0
B	0	C14 (s)	0
SrCO3	0	I129 (s)	0
MnO4-	0	OFP (s)	0
Am(OH)3	0	U233 (s)	0
O	0	U235 (s)	0
O2	0	Cm243+4(s)	0
Mn	0	Np237 (s)	0
Pu(OH)4	0	Sb125 (s)	0
P2O5	0		==========
SO2	0	TOTAL	0
CO2	0	TOTAL TRU	0
I2	0	TOTAL Eu	0
N2	0	TOTAL SOLIDS	0
Co	0		
Eu	0		
Zn	0		
Mg	0		
Zr	0		
Li	0		
NO2(g)	0		
CsIX	0		
TcIX	0		
Sugar	0		
Co(OH)3	0		
SO4IX	0		
H+	0		
(TcO4)-	0		
B2O3 (s)	0		
MnO2 (s)	0		
H2O (s)	0		
ZnO (s)	0		
Li2O (s)	0		
TOC (s)	0		
Na2O (s)	0		
K2O (s)	0		
Al2O3(s)	0		
CaO (s)	0		
Cr2O3(s)	0		
Fe2O3(s)	0		
NiO (s)	0		
MgO (s)	0		
SiO2 (s)	0		
ZrO2 (s)	0		
BaO (s)	0	TOTAL PRECIPITATE	0 t/d
Anion(s)	0	TOTAL SOLIDS	0 t/d
La2O3(s)	0	TOTAL MASS	1.190 t/d
PbO2 (s)	0	TOTAL VOLUME	1.180 m3/d
UO3 (s)	0	DENSITY	1.009 t/m3

STREAM 60 0.1M NaOH TcIX Residual Feed Displacement

MASS:	t/d
Al	0
Ba	0
Ca	0
Cd	0
Cl	0
Cr	0
F	0
Fe	0
Hg	0
K	0
La	0
Ni	0
NO2	0
NO3	0
OH	2.243E-3
Pb	0
PO4	0
SO4	0
TIC	0
TOC	0
U	0
Na	3.034E-3
H2O	1.318
Cs	0
Sr	0
Tc	0
NH3	0
TRU	0
Am	0
Pu	0
NO	0
Si	0
B	0
SrCO3	0
MnO4-	0
Am(OH)3	0
O	0
O2	0
Mn	0
Pu(OH)4	0
P2O5	0
SO2	0
CO2	0
I2	0
N2	0
Co	0
Eu	0
Zn	0
Mg	0
Zr	0
Li	0
NO2(g)	0
CsIX	0
TcIX	0
Sugar	0
Co(OH)3	0
SO4IX	0
H+	0
(TcO4)-	0
B2O3 (s)	0
MnO2 (s)	0
H2O (s)	0
ZnO (s)	0
Li2O (s)	0
TOC (s)	0
Na2O (s)	0
K2O (s)	0
Al2O3(s)	0
CaO (s)	0
Cr2O3(s)	0
Fe2O3(s)	0
NiO (s)	0
MgO (s)	0
SiO2 (s)	0
ZrO2 (s)	0
BaO (s)	0
Anion(s)	0
La2O3(s)	0
PbO2 (s)	0
UO3 (s)	0

ACTIVITY:	TBq/d
Cs137	0
Sr90	0
Tc99	0
Am241	0
Co60	0
Eu154	0
Eu155	0
Pu238	0
Pu239	0
Pu240	0
Pu241	0
H3	0
C14	0
I129	0
OFP	0
U233	0
U235	0
Cm243+4	0
Np237	0
Sb125	0
Cs137 (s)	0
Sr90 (s)	0
Tc99 (s)	0
Am241 (s)	0
Co60 (s)	0
Eu154 (s)	0
Eu155 (s)	0
Pu238 (s)	0
Pu239 (s)	0
Pu240 (s)	0
Pu241 (s)	0
H3 (s)	0
C14 (s)	0
I129 (s)	0
OFP (s)	0
U233 (s)	0
U235 (s)	0
Cm243+4(s)	0
Np237 (s)	0
Sb125 (s)	0
==========	
TOTAL	0
TOTAL TRU	0
TOTAL Eu	0
TOTAL SOLIDS	0

TOTAL PRECIPITATE	0 t/d
TOTAL SOLIDS	0 t/d
TOTAL MASS	1.323 t/d
TOTAL VOLUME	1.319 m3/d
DENSITY	1.003 t/m3

STREAM 61 0.25M NaOH Feed for pH adjustment of Tc IX Column

MASS:	t/d
Al	0
Ba	0
Ca	0
Cd	0
Cl	0
Cr	0
F	0
Fe	0
Hg	0
K	0
La	0
Ni	0
NO2	0
NO3	0
OH	3.365E-3
Pb	0
PO4	0
SO4	0
TIC	0
TOC	0
U	0
Na	4.553E-3
H2O	0.792
Cs	0
Sr	0
Tc	0
NH3	0
TRU	0
Am	0
Pu	0
NO	0
Si	0
B	0
SrCO3	0
MnO4-	0
Am(OH)3	0
O	0
O2	0
Mn	0
Pu(OH)4	0
P2O5	0
SO2	0
CO2	0
I2	0
N2	0
Co	0
Eu	0
Zn	0
Mg	0
Zr	0
Li	0
NO2(g)	0
CsIX	0
TcIX	0
Sugar	0
Co(OH)3	0
SO4IX	0
H+	0
(TcO4)-	0
B2O3 (s)	0
MnO2 (s)	0
H2O (s)	0
ZnO (s)	0
Li2O (s)	0
TOC (s)	0
Na2O (s)	0
K2O (s)	0
Al2O3(s)	0
CaO (s)	0
Cr2O3(s)	0
Fe2O3(s)	0
NiO (s)	0
MgO (s)	0
SiO2 (s)	0
ZrO2 (s)	0
BaO (s)	0
Anion(s)	0
La2O3(s)	0
PbO2 (s)	0
UO3 (s)	0

ACTIVITY:	TBq/d
Cs137	0
Sr90	0
Tc99	0
Am241	0
Co60	0
Eu154	0
Eu155	0
Pu238	0
Pu239	0
Pu240	0
Pu241	0
H3	0
C14	0
I129	0
OFP	0
U233	0
U235	0
Cm243+4	0
Np237	0
Sb125	0
Cs137 (s)	0
Sr90 (s)	0
Tc99 (s)	0
Am241 (s)	0
Co60 (s)	0
Eu154 (s)	0
Eu155 (s)	0
Pu238 (s)	0
Pu239 (s)	0
Pu240 (s)	0
Pu241 (s)	0
H3 (s)	0
C14 (s)	0
I129 (s)	0
OFP (s)	0
U233 (s)	0
U235 (s)	0
Cm243+4(s)	0
Np237 (s)	0
Sb125 (s)	0
TOTAL	0
TOTAL TRU	0
TOTAL Eu	0
TOTAL SOLIDS	0

TOTAL PRECIPITATE	0 t/d
TOTAL SOLIDS	0 t/d
TOTAL MASS	0.800 t/d
TOTAL VOLUME	0.792 m3/d
DENSITY	1.010 t/m3

STREAM 70 Concentrated Technetium LAW Intermediate Product

MASS:	t/d
Al	0.0
Ba	0.0
Ca	0.0
Cd	0.0
Cl	0.0
Cr	0.0
F	0.0
Fe	0.0
Hg	0.0
K	0.0
La	0.0
Ni	0.0
NO2	0.0
NO3	0.0
OH	0.0
Pb	0.0
PO4	0.0
SO4	0.0
TIC	0.0
TOC	0.0
U	0.0
Na	1.410E-3
H2O	3.109E-3
Cs	0.0
Sr	0.0
Tc	0.0
NH3	0.0
TRU	0.0
Am	0.0
Pu	0.0
NO	0.0
Si	0.0
B	0.0
SrCO3	0.0
MnO4-	0.0
Am(OH)3	0.0
O	0.0
O2	0.0
Mn	0.0
Pu(OH)4	0.0
P2O5	0.0
SO2	0.0
CO2	0.0
I2	0.0
N2	0.0
Co	0.0
Eu	0.0
Zn	0.0
Mg	0.0
Zr	0.0
Li	0.0
NO2(g)	0.0
CsIX	0.0
TcIX	0.0
Sugar	0.0
Co(OH)3	0.0
SO4IX	0.0
H+	0.0
(TcO4)-	9.992E-3
B2O3 (s)	0
MnO2 (s)	0
H2O (s)	0.0
ZnO (s)	0
Li2O (s)	0
TOC (s)	0.0
Na2O (s)	0.0
K2O (s)	0
Al2O3(s)	0
CaO (s)	0
Cr2O3(s)	0.0
Fe2O3(s)	0
NiO (s)	0
MgO (s)	0
SiO2 (s)	0
ZrO2 (s)	0
BaO (s)	0
Anion(s)	0.0
La2O3(s)	0.0
PbO2 (s)	0
UO3 (s)	0

ACTIVITY:	TBq/d
Cs137	0
Sr90	0
Tc99	3.792
Am241	0
Co60	0
Eu154	0
Eu155	0
Pu238	0
Pu239	0
Pu240	0
Pu241	0
H3	0
C14	0
I129	0
OFP	0
U233	0
U235	0
Cm243+4	0
Np237	0
Sb125	0
Cs137 (s)	0
Sr90 (s)	0
Tc99 (s)	0
Am241 (s)	0
Co60 (s)	0
Eu154 (s)	0
Eu155 (s)	0
Pu238 (s)	0
Pu239 (s)	0
Pu240 (s)	0
Pu241 (s)	0
H3 (s)	0
C14 (s)	0
I129 (s)	0
OFP (s)	0
U233 (s)	0
U235 (s)	0
Cm243+4(s)	0
Np237 (s)	0
Sb125 (s)	0
==========	
TOTAL	3.792
TOTAL TRU	0
TOTAL Eu	0
TOTAL SOLIDS	0

TOTAL PRECIPITATE	0.0	t/d
TOTAL SOLIDS	0.0	t/d
TOTAL MASS	14.511E-3	t/d
TOTAL VOLUME	6.761E-3	m3/d
DENSITY	2.140	t/m3

STREAM 13 Feed from Tc Ion Exchange to LAW SBS Recycle Mixing Vessel

	MASS: t/d
Al	1.099
Ba	58.806E-9
Ca	604.269E-6
Cd	82.208E-9
Cl	0.192
Cr	7.789E-3
F	38.566E-3
Fe	2.115E-3
Hg	0.0
K	1.275
La	63.895E-6
Ni	775.839E-6
NO2	3.641
NO3	6.265
OH	2.487
Pb	3.662E-3
PO4	68.605E-3
SO4	58.984E-3
TIC	0.670
TOC	60.892E-3
U	121.068E-6
Na	8.904
H2O	71.139
Cs	314.244E-9
Sr	127.859E-6
Tc	215.069E-6
NH3	0.507
TRU	247.180E-6
Am	526.913E-9
Pu	37.028E-6
NO	0.0
Si	14.249E-3
B	2.712E-3
SrCO3	0.0
MnO4-	0.0
Am(OH)3	0.0
O	12.430E-3
O2	0.0
Mn	4.287E-3
Pu(OH)4	0.0
P2O5	551.940E-12
SO2	2.210E-9
CO2	0.0
I2	2.054E-3
N2	0.0
Co	572.533E-12
Eu	37.362E-9
Zn	8.562E-3
Mg	1.353E-3
Zr	1.907E-3
Li	730.432E-6
NO2(g)	2.583E-6
CsIX	0.0
TcIX	0.0
Sugar	0.0
Co(OH)3	0.0
SO4IX	0.0
H+	49.086E-9
(TcO4)-	0
B2O3 (s)	0.0
MnO2 (s)	12.372E-9
H2O (s)	0.0
ZnO (s)	109.415E-12
Li2O (s)	0.0
TOC (s)	444.227E-9
Na2O (s)	976.348E-9
K2O (s)	117.494E-9
Al2O3(s)	155.433E-9
CaO (s)	9.210E-9
Cr2O3(s)	13.404E-9
Fe2O3(s)	11.413E-9
NiO (s)	1.552E-9
MgO (s)	2.954E-9
SiO2 (s)	27.099E-9
ZrO2 (s)	2.710E-9
BaO (s)	164.122E-12
Anion(s)	11.385E-9
La2O3(s)	183.418E-12
PbO2 (s)	729.928E-12
UO3 (s)	36.821E-9

	ACTIVITY: TBq/d
Cs137	0.251
Sr90	17.028
Tc99	0.200
Am241	68.497E-3
Co60	23.582E-3
Eu154	0.232
Eu155	0.232
Pu238	11.106E-3
Pu239	78.558E-3
Pu240	21.981E-3
Pu241	0.886
H3	0.0
C14	0
I129	2.670E-3
OFP	12.770E-3
U233	692.698E-6
U235	15.054E-6
Cm243+4	0.0
Np237	5.456E-3
Sb125	0.363
Cs137 (s)	42.016E-6
Sr90 (s)	33.369E-6
Tc99 (s)	77.423E-9
Am241 (s)	57.909E-9
Co60 (s)	373.503E-12
Eu154 (s)	1.942E-9
Eu155 (s)	1.083E-9
Pu238 (s)	8.844E-9
Pu239 (s)	43.411E-9
Pu240 (s)	12.106E-9
Pu241 (s)	487.173E-9
H3 (s)	0.0
C14 (s)	0.0
I129 (s)	0.0
OFP (s)	0.0
U233 (s)	0.0
U235 (s)	0.0
Cm243+4(s)	2.077E-9
Np237 (s)	0.0
Sb125 (s)	1.195E-9
==========	
TOTAL	19.418
TOTAL TRU	0.186
TOTAL Eu	0.464
TOTAL SOLIDS	76.078E-6

TOTAL PRECIPITATE	0.0 t/d
TOTAL SOLIDS	1.824E-6 t/d
TOTAL MASS	96.469 t/d
TOTAL VOLUME	79.707 m3/d
DENSITY	1.210 t/m3

STREAM 75 Feed to LAW Melter Feed Evaporator

	MASS: t/d
Al	1.134
Ba	59.400E-9
Ca	15.166E-3
Cd	91.220E-9
Cl	0.262
Cr	7.867E-3
F	48.207E-3
Fe	14.103E-3
Hg	398.289E-12
K	1.342
La	64.217E-6
Ni	778.431E-6
NO2	3.641
NO3	8.634
OH	1.930
Pb	3.679E-3
PO4	69.986E-3
SO4	64.608E-3
TIC	0.670
TOC	60.892E-3
U	121.676E-6
Na	8.993
H2O	105.660
Cs	324.955E-9
Sr	129.150E-6
Tc	321.373E-6
NH3	0.507
TRU	248.422E-6
Am	529.561E-9
Pu	37.214E-6
NO	0.0
Si	52.076E-3
B	62.881E-3
SrCO3	0.0
MnO4-	0.0
Am(OH)3	0.0
O	3.074
O2	0.0
Mn	4.308E-3
Pu(OH)4	0.0
P2O5	103.655E-9
SO2	377.413E-9
CO2	0.0
I2	2.054E-3
N2	0.0
Co	575.405E-12
Eu	37.550E-9
Zn	30.569E-3
Mg	5.919E-3
Zr	5.805E-3
Li	737.807E-6
NO2(g)	178.344E-6
CsIX	0.0
TcIX	0.0
Sugar	0.0
Co(OH)3	0.0
SO4IX	978.820E-12
H+	3.275E-6
(TcO4)-	0.0
B2O3 (s)	0.0
MnO2 (s)	12.372E-9
H2O (s)	0.0
ZnO (s)	109.415E-12
Li2O (s)	0.0
TOC (s)	444.227E-9
Na2O (s)	976.348E-9
K2O (s)	117.494E-9
Al2O3(s)	155.433E-9
CaO (s)	9.210E-9
Cr2O3(s)	13.404E-9
Fe2O3(s)	11.413E-9
NiO (s)	1.552E-9
MgO (s)	2.954E-9
SiO2 (s)	27.099E-9
ZrO2 (s)	2.710E-9
BaO (s)	164.122E-12
Anion(s)	11.385E-9
La2O3(s)	183.418E-12
PbO2 (s)	729.928E-12
UO3 (s)	36.821E-9

	ACTIVITY: TBq/d
Cs137	0.260
Sr90	17.200
Tc99	0.293
Am241	68.842E-3
Co60	23.701E-3
Eu154	0.233
Eu155	0.233
Pu238	11.162E-3
Pu239	78.953E-3
Pu240	22.091E-3
Pu241	0.891
H3	0.0
C14	0
I129	2.670E-3
OFP	12.835E-3
U233	696.179E-6
U235	15.129E-6
Cm243+4	0.0
Np237	5.484E-3
Sb125	0.365
Cs137 (s)	43.448E-6
Sr90 (s)	33.706E-6
Tc99 (s)	113.857E-9
Am241 (s)	58.200E-9
Co60 (s)	375.380E-12
Eu154 (s)	1.952E-9
Eu155 (s)	1.089E-9
Pu238 (s)	8.888E-9
Pu239 (s)	43.629E-9
Pu240 (s)	12.167E-9
Pu241 (s)	489.621E-9
H3 (s)	0.0
C14 (s)	0.0
I129 (s)	0.0
OFP (s)	0.0
U233 (s)	0.0
U235 (s)	0.0
Cm243+4(s)	993.340E-12
Np237 (s)	0.0
Sb125 (s)	1.201E-9
TOTAL	19.702
TOTAL TRU	0.187
TOTAL Eu	0.467
TOTAL SOLIDS	77.886E-6

TOTAL PRECIPITATE	0.0 t/d
TOTAL SOLIDS	1.824E-6 t/d
TOTAL MASS	136.298 t/d
TOTAL VOLUME	118.287 m3/d
DENSITY	1.152 t/m3

STREAM 74 Overheads from LAW Melter Feed Evaporator

MASS:	t/d
Al	1.134E-6
Ba	0.0
Ca	15.351E-6
Cd	0.0
Cl	504.683E-6
Cr	225.700E-9
F	2.017E-6
Fe	14.145E-6
Hg	0.0
K	384.844E-6
La	0.0
Ni	780.773E-9
NO2	1.523E-3
NO3	15.174E-3
OH	1.936E-3
Pb	118.692E-6
PO4	70.196E-6
SO4	46.314E-6
TIC	672.358E-6
TOC	50.744E-3
U	122.042E-9
Na	301.006E-6
H2O	79.745
Cs	0.0
Sr	563.834E-12
Tc	322.340E-9
NH3	507.207E-9
TRU	248.422E-12
Am	0.0
Pu	0.0
NO	0.0
Si	52.233E-6
B	63.070E-6
SrCO3	0
MnO4-	0.0
Am(OH)3	0.0
O	3.074E-6
O2	0.0
Mn	4.321E-6
Pu(OH)4	0.0
P2O5	0.0
SO2	0.0
CO2	0.0
I2	2.054E-9
N2	0.0
Co	0.0
Eu	0.0
Zn	30.661E-6
Mg	5.967E-6
Zr	5.805E-9
Li	737.807E-12
NO2(g)	178.344E-12
CsIX	0.0
TcIX	0.0
Sugar	0.0
Co(OH)3	0
SO4IX	0.0
H+	0.0
(TcO4)-	0.0
B2O3 (s)	0
MnO2 (s)	0
H2O (s)	0
ZnO (s)	0
Li2O (s)	0.0
TOC (s)	0
Na2O (s)	0
K2O (s)	0
Al2O3(s)	0
CaO (s)	0
Cr2O3(s)	0
Fe2O3(s)	0
NiO (s)	0
MgO (s)	0
SiO2 (s)	0
ZrO2 (s)	0
BaO (s)	0
Anion(s)	0
La2O3(s)	0
PbO2 (s)	0
UO3 (s)	0

ACTIVITY:	TBq/d
Cs137	2.826E-9
Sr90	75.162E-6
Tc99	294.235E-6
Am241	48.878E-9
Co60	23.772E-6
Eu154	233.357E-9
Eu155	233.357E-9
Pu238	3.014E-9
Pu239	21.317E-9
Pu240	5.965E-9
Pu241	240.474E-9
H3	0.0
C14	0
I129	2.670E-9
OFP	12.835E-9
U233	696.179E-12
U235	0.0
Cm243+4	0.0
Np237	5.484E-9
Sb125	365.202E-9
Cs137 (s)	0.0
Sr90 (s)	0
Tc99 (s)	0
Am241 (s)	0
Co60 (s)	0
Eu154 (s)	0
Eu155 (s)	0
Pu238 (s)	0
Pu239 (s)	0
Pu240 (s)	0
Pu241 (s)	0
H3 (s)	0
C14 (s)	0
I129 (s)	0
OFP (s)	0
U233 (s)	0
U235 (s)	0
Cm243+4(s)	0
Np237 (s)	0
Sb125 (s)	0
==========	
TOTAL	394.345E-6
TOTAL TRU	84.657E-9
TOTAL Eu	466.715E-9
TOTAL SOLIDS	0.0

TOTAL PRECIPITATE	0.0 t/d
TOTAL SOLIDS	0.0 t/d
TOTAL MASS	79.816 t/d
TOTAL VOLUME	80.623 m3/d
DENSITY	0.990 t/m3

STREAM 80 Concentrate from LAW Melter Feed Evaporator

MASS:	t/d
Al	1.134
Ba	59.340E-9
Ca	15.151E-3
Cd	91.128E-9
Cl	0.261
Cr	7.867E-3
F	48.205E-3
Fe	14.089E-3
Hg	397.879E-12
K	1.342
La	64.216E-6
Ni	777.650E-6
NO2	3.639
NO3	8.619
OH	1.928
Pb	3.561E-3
PO4	69.916E-3
SO4	64.562E-3
TIC	0.670
TOC	10.149E-3
U	121.554E-6
Na	8.993
H2O	25.915
Cs	324.955E-9
Sr	129.149E-6
Tc	321.050E-6
NH3	0.507
TRU	248.422E-6
Am	529.561E-9
Pu	37.214E-6
NO	0.0
Si	52.024E-3
B	62.818E-3
SrCO3	0.0
MnO4-	0.0
Am(OH)3	0.0
O	3.074
O2	0.0
Mn	4.304E-3
Pu(OH)4	0.0
P2O5	103.655E-9
SO2	377.413E-9
CO2	0.0
I2	2.054E-3
N2	0.0
Co	574.818E-12
Eu	37.550E-9
Zn	30.538E-3
Mg	5.913E-3
Zr	5.805E-3
Li	737.806E-6
NO2(g)	178.344E-6
CsIX	0.0
TcIX	0.0
Sugar	0.0
Co(OH)3	0.0
SO4IX	978.820E-12
H+	3.275E-6
(TcO4)-	0.0
B2O3 (s)	0.0
MnO2 (s)	12.372E-9
H2O (s)	0.0
ZnO (s)	109.415E-12
Li2O (s)	0.0
TOC (s)	444.227E-9
Na2O (s)	976.348E-9
K2O (s)	117.494E-9
Al2O3(s)	155.433E-9
CaO (s)	9.210E-9
Cr2O3(s)	13.404E-9
Fe2O3(s)	11.413E-9
NiO (s)	1.552E-9
MgO (s)	2.954E-9
SiO2 (s)	27.099E-9
ZrO2 (s)	2.710E-9
BaO (s)	164.122E-12
Anion(s)	11.385E-9
La2O3(s)	183.418E-12
PbO2 (s)	729.928E-12
UO3 (s)	36.821E-9

ACTIVITY:	TBq/d
Cs137	0.260
Sr90	17.199
Tc99	0.293
Am241	68.842E-3
Co60	23.677E-3
Eu154	0.233
Eu155	0.233
Pu238	11.162E-3
Pu239	78.953E-3
Pu240	22.091E-3
Pu241	0.891
H3	0.0
C14	0
I129	2.670E-3
OFP	12.835E-3
U233	696.179E-6
U235	15.129E-6
Cm243+4	0.0
Np237	5.484E-3
Sb125	0.365
Cs137 (s)	43.448E-6
Sr90 (s)	33.706E-6
Tc99 (s)	113.857E-9
Am241 (s)	58.200E-9
Co60 (s)	375.380E-12
Eu154 (s)	1.952E-9
Eu155 (s)	1.089E-9
Pu238 (s)	8.888E-9
Pu239 (s)	43.629E-9
Pu240 (s)	12.167E-9
Pu241 (s)	489.621E-9
H3 (s)	0.0
C14 (s)	0.0
I129 (s)	0.0
OFP (s)	0.0
U233 (s)	0.0
U235 (s)	0.0
Cm243+4(s)	993.340E-12
Np237 (s)	0.0
Sb125 (s)	1.201E-9
TOTAL	19.702
TOTAL TRU	0.187
TOTAL Eu	0.467
TOTAL SOLIDS	77.886E-6

TOTAL PRECIPITATE	0.0 t/d
TOTAL SOLIDS	1.824E-6 t/d
TOTAL MASS	56.481 t/d
TOTAL VOLUME	39.101 m3/d
DENSITY	1.445 t/m3

STREAM 81 LAW Glass Formers Feed

MASS:	t/d
Al	2.401
Ba	0
Ca	1.441
Cd	0
Cl	0
Cr	0
F	0
Fe	2.383
Hg	0
K	0
La	0
Ni	0
NO2	0
NO3	0
OH	0
Pb	0
PO4	0
SO4	0
TIC	0
TOC	0
U	0
Na	0
H2O	4.356
Cs	0
Sr	0
Tc	0
NH3	0
TRU	0
Am	0
Pu	0
NO	0
Si	11.296
B	1.743
SrCO3	0
MnO4-	0
Am(OH)3	0
O	22.010
O2	0
Mn	0
Pu(OH)4	0
P2O5	0
SO2	0
CO2	0
I2	0
N2	0
Co	0
Eu	0
Zn	2.170
Mg	0.907
Zr	1.164
Li	0
NO2(g)	0
CsIX	0
TcIX	0
Sugar	0
Co(OH)3	0
SO4IX	0
H+	0
(TcO4)-	0
B2O3 (s)	0
MnO2 (s)	0
H2O (s)	0
ZnO (s)	0
Li2O (s)	0
TOC (s)	0
Na2O (s)	0
K2O (s)	0
Al2O3(s)	0
CaO (s)	0
Cr2O3(s)	0
Fe2O3(s)	0
NiO (s)	0
MgO (s)	0
SiO2 (s)	0
ZrO2 (s)	0
BaO (s)	0
Anion(s)	0
La2O3(s)	0
PbO2 (s)	0
UO3 (s)	0

ACTIVITY:	TBq/d
Cs137	0
Sr90	0
Tc99	0
Am241	0
Co60	0
Eu154	0
Eu155	0
Pu238	0
Pu239	0
Pu240	0
Pu241	0
H3	0
C14	0
I129	0
OFP	0
U233	0
U235	0
Cm243+4	0
Np237	0
Sb125	0
Cs137 (s)	0
Sr90 (s)	0
Tc99 (s)	0
Am241 (s)	0
Co60 (s)	0
Eu154 (s)	0
Eu155 (s)	0
Pu238 (s)	0
Pu239 (s)	0
Pu240 (s)	0
Pu241 (s)	0
H3 (s)	0
C14 (s)	0
I129 (s)	0
OFP (s)	0
U233 (s)	0
U235 (s)	0
Cm243+4(s)	0
Np237 (s)	0
Sb125 (s)	0
==========	
TOTAL	0
TOTAL TRU	0
TOTAL Eu	0
TOTAL SOLIDS	0

TOTAL PRECIPITATE	0	t/d
TOTAL SOLIDS	0	t/d
TOTAL MASS	49.872	t/d
TOTAL VOLUME	49.872	m3/d
DENSITY	1.000	t/m3

STREAM 76 LAW Melter Feed with Glass Formers

MASS:	t/d
Al	3.535
Ba	59.340E-9
Ca	1.456
Cd	91.128E-9
Cl	0.261
Cr	7.867E-3
F	48.205E-3
Fe	2.398
Hg	397.879E-12
K	1.342
La	64.216E-6
Ni	777.650E-6
NO2	3.639
NO3	8.619
OH	1.928
Pb	3.561E-3
PO4	69.916E-3
SO4	64.562E-3
TIC	0.670
TOC	10.149E-3
U	121.554E-6
Na	8.993
H2O	30.271
Cs	324.955E-9
Sr	129.149E-6
Tc	321.050E-6
NH3	0.507
TRU	248.422E-6
Am	529.561E-9
Pu	37.214E-6
NO	0.0
Si	11.348
B	1.805
SrCO3	0.0
MnO4-	0.0
Am(OH)3	0.0
O	25.084
O2	0.0
Mn	4.304E-3
Pu(OH)4	0.0
P2O5	103.655E-9
SO2	377.413E-9
CO2	0.0
I2	2.054E-3
N2	0.0
Co	574.818E-12
Eu	37.550E-9
Zn	2.201
Mg	0.913
Zr	1.170
Li	737.806E-6
NO2(g)	178.344E-6
CsIX	0.0
TcIX	0.0
Sugar	0.0
Co(OH)3	0.0
SO4IX	978.820E-12
H+	3.275E-6
(TcO4)-	0.0
B2O3 (s)	0.0
MnO2 (s)	12.372E-9
H2O (s)	0.0
ZnO (s)	109.415E-12
Li2O (s)	0.0
TOC (s)	444.227E-9
Na2O (s)	976.348E-9
K2O (s)	117.494E-9
Al2O3(s)	155.433E-9
CaO (s)	9.210E-9
Cr2O3(s)	13.404E-9
Fe2O3(s)	11.413E-9
NiO (s)	1.552E-9
MgO (s)	2.954E-9
SiO2 (s)	27.099E-9
ZrO2 (s)	2.710E-9
BaO (s)	164.122E-12
Anion(s)	11.385E-9
La2O3(s)	183.418E-12
PbO2 (s)	729.928E-12
UO3 (s)	36.821E-9

ACTIVITY:	TBq/d
Cs137	0.260
Sr90	17.199
Tc99	0.293
Am241	68.842E-3
Co60	23.677E-3
Eu154	0.233
Eu155	0.233
Pu238	11.162E-3
Pu239	78.953E-3
Pu240	22.091E-3
Pu241	0.891
H3	0.0
C14	0
I129	2.670E-3
OFP	12.835E-3
U233	696.179E-6
U235	15.129E-6
Cm243+4	0.0
Np237	5.484E-3
Sb125	0.365
Cs137 (s)	43.448E-6
Sr90 (s)	33.706E-6
Tc99 (s)	113.857E-9
Am241 (s)	58.200E-9
Co60 (s)	375.380E-12
Eu154 (s)	1.952E-9
Eu155 (s)	1.089E-9
Pu238 (s)	8.888E-9
Pu239 (s)	43.629E-9
Pu240 (s)	12.167E-9
Pu241 (s)	489.621E-9
H3 (s)	0.0
C14 (s)	0.0
I129 (s)	0.0
OFP (s)	0.0
U233 (s)	0.0
U235 (s)	0.0
Cm243+4(s)	993.340E-12
Np237 (s)	0.0
Sb125 (s)	1.201E-9
==========	==========
TOTAL	19.702
TOTAL TRU	0.187
TOTAL Eu	0.467
TOTAL SOLIDS	77.886E-6

TOTAL PRECIPITATE	0.0	t/d
TOTAL SOLIDS	1.824E-6	t/d
TOTAL MASS	106.353	t/d
TOTAL VOLUME	80.112	m3/d
DENSITY	1.328	t/m3

STREAM 77 LAW Melter Sugar Addition

MASS:	t/d
Al	0
Ba	0
Ca	0
Cd	0
Cl	0
Cr	0
F	0
Fe	0
Hg	0
K	0
La	0
Ni	0
NO2	0
NO3	0
OH	0
Pb	0
PO4	0
SO4	0
TIC	0
TOC	0
U	0
Na	0
H2O	0
Cs	0
Sr	0
Tc	0
NH3	0
TRU	0
Am	0
Pu	0
NO	0
Si	0
B	0
SrCO3	0
MnO4-	0
Am(OH)3	0
O	0
O2	0
Mn	0
Pu(OH)4	0
P2O5	0
SO2	0
CO2	0
I2	0
N2	0
Co	0
Eu	0
Zn	0
Mg	0
Zr	0
Li	0
NO2(g)	0
CsIX	0
TcIX	0
Sugar	7.014
Co(OH)3	0
SO4IX	0
H+	0
(TcO4)-	0
B2O3 (s)	0
MnO2 (s)	0
H2O (s)	0
ZnO (s)	0
Li2O (s)	0
TOC (s)	0
Na2O (s)	0
K2O (s)	0
Al2O3(s)	0
CaO (s)	0
Cr2O3(s)	0
Fe2O3(s)	0
NiO (s)	0
MgO (s)	0
SiO2 (s)	0
ZrO2 (s)	0
BaO (s)	0
Anion(s)	0
La2O3(s)	0
PbO2 (s)	0
UO3 (s)	0

ACTIVITY:	TBq/d
Cs137	0
Sr90	0
Tc99	0
Am241	0
Co60	0
Eu154	0
Eu155	0
Pu238	0
Pu239	0
Pu240	0
Pu241	0
H3	0
C14	0
I129	0
OFP	0
U233	0
U235	0
Cm243+4	0
Np237	0
Sb125	0
Cs137 (s)	0
Sr90 (s)	0
Tc99 (s)	0
Am241 (s)	0
Co60 (s)	0
Eu154 (s)	0
Eu155 (s)	0
Pu238 (s)	0
Pu239 (s)	0
Pu240 (s)	0
Pu241 (s)	0
H3 (s)	0
C14 (s)	0
I129 (s)	0
OFP (s)	0
U233 (s)	0
U235 (s)	0
Cm243+4(s)	0
Np237 (s)	0
Sb125 (s)	0
==========	
TOTAL	0
TOTAL TRU	0
TOTAL Eu	0
TOTAL SOLIDS	0

TOTAL PRECIPITATE	0	t/d
TOTAL SOLIDS	0	t/d
TOTAL MASS	7.014	t/d
TOTAL VOLUME	4.437	m3/d
DENSITY	1.581	t/m3

STREAM 82 Feed to LAW Melter with Glass Formers and Sugar

MASS:	t/d
Al	3.535
Ba	59.340E-9
Ca	1.456
Cd	91.128E-9
Cl	0.261
Cr	7.867E-3
F	48.205E-3
Fe	2.398
Hg	397.879E-12
K	1.342
La	64.216E-6
Ni	777.650E-6
NO2	3.639
NO3	8.619
OH	1.928
Pb	3.561E-3
PO4	69.916E-3
SO4	64.562E-3
TIC	0.670
TOC	10.149E-3
U	121.554E-6
Na	8.993
H2O	30.271
Cs	324.955E-9
Sr	129.149E-6
Tc	321.050E-6
NH3	0.507
TRU	248.422E-6
Am	529.561E-9
Pu	37.214E-6
NO	0.0
Si	11.348
B	1.805
SrCO3	0.0
MnO4-	0.0
Am(OH)3	0.0
O	25.084
O2	0.0
Mn	4.304E-3
Pu(OH)4	0.0
P2O5	103.655E-9
SO2	377.413E-9
CO2	0.0
I2	2.054E-3
N2	0.0
Co	574.818E-12
Eu	37.550E-9
Zn	2.201
Mg	0.913
Zr	1.170
Li	737.806E-6
NO2(g)	178.344E-6
CsIX	0.0
TcIX	0.0
Sugar	7.014
Co(OH)3	0.0
SO4IX	978.820E-12
H+	3.275E-6
(TcO4)-	0.0
B2O3 (s)	0.0
MnO2 (s)	12.372E-9
H2O (s)	0.0
ZnO (s)	109.415E-12
Li2O (s)	0.0
TOC (s)	444.227E-9
Na2O (s)	976.348E-9
K2O (s)	117.494E-9
Al2O3(s)	155.433E-9
CaO (s)	9.210E-9
Cr2O3(s)	13.404E-9
Fe2O3(s)	11.413E-9
NiO (s)	1.552E-9
MgO (s)	2.954E-9
SiO2 (s)	27.099E-9
ZrO2 (s)	2.710E-9
BaO (s)	164.122E-12
Anion(s)	11.385E-9
La2O3(s)	183.418E-12
PbO2 (s)	729.928E-12
UO3 (s)	36.821E-9

ACTIVITY:	TBq/d
Cs137	0.260
Sr90	17.199
Tc99	0.293
Am241	68.842E-3
Co60	23.677E-3
Eu154	0.233
Eu155	0.233
Pu238	11.162E-3
Pu239	78.953E-3
Pu240	22.091E-3
Pu241	0.891
H3	0.0
C14	0
I129	2.670E-3
OFP	12.835E-3
U233	696.179E-6
U235	15.129E-6
Cm243+4	0.0
Np237	5.484E-3
Sb125	0.365
Cs137 (s)	43.448E-6
Sr90 (s)	33.706E-6
Tc99 (s)	113.857E-9
Am241 (s)	58.200E-9
Co60 (s)	375.380E-12
Eu154 (s)	1.952E-9
Eu155 (s)	1.089E-9
Pu238 (s)	8.888E-9
Pu239 (s)	43.629E-9
Pu240 (s)	12.167E-9
Pu241 (s)	489.621E-9
H3 (s)	0.0
C14 (s)	0.0
I129 (s)	0.0
OFP (s)	0.0
U233 (s)	0.0
U235 (s)	0.0
Cm243+4(s)	993.340E-12
Np237 (s)	0.0
Sb125 (s)	1.201E-9
TOTAL	19.702
TOTAL TRU	0.187
TOTAL Eu	0.467
TOTAL SOLIDS	77.886E-6

TOTAL PRECIPITATE	0.0	t/d
TOTAL SOLIDS	1.824E-6	t/d
TOTAL MASS	113.368	t/d
TOTAL VOLUME	87.209	m3/d
DENSITY	1.300	t/m3

STREAM 83 Sparge and Film Cooler Air Feed to LAW Melter

MASS:	t/d
Al	0
Ba	0
Ca	0
Cd	0
Cl	0
Cr	0
F	0
Fe	0
Hg	0
K	0
La	0
Ni	0
NO2	0
NO3	0
OH	0
Pb	0
PO4	0
SO4	0
TIC	0
TOC	0
U	0
Na	0
H2O	1.822
Cs	0
Sr	0
Tc	0
NH3	0.0
TRU	0
Am	0
Pu	0
NO	0
Si	0
B	0
SrCO3	0
MnO4-	0
Am(OH)3	0
O	0
O2	30.940
Mn	0
Pu(OH)4	0
P2O5	0
SO2	0
CO2	69.649E-3
I2	0
N2	108.289
Co	0
Eu	0
Zn	0
Mg	0
Zr	0
Li	0
NO2(g)	0
CsIX	0
TcIX	0
Sugar	0
Co(OH)3	0
SO4IX	0
H+	0
(TcO4)-	0
B2O3 (s)	0
MnO2 (s)	0
H2O (s)	0
ZnO (s)	0
Li2O (s)	0
TOC (s)	0
Na2O (s)	0
K2O (s)	0
Al2O3(s)	0
CaO (s)	0
Cr2O3(s)	0
Fe2O3(s)	0
NiO (s)	0
MgO (s)	0
SiO2 (s)	0
ZrO2 (s)	0
BaO (s)	0
Anion(s)	0
La2O3(s)	0
PbO2 (s)	0
UO3 (s)	0

ACTIVITY:	TBq/d
Cs137	0
Sr90	0
Tc99	0
Am241	0
Co60	0
Eu154	0
Eu155	0
Pu238	0
Pu239	0
Pu240	0
Pu241	0
H3	0
C14	0
I129	0
OFP	0
U233	0
U235	0
Cm243+4	0
Np237	0
Sb125	0
Cs137 (s)	0
Sr90 (s)	0
Tc99 (s)	0
Am241 (s)	0
Co60 (s)	0
Eu154 (s)	0
Eu155 (s)	0
Pu238 (s)	0
Pu239 (s)	0
Pu240 (s)	0
Pu241 (s)	0
H3 (s)	0
C14 (s)	0
I129 (s)	0
OFP (s)	0
U233 (s)	0
U235 (s)	0
Cm243+4(s)	0
Np237 (s)	0
Sb125 (s)	0
==========	
TOTAL	0
TOTAL TRU	0
TOTAL Eu	0
TOTAL SOLIDS	0

TOTAL PRECIPITATE	0	t/d
TOTAL SOLIDS	0	t/d
TOTAL MASS	141.120	t/d
TOTAL VOLUME	127.398E3	m3/d
DENSITY	1.108E-3	t/m3

STREAM 84 LAW Glass Product

	MASS: t/d		ACTIVITY: TBq/d
Al	3.499	Cs137	0.251
Ba	58.747E-9	Sr90	17.027
Ca	1.442	Tc99	0.195
Cd	82.016E-9	Am241	68.497E-3
Cl	0.174	Co60	23.558E-3
Cr	7.788E-3	Eu154	0.232
F	36.154E-3	Eu155	0.232
Fe	2.386	Pu238	11.106E-3
Hg	0	Pu239	78.558E-3
K	1.274	Pu240	21.981E-3
La	63.895E-6	Pu241	0.886
Ni	775.058E-6	H3	0.0
NO2	0	C14	0
NO3	0	I129	0.0
OH	0	OFP	12.770E-3
Pb	3.543E-3	U233	692.698E-6
PO4	68.517E-3	U235	15.054E-6
SO4	56.492E-3	Cm243+4	0.0
TIC	0	Np237	5.456E-3
TOC	0	Sb125	0.363
U	120.946E-6	Cs137 (s)	42.000E-6
Na	8.903	Sr90 (s)	33.369E-6
H2O	0	Tc99 (s)	75.905E-9
Cs	314.123E-9	Am241 (s)	57.909E-9
Sr	127.858E-6	Co60 (s)	373.503E-12
Tc	214.034E-6	Eu154 (s)	1.942E-9
NH3	0	Eu155 (s)	1.083E-9
TRU	247.180E-6	Pu238 (s)	8.844E-9
Am	526.913E-9	Pu239 (s)	43.411E-9
Pu	37.028E-6	Pu240 (s)	12.106E-9
NO	0	Pu241 (s)	487.173E-9
Si	11.311	H3 (s)	0.0
B	1.745	C14 (s)	0
SrCO3	0.0	I129 (s)	0
MnO4-	0.0	OFP (s)	0.0
Am(OH)3	0.0	U233 (s)	0.0
O	24.833	U235 (s)	0.0
O2	0	Cm243+4 (s)	988.373E-12
Mn	4.282E-3	Np237 (s)	0.0
Pu(OH)4	0.0	Sb125 (s)	1.195E-9
P2O5	0		==========
SO2	0	TOTAL	19.411
CO2	0	TOTAL TRU	0.186
I2	0	TOTAL Eu	0.464
N2	0	TOTAL SOLIDS	76.059E-6
Co	571.943E-12		
Eu	37.362E-9		
Zn	2.179		
Mg	0.909		
Zr	1.166		
Li	730.428E-6		
NO2(g)	0		
CsIX	0		
TcIX	0		
Sugar	0		
Co(OH)3	0.0		
SO4IX	0		
H+	0		
(TcO4)-	0.0		
B2O3 (s)	0.0		
MnO2 (s)	12.372E-9		
H2O (s)	0.0		
ZnO (s)	109.415E-12		
Li2O (s)	0.0		
TOC (s)	444.227E-9		
Na2O (s)	976.348E-9		
K2O (s)	117.494E-9		
Al2O3(s)	155.433E-9		
CaO (s)	9.210E-9		
Cr2O3(s)	13.404E-9		
Fe2O3(s)	11.413E-9		
NiO (s)	1.552E-9		
MgO (s)	2.954E-9		
SiO2 (s)	27.099E-9		
ZrO2 (s)	2.710E-9		
BaO (s)	164.122E-12	TOTAL PRECIPITATE	0.0 t/d
Anion(s)	11.385E-9	TOTAL SOLIDS	1.824E-6 t/d
La2O3(s)	183.418E-12	TOTAL MASS	60.000 t/d
PbO2 (s)	729.928E-12	TOTAL VOLUME	22.642 m3/d
UO3 (s)	36.821E-9	DENSITY	2.650 t/m3

STREAM 85 LAW Melter Offgas to LAW SBS

MASS:	t/d
Al	35.348E-3
Ba	593.400E-12
Ca	14.563E-3
Cd	9.113E-9
Cl	87.142E-3
Cr	78.670E-6
F	12.051E-3
Fe	11.988E-3
Hg	397.879E-12
K	67.078E-3
La	321.082E-9
Ni	2.592E-6
NO2	0.0
NO3	0.0
OH	0.0
Pb	17.804E-6
PO4	0.0
SO4	0.0
TIC	0.0
TOC	0
U	607.768E-9
Na	89.932E-3
H2O	37.179
Cs	10.832E-9
Sr	1.291E-6
Tc	107.017E-6
NH3	0.507
TRU	1.242E-6
Am	2.648E-9
Pu	186.068E-9
NO	2.290
Si	37.828E-3
B	60.182E-3
SrCO3	0.0
MnO4-	0.0
Am(OH)3	0.0
O	3.106
O2	26.824
Mn	21.519E-6
Pu(OH)4	0.0
P2O5	1.044E-3
SO2	5.383E-3
CO2	11.405
I2	2.054E-3
N2	109.205
Co	0.0
Eu	187.749E-12
Zn	22.007E-3
Mg	4.566E-3
Zr	3.899E-3
Li	7.378E-6
NO2(g)	3.515
CsIX	0.0
TcIX	0.0
Sugar	0.0
Co(OH)3	0.0
SO4IX	978.820E-12
H+	3.275E-6
(TcO4)-	0.0
B2O3 (s)	0.0
MnO2 (s)	0.0
H2O (s)	0.0
ZnO (s)	0.0
Li2O (s)	0.0
TOC (s)	0.0
Na2O (s)	0
K2O (s)	0.0
Al2O3(s)	0
CaO (s)	0.0
Cr2O3(s)	0.0
Fe2O3(s)	0.0
NiO (s)	0
MgO (s)	0.0
SiO2 (s)	0.0
ZrO2 (s)	0.0
BaO (s)	0.0
Anion(s)	0.0
La2O3(s)	0.0
PbO2 (s)	0.0
UO3 (s)	0.0

ACTIVITY:	TBq/d
Cs137	8.666E-3
Sr90	0.172
Tc99	97.686E-3
Am241	344.208E-6
Co60	118.384E-6
Eu154	1.167E-3
Eu155	1.167E-3
Pu238	55.811E-6
Pu239	394.763E-6
Pu240	110.456E-6
Pu241	4.453E-3
H3	0.0
C14	0.0
I129	2.670E-3
OFP	64.173E-6
U233	3.481E-6
U235	75.646E-9
Cm243+4	0.0
Np237	27.419E-6
Sb125	1.826E-3
Cs137 (s)	1.448E-6
Sr90 (s)	337.058E-9
Tc99 (s)	37.952E-9
Am241 (s)	291.001E-12
Co60 (s)	0.0
Eu154 (s)	0.0
Eu155 (s)	0.0
Pu238 (s)	0.0
Pu239 (s)	218.144E-12
Pu240 (s)	0.0
Pu241 (s)	2.448E-9
H3 (s)	0.0
C14 (s)	0.0
I129 (s)	0.0
OFP (s)	0.0
U233 (s)	0.0
U235 (s)	0.0
Cm243+4(s)	0.0
Np237 (s)	0.0
Sb125 (s)	0.0
==========	
TOTAL	0.291
TOTAL TRU	932.658E-6
TOTAL Eu	2.334E-3
TOTAL SOLIDS	1.826E-6

TOTAL PRECIPITATE	0.0 t/d
TOTAL SOLIDS	0.0 t/d
TOTAL MASS	194.488 t/d
TOTAL VOLUME	192.209E3 m3/d
DENSITY	1.012E-3 t/m3

STREAM 90 LAW WESP Condensate Recycle to SBS

MASS:	t/d
Al	1.177E-3
Ba	0.0
Ca	484.933E-6
Cd	2.936E-9
Cl	0
Cr	2.620E-6
F	0
Fe	399.196E-6
Hg	0
K	13.402E-3
La	10.692E-9
Ni	517.915E-9
NO2	0
NO3	0
OH	19.095E-3
Pb	3.557E-6
PO4	0
SO4	0
TIC	0
TOC	0
U	20.239E-9
Na	17.950E-3
H2O	0.240
Cs	3.490E-9
Sr	43.007E-9
Tc	20.690E-6
NH3	0
TRU	41.362E-9
Am	0.0
Pu	6.196E-9
NO	0
Si	1.260E-3
B	12.024E-3
SrCO3	0
MnO4-	0
Am(OH)3	0
O	94.454E-3
O2	0
Mn	716.595E-9
Pu(OH)4	0
P2O5	388.311E-6
SO2	0
CO2	0
I2	0
N2	0
Co	0.0
Eu	0.0
Zn	732.840E-6
Mg	152.062E-6
Zr	129.822E-6
Li	1.473E-6
NO2(g)	0
CsIX	0
TcIX	0
Sugar	0.0
Co(OH)3	0
SO4IX	0
H+	0
(TcO4)-	0.0
B2O3 (s)	0
MnO2 (s)	0
H2O (s)	0
ZnO (s)	0
Li2O (s)	0
TOC (s)	0
Na2O (s)	0
K2O (s)	0
Al2O3(s)	0
CaO (s)	0
Cr2O3(s)	0
Fe2O3(s)	0
NiO (s)	0
MgO (s)	0
SiO2 (s)	0
ZrO2 (s)	0
BaO (s)	0
Anion(s)	0
La2O3(s)	0
PbO2 (s)	0
UO3 (s)	0

ACTIVITY:	TBq/d
Cs137	2.792E-3
Sr90	5.542E-3
Tc99	15.630E-3
Am241	11.462E-6
Co60	11.827E-6
Eu154	38.854E-6
Eu155	38.854E-6
Pu238	1.859E-6
Pu239	13.146E-6
Pu240	3.678E-6
Pu241	148.292E-6
H3	0.0
C14	0
I129	0
OFP	2.137E-6
U233	115.914E-9
U235	2.519E-9
Cm243+4	0.0
Np237	913.063E-9
Sb125	60.806E-6
Cs137 (s)	466.663E-9
Sr90 (s)	10.861E-9
Tc99 (s)	6.072E-9
Am241 (s)	0.0
Co60 (s)	0.0
Eu154 (s)	0.0
Eu155 (s)	0.0
Pu238 (s)	0.0
Pu239 (s)	0.0
Pu240 (s)	0.0
Pu241 (s)	0.0
H3 (s)	0.0
C14 (s)	0
I129 (s)	0
OFP (s)	0.0
U233 (s)	0.0
U235 (s)	0.0
Cm243+4(s)	0.0
Np237 (s)	0.0
Sb125 (s)	0.0
TOTAL	24.297E-3
TOTAL TRU	31.058E-6
TOTAL Eu	77.708E-6
TOTAL SOLIDS	483.699E-9

TOTAL PRECIPITATE	0 t/d
TOTAL SOLIDS	0 t/d
TOTAL MASS	0.402 t/d
TOTAL VOLUME	0.379 m3/d
DENSITY	1.060 t/m3

STREAM 87 Liquid Effluent from LAW SBS

MASS:	t/d
Al	35.346E-3
Ba	593.380E-12
Ca	14.562E-3
Cd	9.012E-9
Cl	69.714E-3
Cr	78.667E-6
F	9.641E-3
Fe	11.987E-3
Hg	389.922E-12
K	67.065E-3
La	321.072E-9
Ni	2.592E-6
NO2	0.0
NO3	2.369
OH	9.563E-6
Pb	17.800E-6
PO4	1.380E-3
SO4	5.625E-3
TIC	0.0
TOC	0
U	607.748E-9
Na	89.896E-3
H2O	33.932
Cs	10.711E-9
Sr	1.291E-6
Tc	106.303E-6
NH3	0
TRU	1.242E-6
Am	2.648E-9
Pu	186.062E-9
NO	0.0
Si	37.827E-3
B	60.170E-3
SrCO3	0.0
MnO4-	0.0
Am(OH)3	0.0
O	3.061
O2	0
Mn	21.519E-6
Pu(OH)4	0.0
P2O5	103.103E-9
SO2	375.203E-9
CO2	0
I2	0
N2	0
Co	0.0
Eu	187.743E-12
Zn	22.006E-3
Mg	4.566E-3
Zr	3.898E-3
Li	7.375E-6
NO2(g)	175.760E-6
CsIX	0.0
TcIX	0.0
Sugar	0.0
Co(OH)3	0
SO4IX	969.031E-12
H+	32.746E-3
(TcO4)-	0.0
B2O3 (s)	0.0
MnO2 (s)	0.0
H2O (s)	0.0
ZnO (s)	0.0
Li2O (s)	0.0
TOC (s)	0.0
Na2O (s)	0
K2O (s)	0.0
Al2O3(s)	0
CaO (s)	0.0
Cr2O3(s)	0.0
Fe2O3(s)	0.0
NiO (s)	0
MgO (s)	0.0
SiO2 (s)	0.0
ZrO2 (s)	0.0
BaO (s)	0.0
Anion(s)	0.0
La2O3(s)	0.0
PbO2 (s)	0.0
UO3 (s)	0.0

ACTIVITY:	TBq/d
Cs137	8.570E-3
Sr90	0.172
Tc99	93.779E-3
Am241	344.196E-6
Co60	118.372E-6
Eu154	1.167E-3
Eu155	1.167E-3
Pu238	55.809E-6
Pu239	394.750E-6
Pu240	110.452E-6
Pu241	4.453E-3
H3	0
C14	0
I129	0
OFP	64.171E-6
U233	3.481E-6
U235	75.644E-9
Cm243+4	0.0
Np237	27.418E-6
Sb125	1.826E-3
Cs137 (s)	1.432E-6
Sr90 (s)	336.683E-9
Tc99 (s)	36.434E-9
Am241 (s)	290.991E-12
Co60 (s)	0.0
Eu154 (s)	0.0
Eu155 (s)	0.0
Pu238 (s)	0.0
Pu239 (s)	218.136E-12
Pu240 (s)	0.0
Pu241 (s)	2.448E-9
H3 (s)	0.0
C14 (s)	0
I129 (s)	0
OFP (s)	0.0
U233 (s)	0.0
U235 (s)	0.0
Cm243+4(s)	0.0
Np237 (s)	0.0
Sb125 (s)	0.0
==========	
TOTAL	0.284
TOTAL TRU	932.627E-6
TOTAL Eu	2.333E-3
TOTAL SOLIDS	1.808E-6

TOTAL PRECIPITATE	0.0	t/d
TOTAL SOLIDS	0.0	t/d
TOTAL MASS	39.828	t/d
TOTAL VOLUME	39.133	m3/d
DENSITY	1.018	t/m3

STREAM 88 LAW Melter Offgas from LAW SBS

MASS:	t/d	ACTIVITY:	TBq/d
Al	1.178E-3	Cs137	2.889E-3
Ba	0.0	Sr90	5.733E-3
Ca	485.418E-6	Tc99	19.537E-3
Cd	3.038E-9	Am241	11.474E-6
Cl	17.428E-3	Co60	11.838E-6
Cr	2.622E-6	Eu154	38.893E-6
F	2.410E-3	Eu155	38.893E-6
Fe	399.596E-6	Pu238	1.860E-6
Hg	0.0	Pu239	13.159E-6
K	13.416E-3	Pu240	3.682E-6
La	10.703E-9	Pu241	148.440E-6
Ni	518.433E-9	H3	0.0
NO2	0.0	C14	0.0
NO3	0.0	I129	2.670E-3
OH	0.0	OFP	2.139E-6
Pb	3.561E-6	U233	116.030E-9
PO4	0.0	U235	2.522E-9
SO4	0.0	Cm243+4	0.0
TIC	0.0	Np237	913.977E-9
TOC	0	Sb125	60.867E-6
U	20.259E-9	Cs137 (s)	482.754E-9
Na	17.986E-3	Sr90 (s)	11.235E-9
H2O	12.803	Tc99 (s)	7.590E-9
Cs	3.611E-9	Am241 (s)	0.0
Sr	43.050E-9	Co60 (s)	0.0
Tc	21.403E-6	Eu154 (s)	0.0
NH3	0.507	Eu155 (s)	0.0
TRU	41.404E-9	Pu238 (s)	0.0
Am	0.0	Pu239 (s)	0.0
Pu	6.202E-9	Pu240 (s)	0.0
NO	2.290	Pu241 (s)	0.0
Si	1.261E-3	H3 (s)	0.0
B	12.036E-3	C14 (s)	0.0
SrCO3	0.0	I129 (s)	0.0
MnO4-	0.0	OFP (s)	0.0
Am(OH)3	0.0	U233 (s)	0.0
O	0.104	U235 (s)	0.0
O2	26.517	Cm243+4(s)	0.0
Mn	717.312E-9	Np237 (s)	0.0
Pu(OH)4	0.0	Sb125 (s)	0.0
P2O5	401.701E-6		==========
SO2	1.631E-3	TOTAL	31.162E-3
CO2	11.405	TOTAL TRU	31.089E-6
I2	2.054E-3	TOTAL Eu	77.786E-6
N2	109.205	TOTAL SOLIDS	501.685E-9
Co	0.0		
Eu	0.0		
Zn	733.574E-6		
Mg	152.214E-6		
Zr	129.952E-6		
Li	1.476E-6		
NO2(g)	1.758		
CsIX	0.0		
TcIX	0.0		
Sugar	0.0		
Co(OH)3	0.0		
SO4IX	0.0		
H+	0.0		
(TcO4)-	0.0		
B2O3 (s)	0.0		
MnO2 (s)	0.0		
H2O (s)	0.0		
ZnO (s)	0.0		
Li2O (s)	0.0		
TOC (s)	0.0		
Na2O (s)	0		
K2O (s)	0.0		
Al2O3(s)	0		
CaO (s)	0.0		
Cr2O3(s)	0.0		
Fe2O3(s)	0.0		
NiO (s)	0		
MgO (s)	0.0		
SiO2 (s)	0.0		
ZrO2 (s)	0.0		
BaO (s)	0.0	TOTAL PRECIPITATE	0.0 t/d
Anion(s)	0.0	TOTAL SOLIDS	0.0 t/d
La2O3(s)	0.0	TOTAL MASS	164.662 t/d
PbO2 (s)	0.0	TOTAL VOLUME	176.276E3 m3/d
UO3 (s)	0.0	DENSITY	934.113E-6 t/m3

STREAM 89 LAW WESP Water Topup

MASS:	t/d
Al	0
Ba	0
Ca	0
Cd	0
Cl	0
Cr	0
F	0
Fe	0
Hg	0
K	0
La	0
Ni	0
NO2	0
NO3	0
OH	0
Pb	0
PO4	0
SO4	0
TIC	0
TOC	0
U	0
Na	0
H2O	0.250
Cs	0
Sr	0
Tc	0
NH3	0
TRU	0
Am	0
Pu	0
NO	0
Si	0
B	0
SrCO3	0
MnO4-	0
Am(OH)3	0
O	0
O2	0
Mn	0
Pu(OH)4	0
P2O5	0
SO2	0
CO2	0
I2	0
N2	0
Co	0
Eu	0
Zn	0
Mg	0
Zr	0
Li	0
NO2(g)	0
CsIX	0
TcIX	0
Sugar	0
Co(OH)3	0
SO4IX	0
H+	0
(TcO4)-	0
B2O3 (s)	0
MnO2 (s)	0
H2O (s)	0
ZnO (s)	0
Li2O (s)	0
TOC (s)	0
Na2O (s)	0
K2O (s)	0
Al2O3(s)	0
CaO (s)	0
Cr2O3(s)	0
Fe2O3(s)	0
NiO (s)	0
MgO (s)	0
SiO2 (s)	0
ZrO2 (s)	0
BaO (s)	0
Anion(s)	0
La2O3(s)	0
PbO2 (s)	0
UO3 (s)	0

ACTIVITY:	TBq/d
Cs137	0
Sr90	0
Tc99	0
Am241	0
Co60	0
Eu154	0
Eu155	0
Pu238	0
Pu239	0
Pu240	0
Pu241	0
H3	0
C14	0
I129	0
OFP	0
U233	0
U235	0
Cm243+4	0
Np237	0
Sb125	0
Cs137 (s)	0
Sr90 (s)	0
Tc99 (s)	0
Am241 (s)	0
Co60 (s)	0
Eu154 (s)	0
Eu155 (s)	0
Pu238 (s)	0
Pu239 (s)	0
Pu240 (s)	0
Pu241 (s)	0
H3 (s)	0
C14 (s)	0
I129 (s)	0
OFP (s)	0
U233 (s)	0
U235 (s)	0
Cm243+4(s)	0
Np237 (s)	0
Sb125 (s)	0
TOTAL	0
TOTAL TRU	0
TOTAL Eu	0
TOTAL SOLIDS	0

TOTAL PRECIPITATE	0	t/d
TOTAL SOLIDS	0	t/d
TOTAL MASS	0.250	t/d
TOTAL VOLUME	0.251	m3/d
DENSITY	0.998	t/m3

STREAM 102 LAW Vessel Vents

MASS:	t/d
Al	0
Ba	0
Ca	0
Cd	0
Cl	0
Cr	0
F	0
Fe	0
Hg	0
K	0
La	0
Ni	0
NO2	0
NO3	0
OH	0
Pb	0
PO4	0
SO4	0
TIC	0
TOC	0
U	0
Na	0
H2O	1.023
Cs	31.200E-9
Sr	0.0
Tc	1.560E-9
NH3	0
TRU	0.0
Am	0.0
Pu	105.940E-12
NO	0
Si	0
B	0
SrCO3	0
MnO4-	0
Am(OH)3	0
O	0
O2	5.450
Mn	0
Pu(OH)4	0
P2O5	0
SO2	0
CO2	12.268E-3
I2	0
N2	19.075
Co	0
Eu	0
Zn	0
Mg	0
Zr	0
Li	0
NO2(g)	0
CsIX	0
TcIX	0
Sugar	0
Co(OH)3	0
SO4IX	0
H+	0
(TcO4)-	0
B2O3 (s)	0
MnO2 (s)	0
H2O (s)	0
ZnO (s)	0
Li2O (s)	0
TOC (s)	0
Na2O (s)	0
K2O (s)	0
Al2O3(s)	0
CaO (s)	0
Cr2O3(s)	0
Fe2O3(s)	0
NiO (s)	0
MgO (s)	0
SiO2 (s)	0
ZrO2 (s)	0
BaO (s)	0
Anion(s)	0
La2O3(s)	0
PbO2 (s)	0
UO3 (s)	0

ACTIVITY:	TBq/d
Cs137	99.840E-3
Sr90	99.840E-6
Tc99	998.400E-9
Am241	720.000E-9
Co60	0
Eu154	0
Eu155	0
Pu238	0
Pu239	230.000E-9
Pu240	49.900E-9
Pu241	0
H3	0
C14	0
I129	0
OFP	0
U233	0
U235	0
Cm243+4	0
Np237	0
Sb125	0
Cs137 (s)	0
Sr90 (s)	0
Tc99 (s)	0
Am241 (s)	0
Co60 (s)	0
Eu154 (s)	0
Eu155 (s)	0
Pu238 (s)	0
Pu239 (s)	0
Pu240 (s)	0
Pu241 (s)	0
H3 (s)	0
C14 (s)	0
I129 (s)	0
OFP (s)	0
U233 (s)	0
U235 (s)	0
Cm243+4(s)	0
Np237 (s)	0
Sb125 (s)	0
==========	
TOTAL	99.942E-3
TOTAL TRU	999.900E-9
TOTAL Eu	0
TOTAL SOLIDS	0

TOTAL PRECIPITATE	0	t/d
TOTAL SOLIDS	0	t/d
TOTAL MASS	25.560	t/d
TOTAL VOLUME	22.772E3	m3/d
DENSITY	1.122E-3	t/m3

STREAM 91 LAW SBS Neutralised Effluent Recycle

MASS:	t/d
Al	35.346E-3
Ba	593.380E-12
Ca	14.562E-3
Cd	9.012E-9
Cl	69.714E-3
Cr	78.667E-6
F	9.641E-3
Fe	11.987E-3
Hg	389.922E-12
K	67.065E-3
La	321.072E-9
Ni	2.592E-6
NO2	0.0
NO3	2.369
OH	956.331E-12
Pb	17.800E-6
PO4	1.380E-3
SO4	5.625E-3
TIC	0.0
TOC	0
U	607.748E-9
Na	89.896E-3
H2O	33.932
Cs	10.711E-9
Sr	1.291E-6
Tc	106.303E-6
NH3	0
TRU	1.242E-6
Am	2.648E-9
Pu	186.062E-9
NO	0.0
Si	37.827E-3
B	60.170E-3
SrCO3	0.0
MnO4-	0.0
Am(OH)3	0.0
O	3.061
O2	0
Mn	21.519E-6
Pu(OH)4	0.0
P2O5	103.103E-9
SO2	375.203E-9
CO2	0
I2	0
N2	0
Co	0.0
Eu	187.743E-12
Zn	22.006E-3
Mg	4.566E-3
Zr	3.898E-3
Li	7.375E-6
NO2(g)	175.760E-6
CsIX	0.0
TcIX	0.0
Sugar	0.0
Co(OH)3	0
SO4IX	969.031E-12
H+	32.746E-3
(TcO4)-	0.0
B2O3 (s)	0.0
MnO2 (s)	0.0
H2O (s)	0.0
ZnO (s)	0.0
Li2O (s)	0.0
TOC (s)	0.0
Na2O (s)	0
K2O (s)	0.0
Al2O3(s)	0
CaO (s)	0.0
Cr2O3(s)	0.0
Fe2O3(s)	0.0
NiO (s)	0
MgO (s)	0.0
SiO2 (s)	0.0
ZrO2 (s)	0.0
BaO (s)	0.0
Anion(s)	0.0
La2O3(s)	0.0
PbO2 (s)	0.0
UO3 (s)	0.0

ACTIVITY:	TBq/d
Cs137	8.570E-3
Sr90	0.172
Tc99	93.779E-3
Am241	344.196E-6
Co60	118.372E-6
Eu154	1.167E-3
Eu155	1.167E-3
Pu238	55.809E-6
Pu239	394.750E-6
Pu240	110.452E-6
Pu241	4.453E-3
H3	0
C14	0
I129	0
OFP	64.171E-6
U233	3.481E-6
U235	75.644E-9
Cm243+4	0.0
Np237	27.418E-6
Sb125	1.826E-3
Cs137 (s)	1.432E-6
Sr90 (s)	336.683E-9
Tc99 (s)	36.434E-9
Am241 (s)	290.991E-12
Co60 (s)	0.0
Eu154 (s)	0.0
Eu155 (s)	0.0
Pu238 (s)	0.0
Pu239 (s)	218.136E-12
Pu240 (s)	0.0
Pu241 (s)	2.448E-9
H3 (s)	0.0
C14 (s)	0
I129 (s)	0
OFP (s)	0.0
U233 (s)	0.0
U235 (s)	0.0
Cm243+4(s)	0.0
Np237 (s)	0.0
Sb125 (s)	0.0
==========	
TOTAL	0.284
TOTAL TRU	932.627E-6
TOTAL Eu	2.333E-3
TOTAL SOLIDS	1.808E-6

TOTAL PRECIPITATE	0.0 t/d
TOTAL SOLIDS	0.0 t/d
TOTAL MASS	39.828 t/d
TOTAL VOLUME	38.392 m3/d
DENSITY	1.037 t/m3

STREAM 92 LAW WESP Offgas

MASS:	t/d
Al	1.178E-6
Ba	0.0
Ca	485.418E-9
Cd	101.254E-12
Cl	17.428E-3
Cr	2.622E-9
F	2.410E-3
Fe	399.596E-9
Hg	0.0
K	13.416E-6
La	0.0
Ni	518.433E-12
NO2	0.0
NO3	0.0
OH	0.0
Pb	3.561E-9
PO4	0.0
SO4	0.0
TIC	0.0
TOC	0
U	0.0
Na	35.973E-6
H2O	12.803
Cs	120.354E-12
Sr	0.0
Tc	713.445E-9
NH3	0.507
TRU	0.0
Am	0.0
Pu	0.0
NO	2.290
Si	1.261E-6
B	12.036E-6
SrCO3	0.0
MnO4-	0.0
Am(OH)3	0.0
O	103.543E-6
O2	26.517
Mn	717.312E-12
Pu(OH)4	0.0
P2O5	13.390E-6
SO2	1.631E-3
CO2	11.405
I2	2.054E-3
N2	109.205
Co	0.0
Eu	0.0
Zn	733.574E-9
Mg	152.214E-9
Zr	129.952E-9
Li	2.951E-9
NO2(g)	1.758
CsIX	0.0
TcIX	0.0
Sugar	0.0
Co(OH)3	0.0
SO4IX	0.0
H+	0.0
(TcO4)-	0.0
B2O3 (s)	0.0
MnO2 (s)	0.0
H2O (s)	0.0
ZnO (s)	0.0
Li2O (s)	0.0
TOC (s)	0.0
Na2O (s)	0
K2O (s)	0.0
Al2O3(s)	0
CaO (s)	0.0
Cr2O3(s)	0.0
Fe2O3(s)	0.0
NiO (s)	0
MgO (s)	0.0
SiO2 (s)	0.0
ZrO2 (s)	0.0
BaO (s)	0.0
Anion(s)	0.0
La2O3(s)	0.0
PbO2 (s)	0.0
UO3 (s)	0.0

ACTIVITY:	TBq/d
Cs137	96.291E-6
Sr90	191.105E-6
Tc99	3.907E-3
Am241	11.474E-9
Co60	11.838E-9
Eu154	38.893E-9
Eu155	38.893E-9
Pu238	1.860E-9
Pu239	13.159E-9
Pu240	3.682E-9
Pu241	148.440E-9
H3	0.0
C14	0.0
I129	2.670E-3
OFP	2.139E-9
U233	116.030E-12
U235	0.0
Cm243+4	0.0
Np237	913.977E-12
Sb125	60.867E-9
Cs137 (s)	16.092E-9
Sr90 (s)	374.509E-12
Tc99 (s)	1.518E-9
Am241 (s)	0.0
Co60 (s)	0.0
Eu154 (s)	0.0
Eu155 (s)	0.0
Pu238 (s)	0.0
Pu239 (s)	0.0
Pu240 (s)	0.0
Pu241 (s)	0.0
H3 (s)	0.0
C14 (s)	0.0
I129 (s)	0.0
OFP (s)	0.0
U233 (s)	0.0
U235 (s)	0.0
Cm243+4(s)	0.0
Np237 (s)	0.0
Sb125 (s)	0.0
==========	==========
TOTAL	6.865E-3
TOTAL TRU	31.089E-9
TOTAL Eu	77.786E-9
TOTAL SOLIDS	17.986E-9

TOTAL PRECIPITATE	0.0 t/d
TOTAL SOLIDS	0.0 t/d
TOTAL MASS	164.510 t/d
TOTAL VOLUME	176.114E3 m3/d
DENSITY	934.111E-6 t/m3

STREAM 94 Combined Feed to LAW HEPA

MASS:	t/d
Al	1.178E-6
Ba	0.0
Ca	485.418E-9
Cd	101.254E-12
Cl	17.428E-3
Cr	2.622E-9
F	2.410E-3
Fe	399.596E-9
Hg	0.0
K	13.416E-6
La	0.0
Ni	518.433E-12
NO2	0.0
NO3	0.0
OH	0.0
Pb	3.561E-9
PO4	0.0
SO4	0.0
TIC	0.0
TOC	0
U	0.0
Na	35.973E-6
H2O	13.827
Cs	31.320E-9
Sr	0.0
Tc	715.005E-9
NH3	0.507
TRU	0.0
Am	0.0
Pu	112.143E-12
NO	2.290
Si	1.261E-6
B	12.036E-6
SrCO3	0.0
MnO4-	0.0
Am(OH)3	0.0
O	103.543E-6
O2	31.967
Mn	717.312E-12
Pu(OH)4	0.0
P2O5	13.390E-6
SO2	1.631E 3
CO2	11.418
I2	2.054E-3
N2	128.280
Co	0.0
Eu	0.0
Zn	733.574E-9
Mg	152.214E-9
Zr	129.952E-9
Li	2.951E-9
NO2(g)	1.758
CsIX	0.0
TcIX	0.0
Eu(OH)3	0.0
Co(OH)3	0.0
SO4IX	0.0
H+	0.0
(TcO4)-	0.0
B2O3 (s)	0.0
MnO2 (s)	0.0
H2O (s)	0.0
ZnO (s)	0.0
Li2O (s)	0.0
TOC (s)	0.0
Na2O (s)	0
K2O (s)	0.0
Al2O3(s)	0
CaO (s)	0.0
Cr2O3(s)	0.0
Fe2O3(s)	0.0
NiO (s)	0
MgO (s)	0.0
SiO2 (s)	0.0
ZrO2 (s)	0.0
BaO (s)	0.0
Anion(s)	0.0
La2O3(s)	0.0
PbO2 (s)	0.0
UO3 (s)	0.0

ACTIVITY:	TBq/d
Cs137	99.936E-3
Sr90	290.945E-6
Tc99	3.908E-3
Am241	731.474E-9
Co60	11.838E-9
Eu154	38.893E-9
Eu155	38.893E-9
Pu238	1.860E-9
Pu239	243.159E-9
Pu240	53.582E-9
Pu241	148.440E-9
H3	0.0
C14	0.0
I129	2.670E-3
OFP	2.139E-9
U233	116.030E-12
U235	0.0
Cm243+4	0.0
Np237	913.977E-12
Sb125	60.867E-9
Cs137 (s)	16.092E-9
Sr90 (s)	374.509E-12
Tc99 (s)	1.518E-9
Am241 (s)	0.0
Co60 (s)	0.0
Eu154 (s)	0.0
Eu155 (s)	0.0
Pu238 (s)	0.0
Pu239 (s)	0.0
Pu240 (s)	0.0
Pu241 (s)	0.0
H3 (s)	0.0
C14 (s)	0.0
I129 (s)	0.0
OFP (s)	0.0
U233 (s)	0.0
U235 (s)	0.0
Cm243+4(s)	0.0
Np237 (s)	0.0
Sb125 (s)	0.0
==========	==========
TOTAL	0.107
TOTAL TRU	1.031E-6
TOTAL Eu	77.786E-9
TOTAL SOLIDS	17.986E-9

TOTAL PRECIPITATE	0.0	t/d
TOTAL SOLIDS	0.0	t/d
TOTAL MASS	190.070	t/d
TOTAL VOLUME	188.488E3	m3/d
DENSITY	1.008E-3	t/m3

STREAM 93 5M NaOH Feed to LAW Scrubber

MASS:	t/d	ACTIVITY:	TBq/d
Al	0	Cs137	0
Ba	0	Sr90	0
Ca	0	Tc99	0
Cd	0	Am241	0
Cl	0	Co60	0
Cr	0	Eu154	0
F	0	Eu155	0
Fe	0	Pu238	0
Hg	0	Pu239	0
K	0	Pu240	0
La	0	Pu241	0
Ni	0	H3	0
NO2	0	C14	0
NO3	0	I129	0
OH	2.457E-3	OFP	0
Pb	0	U233	0
PO4	0	U235	0
SO4	0	Cm243+4	0
TIC	0	Np237	0
TOC	0	Sb125	0
U	0	Cs137 (s)	0
Na	3.325E-3	Sr90 (s)	0
H2O	28.508E-3	Tc99 (s)	0
Cs	0	Am241 (s)	0
Sr	0	Co60 (s)	0
Tc	0	Eu154 (s)	0
NH3	0	Eu155 (s)	0
TRU	0	Pu238 (s)	0
Am	0	Pu239 (s)	0
Pu	0	Pu240 (s)	0
NO	0	Pu241 (s)	0
Si	0	H3 (s)	0
B	0	C14 (s)	0
SrCO3	0	I129 (s)	0
MnO4-	0	OFP (s)	0
Am(OH)3	0	U233 (s)	0
O	0	U235 (s)	0
O2	0	Cm243+4(s)	0
Mn	0	Np237 (s)	0
Pu(OH)4	0	Sb125 (s)	0
P2O5	0		==========
SO2	0	TOTAL	0
CO2	0	TOTAL TRU	0
I2	0	TOTAL Eu	0
N2	0	TOTAL SOLIDS	0
Co	0		
Eu	0		
Zn	0		
Mg	0		
Zr	0		
Li	0		
NO2(g)	0		
CsIX	0		
TcIX	0		
Eu(OH)3	0		
Co(OH)3	0		
SO4IX	0		
H+	0		
(TcO4)-	0		
B2O3 (s)	0		
MnO2 (s)	0		
H2O (s)	0		
ZnO (s)	0		
Li2O (s)	0		
TOC (s)	0		
Na2O (s)	0		
K2O (s)	0		
Al2O3(s)	0		
CaO (s)	0		
Cr2O3(s)	0		
Fe2O3(s)	0		
NiO (s)	0		
MgO (s)	0		
SiO2 (s)	0		
ZrO2 (s)	0		
BaO (s)	0	TOTAL PRECIPITATE	0 t/d
Anion(s)	0	TOTAL SOLIDS	0 t/d
La2O3(s)	0	TOTAL MASS	34.290E-3 t/d
PbO2 (s)	0	TOTAL VOLUME	28.910E-3 m3/d
UO3 (s)	0	DENSITY	1.186 t/m3

STREAM 97 Water Feed to LAW Scrubber

MASS:	t/d	ACTIVITY:	TBq/d
Al	0	Cs137	0
Ba	0	Sr90	0
Ca	0	Tc99	0
Cd	0	Am241	0
Cl	0	Co60	0
Cr	0	Eu154	0
F	0	Eu155	0
Fe	0	Pu238	0
Hg	0	Pu239	0
K	0	Pu240	0
La	0	Pu241	0
Ni	0	H3	0
NO2	0	C14	0
NO3	0	I129	0
OH	0	OFP	0
Pb	0	U233	0
PO4	0	U235	0
SO4	0	Cm243+4	0
TIC	0	Np237	0
TOC	0	Sb125	0
U	0	Cs137 (s)	0
Na	0	Sr90 (s)	0
H2O	16.168	Tc99 (s)	0
Cs	0	Am241 (s)	0
Sr	0	Co60 (s)	0
Tc	0	Eu154 (s)	0
NH3	0	Eu155 (s)	0
TRU	0	Pu238 (s)	0
Am	0	Pu239 (s)	0
Pu	0	Pu240 (s)	0
NO	0	Pu241 (s)	0
Si	0	H3 (s)	0
B	0	C14 (s)	0
SrCO3	0	I129 (s)	0
MnO4-	0	OFP (s)	0
Am(OH)3	0	U233 (s)	0
O	0	U235 (s)	0
O2	0	Cm243+4(s)	0
Mn	0	Np237 (s)	0
Pu(OH)4	0	Sb125 (s)	0
P2O5	0		==========
SO2	0	TOTAL	0
CO2	0	TOTAL TRU	0
I2	0	TOTAL Eu	0
N2	0	TOTAL SOLIDS	0
Co	0		
Eu	0		
Zn	0		
Mg	0		
Zr	0		
Li	0		
NO2(g)	0		
CsIX	0		
TcIX	0		
Eu(OH)3	0		
Co(OH)3	0		
SO4IX	0		
H+	0		
(TcO4)-	0		
B2O3 (s)	0		
MnO2 (s)	0		
H2O (s)	0		
ZnO (s)	0		
Li2O (s)	0		
TOC (s)	0		
Na2O (s)	0		
K2O (s)	0		
Al2O3(s)	0		
CaO (s)	0		
Cr2O3(s)	0		
Fe2O3(s)	0		
NiO (s)	0		
MgO (s)	0		
SiO2 (s)	0		
ZrO2 (s)	0		
BaO (s)	0	TOTAL PRECIPITATE	0 t/d
Anion(s)	0	TOTAL SOLIDS	0 t/d
La2O3(s)	0	TOTAL MASS	16.168 t/d
PbO2 (s)	0	TOTAL VOLUME	16.200 m3/d
UO3 (s)	0	DENSITY	0.998 t/m3

STREAM 95 NH3 Feed to LAW Melter Offgas SCR

MASS:	t/d	ACTIVITY:	TBq/d
Al	0	Cs137	0
Ba	0	Sr90	0
Ca	0	Tc99	0
Cd	0	Am241	0
Cl	0	Co60	0
Cr	0	Eu154	0
F	0	Eu155	0
Fe	0	Pu238	0
Hg	0	Pu239	0
K	0	Pu240	0
La	0	Pu241	0
Ni	0	H3	0
NO2	0	C14	0
NO3	0	I129	0
OH	0	OFP	0
Pb	0	U233	0
PO4	0	U235	0
SO4	0	Cm243+4	0
TIC	0	Np237	0
TOC	0	Sb125	0
U	0	Cs137 (s)	0
Na	0	Sr90 (s)	0
H2O	0	Tc99 (s)	0
Cs	0	Am241 (s)	0
Sr	0	Co60 (s)	0
Tc	0	Eu154 (s)	0
NH3	1.223	Eu155 (s)	0
TRU	0	Pu238 (s)	0
Am	0	Pu239 (s)	0
Pu	0	Pu240 (s)	0
NO	0	Pu241 (s)	0
Si	0	H3 (s)	0
B	0	C14 (s)	0
SrCO3	0	I129 (s)	0
MnO4-	0	OFP (s)	0
Am(OH)3	0	U233 (s)	0
O	0	U235 (s)	0
O2	0	Cm243+4(s)	0
Mn	0	Np237 (s)	0
Pu(OH)4	0	Sb125 (s)	0
P2O5	0	==========	
SO2	0	TOTAL	0
CO2	0	TOTAL TRU	0
I2	0	TOTAL Eu	0
N2	0	TOTAL SOLIDS	0
Co	0		
Eu	0		
Zn	0		
Mg	0		
Zr	0		
Li	0		
NO2(g)	0		
CsIX	0		
TcIX	0		
Eu(OH)3	0		
Co(OH)3	0		
SO4IX	0		
H+	0		
(TcO4)-	0		
B2O3 (s)	0		
MnO2 (s)	0		
H2O (s)	0		
ZnO (s)	0		
Li2O (s)	0		
TOC (s)	0		
Na2O (s)	0		
K2O (s)	0		
Al2O3(s)	0		
CaO (s)	0		
Cr2O3(s)	0		
Fe2O3(s)	0		
NiO (s)	0		
MgO (s)	0		
SiO2 (s)	0		
ZrO2 (s)	0		
BaO (s)	0	TOTAL PRECIPITATE	0 t/d
Anion(s)	0	TOTAL SOLIDS	0 t/d
La2O3(s)	0	TOTAL MASS	1.223 t/d
PbO2 (s)	0	TOTAL VOLUME	3.975E3 m3/d
UO3 (s)	0	DENSITY	307.775E-6 t/m3

STREAM 96 LAW Melter Offgas Feed to LAW Scrubber

MASS:	t/d
Al	0.0
Ba	0.0
Ca	0.0
Cd	0.0
Cl	17.428E-3
Cr	0.0
F	2.410E-3
Fe	0.0
Hg	0.0
K	134.157E-12
La	0.0
Ni	0.0
NO2	0.0
NO3	0.0
OH	0.0
Pb	0.0
PO4	0.0
SO4	0.0
TIC	0.0
TOC	0
U	0.0
Na	359.726E-12
H2O	16.568
Cs	0.0
Sr	0.0
Tc	71.501E-9
NH3	4.396E-3
TRU	0.0
Am	0.0
Pu	0.0
NO	6.871E-3
Si	0.0
B	120.363E-12
SrCO3	0.0
MnO4-	0.0
Am(OH)3	0.0
O	1.035E-9
O2	31.967
Mn	0.0
Pu(OH)4	0.0
P2O5	13.390E-6
SO2	1.631E-3
CO2	11.418
I2	2.054E-3
N2	131.300
Co	0.0
Eu	0.0
Zn	0.0
Mg	0.0
Zr	0.0
Li	0.0
NO2(g)	5.273E-3
CsIX	0.0
TcIX	0.0
Eu(OH)3	0.0
Co(OH)3	0.0
SO4IX	0.0
H+	0.0
(TcO4)-	0.0
B2O3 (s)	0.0
MnO2 (s)	0.0
H2O (s)	0.0
ZnO (s)	0.0
Li2O (s)	0.0
TOC (s)	0.0
Na2O (s)	0
K2O (s)	0.0
Al2O3(s)	0
CaO (s)	0.0
Cr2O3(s)	0.0
Fe2O3(s)	0.0
NiO (s)	0
MgO (s)	0.0
SiO2 (s)	0.0
ZrO2 (s)	0.0
BaO (s)	0.0
Anion(s)	0.0
La2O3(s)	0.0
PbO2 (s)	0.0
UO3 (s)	0.0

ACTIVITY:	TBq/d
Cs137	999.363E-9
Sr90	2.909E-9
Tc99	390.845E-6
Am241	0.0
Co60	0.0
Eu154	0.0
Eu155	0.0
Pu238	0.0
Pu239	0.0
Pu240	0.0
Pu241	0.0
H3	0.0
C14	0.0
I129	2.670E-3
OFP	0.0
U233	0.0
U235	0.0
Cm243+4	0.0
Np237	0.0
Sb125	0.0
Cs137 (s)	0.0
Sr90 (s)	0.0
Tc99 (s)	151.809E-12
Am241 (s)	0.0
Co60 (s)	0.0
Eu154 (s)	0.0
Eu155 (s)	0.0
Pu238 (s)	0.0
Pu239 (s)	0.0
Pu240 (s)	0.0
Pu241 (s)	0.0
H3 (s)	0.0
C14 (s)	0.0
I129 (s)	0.0
OFP (s)	0.0
U233 (s)	0.0
U235 (s)	0.0
Cm243+4(s)	0.0
Np237 (s)	0.0
Sb125 (s)	0.0
==========	
TOTAL	3.062E-3
TOTAL TRU	0.0
TOTAL Eu	0.0
TOTAL SOLIDS	153.189E-12

TOTAL PRECIPITATE	0.0 t/d
TOTAL SOLIDS	0.0 t/d
TOTAL MASS	191.293 t/d
TOTAL VOLUME	285.589E3 m3/d
DENSITY	669.820E-6 t/m3

STREAM 98 LAW Melter Offgas from HEPA to VOC

MASS:	t/d
Al	0.0
Ba	0.0
Ca	0.0
Cd	0.0
Cl	17.428E-3
Cr	0.0
F	2.410E-3
Fe	0.0
Hg	0.0
K	134.157E-12
La	0.0
Ni	0.0
NO2	0.0
NO3	0.0
OH	0.0
Pb	0.0
PO4	0.0
SO4	0.0
TIC	0.0
TOC	0
U	0.0
Na	359.726E-12
H2O	13.827
Cs	0.0
Sr	0.0
Tc	71.501E-9
NH3	0.507
TRU	0.0
Am	0.0
Pu	0.0
NO	2.290
Si	0.0
B	120.363E-12
SrCO3	0.0
MnO4-	0.0
Am(OH)3	0.0
O	1.035E-9
O2	31.967
Mn	0.0
Pu(OH)4	0.0
P2O5	13.390E-6
SO2	1.631E-3
CO2	11.418
I2	2.054E-3
N2	128.280
Co	0.0
Eu	0.0
Zn	0.0
Mg	0.0
Zr	0.0
Li	0.0
NO2(g)	1.758
CsIX	0.0
TcIX	0.0
Eu(OH)3	0.0
Co(OH)3	0.0
SO4IX	0.0
H+	0.0
(TcO4)-	0.0
B2O3 (s)	0.0
MnO2 (s)	0.0
H2O (s)	0.0
ZnO (s)	0.0
Li2O (s)	0.0
TOC (s)	0.0
Na2O (s)	0
K2O (s)	0.0
Al2O3(s)	0
CaO (s)	0.0
Cr2O3(s)	0.0
Fe2O3(s)	0.0
NiO (s)	0
MgO (s)	0.0
SiO2 (s)	0.0
ZrO2 (s)	0.0
BaO (s)	0.0
Anion(s)	0.0
La2O3(s)	0.0
PbO2 (s)	0.0
UO3 (s)	0.0

ACTIVITY:	TBq/d
Cs137	999.363E-9
Sr90	2.909E-9
Tc99	390.845E-6
Am241	0.0
Co60	0.0
Eu154	0.0
Eu155	0.0
Pu238	0.0
Pu239	0.0
Pu240	0.0
Pu241	0.0
H3	0.0
C14	0.0
I129	2.670E-3
OFP	0.0
U233	0.0
U235	0.0
Cm243+4	0.0
Np237	0.0
Sb125	0.0
Cs137 (s)	0.0
Sr90 (s)	0.0
Tc99 (s)	151.809E-12
Am241 (s)	0.0
Co60 (s)	0.0
Eu154 (s)	0.0
Eu155 (s)	0.0
Pu238 (s)	0.0
Pu239 (s)	0.0
Pu240 (s)	0.0
Pu241 (s)	0.0
H3 (s)	0.0
C14 (s)	0.0
I129 (s)	0.0
OFP (s)	0.0
U233 (s)	0.0
U235 (s)	0.0
Cm243+4(s)	0.0
Np237 (s)	0.0
Sb125 (s)	0.0
==========	
TOTAL	3.062E-3
TOTAL TRU	0.0
TOTAL Eu	0.0
TOTAL SOLIDS	153.189E-12

TOTAL PRECIPITATE	0.0	t/d
TOTAL SOLIDS	0.0	t/d
TOTAL MASS	190.070	t/d
TOTAL VOLUME	188.488E3	m3/d
DENSITY	1.008E-3	t/m3

STREAM 99 LAW VOC Offgas to LAW Ammonia SCR

MASS:	t/d
Al	0.0
Ba	0.0
Ca	0.0
Cd	0.0
Cl	17.428E-3
Cr	0.0
F	2.410E-3
Fe	0.0
Hg	0.0
K	134.157E-12
La	0.0
Ni	0.0
NO2	0.0
NO3	0.0
OH	0.0
Pb	0.0
PO4	0.0
SO4	0.0
TIC	0.0
TOC	0
U	0.0
Na	359.726E-12
H2O	13.827
Cs	0.0
Sr	0.0
Tc	71.501E-9
NH3	0.507
TRU	0.0
Am	0.0
Pu	0.0
NO	2.290
Si	0.0
B	120.363E-12
SrCO3	0.0
MnO4-	0.0
Am(OH)3	0.0
O	1.035E-9
O2	31.967
Mn	0.0
Pu(OH)4	0.0
P2O5	13.390E-6
SO2	1.631E-3
CO2	11.418
I2	2.054E-3
N2	128.280
Co	0.0
Eu	0.0
Zn	0.0
Mg	0.0
Zr	0.0
Li	0.0
NO2(g)	1.758
CsIX	0.0
TcIX	0.0
Eu(OH)3	0.0
Co(OH)3	0.0
SO4IX	0.0
H+	0.0
(TcO4)-	0.0
B2O3 (s)	0.0
MnO2 (s)	0.0
H2O (s)	0.0
ZnO (s)	0.0
Li2O (s)	0.0
TOC (s)	0.0
Na2O (s)	0
K2O (s)	0.0
Al2O3(s)	0
CaO (s)	0.0
Cr2O3(s)	0.0
Fe2O3(s)	0.0
NiO (s)	0
MgO (s)	0.0
SiO2 (s)	0.0
ZrO2 (s)	0.0
BaO (s)	0.0
Anion(s)	0.0
La2O3(s)	0.0
PbO2 (s)	0.0
UO3 (s)	0.0

ACTIVITY:	TBq/d
Cs137	999.363E-9
Sr90	2.909E-9
Tc99	390.845E-6
Am241	0.0
Co60	0.0
Eu154	0.0
Eu155	0.0
Pu238	0.0
Pu239	0.0
Pu240	0.0
Pu241	0.0
H3	0.0
C14	0.0
I129	2.670E-3
OFP	0.0
U233	0.0
U235	0.0
Cm243+4	0.0
Np237	0.0
Sb125	0.0
Cs137 (s)	0.0
Sr90 (s)	0.0
Tc99 (s)	151.809E-12
Am241 (s)	0.0
Co60 (s)	0.0
Eu154 (s)	0.0
Eu155 (s)	0.0
Pu238 (s)	0.0
Pu239 (s)	0.0
Pu240 (s)	0.0
Pu241 (s)	0.0
H3 (s)	0.0
C14 (s)	0.0
I129 (s)	0.0
OFP (s)	0.0
U233 (s)	0.0
U235 (s)	0.0
Cm243+4(s)	0.0
Np237 (s)	0.0
Sb125 (s)	0.0
==========	
TOTAL	3.062E-3
TOTAL TRU	0.0
TOTAL Eu	0.0
TOTAL SOLIDS	153.189E-12

TOTAL PRECIPITATE	0.0	t/d
TOTAL SOLIDS	0.0	t/d
TOTAL MASS	190.070	t/d
TOTAL VOLUME	188.488E3	m3/d
DENSITY	1.008E-3	t/m3

STREAM 107 LAW VOC Spent Catalyst

MASS:	t/d
Al	0
Ba	0
Ca	0
Cd	0
Cl	0
Cr	0
F	0
Fe	0
Hg	0
K	0
La	0
Ni	0
NO2	0
NO3	0
OH	0
Pb	0
PO4	0
SO4	0
TIC	0
TOC	0
U	0
Na	0
H2O	0
Cs	0
Sr	0
Tc	0
NH3	0
TRU	0
Am	0
Pu	0
NO	0
Si	0
B	0
SrCO3	0
MnO4-	0
Am(OH)3	0
O	0
O2	0
Mn	0
Pu(OH)4	0
P2O5	0
SO2	0
CO2	0
I2	0
N2	0
Co	0
Eu	0
Zn	0
Mg	0
Zr	0
Li	0
NO2(g)	0
CsIX	0
TcIX	0
Eu(OH)3	0.0
Co(OH)3	0
SO4IX	0
H+	0
(TcO4)-	0
B2O3 (s)	0
MnO2 (s)	0
H2O (s)	0
ZnO (s)	0
Li2O (s)	0
TOC (s)	0
Na2O (s)	0
K2O (s)	0
Al2O3(s)	0
CaO (s)	0
Cr2O3(s)	0
Fe2O3(s)	0
NiO (s)	0
MgO (s)	0
SiO2 (s)	0
ZrO2 (s)	0
BaO (s)	0
Anion(s)	0
La2O3(s)	0
PbO2 (s)	0
UO3 (s)	0

ACTIVITY:	TBq/d
Cs137	0
Sr90	0
Tc99	0
Am241	0
Co60	0
Eu154	0
Eu155	0
Pu238	0
Pu239	0
Pu240	0
Pu241	0
H3	0
C14	0
I129	0
OFP	0
U233	0
U235	0
Cm243+4	0
Np237	0
Sb125	0
Cs137 (s)	0
Sr90 (s)	0
Tc99 (s)	0
Am241 (s)	0
Co60 (s)	0
Eu154 (s)	0
Eu155 (s)	0
Pu238 (s)	0
Pu239 (s)	0
Pu240 (s)	0
Pu241 (s)	0
H3 (s)	0
C14 (s)	0
I129 (s)	0
OFP (s)	0
U233 (s)	0
U235 (s)	0
Cm243+4(s)	0
Np237 (s)	0
Sb125 (s)	0
==========	
TOTAL	0
TOTAL TRU	0
TOTAL Eu	0
TOTAL SOLIDS	0

TOTAL PRECIPITATE	0 t/d
TOTAL SOLIDS	0 t/d
TOTAL MASS	0.0 t/d
TOTAL VOLUME	0.0 m3/d
DENSITY	222.045E-9 t/m3

STREAM 176 Particulate Matter from HEPA Filter

MASS:	t/d
Al	1.178E-6
Ba	0.0
Ca	485.413E-9
Cd	101.253E-12
Cl	0
Cr	2.622E-9
F	0
Fe	399.592E-9
Hg	0
K	13.416E-6
La	0.0
Ni	518.428E-12
NO2	0
NO3	0
OH	0
Pb	3.561E-9
PO4	0
SO4	0
TIC	0
TOC	0
U	0.0
Na	35.972E-6
H2O	0
Cs	31.320E-9
Sr	0.0
Tc	643.505E-9
NH3	0
TRU	0.0
Am	0.0
Pu	112.142E-12
NO	0
Si	1.261E-6
B	12.036E-6
SrCO3	0
MnO4-	0
Am(OH)3	0
O	103.542E-6
O2	0
Mn	717.305E-12
Pu(OH)4	0
P2O5	0
SO2	0
CO2	0
I2	0
N2	0
Co	0.0
Eu	0.0
Zn	733.567E-9
Mg	152.213E-9
Zr	129.951E-9
Li	2.951E-9
NO2(g)	0
CsIX	0
TcIX	0
Eu(OH)3	0
Co(OH)3	0
SO4IX	0
H+	0
(TcO4)-	0.0
B2O3 (s)	0
MnO2 (s)	0
H2O (s)	0
ZnO (s)	0
Li2O (s)	0
TOC (s)	0
Na2O (s)	0
K2O (s)	0
Al2O3(s)	0
CaO (s)	0
Cr2O3(s)	0
Fe2O3(s)	0
NiO (s)	0
MgO (s)	0
SiO2 (s)	0
ZrO2 (s)	0
BaO (s)	0
Anion(s)	0
La2O3(s)	0
PbO2 (s)	0
UO3 (s)	0.0

ACTIVITY:	TBq/d
Cs137	99.935E-3
Sr90	290.942E-6
Tc99	3.518E-3
Am241	731.466E-9
Co60	11.838E-9
Eu154	38.893E-9
Eu155	38.893E-9
Pu238	1.860E-9
Pu239	243.156E-9
Pu240	53.581E-9
Pu241	148.439E-9
H3	0
C14	0
I129	0
OFP	2.139E-9
U233	116.029E-12
U235	0.0
Cm243+4	0.0
Np237	913.968E-12
Sb125	60.866E-9
Cs137 (s)	16.092E-9
Sr90 (s)	374.505E-12
Tc99 (s)	1.366E-9
Am241 (s)	0.0
Co60 (s)	0.0
Eu154 (s)	0.0
Eu155 (s)	0.0
Pu238 (s)	0.0
Pu239 (s)	0.0
Pu240 (s)	0.0
Pu241 (s)	0.0
H3 (s)	0
C14 (s)	0
I129 (s)	0
OFP (s)	0.0
U233 (s)	0.0
U235 (s)	0.0
Cm243+4(s)	0.0
Np237 (s)	0.0
Sb125 (s)	0.0
==========	
TOTAL	0.104
TOTAL TRU	1.031E-6
TOTAL Eu	77.785E-9
TOTAL SOLIDS	17.833E-9

TOTAL PRECIPITATE	0	t/d
TOTAL SOLIDS	0.0	t/d
TOTAL MASS	169.991E-6	t/d
TOTAL VOLUME	106.245E-6	m3/d
DENSITY	1.600	t/m3

STREAM 104 Treated Combined LAW Offgas to Stack

MASS:	t/d
Al	0.0
Ba	0.0
Ca	0.0
Cd	0.0
Cl	174.284E-6
Cr	0.0
F	24.103E-6
Fe	0.0
Hg	0.0
K	0.0
La	0.0
Ni	0.0
NO2	0.0
NO3	0.0
OH	0.0
Pb	0.0
PO4	0.0
SO4	0.0
TIC	0.0
TOC	0
U	0.0
Na	179.863E-12
H2O	4.645
Cs	0.0
Sr	0.0
Tc	35.750E-9
NH3	274.751E-6
TRU	0.0
Am	0.0
Pu	0.0
NO	6.871E-3
Si	0.0
B	0.0
SrCO3	0.0
MnO4-	0.0
Am(OH)3	0.0
O	517.715E-12
O2	31.966
Mn	0.0
Pu(OH)4	0.0
P2O5	6.695E-6
SO2	16.313E-6
CO2	9.515
I2	1.027E-3
N2	131.300
Co	0.0
Eu	0.0
Zn	0.0
Mg	0.0
Zr	0.0
Li	0.0
NO2(g)	3.296E-3
CsIX	0.0
TcIX	0.0
Eu(OH)3	0.0
Co(OH)3	0.0
SO4IX	0.0
H+	0.0
(TcO4)-	0.0
B2O3 (s)	0.0
MnO2 (s)	0.0
H2O (s)	0.0
ZnO (s)	0.0
Li2O (s)	0.0
TOC (s)	0.0
Na2O (s)	0
K2O (s)	0.0
Al2O3(s)	0
CaO (s)	0.0
Cr2O3(s)	0.0
Fe2O3(s)	0.0
NiO (s)	0
MgO (s)	0.0
SiO2 (s)	0.0
ZrO2 (s)	0.0
BaO (s)	0.0
Anion(s)	0.0
La2O3(s)	0.0
PbO2 (s)	0.0
UO3 (s)	0.0

ACTIVITY:	TBq/d
Cs137	499.681E-9
Sr90	1.455E-9
Tc99	195.422E-6
Am241	0.0
Co60	0.0
Eu154	0.0
Eu155	0.0
Pu238	0.0
Pu239	0.0
Pu240	0.0
Pu241	0.0
H3	0.0
C14	0.0
I129	26.701E-6
OFP	0.0
U233	0.0
U235	0.0
Cm243+4	0.0
Np237	0.0
Sb125	0.0
Cs137 (s)	0.0
Sr90 (s)	0.0
Tc99 (s)	0.0
Am241 (s)	0.0
Co60 (s)	0.0
Eu154 (s)	0.0
Eu155 (s)	0.0
Pu238 (s)	0.0
Pu239 (s)	0.0
Pu240 (s)	0.0
Pu241 (s)	0.0
H3 (s)	0.0
C14 (s)	0.0
I129 (s)	0.0
OFP (s)	0.0
U233 (s)	0.0
U235 (s)	0.0
Cm243+4(s)	0.0
Np237 (s)	0.0
Sb125 (s)	0.0
==========	
TOTAL	222.625E-6
TOTAL TRU	0.0
TOTAL Eu	0.0
TOTAL SOLIDS	0.0

TOTAL PRECIPITATE	0.0	t/d
TOTAL SOLIDS	0.0	t/d
TOTAL MASS	177.438	t/d
TOTAL VOLUME	256.211E3	m3/d
DENSITY	692.549E-6	t/m3

STREAM 142 Liquid Effluent from LAW Offgas Scrubber to Condensate Collection

MASS:	t/d	ACTIVITY:	TBq/d
Al	0.0	Cs137	499.681E-9
Ba	0.0	Sr90	1.455E-9
Ca	0.0	Tc99	195.422E-6
Cd	0.0	Am241	0.0
Cl	17.254E-3	Co60	0.0
Cr	0.0	Eu154	0.0
F	2.386E-3	Eu155	0.0
Fe	0.0	Pu238	0.0
Hg	0.0	Pu239	0.0
K	0.0	Pu240	0.0
La	0.0	Pu241	0.0
Ni	0.0	H3	0.0
NO2	0.0	C14	0.0
NO3	2.665E-3	I129	2.643E-3
OH	56.829E-6	OFP	0.0
Pb	0.0	U233	0.0
PO4	8.964E-6	U235	0.0
SO4	2.421E-3	Cm243+4	0.0
TIC	1.427E-3	Np237	0.0
TOC	0	Sb125	0.0
U	0.0	Cs137 (s)	0.0
Na	3.325E-3	Sr90 (s)	0.0
H2O	28.120	Tc99 (s)	0.0
Cs	0.0	Am241 (s)	0.0
Sr	0.0	Co60 (s)	0.0
Tc	35.750E-9	Eu154 (s)	0.0
NH3	4.121E-3	Eu155 (s)	0.0
TRU	0.0	Pu238 (s)	0.0
Am	0.0	Pu239 (s)	0.0
Pu	0.0	Pu240 (s)	0.0
NO	0	Pu241 (s)	0.0
Si	0.0	H3 (s)	0.0
B	0.0	C14 (s)	0.0
SrCO3	0.0	I129 (s)	0.0
MnO4-	0.0	OFP (s)	0.0
Am(OH)3	0.0	U233 (s)	0.0
O	517.715E-12	U235 (s)	0.0
O2	0	Cm243+4(s)	0.0
Mn	0.0	Np237 (s)	0.0
Pu(OH)4	0.0	Sb125 (s)	0.0
P2O5	669.502E-12		==========
SO2	161.500E-9	TOTAL	2.839E-3
CO2	1.902	TOTAL TRU	0.0
I2	1.027E-3	TOTAL Eu	0.0
N2	0	TOTAL SOLIDS	0.0
Co	0.0		
Eu	0.0		
Zn	0.0		
Mg	0.0		
Zr	0.0		
Li	0.0		
NO2(g)	197.730E-9		
CsIX	0.0		
TcIX	0.0		
Eu(OH)3	0.0		
Co(OH)3	0.0		
SO4IX	0.0		
H+	14.118E-9		
(TcO4)-	0.0		
B2O3 (s)	0.0		
MnO2 (s)	0.0		
H2O (s)	0.0		
ZnO (s)	0.0		
Li2O (s)	0.0		
TOC (s)	0.0		
Na2O (s)	0		
K2O (s)	0.0		
Al2O3(s)	0		
CaO (s)	0.0		
Cr2O3(s)	0.0		
Fe2O3(s)	0.0		
NiO (s)	0		
MgO (s)	0.0		
SiO2 (s)	0.0		
ZrO2 (s)	0.0		
BaO (s)	0.0	TOTAL PRECIPITATE	0.0 t/d
Anion(s)	0.0	TOTAL SOLIDS	0.0 t/d
La2O3(s)	0.0	TOTAL MASS	30.057 t/d
PbO2 (s)	0.0	TOTAL VOLUME	33.429 m3/d
UO3 (s)	0.0	DENSITY	0.899 t/m3

STREAM 169 Process Condensate to ETF

	MASS: t/d		ACTIVITY: TBq/d
Al	2.246E-6	Cs137	19.470E-6
Ba	120.735E-12	Sr90	150.487E-6
Ca	15.970E-6	Tc99	641.411E-6
Cd	176.437E-12	Am241	98.111E-9
Cl	18.134E-3	Co60	47.739E-6
Cr	451.894E-9	Eu154	468.398E-9
F	2.390E-3	Eu155	468.398E-9
Fe	16.295E-6	Pu238	6.049E-9
Hg	0.0	Pu239	42.789E-9
K	755.342E-6	Pu240	11.973E-9
La	130.266E-12	Pu241	482.682E-9
Ni	1.569E-6	H3	0.0
NO2	3.065E-3	C14	0.0
NO3	62.511E-3	I129	2.655E-3
OH	0.108	OFP	25.762E-9
Pb	242.244E-6	U233	1.397E-9
PO4	148.962E-6	U235	0.0
SO4	2.511E-3	Cm243+4	0.0
TIC	0.172	Np237	11.007E-9
TOC	0.359	Sb125	733.039E-9
U	245.089E-9	Cs137 (s)	0.0
Na	0.285	Sr90 (s)	0.0
H2O	211.643	Tc99 (s)	0.0
Cs	0.0	Am241 (s)	0.0
Sr	1.130E-9	Co60 (s)	0.0
Tc	576.681E-9	Eu154 (s)	0.0
NH3	6.209E-3	Eu155 (s)	0.0
TRU	500.007E-12	Pu238 (s)	0.0
Am	0.0	Pu239 (s)	0.0
Pu	0.0	Pu240 (s)	0.0
NO	0.0	Pu241 (s)	0.0
Si	66.714E-6	H3 (s)	0.0
B	65.826E-6	C14 (s)	0.0
SrCO3	0.0	I129 (s)	0.0
MnO4-	0.0	OFP (s)	0.0
Am(OH)3	0.0	U233 (s)	0.0
O	3.087E-6	U235 (s)	0.0
O2	0.0	Cm243+4(s)	0.0
Mn	8.678E-6	Np237 (s)	0.0
Pu(OH)4	0.0	Sb125 (s)	0.0
P2O5	676.628E-12		==========
SO2	161.547E-9	TOTAL	3.517E-3
CO2	2.273	TOTAL TRU	169.930E-9
I2	1.032E-3	TOTAL Eu	936.796E-9
N2	0.0	TOTAL SOLIDS	0.0
Co	0.0		
Eu	0.0		
Zn	39.363E-6		
Mg	7.349E-6		
Zr	7.738E-9		
Li	1.479E-9		
NO2(g)	2.684E-6		
CsIX	0.0		
TcIX	0.0		
Eu(OH)3	0.0		
Co(OH)3	0.0		
SO4IX	0.0		
H+	0.0		
(TcO4)-	33.827E-9		
B2O3 (s)	0.0		
MnO2 (s)	0.0		
H2O (s)	0.0		
ZnO (s)	0.0		
Li2O (s)	0.0		
TOC (s)	0.0		
Na2O (s)	0.0		
K2O (s)	0.0		
Al2O3(s)	0		
CaO (s)	0.0		
Cr2O3(s)	0.0		
Fe2O3(s)	0.0		
NiO (s)	0		
MgO (s)	0.0		
SiO2 (s)	0.0		
ZrO2 (s)	0.0		
BaO (s)	0.0	TOTAL PRECIPITATE	0.0 t/d
Anion(s)	0.0	TOTAL SOLIDS	0.0 t/d
La2O3(s)	0.0	TOTAL MASS	214.937 t/d
PbO2 (s)	0.0	TOTAL VOLUME	238.827 m3/d
UO3 (s)	0.0	DENSITY	0.900 t/m3

STREAM 109 Sr/TRU LAW Product Feed to HLW Treatment

MASS:	t/d
Al	19.352E-6
Ba	0
Ca	9.299E-6
Cd	840.982E-9
Cl	6.676E-6
Cr	2.679E-6
F	7.210E-6
Fe	24.492E-6
Hg	0
K	32.943E-6
La	0
Ni	7.038E-6
NO2	769.926E-6
NO3	3.897E-3
OH	541.916E-6
Pb	5.027E-6
PO4	17.743E-6
SO4	30.304E-6
TIC	1.201E-3
TOC	260.088E-6
U	0
Na	3.846E-3
H2O	0.394
Cs	738.445E-9
Sr	1.183E-6
Tc	1.048E-6
NH3	16.146E-6
TRU	0
Am	0
Pu	0
NO	0
Si	2.637E-6
B	776.672E-9
SrCO3	20.145E-3
MnO4-	44.945E-6
Am(OH)3	0
O	6.048E-6
O2	0
Mn	7.896E-6
Pu(OH)4	1.154E-6
P2O5	0
SO2	0
CO2	0
I2	716.409E-9
N2	0
Co	0
Eu	0
Zn	540.118E-9
Mg	0
Zr	1.126E-6
Li	0
NO2(g)	0
CsIX	0
TcIX	0
Sugar	0
Co(OH)3	0
SO4IX	0
H+	0
(TcO4)-	765.429E-9
B2O3 (s)	0
MnO2 (s)	5.326E-3
H2O (s)	1.957E-6
ZnO (s)	10.948E-6
Li2O (s)	0
TOC (s)	16.727E-3
Na2O (s)	24.686E-3
K2O (s)	106.415E-6
Al2O3(s)	1.888E-3
CaO (s)	69.100E-6
Cr2O3(s)	140.404E-6
Fe2O3(s)	1.708E-3
NiO (s)	47.381E-6
MgO (s)	6.672E-6
SiO2 (s)	98.030E-6
ZrO2 (s)	36.934E-6
BaO (s)	6.719E-6
Anion(s)	272.747E-6
La2O3(s)	17.331E-6
PbO2 (s)	111.234E-6
UO3 (s)	0

ACTIVITY:	TBq/d
Cs137	0.582
Sr90	943.969E-6
Tc99	988.042E-6
Am241	32.627E-6
Co60	50.665E-6
Eu154	294.233E-6
Eu155	292.472E-6
Pu238	652.099E-9
Pu239	2.096E-6
Pu240	584.640E-9
Pu241	23.512E-6
H3	0
C14	0
I129	931.377E-9
OFP	0
U233	0
U235	0
Cm243+4	0
Np237	0
Sb125	55.100E-6
Cs137 (s)	0.820
Sr90 (s)	10.501
Tc99 (s)	332.563E-6
Am241 (s)	38.925E-3
Co60 (s)	13.592E-6
Eu154 (s)	6.555E-3
Eu155 (s)	4.094E-3
Pu238 (s)	816.697E-6
Pu239 (s)	2.513E-3
Pu240 (s)	701.568E-6
Pu241 (s)	28.205E-3
H3 (s)	0
C14 (s)	0
I129 (s)	0
OFP (s)	856.273E-9
U233 (s)	0
U235 (s)	0
Cm243+4(s)	176.256E-6
Np237 (s)	445.320E-6
Sb125 (s)	43.495E-6
==========	==========
TOTAL	11.989
TOTAL TRU	43.437E-3
TOTAL Eu	11.236E-3
TOTAL SOLIDS	11.404

TOTAL PRECIPITATE	20.146E-3 t/d
TOTAL SOLIDS	51.261E-3 t/d
TOTAL MASS	0.476 t/d
TOTAL VOLUME	0.450 m3/d
DENSITY	1.059 t/m3

STREAM 114 Combined Cesium/Technetium LAW Product Feed to HLW Treatment

MASS:	t/d
Al	0.0
Ba	0.0
Ca	0.0
Cd	0.0
Cl	0.0
Cr	0.0
F	0.0
Fe	0.0
Hg	0.0
K	1.012E-3
La	0.0
Ni	0.0
NO2	0.0
NO3	0.143
OH	0.0
Pb	0.0
PO4	0.0
SO4	0.0
TIC	0.0
TOC	0.0
U	0.0
Na	22.620E-3
H2O	0.370
Cs	2.150E-3
Sr	0.0
Tc	0.0
NH3	0.0
TRU	0.0
Am	0.0
Pu	0.0
NO	0.0
Si	0.0
B	0.0
SrCO3	0.0
MnO4-	0.0
Am(OH)3	0.0
O	0.0
O2	0.0
Mn	0.0
Pu(OH)4	0.0
P2O5	0.0
SO2	0.0
CO2	0.0
I2	0.0
N2	0.0
Co	0.0
Eu	0.0
Zn	0.0
Mg	0.0
Zr	0.0
Li	0.0
NO2(g)	0.0
CsIX	0.0
TcIX	0.0
Sugar	0.0
Co(OH)3	0.0
SO4IX	0.0
H+	1.340E-3
(TcO4)-	9.992E-3
B2O3 (s)	0.0
MnO2 (s)	0.0
H2O (s)	0.0
ZnO (s)	0.0
Li2O (s)	0.0
TOC (s)	0.0
Na2O (s)	0.0
K2O (s)	0.0
Al2O3(s)	0.0
CaO (s)	0.0
Cr2O3(s)	0.0
Fe2O3(s)	0.0
NiO (s)	0.0
MgO (s)	0.0
SiO2 (s)	0.0
ZrO2 (s)	0.0
BaO (s)	0.0
Anion(s)	0.0
La2O3(s)	0.0
PbO2 (s)	0.0
UO3 (s)	0.0

ACTIVITY:	TBq/d
Cs137	1.720E3
Sr90	0
Tc99	3.792
Am241	0
Co60	0
Eu154	0
Eu155	0
Pu238	0
Pu239	0
Pu240	0
Pu241	0
H3	0
C14	0
I129	0
OFP	0
U233	0
U235	0
Cm243+4	0
Np237	0
Sb125	0
Cs137 (s)	0
Sr90 (s)	0
Tc99 (s)	0
Am241 (s)	0
Co60 (s)	0
Eu154 (s)	0
Eu155 (s)	0
Pu238 (s)	0
Pu239 (s)	0
Pu240 (s)	0
Pu241 (s)	0
H3 (s)	0
C14 (s)	0
I129 (s)	0
OFP (s)	0
U233 (s)	0
U235 (s)	0
Cm243+4(s)	0
Np237 (s)	0
Sb125 (s)	0
==========	
TOTAL	1.724E3
TOTAL TRU	0
TOTAL Eu	0
TOTAL SOLIDS	0

TOTAL PRECIPITATE	0.0 t/d
TOTAL SOLIDS	0.0 t/d
TOTAL MASS	0.550 t/d
TOTAL VOLUME	0.360 m3/d
DENSITY	1.526 t/m3

STREAM 186 19M NaOH Feed to Combined Cesium/Technetium LAW Product

MASS:	t/d
Al	0
Ba	0
Ca	0
Cd	0
Cl	0
Cr	0
F	0
Fe	0
Hg	0
K	0
La	0
Ni	0
NO2	0
NO3	0
OH	22.782E-3
Pb	0
PO4	0
SO4	0
TIC	0
TOC	0
U	0
Na	30.823E-3
H2O	53.746E-3
Cs	0
Sr	0
Tc	0
NH3	0
TRU	0
Am	0
Pu	0
NO	0
Si	0
B	0
SrCO3	0
MnO4-	0
Am(OH)3	0
O	0
O2	0
Mn	0
Pu(OH)4	0
P2O5	0
SO2	0
CO2	0
I2	0
N2	0
Co	0
Eu	0
Zn	0
Mg	0
Zr	0
Li	0
NO2(g)	0
CsIX	0
TcIX	0
Sugar	0
Co(OH)3	0
SO4IX	0
H+	0
(TcO4)-	0
B2O3 (s)	0
MnO2 (s)	0
H2O (s)	0
ZnO (s)	0
Li2O (s)	0
TOC (s)	0
Na2O (s)	0
K2O (s)	0
Al2O3(s)	0
CaO (s)	0
Cr2O3(s)	0
Fe2O3(s)	0
NiO (s)	0
MgO (s)	0
SiO2 (s)	0
ZrO2 (s)	0
BaO (s)	0
Anion(s)	0
La2O3(s)	0
PbO2 (s)	0
UO3 (s)	0

ACTIVITY:	TBq/d
Cs137	0
Sr90	0
Tc99	0
Am241	0
Co60	0
Eu154	0
Eu155	0
Pu238	0
Pu239	0
Pu240	0
Pu241	0
H3	0
C14	0
I129	0
OFP	0
U233	0
U235	0
Cm243+4	0
Np237	0
Sb125	0
Cs137 (s)	0
Sr90 (s)	0
Tc99 (s)	0
Am241 (s)	0
Co60 (s)	0
Eu154 (s)	0
Eu155 (s)	0
Pu238 (s)	0
Pu239 (s)	0
Pu240 (s)	0
Pu241 (s)	0
H3 (s)	0
C14 (s)	0
I129 (s)	0
OFP (s)	0
U233 (s)	0
U235 (s)	0
Cm243+4(s)	0
Np237 (s)	0
Sb125 (s)	0
TOTAL	0
TOTAL TRU	0
TOTAL Eu	0
TOTAL SOLIDS	0

TOTAL PRECIPITATE	0	t/d
TOTAL SOLIDS	0	t/d
TOTAL MASS	0.107	t/d
TOTAL VOLUME	70.533E-3	m3/d
DENSITY	1.522	t/m3

STREAM 187 Neutralised Cesium/Technetium LAW Product Feed to HLW Treatment

MASS:	t/d
Al	0.0
Ba	0.0
Ca	0.0
Cd	0.0
Cl	0.0
Cr	0.0
F	0.0
Fe	0.0
Hg	0.0
K	1.012E-3
La	0.0
Ni	0.0
NO2	0.0
NO3	0.143
OH	2.278E-6
Pb	0.0
PO4	0.0
SO4	0.0
TIC	0.0
TOC	0.0
U	0.0
Na	53.443E-3
H2O	0.447
Cs	2.150E-3
Sr	0.0
Tc	0.0
NH3	0.0
TRU	0.0
Am	0.0
Pu	0.0
NO	0.0
Si	0.0
B	0.0
SrCO3	0.0
MnO4-	0.0
Am(OH)3	0.0
O	0.0
O2	0.0
Mn	0.0
Pu(OH)4	0.0
P2O5	0.0
SO2	0.0
CO2	0.0
I2	0.0
N2	0.0
Co	0.0
Eu	0.0
Zn	0.0
Mg	0.0
Zr	0.0
Li	0.0
NO2(g)	0.0
CsIX	0.0
TcIX	0.0
Sugar	0.0
Co(OH)3	0.0
SO4IX	0.0
H+	134.013E-9
(TcO4)-	9.992E-3
B2O3 (s)	0.0
MnO2 (s)	0.0
H2O (s)	0.0
ZnO (s)	0.0
Li2O (s)	0.0
TOC (s)	0.0
Na2O (s)	0.0
K2O (s)	0.0
Al2O3(s)	0.0
CaO (s)	0.0
Cr2O3(s)	0.0
Fe2O3(s)	0.0
NiO (s)	0.0
MgO (s)	0.0
SiO2 (s)	0.0
ZrO2 (s)	0.0
BaO (s)	0.0
Anion(s)	0.0
La2O3(s)	0.0
PbO2 (s)	0.0
UO3 (s)	0.0

ACTIVITY:	TBq/d
Cs137	1.720E3
Sr90	0
Tc99	3.792
Am241	0
Co60	0
Eu154	0
Eu155	0
Pu238	0
Pu239	0
Pu240	0
Pu241	0
H3	0
C14	0
I129	0
OFP	0
U233	0
U235	0
Cm243+4	0
Np237	0
Sb125	0
Cs137 (s)	0
Sr90 (s)	0
Tc99 (s)	0
Am241 (s)	0
Co60 (s)	0
Eu154 (s)	0
Eu155 (s)	0
Pu238 (s)	0
Pu239 (s)	0
Pu240 (s)	0
Pu241 (s)	0
H3 (s)	0
C14 (s)	0
I129 (s)	0
OFP (s)	0
U233 (s)	0
U235 (s)	0
Cm243+4(s)	0
Np237 (s)	0
Sb125 (s)	0
==========	
TOTAL	1.724E3
TOTAL TRU	0
TOTAL Eu	0
TOTAL SOLIDS	0

TOTAL PRECIPITATE	0.0 t/d
TOTAL SOLIDS	0.0 t/d
TOTAL MASS	0.657 t/d
TOTAL VOLUME	0.556 m3/d
DENSITY	1.181 t/m3

STREAM 115 Combined Sr/TRU/Cs/Tc LAW Product Feed to HLW Treatment

MASS:	t/d
Al	19.352E-6
Ba	0.0
Ca	9.299E-6
Cd	840.980E-9
Cl	6.676E-6
Cr	2.679E-6
F	7.210E-6
Fe	24.492E-6
Hg	0.0
K	1.045E-3
La	0.0
Ni	7.038E-6
NO2	769.926E-6
NO3	0.147
OH	544.195E-6
Pb	5.027E-6
PO4	17.743E-6
SO4	30.304E-6
TIC	1.201E-3
TOC	260.088E-6
U	0.0
Na	57.290E-3
H2O	0.842
Cs	2.151E-3
Sr	1.183E-6
Tc	1.048E-6
NH3	16.146E-6
TRU	0.0
Am	0.0
Pu	0.0
NO	0.0
Si	2.637E-6
B	776.669E-9
SrCO3	20.145E-3
MnO4-	44.945E-6
Am(OH)3	0.0
O	6.048E-6
O2	0.0
Mn	7.896E-6
Pu(OH)4	1.154E-6
P2O5	0.0
SO2	0.0
CO2	0.0
I2	716.406E-9
N2	0.0
Co	0.0
Eu	0.0
Zn	540.115E-9
Mg	0.0
Zr	1.126E-6
Li	0.0
NO2(g)	0.0
CsIX	0.0
TcIX	0.0
Sugar	0.0
Co(OH)3	0.0
SO4IX	0.0
H+	134.013E-9
(TcO4)-	9.993E-3
B2O3 (s)	0.0
MnO2 (s)	5.326E-3
H2O (s)	1.957E-6
ZnO (s)	10.948E-6
Li2O (s)	0.0
TOC (s)	16.727E-3
Na2O (s)	24.686E-3
K2O (s)	106.415E-6
Al2O3(s)	1.888E-3
CaO (s)	69.100E-6
Cr2O3(s)	140.404E-6
Fe2O3(s)	1.708E-3
NiO (s)	47.381E-6
MgO (s)	6.672E-6
SiO2 (s)	98.030E-6
ZrO2 (s)	36.934E-6
BaO (s)	6.719E-6
Anion(s)	272.747E-6
La2O3(s)	17.331E-6
PbO2 (s)	111.234E-6
UO3 (s)	0.0

ACTIVITY:	TBq/d
Cs137	1.721E3
Sr90	943.969E-6
Tc99	3.793
Am241	32.627E-6
Co60	50.665E-6
Eu154	294.233E-6
Eu155	292.472E-6
Pu238	652.099E-9
Pu239	2.096E-6
Pu240	584.640E-9
Pu241	23.512E-6
H3	0
C14	0
I129	931.377E-9
OFP	0
U233	0
U235	0
Cm243+4	0
Np237	0
Sb125	55.100E-6
Cs137 (s)	0.820
Sr90 (s)	10.501
Tc99 (s)	332.563E-6
Am241 (s)	38.925E-3
Co60 (s)	13.592E-6
Eu154 (s)	6.555E-3
Eu155 (s)	4.094E-3
Pu238 (s)	816.697E-6
Pu239 (s)	2.513E-3
Pu240 (s)	701.568E-6
Pu241 (s)	28.205E-3
H3 (s)	0
C14 (s)	0
I129 (s)	0
OFP (s)	856.273E-9
U233 (s)	0
U235 (s)	0
Cm243+4(s)	176.256E-6
Np237 (s)	445.320E-6
Sb125 (s)	43.495E-6
==========	==========
TOTAL	1.736E3
TOTAL TRU	43.437E-3
TOTAL Eu	11.236E-3
TOTAL SOLIDS	11.404

TOTAL PRECIPITATE	20.146E-3 t/d
TOTAL SOLIDS	51.261E-3 t/d
TOTAL MASS	1.133 t/d
TOTAL VOLUME	1.008 m3/d
DENSITY	1.124 t/m3

STREAM 18 HLW Feed (Envelope D)

MASS:	t/d
Al	0.449
Ba	0
Ca	224.383E-6
Cd	0
Cl	78.782E-3
Cr	3.182E-3
F	15.782E-3
Fe	389.186E-6
Hg	0
K	0.522
La	0
Ni	299.615E-6
NO2	1.488
NO3	2.555
OH	1.024
Pb	1.540E-3
PO4	28.010E-3
SO4	24.069E-3
TIC	0.275
TOC	0.150
U	0
Na	3.646
H2O	46.793
Cs	852.018E-6
Sr	4.471E-6
Tc	87.926E-6
NH3	0.208
TRU	101.249E-6
Am	215.824E-9
Pu	15.165E-6
NO	0
Si	5.078E-3
B	0
SrCO3	0
MnO4-	0
Am(OH)3	0
O	0
O2	0
Mn	1.645E-3
Pu(OH)4	0
P2O5	0
SO2	0
CO2	0
I2	841.348E-6
N2	0
Co	230.224E-12
Eu	15.300E-9
Zn	3.338E-3
Mg	554.675E-6
Zr	669.339E-6
Li	0
NO2(g)	0
CsIX	0
TcIX	0
Sugar	0
Co(OH)3	0
SO4IX	0
H+	0
(TcO4)-	2.751E-3
B2O3 (s)	0
MnO2 (s)	83.886E-3
H2O (s)	0.519
ZnO (s)	0
Li2O (s)	0
TOC (s)	37.853E-3
Na2O (s)	60.949E-3
K2O (s)	10.620E-3
Al2O3(s)	0.278
CaO (s)	8.084E-3
Cr2O3(s)	3.012E-3
Fe2O3(s)	0.340
NiO (s)	17.579E-3
MgO (s)	0
SiO2 (s)	4.676E-3
ZrO2 (s)	0.113
BaO (s)	0
Anion(s)	61.076E-3
La2O3(s)	10.605E-3
PbO2 (s)	4.977E-3
UO3 (s)	29.785E-3

ACTIVITY:	TBq/d
Cs137	681.614
Sr90	6.975
Tc99	1.125
Am241	28.057E-3
Co60	9.669E-3
Eu154	95.109E-3
Eu155	95.109E-3
Pu238	4.549E-3
Pu239	32.179E-3
Pu240	9.004E-3
Pu241	0.363
H3	0
C14	0
I129	1.094E-3
OFP	5.231E-3
U233	283.742E-6
U235	6.166E-6
Cm243+4	0
Np237	2.235E-3
Sb125	0.149
Cs137 (s)	535.922
Sr90 (s)	3.573E3
Tc99 (s)	5.359
Am241 (s)	32.155
Co60 (s)	3.573
Eu154 (s)	18.579
Eu155 (s)	10.361
Pu238 (s)	0.125
Pu239 (s)	1.108
Pu240 (s)	0.318
Pu241 (s)	7.860
H3 (s)	23.223E-3
C14 (s)	2.322E-3
I129 (s)	103.612E-6
OFP (s)	0.225
U233 (s)	321.553E-6
U235 (s)	89.320E-6
Cm243+4(s)	1.072
Np237 (s)	26.439E-3
Sb125 (s)	11.433
TOTAL	4.891E3
TOTAL TRU	33.808
TOTAL Eu	29.130
TOTAL SOLIDS	4.201E3

TOTAL PRECIPITATE	0	t/d
TOTAL SOLIDS	1.584	t/d
TOTAL MASS	58.862	t/d
TOTAL VOLUME	52.838	m3/d
DENSITY	1.114	t/m3

STREAM 170 HLW SBS Recycle to HLW Pretreatment

	MASS: t/d		ACTIVITY: TBq/d
Al	1.530E-3	Cs137	57.702
Ba	60.182E-9	Sr90	810.404E-6
Ca	58.395E-6	Tc99	1.272
Cd	84.137E-9	Am241	2.288E-6
Cl	267.452E-6	Co60	0
Cr	21.915E-6	Eu154	6.258E-6
F	41.620E-6	Eu155	6.249E-6
Fe	1.194E-3	Pu238	232.234E-9
Hg	0.0	Pu239	1.858E-6
K	760.795E-6	Pu240	505.486E-9
La	65.337E-6	Pu241	18.388E-6
Ni	46.201E-6	H3	0.0
NO2	0.0	C14	0
NO3	38.741E-3	I129	0
OH	0.0	OFP	263.271E-9
Pb	23.721E-6	U233	14.280E-9
PO4	302.570E-6	U235	310.341E-12
SO4	274.641E-6	Cm243+4	0
TIC	0.0	Np237	112.489E-9
TOC	0.0	Sb125	7.767E-6
U	123.924E-6	Cs137 (s)	0
Na	2.472E-3	Sr90 (s)	0.0
H2O	7.476	Tc99 (s)	0
Cs	72.029E-6	Am241 (s)	0
Sr	119.583E-6	Co60 (s)	0
Tc	647.914E-9	Eu154 (s)	0
NH3	0	Eu155 (s)	0
TRU	5.106E-9	Pu238 (s)	0
Am	0.0	Pu239 (s)	0
Pu	5.364E-9	Pu240 (s)	0
NO	0	Pu241 (s)	0
Si	1.909E-3	H3 (s)	0
B	2.775E-3	C14 (s)	0
SrCO3	0.0	I129 (s)	0
MnO4-	0.0	OFP (s)	0
Am(OH)3	0.0	U233 (s)	0
O	12.711E-3	U235 (s)	0
O2	0	Cm243+4(s)	0
Mn	281.912E-6	Np237 (s)	0
Pu(OH)4	0	Sb125 (s)	0
P2O5	553.911E-12		==========
SO2	2.250E-9	TOTAL	58.975
CO2	0	TOTAL TRU	4.884E-6
I2	0	TOTAL Eu	12.507E-6
N2	0	TOTAL SOLIDS	0.0
Co	0.0		
Eu	0.0		
Zn	431.262E-6		
Mg	48.034E-9		
Zr	279.138E-6		
Li	746.916E-6		
NO2(g)	2.642E-6		
CsIX	0.0		
TcIX	0.0		
Sugar	0.0		
Co(OH)3	0.0		
SO4IX	0.0		
H+	448.421E-6		
(TcO4)-	3.351E-3		
B2O3 (s)	0		
MnO2 (s)	0		
H2O (s)	0		
ZnO (s)	0		
Li2O (s)	0		
TOC (s)	0		
Na2O (s)	0		
K2O (s)	0		
Al2O3(s)	0		
CaO (s)	0		
Cr2O3(s)	0		
Fe2O3(s)	0		
NiO (s)	0		
MgO (s)	0		
SiO2 (s)	0		
ZrO2 (s)	0		
BaO (s)	0	TOTAL PRECIPITATE	0.0 t/d
Anion(s)	0	TOTAL SOLIDS	0.0 t/d
La2O3(s)	0	TOTAL MASS	7.545 t/d
PbO2 (s)	0	TOTAL VOLUME	7.474 m3/d
UO3 (s)	0.0	DENSITY	1.010 t/m3

STREAM 171 HLW Feed to Dewatering

MASS:	t/d
Al	0.451
Ba	60.182E-9
Ca	282.778E-6
Cd	84.137E-9
Cl	79.049E-3
Cr	3.204E-3
F	15.823E-3
Fe	1.583E-3
Hg	0.0
K	0.523
La	65.337E-6
Ni	345.816E-6
NO2	1.488
NO3	2.594
OH	1.016
Pb	1.564E-3
PO4	28.312E-3
SO4	24.343E-3
TIC	0.275
TOC	0.150
U	123.924E-6
Na	3.648
H2O	54.277
Cs	924.047E-6
Sr	124.054E-6
Tc	88.574E-6
NH3	0.208
TRU	101.255E-6
Am	215.840E-9
Pu	15.171E-6
NO	0
Si	6.987E-3
B	2.775E-3
SrCO3	0.0
MnO4-	0.0
Am(OH)3	0.0
O	12.711E-3
O2	0
Mn	1.927E-3
Pu(OH)4	0
P2O5	553.911E-12
SO2	2.250E-9
CO2	0
I2	841.348E-6
N2	0
Co	230.265E-12
Eu	15.300E-9
Zn	3.769E-3
Mg	554.723E-6
Zr	948.477E-6
Li	746.916E-6
NO2(g)	2.642E-6
CsIX	0.0
TcIX	0.0
Sugar	0.0
Co(OH)3	0.0
SO4IX	0.0
H+	44.842E-9
(TcO4)-	6.101E-3
B2O3 (s)	0
MnO2 (s)	83.886E-3
H2O (s)	0.519
ZnO (s)	0
Li2O (s)	0
TOC (s)	37.853E-3
Na2O (s)	60.949E-3
K2O (s)	10.620E-3
Al2O3(s)	0.278
CaO (s)	8.084E-3
Cr2O3(s)	3.012E-3
Fe2O3(s)	0.340
NiO (s)	17.579E-3
MgO (s)	0
SiO2 (s)	4.676E-3
ZrO2 (s)	0.113
BaO (s)	0
Anion(s)	61.076E-3
La2O3(s)	10.605E-3
PbO2 (s)	4.977E-3
UO3 (s)	29.785E-3

ACTIVITY:	TBq/d
Cs137	739.316
Sr90	6.975
Tc99	2.398
Am241	28.059E-3
Co60	9.669E-3
Eu154	95.115E-3
Eu155	95.115E-3
Pu238	4.550E-3
Pu239	32.180E-3
Pu240	9.004E-3
Pu241	0.363
H3	0
C14	0
I129	1.094E-3
OFP	5.231E-3
U233	283.756E-6
U235	6.167E-6
Cm243+4	0
Np237	2.235E-3
Sb125	0.149
Cs137 (s)	535.922
Sr90 (s)	3.573E3
Tc99 (s)	5.359
Am241 (s)	32.155
Co60 (s)	3.573
Eu154 (s)	18.579
Eu155 (s)	10.361
Pu238 (s)	0.125
Pu239 (s)	1.108
Pu240 (s)	0.318
Pu241 (s)	7.860
H3 (s)	23.223E-3
C14 (s)	2.322E-3
I129 (s)	103.612E-6
OFP (s)	0.225
U233 (s)	321.553E-6
U235 (s)	89.320E-6
Cm243+4(s)	1.072
Np237 (s)	26.439E-3
Sb125 (s)	11.433
TOTAL	4.950E3
TOTAL TRU	33.808
TOTAL Eu	29.130
TOTAL SOLIDS	4.201E3

TOTAL PRECIPITATE	0.0 t/d
TOTAL SOLIDS	1.584 t/d
TOTAL MASS	66.407 t/d
TOTAL VOLUME	58.871 m3/d
DENSITY	1.128 t/m3

STREAM 200 Permeate from HLW Feed Dewatering to LAW Treatment

MASS:	t/d
Al	0.400
Ba	53.388E-9
Ca	250.855E-6
Cd	74.638E-9
Cl	70.125E-3
Cr	2.842E-3
F	14.037E-3
Fe	1.404E-3
Hg	0.0
K	0.464
La	57.961E-6
Ni	306.777E-6
NO2	1.320
NO3	2.301
OH	0.902
Pb	1.388E-3
PO4	25.116E-3
SO4	21.595E-3
TIC	0.244
TOC	0.133
U	109.934E-6
Na	3.236
H2O	49.133
Cs	819.729E-6
Sr	110.050E-6
Tc	78.575E-6
NH3	0.184
TRU	89.824E-6
Am	191.474E-9
Pu	13.458E-6
NO	0.0
Si	6.198E-3
B	2.462E-3
SrCO3	0.0
MnO4-	0.0
Am(OH)3	0.0
O	11.276E-3
O2	0.0
Mn	1.709E-3
Pu(OH)4	0
P2O5	491.379E-12
SO2	1.996E-9
CO2	0.0
I2	746.367E-6
N2	0.0
Co	204.269E-12
Eu	13.573E-9
Zn	3.344E-3
Mg	492.099E-6
Zr	841.402E-6
Li	662.595E-6
NO2(g)	2.343E-6
CsIX	0.0
TcIX	0.0
Sugar	0.0
Co(OH)3	0.0
SO4IX	0.0
H+	39.780E-9
(TcO4)-	5.413E-3
B2O3 (s)	0
MnO2 (s)	8.388E-6
H2O (s)	51.923E-6
ZnO (s)	0
Li2O (s)	0
TOC (s)	3.785E-6
Na2O (s)	6.094E-6
K2O (s)	1.062E-6
Al2O3(s)	27.844E-6
CaO (s)	808.345E-9
Cr2O3(s)	301.148E-9
Fe2O3(s)	33.987E-6
NiO (s)	1.758E-6
MgO (s)	0
SiO2 (s)	467.572E-9
ZrO2 (s)	11.307E-6
BaO (s)	0
Anion(s)	6.107E-6
La2O3(s)	1.060E-6
PbO2 (s)	497.687E-9
UO3 (s)	2.978E-6

ACTIVITY:	TBq/d
Cs137	655.853
Sr90	6.188
Tc99	2.127
Am241	24.892E-3
Co60	8.578E-3
Eu154	84.377E-3
Eu155	84.377E-3
Pu238	4.036E-3
Pu239	28.547E-3
Pu240	7.988E-3
Pu241	0.322
H3	0
C14	0
I129	970.277E-6
OFP	4.641E-3
U233	251.722E-6
U235	5.470E-6
Cm243+4	0
Np237	1.983E-3
Sb125	0.132
Cs137 (s)	53.567E-3
Sr90 (s)	0.357
Tc99 (s)	535.674E-6
Am241 (s)	3.214E-3
Co60 (s)	357.116E-6
Eu154 (s)	1.857E-3
Eu155 (s)	1.036E-3
Pu238 (s)	12.499E-6
Pu239 (s)	110.706E-6
Pu240 (s)	31.783E-6
Pu241 (s)	785.655E-6
H3 (s)	2.321E-6
C14 (s)	232.125E-9
I129 (s)	10.356E-9
OFP (s)	22.498E-6
U233 (s)	32.140E-9
U235 (s)	8.928E-9
Cm243+4(s)	107.135E-6
Np237 (s)	2.643E-6
Sb125 (s)	1.143E-3
==========	
TOTAL	665.293
TOTAL TRU	70.817E-3
TOTAL Eu	0.172
TOTAL SOLIDS	0.420

TOTAL PRECIPITATE	0.0 t/d
TOTAL SOLIDS	158.367E-6 t/d
TOTAL MASS	58.489 t/d
TOTAL VOLUME	52.225 m3/d
DENSITY	1.120 t/m3

STREAM 201 Concentrate from HLW Feed Dewatering to HLW Treatment

MASS:	t/d
Al	50.905E-3
Ba	6.794E-9
Ca	31.923E-6
Cd	9.498E-9
Cl	8.924E-3
Cr	361.664E-6
F	1.786E-3
Fe	178.694E-6
Hg	0.0
K	59.070E-3
La	7.376E-6
Ni	39.040E-6
NO2	0.168
NO3	0.293
OH	0.115
Pb	176.576E-6
PO4	3.196E-3
SO4	2.748E-3
TIC	31.030E-3
TOC	16.895E-3
U	13.990E-6
Na	0.412
H2O	5.144
Cs	104.318E-6
Sr	14.005E-6
Tc	9.999E-6
NH3	23.455E-3
TRU	11.431E-6
Am	24.367E-9
Pu	1.713E-6
NO	0.0
Si	788.763E-6
B	313.329E-6
SrCO3	0.0
MnO4-	0.0
Am(OH)3	0.0
O	1.435E-3
O2	0.0
Mn	217.507E-6
Pu(OH)4	0
P2O5	0.0
SO2	253.976E-12
CO2	0.0
I2	94.982E-6
N2	0.0
Co	0.0
Eu	1.727E-9
Zn	425.535E-6
Mg	62.624E-6
Zr	107.076E-6
Li	84.321E-6
NO2(g)	298.221E-9
CsIX	0.0
TcIX	0.0
Sugar	0.0
Co(OH)3	0.0
SO4IX	0.0
H+	5.062E-9
(TcO4)-	688.806E-6
B2O3 (s)	0
MnO2 (s)	83.878E-3
H2O (s)	0.519
ZnO (s)	0
Li2O (s)	0
TOC (s)	37.850E-3
Na2O (s)	60.943E-3
K2O (s)	10.619E-3
Al2O3(s)	0.278
CaO (s)	8.083E-3
Cr2O3(s)	3.011E-3
Fe2O3(s)	0.340
NiO (s)	17.578E-3
MgO (s)	0
SiO2 (s)	4.676E-3
ZrO2 (s)	0.113
BaO (s)	0
Anion(s)	61.070E-3
La2O3(s)	10.604E-3
PbO2 (s)	4.977E-3
UO3 (s)	29.782E-3

ACTIVITY:	TBq/d
Cs137	83.463
Sr90	0.787
Tc99	0.271
Am241	3.168E-3
Co60	1.092E-3
Eu154	10.738E-3
Eu155	10.738E-3
Pu238	513.615E-6
Pu239	3.633E-3
Pu240	1.016E-3
Pu241	40.982E-3
H3	0
C14	0
I129	123.476E-6
OFP	590.567E-6
U233	32.034E-6
U235	696.153E-9
Cm243+4	0
Np237	252.333E-6
Sb125	16.804E-3
Cs137 (s)	535.868
Sr90 (s)	3.572E3
Tc99 (s)	5.359
Am241 (s)	32.152
Co60 (s)	3.572
Eu154 (s)	18.577
Eu155 (s)	10.360
Pu238 (s)	0.125
Pu239 (s)	1.107
Pu240 (s)	0.318
Pu241 (s)	7.859
H3 (s)	23.221E-3
C14 (s)	2.322E-3
I129 (s)	103.601E-6
OFP (s)	0.225
U233 (s)	321.521E-6
U235 (s)	89.311E-6
Cm243+4(s)	1.072
Np237 (s)	26.436E-3
Sb125 (s)	11.432
TOTAL	4.285E3
TOTAL TRU	33.738
TOTAL Eu	28.958
TOTAL SOLIDS	4.201E3

TOTAL PRECIPITATE	0.0 t/d
TOTAL SOLIDS	1.584 t/d
TOTAL MASS	7.918 t/d
TOTAL VOLUME	6.646 m3/d
DENSITY	1.191 t/m3

STREAM 220 Water Feed to HLW Wash 1

MASS:	t/d
Al	0
Ba	0
Ca	0
Cd	0
Cl	0
Cr	0
F	0
Fe	0
Hg	0
K	0
La	0
Ni	0
NO2	11.770E-3
NO3	0
OH	3.954E-3
Pb	0
PO4	0
SO4	0
TIC	0
TOC	0
U	0
Na	11.235E-3
H2O	23.188
Cs	0
Sr	0
Tc	0
NH3	0
TRU	0
Am	0
Pu	0
NO	0
Si	0
B	0
SrCO3	0
MnO4-	0
Am(OH)3	0
O	0
O2	0
Mn	0
Pu(OH)4	0
P2O5	0
SO2	0
CO2	0
I2	0
N2	0
Co	0
Eu	0
Zn	0
Mg	0
Zr	0
Li	0
NO2(g)	0
CsIX	0
TcIX	0
Sugar	0
Co(OH)3	0
SO4IX	0
H+	0
(TcO4)-	0
B2O3 (s)	0
MnO2 (s)	0
H2O (s)	0
ZnO (s)	0
Li2O (s)	0
TOC (s)	0
Na2O (s)	0
K2O (s)	0
Al2O3(s)	0
CaO (s)	0
Cr2O3(s)	0
Fe2O3(s)	0
NiO (s)	0
MgO (s)	0
SiO2 (s)	0
ZrO2 (s)	0
BaO (s)	0
Anion(s)	0
La2O3(s)	0
PbO2 (s)	0
UO3 (s)	0

ACTIVITY:	TBq/d
Cs137	0
Sr90	0
Tc99	0
Am241	0
Co60	0
Eu154	0
Eu155	0
Pu238	0
Pu239	0
Pu240	0
Pu241	0
H3	0
C14	0
I129	0
OFP	0
U233	0
U235	0
Cm243+4	0
Np237	0
Sb125	0
Cs137 (s)	0
Sr90 (s)	0
Tc99 (s)	0
Am241 (s)	0
Co60 (s)	0
Eu154 (s)	0
Eu155 (s)	0
Pu238 (s)	0
Pu239 (s)	0
Pu240 (s)	0
Pu241 (s)	0
H3 (s)	0
C14 (s)	0
I129 (s)	0
OFP (s)	0
U233 (s)	0
U235 (s)	0
Cm243+4(s)	0
Np237 (s)	0
Sb125 (s)	0
==========	
TOTAL	0
TOTAL TRU	0
TOTAL Eu	0
TOTAL SOLIDS	0

TOTAL PRECIPITATE	0	t/d
TOTAL SOLIDS	0	t/d
TOTAL MASS	23.215	t/d
TOTAL VOLUME	23.261	m3/d
DENSITY	0.998	t/m3

STREAM 210 Water Wash 1 Permeate to LAW Pretreatment

	MASS: t/d
Al	46.366E-3
Ba	6.188E-9
Ca	29.077E-6
Cd	8.652E-9
Cl	8.128E-3
Cr	329.417E-6
F	1.627E-3
Fe	162.762E-6
Hg	0.0
K	53.804E-3
La	6.718E-6
Ni	35.559E-6
NO2	0.164
NO3	0.267
OH	0.108
Pb	160.833E-6
PO4	2.911E-3
SO4	2.503E-3
TIC	28.263E-3
TOC	15.389E-3
U	12.743E-6
Na	0.385
H2O	22.106
Cs	95.016E-6
Sr	12.756E-6
Tc	9.108E-6
NH3	21.364E-3
TRU	10.412E-6
Am	22.194E-9
Pu	1.560E-6
NO	0.0
Si	718.436E-6
B	285.392E-6
SrCO3	0
MnO4-	0.0
Am(OH)3	0
O	1.307E-3
O2	0.0
Mn	198.113E-6
Pu(OH)4	0
P2O5	0.0
SO2	231.336E-12
CO2	0.0
I2	86.513E-6
N2	0.0
Co	0.0
Eu	1.573E-9
Zn	387.593E-6
Mg	57.040E-6
Zr	97.529E-6
Li	76.803E-6
NO2(g)	271.631E-9
CsIX	0.0
TcIX	0.0
Sugar	0.0
Co(OH)3	0
SO4IX	0.0
H+	4.611E-9
(TcO4)-	627.391E-6
B2O3 (s)	0
MnO2 (s)	0
H2O (s)	0
ZnO (s)	0
Li2O (s)	0
TOC (s)	0
Na2O (s)	0
K2O (s)	0
Al2O3(s)	0.0
CaO (s)	0
Cr2O3(s)	0
Fe2O3(s)	0
NiO (s)	0
MgO (s)	0
SiO2 (s)	0
ZrO2 (s)	0
BaO (s)	0
Anion(s)	0
La2O3(s)	0
PbO2 (s)	0
UO3 (s)	0

	ACTIVITY: TBq/d
Cs137	76.021
Sr90	0.717
Tc99	0.247
Am241	2.885E-3
Co60	994.464E-6
Eu154	9.780E-3
Eu155	9.780E-3
Pu238	467.820E-6
Pu239	3.309E-3
Pu240	925.865E-6
Pu241	37.328E-3
H3	0
C14	0
I129	112.467E-6
OFP	537.913E-6
U233	29.178E-6
U235	634.085E-9
Cm243+4	0
Np237	229.836E-6
Sb125	15.306E-3
Cs137 (s)	0.0
Sr90 (s)	0
Tc99 (s)	0
Am241 (s)	0
Co60 (s)	0
Eu154 (s)	0
Eu155 (s)	0
Pu238 (s)	0
Pu239 (s)	0
Pu240 (s)	0
Pu241 (s)	0
H3 (s)	0
C14 (s)	0
I129 (s)	0
OFP (s)	0
U233 (s)	0
U235 (s)	0
Cm243+4(s)	0
Np237 (s)	0
Sb125 (s)	0
TOTAL	77.067
TOTAL TRU	7.818E-3
TOTAL Eu	19.561E-3
TOTAL SOLIDS	0.0

TOTAL PRECIPITATE	0 t/d
TOTAL SOLIDS	0.0 t/d
TOTAL MASS	23.215 t/d
TOTAL VOLUME	22.375 m3/d
DENSITY	1.038 t/m3

STREAM 202 Water Wash 1 Solids to Caustic Wash

	MASS: t/d
Al	4.539E-3
Ba	605.766E-12
Ca	2.846E-6
Cd	846.885E-12
Cl	795.680E-6
Cr	32.246E-6
F	159.272E-6
Fe	15.933E-6
Hg	0.0
K	5.267E-3
La	657.661E-9
Ni	3.481E-6
NO2	16.022E-3
NO3	26.110E-3
OH	10.583E-3
Pb	15.744E-6
PO4	284.979E-6
SO4	245.029E-6
TIC	2.767E-3
TOC	1.506E-3
U	1.247E-6
Na	37.724E-3
H2O	6.226
Cs	9.301E-6
Sr	1.249E-6
Tc	891.553E-9
NH3	2.091E-3
TRU	1.019E-6
Am	2.173E-9
Pu	152.702E-9
NO	0.0
Si	70.327E-6
B	27.937E-6
SrCO3	0.0
MnO4-	0.0
Am(OH)3	0.0
O	127.939E-6
O2	0.0
Mn	19.393E-6
Pu(OH)4	0
P2O5	0.0
SO2	0.0
CO2	0.0
I2	8.469E-6
N2	0.0
Co	0.0
Eu	154.004E-12
Zn	37.941E-6
Mg	5.584E-6
Zr	9.547E-6
Li	7.518E-6
NO2(g)	26.590E-9
CsIX	0.0
TcIX	0.0
Sugar	0.0
Co(OH)3	0.0
SO4IX	0.0
H+	451.358E-12
(TcO4)-	61.415E-6
B2O3 (s)	0
MnO2 (s)	83.878E-3
H2O (s)	0.519
ZnO (s)	0
Li2O (s)	0
TOC (s)	37.850E-3
Na2O (s)	60.943E-3
K2O (s)	10.619E-3
Al2O3(s)	0.278
CaO (s)	8.083E-3
Cr2O3(s)	3.011E-3
Fe2O3(s)	0.340
NiO (s)	17.578E-3
MgO (s)	0
SiO2 (s)	4.676E-3
ZrO2 (s)	0.113
BaO (s)	0
Anion(s)	61.070E-3
La2O3(s)	10.604E-3
PbO2 (s)	4.977E-3
UO3 (s)	29.782E-3

	ACTIVITY: TBq/d
Cs137	7.442
Sr90	70.212E-3
Tc99	24.134E-3
Am241	282.435E-6
Co60	97.136E-6
Eu154	957.364E-6
Eu155	957.364E-6
Pu238	45.795E-6
Pu239	323.915E-6
Pu240	90.632E-6
Pu241	3.654E-3
H3	0
C14	0
I129	11.009E-6
OFP	52.654E-6
U233	2.856E-6
U235	62.068E-9
Cm243+4	0
Np237	22.498E-6
Sb125	1.498E-3
Cs137 (s)	535.868
Sr90 (s)	3.572E3
Tc99 (s)	5.359
Am241 (s)	32.152
Co60 (s)	3.572
Eu154 (s)	18.577
Eu155 (s)	10.360
Pu238 (s)	0.125
Pu239 (s)	1.107
Pu240 (s)	0.318
Pu241 (s)	7.859
H3 (s)	23.221E-3
C14 (s)	2.322E-3
I129 (s)	103.601E-6
OFP (s)	0.225
U233 (s)	321.521E-6
U235 (s)	89.311E-6
Cm243+4(s)	1.072
Np237 (s)	26.436E-3
Sb125 (s)	11.432
==========	
TOTAL	4.208E3
TOTAL TRU	33.730
TOTAL Eu	28.939
TOTAL SOLIDS	4.201E3

TOTAL PRECIPITATE	0.0 t/d
TOTAL SOLIDS	1.584 t/d
TOTAL MASS	7.918 t/d
TOTAL VOLUME	7.228 m3/d
DENSITY	1.096 t/m3

STREAM 207 HLW Feed Concentrate from Dewatering

	MASS: t/d
Al	4.539E-3
Ba	605.766E-12
Ca	2.846E-6
Cd	846.885E-12
Cl	795.680E-6
Cr	32.246E-6
F	159.272E-6
Fe	15.933E-6
Hg	0.0
K	5.267E-3
La	657.661E-9
Ni	3.481E-6
NO2	16.022E-3
NO3	26.110E-3
OH	10.583E-3
Pb	15.744E-6
PO4	284.979E-6
SO4	245.029E-6
TIC	2.767E-3
TOC	1.506E-3
U	1.247E-6
Na	37.724E-3
H2O	6.226
Cs	9.301E-6
Sr	1.249E-6
Tc	891.553E-9
NH3	2.091E-3
TRU	1.019E-6
Am	2.173E-9
Pu	152.702E-9
NO	0.0
Si	70.327E-6
B	27.937E-6
SrCO3	0.0
MnO4-	0.0
Am(OH)3	0.0
O	127.939E-6
O2	0.0
Mn	19.393E-6
Pu(OH)4	0
P2O5	0.0
SO2	0.0
CO2	0.0
I2	8.469E-6
N2	0.0
Co	0.0
Eu	154.004E-12
Zn	37.941E-6
Mg	5.584E-6
Zr	9.547E-6
Li	7.518E-6
NO2(g)	26.590E-9
CsIX	0.0
TcIX	0.0
Sugar	0.0
Co(OH)3	0.0
SO4IX	0.0
H+	451.358E-12
(TcO4)-	61.415E-6
B2O3 (s)	0
MnO2 (s)	83.878E-3
H2O (s)	0.519
ZnO (s)	0
Li2O (s)	0
TOC (s)	37.850E-3
Na2O (s)	60.943E-3
K2O (s)	10.619E-3
Al2O3(s)	0.278
CaO (s)	8.083E-3
Cr2O3(s)	3.011E-3
Fe2O3(s)	0.340
NiO (s)	17.578E-3
MgO (s)	0
SiO2 (s)	4.676E-3
ZrO2 (s)	0.113
BaO (s)	0
Anion(s)	61.070E-3
La2O3(s)	10.604E-3
PbO2 (s)	4.977E-3
UO3 (s)	29.782E-3

	ACTIVITY: TBq/d
Cs137	7.442
Sr90	70.212E-3
Tc99	24.134E-3
Am241	282.435E-6
Co60	97.136E-6
Eu154	957.364E-6
Eu155	957.364E-6
Pu238	45.795E-6
Pu239	323.915E-6
Pu240	90.632E-6
Pu241	3.654E-3
H3	0
C14	0
I129	11.009E-6
OFP	52.654E-6
U233	2.856E-6
U235	62.068E-9
Cm243+4	0
Np237	22.498E-6
Sb125	1.498E-3
Cs137 (s)	535.868
Sr90 (s)	3.572E3
Tc99 (s)	5.359
Am241 (s)	32.152
Co60 (s)	3.572
Eu154 (s)	18.577
Eu155 (s)	10.360
Pu238 (s)	0.125
Pu239 (s)	1.107
Pu240 (s)	0.318
Pu241 (s)	7.859
H3 (s)	23.221E-3
C14 (s)	2.322E-3
I129 (s)	103.601E-6
OFP (s)	0.225
U233 (s)	321.521E-6
U235 (s)	89.311E-6
Cm243+4(s)	1.072
Np237 (s)	26.436E-3
Sb125 (s)	11.432
TOTAL	4.208E3
TOTAL TRU	33.730
TOTAL Eu	28.939
TOTAL SOLIDS	4.201E3

TOTAL PRECIPITATE	0.0 t/d
TOTAL SOLIDS	1.584 t/d
TOTAL MASS	7.918 t/d
TOTAL VOLUME	7.228 m3/d
DENSITY	1.096 t/m3

STREAM 20 Permeate from HLW Feed Ultrafiltration to LAW Treatment

MASS:	t/d
Al	0.446
Ba	59.576E-9
Ca	279.932E-6
Cd	83.290E-9
Cl	78.254E-3
Cr	3.171E-3
F	15.664E-3
Fe	1.567E-3
Hg	0.0
K	0.518
La	64.680E-6
Ni	342.336E-6
NO2	1.483
NO3	2.568
OH	1.010
Pb	1.548E-3
PO4	28.027E-3
SO4	24.098E-3
TIC	0.272
TOC	0.148
U	122.677E-6
Na	3.622
H2O	71.239
Cs	914.746E-6
Sr	122.806E-6
Tc	87.683E-6
NH3	0.206
TRU	100.235E-6
Am	213.668E-9
Pu	15.018E-6
NO	0.0
Si	6.917E-3
B	2.748E-3
SrCO3	0.0
MnO4-	0.0
Am(OH)3	0.0
O	12.583E-3
O2	0.0
Mn	1.907E-3
Pu(OH)4	0.0
P2O5	548.340E-12
SO2	2.227E-9
CO2	0.0
I2	832.880E-6
N2	0.0
Co	227.951E-12
Eu	15.146E-9
Zn	3.731E-3
Mg	549.140E-6
Zr	938.930E-6
Li	739.398E-6
NO2(g)	2.615E-6
CsIX	0.0
TcIX	0.0
Sugar	0.0
Co(OH)3	0.0
SO4IX	0.0
H+	44.391E-9
(TcO4)-	6.040E-3
B2O3 (s)	0.0
MnO2 (s)	8.388E-6
H2O (s)	51.923E-6
ZnO (s)	0.0
Li2O (s)	0.0
TOC (s)	3.785E-6
Na2O (s)	6.094E-6
K2O (s)	1.062E-6
Al2O3(s)	27.844E-6
CaO (s)	888.345E-9
Cr2O3(s)	301.148E-9
Fe2O3(s)	33.987E-6
NiO (s)	1.758E-6
MgO (s)	0.0
SiO2 (s)	467.572E-9
ZrO2 (s)	11.307E-6
BaO (s)	0.0
Anion(s)	6.107E-6
La2O3(s)	1.060E-6
PbO2 (s)	497.687E-9
UO3 (s)	2.978E-6

ACTIVITY:	TBq/d
Cs137	731.875
Sr90	6.905
Tc99	2.373
Am241	27.777E-3
Co60	9.572E-3
Eu154	94.158E-3
Eu155	94.158E-3
Pu238	4.504E-3
Pu239	31.856E-3
Pu240	8.914E-3
Pu241	0.359
H3	0
C14	0
I129	1.083E-3
OFP	5.179E-3
U233	280.900E-6
U235	6.104E-6
Cm243+4	0
Np237	2.213E-3
Sb125	0.147
Cs137 (s)	53.567E-3
Sr90 (s)	0.357
Tc99 (s)	535.674E-6
Am241 (s)	3.214E-3
Co60 (s)	357.116E-6
Eu154 (s)	1.857E-3
Eu155 (s)	1.036E-3
Pu238 (s)	12.499E-6
Pu239 (s)	110.706E-6
Pu240 (s)	31.783E-6
Pu241 (s)	785.655E-6
H3 (s)	2.321E-6
C14 (s)	232.125E-9
I129 (s)	10.356E-9
OFP (s)	22.498E-6
U233 (s)	32.140E-9
U235 (s)	8.928E-9
Cm243+4(s)	107.135E-6
Np237 (s)	2.643E-6
Sb125 (s)	1.143E-3
==========	==========
TOTAL	742.360
TOTAL TRU	78.635E-3
TOTAL Eu	0.191
TOTAL SOLIDS	0.420

TOTAL PRECIPITATE	0.0	t/d
TOTAL SOLIDS	158.367E-6	t/d
TOTAL MASS	81.704	t/d
TOTAL VOLUME	74.598	m3/d
DENSITY	1.095	t/m3

STREAM 145 Combined HLW Feed Concentrate & Intermediate LAW Process Products

MASS:	t/d
Al	4.558E-3
Ba	603.027E-12
Ca	12.146E-6
Cd	841.826E-9
Cl	802.356E-6
Cr	34.926E-6
F	166.482E-6
Fe	40.425E-6
Hg	0.0
K	6.312E-3
La	657.658E-9
Ni	10.519E-6
NO2	16.792E-3
NO3	0.173
OH	11.127E-3
Pb	20.770E-6
PO4	302.723E-6
SO4	275.333E-6
TIC	3.967E-3
TOC	1.766E-3
U	1.247E-6
Na	95.014E-3
H2O	7.068
Cs	2.160E-3
Sr	2.432E-6
Tc	1.939E-6
NH3	2.107E-3
TRU	1.019E-6
Am	2.170E-9
Pu	152.699E-9
NO	0.0
Si	72.964E-6
B	28.714E-6
SrCO3	20.145E-3
MnO4-	44.945E-6
Am(OH)3	0.0
O	133.987E-6
O2	0.0
Mn	27.289E-6
Pu(OH)4	1.154E-6
P2O5	0.0
SO2	0.0
CO2	0.0
I2	9.185E-6
N2	0.0
Co	0.0
Eu	151.264E-12
Zn	38.481E-6
Mg	5.584E-6
Zr	10.673E-6
Li	7.518E-6
NO2(g)	26.587E-9
CsIX	0.0
TcIX	0.0
Sugar	0.0
Co(OH)3	0.0
SO4IX	0.0
H+	134.465E-9
(TcO4)-	10.054E-3
B2O3 (s)	0.0
MnO2 (s)	89.203E-3
H2O (s)	0.519
ZnO (s)	10.948E-6
Li2O (s)	0.0
TOC (s)	54.576E-3
Na2O (s)	85.629E-3
K2O (s)	10.726E-3
Al2O3(s)	0.280
CaO (s)	8.153E-3
Cr2O3(s)	3.152E-3
Fe2O3(s)	0.342
NiO (s)	17.625E-3
MgO (s)	6.672E-6
SiO2 (s)	4.774E-3
ZrO2 (s)	0.113
BaO (s)	6.719E-6
Anion(s)	61.342E-3
La2O3(s)	10.621E-3
PbO2 (s)	5.088E-3
UO3 (s)	29.782E-3

ACTIVITY:	TBq/d
Cs137	1.728E3
Sr90	71.156E-3
Tc99	3.817
Am241	315.061E-6
Co60	147.801E-6
Eu154	1.252E-3
Eu155	1.250E-3
Pu238	46.447E-6
Pu239	326.011E-6
Pu240	91.217E-6
Pu241	3.678E-3
H3	0
C14	0
I129	11.941E-6
OFP	52.654E-6
U233	2.856E-6
U235	62.068E-9
Cm243+4	0
Np237	22.498E-6
Sb125	1.553E-3
Cs137 (s)	536.688
Sr90 (s)	3.583E3
Tc99 (s)	5.359
Am241 (s)	32.191
Co60 (s)	3.572
Eu154 (s)	18.583
Eu155 (s)	10.364
Pu238 (s)	0.126
Pu239 (s)	1.110
Pu240 (s)	0.319
Pu241 (s)	7.888
H3 (s)	23.221E-3
C14 (s)	2.322E-3
I129 (s)	103.601E-6
OFP (s)	0.225
U233 (s)	321.521E-6
U235 (s)	89.311E-6
Cm243+4(s)	1.072
Np237 (s)	26.881E-3
Sb125 (s)	11.432
TOTAL	5.944E3
TOTAL TRU	33.773
TOTAL Eu	28.950
TOTAL SOLIDS	4.212E3

TOTAL PRECIPITATE	20.146E-3	t/d
TOTAL SOLIDS	1.635	t/d
TOTAL MASS	9.052	t/d
TOTAL VOLUME	8.239	m3/d
DENSITY	1.099	t/m3

STREAM 116 HLW Glass Formers Feed

MASS:	t/d	ACTIVITY:	TBq/d
Al	0	Cs137	0
Ba	0	Sr90	0
Ca	0	Tc99	0
Cd	0	Am241	0
Cl	0	Co60	0
Cr	0	Eu154	0
F	0	Eu155	0
Fe	0	Pu238	0
Hg	0	Pu239	0
K	0	Pu240	0
La	0	Pu241	0
Ni	0	H3	0
NO2	0	C14	0
NO3	0	I129	0
OH	0	OFP	0
Pb	0	U233	0
PO4	0	U235	0
SO4	0	Cm243+4	0
TIC	0	Np237	0
TOC	0	Sb125	0
U	0	Cs137 (s)	0
Na	88.624E-3	Sr90 (s)	0
H2O	0.208	Tc99 (s)	0
Cs	0	Am241 (s)	0
Sr	0	Co60 (s)	0
Tc	0	Eu154 (s)	0
NH3	0	Eu155 (s)	0
TRU	0	Pu238 (s)	0
Am	0	Pu239 (s)	0
Pu	0	Pu240 (s)	0
NO	0	Pu241 (s)	0
Si	0.570	H3 (s)	0
B	83.236E-3	C14 (s)	0
SrCO3	0	I129 (s)	0
MnO4-	0	OFP (s)	0
Am(OH)3	0	U233 (s)	0
O	0.962	U235 (s)	0
O2	0	Cm243+4(s)	0
Mn	0	Np237 (s)	0
Pu(OH)4	0	Sb125 (s)	0
P2O5	0	==========	
SO2	0	TOTAL	0
CO2	0.322	TOTAL TRU	0
I2	0	TOTAL Eu	0
N2	0	TOTAL SOLIDS	0
Co	0		
Eu	0		
Zn	43.079E-3		
Mg	0		
Zr	0		
Li	74.684E-3		
NO2(g)	0		
CsIX	0		
TcIX	0		
Sugar	0		
Co(OH)3	0		
SO4IX	0		
H+	0		
(TcO4)-	0		
B2O3 (s)	0		
MnO2 (s)	0		
H2O (s)	0		
ZnO (s)	0		
Li2O (s)	0		
TOC (s)	0		
Na2O (s)	0		
K2O (s)	0		
Al2O3(s)	0		
CaO (s)	0		
Cr2O3(s)	0		
Fe2O3(s)	0		
NiO (s)	0		
MgO (s)	0		
SiO2 (s)	0		
ZrO2 (s)	0		
BaO (s)	0	TOTAL PRECIPITATE	0 t/d
Anion(s)	0	TOTAL SOLIDS	0 t/d
La2O3(s)	0	TOTAL MASS	2.352 t/d
PbO2 (s)	0	TOTAL VOLUME	2.352 m3/d
UO3 (s)	0	DENSITY	1.000 t/m3

STREAM 117 Blended HLW Melter Feed

	MASS: t/d
Al	4.558E-3
Ba	603.027E-12
Ca	12.146E-6
Cd	841.826E-9
Cl	802.356E-6
Cr	34.926E-6
F	166.482E-6
Fe	40.425E-6
Hg	0.0
K	6.312E-3
La	657.658E-9
Ni	10.519E-6
NO2	16.792E-3
NO3	0.173
OH	11.127E-3
Pb	20.770E-6
PO4	302.723E-6
SO4	275.333E-6
TIC	3.967E-3
TOC	1.766E-3
U	1.247E-6
Na	0.184
H2O	7.276
Cs	2.160E-3
Sr	2.432E-6
Tc	1.939E-6
NH3	2.107E-3
TRU	1.019E-6
Am	2.170E-9
Pu	152.699E-9
NO	0.0
Si	0.570
B	83.265E-3
SrCO3	20.145E-3
MnO4-	44.945E-6
Am(OH)3	0.0
O	0.962
O2	0.0
Mn	27.289E-6
Pu(OH)4	1.154E-6
P2O5	0.0
SO2	0.0
CO2	0.322
I2	9.185E-6
N2	0.0
Co	0.0
Eu	151.264E-12
Zn	43.117E-3
Mg	5.584E-6
Zr	10.673E-6
Li	74.692E-3
NO2(g)	26.587E-9
CsIX	0.0
TcIX	0.0
Sugar	0.0
Co(OH)3	0.0
SO4IX	0.0
H+	134.465E-9
(TcO4)-	10.054E-3
B2O3 (s)	0.0
MnO2 (s)	89.203E-3
H2O (s)	0.519
ZnO (s)	10.948E-6
Li2O (s)	0.0
TOC (s)	54.576E-3
Na2O (s)	85.629E-3
K2O (s)	10.726E-3
Al2O3(s)	0.280
CaO (s)	8.153E-3
Cr2O3(s)	3.152E-3
Fe2O3(s)	0.342
NiO (s)	17.625E-3
MgO (s)	6.672E-6
SiO2 (s)	4.774E-3
ZrO2 (s)	0.113
BaO (s)	6.719E-6
Anion(s)	61.342E-3
La2O3(s)	10.621E-3
PbO2 (s)	5.088E-3
UO3 (s)	29.782E-3

	ACTIVITY: TBq/d
Cs137	1.728E3
Sr90	71.156E-3
Tc99	3.817
Am241	315.061E-6
Co60	147.801E-6
Eu154	1.252E-3
Eu155	1.250E-3
Pu238	46.447E-6
Pu239	326.011E-6
Pu240	91.217E-6
Pu241	3.678E-3
H3	0
C14	0
I129	11.941E-6
OFP	52.654E-6
U233	2.856E-6
U235	62.068E-9
Cm243+4	0
Np237	22.498E-6
Sb125	1.553E-3
Cs137 (s)	536.688
Sr90 (s)	3.583E3
Tc99 (s)	5.359
Am241 (s)	32.191
Co60 (s)	3.572
Eu154 (s)	18.583
Eu155 (s)	10.364
Pu238 (s)	0.126
Pu239 (s)	1.110
Pu240 (s)	0.319
Pu241 (s)	7.888
H3 (s)	23.221E-3
C14 (s)	2.322E-3
I129 (s)	103.601E-6
OFP (s)	0.225
U233 (s)	321.521E-6
U235 (s)	89.311E-6
Cm243+4(s)	1.072
Np237 (s)	26.881E-3
Sb125 (s)	11.432
	==========
TOTAL	5.944E3
TOTAL TRU	33.773
TOTAL Eu	28.950
TOTAL SOLIDS	4.212E3

TOTAL PRECIPITATE	20.146E-3 t/d
TOTAL SOLIDS	1.635 t/d
TOTAL MASS	11.403 t/d
TOTAL VOLUME	10.668 m3/d
DENSITY	1.069 t/m3

STREAM 130 HLW Melter Sugar Addition

MASS:	t/d
Al	0
Ba	0
Ca	0
Cd	0
Cl	0
Cr	0
F	0
Fe	0
Hg	0
K	0
La	0
Ni	0
NO2	0
NO3	0
OH	0
Pb	0
PO4	0
SO4	0
TIC	0
TOC	0
U	0
Na	0
H2O	0
Cs	0
Sr	0
Tc	0
NH3	0
TRU	0
Am	0
Pu	0
NO	0
Si	0
B	0
SrCO3	0
MnO4-	0
Am(OH)3	0
O	0
O2	0
Mn	0
Pu(OH)4	0
P2O5	0
SO2	0
CO2	0
I2	0
N2	0
Co	0
Eu	0
Zn	0
Mg	0
Zr	0
Li	0
NO2(g)	0
CsIX	0
TcIX	0
Sugar	0.108
Co(OH)3	0
SO4IX	0
H+	0
(TcO4)-	0
B2O3 (s)	0
MnO2 (s)	0
H2O (s)	0
ZnO (s)	0
Li2O (s)	0
TOC (s)	0
Na2O (s)	0
K2O (s)	0
Al2O3(s)	0
CaO (s)	0
Cr2O3(s)	0
Fe2O3(s)	0
NiO (s)	0
MgO (s)	0
SiO2 (s)	0
ZrO2 (s)	0
BaO (s)	0
Anion(s)	0
La2O3(s)	0
PbO2 (s)	0
UO3 (s)	0

ACTIVITY:	TBq/d
Cs137	0
Sr90	0
Tc99	0
Am241	0
Co60	0
Eu154	0
Eu155	0
Pu238	0
Pu239	0
Pu240	0
Pu241	0
H3	0
C14	0
I129	0
OFP	0
U233	0
U235	0
Cm243+4	0
Np237	0
Sb125	0
Cs137 (s)	0
Sr90 (s)	0
Tc99 (s)	0
Am241 (s)	0
Co60 (s)	0
Eu154 (s)	0
Eu155 (s)	0
Pu238 (s)	0
Pu239 (s)	0
Pu240 (s)	0
Pu241 (s)	0
H3 (s)	0
C14 (s)	0
I129 (s)	0
OFP (s)	0
U233 (s)	0
U235 (s)	0
Cm243+4(s)	0
Np237 (s)	0
Sb125 (s)	0
==========	
TOTAL	0
TOTAL TRU	0
TOTAL Eu	0
TOTAL SOLIDS	0

TOTAL PRECIPITATE	0 t/d
TOTAL SOLIDS	0 t/d
TOTAL MASS	0.108 t/d
TOTAL VOLUME	68.417E-3 m3/d
DENSITY	1.581 t/m3

STREAM 118 Blended HLW Melter Feed with Sugar

MASS:	t/d
Al	4.558E-3
Ba	603.027E-12
Ca	12.146E-6
Cd	841.826E-9
Cl	802.356E-6
Cr	34.926E-6
F	166.482E-6
Fe	40.425E-6
Hg	0.0
K	6.312E-3
La	657.658E-9
Ni	10.519E-6
NO2	16.792E-3
NO3	0.173
OH	11.127E-3
Pb	20.770E-6
PO4	302.723E-6
SO4	275.333E-6
TIC	3.967E-3
TOC	1.766E-3
U	1.247E-6
Na	0.184
H2O	7.276
Cs	2.160E-3
Sr	2.432E-6
Tc	1.939E-6
NH3	2.107E-3
TRU	1.019E-6
Am	2.170E-9
Pu	152.699E-9
NO	0.0
Si	0.570
B	83.265E-3
SrCO3	20.145E-3
MnO4-	44.945E-6
Am(OH)3	0.0
O	0.962
O2	0.0
Mn	27.289E-6
Pu(OH)4	1.154E-6
P2O5	0.0
SO2	0.0
CO2	0.322
I2	9.185E-6
N2	0.0
Co	0.0
Eu	151.264E-12
Zn	43.117E-3
Mg	5.584E-6
Zr	10.673E-6
Li	74.692E-3
NO2(g)	26.587E-9
CsIX	0.0
TcIX	0.0
Sugar	0.108
Co(OH)3	0.0
SO4IX	0.0
H+	134.465E-9
(TcO4)-	10.054E-3
B2O3 (s)	0.0
MnO2 (s)	89.203E-3
H2O (s)	0.519
ZnO (s)	10.948E-6
Li2O (s)	0.0
TOC (s)	54.576E-3
Na2O (s)	85.629E-3
K2O (s)	10.726E-3
Al2O3(s)	0.280
CaO (s)	8.153E-3
Cr2O3(s)	3.152E-3
Fe2O3(s)	0.342
NiO (s)	17.625E-3
MgO (s)	6.672E-6
SiO2 (s)	4.774E-3
ZrO2 (s)	0.113
BaO (s)	6.719E-6
Anion(s)	61.342E-3
La2O3(s)	10.621E-3
PbO2 (s)	5.088E-3
UO3 (s)	29.782E-3

ACTIVITY:	TBq/d
Cs137	1.728E3
Sr90	71.156E-3
Tc99	3.817
Am241	315.061E-6
Co60	147.801E-6
Eu154	1.252E-3
Eu155	1.250E-3
Pu238	46.447E-6
Pu239	326.011E-6
Pu240	91.217E-6
Pu241	3.678E-3
H3	0
C14	0
I129	11.941E-6
OFP	52.654E-6
U233	2.856E-6
U235	62.068E-9
Cm243+4	0
Np237	22.498E-6
Sb125	1.553E-3
Cs137 (s)	536.688
Sr90 (s)	3.583E3
Tc99 (s)	5.359
Am241 (s)	32.191
Co60 (s)	3.572
Eu154 (s)	18.583
Eu155 (s)	10.364
Pu238 (s)	0.126
Pu239 (s)	1.110
Pu240 (s)	0.319
Pu241 (s)	7.888
H3 (s)	23.221E-3
C14 (s)	2.322E-3
I129 (s)	103.601E-6
OFP (s)	0.225
U233 (s)	321.521E-6
U235 (s)	89.311E-6
Cm243+4(s)	1.072
Np237 (s)	26.881E-3
Sb125 (s)	11.432
TOTAL	5.944E3
TOTAL TRU	33.773
TOTAL Eu	28.950
TOTAL SOLIDS	4.212E3

TOTAL PRECIPITATE	20.146E-3 t/d
TOTAL SOLIDS	1.635 t/d
TOTAL MASS	11.512 t/d
TOTAL VOLUME	10.723 m3/d
DENSITY	1.074 t/m3

STREAM 119 Sparge and Film Cooler Air Feed to HLW Melter

MASS:	t/d
Al	0
Ba	0
Ca	0
Cd	0
Cl	0
Cr	0
F	0
Fe	0
Hg	0
K	0
La	0
Ni	0
NO2	0
NO3	0
OH	0
Pb	0
PO4	0
SO4	0
TIC	0
TOC	0
U	0
Na	0
H2O	0.516
Cs	0
Sr	0
Tc	0
NH3	0
TRU	0
Am	0
Pu	0
NO	0
Si	0
B	0
SrCO3	0
MnO4-	0
Am(OH)3	0
O	0
O2	11.368
Mn	0
Pu(OH)4	0
P2O5	0
SO2	0
CO2	25.590E-3
I2	0
N2	39.787
Co	0
Eu	0
Zn	0
Mg	0
Zr	0
Li	0
NO2(g)	0
CsIX	0
TcIX	0
Sugar	0
Co(OH)3	0
SO4IX	0
H+	0
(TcO4)-	0
B2O3 (s)	0
MnO2 (s)	0
H2O (s)	0
ZnO (s)	0
Li2O (s)	0
TOC (s)	0
Na2O (s)	0
K2O (s)	0
Al2O3(s)	0
CaO (s)	0
Cr2O3(s)	0
Fe2O3(s)	0
NiO (s)	0
MgO (s)	0
SiO2 (s)	0
ZrO2 (s)	0
BaO (s)	0
Anion(s)	0
La2O3(s)	0
PbO2 (s)	0
UO3 (s)	0

ACTIVITY:	TBq/d
Cs137	0
Sr90	0
Tc99	0
Am241	0
Co60	0
Eu154	0
Eu155	0
Pu238	0
Pu239	0
Pu240	0
Pu241	0
H3	0
C14	0
I129	0
OFP	0
U233	0
U235	0
Cm243+4	0
Np237	0
Sb125	0
Cs137 (s)	0
Sr90 (s)	0
Tc99 (s)	0
Am241 (s)	0
Co60 (s)	0
Eu154 (s)	0
Eu155 (s)	0
Pu238 (s)	0
Pu239 (s)	0
Pu240 (s)	0
Pu241 (s)	0
H3 (s)	0
C14 (s)	0
I129 (s)	0
OFP (s)	0
U233 (s)	0
U235 (s)	0
Cm243+4(s)	0
Np237 (s)	0
Sb125 (s)	0
TOTAL	0
TOTAL TRU	0
TOTAL Eu	0
TOTAL SOLIDS	0

TOTAL PRECIPITATE	0	t/d
TOTAL SOLIDS	0	t/d
TOTAL MASS	51.696	t/d
TOTAL VOLUME	43.939E3	m3/d
DENSITY	1.177E-3	t/m3

STREAM 143 HLW Glass Product

MASS:	t/d
Al	0.151
Ba	5.958E-6
Ca	5.781E-3
Cd	757.643E-9
Cl	534.904E-6
Cr	2.170E-3
F	124.861E-6
Fe	0.238
Hg	0.0
K	14.455E-3
La	13.002E-3
Ni	13.814E-3
NO2	0.0
NO3	3.130E-9
OH	0.0
Pb	4.720E-3
PO4	285.154E-12
SO4	230.917E-12
TIC	0.0
TOC	0.0
U	24.661E-3
Na	0.245
H2O	8.407E-6
Cs	2.088E-3
Sr	11.839E-3
Tc	1.293E-6
NH3	2.097E-9
TRU	1.014E-6
Am	2.157E-9
Pu	1.047E-6
NO	22.881E-9
Si	0.571
B	80.489E-3
SrCO3	0.0
MnO4-	44.945E-6
Am(OH)3	0.0
O	1.359
O2	11.215E-6
Mn	56.101E-3
Pu(OH)4	0.0
P2O5	0.0
SO2	0.0
CO2	607.907E-9
I2	0.0
N2	39.809E-6
Co	0.0
Eu	150.458E-12
Zn	42.695E-3
Mg	9.559E-6
Zr	83.462E-3
Li	73.945E-3
NO2(g)	52.823E-9
CsIX	0.0
TcIX	0.0
Sugar	0.0
Co(OH)3	0.0
SO4IX	0.0
H+	0.0
(TcO4)-	6.703E-3
B2O3 (s)	0
MnO2 (s)	0
H2O (s)	0.0
ZnO (s)	0.0
Li2O (s)	0
TOC (s)	0.0
Na2O (s)	0
K2O (s)	0.0
Al2O3(s)	0.0
CaO (s)	0
Cr2O3(s)	0.0
Fe2O3(s)	0
NiO (s)	0.0
MgO (s)	0
SiO2 (s)	0
ZrO2 (s)	0.0
BaO (s)	0
Anion(s)	0.0
La2O3(s)	0.0
PbO2 (s)	0.0
UO3 (s)	0

ACTIVITY:	TBq/d
Cs137	1.671E3
Sr90	70.445E-3
Tc99	2.545
Am241	313.486E-6
Co60	147.801E-6
Eu154	1.245E-3
Eu155	1.244E-3
Pu238	46.214E-6
Pu239	324.381E-6
Pu240	90.761E-6
Pu241	3.659E-3
H3	0
C14	0
I129	0.0
OFP	52.391E-6
U233	2.842E-6
U235	61.758E-9
Cm243+4	0
Np237	22.385E-6
Sb125	1.546E-3
Cs137 (s)	536.688
Sr90 (s)	3.583E3
Tc99 (s)	5.359
Am241 (s)	32.191
Co60 (s)	3.572
Eu154 (s)	18.583
Eu155 (s)	10.364
Pu238 (s)	0.126
Pu239 (s)	1.110
Pu240 (s)	0.319
Pu241 (s)	7.888
H3 (s)	23.221E-3
C14 (s)	2.322E-3
I129 (s)	103.601E-6
OFP (s)	0.225
U233 (s)	321.521E-6
U235 (s)	89.311E-6
Cm243+4(s)	1.072
Np237 (s)	26.881E-3
Sb125 (s)	11.432
TOTAL	5.885E3
TOTAL TRU	33.773
TOTAL Eu	28.950
TOTAL SOLIDS	4.212E3

TOTAL PRECIPITATE	0.0 t/d
TOTAL SOLIDS	0.0 t/d
TOTAL MASS	3.000 t/d
TOTAL VOLUME	1.154 m3/d
DENSITY	2.600 t/m3

STREAM 120 HLW Melter Offgas to HLW Melter Offgas SBS

	MASS: t/d
Al	1.530E-3
Ba	60.182E-9
Ca	58.395E-6
Cd	84.184E-9
Cl	267.452E-6
Cr	21.915E-6
F	41.620E-6
Fe	1.194E-3
Hg	0.0
K	760.796E-6
La	65.337E-6
Ni	46.201E-6
NO2	0.0
NO3	3.140E-3
OH	0.0
Pb	23.721E-6
PO4	295.154E-6
SO4	240.916E-6
TIC	0.0
TOC	0.0
U	123.924E-6
Na	2.472E-3
H2O	8.407
Cs	72.006E-6
Sr	119.583E-6
Tc	646.472E-9
NH3	2.107E-3
TRU	5.096E-9
Am	0.0
Pu	5.259E-9
NO	22.891E-3
Si	1.909E-3
B	2.775E-3
SrCO3	0.0
MnO4-	0.0
Am(OH)3	0.0
O	13.725E-3
O2	11.215
Mn	281.912E-6
Pu(OH)4	0
P2O5	5.652E-6
SO2	22.956E-6
CO2	0.608
I2	9.185E-6
N2	39.809
Co	0.0
Eu	0.0
Zn	431.262E-6
Mg	48.034E-9
Zr	279.139E-6
Li	746.919E-6
NO2(g)	52.833E-3
CsIX	0.0
TcIX	0.0
Sugar	0.0
Co(OH)3	0.0
SO4IX	0.0
H+	134.474E-9
(TcO4)-	3.351E-3
B2O3 (s)	0
MnO2 (s)	0
H2O (s)	0
ZnO (s)	0
Li2O (s)	0
TOC (s)	0
Na2O (s)	0
K2O (s)	0
Al2O3(s)	0
CaO (s)	0
Cr2O3(s)	0
Fe2O3(s)	0
NiO (s)	0
MgO (s)	0
SiO2 (s)	0
ZrO2 (s)	0
BaO (s)	0
Anion(s)	0
La2O3(s)	0
PbO2 (s)	0
UO3 (s)	0.0

	ACTIVITY: TBq/d
Cs137	57.610
Sr90	711.563E-6
Tc99	1.272
Am241	1.575E-6
Co60	0
Eu154	6.258E-6
Eu155	6.249E-6
Pu238	232.234E-9
Pu239	1.630E-6
Pu240	456.085E-9
Pu241	18.388E-6
H3	0.0
C14	0
I129	11.941E-6
OFP	263.271E-9
U233	14.280E-9
U235	310.341E-12
Cm243+4	0
Np237	112.489E-9
Sb125	7.767E-6
Cs137 (s)	0
Sr90 (s)	0.0
Tc99 (s)	0
Am241 (s)	0
Co60 (s)	0
Eu154 (s)	0
Eu155 (s)	0
Pu238 (s)	0
Pu239 (s)	0
Pu240 (s)	0
Pu241 (s)	0
H3 (s)	0
C14 (s)	0
I129 (s)	0
OFP (s)	0
U233 (s)	0
U235 (s)	0
Cm243+4(s)	0
Np237 (s)	0
Sb125 (s)	0
==========	
TOTAL	58.883
TOTAL TRU	4.006E-6
TOTAL Eu	12.507E-6
TOTAL SOLIDS	0.0

TOTAL PRECIPITATE	0.0 t/d
TOTAL SOLIDS	0.0 t/d
TOTAL MASS	60.151 t/d
TOTAL VOLUME	55.742E3 m3/d
DENSITY	1.079E-3 t/m3

STREAM 121 WESP and HEME Condensate to HLW Melter Offgas SBS

MASS:	t/d
Al	50.988E-6
Ba	2.006E-9
Ca	1.946E-6
Cd	28.014E-9
Cl	53.490E-6
Cr	730.486E-9
F	8.324E-6
Fe	39.789E-6
Hg	0
K	152.158E-6
La	2.178E-6
Ni	9.240E-6
NO2	0.0
NO3	0.0
OH	430.697E-6
Pb	4.744E-6
PO4	0.0
SO4	0.0
TIC	0.0
TOC	0.0
U	4.131E-6
Na	494.329E-6
H2O	3.086
Cs	24.025E-6
Sr	3.986E-6
Tc	130.737E-9
NH3	0
TRU	0.0
Am	0.0
Pu	0.0
NO	0
Si	63.633E-6
B	555.086E-6
SrCO3	0.0
MnO4-	0.0
Am(OH)3	0.0
O	254.829E-6
O2	0.0
Mn	9.397E-6
Pu(OH)4	0
P2O5	1.017E-6
SO2	4.132E-6
CO2	0
I2	0
N2	0
Co	0.0
Eu	0.0
Zn	14.375E-6
Mg	1.601E-9
Zr	9.305E-6
Li	149.381E-6
NO2(g)	0.0
CsIX	0.0
TcIX	0.0
Sugar	0.0
Co(OH)3	0.0
SO4IX	0.0
H+	0.0
(TcO4)-	669.817E-6
B2O3 (s)	0
MnO2 (s)	0
H2O (s)	0
ZnO (s)	0
Li2O (s)	0
TOC (s)	0
Na2O (s)	0
K2O (s)	0
Al2O3(s)	0
CaO (s)	0
Cr2O3(s)	0
Fe2O3(s)	0
NiO (s)	0
MgO (s)	0
SiO2 (s)	0
ZrO2 (s)	0
BaO (s)	0
Anion(s)	0
La2O3(s)	0
PbO2 (s)	0
UO3 (s)	0.0

ACTIVITY:	TBq/d
Cs137	19.296
Sr90	122.560E-6
Tc99	0.254
Am241	765.310E-9
Co60	0.0
Eu154	208.598E-9
Eu155	208.304E-9
Pu238	7.741E-9
Pu239	282.035E-9
Pu240	64.604E-9
Pu241	612.912E-9
H3	0.0
C14	0
I129	0
OFP	8.776E-9
U233	476.011E-12
U235	0.0
Cm243+4	0
Np237	3.750E-9
Sb125	258.890E-9
Cs137 (s)	0
Sr90 (s)	0.0
Tc99 (s)	0
Am241 (s)	0
Co60 (s)	0
Eu154 (s)	0
Eu155 (s)	0
Pu238 (s)	0
Pu239 (s)	0
Pu240 (s)	0
Pu241 (s)	0
H3 (s)	0
C14 (s)	0
I129 (s)	0
OFP (s)	0
U233 (s)	0
U235 (s)	0
Cm243+4(s)	0
Np237 (s)	0
Sb125 (s)	0
==========	
TOTAL	19.550
TOTAL TRU	1.123E-6
TOTAL Eu	416.902E-9
TOTAL SOLIDS	0.0

TOTAL PRECIPITATE	0.0 t/d
TOTAL SOLIDS	0.0 t/d
TOTAL MASS	3.089 t/d
TOTAL VOLUME	3.079 m3/d
DENSITY	1.003 t/m3

STREAM 122 HLW Melter Offgas from HLW Melter SBS to HLW WESP

MASS:	t/d
Al	50.988E-6
Ba	2.006E-9
Ca	1.947E-6
Cd	28.061E-9
Cl	53.490E-6
Cr	730.493E-9
F	8.324E-6
Fe	39.790E-6
Hg	0.0
K	152.159E-6
La	2.178E-6
Ni	9.240E-6
NO2	0.0
NO3	0.0
OH	0.0
Pb	4.744E-6
PO4	0.0
SO4	0.0
TIC	0.0
TOC	0.0
U	4.131E-6
Na	494.338E-6
H2O	4.013
Cs	24.002E-6
Sr	3.986E-6
Tc	129.294E-9
NH3	2.107E-3
TRU	0.0
Am	0.0
Pu	0.0
NO	22.891E-3
Si	63.634E-6
B	555.097E-6
SrCO3	0.0
MnO4-	0.0
Am(OH)3	0.0
O	457.514E-6
O2	11.210
Mn	9.397E-6
Pu(OH)4	0
P2O5	1.130E-6
SO2	4.591E-6
CO2	0.608
I2	9.185E-6
N2	39.809
Co	0.0
Eu	0.0
Zn	14.375E-6
Mg	1.601E-9
Zr	9.305E-6
Li	149.384E-6
NO2(g)	26.416E-3
CsIX	0.0
TcIX	0.0
Sugar	0.0
Co(OH)3	0.0
SO4IX	0.0
H+	0.0
(TcO4)-	670.264E-6
B2O3 (s)	0
MnO2 (s)	0
H2O (s)	0
ZnO (s)	0
Li2O (s)	0
TOC (s)	0
Na2O (s)	0
K2O (s)	0
Al2O3(s)	0
CaO (s)	0
Cr2O3(s)	0
Fe2O3(s)	0
NiO (s)	0
MgO (s)	0
SiO2 (s)	0
ZrO2 (s)	0
BaO (s)	0
Anion(s)	0
La2O3(s)	0
PbO2 (s)	0
UO3 (s)	0.0

ACTIVITY:	TBq/d
Cs137	19.203
Sr90	23.719E-6
Tc99	0.254
Am241	52.510E-9
Co60	0.0
Eu154	208.600E-9
Eu155	208.306E-9
Pu238	7.741E-9
Pu239	54.335E-9
Pu240	15.203E-9
Pu241	612.918E-9
H3	0
C14	0
I129	11.941E-6
OFP	8.776E-9
U233	476.016E-12
U235	0.0
Cm243+4	0
Np237	3.750E-9
Sb125	258.893E-9
Cs137 (s)	0
Sr90 (s)	0.0
Tc99 (s)	0
Am241 (s)	0
Co60 (s)	0
Eu154 (s)	0
Eu155 (s)	0
Pu238 (s)	0
Pu239 (s)	0
Pu240 (s)	0
Pu241 (s)	0
H3 (s)	0
C14 (s)	0
I129 (s)	0
OFP (s)	0
U233 (s)	0
U235 (s)	0
Cm243+4(s)	0
Np237 (s)	0
Sb125 (s)	0
==========	
TOTAL	19.458
TOTAL TRU	133.539E-9
TOTAL Eu	416.906E-9
TOTAL SOLIDS	0.0

TOTAL PRECIPITATE	0.0	t/d
TOTAL SOLIDS	0.0	t/d
TOTAL MASS	55.694	t/d
TOTAL VOLUME	49.664E3	m3/d
DENSITY	1.121E-3	t/m3

STREAM 129 5M NaOH Feed to HLW SBS Condensate

MASS:	t/d
Al	0
Ba	0
Ca	0
Cd	0
Cl	0
Cr	0
F	0
Fe	0
Hg	0
K	0
La	0
Ni	0
NO2	0
NO3	0
OH	0.0
Pb	0
PO4	0
SO4	0
TIC	0
TOC	0
U	0
Na	0.0
H2O	0.0
Cs	0
Sr	0
Tc	0
NH3	0
TRU	0
Am	0
Pu	0
NO	0
Si	0
B	0
SrCO3	0
MnO4-	0
Am(OH)3	0
O	0
O2	0
Mn	0
Pu(OH)4	0
P2O5	0
SO2	0
CO2	0
I2	0
N2	0
Co	0
Eu	0
Zn	0
Mg	0
Zr	0
Li	0
NO2(g)	0
CsIX	0
TcIX	0
Sugar	0
Co(OH)3	0
SO4IX	0
H+	0
(TcO4)-	0
B2O3 (s)	0
MnO2 (s)	0
H2O (s)	0
ZnO (s)	0
Li2O (s)	0
TOC (s)	0
Na2O (s)	0
K2O (s)	0
Al2O3(s)	0
CaO (s)	0
Cr2O3(s)	0
Fe2O3(s)	0
NiO (s)	0
MgO (s)	0
SiO2 (s)	0
ZrO2 (s)	0
BaO (s)	0
Anion(s)	0
La2O3(s)	0
PbO2 (s)	0
UO3 (s)	0

ACTIVITY:	TBq/d
Cs137	0
Sr90	0
Tc99	0
Am241	0
Co60	0
Eu154	0
Eu155	0
Pu238	0
Pu239	0
Pu240	0
Pu241	0
H3	0
C14	0
I129	0
OFP	0
U233	0
U235	0
Cm243+4	0
Np237	0
Sb125	0
Cs137 (s)	0
Sr90 (s)	0
Tc99 (s)	0
Am241 (s)	0
Co60 (s)	0
Eu154 (s)	0
Eu155 (s)	0
Pu238 (s)	0
Pu239 (s)	0
Pu240 (s)	0
Pu241 (s)	0
H3 (s)	0
C14 (s)	0
I129 (s)	0
OFP (s)	0
U233 (s)	0
U235 (s)	0
Cm243+4(s)	0
Np237 (s)	0
Sb125 (s)	0
==========	
TOTAL	0
TOTAL TRU	0
TOTAL Eu	0
TOTAL SOLIDS	0

TOTAL PRECIPITATE	0 t/d
TOTAL SOLIDS	0 t/d
TOTAL MASS	0.0 t/d
TOTAL VOLUME	0.0 m3/d
DENSITY	1.186 t/m3

STREAM 123 Liquid Effluent from HLW Melter Offgas SBS

MASS:	t/d
Al	1.530E-3
Ba	60.182E-9
Ca	58.395E-6
Cd	84.137E-9
Cl	267.452E-6
Cr	21.915E-6
F	41.620E-6
Fe	1.194E-3
Hg	0.0
K	760.795E-6
La	65.337E-6
Ni	46.201E-6
NO2	0.0
NO3	38.741E-3
OH	215.625E-9
Pb	23.721E-6
PO4	302.570E-6
SO4	274.641E-6
TIC	0.0
TOC	0.0
U	123.924E-6
Na	2.472E-3
H2O	7.476
Cs	72.029E-6
Sr	119.583E-6
Tc	647.914E-9
NH3	0
TRU	5.106E-9
Am	0.0
Pu	5.364E-9
NO	0
Si	1.909E-3
B	2.775E-3
SrCO3	0.0
MnO4-	0.0
Am(OH)3	0.0
O	12.711E-3
O2	0
Mn	281.912E-6
Pu(OH)4	0
P2O5	0.0
SO2	2.250E-9
CO2	0
I2	0
N2	0
Co	0.0
Eu	0.0
Zn	431.262E-6
Mg	48.034E-9
Zr	279.138E-6
Li	746.916E-6
NO2(g)	2.642E-6
CsIX	0.0
TcIX	0.0
Sugar	0.0
Co(OH)3	0.0
SO4IX	0.0
H+	448.433E-6
(TcO4)-	3.351E-3
B2O3 (s)	0
MnO2 (s)	0
H2O (s)	0
ZnO (s)	0
Li2O (s)	0
TOC (s)	0
Na2O (s)	0
K2O (s)	0
Al2O3(s)	0
CaO (s)	0
Cr2O3(s)	0
Fe2O3(s)	0
NiO (s)	0
MgO (s)	0
SiO2 (s)	0
ZrO2 (s)	0
BaO (s)	0
Anion(s)	0
La2O3(s)	0
PbO2 (s)	0
UO3 (s)	0.0

ACTIVITY:	TBq/d
Cs137	57.702
Sr90	810.404E-6
Tc99	1.272
Am241	2.288E-6
Co60	0
Eu154	6.258E-6
Eu155	6.249E-6
Pu238	232.234E-9
Pu239	1.858E-6
Pu240	505.486E-9
Pu241	18.388E-6
H3	0.0
C14	0
I129	0
OFP	263.271E-9
U233	14.280E-9
U235	310.341E-12
Cm243+4	0
Np237	112.489E-9
Sb125	7.767E-6
Cs137 (s)	0
Sr90 (s)	0.0
Tc99 (s)	0
Am241 (s)	0
Co60 (s)	0
Eu154 (s)	0
Eu155 (s)	0
Pu238 (s)	0
Pu239 (s)	0
Pu240 (s)	0
Pu241 (s)	0
H3 (s)	0
C14 (s)	0
I129 (s)	0
OFP (s)	0
U233 (s)	0
U235 (s)	0
Cm243+4(s)	0
Np237 (s)	0
Sb125 (s)	0
==========	
TOTAL	58.975
TOTAL TRU	4.996E-6
TOTAL Eu	12.507E-6
TOTAL SOLIDS	0.0

TOTAL PRECIPITATE	0.0 t/d
TOTAL SOLIDS	0.0 t/d
TOTAL MASS	7.545 t/d
TOTAL VOLUME	7.489 m3/d
DENSITY	1.007 t/m3

STREAM 124 Water Feed to HLW WESP

MASS:	t/d
Al	0
Ba	0
Ca	0
Cd	0
Cl	0
Cr	0
F	0
Fe	0
Hg	0
K	0
La	0
Ni	0
NO2	0
NO3	0
OH	0
Pb	0
PO4	0
SO4	0
TIC	0
TOC	0
U	0
Na	0
H2O	1.996
Cs	0
Sr	0
Tc	0
NH3	0
TRU	0
Am	0
Pu	0
NO	0
Si	0
B	0
SrCO3	0
MnO4-	0
Am(OH)3	0
O	0
O2	0
Mn	0
Pu(OH)4	0
P2O5	0
SO2	0
CO2	0
I2	0
N2	0
Co	0
Eu	0
Zn	0
Mg	0
Zr	0
Li	0
NO2(g)	0
CsIX	0
TcIX	0
Sugar	0
Co(OH)3	0
SO4IX	0
H+	0
(TcO4)-	0
B2O3 (s)	0
MnO2 (s)	0
H2O (s)	0
ZnO (s)	0
Li2O (s)	0
TOC (s)	0
Na2O (s)	0
K2O (s)	0
Al2O3(s)	0
CaO (s)	0
Cr2O3(s)	0
Fe2O3(s)	0
NiO (s)	0
MgO (s)	0
SiO2 (s)	0
ZrO2 (s)	0
BaO (s)	0
Anion(s)	0
La2O3(s)	0
PbO2 (s)	0
UO3 (s)	0

ACTIVITY:	TBq/d
Cs137	0
Sr90	0
Tc99	0
Am241	0
Co60	0
Eu154	0
Eu155	0
Pu238	0
Pu239	0
Pu240	0
Pu241	0
H3	0
C14	0
I129	0
OFP	0
U233	0
U235	0
Cm243+4	0
Np237	0
Sb125	0
Cs137 (s)	0
Sr90 (s)	0
Tc99 (s)	0
Am241 (s)	0
Co60 (s)	0
Eu154 (s)	0
Eu155 (s)	0
Pu238 (s)	0
Pu239 (s)	0
Pu240 (s)	0
Pu241 (s)	0
H3 (s)	0
C14 (s)	0
I129 (s)	0
OFP (s)	0
U233 (s)	0
U235 (s)	0
Cm243+4(s)	0
Np237 (s)	0
Sb125 (s)	0
TOTAL	0
TOTAL TRU	0
TOTAL Eu	0
TOTAL SOLIDS	0

TOTAL PRECIPITATE	0 t/d
TOTAL SOLIDS	0 t/d
TOTAL MASS	1.996 t/d
TOTAL VOLUME	2.000 m3/d
DENSITY	0.998 t/m3

STREAM 126 Liquid Effluent from HLW WESP

MASS:	t/d
Al	50.937E-6
Ba	2.004E-9
Ca	1.945E-6
Cd	27.126E-9
Cl	0
Cr	729.763E-9
F	0
Fe	39.750E-6
Hg	0
K	152.007E-6
La	2.176E-6
Ni	9.231E-6
NO2	0
NO3	0
OH	430.697E-6
Pb	4.739E-6
PO4	0
SO4	0
TIC	0
TOC	0.0
U	4.127E-6
Na	493.350E-6
H2O	2.647
Cs	23.202E-6
Sr	3.982E-6
Tc	124.985E-9
NH3	0
TRU	0.0
Am	0.0
Pu	0.0
NO	0
Si	63.570E-6
B	554.542E-6
SrCO3	0
MnO4-	0
Am(OH)3	0
O	254.376E-6
O2	0
Mn	9.388E-6
Pu(OH)4	0
P2O5	0
SO2	0
CO2	0
I2	0
N2	0
Co	0.0
Eu	0.0
Zn	14.361E-6
Mg	1.600E-9
Zr	9.295E-6
Li	149.085E-6
NO2(g)	0
CsIX	0
TcIX	0
Sugar	0.0
Co(OH)3	0
SO4IX	0
H+	0.0
(TcO4)-	647.922E-6
B2O3 (s)	0
MnO2 (s)	0
H2O (s)	0
ZnO (s)	0
Li2O (s)	0
TOC (s)	0
Na2O (s)	0
K2O (s)	0
Al2O3(s)	0
CaO (s)	0
Cr2O3(s)	0
Fe2O3(s)	0
NiO (s)	0
MgO (s)	0
SiO2 (s)	0
ZrO2 (s)	0
BaO (s)	0
Anion(s)	0
La2O3(s)	0
PbO2 (s)	0
UO3 (s)	0

ACTIVITY:	TBq/d
Cs137	18.563
Sr90	23.695E-6
Tc99	0.246
Am241	52.458E-9
Co60	0.0
Eu154	208.391E-9
Eu155	208.098E-9
Pu238	7.733E-9
Pu239	54.281E-9
Pu240	15.188E-9
Pu241	612.305E-9
H3	0.0
C14	0
I129	0
OFP	8.767E-9
U233	475.540E-12
U235	0.0
Cm243+4	0
Np237	3.746E-9
Sb125	258.634E-9
Cs137 (s)	0
Sr90 (s)	0.0
Tc99 (s)	0
Am241 (s)	0
Co60 (s)	0
Eu154 (s)	0
Eu155 (s)	0
Pu238 (s)	0
Pu239 (s)	0
Pu240 (s)	0
Pu241 (s)	0
H3 (s)	0
C14 (s)	0
I129 (s)	0
OFP (s)	0
U233 (s)	0
U235 (s)	0
Cm243+4(s)	0
Np237 (s)	0
Sb125 (s)	0
==========	
TOTAL	18.809
TOTAL TRU	133.406E-9
TOTAL Eu	416.489E-9
TOTAL SOLIDS	0.0

TOTAL PRECIPITATE	0 t/d
TOTAL SOLIDS	0 t/d
TOTAL MASS	2.650 t/d
TOTAL VOLUME	2.642 m3/d
DENSITY	1.003 t/m3

STREAM 125 HLW Melter Offgas from HLW WESP to HLW HEME

	MASS: t/d
Al	50.988E-9
Ba	0.0
Ca	1.947E-9
Cd	0.0
Cl	53.490E-6
Cr	0.0
F	8.324E-6
Fe	39.790E-9
Hg	0.0
K	152.159E-9
La	2.178E-9
Ni	9.240E-9
NO2	0.0
NO3	0.0
OH	0.0
Pb	4.744E-9
PO4	0.0
SO4	0.0
TIC	0.0
TOC	0.0
U	4.131E-9
Na	988.677E-9
H2O	3.361
Cs	800.069E-9
Sr	3.986E-9
Tc	4.310E-9
NH3	2.107E-3
TRU	0.0
Am	0.0
Pu	0.0
NO	22.891E-3
Si	63.634E-9
B	555.097E-9
SrCO3	0.0
MnO4-	0.0
Am(OH)3	0.0
O	457.514E-9
O2	11.210
Mn	9.397E-9
Pu(OH)4	0
P2O5	1.130E-6
SO2	4.591E-6
CO2	0.608
I2	9.185E-6
N2	39.809
Co	0.0
Eu	0.0
Zn	14.375E-9
Mg	0.0
Zr	9.305E-9
Li	298.768E-9
NO2(g)	26.416E-3
CsIX	0.0
TcIX	0.0
Sugar	0.0
Co(OH)3	0.0
SO4IX	0.0
H+	0.0
(TcO4)-	22.342E-6
B2O3 (s)	0
MnO2 (s)	0
H2O (s)	0
ZnO (s)	0
Li2O (s)	0
TOC (s)	0
Na2O (s)	0
K2O (s)	0
Al2O3(s)	0
CaO (s)	0
Cr2O3(s)	0
Fe2O3(s)	0
NiO (s)	0
MgO (s)	0
SiO2 (s)	0
ZrO2 (s)	0
BaO (s)	0
Anion(s)	0
La2O3(s)	0
PbO2 (s)	0
UO3 (s)	0.0

	ACTIVITY: TBq/d
Cs137	0.640
Sr90	23.719E-9
Tc99	8.482E-3
Am241	0.0
Co60	0.0
Eu154	208.600E-12
Eu155	208.306E-12
Pu238	0.0
Pu239	0.0
Pu240	0.0
Pu241	612.918E-12
H3	0.0
C14	0
I129	11.941E-6
OFP	0.0
U233	0.0
U235	0.0
Cm243+4	0.0
Np237	0.0
Sb125	258.893E-12
Cs137 (s)	0
Sr90 (s)	0.0
Tc99 (s)	0
Am241 (s)	0
Co60 (s)	0
Eu154 (s)	0
Eu155 (s)	0
Pu238 (s)	0
Pu239 (s)	0
Pu240 (s)	0
Pu241 (s)	0
H3 (s)	0
C14 (s)	0
I129 (s)	0
OFP (s)	0
U233 (s)	0
U235 (s)	0
Cm243+4(s)	0
Np237 (s)	0
Sb125 (s)	0
TOTAL	0.649
TOTAL TRU	133.539E-12
TOTAL Eu	416.906E-12
TOTAL SOLIDS	0.0

TOTAL PRECIPITATE	0.0	t/d
TOTAL SOLIDS	0.0	t/d
TOTAL MASS	55.040	t/d
TOTAL VOLUME	48.768E3	m3/d
DENSITY	1.129E-3	t/m3

STREAM 127 HLW Vessel Vent Offgas

MASS:	t/d
Al	0
Ba	0
Ca	0
Cd	0
Cl	0
Cr	0
F	0
Fe	0
Hg	0
K	0
La	0
Ni	0
NO2	0
NO3	0
OH	0
Pb	0
PO4	0
SO4	0
TIC	0
TOC	0
U	0
Na	0
H2O	1.781
Cs	31.200E-9
Sr	0.0
Tc	1.560E-9
NH3	0
TRU	0.0
Am	0.0
Pu	0.0
NO	0
Si	0
B	0
SrCO3	0
MnO4-	0
Am(OH)3	0
O	0
O2	4.567
Mn	0
Pu(OH)4	0
P2O5	0
SO2	0
CO2	10.282E-3
I2	0
N2	15.986
Co	0
Eu	0
Zn	0
Mg	0
Zr	0
Li	0
NO2(g)	0
CsIX	0
TcIX	0
Sugar	0
Co(OH)3	0
SO4IX	0
H+	0
(TcO4)-	0
B2O3 (s)	0
MnO2 (s)	0
H2O (s)	0
ZnO (s)	0
Li2O (s)	0
TOC (s)	0
Na2O (s)	0
K2O (s)	0
Al2O3(s)	0
CaO (s)	0
Cr2O3(s)	0
Fe2O3(s)	0
NiO (s)	0
MgO (s)	0
SiO2 (s)	0
ZrO2 (s)	0
BaO (s)	0
Anion(s)	0
La2O3(s)	0
PbO2 (s)	0
UO3 (s)	0

ACTIVITY:	TBq/d
Cs137	99.840E-3
Sr90	99.840E-6
Tc99	998.400E-9
Am241	720.000E-9
Co60	0
Eu154	0
Eu155	0
Pu238	0
Pu239	230.000E-9
Pu240	49.900E-9
Pu241	0
H3	0
C14	0
I129	0
OFP	0
U233	0
U235	0
Cm243+4	0
Np237	0
Sb125	0
Cs137 (s)	0
Sr90 (s)	0
Tc99 (s)	0
Am241 (s)	0
Co60 (s)	0
Eu154 (s)	0
Eu155 (s)	0
Pu238 (s)	0
Pu239 (s)	0
Pu240 (s)	0
Pu241 (s)	0
H3 (s)	0
C14 (s)	0
I129 (s)	0
OFP (s)	0
U233 (s)	0
U235 (s)	0
Cm243+4(s)	0
Np237 (s)	0
Sb125 (s)	0
==========	
TOTAL	99.942E-3
TOTAL TRU	999.900E-9
TOTAL Eu	0
TOTAL SOLIDS	0

TOTAL PRECIPITATE	0	t/d
TOTAL SOLIDS	0	t/d
TOTAL MASS	22.344	t/d
TOTAL VOLUME	20.760E3	m3/d
DENSITY	1.076E-3	t/m3

STREAM 134 HLW Vessel Vent Offgas to HLW HEME

MASS:	t/d
Al	50.988E-9
Ba	0.0
Ca	1.947E-9
Cd	0.0
Cl	53.490E-6
Cr	0.0
F	8.324E-6
Fe	39.790E-9
Hg	0.0
K	152.159E-9
La	2.178E-9
Ni	9.240E-9
NO2	0.0
NO3	0.0
OH	0.0
Pb	4.744E-9
PO4	0.0
SO4	0.0
TIC	0.0
TOC	0.0
U	4.131E-9
Na	988.677E-9
H2O	5.142
Cs	831.269E-9
Sr	4.005E-9
Tc	5.870E-9
NH3	2.107E-3
TRU	0.0
Am	0.0
Pu	0.0
NO	22.891E-3
Si	63.634E-9
B	555.097E-9
SrCO3	0.0
MnO4-	0.0
Am(OH)3	0.0
O	457.514E-9
O2	15.778
Mn	9.397E-9
Pu(OH)4	0
P2O5	1.130E-6
SO2	4.591E-6
CO2	0.618
I2	9.185E-6
N2	55.794
Co	0.0
Eu	0.0
Zn	14.375E-9
Mg	0.0
Zr	9.305E-9
Li	298.768E-9
NO2(g)	26.416E-3
CsIX	0.0
TcIX	0.0
Sugar	0.0
Co(OH)3	0.0
SO4IX	0.0
H+	0.0
(TcO4)-	22.342E-6
B2O3 (s)	0
MnO2 (s)	0
H2O (s)	0
ZnO (s)	0
Li2O (s)	0
TOC (s)	0
Na2O (s)	0
K2O (s)	0
Al2O3(s)	0
CaO (s)	0
Cr2O3(s)	0
Fe2O3(s)	0
NiO (s)	0
MgO (s)	0
SiO2 (s)	0
ZrO2 (s)	0
BaO (s)	0
Anion(s)	0
La2O3(s)	0
PbO2 (s)	0
UO3 (s)	0.0

ACTIVITY:	TBq/d
Cs137	0.740
Sr90	99.864E-6
Tc99	8.483E-3
Am241	720.053E-9
Co60	0.0
Eu154	208.600E-12
Eu155	208.306E-12
Pu238	0.0
Pu239	230.054E-9
Pu240	49.915E-9
Pu241	612.918E-12
H3	0.0
C14	0
I129	11.941E-6
OFP	0.0
U233	0.0
U235	0.0
Cm243+4	0.0
Np237	0.0
Sb125	258.893E-12
Cs137 (s)	0
Sr90 (s)	0.0
Tc99 (s)	0
Am241 (s)	0
Co60 (s)	0
Eu154 (s)	0
Eu155 (s)	0
Pu238 (s)	0
Pu239 (s)	0
Pu240 (s)	0
Pu241 (s)	0
H3 (s)	0
C14 (s)	0
I129 (s)	0
OFP (s)	0
U233 (s)	0
U235 (s)	0
Cm243+4(s)	0
Np237 (s)	0
Sb125 (s)	0
TOTAL	0.749
TOTAL TRU	1.000E-6
TOTAL Eu	416.906E-12
TOTAL SOLIDS	0.0

TOTAL PRECIPITATE	0.0	t/d
TOTAL SOLIDS	0.0	t/d
TOTAL MASS	77.384	t/d
TOTAL VOLUME	71.363E3	m3/d
DENSITY	1.084E-3	t/m3

STREAM 128 HLW HEME Condensate

	MASS: t/d
Al	50.478E-9
Ba	0.0
Ca	1.927E-9
Cd	0.0
Cl	53.490E-6
Cr	0.0
F	8.324E-6
Fe	39.392E-9
Hg	0
K	150.638E-9
La	2.156E-9
Ni	9.148E-9
NO2	0.0
NO3	0.0
OH	0
Pb	4.649E-9
PO4	0.0
SO4	0.0
TIC	0.0
TOC	0.0
U	4.089E-9
Na	978.790E-9
H2O	0.438
Cs	822.956E-9
Sr	3.965E-9
Tc	5.752E-9
NH3	0
TRU	0.0
Am	0.0
Pu	0.0
NO	0
Si	62.998E-9
B	543.995E-9
SrCO3	0.0
MnO4-	0.0
Am(OH)3	0.0
O	452.939E-9
O2	0.0
Mn	9.303E-9
Pu(OH)4	0
P2O5	1.017E-6
SO2	4.132E-6
CO2	0
I2	0
N2	0
Co	0.0
Eu	0.0
Zn	14.232E-9
Mg	0.0
Zr	9.212E-9
Li	295.780E-9
NO2(g)	0.0
CsIX	0.0
TcIX	0.0
Sugar	0.0
Co(OH)3	0.0
SO4IX	0.0
H+	0
(TcO4)-	21.895E-6
B2O3 (s)	0
MnO2 (s)	0
H2O (s)	0
ZnO (s)	0
Li2O (s)	0
TOC (s)	0
Na2O (s)	0
K2O (s)	0
Al2O3(s)	0
CaO (s)	0
Cr2O3(s)	0
Fe2O3(s)	0
NiO (s)	0
MgO (s)	0
SiO2 (s)	0
ZrO2 (s)	0
BaO (s)	0
Anion(s)	0
La2O3(s)	0
PbO2 (s)	0
UO3 (s)	0.0

	ACTIVITY: TBq/d
Cs137	0.733
Sr90	98.865E-6
Tc99	8.314E-3
Am241	712.852E-9
Co60	0.0
Eu154	206.514E-12
Eu155	206.223E-12
Pu238	0.0
Pu239	227.754E-9
Pu240	49.416E-9
Pu241	606.789E-12
H3	0.0
C14	0
I129	0
OFP	0.0
U233	0.0
U235	0.0
Cm243+4	0.0
Np237	0.0
Sb125	256.304E-12
Cs137 (s)	0
Sr90 (s)	0.0
Tc99 (s)	0
Am241 (s)	0
Co60 (s)	0
Eu154 (s)	0
Eu155 (s)	0
Pu238 (s)	0
Pu239 (s)	0
Pu240 (s)	0
Pu241 (s)	0
H3 (s)	0
C14 (s)	0
I129 (s)	0
OFP (s)	0
U233 (s)	0
U235 (s)	0
Cm243+4(s)	0
Np237 (s)	0
Sb125 (s)	0
TOTAL	0.741
TOTAL TRU	990.033E-9
TOTAL Eu	412.737E-12
TOTAL SOLIDS	0.0

TOTAL PRECIPITATE	0.0 t/d
TOTAL SOLIDS	0.0 t/d
TOTAL MASS	0.438 t/d
TOTAL VOLUME	0.440 m3/d
DENSITY	0.997 t/m3

STREAM 131 Combined HLW Offgas to HLW HEPA Filters

MASS:	t/d
Al	0.0
Ba	0.0
Ca	0.0
Cd	0.0
Cl	0.0
Cr	0.0
F	0.0
Fe	0.0
Hg	0.0
K	1.522E-9
La	0.0
Ni	0.0
NO2	0.0
NO3	0.0
OH	0.0
Pb	0.0
PO4	0.0
SO4	0.0
TIC	0.0
TOC	0.0
U	0.0
Na	9.887E-9
H2O	4.704
Cs	8.313E-9
Sr	0.0
Tc	0.0
NH3	2.107E-3
TRU	0.0
Am	0.0
Pu	0.0
NO	22.891E-3
Si	0.0
B	11.102E-9
SrCO3	0.0
MnO4-	0.0
Am(OH)3	0.0
O	4.575E-9
O2	15.778
Mn	0.0
Pu(OH)4	0
P2O5	113.043E-9
SO2	459.127E-9
CO2	0.618
I2	9.185E-6
N2	55.794
Co	0.0
Eu	0.0
Zn	0.0
Mg	0.0
Zr	0.0
Li	2.988E-9
NO2(g)	26.416E-3
CsIX	0.0
TcIX	0.0
Sugar	0.0
Co(OH)3	0.0
SO4IX	0.0
H+	0.0
(TcO4)-	446.842E-9
B2O3 (s)	0
MnO2 (s)	0
H2O (s)	0
ZnO (s)	0
Li2O (s)	0
TOC (s)	0
Na2O (s)	0
K2O (s)	0
Al2O3(s)	0
CaO (s)	0
Cr2O3(s)	0
Fe2O3(s)	0
NiO (s)	0
MgO (s)	0
SiO2 (s)	0
ZrO2 (s)	0
BaO (s)	0
Anion(s)	0
La2O3(s)	0
PbO2 (s)	0
UO3 (s)	0.0

ACTIVITY:	TBq/d
Cs137	7.399E-3
Sr90	998.637E-9
Tc99	169.666E-6
Am241	7.201E-9
Co60	0.0
Eu154	0.0
Eu155	0.0
Pu238	0.0
Pu239	2.301E-9
Pu240	499.152E-12
Pu241	0.0
H3	0.0
C14	0
I129	11.941E-6
OFP	0.0
U233	0.0
U235	0.0
Cm243+4	0
Np237	0.0
Sb125	0.0
Cs137 (s)	0
Sr90 (s)	0.0
Tc99 (s)	0
Am241 (s)	0
Co60 (s)	0
Eu154 (s)	0
Eu155 (s)	0
Pu238 (s)	0
Pu239 (s)	0
Pu240 (s)	0
Pu241 (s)	0
H3 (s)	0
C14 (s)	0
I129 (s)	0
OFP (s)	0
U233 (s)	0
U235 (s)	0
Cm243+4(s)	0
Np237 (s)	0
Sb125 (s)	0
==========	
TOTAL	7.582E-3
TOTAL TRU	10.000E-9
TOTAL Eu	0.0
TOTAL SOLIDS	0.0

TOTAL PRECIPITATE	0.0	t/d
TOTAL SOLIDS	0.0	t/d
TOTAL MASS	76.945	t/d
TOTAL VOLUME	70.739E3	m3/d
DENSITY	1.088E-3	t/m3

STREAM 177 HLW HEPA Solids

	MASS: t/d		ACTIVITY: TBq/d
Al	0.0	Cs137	7.399E-3
Ba	0.0	Sr90	998.627E-9
Ca	0.0	Tc99	152.699E-6
Cd	0.0	Am241	7.200E-9
Cl	0	Co60	0.0
Cr	0.0	Eu154	0.0
F	0	Eu155	0.0
Fe	0.0	Pu238	0.0
Hg	0	Pu239	2.301E-9
K	1.522E-9	Pu240	499.147E-12
La	0.0	Pu241	0.0
Ni	0.0	H3	0
NO2	0	C14	0
NO3	0	I129	0
OH	0	OFP	0.0
Pb	0.0	U233	0.0
PO4	0	U235	0.0
SO4	0	Cm243+4	0
TIC	0	Np237	0.0
TOC	0	Sb125	0.0
U	0.0	Cs137 (s)	0
Na	9.887E-9	Sr90 (s)	0.0
H2O	0	Tc99 (s)	0
Cs	8.313E-9	Am241 (s)	0
Sr	0.0	Co60 (s)	0
Tc	0.0	Eu154 (s)	0
NH3	0	Eu155 (s)	0
TRU	0.0	Pu238 (s)	0
Am	0.0	Pu239 (s)	0
Pu	0.0	Pu240 (s)	0
NO	0	Pu241 (s)	0
Si	0.0	H3 (s)	0
B	11.102E-9	C14 (s)	0
SrCO3	0	I129 (s)	0
MnO4-	0	OFP (s)	0
Am(OH)3	0	U233 (s)	0
O	4.575E-9	U235 (s)	0
O2	0	Cm243+4(s)	0
Mn	0.0	Np237 (s)	0
Pu(OH)4	0	Sb125 (s)	0
P2O5	0		==========
SO2	0	TOTAL	7.553E-3
CO2	0	TOTAL TRU	10.000E-9
I2	0	TOTAL Eu	0.0
N2	0	TOTAL SOLIDS	0.0
Co	0.0		
Eu	0.0		
Zn	0.0		
Mg	0.0		
Zr	0.0		
Li	2.988E-9		
NO2(g)	0		
CsIX	0		
TcIX	0		
Sugar	0		
Co(OH)3	0		
SO4IX	0		
H+	0		
(TcO4)-	402.158E-9		
B2O3 (s)	0		
MnO2 (s)	0		
H2O (s)	0		
ZnO (s)	0		
Li2O (s)	0		
TOC (s)	0		
Na2O (s)	0		
K2O (s)	0		
Al2O3(s)	0		
CaO (s)	0		
Cr2O3(s)	0		
Fe2O3(s)	0		
NiO (s)	0		
MgO (s)	0		
SiO2 (s)	0		
ZrO2 (s)	0		
BaO (s)	0	TOTAL PRECIPITATE	0 t/d
Anion(s)	0	TOTAL SOLIDS	0 t/d
La2O3(s)	0	TOTAL MASS	442.889E-9 t/d
PbO2 (s)	0	TOTAL VOLUME	276.806E-9 m3/d
UO3 (s)	0	DENSITY	1.600 t/m3

STREAM 132 HLW HEPA Off-Gas to HLW Extract Fan Air Addition Gas

MASS:	t/d
Al	0.0
Ba	0.0
Ca	0.0
Cd	0.0
Cl	0.0
Cr	0.0
F	0.0
Fe	0.0
Hg	0.0
K	0.0
La	0.0
Ni	0.0
NO2	0.0
NO3	0.0
OH	0.0
Pb	0.0
PO4	0.0
SO4	0.0
TIC	0.0
TOC	0.0
U	0.0
Na	0.0
H2O	4.704
Cs	0.0
Sr	0.0
Tc	0.0
NH3	2.107E-3
TRU	0.0
Am	0.0
Pu	0.0
NO	22.891E-3
Si	0.0
B	0.0
SrCO3	0.0
MnO4-	0.0
Am(OH)3	0.0
O	0.0
O2	15.778
Mn	0.0
Pu(OH)4	0
P2O5	113.043E-9
SO2	459.127E-9
CO2	0.618
I2	9.185E-6
N2	55.794
Co	0.0
Eu	0.0
Zn	0.0
Mg	0.0
Zr	0.0
Li	0.0
NO2(g)	26.416E-3
CsIX	0.0
TcIX	0.0
Sugar	0.0
Co(OH)3	0.0
SO4IX	0.0
H+	0.0
(TcO4)-	44.684E-9
B2O3 (s)	0
MnO2 (s)	0
H2O (s)	0
ZnO (s)	0
Li2O (s)	0
TOC (s)	0
Na2O (s)	0
K2O (s)	0
Al2O3(s)	0
CaO (s)	0
Cr2O3(s)	0
Fe2O3(s)	0
NiO (s)	0
MgO (s)	0
SiO2 (s)	0
ZrO2 (s)	0
BaO (s)	0
Anion(s)	0
La2O3(s)	0
PbO2 (s)	0
UO3 (s)	0.0

ACTIVITY:	TBq/d
Cs137	73.995E-9
Sr90	0.0
Tc99	16.967E-6
Am241	0.0
Co60	0.0
Eu154	0.0
Eu155	0.0
Pu238	0.0
Pu239	0.0
Pu240	0.0
Pu241	0.0
H3	0.0
C14	0
I129	11.941E-6
OFP	0.0
U233	0.0
U235	0.0
Cm243+4	0
Np237	0.0
Sb125	0.0
Cs137 (s)	0
Sr90 (s)	0.0
Tc99 (s)	0
Am241 (s)	0
Co60 (s)	0
Eu154 (s)	0
Eu155 (s)	0
Pu238 (s)	0
Pu239 (s)	0
Pu240 (s)	0
Pu241 (s)	0
H3 (s)	0
C14 (s)	0
I129 (s)	0
OFP (s)	0
U233 (s)	0
U235 (s)	0
Cm243+4(s)	0
Np237 (s)	0
Sb125 (s)	0
TOTAL	28.981E-6
TOTAL TRU	0.0
TOTAL Eu	0.0
TOTAL SOLIDS	0.0

TOTAL PRECIPITATE	0.0	t/d
TOTAL SOLIDS	0.0	t/d
TOTAL MASS	76.945	t/d
TOTAL VOLUME	70.739E3	m3/d
DENSITY	1.088E-3	t/m3

STREAM 100 HLW Extract Fan Air

MASS:	t/d
Al	0
Ba	0
Ca	0
Cd	0
Cl	0
Cr	0
F	0
Fe	0
Hg	0
K	0
La	0
Ni	0
NO2	0
NO3	0
OH	0
Pb	0
PO4	0
SO4	0
TIC	0
TOC	0
U	0
Na	0
H2O	15.808E-3
Cs	0
Sr	0
Tc	0
NH3	0
TRU	0
Am	0
Pu	0
NO	0
Si	0
B	0
SrCO3	0
MnO4-	0
Am(OH)3	0
O	0
O2	0.348
Mn	0
Pu(OH)4	0
P2O5	0
SO2	0
CO2	784.096E-6
I2	0
N2	1.219
Co	0
Eu	0
Zn	0
Mg	0
Zr	0
Li	0
NO2(g)	0
CsIX	0
TcIX	0
Sugar	0
Co(OH)3	0
SO4IX	0
H+	0
(TcO4)-	0
B2O3 (s)	0
MnO2 (s)	0
H2O (s)	0
ZnO (s)	0
Li2O (s)	0
TOC (s)	0
Na2O (s)	0
K2O (s)	0
Al2O3(s)	0
CaO (s)	0
Cr2O3(s)	0
Fe2O3(s)	0
NiO (s)	0
MgO (s)	0
SiO2 (s)	0
ZrO2 (s)	0
BaO (s)	0
Anion(s)	0
La2O3(s)	0
PbO2 (s)	0
UO3 (s)	0

ACTIVITY:	TBq/d
Cs137	0
Sr90	0
Tc99	0
Am241	0
Co60	0
Eu154	0
Eu155	0
Pu238	0
Pu239	0
Pu240	0
Pu241	0
H3	0
C14	0
I129	0
OFP	0
U233	0
U235	0
Cm243+4	0
Np237	0
Sb125	0
Cs137 (s)	0
Sr90 (s)	0
Tc99 (s)	0
Am241 (s)	0
Co60 (s)	0
Eu154 (s)	0
Eu155 (s)	0
Pu238 (s)	0
Pu239 (s)	0
Pu240 (s)	0
Pu241 (s)	0
H3 (s)	0
C14 (s)	0
I129 (s)	0
OFP (s)	0
U233 (s)	0
U235 (s)	0
Cm243+4(s)	0
Np237 (s)	0
Sb125 (s)	0
==========	
TOTAL	0
TOTAL TRU	0
TOTAL Eu	0
TOTAL SOLIDS	0

TOTAL PRECIPITATE	0	t/d
TOTAL SOLIDS	0	t/d
TOTAL MASS	1.584	t/d
TOTAL VOLUME	1.338E3	m3/d
DENSITY	1.184E-3	t/m3

STREAM 133 HLW Fan Mix Offgas to HLW Caustic Scrubber

MASS:	t/d
Al	0.0
Ba	0.0
Ca	0.0
Cd	0.0
Cl	0.0
Cr	0.0
F	0.0
Fe	0.0
Hg	0.0
K	0.0
La	0.0
Ni	0.0
NO2	0.0
NO3	0.0
OH	0.0
Pb	0.0
PO4	0.0
SO4	0.0
TIC	0.0
TOC	0.0
U	0.0
Na	0.0
H2O	4.719
Cs	0.0
Sr	0.0
Tc	0.0
NH3	2.107E-3
TRU	0.0
Am	0.0
Pu	0.0
NO	22.891E-3
Si	0.0
B	0.0
SrCO3	0.0
MnO4-	0.0
Am(OH)3	0.0
O	0.0
O2	16.126
Mn	0.0
Pu(OH)4	0
P2O5	113.043E-9
SO2	459.127E-9
CO2	0.619
I2	9.185E-6
N2	57.014
Co	0.0
Eu	0.0
Zn	0.0
Mg	0.0
Zr	0.0
Li	0.0
NO2(g)	26.416E-3
CsIX	0.0
TcIX	0.0
Sugar	0.0
Co(OH)3	0.0
SO4IX	0.0
H+	0.0
(TcO4)-	44.684E-9
B2O3 (s)	0
MnO2 (s)	0
H2O (s)	0
ZnO (s)	0
Li2O (s)	0
TOC (s)	0
Na2O (s)	0
K2O (s)	0
Al2O3(s)	0
CaO (s)	0
Cr2O3(s)	0
Fe2O3(s)	0
NiO (s)	0
MgO (s)	0
SiO2 (s)	0
ZrO2 (s)	0
BaO (s)	0
Anion(s)	0
La2O3(s)	0
PbO2 (s)	0
UO3 (s)	0.0

ACTIVITY:	TBq/d
Cs137	73.995E-9
Sr90	0.0
Tc99	16.967E-6
Am241	0.0
Co60	0.0
Eu154	0.0
Eu155	0.0
Pu238	0.0
Pu239	0.0
Pu240	0.0
Pu241	0.0
H3	0.0
C14	0
I129	11.941E-6
OFP	0.0
U233	0.0
U235	0.0
Cm243+4	0
Np237	0.0
Sb125	0.0
Cs137 (s)	0
Sr90 (s)	0.0
Tc99 (s)	0
Am241 (s)	0
Co60 (s)	0
Eu154 (s)	0
Eu155 (s)	0
Pu238 (s)	0
Pu239 (s)	0
Pu240 (s)	0
Pu241 (s)	0
H3 (s)	0
C14 (s)	0
I129 (s)	0
OFP (s)	0
U233 (s)	0
U235 (s)	0
Cm243+4(s)	0
Np237 (s)	0
Sb125 (s)	0
==========	
TOTAL	28.981E-6
TOTAL TRU	0.0
TOTAL Eu	0.0
TOTAL SOLIDS	0.0

TOTAL PRECIPITATE	0.0	t/d
TOTAL SOLIDS	0.0	t/d
TOTAL MASS	78.529	t/d
TOTAL VOLUME	70.537E3	m3/d
DENSITY	1.113E-3	t/m3

STREAM 144 5M NaOH Feed to HLW Offgas Caustic Scrubber

MASS:	t/d
Al	0
Ba	0
Ca	0
Cd	0
Cl	0
Cr	0
F	0
Fe	0
Hg	0
K	0
La	0
Ni	0
NO2	0
NO3	0
OH	0.206
Pb	0
PO4	0
SO4	0
TIC	0
TOC	0
U	0
Na	0.278
H2O	2.385
Cs	0
Sr	0
Tc	0
NH3	0
TRU	0
Am	0
Pu	0
NO	0
Si	0
B	0
SrCO3	0
MnO4-	0
Am(OH)3	0
O	0
O2	0
Mn	0
Pu(OH)4	0
P2O5	0
SO2	0
CO2	0
I2	0
N2	0
Co	0
Eu	0
Zn	0
Mg	0
Zr	0
Li	0
NO2(g)	0
CsIX	0
TcIX	0
Sugar	0
Co(OH)3	0
SO4IX	0
H+	0
(TcO4)-	0
B2O3 (s)	0
MnO2 (s)	0
H2O (s)	0
ZnO (s)	0
Li2O (s)	0
TOC (s)	0
Na2O (s)	0
K2O (s)	0
Al2O3(s)	0
CaO (s)	0
Cr2O3(s)	0
Fe2O3(s)	0
NiO (s)	0
MgO (s)	0
SiO2 (s)	0
ZrO2 (s)	0
BaO (s)	0
Anion(s)	0
La2O3(s)	0
PbO2 (s)	0
UO3 (s)	0

ACTIVITY:	TBq/d
Cs137	0
Sr90	0
Tc99	0
Am241	0
Co60	0
Eu154	0
Eu155	0
Pu238	0
Pu239	0
Pu240	0
Pu241	0
H3	0
C14	0
I129	0
OFP	0
U233	0
U235	0
Cm243+4	0
Np237	0
Sb125	0
Cs137 (s)	0
Sr90 (s)	0
Tc99 (s)	0
Am241 (s)	0
Co60 (s)	0
Eu154 (s)	0
Eu155 (s)	0
Pu238 (s)	0
Pu239 (s)	0
Pu240 (s)	0
Pu241 (s)	0
H3 (s)	0
C14 (s)	0
I129 (s)	0
OFP (s)	0
U233 (s)	0
U235 (s)	0
Cm243+4(s)	0
Np237 (s)	0
Sb125 (s)	0
==========	
TOTAL	0
TOTAL TRU	0
TOTAL Eu	0
TOTAL SOLIDS	0

TOTAL PRECIPITATE	0 t/d
TOTAL SOLIDS	0 t/d
TOTAL MASS	2.869 t/d
TOTAL VOLUME	2.419 m3/d
DENSITY	1.186 t/m3

STREAM 135 HLW Offgas Caustic Scrubber Bottoms

MASS:	t/d
Al	0.0
Ba	0.0
Ca	0.0
Cd	0.0
Cl	0.0
Cr	0.0
F	0.0
Fe	0.0
Hg	0.0
K	0.0
La	0.0
Ni	0.0
NO2	0.0
NO3	33.507E-3
OH	0.101
Pb	0.0
PO4	75.673E-9
SO4	681.382E-9
TIC	0.169
TOC	0.0
U	0.0
Na	0.278
H2O	5.159
Cs	0.0
Sr	0.0
Tc	0.0
NH3	2.086E-3
TRU	0.0
Am	0.0
Pu	0.0
NO	0
Si	0.0
B	0.0
SrCO3	0.0
MnO4-	0.0
Am(OH)3	0.0
O	0.0
O2	0
Mn	0.0
Pu(OH)4	0
P2O5	0.0
SO2	0.0
CO2	0.371
I2	4.593E-6
N2	0
Co	0.0
Eu	0.0
Zn	0.0
Mg	0.0
Zr	0.0
Li	0.0
NO2(g)	2.486E-6
CsIX	0.0
TcIX	0.0
Sugar	0.0
Co(OH)3	0.0
SO4IX	0.0
H+	616.961E-9
(TcO4)-	22.342E-9
B2O3 (s)	0
MnO2 (s)	0
H2O (s)	0
ZnO (s)	0
Li2O (s)	0
TOC (s)	0
Na2O (s)	0
K2O (s)	0
Al2O3(s)	0
CaO (s)	0
Cr2O3(s)	0
Fe2O3(s)	0
NiO (s)	0
MgO (s)	0
SiO2 (s)	0
ZrO2 (s)	0
BaO (s)	0
Anion(s)	0
La2O3(s)	0
PbO2 (s)	0
UO3 (s)	0.0

ACTIVITY:	TBq/d
Cs137	36.997E-9
Sr90	0.0
Tc99	8.483E-6
Am241	0.0
Co60	0.0
Eu154	0.0
Eu155	0.0
Pu238	0.0
Pu239	0.0
Pu240	0.0
Pu241	0.0
H3	0.0
C14	0
I129	11.821E-6
OFP	0.0
U233	0.0
U235	0.0
Cm243+4	0
Np237	0.0
Sb125	0.0
Cs137 (s)	0
Sr90 (s)	0.0
Tc99 (s)	0
Am241 (s)	0
Co60 (s)	0
Eu154 (s)	0
Eu155 (s)	0
Pu238 (s)	0
Pu239 (s)	0
Pu240 (s)	0
Pu241 (s)	0
H3 (s)	0
C14 (s)	0
I129 (s)	0
OFP (s)	0
U233 (s)	0
U235 (s)	0
Cm243+4(s)	0
Np237 (s)	0
Sb125 (s)	0
==========	
TOTAL	20.342E-6
TOTAL TRU	0.0
TOTAL Eu	0.0
TOTAL SOLIDS	0.0

TOTAL PRECIPITATE	0.0 t/d
TOTAL SOLIDS	0.0 t/d
TOTAL MASS	6.114 t/d
TOTAL VOLUME	5.927 m3/d
DENSITY	1.031 t/m3

STREAM 136 HLW Caustic Scrubber Offgas to HLW VOC

MASS:	t/d	ACTIVITY:	TBq/d
Al	0.0	Cs137	36.997E-9
Ba	0.0	Sr90	0.0
Ca	0.0	Tc99	8.483E-6
Cd	0.0	Am241	0.0
Cl	0.0	Co60	0.0
Cr	0.0	Eu154	0.0
F	0.0	Eu155	0.0
Fe	0.0	Pu238	0.0
Hg	0.0	Pu239	0.0
K	0.0	Pu240	0.0
La	0.0	Pu241	0.0
Ni	0.0	H3	0.0
NO2	0.0	C14	0
NO3	0.0	I129	119.407E-9
OH	0.0	OFP	0.0
Pb	0.0	U233	0.0
PO4	0.0	U235	0.0
SO4	0.0	Cm243+4	0
TIC	0.0	Np237	0.0
TOC	0.0	Sb125	0.0
U	0.0	Cs137 (s)	0
Na	0.0	Sr90 (s)	0.0
H2O	2.001	Tc99 (s)	0
Cs	0.0	Am241 (s)	0
Sr	0.0	Co60 (s)	0
Tc	0.0	Eu154 (s)	0
NH3	21.074E-6	Eu155 (s)	0
TRU	0.0	Pu238 (s)	0
Am	0.0	Pu239 (s)	0
Pu	0.0	Pu240 (s)	0
NO	22.891E-3	Pu241 (s)	0
Si	0.0	H3 (s)	0
B	0.0	C14 (s)	0
SrCO3	0.0	I129 (s)	0
MnO4-	0.0	OFP (s)	0
Am(OH)3	0.0	U233 (s)	0
O	0.0	U235 (s)	0
O2	16.122	Cm243+4(s)	0
Mn	0.0	Np237 (s)	0
Pu(OH)4	0	Sb125 (s)	0
P2O5	56.522E-9		==========
SO2	4.591E-9	TOTAL	8.640E-6
CO2	0.124	TOTAL TRU	0.0
I2	4.593E-6	TOTAL Eu	0.0
N2	57.014	TOTAL SOLIDS	0.0
Co	0.0		
Eu	0.0		
Zn	0.0		
Mg	0.0		
Zr	0.0		
Li	0.0		
NO2(g)	1.554E-3		
CsIX	0.0		
TcIX	0.0		
Sugar	0.0		
Co(OH)3	0.0		
SO4IX	0.0		
H+	0.0		
(TcO4)-	22.342E-9		
B2O3 (s)	0		
MnO2 (s)	0		
H2O (s)	0		
ZnO (s)	0		
Li2O (s)	0		
TOC (s)	0		
Na2O (s)	0		
K2O (s)	0		
Al2O3(s)	0		
CaO (s)	0		
Cr2O3(s)	0		
Fe2O3(s)	0		
NiO (s)	0		
MgO (s)	0		
SiO2 (s)	0		
ZrO2 (s)	0		
BaO (s)	0	TOTAL PRECIPITATE	0.0 t/d
Anion(s)	0	TOTAL SOLIDS	0.0 t/d
La2O3(s)	0	TOTAL MASS	75.284 t/d
PbO2 (s)	0	TOTAL VOLUME	66.455E3 m3/d
UO3 (s)	0.0	DENSITY	1.133E-3 t/m3

STREAM 106 HLW VOC Spent Catalyst

MASS:	t/d
Al	0.0
Ba	0.0
Ca	0.0
Cd	0.0
Cl	0.0
Cr	0.0
F	0.0
Fe	0.0
Hg	0.0
K	0.0
La	0.0
Ni	0.0
NO2	0.0
NO3	0.0
OH	0.0
Pb	0.0
PO4	0.0
SO4	0.0
TIC	0.0
TOC	0.0
U	0.0
Na	0.0
H2O	0
Cs	0.0
Sr	0.0
Tc	0.0
NH3	0
TRU	0.0
Am	0.0
Pu	0.0
NO	0.0
Si	0.0
B	0.0
SrCO3	0.0
MnO4-	0.0
Am(OH)3	0.0
O	0.0
O2	0.0
Mn	0.0
Pu(OH)4	0.0
P2O5	0.0
SO2	0.0
CO2	0
I2	0.0
N2	0
Co	0.0
Eu	0.0
Zn	0.0
Mg	0.0
Zr	0.0
Li	0.0
NO2(g)	0.0
CsIX	0.0
TcIX	0.0
Sugar	0.0
Co(OH)3	0.0
SO4IX	0.0
H+	0.0
(TcO4)-	0.0
B2O3 (s)	0.0
MnO2 (s)	0.0
H2O (s)	0.0
ZnO (s)	0.0
Li2O (s)	0.0
TOC (s)	0.0
Na2O (s)	0.0
K2O (s)	0.0
Al2O3(s)	0.0
CaO (s)	0.0
Cr2O3(s)	0.0
Fe2O3(s)	0.0
NiO (s)	0.0
MgO (s)	0.0
SiO2 (s)	0.0
ZrO2 (s)	0.0
BaO (s)	0.0
Anion(s)	0.0
La2O3(s)	0.0
PbO2 (s)	0.0
UO3 (s)	0.0

ACTIVITY:	TBq/d
Cs137	0
Sr90	0
Tc99	0
Am241	0
Co60	0
Eu154	0
Eu155	0
Pu238	0
Pu239	0
Pu240	0
Pu241	0
H3	0
C14	0
I129	0
OFP	0
U233	0
U235	0
Cm243+4	0
Np237	0
Sb125	0
Cs137 (s)	0
Sr90 (s)	0
Tc99 (s)	0
Am241 (s)	0
Co60 (s)	0
Eu154 (s)	0
Eu155 (s)	0
Pu238 (s)	0
Pu239 (s)	0
Pu240 (s)	0
Pu241 (s)	0
H3 (s)	0
C14 (s)	0
I129 (s)	0
OFP (s)	0
U233 (s)	0
U235 (s)	0
Cm243+4(s)	0
Np237 (s)	0
Sb125 (s)	0
TOTAL	0
TOTAL TRU	0
TOTAL Eu	0
TOTAL SOLIDS	0

TOTAL PRECIPITATE	0.0 t/d
TOTAL SOLIDS	0.0 t/d
TOTAL MASS	0.0 t/d
TOTAL VOLUME	0.0 m3/d
DENSITY	1.108 t/m3

STREAM 105 HLW VOC Off-Gas to HLW Vitrification Stack Gas

MASS:	t/d
Al	0.0
Ba	0.0
Ca	0.0
Cd	0.0
Cl	0.0
Cr	0.0
F	0.0
Fe	0.0
Hg	0.0
K	0.0
La	0.0
Ni	0.0
NO2	0.0
NO3	0.0
OH	0.0
Pb	0.0
PO4	0.0
SO4	0.0
TIC	0.0
TOC	0.0
U	0.0
Na	0.0
H2O	2.001
Cs	0.0
Sr	0.0
Tc	0.0
NH3	21.074E-6
TRU	0.0
Am	0.0
Pu	0.0
NO	22.891E-3
Si	0.0
B	0.0
SrCO3	0.0
MnO4-	0.0
Am(OH)3	0.0
O	0.0
O2	16.122
Mn	0.0
Pu(OH)4	0.0
P2O5	56.522E-9
SO2	4.591E-9
CO2	0.124
I2	4.593E-6
N2	57.014
Co	0.0
Eu	0.0
Zn	0.0
Mg	0.0
Zr	0.0
Li	0.0
NO2(g)	1.554E-3
CsIX	0.0
TcIX	0.0
Sugar	0.0
Co(OH)3	0.0
SO4IX	0.0
H+	0.0
(TcO4)-	22.342E-9
B2O3 (s)	0.0
MnO2 (s)	0.0
H2O (s)	0.0
ZnO (s)	0.0
Li2O (s)	0.0
TOC (s)	0.0
Na2O (s)	0.0
K2O (s)	0.0
Al2O3(s)	0.0
CaO (s)	0.0
Cr2O3(s)	0.0
Fe2O3(s)	0.0
NiO (s)	0.0
MgO (s)	0.0
SiO2 (s)	0.0
ZrO2 (s)	0.0
BaO (s)	0.0
Anion(s)	0.0
La2O3(s)	0.0
PbO2 (s)	0.0
UO3 (s)	0.0

ACTIVITY:	TBq/d
Cs137	36.997E-9
Sr90	0.0
Tc99	8.483E-6
Am241	0.0
Co60	0.0
Eu154	0.0
Eu155	0.0
Pu238	0.0
Pu239	0.0
Pu240	0.0
Pu241	0.0
H3	0.0
C14	0
I129	119.407E-9
OFP	0.0
U233	0.0
U235	0.0
Cm243+4	0
Np237	0.0
Sb125	0.0
Cs137 (s)	0
Sr90 (s)	0.0
Tc99 (s)	0
Am241 (s)	0
Co60 (s)	0
Eu154 (s)	0
Eu155 (s)	0
Pu238 (s)	0
Pu239 (s)	0
Pu240 (s)	0
Pu241 (s)	0
H3 (s)	0
C14 (s)	0
I129 (s)	0
OFP (s)	0
U233 (s)	0
U235 (s)	0
Cm243+4(s)	0
Np237 (s)	0
Sb125 (s)	0
TOTAL	8.640E-6
TOTAL TRU	0.0
TOTAL Eu	0.0
TOTAL SOLIDS	0.0

TOTAL PRECIPITATE	0.0	t/d
TOTAL SOLIDS	0.0	t/d
TOTAL MASS	75.284	t/d
TOTAL VOLUME	66.455E3	m3/d
DENSITY	1.133E-3	t/m3

Appendix B
Flowsheet Diagrams

Figure B-1. Pretreatment Flowsheet

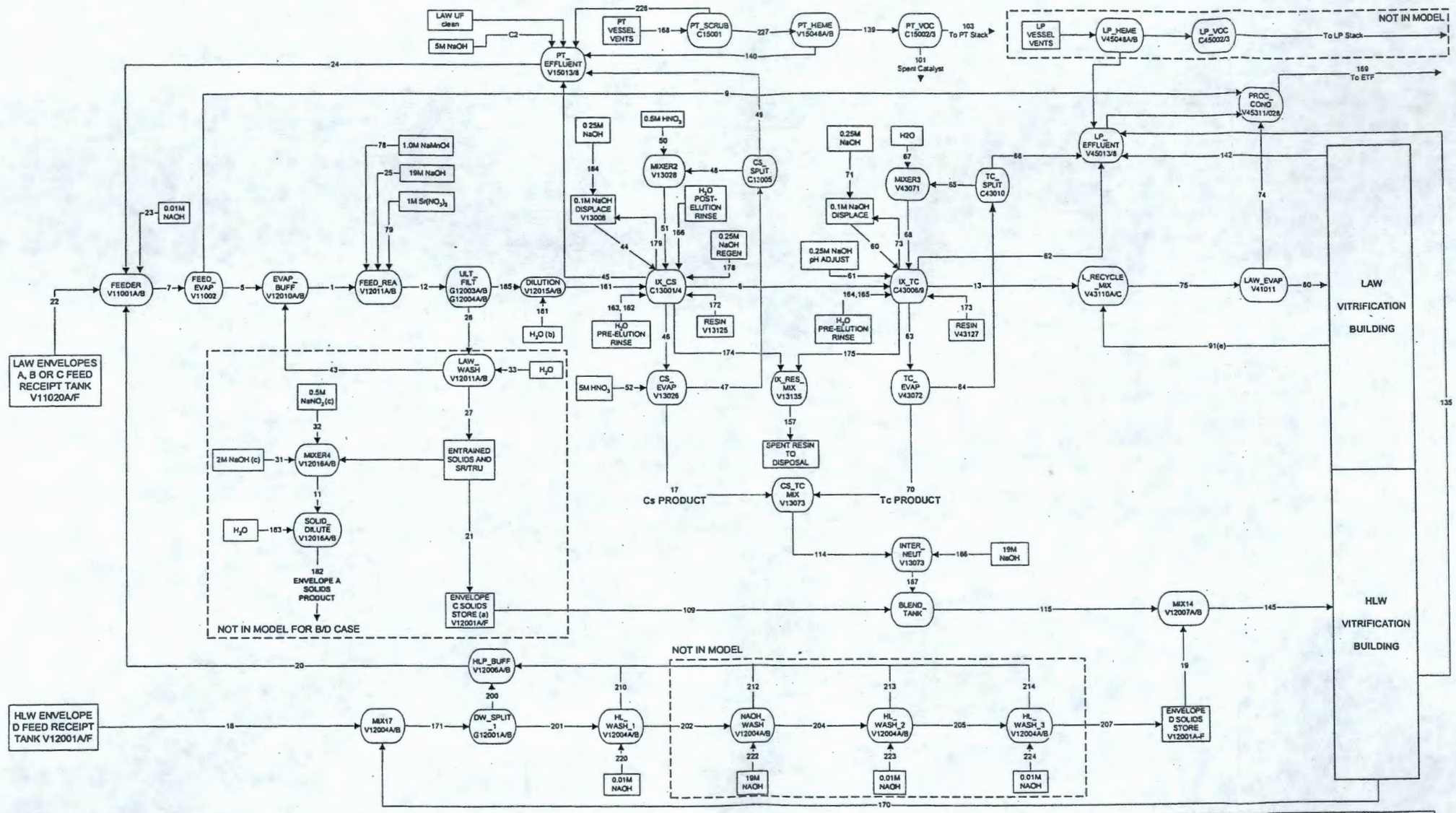

Notes

(a) These feed streams are included for flowsheeting purposes to allow the specification of the flow of the LAW intermediate products to the HLW melter in the Unenhanced case.
(b) Dilution for Envelope C only.
(c) NaOH and $NaNO_2$ may be required to be added to adjust the OH and NO_2 of the intermediate products to meet the DoE return pipeline specifications (envelope A only).
(d) The LAW Pretreatment Building includes Tc IX, LAW Melter Evaporator and Process Condensate Vessel
(e) Routings for active effluents from the LAW and HLW effluent systems are still under review.

RPP-WTP Pretreatment and LAW Pretreatment Building

Drawn By: V B Ashley
Date: 16 March 2000

Basis Document RPT-W375-TE00017

Figure B-2. Vitrification Flowsheet

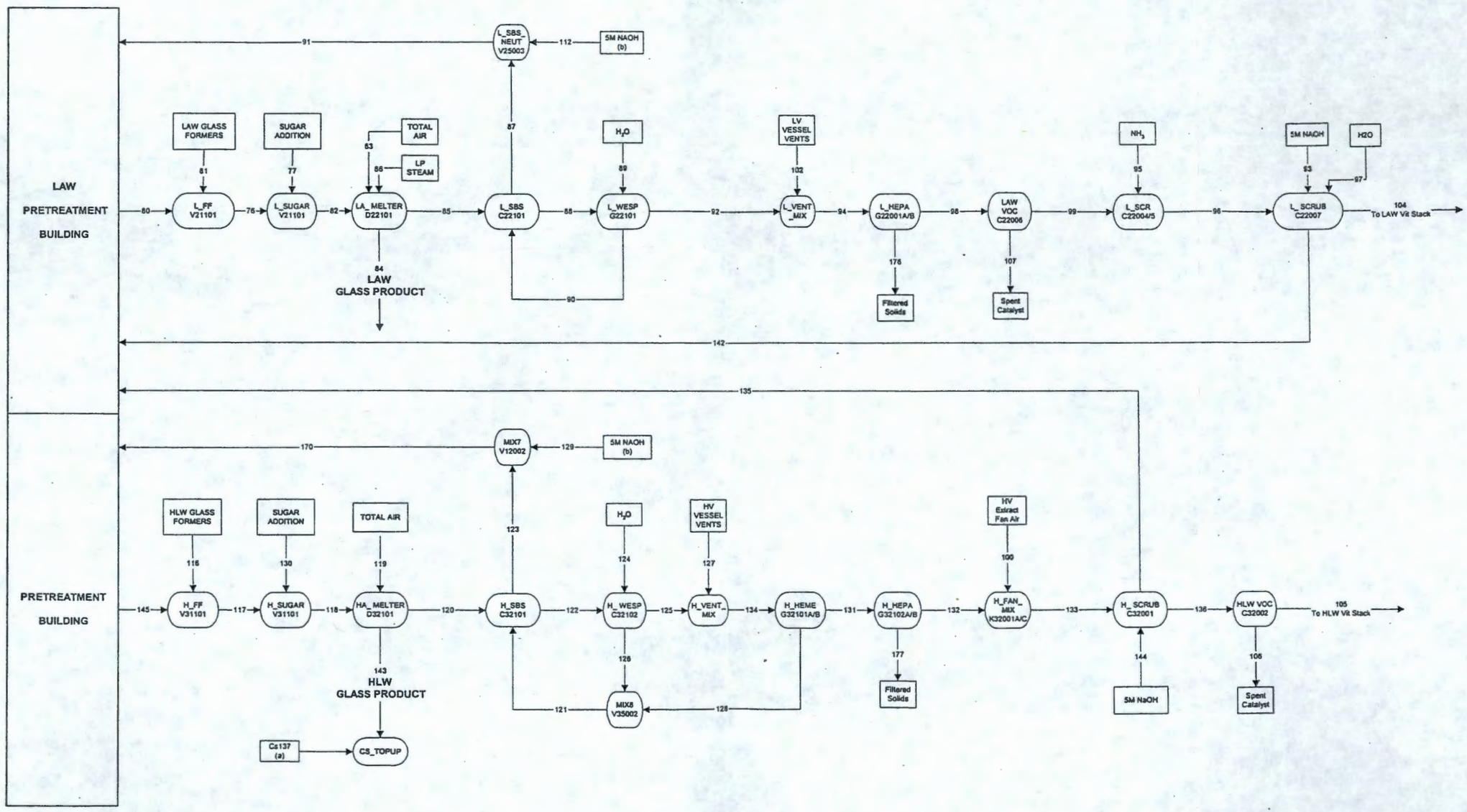

Notes
(a) Adds activity to achieve 1500 W/canister in the HLW glass
(b) NaOH addition set to zero in model.

RPP-WTP Vitrification Buildings

Drawn By: V B Ashley
Date: 16 March 2000

Basis Document RPT-W375-TE00017

Supplement 7

Supplement 7
Waste Compatibility and Structural Integrity of System Vessels and Piping

BNFL Inc.

Document title: **Waste Compatibility and Structural Integrity of System Vessels and Piping**

Department: Environmental Engineering

Contract number: DE-AC06-96RL13308

Author(s): J. Hedengren L. Levine P. Ohl

Principal Author Signature

Document Number: RPT-W375-EN00003, Rev. 1

Checked by: G. Normandin

Principal Checker Signature

Date of issue: 28 April 2000

Issue status: Approved

Approved by: K. Boomer

Approver's position: Technical Manager – Waste Chemistry

Approver's signature

BNFL Inc.
River Protection Project –
Waste Treatment Plant
3000 George Washington Way
Richland, WA 99352
United States of America
Tel: 509 371 3500
Fax: 509 371 3504

Circulation List

Purpose of issue: 1 For comment
2 For action
3 For information

Name	Location	No of copies	Remarks	Purpose of issue
K Boomer		1		3
G Duncan		1		3
J Saame		1		3
B Davies		1		3
J Isherwood (John)		1		3
J Isherwood (Jim)		1		3
M Page		1		3
G Normandin		1		3
C Corriveau		1		3
L Bostic		1		3
D Skeath		1		3
E Isern		1		3
R Tiwari		1		3

History sheet

Rev	Date	Reason for revision	Revised by
A	16 Aug 1999	Draft for Review	Hedengren/Levine
B	10 Feb 2000	Second Draft for Review	Ohl
C	6 March 2000	Final Draft for Review	Ohl
0	31 March 2000	Approved	Ohl
1	28 April 2000	Approved	Ohl

Contents

Item — Page Number

Acronyms and Abbreviations v
1. Introduction 1
1.1. Project Overview 1
1.2. Objective 1
2. Materials Selection 2
3. Predicting Corrosion 2
4. Previous Corrosion Cases 3
4.1. 242-A Evaporator 3
4.2. 204-AR Waste Unloading Facility: LD Blackburn 3
4.3. Savannah River Pilot Melter Testing 3
4.4. Corrosion Testing by Pacific Northwest National Laboratories 4
5. System Conditions Methodology 4
5.1. System Conditions That Influence Corrosion 4
5.2. Solution pH 4
5.3. Temperature 5
5.4. Halide Concentrations 5
5.5. Summary 6
6. Construction Materials 6
6.1. 304 and 304L Stainless Steels 6
6.2. 316 and 316L Stainless Steels 6
6.3. Hastelloy C-22 and C-276 7
6.4. Titanium Grade 2 and Grade 7 7
6.5. Gasket Materials 8
6.6. Process Cell Liners 8
7. Conclusions 8
References 9
Appendix A Corrosion of Austenitic Stainless Steels ..... A-i
Appendix B System Conditions Methodology ..... B-i

Acronyms and Abbreviations

DOE	Department of Energy
HLW	high-level waste
IGSCC	intergranular stress corrosion cracking
LAW	low-activity waste
PNNL	Pacific Northwest National Laboratory
RPP-WTP	River Protection Project – Waste Treatment Plant
SBS	submerged bed scrubber
SCC	stress corrosion cracking
TGSCC	transgranular stress corrosion cracking

1. Introduction

1.1. Project Overview

Radioactive waste has been accumulating on the Hanford Site in Washington State since 1944. Since that time approximately 55.5 million gallons of radioactive waste have been collected and temporarily stored in single and double-shell tanks (DST). Now there are a total of 177 underground tanks, including 149 older single-shell tanks (SST).

BNFL Inc. is currently designing a vitrification facility that will permanently immobilize the radioactive waste in large glass logs. The vitrification facility will provide a permanent solution for storage and handling the waste. Currently, the 10-year minimum operation of the facility is expected to treat 10 % of the Hanford tank waste by mass and 20 to 25 % by radioactivity.

1.2. Objective

BNFL Inc. is currently designing the vitrification facility for a useful life of 40 years. During this time the vessels, pipes, valves, and associated equipment must operate effectively and efficiently with no projected needs for replacement, and the facility must be designed to facilitate decontamination and decommissioning. The materials designed for use in process equipment are selected as primary nuclear service components to provide assurance against corrosion based failures, and reduce the life-cycle costs associated with decontamination and decommissioning of the plant.

The principal objective of this document is to determine the corrosion potential and protection requirements for the tank systems and ancillary equipment in accordance with the Dangerous Waste Permit Application (DWPA). This report does not specifically identify each piece of ancillary equipment individually.

Processing equipment described in this report include:

- Process tanks and vessels
- Storage tanks and vessels
- Process piping
- Process Cell Liners
- Offgas systems
- Miscellaneous process components such as gaskets and valves

Utilities equipment such as water, steam, diesel, and fire protection piping, tanks, and vessels are not included in this report. This equipment is discussed in the Balance of Facility System and Facility Description Reports.

The tanks, vessels and piping used in the vitrification plant must exhibit adequate material, design, structural strength, and radioactive waste compatibility for storage and treatment as primary nuclear service components (Ecology 1994).

2. Materials Selection

In Tables B-1 through B-3, Best Model for System Specifications, the recommended construction material is based on the temperature, pH, and free halide (F^-, Cl^-, Br^-, and I^-) concentration as well as future decontamination operations. The majority of the tanks and associated ancillary equipment has a high pH (above 12) and low temperatures (below 50 °C) and are compatible with 304L SS. The evaporator recirculation vessel, high-level waste (HLW) ultra-filtration feed vessel A/B, low-activity waste (LAW) melter feed preparation vessel, and cesium eluate receipt vessels are compatible with 316L SS because of a higher pitting and crevice corrosion resistance at elevated temperatures and pH. The LAW vitrification plant melter's submerged bed scrubber (SBS), tanks 1, 2, and 3, and the HLW offgas SBS will have a pH range that varies between 0.5 and 13.5, therefore, a super nickel alloy, Hastelloy C-22 is necessary.

The concentrated nitric acid and cerium mixture for dissolution of canister corrosion products (iron, nickel, and chromium oxides) in the canister decontamination system is also corrosive to iron-nickel-chromium alloys like 304L SS, 316L SS, and Hastelloy C-22, therefore, a high-purity titanium alloys will be required for these vessels.

The HLW and LAW streams will operate at a high pH. Exceptions to this will be the liquid effluents from the offgas system, and all the streams associated with cesium and technetium concentrates. For these streams 316L SS was chosen to provide greater insurance against pitting and crevice corrosion.

Ancillary equipment such as piping, valves, filters, seal loops, and process cell liners will be constructed of compatible materials similar to the major processing vessels that they support.

3. Predicting Corrosion

The three most indicative properties for predicting corrosion are chloride concentration, pH, and temperature. The following general rules apply to corrosion with respect to these properties:

- Molybdenum added to stainless steels generally diminishes chloride-related corrosion
- A lower pH (more acidic) generally causes higher corrosion rates
- A higher temperature generally causes higher corrosion rates. Under 50 °C , stress corrosion cracking is rarely observed (Perry, 1973). For example, the LAW feed evaporator is designed to operate at 50 °C which should reduce this type of corrosion.

These are general rules to be able to predict and prevent corrosion. However, the most effective means of predicting corrosion are to actually perform simulated operating conditions. These can be costly and take time for significant corrosion to be measured. Another alternative is to analyze corrosion studies that have been performed on existing or past systems that have similar materials and operating conditions as the River Protection Project-Waste Treatment Plant (RPP-WTP) design.

4. Previous Corrosion Cases

4.1. 242-A Evaporator

A corrosion evaluation was performed on the 242-A Evaporator located on the Hanford Site in 1993 to support *The 242-A Evaporator/Crystallizer Tank System Integrity Assessment Report* (Ohl, 1994). A follow-up corrosion evaluation was performed in 1998 to support the successive 1998 5 year integrity assessment of the same components (Jensen 1998). The evaporator system runs at high temperatures, pH's and chloride concentrations, which pose potential corrosion problems.

The 242-A Evaporator was constructed in 1977 and ran nearly continuously through 1989 when operations were halted for project B-534 upgrades, which brought the facility back on-line in 1994. The 242-A Evaporator has had a similar operating history as the planned RPP-WTP facility. The 242-A Evaporator corrosion evaluation supports the compatibility of 304L SS with the potentially corrosive environments of HLW and LAW.

4.2. 204-AR Waste Unloading Facility: LD Blackburn

Evaluation of the potential for corrosion of 304 stainless steel in waste solutions containing 0.01 to 0.03 M (355 to 1065 ppm) chloride ions in past shipments through the 204-AR Waste Unloading Facility did not cause detectable damage to facility piping. The important factors in minimizing effects of higher chloride solutions include the following (Blackburn 1991):

- Solution pH in the range of 7 to 14
- Solution temperatures below 50 °C
- Low levels of solution impurities known to aggravate localized corrosion

The results of a case study performed on 204-AR Waste Unloading Facility displays the pitting corrosion of 304 SS in chloride-containing waters.

Chloride Ion Content (ppm)	Temperature (C)	pH	Time (months)	Pitting Corrosion
1000	40	7	0.44	Initiated
250-5,000	24-60	7	6	None
5,000-10,000	Ambient	4	15.9	Mild
330	80	1.5	7.3	Severe
50	50	1.4	17.6	None
110 plus organic liquid	70	7.5	6.7	Mild

Although definitive conclusions can not be drawn from this limited data, a general trend can be seen; an increase in chloride ion content and temperature increases the potential for pitting corrosion, as does the decrease in pH.

4.3. Savannah River Pilot Melter Testing

In 1982 and 1983 Savannah River Waste Processing Facility had pilot-scale melter tests performed by Pacific Northwest National Laboratory (PNNL) (HWVP Technical Manual, 4.7-64). From these tests the following was concluded:

> Combinations of laboratory and field tests have shown that severe corrosion of gas-treatment equipment is generally related to the presence of acid gases and/or halides. Of all materials tested, generally only the highly alloyed nickel-based alloys and in some cases titanium alloys exhibit good corrosion resistance. In closed-loop systems, where plant process water is recycled, this recycling can lead to 10- to 35-fold increases in chemical concentrations in scrubber makeup water, for example, leading to extremely corrosive conditions in a scrubber. Lower nickel-based alloys and stainless steels proved unacceptable for this type of application due to excessive general corrosion, pitting, and crevice corrosion.

From these results it can be concluded that stainless steels are unacceptable for BNFL Inc.'s SBS. Hastelloy C-22 is the nickel-based alloy recommended under these conditions.

4.4. Corrosion Testing by Pacific Northwest National Laboratories

Pacific Northwest National Laboratory performed corrosion simulation tests with a solution formulated to simulate tank waste (PNNL 2000). Stainless steel 316L and Hastelloy C-22 were tested under conditions that modeled BNFL Inc.'s LAW feed evaporator in the pretreatment facility. Metal test coupons were placed at four locations: submerged in the agitated solution, partially submerged at the liquid-vapor interface, suspended in the vapor, and suspended in condensing vapor. The results showed that Hastelloy C-22 has superior corrosion resistance but that 316L SS performed adequate for use under evaporator conditions.

5. System Conditions Methodology

For the purpose of analyzing the waste compatibility, it is necessary to specify system conditions for each major vessel. To analyze the factors that influence corrosion, Tables B-1 through B-3, Best Model for System Specifications, has been compiled (see appendices). This table was compiled from the most current mass balance data sheets (Coleman 1998). It is important to note that the mass balance data sheets have not been finalized. However, the bulk chemistry associated with each waste feed envelope, and the necessary pretreatment and vitrification chemistries have been defined well enough for materials' selection purposes. Any major deviations to the process chemistry as defined in the mass balance data sheets will require a review of the materials selection and waste compatibility.

5.1. System Conditions That Influence Corrosion

The three most important factors that influence corrosion are the pH, temperature, and free halide (specifically chlorides and fluorides) concentration. Other important factors include complexing agents that bound free halides, periods of stagnation, and tank design to inhibit corrosion. To predict corrosion rates and make an appropriate material selection, the pH, temperature, and halide concentrations were calculated for each major vessel.

5.2. Solution pH

Solution pH levels reported in Tables B-1 through B-3, Best Model for System Specifications were taken from two different sources. The pH levels for the pretreatment plant were calculated from a mass balance on Envelope B and Envelope D feed and 30 Mt/day (Coleman 1998). In the mass balance datasheets a flow rate of free hydroxide ions (OH^-) and free hydrogen ions (H^+) are reported for each stream.

According to the mass balance (Coleman 1998), the hydroxides in the mass balance report include $Al(OH)_3$ and $Cr(OH)_3$ in the bound hydroxide form. These hydroxide molecules do not contribute to the free hydroxides of the solution so they are factored out in the datasheet calculations found at the end of each datasheet attachment.

The HLW and LAW streams will have a high pH. Exceptions to this will be the liquid effluents from the offgas system and all the streams associated with cesium and technetium concentrates.

The pH levels for the offgas system were taken from *HLW Offgas Mass and Heat Balance* (Rouse 1999) and *LAW Offgas Mass and Heat Balance* (Rouse 1999).

5.3. Temperature

Temperature values for the pretreatment facility were taken from BNFL Inc.'s datasheets as of 31 July 1999. Stainless steels are susceptible to stress corrosion cracking at temperatures greater than 65 °C and in the presence of chlorides (Anderson 1995). Accordingly, the majority of the vessels in the plant are designed to operate below a maximum temperature of 50 °C.

The processes that will require higher temperatures are the caustic wash vessels (V12004A/B), the LAW and HLW melters, and many offgas systems. Temperatures for the LAW and the HLW vitrification were taken from *HLW Offgas Mass and Heat Balance* (Rouse 1999) and *LAW Offgas Mass and Heat Balance* (Rouse 1999).

5.4. Halide Concentrations

The expected halide concentrations were calculated from contract maximums for total fluoride and chloride ions. The Department of Energy (DOE) contract (DOE 1998) lists the following contract maximums:

	Concentration (mol/mol Na)		
Component	Envelope A	Envelope B	Envelope C
Total Chloride	3.7E-2	8.9E-2	3.7E-2
Total Fluoride	9.1E-2	2.0E-1	9.1E-2

These contract maximums are taken from historical waste samples from the various waste feed envelope feed stocks. Although these contract maximums do not necessarily reflect actual concentrations, they are expected to be bounding concentrations. In addition to total chlorides and fluorides, there is no contract limit to the amount of iodide ion added to the Envelopes A, B, or C feed, and the sodium concentration can vary between 3 M and 10 M. It is important to note that for corrosion considerations, total halide concentrations are not nearly as important as free halide concentrations.

Concentrations for the chloride and fluoride ions will be the greatest in the Envelope B feed. Ion concentrations adjusted to contract maximum levels are reported in Table B-4, System Specifications Relevant to Corrosion (at contract maximum levels for halides). Contract maximum concentrations are extremely high and are not typical of actual waste to be processed by the vitrification facility.

To devise a more accurate estimate of halide concentrations, relative values for each major system were calculated based on the Envelope B and D feed streams. Next, actual waste data from the Best Basis Inventory (LMHC 1998) were analyzed in *Halide Calculations to Support Waste Compatibility Assessment* (Normandin 2000). Each tank listed was analyzed according to four different situations:

Undiluted Solubles represent the halide concentrations of the liquid phase of the listed tanks. No washing or dilution was assumed so these values represent concentrations that exist currently in the tanks.

Concentrated Solubles adjusted to10 M Na+ are the same liquid solutions that are dehydrated up to the contract maximum for sodium concentration. Tanks AN-103 and AW-101 were actually above the 10 M Na+ limit so halide concentrations for these tanks represent a dilution to 10 M Na+. Also, AW-103 concentrations are at 3 M Na+ (contract minimum) because the analyte content is too high for 10 M Na+ (contract maximum) to be possible.

Washed Solids assumes the solids are washed and the supernatant is fed to the LAW pretreatment feed vessel (V11001A/B). In this case the wash factors for all the halides were assumed to be 100 % to account for a worst case condition and for simplicity. Also, because of the relatively small amounts of other solids, all the solids were assumed to wash into solution.

Concentrated Washed Solids adjusted to10 M Na+ are the same washed solutions that are dehydrated up to the contract maximum for sodium concentration. Tanks AN-103, AW-101, and SY-101 were actually above the 10 M Na+ limit so halide concentrations for these tanks represent a dilution to 10 M Na+.

5.5. Summary

Tables B-1 through B-3, Best Model for System Specifications is a summary of all the calculations. The temperature values are reported as the worst case condition, the pH is for the Envelope B and D plant feeds, and the halide concentrations are from *Halide Calculations to Support Waste Compatibility Assessment* (Normandin 2000) and report the maximum halide concentrations for a solution adjusted to 10 Molar sodium.

6. Construction Materials

6.1. 304 and 304L Stainless Steels

Types 304 and 304L stainless steels have excellent resistance in a variety of corrosive environments. This type of steel is traditionally used in many nuclear facility operations because of an excellent thermal stability and high tensile strength. Types 304 and 304L are relatively inexpensive stainless steels, easily welded, and have excellent resistance to oxidation up to 815 °C when used in intermittent service and up to 900 °C when used in continuous service (J&L Specialty Steel, Inc. 1999a). Type 304L is essentially the same as 304 except that it has a lower carbon content. This reduces carbide precipitation that can be associated with welding and, therefore, decreases possible intergranular corrosion at the weld. The following are the compositions of 304 and 304L (UNS S30400 and S30403):

Compositions (%)	Carbon	Manganese	Silicon	Chromium	Nickel	Sulfur	Phosphorous
Type 304	0.08 max	2.00 max	1.00 max	18.00-20.00	8.00-10.50	0.03 max	0.045 max
Type 304L	0.03 max	2.00 max	1.00 max	18.00-20.00	8.00-12.00	0.03 max	0.045 max

6.2. 316 and 316L Stainless Steels

Types 316 and 316L stainless steels are essentially the same as type 304 and 304L respectively except for the added Molybdenum to aid in corrosion resistance, especially against chlorides. This type of steel has excellent thermal properties, is easily welded, and is less susceptible to pitting attack in high chloride concentrations (J&L Specialty Steel, Inc. 1999b).

BNFL Inc.'s vitrification plant is designed to treat waste from a variety of tanks, each having individual corrosive properties. In addition, within the plant there are a variety of steady state temperatures and pH levels. Type 316 and 316L are generally more corrosion resistant than types 304 and 304L under the varying conditions in the plant. However, one disadvantage to using type 316 and 316L is that they are approximately 20 % more expensive than types 304 and 304L. These stainless steels have the following compositions (UNS S31600 and S31603):

Compositions (%)	Carbon	Manganese	Silicon	Chromium	Nickel	Moly	Sulfur	Phosphorous
Type 316	0.08 max	2.00 max	1.00 max	16.00-18.00	10.00-14.00	2.00-3.00	0.03 max	0.045 max
Type 316L	0.03 max	2.00 max	1.00 max	16.00-18.00	10.00-14.00	2.00-3.00	0.03 max	0.045 max

6.3. Hastelloy C-22 and C-276

Hastelloy C is the alloy of choice for high temperature, high chloride concentrations, and low pH (more acidic) conditions. To illustrate the superior corrosion resistance a test was performed containing 24,300 ppm chlorides and a pH of two.

Alloy	Critical Pitting Temperature	Critical Crevice-Corrosion Temperature
HASTELLOY C-22 alloy	>136 °C	100 °C (boiling)
Type 316 Stainless Steel	5 °C	<-19 °C

Hastelloy C-22 demonstrated superior corrosion resistance for both pitting and crevice corrosion. In another corrosion study Hastelloy C-22 showed a corrosion rate of less than 10 mpy (mils per year) for a boiling 1.5 % HCl solution and less than 2 mpy for 2.5 % HCl at 194F (Haynes International 1999). Based on the corrosion studies, Hastelloy C-22 is recommended in applications where there are high temperatures, high chloride concentrations, and low pH conditions. Hastelloy C-22 is a nickel based alloy and has the following composition (UNS N26022):

HASTELLOY C-22	**Nickel**	**Carbon**	**Chromium**	**Molybdenum**	**Tungsten**	**Sulfur**
Compositions (%)	Balance (51 min)	0.02 max	22.0-22.5	12.5-14.5	2.5-3.5	0.025 max
	Manganese	Phosphorous	Vanadium	Iron	Silicon	
	1.0 max	0.025 max	0.35 max	2.0-6.0	0.8 max	

By comparison, Hastelloy C-276 has the following composition (UNS N10276):

HASTELLOY C-276	**Nickel**	**Carbon**	**Chromium**	**Molybdenum**	**Tungsten**	**Sulfur**
Compositions (%)	Balance (~50)	0.02 max	14.5-16.5	15.0-17.0	3.0-4.5	0.025 max
	Manganese	Phosphorous	Vanadium	Iron	Silicon	Cobalt
	1.0 max	0.025 max	0.35 max	4.0-7.0	0.8 max	2.5 max

6.4. Titanium Grade 2 and Grade 7

Titanium alloys offer excellent corrosion resistance combined with excellent strength-to-weight ratios. For applications that may be corrosive to austenetic stainless steels (like 304 and 316) and high nickel alloys (like the Hastelloy series), and high temperature or pressure application, titanium offers attractive solutions.

Titanium Grades 2 and 7 are high-purity titanium alloys. These high-purity alloys offer superior corrosion resistance to many of the other titanium alloys; however, fabrication must be monitoring closely to avoid contamination impurities at welded connections.

Titanium Grades 2 and 7 have the following chemical compositions (UNS R50400 and R52400):

Compositions (%)	Titanium	Carbon	Nitrogen	Hafnium	Oxygen	Iron	Palladium
Grade 2	98.9 min	0.1 max	0.03 max	0.015 max	0.25 max	0.3 max	-
Grade 7	99.0 min	0.1 max	0.03 max	0.015 max	0.25 max	0.3 max	0.12-0.25

6.5. Gasket Materials

The pretreatment, HLW, and LAW piping systems have specified graphite gaskets for the few places in the plant with flanged connections. Graphite gaskets offer excellent chemical and thermal resistance and are not subject to radiation embrittlement like many elastomer gaskets. However, literature data suggests that carbon based materials such as graphite, significantly degrade in concentrated nitric acid (>30 % by wt) at even modest temperatures (20 to 60 °C) (Corsur 1981 and Cole-Parmer 2000). Portions of the facility that require flanged connections and are expected to see concentrated nitric acid, will select an alternative gasket material such as EPDM, neoprene, or silicone. In the event of high radiation areas (> 10^6 rad lifetime dose) in combination with concentrated nitric acid, metallic gaskets may be necessary.

6.6. Process Cell Liners

Type 304L SS has been selected for secondary containment process cell liners throughout the plant. Although some process cells require higher alloyed materials like Type 316L SS, Hastelloy high-nickel alloys, or even titanium, Type 304L SS offers sufficient corrosion protection for the durations and temperatures associated with secondary containment service. In addition to the 304L SS process cell liners, LAW pretreatment process condensate tanks (V45028) A, B, and C will be contained in water resistant concrete curbs with appropriate water-stops at the joints. Water resistant concrete is appropriate secondary containment for solutions with neutral pH at ambient temperatures.

7. Conclusions

Based on the case histories included in section 4 and the analyses included in sections 5 and 6, corrosion resistant materials such as 304L SS, 316L SS, Hastelloy high-nickel alloys, and high purity titanium alloys are appropriate materials for pretreatment and vitrification of LAW and HLW. Specific conclusions include:

1 All process equipment in the pretreatment, LAW, and HLW process buildings should be constructed of corrosion resistant materials to provide assurance against corrosion based failures and minimize the life-cycle costs associated with decontamination and decommissioning of the plant.

2 The construction materials selected will be compatible with each other with minimal potential differences between passive austenetic stainless steels, and nickel or titanium alloys. There are quality assurance issues associated with the use of similar but different construction materials throughout the plant. By appearance, type 304L SS, 316L SS, and Hastelloy high-nickel alloys look alike despite careful markings and material segregation. For this reason, common components such as piping for all systems should be specified as the same material, (for example, all 304L or 316L SS) where possible.

3 Type 304L SS is appropriate for process tanks and vessels in the pretreatment, LAW, and HLW process buildings that operate at lower temperatures (<50 °C) and alkaline conditions with minimal fluoride and chloride concentrations.

4 Type 304L SS is appropriate for ancillary equipment such as piping, valves, filters, and seal loops in the pretreatment, LAW, and HLW process buildings. For this equipment, exposure durations, concentrations and temperatures are less severe than many of the process tanks and vessels that require higher alloyed materials.

5 Type 304L SS is also appropriate for process cell liners that may be required for secondary containment in the event of a process upset. In the event of a process upset, temperatures would be expected to be maintained at less than 50 °C, therefore, Type 304L SS offers appropriate corrosion protection.

6 Type 316L SS is appropriate for process equipment (tanks, vessels, piping, and off-gas systems) in the pretreatment, LAW, and HLW process buildings that will operate at somewhat elevated temperatures (>50 °C) and alkaline conditions with potentially high fluoride and chloride levels (100 to 1000 ppm).

7 A high-nickel alloy like the Hastelloy series is necessary for the process equipment in the LAW and HLW process buildings that will operate at elevated temperatures (>50 °C) and a range of pH from very acidic (0.5) to very basic (13.5) with potentially very high fluoride and chloride levels (>1,000 ppm). These vessels will include the LAW vitrification plant melter SBS, tanks 1, 2, and 3 and the HLW offgas submerged bed scrubber.

8 High-purity titanium alloys like Ti-2 or Ti-7 have been proposed for the canister decontamination system (vessels V35001, 35002, and 35003). The concentrated nitric acid and cerium mixture for dissolution of canister corrosion products (iron, nickel, and chromium oxides) is also corrosive to iron-nickel-chromium alloys like 304L SS, 316L SS, and Hastelloy C-22.

9 Flexible graphite gaskets will be specifically manufactured for use in high temperature and high pressure applications. The added benefit of resistance to radiation damage will make graphite an appropriate selection for most pretreatment, HLW, and LAW applications. However, flexible graphite gaskets do not perform well in areas of concentrated (>30 % by wt) nitric acid. Portions of the facility that require flanged connections and are expected to see concentrated nitric acid, will select an alternative gasket material such as EPDM, neoprene, or silicone. In the event of high radiation areas (> 10^6 rad lifetime dose) in combination with concentrated nitric acid, metallic gaskets may be necessary.

References

Anderson DB and Craig BD. 1995. *Handbook of Corrosion Data,* Second Edition. ASM International, Materials Park, Ohio, USA.

Blackburn LD. 1991. *Evaluation of 204-AR Chloride Limit,* Internal Memo. Westinghouse Hanford Company, Hanford, Washington, USA.

Callister WD. 1997. *Material Science and Engineering, An Introduction*, Fourth Edition. John Wiley & Sons, Inc., New York, New York, USA.

Coleman MJ, and Richards VB. 1998. *TWRS Mass & Activity Balance Envelopes B/D*, Base Case, Richland, Washington.

Ecology. 1994. *Guidance for Assessing and Certifying Tank Systems that Store and Treat Dangerous Waste*, 94-114. Washington State Department of Ecology, Olympia, Washington, USA.

Haynes International. 1999. *Resistance to Localized Attack,* Internet URL http://www.haynesintl.com/C22site/H2019LA, accessed 22 July 1999.

InterCorr International, Inc. 1999. *Stress Corrosion Cracking of Stainless Steel,* Internet URL http://www.clihouston.com/sscorrosion.htm, accessed 22 July 1999.

J&L Specialty Steel, Inc. 1999a. *Types 304 and 304L Stainless Steels,* Internet URL http://www.jlspecialty.com/data/304.htm, 14 July 1999.

J&L Specialty Steel, Inc. 1999b. *Types 316 and 316L Stainless Steels,* Internet URL http://www.jlspecialty.com/data/316.htm, 14 July 1999.

Korb LJ, and Olson DL. 1987. *ASM Metals Handbook*, Ninth Edition, Vol. 13, Corrosion. ASM International, Metals Park, Ohio, USA.

LMHC. 1998. *Best Basis Inventory/TWRS Planning Baseline as of 10/1/98, Tank Characterization Database,* Internet at http://twins.pnl.gov:8001/. Lockheed Martin Hanford Corporation, Richland, Washington, USA.

Ohl PC. 1994. *The 242-A Evaporator/Crystallizer Tank System Integrity Assessment Report.* Westinghouse Hanford Company, Richland, Washington, USA.

Ohl PC. 1990. *Technical Bases for Cl^- and pH Limits for Liquid Waste Tank Cars*, MA:PCO:90/01.

Perry HP and Chilton HC. 1973. *Chemical Engineers' Handbook,* Fifth Edition. McGraw Hill Book Company, New York, New York, USA.

Rouse J. 1999. *LAW Offgas Mass and Heat Balance,* CALC-W375LV-PR00029, Revision 0, July 1999. BNFL Inc., Richland, Washington, USA.

Rouse J. 1999. *HLW Offgas Mass and Heat Balance,* CALC-W375HV-PR00014, Revision 0, July 1999. BNFL Inc., Richland, Washington, USA.

Smith JM, Van Ness HC, and Abbott MM. 1996. *Introduction to Chemical Engineering Thermodynamics*, Fifth Edition. The McGraw Hill Companies, Inc., New York, New York, USA.

DOE. 1998. *TWRS Privatization Contract Between DOE Richland Operations Office and BNFL, Inc.*, DE -AC06-96RL13308, August 1998. US Department of Energy, Washington D.C., USA.

Jensen CE. 1998. *1998 Interim 242-A Evaporator Tank System Integrity Assessment Report*, HNF-2905, Revision 0, June 1998. Fluor Daniel Hanford, Inc., Richland, Washington, USA.

PNNL. 2000. *Corrosion Test of 316L and Hastelloy® C-22 in Simulated Tank Waste Solutions,* Danielson M, and Pitman S, PNWD-3015, BNFL-RPT-019, Revision 0, February 2000. Pacific Northwest National Laboratory, Richland, Washington, USA.

Cole-Parmer. 2000. *Chemical Compatibilities*, http://www.coleparmer.com/techinfo/chemcomp.

Corsur. 1981. *Corrosion Data Survey – Nonmetals Section*. National Association of Corrosion Engineers, Houston, Texas, USA.

Normandin G. 2000. *Halide Calculations to Support Waste Compatibility Assessment*, CALC-W375-PR00002, Revision 0, March 2000. BNFL, Inc., Richland, Washington.

Appendix A
Corrosion of Austenitic Stainless Steels

A.1. Corrosion of Austenitic Stainless Steels

Corrosion is the deterioration of a metal surface as a result of chemical reactions between a metal or metal alloy and its environment. It is important to consider characteristics of the system in the selection of construction materials. (Perry 1973, 23-2) Austenitic stainless steels are high corrosion resistant materials that the tanks can be made from and used in the vitrification facility.

There are many different types of corrosion but all are defined as the deteriorative loss of a metal as a result of dissolution environmental reactions. Austenitic stainless steels, in general, are very corrosion resistant. In oxygenated solutions a thin chromium oxide film forms on the exposed surface when oxidizing agents are present. However, the chloride ion destroys that protective film and allows direct attack on the unprotected surface.

A.1.1. Pitting

Pitting is a type of corrosion that attacks at the stainless steel surface where chloride concentrations are allowed to build up and where oxygen levels are depleted. A scratch on the metal surface or in stagnant pockets can initiate it. Because chloride concentrations can build up at these places, a small pit can begin to creep downward. A pit can suddenly begin or passivate for a variety of reasons. It is believed that pitting is a result of a concentration gradient of chloride and a lower pH (more acidic) that destroys the stainless steel protective chromium oxide. The corrosion will usually proceed downward because gravity causes a higher concentration at the bottom of the pit. Areas where pitting will occur are very difficult to predict or detect and can often result in sudden failure of a pipe or vessel.

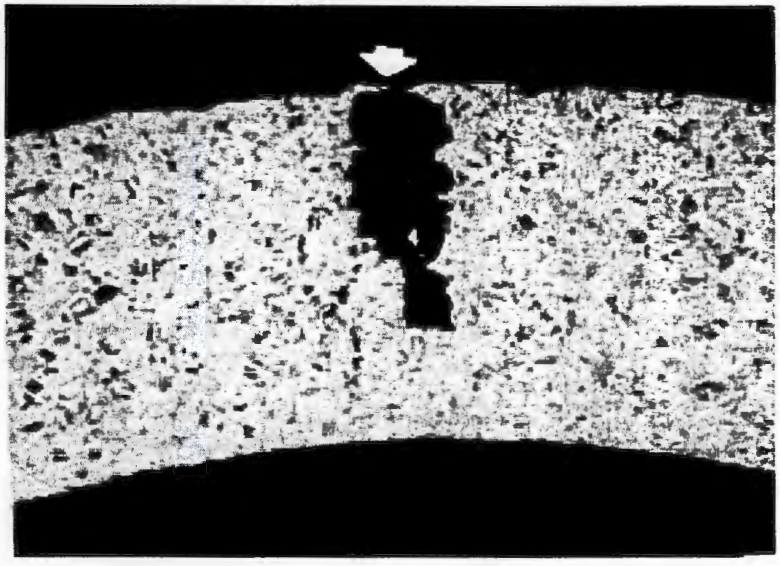

The above picture is an example of pitting in a cross section of a stainless steel pipe. It is observed that pitting is a very localized corrosion and tends to attack the metal surface at random. Also, pitting is often difficult to detect from a visual inspection of the surface. As can be seen above, the surface has a very small opening that hides a larger pocket.

A.1.2. Stress Corrosion Cracking

Stress corrosion cracking (SCC) is another major concern for austenitic stainless steels. SCC is a factor of internal residual and external applied stress, environmental chemicals and temperatures, and

engineering design (discussed in 2.1.4). Cracking occurs in areas of high internal residual or external applied stresses. Internal residual stresses are a result of unrelieved cold working created during fabrication and unequal cooling rates from high temperatures. External applied stresses can result from filling a tank or any other load put on the metal. However, generally the stresses must approach the yield strength to be susceptible to SCC (Perry 1973).

There are several different environmental parameters that influence the crack growth. These include but are not limited to temperature, pressure, solute species, solute concentration, pH, electrochemical potential, solution viscosity, and stirring or mixing. Alterations of these parameters can accelerate or reduce crack propagation. (Korb 1987) The three most important factors in SCC for stainless steels are concentration of chloride, temperature, and pH. A study of Cl^- concentration, pH, and temperature limits adequate for corrosion resistance was performed by Westinghouse Hanford Company. The study showed that the Cl^- limit is less than 335 ppm, operating temperatures range from 25-65 °C, and the pH should range between 7 and 14 (Ohl 1990). SCC in stainless steels generally does not occur when the temperature is below 50 °C and there is a high range of pH.

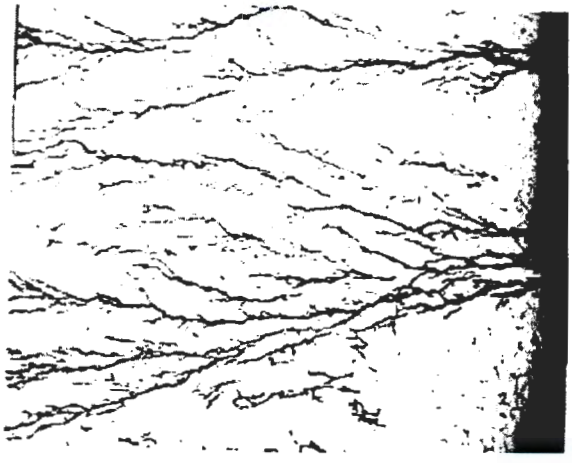

The above picture is an example of Transgranular Stress Corrosion Cracking (TGSCC) and shows the cracking along grain boundaries. TGSCC is observed most in austenetic steel. Alloying effects on slip planarity are a key metallurgical factor in TGSCC. Planar slip occurs in alloys with low stacking fault energy, alloys containing ordered phases, or short/long range ordering. In high-chloride environments, preferential corrosion occurs along the dislocated density plane created by planar slip (Korb 1987). When improperly heated, austenitic steels are susceptible to Intergranular Stress Corrosion Cracking (IGSCC) because of the precipitation of intergranular compounds. The cracking can lead to a weakening of the metal and can result in a failure. Another form of SCC for stainless steels is caustic embrittlement. This can occur in concentrated hot caustic solutions. Generally, stainless steel in a solution above 50 °C and a concentration above 30 % is susceptible (Perry 1973). The area of greatest concern for caustic embrittlement is around non-stress relieved welds.

A.1.3. Crevice Corrosion

Crevice corrosion is found in areas where two plates of similar or dissimilar metals are joined together. Crevices can be formed in threads of a pipe connection, in an unsealed weld, or any type of lip in the metal. This can result from a deficiency of oxygen, acidity changes, buildup of ions, or depletion of an inhibitor in the crevice (Perry 1973). Like pitting, the crevice generally contains higher concentrations of chlorides and a lower pH (more acidic). This differential in concentration will eat away at the metal until

failure occurs. Alloys in the stainless steel group are more prone to crevice corrosion than materials that exhibit more active behavior (Korb 1978).

A good engineering design is fundamental to minimizing corrosion. Design and assembly can affect localized corrosion by creating crevices and traps where corrosive liquids can accumulate. A poor design of seals and gaskets can create unwanted crevice sights; it might be necessary to support continuous welding to prevent the formation of traps and crevices. Storage containers and vessels should allow for complete drainage so that corrosive species accumulate at the bottom. Structural members should be designed to avoid the retention of liquids; L-shaped sections should be used with the open side down and exposed seams should be avoided. Drain valves should be designed with sloping bottoms to avoid pitting at the valve base (Korb 1978). To minimize stress concentrations, corners should be given generous radii, welds should be continuous, and sharp profiles can be avoided by alternating fastening systems (Korb 1978).

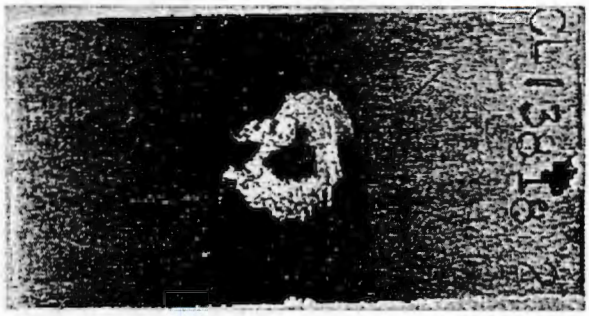

The above picture is an example of crevice corrosion. The center part that is corroded was in contact with a non-metal block that was put into place to form the crevice. On the right corner there is evidence of corrosion where a rubber band held the two samples together.

A.1.4. Erosion-Corrosion

Erosion-corrosion is a potential concern in the areas of the plant where abrasive solids, such as silica, will be blended. This mixing can destroy the chromium oxide protective layer and result in a uniform thinning of the metal surface. Since stainless steel has a high chromium content, they are very resistant to oxidation. Important factors to consider when selecting stainless steel for high temperature services is the stability of composition and microstructure of the grade upon thermal exposure and the adherence of the oxide scale upon thermal cycling. It is also necessary to be aware of the possibility of sulfidation attack due to the high nickel content in austenitic grades (Korb 1987). Harder materials, changes in velocity or environment, and addition of inhibitors are methods used to prevent erosion attack (Perry 1973).

A.1.5. Microbiologically Induced Corrosion

Microbiologically induced corrosion is a potential concern for untreated freshwater which may contain microorganisms. Especially during periods of stagnation, these microorganisms can multiply rapidly and form a film on the metal surface. A colony of microorganisms does not digest the metal directly but can potentially create an area of unbalanced concentrations for chlorides, oxygen, and a pH different from that of the solution. These factors tend to accelerate localized corrosion and lead to premature failure.

Systems in BNFL Inc.'s pretreatment and vitrification facilities utilize cooling water from the Columbia River to be used in heat exchangers. Therefore, there is a potential concern for these systems if the water supply is not treated properly to prevent this type of corrosion. Water treatment can include chlorination,

caustic adjustment, and continuous additions of Polyacrylate dispersant and nonoxidizing biocides (Korb 1987).

Also, as part of cold-testing operations water will be used as a feed simulant to work out the bugs in the plant before a cold waste simulant is used. Startup testing can be especially dangerous because of long periods of stagnation between test runs or between cold and hot startup. The ASM Metals Handbook on Corrosion (Korb 1987) gives the following recommended procedure during hydrotesting:

> First, demineralized water or high-purity steam condensate is used for the test water. The equipment should be drained and dried as soon as possible after testing. Second, if a natural freshwater must be used, it should be filtered and chlorinated, and the equipment should be blown or mopped dry within 3 to 5 days after testing.

In addition, during any extended plant downtime all freshwater systems should be drained and dried to inhibit the spread of microorganisms in pipes and vessels. By treating freshwater supplies and avoiding periods of stagnation, microbiologically induced corrosion should not affect the pipes and vessels of the vitrification plant.

A.2. Radionuclide Decontamination

Radionuclides can build up on surface of the metal where corrosion has taken place. This build-up is the most important factor in decontamination of the metal surface after plant deactivation. Generally, the areas of highest radionuclide contamination are expected to be in the areas where the corrosion rates are the highest. Therefore, controlling corrosion will also control the amount of radionuclide contamination and facilitate decommissioning of the vitrification plant.

Appendix B
System Conditions Methodology

Table B-1. Best Model for System Specifications (Pretreatment)

Vessel Number	Description	Temp (deg C)	pH	Cl^- (ppm)	I-129 (ppm)	F^- (ppm)	Recommended Construction Material	Relative Cost
V11001A	LAW FEED EVAPORATOR FEED TANK A	45	13.236	11,001.109	3.431	20,434.244	304LSS	1.1
V11001B	LAW FEED EVAPORATOR FEED TANK B	45	13.236	11,001.109	3.431	20,434.244	304LSS	1.1
V11002	EVAPORATOR RECIRCULATION VESSEL	50	13.946	49,151.092	15.329	91,296.744	304LSS	1.1
E11001	LAW FEED EVAPORATOR REBOILER	52	13.946	49,151.092	15.329	91,296.744	304LSS	1.1
E11002	LAW FEED EVAPORATOR PRIMARY CONDENSER	50	7.320	0.000	0.000	0.000	304LSS	1.1
V11005	LAW FEED EVAPORATOR PROCESS CONDENSATE POT	56	12.478	57.135	4.395	102.300	304LSS	1.1
V12010	EVAPORATOR CONCENTRATE BUFFER	50	13.946	49,151.092	15.329	91,296.744	304LSS	1.1
V12011A	ULTRAFILTRATION FEED VESSEL A	50	13.946	49,151.092	15.329	91,296.744	304LSS	1.1
V12011B	ULTRAFILTRATION FEED VESSEL B	50	13.946	49,151.092	15.329	91,296.744	304LSS	1.1
G12003A	ULTRAFILTER	25	13.950	49,506.108	15.442	91,968.239	304LSS	1.1
G12003B	ULTRAFILTER	25	13.950	49,506.108	15.442	91,968.239	304LSS	1.1
G12004A	ULTRAFILTER	25	13.950	49,506.108	15.442	91,968.239	304LSS	1.1
G12004B	ULTRAFILTER	25	13.950	49,506.108	15.442	91,968.239	304LSS	1.1
V12015A	PERMEATE HOLD VESSEL A	25	13.950	49,506.108	15.442	91,968.239	304LSS	1.1
V12015B	PERMEATE HOLD VESSEL B	25	13.950	49,506.108	15.442	91,968.239	304LSS	1.1
V12016A	ENTRAINED SOLIDS HOLD VESSEL A	51	13.060	6,556.361	2.045	12,179.088	304LSS	1.1
V12016B	ENTRAINED SOLIDS HOLD VESSEL B	51	13.060	6,556.361	2.045	12,179.088	304LSS	1.1
V13006	CAUSTIC REGENERATION TANK	50	12.000	42,897.801	13.380	79,689.217	304LSS	1.1
V13001	LAW FEED TANK	50	12.000	42,897.801	13.380	79,689.217	304LSS	1.1
V13007	CAUSTIC RINSE TANK	50	12.000	42,897.801	13.380	79,689.217	304LSS	1.1
V13008	CAUSTIC RINSE COLLECTION TANK	50	12.000	42,897.801	13.380	79,689.217	304LSS	1.1
V13004	TREATED LAW COLLECTION TANK	50	12.000	42,897.801	13.380	79,689.217	304LSS	1.1
C13001	Cs ION EXCHANGE COLUMN	50	cycles between 12 and 0.3	42,897.801	13.380	79,689.217	316LSS	1.4
C13002	Cs ION EXCHANGE COLUMN	50	cycles between 12 and 0.3	42,897.801	13.380	79,689.217	316LSS	1.4

Table B-1. Best Model for System Specifications (Pretreatment)

Vessel Number	Description	Temp (deg C)	pH	Cl^- (ppm)	I-129 (ppm)	F^- (ppm)	Recommended Construction Material	Relative Cost
CI3003	Cs ION EXCHANGE COLUMN	50	cycles between 12 and 0.3	42,897.801	13.380	79,689.217	316LSS	1.4
C13004	Cs ION EXCHANGE COLUMN	50	cycles between 12 and 0.3	42,897.801	13.380	79,689.217	316LSS	1.4
V13055	CAUSTIC TANK	50	12.000	42,897.801	13.380	79,689.217	304LSS	1.1
V13056	CAUSTIC RINSE COLLECTION TANK	50	12.000	42,897.801	13.380	79,689.217	304LSS	1.1
C13006	Tc ION EXCHANGE COLUMN	50	cycles between 12 and 0.3	42,897.801	13.380	79,689.217	316LSS	1.4
C13007	Tc ION EXCHANGE COLUMN	50	cycles between 12 and 0.3	42,897.801	13.380	79,689.217	316LSS	1.4
C13008	Tc ION EXCHANGE COLUMN	50	cycles between 12 and 0.3	42,897.801	13.380	79,689.217	316LSS	1.4
C13009	Tc ION EXCHANGE COLUMN	50	cycles between 12 and 0.3	42,897.801	13.380	79,689.217	316LSS	1.4
V13108	SULPHATE REMOVAL FEED BUFFER	50	12.000	42,897.801	13.380	79,689.217	304LSS	1.1
C13011	SULPHATE ION EXCHANGE COLUMN	50	cycles between 12 and 0.3	42,897.801	13.380	79,689.217	304LSS	1.1

Table B-1. Best Model for System Specifications (Pretreatment)

Vessel Number	Description	Temp (deg C)	pH	Cl^- (ppm)	I-129 (ppm)	F^- (ppm)	Recommended Construction Material	Relative Cost
C13012	SULPHATE ION EXCHANGE COLUMN	50	cycles between 12 and 0.3	42,897.801	13.380	79,689.217	304LSS	1.1
V13109	ELUANT PRODUCT AND NEUTRALISATION VESSEL	50	7.000	0.000	0.000	0.000	316LSS	1.4
V13110A	TREATED LAW COLLECTION VESSEL A	50	13.148	29,623.550	4.665	55,025.230	304LSS	1.1
V13110B	TREATED LAW COLLECTION VESSEL B	50	13.148	29,623.550	4.665	55,025.230	304LSS	1.1
V13110C	TREATED LAW COLLECTION VESSEL C	50	13.148	29,623.550	4.665	55,025.230	304LSS	1.1
E11011	EVAPORATOR REBOILER	50	13.608	78,190.641	12.313	145,237.759	304LSS	1.1
V11011	EVAPORATOR VESSEL	50	13.608	78,190.641	12.313	145,237.759	304LSS	1.1
V11012	LAW CONCENTRATE HOLD VESSEL	50	13.608	78,190.641	12.313	145,237.759	304LSS	1.1
E11012	PRIMARY CONDENSER	50	7.000	0.000	0.000	0.000	304LSS	1.1
V11013	PROCESS CONDENSATE HOLD VESSEL	50	7.000	0.000	0.000	0.000	304LSS	1.1
V13024A	CESIUM ELUATE RECEIPT VESSEL A	50	3.000	0.000	0.000	0.000	316LSS	1.4
V13024B	CESIUM ELUATE RECEIPT VESSEL B	50	3.000	0.000	0.000	0.000	316LSS	1.4
V13025	EVAPORATOR CONSTANT VOLUME FEEDER	50	3.000	0.000	0.000	0.000	316LSS	1.4
V13028	RECOVERED ACID TANK	50	2.510	0.000	0.000	0.000	316LSS	1.4
E13001	RECTIFIER OVERHEAD CONDENSER	50	3.000	0.000	0.000	0.000	316LSS	1.4
E13002	AFTERCONDENSER	50	7.000	0.000	0.000	0.000	316LSS	1.4
V13027A	CESIUM ELUANT VESSEL A	50	3.000	0.000	0.000	0.000	316LSS	1.4
V13027B	CESIUM ELUANT VESSEL B	50	3.000	0.000	0.000	0.000	316LSS	1.4
V13067A	ELUATE RECEIPT VESSEL A	50	3.000	0.000	0.000	0.000	316LSS	1.4
V13067B	ELUATE RECEIPT VESSEL B	50	3.000	0.000	0.000	0.000	316LSS	1.4
V13068	EVAPORATOR CONSTANT VOLUME FEEDER	50	3.000	0.000	0.000	0.000	316LSS	1.4
V13071	RECOVERED ACID TANK	50	2.814	0.000	0.000	0.000	316LSS	1.4
V13073	CESIUM AND TECHNETIUM CONCENTRATE STORAGE TANK	50	4.839	0.000	0.000	0.000	316LSS	1.4
E13005	RECTIFIER OVERHEAD CONDENSER	50	3.000	0.000	0.000	0.000	316LSS	1.4
E13006	AFTERCONDENSER	50	7.000	0.000	0.000	0.000	316LSS	1.4
V13070A	TECHNETIUM ELUANT VESSEL A	50	3.000	0.000	0.000	0.000	316LSS	1.4
V13070B	TECHNETIUM ELUANT VESSEL B	50	3.000	0.000	0.000	0.000	316LSS	1.4
V15013	PRETREATMENT ACIDIC EFFLUENT VESSEL	50	7.000	0.000	0.000	0.000	316LSS	1.4
V15028A	PRE TREATMENT PROCESS CONDENSATE VESSEL A	50	7.000	0.000	0.000	0.000	316LSS	1.4

Table B-1. Best Model for System Specifications (Pretreatment)

Vessel Number	Description	Temp (deg C)	pH	Cl^- (ppm)	I-129 (ppm)	F^- (ppm)	Recommended Construction Material	Relative Cost
V15009	PRETREATMENT PLANT WASH VESSEL	50	13.313	2,279.391	0.711	4,234.190	304LSS	1.1
V15028B	PRETREATMENT PROCESS CONDENSATE VESSEL B	50	7.000	0.000	0.000	0.000	304LSS	1.1
E19701	NON-ACTIVE CONDENSATE OVERHEAD CONDENSER	50	7.000	0.000	0.000	0.000	304LSS	1.1
V19701	NON-ACTIVE CONDENSATE VESSEL	50	7.000	0.000	0.000	0.000	304LSS	1.1
V15018	PRETREATMENT CONTAMINATED CONDENSATE VESSEL	50	13.313	2,279.391	0.711	4,234.190	304LSS	1.1
V12001A	ENVELOPE D RECEIPT VESSEL A	51	13.353	8,973.559	1,389.928	558.626	304LSS	1.1
V12001B	ENVELOPE D RECEIPT VESSEL B	51	13.353	8,973.559	1,389.928	558.626	304LSS	1.1
V12001C	ENVELOPE D RECEIPT VESSEL C	51	13.353	8,973.559	1,389.928	558.626	304LSS	1.1
V12001D	ENVELOPE D RECEIPT VESSEL D	51	13.353	8,973.559	1,389.928	558.626	304LSS	1.1
V12001E	ENVELOPE D RECEIPT VESSEL E	51	13.353	8,973.559	1,389.928	558.626	304LSS	1.1
V12002	STRONTIUM / TRU PRECIPITATE VESSEL	51	13.353	8,973.559	1,389.928	558.626	304LSS	1.1
V12004A	HLW ULTRAFILTRATION FEED VESSEL A	90	13.353	8,973.559	1,389.928	558.626	316LSS	1.4
V12004B	HLW ULTRAFILTRATION FEED VESSEL B	90	13.353	8,973.559	1,389.928	558.626	316LSS	1.4
V12007A	HLW FEED BLENDING VESSEL A	50	14.338	11,537.784	14,513.102	2,091.430	304LSS	1.1
V12007B	HLW FEED BLENDING VESSEL B	50	14.338	11,537.784	14,513.102	2,091.430	304LSS	1.1
V12006A	HLW ULTRAFILTRATION PERMEATE COLLECTION VESSEL A	51	12.659	8,703.320	6.990	397.102	304LSS	1.1
V12006B	HLW ULTRAFILTRATION PERMEATE COLLECTION VESSEL B	51	12.659	8,703.320	6.990	397.102	304LSS	1.1

Table B-2. Best Model for System Specifications (LAW Vitrification)

Vessel Number	Description	Temp (deg C)	pH	Cl- (ppm)	I-129 (ppm)	F- (ppm)	Recommended Construction Material	Relative Cost
V21301	LAW MELTER FEED PREPARATION VESSEL	22	14.60	30,754.901	4.843	57,126.695	304LSS	1.1
V21302	LAW MELTER FEED VESSEL	22	14.60	30,754.901	4.843	57,126.695	304LSS	1.1
V21201	LAW MELTER FEED PREPARATION VESSEL	22	14.60	30,754.901	4.843	57,126.695	304LSS	1.1
V21202	LAW MELTER FEED VESSEL	22	14.60	30,754.901	4.843	57,126.695	304LSS	1.1
V21101	LAW MELTER FEED PREPARATION VESSEL	22	14.60	30,754.901	4.843	57,126.695	304LSS	1.1
V21102	LAW MELTER FEED VESSEL	22	14.60	30,754.901	4.843	57,126.695	304LSS	1.1
D22101	LAW VIT PLANT MELTER 1	1150	14.60	0.000	0.485	5,715.378	various	
C22101	LAW VIT PLANT MELTER SBS TANK 1	50	-0.06	0.000	0.000	38,452.046	Hastelloy	10
D22201	LAW VIT PLANT MELTER 2	1150	14.60	0.000	0.485	5,715.378	various	
C22201	LAW VIT PLANT MELTER SBS TANK 2	50	-0.06	0.000	0.000	38,452.046	Hastelloy	10
D22301	LAW VIT PLANT MELTER 3	1150	14.60	0.000	0.485	5,715.378	various	
C22301	LAW VIT PLANT MELTER SBS TANK 3	50	-0.06	0.000	0.000	38,452.046	Hastelloy	10
G22101	LAW VIT PLANT MELTER 1 CONDENSING WET ELECTROSTATIC PRECIPITATOR COLUMN	49.5	7.00	0.000	0.000	337,276.459	AL6XN or Hastelloy	10
G22201	LAW VIT PLANT MELTER 2 CONDENSING WET ELECTROSTATIC PRECIPITATOR COLUMN	49.5	7.00	0.000	0.000	337,276.459	AL6XN or Hastelloy	10
G22301	LAW VIT PLANT MELTER 3 CONDENSING WET ELECTROSTATIC PRECIPITATOR COLUMN	49.5	7.00	0.000	0.000	337,276.459	AL6XN or Hastelloy	10
E22001A	LAW VIT PLANT HEPA FILTER PREHEATER	70	gas	0.000	0.000	0.000	316LSS	1.4
E22001B	LAW VIT PLANT HEPA FILTER PREHEATER	70	gas	0.000	0.000	0.000	316LSS	1.4
G22001A	LAW VIT PLANT MELTER OFF-GAS FILTER (HEPA) UNIT	70	gas	0.000	0.000	0.000	304LSS	1.1
G22001B	LAW VIT PLANT MELTER OFF-GAS FILTER (HEPA) UNIT	70	gas	0.000	0.000	0.000	304LSS	1.1
C22006	LAW VIT PLANT SCR COLUMN 3	400	gas	0.000	0.000	0.000	304LSS	1.1
E22005	LAW VIT PLANT SCO PREHEATER	400	gas	0.000	0.000	0.000	304LSS	1.1
C22007	LAW VIT PLANT LAW MELTER OFF-GAS CAUSTIC SCRUBBER	52	11.7	0.000	0.000	0.000	304LSS	1.1
C22005	LAW VIT PLANT SCR COLUMN 2	400	gas	0.000	0.000	0.000	304LSS	1.1
C22004	LAW VIT PLANT SCR COLUMN 1	400	gas	0.000	0.000	0.000	304LSS	1.1
E22004	LAW VIT PLANT SCR COOLING HEAT EXCHANGER	400	gas	0.000	0.000	0.000	304LSS	1.1
E22002	LAW VIT PLANT SCR PROCESS HEAT EXCHANGER	52	11.7	0.000	0.000	0.000	304LSS	1.1
E22003	LAW VIT PLANT ELECTRIC SCR HEATER	400	gas	0.000	0.000	0.000	304LSS	1.1

Table B-3. Best Model for System Specifications (HLW Vitrification)

Vessel Number	Description	Temp (deg C)	pH	Cl^- (ppm)	I-129 (ppm)	F^- (ppm)	Recommended Construction Material	Relative Cost
V31101	HLW MELTER FEED PREPARATION	21	>7.00	14,154.225	12,236.011	1,836.816	Stellite	
V31102	HLW MELTER FEED VESSEL	22	>7.01	14,154.225	12,236.011	1,836.816	316LSS	1.4
D32101	HLW MELTER	1150	>7.00	0.000	826.338	124.038	various	
C32101	HLW OFF-GAS SUBMERGED BED SCRUBBER	50	-0.2	73.671	636.927	9.561	Hastelloy	10
V32101	HLW OFF-GAS SUBMERGED BED RECEIVER VESSEL	45	3.8	0.000	0.000	0.000	Hastelloy	10
C32102	HLW MELTER OFF-GAS WET ELECTROSTATIC PRECIPITATOR	45	7.0	45,998.993	0.000	5,969.248	AL6XN or Hastelloy	10
G32101A	HLW MELTER OFF-GAS HIGH EFFICIENCY MIST ELIMINATOR	46	0.4	0.000	0.000	0.000	Hastelloy	10
G32101B	HLW MELTER OFF-GAS HIGH EFFICIENCY MIST ELIMINATOR	46	0.4	0.000	0.000	0.000	Hastelloy	10
G32102A	HLW MELTER OFF-GAS HEPA FILTER	70	gas	0.000	0.000	0.000	316LSS	1.4
G32102B	HLW MELTER OFF-GAS HEPA FILTER	70	gas	0.000	0.000	0.000	316LSS	1.4
E32001	HLW MELTER OFF-GAS CONDENSER	40	2.6	0.000	23.272	3.144	316LSS	1.4
V32001	HLW MELTER OFF-GAS EFFLUENT COLLECTION TANK	33	0.5	24.418	35.354	3.168	316LSS	1.4
C32001	HLW MELTER OFF-GAS CAUSTIC SCRUBBER	30	14.0	0.000	159.829	3.419	304LSS	1.1
C32002	HLW OFF-GAS MELTER ORGANIC CATALYTIC OXIDIZER	300	gas	0.000	0.000	0.000	304LSS	1.1
V33001	HLW VIT PLANT CANISTER DECONTAMINATION TANK	50	acidic	0.000	0.000	0.000	Ti-2	15
V33002	HLW VIT PLANT WASTE NEUTRALIZATION TANK	50	7.0	0.000	0.000	0.000	Ti-2	15
V35001	HLW VIT PLANT LOW ACTIVITY WASTE VESSEL	50	7.0	0.000	0.000	0.000	Ti-2	15
V35002	HLW VIT PLANT CONDESATE COLLECTION VESSEL	50	7.0	0.000	0.000	0.000	Ti-2	15
V35003	HLW VIT PLANT ACIDIC WASTE VESSEL	50	7.0	0.000	0.000	0.000	Ti-2	15

Table B-4. System Specifications Relevant to Corrosion (at contract maximum levels for halides)

Facility	Area of Facility	Tank Description	Tank Number	Typifying Stream	Contract Maximum for Chloride and Flouride (US DOE, 1998) [Cl⁻] (ppm)	Relative Chloride to B Feed (Stream 22)	[F⁻] (ppm)	Relative Flouride to B Feed (Stream 22)	[I129⁻] (ppm)	Relative I-129 to D Feed (Stream 18)	pH (1)	Worst Case Temp (deg C)	Normal Condition Temp (deg C)
Pretreatment	Pretreatment Feed	LAW FEED EVAPORATOR FEED TANK A/B	V11001A/B	7	18,512.940	0.651	13,764.167	0.402	0.352	0.858	13.236	45	25
		EVAPORATOR RECIRCULATION VESSEL	V11002	1	82,712.685	2.910	61,495.968	1.797	1.571	3.832	13.946	50	
										0.000			
		ULTRAFILTER	G12003A/B G12004A/B	12	83,310.114	2.931	61,948.276	1.810	1.583	3.860	13.950	25	30
		ENTRAINED SOLIDS HOLD VESSEL A/B	V12016A/B	11	11,033.209	0.388	8,203.631	0.240	0.210	0.511	13.060	50.6	25
		ENTRAINED SOLIDS HOLD VESSEL A/B	V12016A/B	10	72,175.701	2.539	53,665.629	1.568	1.371	3.344	13.877	50	
		STRONTIUM / TRU PRECIPITATE VESSEL	V12002	109	269,043.492	9.465	1,789.048	0.052	0.000	0.000	13.799	50	
										0.000			
	Cesium Ion Exchange	Cs ION EXCHANGE COLUMN	C13001/4	6	72,182.084	2.539	53,668.753	1.568	1.371	3.344	13.877	50	25
		EVAPORATOR KETTLE	V13026	17	0.000	0.000	0.000	0.000	0.000	0.000	3.988	50	
		Mixer 7		111	0.000	0.000	0.000	0.000	0.000	0.000	4.004	50	
		RECTIFIER COLUMN	C13005	48	0.000	0.000	0.000	0.000	0.000	0.000	2.536	50	
		RECOVERED ACID TANK	V13028	51	0.000	0.000	0.000	0.000	0.000	0.000	2.510	50	
										0.000			
	Technicium Ion Exchange	Tc ION EXCHANGE COLUMN	C13006/9	13	72,189.490	2.540	53,677.331	1.568	1.372	3.345	13.876	50	25
		TECHNETIUM CONCENTRATE LUTE POT	V13072	70	0.000	0.000	0.000	0.000	0.000	0.000	5.635	50	
		Mixer 8		113	0.000	0.000	0.000	0.000	0.000	0.000	5.437	50	
		RECTIFIER COLUMN	C13010	65	0.000	0.000	0.000	0.000	0.000	0.000	2.815	50	
		RECOVERED ACID TANK	V13071	68	0.000	0.000	0.000	0.000	0.000	0.000	2.814	50	
										0.000			
	Sulfate Ion Exchange	SULPHATE ION EXCHANGE COLUMN	C13011	14	cnl	cnl	cnl	cnl	cnl	cnl	cnl	50	
		ELUANT PRODUCT AND NEUTRALISATION VESSEL	C13109	14?	cnl	cnl	cnl	cnl	cnl	cnl	cnl	50	
		TREATED LAW COLLECTION VESSEL A/C	V13110A/C	75	49,851.250	1.754	37,064.080	1.083	0.478	1.166	13.148	50	
		EVAPORATOR VESSEL	V11011	80	131,581.163	4.629	97,829.738	2.859	1.262	3.078	13.608	50	
	LAW Pretreatment Off Gas	PRETREATMENT CONTAMINATED CONDENSATE VESSEL	V15018	24	3,835.815	0.135	2,852.080	0.083	0.073	0.178	13.313	50	
		PRETREATMENT ACIDIC EFFLUENT VESSEL	V15013	not listed							?	50	
		VESSEL VENT SCRUBBER	C15001	101	0.085	0.000	0.063	0.000	0.012	0.028	gas-n/a	50	
		VESSEL VENT HEME A/B	G15001A/B	139	1.687	0.000	1.250	0.000	0.035	0.084	gas-n/a	50	
		HEPA PREHEATER	E15003								?	50	
		LAW FEED EVAPORATOR PROCESS CONDENSATE POT	V11005	169	96.149	0.003	68.908	0.002	0.451	1.099	12.478	55.6	50
	Cs and Tc Storage/Nitric Acid Recovery	BREAKPOT FOR CONCENTRATE STORAGE TANK	V13074	114	0.000	0.000	0.000	0.000	0.000	0.000	3.988	50	
		CESIUM AND TECHNETIUM CONCENTRATE STORAGE TANK	V13073	187	0.000	0.000	0.000	0.000	0.000	0.000	4.839	50	
		HLW FEED BLENDING VESSEL A/B	V12007A/B	115	191,036.799	6.720	1,270.330	0.037	0.000	0.000	13.670	50	
		Mix 15		157	0.000	0.000	0.000	0.000	0.000	0.000	7.000	50	

Table B-4. System Specifications Relevant to Corrosion (at contract maximum levels for halides)

Facility	Area of Facility	Tank Description	Tank Number	Typifying Stream	Contract Maximum for Chloride and Flouride (US DOE, 1998)				[I129⁻] (ppm)	Relative I-129 to D Feed (Stream 18)	pH (1)	Worst Case Temp (deg C)	Normal Condition Temp (deg C)
					[Cl⁻] (ppm)	Relative Chloride to B Feed (Stream 22)	[F⁻] (ppm)	Relative Flouride to B Feed (Stream 22)					
	HLW Pretreatment	ENVELOPE D RECEIPT VESSEL A/E	V12001A/E	171	15,100.929	0.531	376.281	0.011	142.472	347.482	13.353	50.6	38.3
		STRONTIUM / TRU PRECIPITATE VESSEL	V12002	171	15,100.929	0.531	376.281	0.011	142.472	347.482	13.353	50.6	38.3
		HLW ULTRAFILTER MODULE A/B	G12001A/B	200	cnl	cnl	cnl	cnl	cnl	cnl	cnl	50	
		HLW ULTRAFILTRATION PERMEATE COLLECTION VESSEL A/B	V12006A/B	20	14,646.164	0.515	267.481	0.008	0.717	1.748	12.659	50.6	25
		HLW ULTRAFILTRATION FEED VESSEL A/B	V12004A/B	207	cnl	cnl	cnl	cnl	cnl	cnl	0.000	90	25
		HLW FEED BLENDING VESSEL A/B	V12007A/B	19	19,416.072	0.683	1,408.753	0.041	1,487.638	3,628.275	14.338	50	
		CESIUM AND TECHNETIUM CONCENTRATE STORAGE TANK	V13073	145	27,002.853	0.950	1,402.625	0.041	1,421.876	3,467.883	14.328	50	
HLW Vitrification	HLW Vitrification	HLW MELTER FEED PREPARATION VESSEL	V31101	118	23,819.083	0.838	1,237.249	0.036	1,254.229	3,059.003	>7.00	21	
		HLW MELTER	D32101	120	1,608.475	0.057	83.550	0.002	84.702	206.585	>7.00	1150	
	Off gas treatment	HLW OFF-GAS SUBMERGED BED SCRUBBER	C32101	122	123.975	0.004	6.440	0.000	65.287	159.232	-0.150	50	
		HLW MELTER OFF-GAS WET ELECTROSTATIC PRECIPITATOR	C32102	126	77,408.254	2.723	4,020.786	0.117	0.000	0.000	7.000	45	
		HLW MELTER OFF-GAS HIGH EFFICIENCY MIST ELIMINATOR	G32101A/B	128	0.000	0.000	0.000	0.000	0.000	0.000	0.400	46	
		HLW OFF-GAS SUBMERGED BED RECEIVER VESSEL	V32101	121	0.000	0.000	0.000	0.000	0.000	0.000	3.800	45	
		HLW MELTER OFF-GAS HEPA FILTER	G32102A/B	132	12.402	0.000	0.644	0.000	1.306	3.185	gas	70	
		HLW MELTER OFF-GAS CONDENSER	E32001	134	40.760	0.001	2.118	0.000	2.385	5.818	2.600	40	
		HLW MELTER OFF-GAS CAUSTIC SCRUBBER	C32001	135	44.335	0.002	2.303	0.000	16.383	39.957	14.000	30	
		HLW OFF-GAS MELTER ORGANIC CATALYTIC OXIDIZER	C32002	106	cnl	cnl	cnl	cnl	cnl	cnl	gas	300	
		HLW MELTER OFF-GAS EFFLUENT COLLECTION TANK	V32001	137	41.092	0.001	2.134	0.000	3.624	8.839	0.500	33	
		Mix 8	V31001B	129	11,880.484	0.418	617.103	0.018	0.000	0.000	only 0.01 kg/year	70	
		Mix 7		170	33,289.754	1.171	1,729.200	0.051	0.000	0.000	11.800	44	
LAW Vitrification	LAW Vitrification	LAW MELTER FEED PREPARATION VESSEL	V21101/201/301	82	51,755.116	1.821	38,479.591	1.124	0.496	1.211	14.600	22	
		LAW VIT PLANT MELTER 1/2/3	D22101/201/301	85	5,177.877	0.182	3,849.783	0.112	0.050	0.121	14.600	1150	
	Off gas treatment	LAW VIT PLANT MELTER SBS TANK 1/2/3	C22101/201/301	87	34,831.722	1.225	25,900.658	0.757	0.000	0.000	-0.060	50	
		LAW VIT PLANT MELTER 1/2/3 CONDENSING WET ELECTROSTATIC PRECIPITATOR COLUMN	G22101/201/301	90	305,540.528	10.749	227,183.811	6.638	0.000	0.000	7.000	49.5	
		LAW VIT PLANT MELTER OFF-GAS FILTER (HEPA) UNIT	G22001A/B	92	47.820	0.002	35.556	0.001	0.046	0.112	only 16.86 kg/yr	70	
		LAW VIT PLANT LAW MELTER OFF-GAS CAUSTIC SCRUBBER	C22007	94	cnl	cnl	cnl	cnl	cnl	cnl	11.700	52	
		Mix 13		104	0.000	0.000	0.000	0.000	0.000	0.000	gas	487	

Table B-4. System Specifications Relevant to Corrosion (at contract maximum levels for halides)

Facility	Area of Facility	Tank Description	Tank Number	Typifying Stream	Contract Maximum for Chloride and Flouride (US DOE, 1998)				[I129⁻] (ppm)	Relative I-129 to D Feed (Stream 18)	pH (1)	Worst Case Temp (deg C)	Normal Condition Temp (deg C)
					[Cl⁻] (ppm)	Relative Chloride to B Feed (Stream 22)	[F⁻] (ppm)	Relative Flouride to B Feed (Stream 22)					
		LAW VIT PLANT SCR COLUMN 1/2/3	C22004/5/6	96	47.697	0.002	35.465	0.001	0.046	0.112	gas	400	
		LAW VOC		97	414.596	0.015	308.270	0.009	0.279	0.681	gas	650	
		Mix ?		91	37,880.835	1.333	28,169.570	0.823	0.000	0.000	-0.100	50	

Temperatures taken from BNFL Inc.'s most current datasheets for each tank as of 7-31-99.

Iodine-129 is assumed to be the only iodine present. I-129 is a fission product and is the only isotope that has been quantified in the tanks. I-127 may have been added as an impurity in industrial grade NaOH solutions but no analytical work has been performed. Chloride is the most corrosive of the halogen ions in terms of pitting and crevice corrosion.

(1) pH for the pretreatment facility is calculated from the mass balance by Vicky Richards and Martin Coleman (Coleman, 1998); pH for the HLW and LAW vitrification facilities are taken from a mass balance by Jim Rouse (Rouse, 1999).

Supplement 8

Completion Schedule

The following table is a compilation of items referenced in the River Protection Project - Waste Treatment Plant (RPP-WTP) Dangerous Waste Permit Application (DWPA), the RPP-WTP-Emergency Management Plan, the RPP-WTP Environmental Performance Demonstration Plan (EPDP), the Quality Assurance Project Plan (QAPjP) for the EPDP, the Waste Analysis Plan, and the QAPjP for the Waste Analysis Plan which are scheduled to be provided to the Washington State Department of Ecology (Ecology) at a later date as the design matures. As the information indicated in the table below becomes available, it will be submitted to Ecology and, where appropriate or applicable, incorporated into the RPP-WTP Dangerous Waste Permit pursuant to relevant permit modification requirements.

BNFL Inc. commits to provide the additional information within a specified time period from key Project events. Target dates are provided on which the RPP-WTP anticipates providing the information to Ecology.

Key Project events include: End of Design, End of Construction, Start of Readiness Review, and Start of Hot Operations.

The column titled "Duration for Activity Completion" defines the amount of time required to complete and obtain internal and DOE concurrence for individual items or deliverables before they are submitted to Ecology. This activity completion period consists of final information preparation and packaging by BNFL Inc., integration into applicable environmental compliance documents, formal DOE review and comment cycles as stipulated in the RPP-WTP contract, and final document preparation prior to being submitted to Ecology.

The final column to the far right of the Completion Schedule table titled "Target Date to Ecology" provides target dates for which the RPP-WTP anticipates providing individual completion schedule items to Ecology. It is important to note that the dates indicated in the "Target Dates to Ecology" column are dependent upon the fixed duration period, and are therefore sensitive to external influences such as funding shortfalls, unforeseen technical barriers, or extended review cycles imposed by the client or third party direction. Should this fixed duration period change, the target dates may require modification and will be negotiated with Ecology in accordance with WAC 173-303-830, *"Permit Changes."*

Tracking Number	Item Description	Regulatory Requirement	DWPA Reference	Key Project Event	Duration for Activity Completion	Target Date to Ecology
Chapter 2						
CP02-001	The following traffic-related information will be provided: • Traffic patterns on-site • Estimated volumes of traffic including number and types of vehicles that travel on-site • Traffic control signs, signals, and procedures • Adequacy of access and on-site roads, including road surfacing and load bearing capacity • Show which areas on-site are asphalt and which are concrete	WAC 173-303-806(4)(a)(x); Ecology Permit Guidance B-4	2.4	End of Design for BOF[1]	11 months following End of Design	28 Feb 05
CP02-002	Provide start of RPP-WTP construction date.	Ecology Permit Guidance B-1b	2.1.5	Start of Construction	-	TBD
Chapter 3						
CP03-001	Develop Analytical Laboratory Standard Operating Procedures	WAC 173-303-300	3	Start of Readiness Review for PT	5 months after Start of Readiness Review	31 Dec 06
CP03-002	Identify Analytical Laboratory Critical Spares	WAC 173-303-300	3B	Start of Readiness Review for PT	5 months after Start of Readiness Review	31 Dec 06
CP03-003	Develop Training Requirements for Sampling and Laboratory Personnel	WAC 173-303-300	3B	Start of Readiness Review for PT	5 months after Start of Readiness Review	31 Dec 06
CP03-004	Develop a Laboratory Quality Program	WAC 173-303-300	3B	Start of Readiness Review for PT	5 months after Start of Readiness Review	31 Dec 06

Tracking Number	Item Description	Regulatory Requirement	DWPA Reference	Key Project Event	Duration for Activity Completion	Target Date to Ecology
Chapter 4						
CP04-001	Pretreatment system design package: • PFDs • Layouts • Mechanical Handling Diagrams.	806(4)(c), 640	4.2.2	End of Design for PT	11 months following End of Design	30 Apr 04
CP04-002	LAW Pretreatment system design package: • PFDs • Layouts • Mechanical Handling Diagrams.	806(4)(c), 640	4.2.3	End of Design for PT	11 months following End of Design	30 Apr 04
CP04-003	LAW Vitrification system design package: • PFDs • Layouts • Mechanical Handling Diagrams.	806(4)(c), 640	4.2.4	End of Design for LAW[2]	11 months following End of Design	31 July 04
CP04-004	HLW Vitrification system design package: • PFDs • Layouts • Mechanical Handling Diagrams.	806(4)(c), 640	4.2.5	End of Design for HLW[3]	11 months following End of Design	31 Dec 04
CP04-005	Container compatibility with waste.	WAC 173-303-630(4)	4.3.1	End of Design for BOF	11 months following End of Design	28 Feb 05
CP04-006	Container tracking system.	WAC-173-303-630(3)	4.3.1	End of Construction for HLW	11 months following End of Construction	31 July 07
CP04-007	Certification of the structural integrity of the base of all container storage areas.	806(4)(b)(i) WAC 173-303-630(7)(a)	4.3.1	End of Design for BOF	11 months following End of Design	28 Feb 05
CP04-008	Drawings which demonstrate roof drainage for container storage areas	806(4)(b)(i) WAC 173-303-630(7)(a)	4.3.1	End of Design for BOF	11 months following End of Design	28 Feb 05

Tracking Number	Item Description	Regulatory Requirement	DWPA Reference	Key Project Event	Duration for Activity Completion	Target Date to Ecology
CP04-010	Final tank designs and assessment.	WAC 173-303-640(2)(c)	4.3.2	End of Design for BOF	11 months following End of Design	28 Feb 05
CP04-011	Final tank operating parameters (PFDs).	WAC 173-303-640(3)(c)	4.3.2	End of Design for BOF	11 months following End of Design	28 Feb 05
CP04-015	Piping corrosion protection method (for underground piping only).	WAC 173-303-640(3)(c)(e)(f)(g)	4.3.2	End of Design for BOF	11 months following End of Design	28 Feb 05
CP04-016	Corrosion expert assessment for piping (for underground piping only).	WAC 173-303-640(3)(c)(e)(f)(g)	4.3.2	End of Design for BOF	11 months following End of Design	28 Feb 05
CP04-017	Certification of the Pretreatment, LAW Pretreatment, LAW Vitrification and HLW Vitrification Plants design.	WAC 173-303-860(4)(c)	4.3.2	End of Design for BOF	11 months following End of Design	28 Feb 05
CP04-018	Certified tank system installation reports.	WAC 173-303-640(3)(c)(e)(f)(g)	4.3.2	Start of Readiness Review for PT	5 months after Start of Readiness Review	31 Dec 06
CP04-019	Description of methods for the management of releases to sumps/secondary containment drain.	806(4)(c)(vii) WAC 173-303-640(4)	4.3.2	Start of Readiness Review for PT	5 months after Start of Readiness Review	31 Dec 06
CP04-020	Secondary containment design	WAC 173-303-640(4)	4.3.2	End of Design for BOF	11 months following End of Design	28 Feb 05
CP04-021	Description of Sump content removal procedures.	WAC 173-303-640(4) 806(4)(c)(vii)	4.3.2	End of Construction for HLW	11 months following End of Construction	31 July 07
CP04-022	Final LAW melter design	WAC 173-303-680(2)	4.3.3	End of Design for LAW	11 months following End of Design	31 July 04
CP04-023	Final HLW melter design	WAC 173-303-680(2)	4.3.3	End of Design for HLW	11 months following End of Design	31 Dec 04

Tracking Number	Item Description	Regulatory Requirement	DWPA Reference	Key Project Event	Duration for Activity Completion	Target Date to Ecology
CP04-024	LAW treatment effectiveness reports.	WAC 173-303-680(3)	4.3.3	Start of Readiness Review for LAW	5 months after Start of Readiness Review	31 Jan 07
CP04-025	HLW treatment effectiveness reports.	WAC 173-303-680(3)	4.3.3	Start of Readiness Review for HLW	5 months after Start of Readiness Review	30 Nov 07
CP04-026	Cause or activation of automated waste feed cut-off system in HLW Vitrification facility.	WAC 173-303-680(2)(c)	4.3.3	Beginning of Hot Start for HLW	9 months prior to Hot Start	31 Dec 07
CP04-027	Cause or activation of automated waste feed cut-off system in LAW Vitrification facility.	WAC 173-303-680(2)(c)	4.3.3	Beginning of Hot Start for HLW	9 months prior to Hot Start	31 Dec 07
CP04-028	Design of Containment Building for construction. (Note: Containment buildings are: • Pretreatment C3 Workshop • Pretreatment Maintenance Area • LAW LSM Gallery • ILAW Container Finishing Cave • ILAW Fixative Cave • LAW Vitrification Plant C3 Workshop • HLW Melter Cave • IHLW Container Weld Cave • IHLW Container Decontamination Cave • LAW Vitrification Plant C3 Workshop	40 CFR 264 1101(a)	4.3.4	End of Design for BOF	11 months following End of Design	28 Feb 05
CP04-029	Certification of Containment Building Design.	40 CFR 264 1101(c)(2)	4.3.4	End of Design for BOF	11 months following End of Design	28 Feb 05
CP04-030	Description of procedures for reporting releases from the containment building.	40 CFR 264 1101(c)(3)	4.3.4	Start of Readiness Review for PT	5 months after Start of Readiness Review	31 Dec 06

Tracking Number	Item Description	Regulatory Requirement	DWPA Reference	Key Project Event	Duration for Activity Completion	Target Date to Ecology
Chapter 6						
CP06-001	Inspection item component numbers	WAC 173-303-320	6.2.1.1, & Appendix 6A	Start of Readiness Review for PT	5 months after Start of Readiness Review	31 Dec 06
CP06-002	Description of barriers and procedures for controlling entry to the RPP-WTP.	WAC 173-303-310	6.1.1.2	Start of Readiness Review for PT	5 months after Start of Readiness Review	31 Dec 06
CP06-003	Procedures, structures, and/or equipment used to prevent hazards and contain spills at loading areas for containers storing waste.	WAC 173-303-806	6.4.1	Start of Readiness Review for PT	5 months after Start of Readiness Review	31 Dec 06
CP06-004	Tracking system format, access, and maintenance. Controls to assure accurate information input. How records will be maintained. Remedial actions for problems revealed with canisters or containers that fail inspection	WAC 173-303-380	6.2.4.1	Start of Readiness Review for PT	5 months after Start of Readiness Review	31 Dec 06
CP06-005	Detailed design for the raw water distribution system, including adequacy of water volume and pressure to supply fire fighting needs.	WAC 173-303-340	6.3.1.4	End of Design for BOF	11 months following End of Design	28 Feb 05
CP06-006	Procedures, structures, UPS Systems, backup power systems, and other and equipment used to mitigate effects of equipment failure and power outages.	173-303-806(4)	6.4.4	Start of Readiness Review for PT	5 months after Start of Readiness Review	31 Dec 06
Chapter 7						
CP07-001	Document status of Emergency Management Agreements.	N/A	1.1	End of Construction for HLW	11 months following End of Construction	31 July 07
CP07-002	Determine the date when this Emergency Management Plan will come into affect.	N/A	1.1	End of Construction for HLW	11 months following End of Construction	31 July 07
CP07-003	Material Safety data sheets will be provided in key locations of the RPP-WTP-WTP.	N/A	1.6.1	Start of Readiness Review for PT	5 months after Start of Readiness Review	31 Dec 06

Tracking Number	Item Description	Regulatory Requirement	DWPA Reference	Key Project Event	Duration for Activity Completion	Target Date to Ecology
CP07-004	BNFL Inc. will develop RPP-WTP specific Emergency Action Levels from the emergency preparedness hazards assessment.	N/A	4.4	Start of Readiness Review for PT	5 months after Start of Readiness Review	31 Dec 06
CP07-005	Develop the RPP-WTP emergency planning zone (size) from the emergency preparedness hazards assessment.	N/A	4.5.2., 7.3.1, Figure 7-1	Start of Readiness Review for PT	5 months after Start of Readiness Review	31 Dec 06
CP07-006	Notifications for abnormal and emergency events will be conducted in accordance with the Emergency Notification Flow Diagram. Develop the Emergency Notification Flow Diagram	N/A	5.4., Figure 5-1	Start of Readiness Review for PT	5 months after Start of Readiness Review	31 Dec 06
CP07-007	BNFL Inc. will develop procedure(s) to ensure implementation of environmental notifications and reporting, in accordance with federal, state or local requirements and agreements.	N/A	5.7, 5.7.2	Start of Readiness Review for PT	5 months after Start of Readiness Review	31 Dec 06
CP07-008	BNFL will determine the location and communication equipment of a primary and alternate Incident Command Post.	N/A	5.8.2	End of Construction for HLW	11 months following End of Construction	31 July 07
CP07-009	BNFL Inc. will determine the personnel shelter locations.	N/A	Table 7-1	End of Construction for HLW	11 months following End of Construction	31 July 07
CP07-010	BNFL Inc. will provide a description of a program and procedure(s) for providing the public emergency information.	N/A	10.2, 10.5.2	Start of Readiness Review for PT	5 months after Start of Readiness Review	31 Dec 06
CP07-011	BNFL Inc. will determine the location and capabilities of the RPP-WTP Health Care Center	N/A	11.3.4.1	Start of Readiness Review for PT	5 months after Start of Readiness Review	31 Dec 06
CP07-012	BNFL Inc. will determine the location and capabilities of the RPP-WTP personnel decontamination facilities	N/A	11.3.4.1	Start of Readiness Review for PT	5 months after Start of Readiness Review	31 Dec 06

Tracking Number	Item Description	Regulatory Requirement	DWPA Reference	Key Project Event	Duration for Activity Completion	Target Date to Ecology
CP07-013	BNFL Inc. will determine the location and capabilties of an alternate Incident Command Post.	N/A	11.3.6	Start of Readiness Review for PT	5 months after Start of Readiness Review	31 Dec 06
CP07-014	BNFL Inc. inventory control and documentation procedure(s) will be developed to include emergency equipment.	N/A	11.7	Start of Readiness Review for PT	5 months after Start of Readiness Review	31 Dec 06
CP07-015	BNFL Inc. will develop an emergency preparedness figure of the location of the RPP-WTP Emergency Facilities	N/A	Figure 11-2	End of Construction for HLW	11 months following End of Construction	31 July 07
CP07-016	The BNFL Inc. vital records program will be developed and include emergency preparedness and response requirements in accordance with 36 CFR 1236.	N/A	14.7	Start of Readiness Review for PT	5 months after Start of Readiness Review	31 Dec 06
CP07-017	Provisions will be in place for the control, monitoring, and maintenance of records of personnel exposures to hazardous materials in response to emergency conditions.	N/A	14.8	Start of Readiness Review for PT	5 months after Start of Readiness Review	31 Dec 06
Chapter 11						
CP11-002	More specific detail on how each unit will be closed.	173-303-610(3)(a)	11.3, 11.6	End of Construction for HLW	11 months following End of Construction	31 July 07
CP11-004	Designation of waste streams generated during closure.	173-303-610(3)(a)(iv)	11.2	End of Construction for HLW	11 months following End of Construction	31 July 07
CP11-005	Health and Safety plan for closure- outline.	173-303-283(3)(i) and OSHA	11.2	End of Construction for HLW	11 months following End of Construction	31 July 07
CP11-007	Plans for debris and melter packaging and encapsulation.	173-303-610(3)(a)(iv) and (v), 173-303-610(5)	11.2, 11.3.3	End of Construction for HLW	11 months following End of Construction	31 July 07

Tracking Number	Item Description	Regulatory Requirement	DWPA Reference	Key Project Event	Duration for Activity Completion	Target Date to Ecology
CP11-008	Encapsulation equipment, procedures and locations.	173-303-610(3)(a)(iv) and (v), 173-303-610(5)	11.2, 11.3.3	Start of Readiness Review for HLW	5 months after Start of Readiness Review	30 Nov 07
CP11-011	Preliminary rinsate indicator parameters (COCs) and concentration limits (designation limits).	173-303-610(2)(b)	11.2, 11.2.3, 11.3.3, 11.3.4.1	End of Construction for HLW	11 months following End of Construction	31 July 07
CP11-015	Closure standard to minimize post-closure escape of dangerous waste.	173-303-610(2)(a)(ii) and 173-303-680(2)(c)	11.3.3.2	Start of Readiness Review for HLW	5 months after Start of Readiness Review	30 Nov 07
CP11-016	RPP-WTP Site Drainage Plan (runoff control during closure).	173-303-610(3)(a)(vi)	11.4.2	End of Construction for HLW	11 months following End of Construction	31 July 07
Environmental Performance Demonstration Plan						
CPS2-001	A table of key LAW offgas measurement parameters, instrument numbers and associated drawing numbers.	WAC 173-303-807(2)(b)i-x	EPDP[a]-2.3.3	Beginning of Hot Start for LAW	9 months prior to Hot Start	30 Apr 07
CPS2-002	A table of key HLW offgas measurement parameters, instrument numbers, and associated drawing numbers.	WAC 173-303-807(2)(b)i-x	EPDP-2.4.3	Beginning of Hot Start for LAW	9 months prior to Hot Start	30 Apr 07
CPS2-003	A table listing parameters used to control and measure performance of the LAW and HLW miscellaneous treatment units: SRE test values, shakedown period values, post test operations values, and comments.	WAC 173-303-670(4) WAC 173-303-807(6)a-e	EPDP-3.3	Beginning of Hot Start for LAW	9 months prior to Hot Start	30 Apr 07
CPS2-004	Details on the approach for startup of the RPP-WTP.	WAC 173-303-807(2)b-c	EPDP-3.4	Beginning of Hot Start for LAW	9 months prior to Hot Start	30 Apr 07
CPS2-005	Final selection of sampling locations based on final detailed design and to adequately perform quantitative analysis for estimating fate of the trial PODCs.	WAC 173-303-807(2)c	EPDP-4	Beginning of Hot Start for LAW	9 months prior to Hot Start	30 Apr 07

Tracking Number	Item Description	Regulatory Requirement	DWPA Reference	Key Project Event	Duration for Activity Completion	Target Date to Ecology
CPS2-006	Detailed schedule of the environmental performance demonstration activities, including: day-by-day breakdown of activities, sampling run numbers, estimated sampling durations, and estimates of the quantity of simulants to be used.	WAC 173-303-807(2)c-h	EPDP-5	Beginning of Hot Start for HLW	9 months prior to Hot Start	31 Dec 07
CPS2-007	Selection of PODCs to be measured during the environmental performance demonstration performance.	WAC 173-303-807(4)	EPDP-6.3	Beginning of Hot Start for HLW	9 months prior to Hot Start	31 Dec 07
CPS2-008	Information regarding automatic waste feed cutoffs to be employed with the HLW and LAW miscellaneous treatment units.	WAC 173-303-807(2)g	EPDP-7	Beginning of Hot Start for HLW	9 months prior to Hot Start	31 Dec 07
CPS2-009	Listing of desired permit conditions for the HLW and LAW miscellaneous treatment units and Group A, B, and C operating parameters.	WAC 173-303-670(5)a-c	EPDP-9	Beginning of Hot Start for HLW	9 months prior to Hot Start	31 Dec 07
Quality Assurance Project Plan for the Environmental Performance Demonstration Plan						
CPS3-001	Risk-based quantitation limits including practical quantitation limits (PQLs) and method detection limits (MDLs) for PODCs and potential PICs will be provided in this section.	WAC 173-303-670(2)&(3) WAC 173-303-807(2)(a)i-v	QAPjP 4.3	Beginning of Hot Start for HLW	9 months prior to Hot Start	31 Dec 07
CPS3-002	The cross-section layout of the offgas sampling locations and the location of each traverse point will be presented when the design is completed.	WAC 173-303-807(2)c	QAPjP 5.1	Beginning of Hot Start for LAW	9 months prior to Hot Start	30 Apr 07
CPS3-003	Specifics regarding glass sampling will be provided upon completion of engineering optimization activities.	WAC 173-303-670(2)(3)&(4) WAC 173-303-807(2)iii	QAPjP 5.3	Beginning of Hot Start for LAW	9 months prior to Hot Start	30 Apr 07
CPS3-004	Method for sampling PODCs in the scrubbers.	WAC 173-303-807(6)c	QAPjP 5.4	Beginning of Hot Start for LAW	9 months prior to Hot Start	30 Apr 07

Tracking Number	Item Description	Regulatory Requirement	DWPA Reference	Key Project Event	Duration for Activity Completion	Target Date to Ecology
CPS3-005	Information about process and offgas monitoring equipment involved with the environmental performance testing program will be provided when the design has been completed.	WAC 173-303-807(2)f	QAPjP 5.5	Beginning of Hot Start for LAW	9 months prior to Hot Start	30 Apr 07
CPS3-006	Selection and identification of sampling and analytical contractors in the updated QAPjP.	WAC 173-303-670(5)&(6)	QAPjP 8.0	Beginning of Hot Start for LAW	9 months prior to Hot Start	30 Apr 07

[1] BOF = Balance of Facilities
[2] LAW = Low Activity Waste Vitrification Plant
[3] HLW = High Level Waste Vitrification Plant

Supplement 9

Supplement 9
Engineering Drawings

[See Drawings]

The drawings are at the end of this document
(Section 11 of 11)

Supplement 10

Supplement 10
Business Sensitive and Confidential Engineering Drawings

[See Drawings]

Business Sensitive Information (US Department of Energy)

This document contains Business Sensitive information. This information should not be disclosed, without prior written consent of BNFL Inc., to any organization or person other than the organization or person to whom it was submitted because it contains information which is commercial or financial, and is privileged or confidential.

Confidential Information (Washington State Department of Ecology)

This document contains Confidential information, BNFL Inc. requests that the information submitted in this supplement be made available only for the confidential use of the director, the department, or the appropriate division of the department.

Notice of Confidentiality

Under Revised Code of Washington RCW 43.21A and 40CFR270.12, the attached report includes data that shall not be duplicated, used, or disclosed, in whole or in part, outside of the United States Environmental Protection Agency or the State of Washington Departments of Ecology and of Health and other related agencies for any purpose other than that specified in the transmitting correspondence. This restriction does not limit the rights of the agencies and departments to use or disclose data obtained without restriction from other sources.

Proprietary Information

This document contains GTS Duratek proprietary information, which is provided in accordance with BNFL Inc. Contract No. W375-SC-4173W375-SC-4173 under D.O.E prime contract No. DE-AC06-96RL13308. This proprietary information shall not be duplicated, reduced to electronic or optical media or electronic storage, used, or disclosed - in whole or in part - for any purpose other than for evaluation of its technical content. Recipient shall not disclose the contents of this document, directly or indirectly, to any third party and shall not use the proprietary information contained herein for any purpose other than in connection with his or her assigned duties in accordance with the referenced contract, without the express written permission of GTS Duratek.

Supplement 11

Supplement 11
Report of Pre-Submittal Meeting

012313

BNFL Inc.

Group Chair/ Secretary *Mike Lawrence, Sandi Murdock*

Meeting Minutes

Meeting *February 22, 2000, 7 p.m.*
Best Western Tower Inn and Convention Center, Richland, WA

Next Meeting Purpose *DWPA Pre-submittal Meeting*

Prepared by Sandi Murdock

MEETING SUMMARY:

Representatives from BNFL Inc., the U.S. Department of Energy, and the Washington State Department of Ecology met with approximately 35 community members in Richland, Washington February 22, 2000 to discuss the Dangerous Waste Permit Application (DWPA) for the River Protection Project Waste Treatment Facility (RPP-WTP). This application requests a modification to the existing Hanford Site-Wide Resource Conservation and Recovery Act (RCRA) Part B Permit, and is scheduled to be submitted to the State April 28, 2000.

Senior managers from BNFL Inc. provided an overview of the RPP-WTP facility and discussed the purpose and structure of the DWPA. Representatives from the Washington State Department of Ecology also provided an overview of the regulations and requirements framing the development of the DWPA. Audience members were encouraged to actively participate in the discussion, and raised a number of issues, questions, and concerns. Topical areas for these issues, questions, and concerns are summarized below:

Facility Design

- **RPP-WTP Operating Schedule:** *How much of Hanford's tank waste will be processed by the RPP-WTP?*

  - **Response:** 10 percent of Hanford's tank waste by volume, or 25 percent of the tank waste by radioactivity will be processed through the RPP-WTP during Phase I of the vitrification project. If authorized by DOE, the RPP-WTP site will have the expansion capacity for adding an additional high-level waste melter in the existing HLW vitrification facility, and for building a duplicate low-activity waste vitrification plant. If authorized by DOE, with these expansions, the RPP-WTP has

the capacity to process all of Hanford's tank waste by approximately 2048. These expansions are estimated to cost approximately $450M - $500M.

- **RPP-WTP Melter Assembly Building:** *What is the purpose of the Melter Assembly Building?*

  - **Response:** The Melter Assembly Building will be used as a staging area for building and storing new melters going into the RPP-WTP facility.

- **Off-gas Treatment System:** *There was an incident with ruthenium emissions which required off-gas system redesign work at BNFL Inc.'s Sellafield plant in the United Kingdom. What lessons were learned from the Sellafield incident, and how are those lessons being applied today in designing the RPP-WTP off-gas system?*

  - BNFL Inc. is taking great care to incorporate a number of contingencies into the RPP-WTP off-gas system to provide maximum flexibility in managing and controlling off-gas emissions in the facility. The off-gas resulted from the RPP-WTP vitrification processes will be treated prior to discharge to the plant stack. At the minimum, the off-gas treatment system will include a submerged bed scrubber, a wet electrostatic precipitator, a thermal oxidizer and high efficiency particulate air (HEPA) filters. The off-gas treatment system will meet all applicable air regulations.

- **Glass Volume:** *What is the impact of incorporating sulfates into the waste feed stream? How much additional glass will be produced in incorporating sulfate?*

  - **Response:** BNFL Inc. estimates that the total increase in glass volume due to sulfate incorporation is less than 30 percent more than what was originally projected. The actual volume will vary by glass recipe, depending on the amount of sodium contained in the individual batches of waste transferred from the Double Shell Tank System Unit.

Waste Disposal

- **IHLW Repository Availability:** *What provisions are being considered in the event that the Yucca Mountain high-level waste repository is not available to accept immobilized high-level waste from Hanford?*

  - **Response:** BNFL Inc. is working to a specific set of requirements as currently defined by the U.S. Department of Energy at its Yucca Mountain Site in Nevada, and will produce an immobilized high-level waste product that meets these requirements. Immobilized high-level waste, once processed through the River Protection Project Waste Treatment Plant will be managed by the DOE Office of River Protection stored on an interim basis until it is transferred to Yucca Mountain for permanent disposal.

- **DWPA Scope:** *Does this permit modification cover disposal of IHLW?*

  - **Response:** Disposal of IHLW is the responsibility of DOE, and is outside of the scope of BNFL Inc.'s contract with DOE.

- **RPP-WTP – Failed Melters:** *What happens to melters that fail or are no longer functioning properly?*

  - **Response:** In the course of processing Hanford tank waste, BNFL Inc. expects that melters will need to be exchanged through the life-cycle of the facility. As such, low-activity waste melters will be transferred to DOE for storage and/or disposal; high-level waste melters will be stored at the RPP-WTP, and will be disposed of at the end the activity contract.

Community Impacts:

- **BNFL Inc. Personal Property Tax:** *What is the impact of the RPP-WTP facility on the local community infrastructure? What is the real impact of applying a cost per log tax on the facility?*

  - **Response:** The greatest concern with imposing a personal property tax on the RPP-WTP facility is in obtaining the necessary funding from Congress for the project. Congressional members have clearly stated their reluctance to support a $1B increase to the RPP-WTP facility's $6.9B budget to accommodate a personal property tax, and have indicated that should the tax be imposed, funding for the project could be in jeopardy.

Risk Assessment

- **Risk Assessment Work Plan:** *What approach is BNFL Inc.'s using in developing the Risk Assessment Work Plan? Are the models and techniques used by BNFL Inc. the same as those being applied by Ecology?*

  - **Response:** Yes, BNFL Inc. is using updated guidance issued by Ecology and the U.S. Environmental Protection Agency to perform the risk assessment.

Current Activities

- **Site Preparation:** *What activities are underway to prepare for construction of the RPP-WTP facility?*

  - **Response:** Preliminary site work performed by BNFL Inc. includes clearing and preparing land for a sub-station, and conducting soil surveys for seismic design studies.

Post-Operational Activities

- **Facility Closure:** *What are BNFL Inc.'s plans for facility deactivation and closure?*

  - BNFL Inc.'s plans for facility deactivation and closure are included in the Dangerous Waste Permit Application. BNFL Inc. is responsible for deactivating the facility and preparing it for transfer to DOE's management and control at the end of its life cycle. DOE currently assumes responsibility for all decontamination and decommissioning activities required at the RPP-WTP facility.

Signature

Sandi K Murdock

Attendees & Distribution

Attendees					
See attached Sign-in Sheet(s)					

Distribution					
P. Berlin		D. Blumenkranz		O.L. Bostic	
J. Brown		G. Carter		J. Cook	
A. Dobson		A. Elsden		C. Gesell	
G. Harvey		M. Lawrence		J. Markillie	
S. Murdock		G. Normandin		M. Procter	
P. Shanley		J. Sipkowski		J. Su-Coker	
D. Yasek					

Attachments

1) Meeting Sign-in Sheet(s)
2) Presentation Handout

Public Participants Sign-in List (Original list on file):

Steve Airhart
Colin Austin
Peter Bengston
Al Boldt
Al Brookings
Don Brown
Gary Carter
Rachel Carter
Gerald Crawford
Paul Day
Rodger Dickey
Alan Dobson
Donald E. Clark
Linda Fergestron
James Fu
Al Hawkins
Harold Heacock
Lori Huffman
Ken J. Schneider
Marilyn Jueguilan
Jay K. Shah
H.R. Kosmoto
Megan Lerchen
Tony McKarns
Ruth Ann Kirk
J.L. Morse
Vince Panecko
Max Power
Gordon Rogers
Robert Schiller
John Stang
Greg Starkebaum
Joy Turner
Oliver Wang
Mary Anne Wuennecke
Ian Wheeler

BNFL Inc. Public Forum

Dangerous Waste Permit Application Pre-Submittal Meeting

River Protection Project-Waste Treatment Plant
Office of River Protection
Washington Dept. of Ecology

February 22, 2000

BNFL Inc.
River Protection Project
Waste Treatment Plant
BECHTEL
GTS DURATEK
SAIC

Meeting Agenda

- Project Update -
  Mike Lawrence, BNFL Inc.
- The Process -
  Elizabeth McManus, Washington Dept. of Ecology
- The Waste Treatment Plant -
  Andy Elsden, BNFL Inc.
- The Permit Application -
  Alan Dobson, BNFL Inc.
- Discussion and Dialogue

Status of Waste Treatment Plant

- $450m reserve set-aside for FY 2001
- Delivery of Fixed Price Proposal to DOE-ORP on April 24, 2000
- Baseline with trends in target range
- Technical issues resolved or bounded
- Financing proceeding well
- Organization and management structure defined

RPP-WTP Project Concept

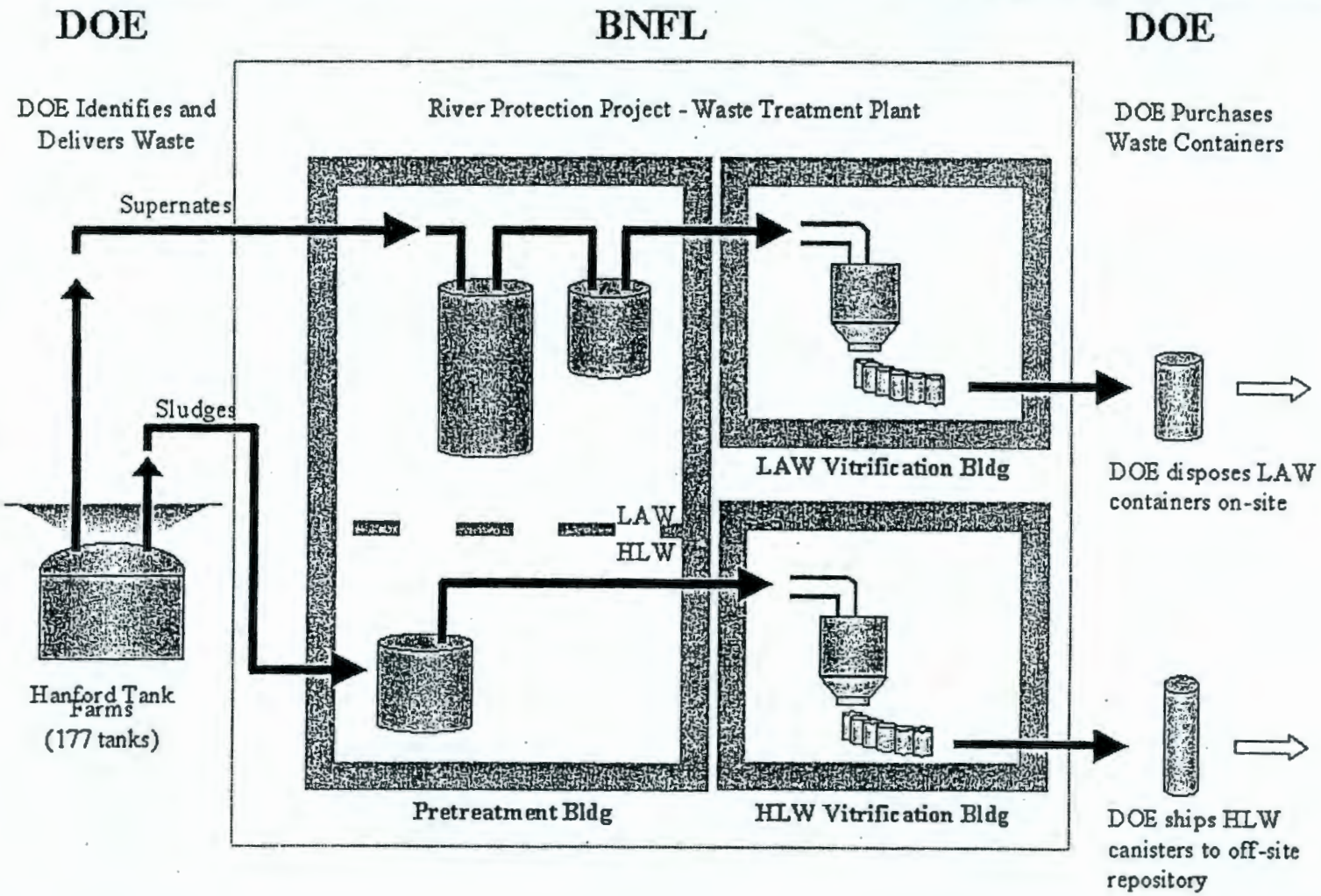

RPP - WTP Site Model

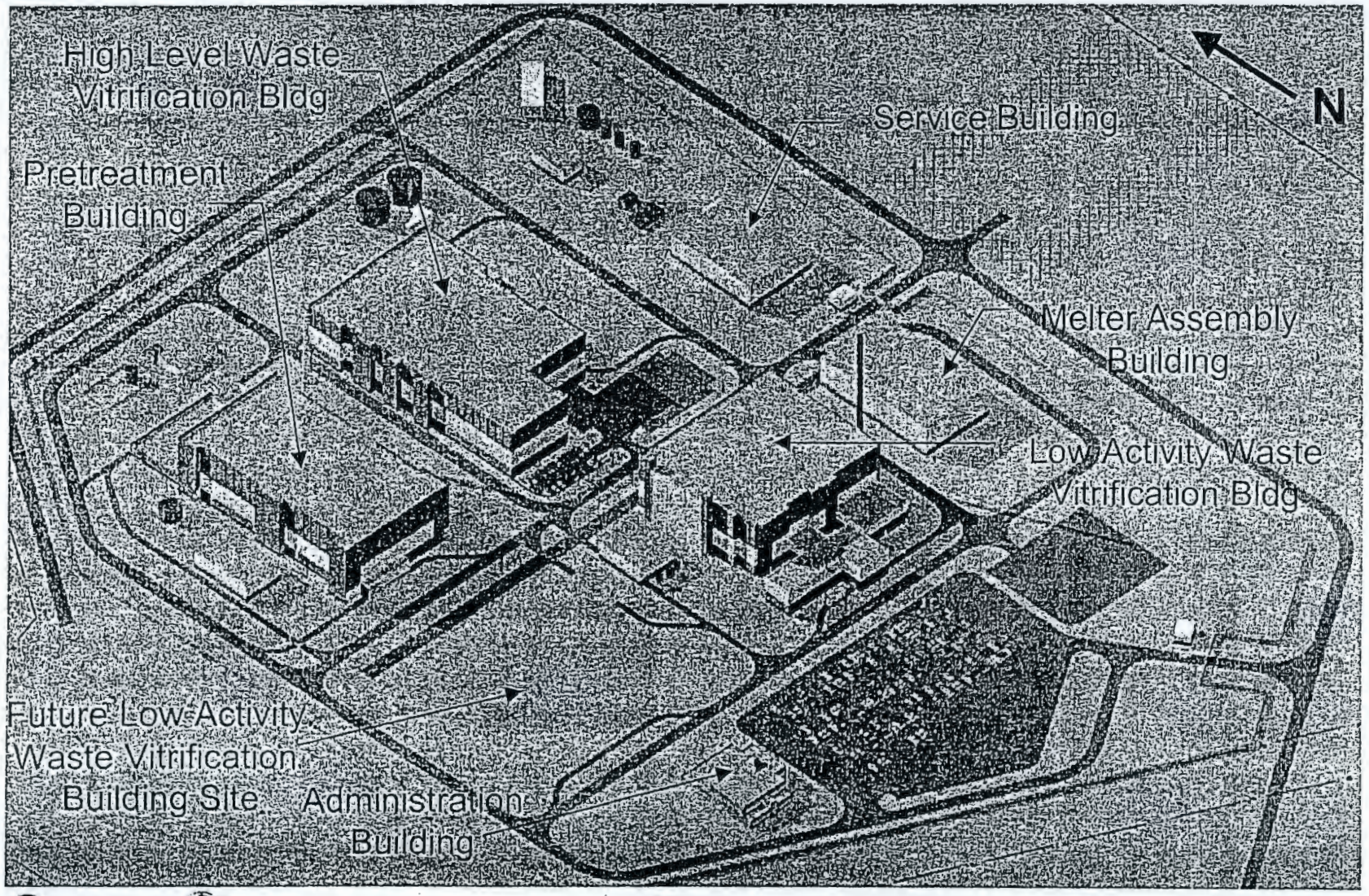

BNFL Inc.
River Protection Project
Waste Treatment Plant
DURATEK
SAIC

LAW Pilot Melter

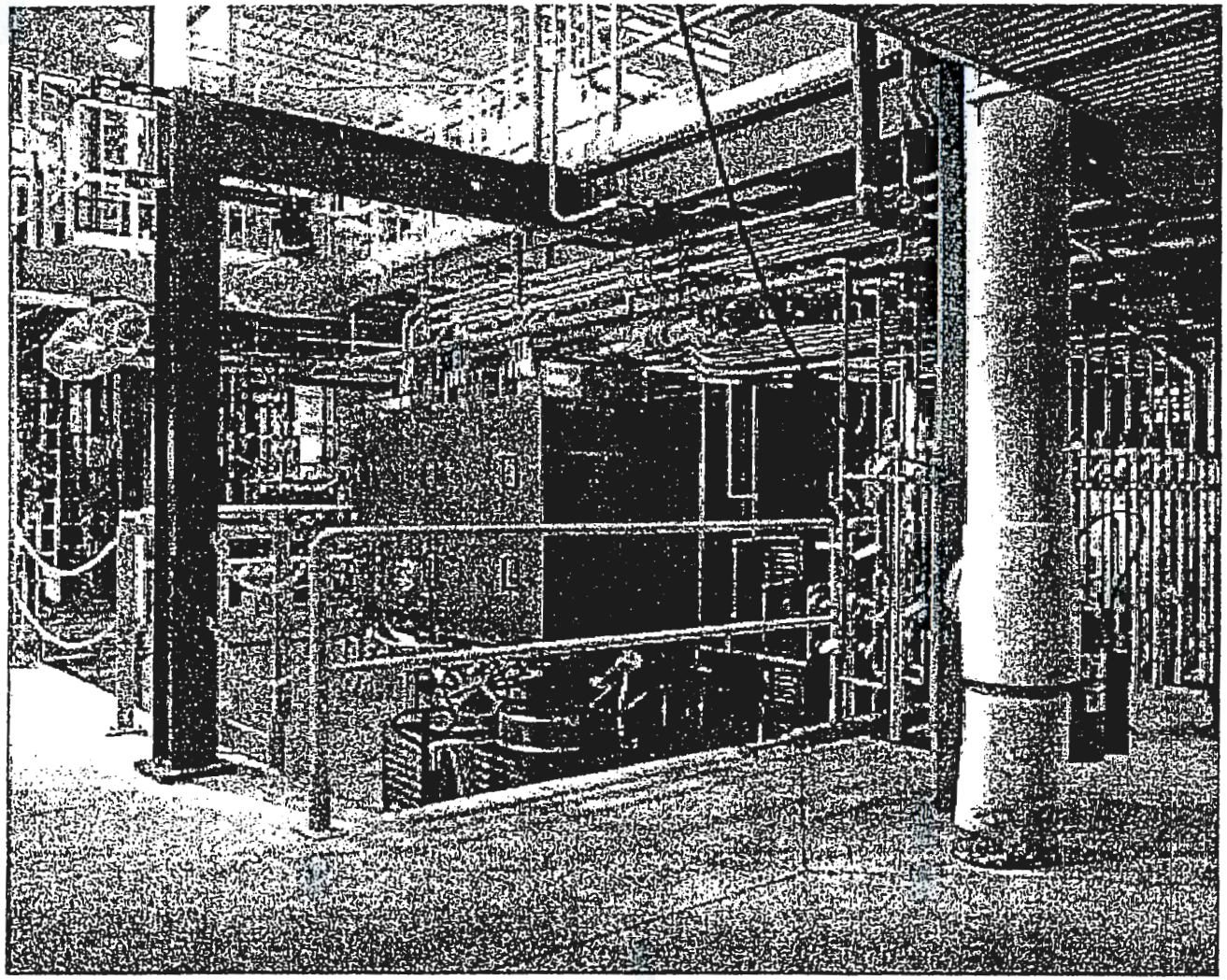

Key Technical Risks

Risk	Issue	Progress
LAW/HLW Melter	Throughput and Life	Pilot Melter Confirms Design Basis
Waste Form	Meeting Product Specification	Compliance Strategies with ORP Supporting Data Being Assembled
Envelope C Treatment (Sr/TRU Removal)	Flowsheet Problem	Modified Flowsheet Confirmed by Active Testing
Ultrafiltration	Characterization Uncertain	Active and Pilot Scale Work Confirms Design Basis
IX Performance	Use of New Exchanger	Active and Pilot Scale Work Confirms Design Basis
Sulfate Removal	Limit LAW Life	Incorporation

The Dangerous Waste Permit Application

- A modification to the Hanford Site-Wide Permit
- DWPA - What you'll find
- Content and Layout
- Major Factors
- Access and Availability
- Public Involvement Schedule

DWPA - What You'll Find

- Facility Description and General Provisions
- Waste Analysis
- Process Information
- Releases from SWMUs
- Contingency Plan
- Personnel Training
- Closure
- Reporting and Recordkeeping
- Other Federal and State Laws
- Certification
- Risk Assessment Work Plan

Major Factors

- Process Information
- Waste Analysis
- Contingency Plan
- Risk Assessment Work Plan

Public Involvement Schedule

• Pre-submittal Public Meeting	2/22/00
• DWPA Submitted	4/28/00
• DWPA 60-Day Public Comment Period	4/28/00-6/30/00
• DWPA Public Hearing (exact date TBD)	6/00
• Comment Resolution/Draft DWP	8/00-4/01
• Draft DWP 45-Day Public Comment Period	4/01-6/01
• Ecology Approve Permit Modification	6/01-9/01

Access and Availability

- On Ecology's Web Site
  - Linked to BNFL Inc.'s Web Site (www.bnflinchanford.com)
- Public Information Centers
  - Portland State University, Portland OR
  - U.S. DOE Reading Room, Richland WA
  - Gonzaga University, Spokane WA
  - Richland Public Library, Richland WA
  - University of Washington, Seattle WA

Supplement 12

Supplement 12
State Environmental Policy Act Environmental Checklist for the River Protection Project – Waste Treatment Plan

BNFL Inc.

Document title: **State Environmental Policy Act Environmental Checklist for the River Protection Project - Waste Treatment Plant**

Contract number:	DE-AC06-96RL13308
Department:	Environmental, Safety and Health Programs
Author(s):	John Sipkowski
Principal Author Signature	
Document Number:	RPT-W375-EN00014, Rev 1
Checked by:	Jeffrey Markillie, REM
Principal Checker Signature	
Date of issue:	28 April 2000
Issue status:	Approved
Approved by:	O. Lee Bostic, PE
Approver's position:	Manager, Environmental Safety

Approver's signature

BNFL Inc.
River Protection Project –
Waste Treatment Plant
3000 George Washington Way
Richland, WA 99352
United States of America
Tel: 509 371 3500
Fax: 509 371 3504

Circulation List

Purpose of issue: 1 For comment
2 For action
3 For information

Name	Location	No of copies	Remarks	Purpose of issue
L. Bostic	ETC-1, P123	1		3
A. Dobson	MPF, A117	1		3
G. Voyles	MPF, B105	1		3

History Sheet

Rev	Date	Reason for revision	Revised by
A	23 March 2000	Draft	John Sipkowski
0	31 March 2000	Approved	John Sipkowski
1	28 April 2000	Approved	John Sipkowski

Contents

Item — Page Number

A. BACKGROUND 1

B. ENVIRONMENTAL ELEMENTS 4

1. Earth 4
2. Air 7
3. Water 9
4. Plants 12
5. Animals 14
6. Energy and Natural Resources 15
7. Environmental Health 16
8. Land and Shoreline Use 18
9. Housing 20
10. Aesthetics 20
11. Light and Glare 21
12. Recreation 21
13. Historic and Cultural Preservation 22
14. Transportation 22
15. Public Services 23
16. Utilities 24

References 25

Acronyms and Abbreviations

CFR	Code of Federal Regulations
DOE	U.S. Department of Energy
DOE-RL	U.S. Department of Energy, Richland Operations Office
EIS	environmental impact statement
EPA	U.S. Environmental Protection Agency
HLW	high-level waste
LAW	low-activity waste
NEPA	National Environmental Policy Act of 1969
RPP-WTP	River Protection Project-Waste Treatment Plant
SEPA	State Environmental Policy Act
TWRS	tank waste remediation system
WAC	Washington Administrative Code

A. BACKGROUND

1. Name of proposed project, if applicable:

The River Protection Project-Waste Treatment Plant (RPP-WTP).

2. Name of applicants:

U.S. Department of Energy, Richland Operations Office and BNFL Inc.

3. Address and phone number of applicants and contact persons:

U.S. Department of Energy
Richland Operations Office
P.O. Box 550
Richland, Washington 99352

BNFL Inc.
3000 George Washington Way
Richland, Washington 99352

Contact:

Mr. S. H. Wisness, Director
Office of Site Services
(509) 373-9337

Mr. Maurice J. Bullock
BNFL Inc. Vice President
(509) 371-3500

4. Date checklist prepared:

March 2000

5. Agency requesting the checklist:

Washington State Department of Ecology
Nuclear Waste Program
1315 West 4th Avenue
Kennewick, Washington 99336

6. Proposed timing or schedule (including phasing, if applicable):

Construction is scheduled to begin in June of 2001, and operation is scheduled to begin December of 2005.

7. Do you have any plans for future additions, expansion, or further activity related to or connected with this proposal? If yes, explain.

The RPP-WTP will be constructed to treat approximately 10 % of the Hanford tank waste, or approximately 830,000 cubic feet per year of mixed waste. Future contract negotiations with the Department of Energy (DOE) could result in the need for modification or expansion of treatment or storage capacities in the facility.

8. List any environmental information you know about that has been prepared, or will be prepared, directly related to this proposal.

The RPP-WTP was included in the *Tank Waste Remediation System, Hanford Site, Richland, Washington, Final Environmental Impact Statement* (DOE 1996) and the *Tank Waste Remediation System (TWRS) Record of Decision (ROD)*(DOE 1997), which was jointly issued by the DOE and the Washington State Department of Ecology (Ecology) to fulfill the environmental review requirements of the *National Environmental Policy Act of 1969* (NEPA) and the *State Environmental Policy Act of 1971* (SEPA). In addition, the supplement analysis for TWRS (DOE 1998) and the Mitigation Action Plan for Phase I Privatization Facilities (DOE-RL 1998) were approved by DOE.

The RPP-WTP Part B Dangerous Waste Permit Application (BNFL 2000) will be submitted along with the required air permit applications, septic system permit application, and other required permit applications in support of the construction, operation, and closure of this facility will be submitted.

9. Do you know whether applications are pending for government approvals of other proposals directly affecting the property covered by your proposal? If yes, explain.

No known applications are pending for government approvals of other proposals directly affecting the proposed property.

10. List any government approvals or permits that will be needed for your proposal, if known.

The Washington State Department of Ecology (Ecology) is the lead agency authorized to approve the dangerous waste permit application Part A, Form 3, and Part B for the RPP-WTP pursuant to the requirements of *Washington Administrative Code* (WAC), WAC 173-303-806, and U.S. Environmental Protection Agency (EPA) *Code of Federal Regulations,* 40 CFR 270.

Emissions from the RPP-WTP will be permitted under the State of Washington Department of Ecology Air Permit Regulations, WAC 173-400, 173-401, 173-460, and 173-480; the State of Washington Department of Health radioactive air emissions licensing, WAC 246-247; and 40 CFR 52.21 and 40 CFR 61.

Industrial waste water discharges, including the water generated from construction testing and storm water, will be permitted under the *Water Quality Standards for Ground Waters of the State of Washington*, WAC-173-200, and *State Waste Discharge Permit Program*, WAC 173-216, as appropriate. Discharges from the sanitary sewer system will be permitted according to the *On-Site Sewage Systems*, WAC 246-272, requirements.

The DOE Regulatory Unit is responsible for oversight of nuclear and process safety for the RPP-WTP. To implement that responsibility, the DOE Regulatory Unit will review and approve the authorization basis prepared by BNFL Inc. as required for design, construction, and operation of the RPP-WTP.

11. Give brief, complete description of your proposal, including the proposed uses and the size of the project and site. There are several questions later in this checklist that ask you to describe certain aspects of your proposal. You do not need to repeat those answers on this page.

The RPP-WTP is proposed as a dedicated waste treatment and storage facility that will receive a mixed waste stream from Hanford's double-shell and single-shell tank farm systems. The waste will contain organic, inorganic, and radionuclide constituents. The facility will provide capabilities for vitrification treatment of low-activity waste (LAW) feed and high-level waste (HLW) feed. These feeds are subsets of high-level waste which is defined in 10 CFR 72.3.

The feed treated in the LAW feed treatment process will primarily be the liquid supernatant portion of waste, with minor volumes of entrained solids, which is stored in the tank systems at the Hanford Site. The HLW feed treatment process will allow for the treatment of waste with a higher solids content. It is estimated that the amount of mixed waste to be treated in the RPP-WTP will be 830,000 cubic feet per year.

12. Location of the proposal. Give sufficient information for a person to understand the precise location of your proposed project, including a street address, if any, and section, township, and range, if known. If a proposal would occur over a range of area, provide the range or boundaries of the site(s). Provide a legal description, site plan, vicinity map, and topographic map, if reasonably available. While you should submit any plans required by the agency, you are not required to duplicate maps or detailed plans submitted with any permit applications related to this checklist.

The RPP-WTP will be located in the 200 East Area of the Hanford Site, Benton County, Washington, on the Gable Butte, Washington, 7.5 minute quadrangle topographic map in Section 3, T12N, R26E of the Willamette Base and Meridian. This location is in agreement with the comprehensive land use plan (DOE 1999a).

The RPP-WTP Dangerous Waste Permit Application (BNFL Inc. 2000) provides a small-scale map depicting the Hanford Site and the location of the RPP-WTP in Chapter 2, and a topographic map in Appendix 2A.

TO BE COMPLETED BY APPLICANT

EVALUATIONS FOR AGENCY USE ONLY

B. ENVIRONMENTAL ELEMENTS

1. Earth

a. General description of the site (circle one): Flat, rolling, hilly, steep slopes, mountainous, other _____.

The site is flat.

b. What is the steepest slope on the site (approximate percent slope)?

The approximate slope of the land is less than 2 %.

c. What general types of soils are found on the site (for example, clay, sandy gravel, peat, muck)? If you know the classification of agricultural soils, specify them and note any prime farmland.

Soil types for the 200 Areas of the Hanford Site are described in Volume I of the TWRS final Environmental Impact Statement (EIS), Section 4.1.4 (DOE 1996). In general, soil types in the 200 Areas and around the RPP-WTP consist mainly of eolian and fluvial sands, and gravel. More detailed information concerning specific soil classifications can be found in *Hanford Site National Environmental Policy Act (NEPA) Characterization* (PNNL 1998a). Farming is presently not permitted on the Hanford Site. The general area surrounding the Hanford Site 200 Areas was not farmed prior to construction of the Hanford facilities.

d. Are there surface indications or history of unstable soils in the immediate vicinity? If so, describe.

No. The proposed RPP-WTP site is not located in an area of slope or soil instability, or in an area affected by unstable slope or soil conditions.

TO BE COMPLETED BY APPLICANT

EVALUATIONS FOR AGENCY USE ONLY

e. Describe the purpose, type, and approximate quantities of any filling or grading proposed. Indicate source of fill.

Clearing and grading of land is the first activity in the sequence of construction and facility startup. Approximately 350,000 cubic yards of earth work is planned. Clearing and grading will be followed by excavation, compaction and then facility construction.

An area below the grade slab will be fine graded. Aggregate and fill for fine grading will be brought from quarry sites and borrow pits on or near the Hanford Site. Contaminated materials will not be used for fill.

f. Could erosion occur as a result of clearing, construction, or use? If so, generally describe.

Yes. During construction following initial disturbances and before revegetation, wind and storm water runoff erosion is possible. These conditions should be present only for a relatively short period of time. Land used only for construction purposes will either remain covered with aggregate or be restored to original condition after construction and returned to DOE for revegetation. Due to the possibility of redisturbance for future work, reseeding of construction laydown areas and other portions of the site will use the appropriate standard Washington State Department of Transportation seed mix for revegetation in this climate consistent with the TWRS Mitigation Action Plan (DOE-RL 1998). Infrastructure construction, such as transmission corridors, will be reseeded using a native grass and sagebrush seed mix.

A sizable portion of the RPP-WTP site, and also of nearby land, has been previously disturbed. Disturbance in the surrounding areas includes the construction of roads, processing facilities, pipelines, and other facilities and infrastructure associated with the production of plutonium and waste management. The impact from BNFL Inc.'s grading activities on surface or near surface geologic features will be confined to small, localized topographic changes where facilities are constructed.

TO BE COMPLETED BY APPLICANT

EVALUATIONS FOR AGENCY USE ONLY

g. About what percent of the site will be covered with impervious surfaces after project construction (for example, asphalt or buildings)?

DOE is providing a total of approximately 119.2 acres of land for the construction of the RPP-WTP . Approximately 64 acres will be occupied by the operational RPP-WTP and potentially covered with an impervious surface. Approximately 4.2 acres will be used for septic leach fields which will be allowed to revegetate naturally. The remaining 51 acres will be used temporarily during construction for workforce parking, lay down area, and stockpiling. With completion of construction, the temporary area will either remain covered with aggregate or be demobilized and returned to DOE for revegetation. Small portions of the construction area may be covered with concrete and/or asphalt to provide material storage and temporary construction offices. These concrete and/or asphalt areas will remain upon completion of construction.

h. Proposed measures to reduce or control erosion, or other impacts to the earth, if any:

Gravel and dust suppression techniques (for example, watering and the application of degradable soil fixatives) will be used to reduce or control erosion in the construction area. Land used only for construction purposes will either remain covered with aggregate or be restored to original condition and revegetated after construction. Due to the possibility of redisturbance for future work, reseeding of construction laydown areas will use the appropriate standard Washington State Department of Transportation seed mix for revegetation in this climate consistent with the TWRS Mitigation Action Plan (DOE-RL 1998).

TO BE COMPLETED BY APPLICANT

EVALUATIONS FOR AGENCY USE ONLY

2. Air

a. What types of emissions to the air would result from the proposal (i.e., dust, automobile, odors, industrial wood smoke) during construction and when the project is completed? If any, generally describe and give approximate quantities, if known.

Air emissions as a result of construction activities are estimated to be:

Criteria pollutants	Emissions in grams/second
Sulfur oxides	0.19
Nitrogen oxides	8.6
Carbon monoxide	46
PM-10	6.8

Hazardous pollutants	Emissions in grams/second
Formaldehyde	3.5×10^{-5}

Air emissions from plant operations, excluding steam boilers, are estimated to be:

Criteria pollutants	Emissions in grams/second
Sulfur oxides	2.6×10^{-3}
Nitrogen oxides	0.61
Carbon monoxide	0.01
PM-10	6.87×10^{-4}

Hazardous pollutants	Emissions in grams/second
Chromium compounds	2.3×10^{-9}
Manganese compounds	2.3×10^{-9}
Nickel compounds	2.3×10^{-9}
Fluoride as HF	2.3×10^{-9}
Nitric acid	0
Ammonia	7.88×10^{-2}
Hydrogen chloride	0

Radionuclides	Emissions in Curie/year
Americium-241	1.7×10^{-7}
Carbon-14	7.11
Cesium-137	6.0×10^{-2}
Iodine-129	0.121
Plutonium-239	3.65×10^{-7}
Strontium-90	1.12×10^{-3}
Technetium	3.27×10^{-4}

TO BE COMPLETED BY APPLICANT | **EVALUATIONS FOR AGENCY USE ONLY**

Air emissions from steam boilers are estimated to be:

Criteria pollutants	Emissions in pounds/hour
SO_2	5.47
SO_3	0.107
NO_x	15.3
CO	3.86
PM	1.5
VOC	0.215

These emission estimates will be verified as the design progresses. Emissions from the treatment facility will be regulated under the appropriate permits as presented in section A.10.

b. Are there any off-site sources of emissions or odors that may affect your proposal? If so, generally describe.

No.

c. Proposed measures to reduce or control emissions or other impacts to the air, if any?

Dust control measures will be applied during construction to reduce fugitive dust emissions. These measures may include watering or application of dust control chemicals, as well as temporary seeding and revegatation. The primary and secondary off-gas controls specified for the RPP-WTP designs are expected to result in emissions that would be substantially below both federal and state standards in all areas open to the public. Commercially available treatment systems will treat the steam boiler and standby generator emissions to levels compliant with applicable standards.

In addition, good engineering practices will be followed, and actions would comply with procedures designed to protect human health and the environment. Administrative control practices will limit air emissions and protect worker health.

TO BE COMPLETED BY APPLICANT

EVALUATIONS FOR AGENCY USE ONLY

3. Water

a. Surface

1) Is there any surface water body on or in the immediate vicinity of the site (including year-round and seasonal streams, saltwater, lakes, ponds, wetlands)? If yes, describe type and provide names. If appropriate, state what stream or river it flows into.

There is no surface water body on or in the immediate vicinity of the RPP-WTP. Two ephemeral creeks traverse through the Hanford Site: Cold Creek and Dry Creek. Cold Creek is located approximately 7 miles west southwest of the RPP-WTP. Dry Creek is located approximately 10 miles west southwest of the RPP-WTP. These creeks flow only during and shortly after rainfall and snowmelt. No perennial streams originate within the Pasco Basin. Primary surface water features associated with the Hanford Site are the Columbia River and Yakima River. West Lake, approximately 10 acres in size and less than 3 ft deep, is the only natural lake within the Hanford Site. Waste water ponds, cribs, and ditches associated with nuclear fuel reprocessing and waste disposal activities also are present on the Hanford Site.

2) Will the project require any work over, in, or adjacent to (within 200 feet) the described waters? If yes, please describe and attach available plans.

No.

3) Estimate the amount of fill and dredge material that would be placed in or removed from surface water or wetlands and indicate the area of the site that would be affected. Indicate the source of fill material.

None. There would be no dredging or filling from or to surface water or wetlands.

TO BE COMPLETED BY APPLICANT

EVALUATIONS FOR AGENCY USE ONLY

4) **Will the proposal require surface water withdrawals or diversions? Give general description, purpose, and approximate quantities if known.**

The water supply for the 200 Areas is pumped from the Columbia River. DOE will provide the RPP-WTP with raw water at approximately 495 gallons per minute, based on an annual average. The water will primarily be used in cooling towers and will also be used for reagent make-up and plant and equipment wash down.

5) **Does the proposal lie within a 100-year floodplain? If so, note location on the site plan.**

The RPP-WTP is not within the 100 floodplain.

6) **Does the proposal involve any discharges of waste materials to surface waters? If so, describe the type of waste and anticipated volume of discharge.**

No.

b. **Ground**

1) **Will ground water be withdrawn, or will water be discharged to ground water? Give general description, purpose, and approximate quantities if known.**

No groundwater will be withdrawn in support of the project, nor will water be discharged directly to the aquifer from the RPP-WTP. Liquids may be transferred to other permitted facilities (for example, Effluent Treatment Facility and Treated Effluent Disposal Facility) that will treat effluent prior to discharge to the ground. The depth to groundwater at the RPP-WTP is over 260 ft. Sanitary sewage will be discharged to permitted leach fields.

TO BE COMPLETED BY APPLICANT

EVALUATIONS FOR AGENCY USE ONLY

2) **Describe waste material that will be discharged into the ground from septic tanks or other sources, if any (for example: Domestic sewage; industrial, containing the following chemicals... agricultural; etc.). Describe the general size of the system, the number of such systems, the number of houses to be served (if applicable), or the number of animals or humans the system(s) are expected to serve.**

During construction, BNFL Inc. plans to dispose of approximately 37,500 gallons per day of sanitary waste in onsite septic leach fields based on a construction work force of 2500. During operations, 17,500 gallons per day of sanitary waste will be discharged to septic leach fields from an operational work force of 700. Under normal and abnormal operating conditions, BNFL Inc. will discharge all liquid effluents (other than sanitary waste) to permitted Hanford Site facilities.

c. **Water Run-off (including storm water)**

1) **Describe the source of run-off (including storm water) and method of collection and disposal, if any (include quantities, if known). Where will this water flow? Will this water flow into other waters? If so, describe.**

The Hanford Site on average receives only 6 to 7 inches of annual precipitation. The primary source of run-off associated with this project will be storm water from the buildings, paved areas, and other impervious surfaces of the plant. The light and infrequent nature of precipitation at the site will produce correspondingly light run-off from the impervious surfaces. The precipitation would not come into contact with any of the mixed waste being stored in the facility. Storm water will be managed in accordance with an approved permit as presented in section A.10.

TO BE COMPLETED BY APPLICANT

EVALUATIONS FOR AGENCY USE ONLY

2) Could waste materials enter ground or surface waters? If so, generally describe.

Waste materials will not enter ground or surface waters. Waste materials will be primarily contained in buildings with roofs to prevent contact with storm water and ground or surface water. There will be three tanks containing waste that will be located outside of buildings. These tanks will have secondary containment with protective coating to prevent waste from entering ground or surface waters.

d. Proposed measures to reduce or control surface, ground, and run-off water impacts, if any:

No surface, ground, or run-off water impacts are expected.

4. Plants

a. Check or circle the types of vegetation found on the site.

___ **deciduous tree: alder, maple, aspen, other**
___ **evergreen tree: fir, cedar, pine, other**
X **shrubs**
X **grass**
___ **pasture**
___ **crop or grain**
___ **wet soil plants: cattail, buttercup, bulrush, skunk cabbage, other**
___ **water plants: water lily, eelgrass, milfoil, other**
X **other types of vegetation**

The most common native vegetation community in the vicinity of the RPP-WTP is the sagebrush/bunch grass community. Numerous species of sage brush and a variety of bunch grass species are found on the Hanford Site. Disturbed areas are commonly populated by cheat grass, *Bromus tectorum*.

b. What kind and amount of vegetation will be removed or altered?

Section 4.4 in Volume I of the TWRS EIS (DOE 1996) describes the vegetation in the vicinity

TO BE COMPLETED BY APPLICANT | **EVALUATIONS FOR AGENCY USE ONLY**

of the RPP-WTP. Acreage taken by BNFL Inc. activities is inside the portion of the Hanford Site dedicated to long-term waste management under the *Hanford Comprehensive Land-Use Plan Environmental Impact Statement* (DOE 1999a). Substantial portions of the 119.2-acre site have been previously disturbed by clearing, grading, or other activities and are poor-quality habitat. Nevertheless, BNFL Inc.'s clearing and grading will remove/alter shrub-steppe vegetation and habitat.

The supplement analysis (DOE 1998) states that 37 acres in the area of the proposed site have previously been disturbed. The TWRS EIS assumes that 62 % of the area that would be used for construction and operation for the RPP-WTP would disturb previously undisturbed shrub-steppe habitat. Based on the current 119.2 acres requested (64 acres for operations, 4.2 acres for septic leach fields, and 51 acres for construction) and the information in the supplement analysis (DOE 1998), it is estimated that 51 acres (119.2-37=82.2; 0.62x82.2= approximately 51 acres) of previously undisturbed land will be taken. Plant species likely taken would include big sagebrush and gray rabbit brush, dominant species in the Hanford Site shrub-steppe habitat. While not known to exist on the RPP-WTP site, potentially affected species of concern that could be present, according to the TWRS EIS Volume I, Section 4.4.2 (DOE 1996), include crouching milkvetch, stalk-pod milkvetch, scilla onion, and Piper's daisy.

c. List threatened or endangered species known to be on or near the site.

None. No federally listed threatened or endangered plant or animal species are known to occur on or near the Central Plateau, where the RPP-WTP site is located. Additional information is provided in Volume I of the TWRS EIS, Sections 4.4.4 and 4.4.5 (DOE 1996).

The Hanford Site contains some federally and state-listed threatened and endangered plant and animal species. Additional information on species can be found in *Hanford Site National Environmental Policy Act (NEPA) Characterization* (PNNL 1998a).

TO BE COMPLETED BY APPLICANT

EVALUATIONS FOR AGENCY USE ONLY

d. Proposed landscaping, use of native plants, or other measures to preserve or enhance vegetation on the site, if any:

The DOE has committed to compensate for biological and natural resource disturbance caused by construction activities of the RPP-WTP at an appropriate site to be determined by the DOE. Furthermore, due to the possibility of redisturbance for future work, reseeding of construction lay down areas and other portions of the site will use the appropriate standard Washington State Department of Transportation seed mix for revegetation in this climate. Additional information is provided in Volume I of the TWRS EIS, Section 5.20 (DOE 1996), and the Mitigation Action Plan for Phase I privatization facilities (DOE-RL 1998).

5. Animals

a. Indicate (by underlining) any birds and animals which have been observed on or near the site or are known to be on or near the site.

The following (as indicated by underlining) have been observed on or near the site or are known to be on or near the site:

birds:	**hawk**, heron, eagle, **songbirds**, **other**
mammals:	**deer**, bear, elk, beaver, **other**
fish:	bass, salmon, trout, herring, shellfish, other

Raptors (i.e., burrowing owls, ferruginous, redtail, and Swainson's hawks) are seen occasionally in the 200 East Area. Small passerines (for example, sparrows, finches) also are present in the general vicinity of the RPP-WTP. Two Washington State candidate bird species were observed in the vicinity during the performance of a biological review of the proposed location of the RPP-WTP: the loggerhead shrike (*Lanius ludovicianus*) and the sage sparrow (*Amphispiza belli*) (PNNL 1998a). Mule deer, rabbits, badgers, and coyotes occasionally are seen in the general area. Additional information is provided in Volume I of the TWRS EIS, Sections 4.4.3, and 4.4.5 (DOE 1996).

TO BE COMPLETED BY APPLICANT

EVALUATIONS FOR AGENCY USE ONLY

b. List any threatened or endangered species known to be on or near the site.

Two federally and state-listed threatened or endangered species have been identified on the 560 square mile Hanford Site along the Columbia River: the bald eagle and peregrine falcon. In addition, the state-listed white pelican, sandhill crane, and ferruginous hawk also occur on or migrate through the Hanford Site. Of these five species, only the ferruginous hawks have been seen on occasion in the general area. These hawks have not been observed to use the habitat in the vicinity of the RPP-WTP for perching, hunting, or nesting. Additional information is provided in Volume I of the TWRS EIS, Section 4.4.5 (DOE 1996). The sage sparrow (*Amphispiza belli*) and the loggerhead shrike (*Lanius ludovicianus*), two Washington State Candidate bird species, were observed in the vicinity of the proposed location of the RPP-WTP.

c. Is the site part of a migration route? If so, explain.

The Hanford Site is a part of the broad Pacific Flyway.

d. Proposed measures to preserve or enhance wildlife, if any:

Specific measures to preserve or enhance wildlife are discussed in Section 5.20 of Volume I of the TWRS EIS (DOE 1996) and the mitigation action plan for Phase I privatization facilities (DOE-RL 1998) for mitigation measures.

6. Energy and Natural Resources

a. What kinds of energy (electric, natural gas, oil, wood stove, solar) will be used to meet the completed project's energy needs? Describe whether it will be used for heating, manufacturing, etc.

Electrical and oil energy will be used for heating and to support operation of the treatment facility.

TO BE COMPLETED BY APPLICANT

EVALUATIONS FOR AGENCY USE ONLY

b. **Would your project affect the potential use of solar energy by adjacent properties? If so, generally describe.**

No.

c. **What kinds of energy conservation features are included in the plans of this proposal? List other proposed measures to reduce or control energy impacts, if any:**

Recycling, conservation, and other engineering features will be used to limit the amount of energy used in the facility. Systems will be operated to use energy and resources in the most efficient manner possible.

7. Environmental Health

a. **Are there any environmental health hazards, including exposure to toxic chemicals, risk of fire and explosion, spill, or hazardous waste, that could occur as a result of this proposal? If so, describe.**

Possible environmental health hazards to workers could arise from activities at the RPP-WTP. The hazard could come from exposure to radioactive, dangerous, or mixed waste. Engineered barriers and administrative controls are employed to minimize the probability of even a minor incident and/or accident. A chemical spill, release, fire, or explosion could occur only as a result of a simultaneous breakdown in multiple barriers or a catastrophic natural forces event.

1) **Describe special emergency services that might be required.**

Special emergency services might be required for circumstances involving mixed waste incidents, such as spills, releases, fires, and explosions.

2) **Proposed measures to reduce or control environmental health hazards, if any:**

All personnel will be trained to follow proper procedures during the RPP-WTP

TO BE COMPLETED BY APPLICANT | **EVALUATIONS FOR AGENCY USE ONLY**

treatment and storage operations to minimize potential exposure. The RPP-WTP will have systems for air emission controls, radiation monitoring, fire protection, and alarm capability. The ventilation system will maintain a negative air pressure in operations buildings.

The RPP-WTP will have measures in place to reduce or control environmental health hazards. These measures will include containment structures and equipment, protective equipment and clothing, and operating procedures to ensure hazards are minimized. The physical security of a chain-link fence around the RPP-WTP and limited access to authorized personnel will further reduce potential exposures.

b. Noise

1) What type of noise exists in the area which may affect your project (for example: traffic, equipment, operation, other)?

The site is characterized by background noise from traffic and activities taking place in the 200 East Area. The project is not noise sensitive.

2) What types and levels of noise would be created by or associated with the project on a short-term or a long-term basis (for example: traffic, construction, operations, other)? Indicate what hours noise would come from the site.

During construction, noise impacts would largely result from noise generated by mechanized equipment such as loaders, bulldozers, cranes, and trucks. Noise levels from all mechanized equipment used during construction activities will be within the General Services Administration construction noise specifications or other similar noise standards (DOE 1996). Noise from construction activities will primarily be during daylight hours.

TO BE COMPLETED BY APPLICANT

EVALUATIONS FOR AGENCY USE ONLY

Because the waste treatment process equipment will be operating inside enclosed structures, exterior noise levels would not be substantially increased due to the RPP-WTP. Minor amounts of noise from traffic and equipment are expected during day-shift hours during operations. For additional information, refer to the TWRS EIS (DOE 1996).

3) Proposed measures to reduce or control noise impacts, if any:

If Occupational Safety and Health Administration noise standards were to be exceeded, appropriate measures to protect workers would be employed.

8. Land and Shoreline Use

a. What is the current use of the site and adjacent properties?

The site consists of disturbed and undisturbed sagebrush. The subject site is adjacent to the 241-AP Tank Farm and generally flat, with a spoils pile near the center. The spoils pile is soil from the construction of the adjacent grout vaults.

b. Has the site been used for agriculture? If so, describe.

No portion of the 200 Areas has been used for agricultural purposes since 1943, if ever.

c. Describe any structures on the site.

There are no structures currently on the site.

d. Will any structures be demolished? If so, what?

No structures are to be demolished.

e. What is the current zoning classification of the site?

The Hanford Site is zoned as an Unclassified Use district by Benton County, Washington.

TO BE COMPLETED BY APPLICANT

EVALUATIONS FOR AGENCY USE ONLY

f. What is the current comprehensive plan designation of the site?

The *Record of Decision: Hanford Comprehensive Land-Use Environmental Impact Statement* (DOE 1996b) designated the 200 Area as "Industrial Exclusive" dedicated to nuclear waste management activities.

g. If applicable, what is the current shoreline master program designation of the site?

Does not apply.

h. Has any part of the site been classified as an "environmentally sensitive" area? If so, specify.

No part of the RPP-WTP site has been classified as an "environmentally sensitive" area. The 200 Areas, in particular, are located in a previously disturbed industrial area with little or no environmental significance. There will be an environmental impact to the shrub steppe habitat from construction activities. Mitigation will be performed in accordance with the Mitigation Action Plan (DOE-RL 1998) developed by DOE in accordance with department policy. Additional information is provided in Volume I of the TWRS EIS, Section 4.0 (DOE 1996).

i. Approximately how many people would reside or work in the completed project?

Employment during peak construction will be approximately 2,500 full-time equivalents on-site. About 500 additional personnel (for example, engineers, designers, managers, and support personnel) will be located in office facilities in the Tri-Cities area. About 100 of these workers located in the Tri-Cities area can be expected to be present at the RPP-WTP site on a given day. Approximately 700 onsite workers are expected during operations.

j. Approximately how many people would the completed project displace?

None. Refer to Volume I of the TWRS EIS, Section 5.6.1, for additional information (DOE 1996).

TO BE COMPLETED BY APPLICANT

EVALUATIONS FOR AGENCY USE ONLY

k. Proposed measures to avoid or reduce displacement impacts, if any:

Does not apply.

l. Proposed measures to ensure the proposal is compatible with existing and project land uses and plans, if any:

Does not apply.

9. Housing

a. Approximately how many units would be provided, if any? Indicate whether high, middle, or low-income housing.

None. Refer to Volume I of the TWRS EIS, Section 5.6.2, for additional information (DOE 1996).

b. Approximately how many units, if any, would be eliminated? Indicate whether high, middle, or low-income housing.

None.

c. Proposed measures to reduce or control housing impacts, if any:

Does not apply.

10. Aesthetics

a. What is the tallest height of any proposed structure(s), not including antennas; what is the principal exterior building material(s) proposed?

The tallest building of the RPP-WTP will be approximately 140 feet above grade and the tallest stack will be approximately 195 feet. The principal exterior building material will be sheet metal.

b. What views in the immediate vicinity would be altered or obstructed?

None.

TO BE COMPLETED BY APPLICANT

EVALUATIONS FOR AGENCY USE ONLY

c. Proposed measures to reduce or control aesthetic impacts, if any:

None. Refer to Volume I of the TWRS EIS, Section 5.20, for additional information (DOE 1996).

11. Light and Glare

a. What type of light or glare will the proposal produce? What time of day would it mainly occur?

Lighting will be provided for the proposed site during construction and operations during the day and night.

b. Could light or glare from the finished project be a safety hazard or interfere with views?

No.

c. What existing off-site sources of light or glare may affect your proposal?

None.

d. Proposed measures to reduce or control light and glare impacts, if any:

None.

12. Recreation

a. What designated and informal recreational opportunities are in the imrnediate vicinity?

None.

b. Would the proposed project displace any existing recreational uses? If so, describe.

No.

c. Proposed measures to reduce or control impacts on recreation, including recreation opportunities to be provided by the project or applicant, if any?

None.

TO BE COMPLETED BY APPLICANT

EVALUATIONS FOR AGENCY USE ONLY

13. Historic and Cultural Preservation

a. Are there any places or objects listed on, or proposed for, national, state, or local preservation registers known to be on or next to the site? Is so, generally describe.

No places or objects listed on or proposed for national, state, or local preservation registers are known to be on or adjacent to the RPP-WTP. Refer to Volume I of the TWRS EIS, Section 5.5, for additional information (DOE 1996).

b. Generally describe any landmarks or evidence of historic, archaeological, scientific, or cultural importance known to be on or next to the site.

There are no known landmarks or evidence of historic, archaeological, scientific, or cultural importance at the RPP-WTP site (PNNL 1998b).

c. Proposed measures to reduce or control impacts, if any:

Does not apply.

14. Transportation

a. Identify public streets and highways serving the site, and describe proposed access to the existing street system. Show on site plans, if any.

Access to the site is via DOE-provided highways and roads. There will be no public access to the RPP-WTP. A small-scale map provided in Chapter 2 of the RPP-WTP Dangerous Waste Permit Application (BNFL 2000) depicting the Hanford Site and the location of the RPP-WTP identifies public streets and highways serving the site

b. Is site currently served by public transit? If not, what is the approximate distance to the nearest transit stop?

The RPP-WTP will not be accessible to the public and will not be served by public transit. The nearest public transit stop is approximately 20 miles from the RPP-WTP.

TO BE COMPLETED BY APPLICANT

EVALUATIONS FOR AGENCY USE ONLY

c. **How many parking spaces would the completed project have? How many would the project eliminate?**

The RPP-WTP will provide 320 parking spaces. Because the proposed site is currently undeveloped, no parking will be eliminated as a result of this project.

d. **Will the proposal require any new roads or streets, or improvements to existing roads or streets, not including driveways? If so, generally describe (indicate whether public or private).**

Yes. An access road will be constructed from Canton Avenue to the RPP-WTP site. The road will be accessible only to authorized personnel.

e. **Will the project use (or occur in the immediate vicinity of) water, rail, or air transportation? If so, generally describe.**

No.

f. **How many vehicular trips per day would be generated by the completed project? If known, indicate when peak volumes would occur.**

Refer to the Volume I of the TWRS EIS, Section 5.10, for this information (DOE 1996).

g. **Proposed measures to reduce or control transportation impacts, if any:**

Refer to the Volume I of the TWRS EIS, Section 5.20, for this information (DOE 1996).

15. Public Services

a. **Would the project result in an increased need for public services (for example: fire protection, police protection, health care, schools, other)? If so, generally describe.**

No. Refer to the Volume I of the TWRS EIS, Section 5.6.3, for additional information (DOE 1996).

TO BE COMPLETED BY APPLICANT

EVALUATIONS FOR AGENCY USE ONLY

b. Proposed measures to reduce or control direct impacts on public services, if any:

None.

16. Utilities

a. Circle utilities currently available at the site: electricity, natural gas, water, refuse service, telephone, sanitary sewer, septic system, other:

Electricity, potable water, steam, refuse service, telephone, and septic systems are currently not available at the site.

b. Describe the utilities that are proposed for the project, the utility providing the service, and the general construction activities on the site or in the immediate vicinity which might be needed.

The DOE will supply water and electricity to the RPP-WTP. The water will come to the facility from extensions of the 200 Areas potable and raw water systems. The water system extensions will proceed east to the RPP-WTP from existing pipelines in the vicinity of Canton Street in the 200 East Area.

The electricity will come to the RPP-WTP from a new substation built by the DOE to support privatization. The substation has a capacity of 62.5 Megawatts.

Oil storage may be added as part of the project.

References

10 CFR 72.3. *Licensing Requirements for the Independent Storage of Spent Nuclear Fuel and High-Level Radioactive Waste*, as amended. Code of Federal Regulations.

40 CFR 52.21. *Prevention of Significant Deterioration of Air Quality*, as amended. Code of Federal Regulations.

40 CFR 61. *National Emission Standards for Hazardous Air Pollutants*, as amended. Code of Federal Regulations.

40 CFR 270. *EPA Administered Permit Programs: The Hazardous Waste Permit Program*, as amended. Code of Federal Regulations.

BNFL. 2000. *River Protection Project – Waste Treatment Plant Dangerous Waste Permit Application*, BNFL-5193-RCRA-01, Revision 0. 31 March 2000. BNFL Inc., Richland, Washington, USA.

DOE. 1988. *Site Characterization Plan Reference Repository Location, Hanford Site, Washington, Consultation Draft*, DOE/RW-164, Volume 1, January 1988. US Department of Energy, Washington, D.C., USA.

DOE. 1996. *Tank Waste Remediation System, Hanford Site, Richland, Washington, Final Environmental Impact Statement*, DOE/EIS-0189, August 1996. US Department of Energy, Washington, D.C., USA.

DOE. 1997. *Tank Waste Remediation System (TWRS) Record of Decision (ROD)*, DOE/ROD-6450-01-P, August 1997. US Department of Energy, Washington, D.C., USA.

DOE. 1998. *Supplement Analysis for the Tank Waste Remediation System,* DOE/EIS-0189-SA2, May 1998. US Department of Energy, Washington, D.C., USA.

DOE. 1999a. *Hanford Comprehensive Land-Use Environmental Impact Statement*. DOE/EIS-0222-F, September 1999. US Department of Energy, Washington, D.C., USA.

DOE. 1999b. *Record of Decision: Hanford Comprehensive Land-Use Environmental Impact Statement*. Federal Register, Vol. 64, No. 218. 12 November 1999.

DOE-RL. 1993. *Hanford Facility Dangerous Waste Part A Permit Application*, Volumes 1 to 3, DOE/RL-88-21, April 1993, as amended. US Department of Energy, Richland Operations Office, Richland, Washington, USA.

DOE-RL. 1998. *Mitigation Action Plan for the U.S. Department of Energy, Hanford Site, Tank Waste Remediation System-Privatization, Phase I Facility Construction*, May 1998. US Department of Energy, Richland Operations Office, Richland, Washington, USA.

NEPA. 1969. *National Environmental Policy Act of 1969.* 42 United States Code 4321 et seq.

PNNL. 1998a. *Hanford Site National Environmental Policy Act (NEPA) Characterization*, PNL-6415, Revision 9. Pacific Northwest National Laboratory, Richland, Washington, USA.

PNNL. 1998b. Letter from Hale LL, PNNL to Kjarmo K, FDH, *Cultural Resources Review of the TWRS Mitigation Planning Support-Phase One Project, HCRC #98-0200-022,* May 22, 1998. Pacific Northwest National Laboratory, Richland, Washington, USA.

RCW. 43.21. *State Environmental Policy Act of 1971*, Chapter 43.21C. Revised Code of Washington.

WAC 173-200. *Water quality standards for ground waters of the state of Washington*, as amended. Washington Administrative Code.

WAC173-216. *State Waste Discharge Permit Program*, as amended. Washington Administrative Code.

WAC 173-303. *Dangerous Waste Regulations*, as amended. Washington Administrative Code.

WAC 173-400. *General Regulation for Air Pollution Sources*, as amended. Washington Administrative Code.

WAC 173-401. *Operating Permit Regulation*, as amended. Washington Administrative Code.

WAC 173-460. *Controls for New Sources of Toxic Air Pollutants*, as amended. Washington Administrative Code.

WAC 173-480. *Ambient Air Quality Standards and Emission Limits for Radionuclides*, as amended. Washington Administrative Code.

WAC 246-247. *On-Site Sewage Systems*, as amended. Washington Administrative Code.

SIGNATURES

The above answers are true and complete to the best of my knowledge. We understand that the lead agency is relying on them to make its decision.

4/25/00

S. H. Wisness, Director
Office of Site Services
US Department of Energy
Richland Operations Office

Date

4/25/00

Maurice J. Bullock
Vice President, BNFL Inc.

Date