This document was too large to scan as a single document. It has been divided into smaller sections.

Section 1 of 3

Document Information			
Document #	RPP-24544	Revision	1B
Title	DEMONSTRATION BULK VITRIFICATION SYS IQRPE/RCRA DESIGN REVIEW PACKAGE		
Date	03/03/2006		
Originator	SHUFORD DH, JEFFERS J, FREDERICKSON J, LUEY J	Originator Co.	CH2M, AMEC, DMJMH+N
Recipient		Recipient Co.	
References	ECN-723118-R3		
Keywords	SUPPL TREATMENT		
Projects	RPP		
Other Information			

S

CH2M HILL ENGINEERING CHANGE NOTICE

Page 1 of 2 ☒ DM ☐ FM ☐ TM

1a. ECN 723118 R 3

1b. Proj. ECN - - R

2. Simple Modification ☒ Yes ☐ No	3. Design Inputs – For full ECNs, record information on the ECN-1 Form (not required for Simple Modifications)		4. Date 2/28/2006
5. Originator's Name, Organization, MSIN, & Phone No. M. J. Holm, Closure Projects Engineering Support, S7-67		6. USQ Number No. - - - R - ☒ N/A	7. Related ECNs ECN-723118, Rev 0 ECN-723118, Rev 1 ECN-723118, Rev 2
8. Title Incorporate Dried Waste Handling System Design Information	9. Bldg. / Facility No. DBVS/241-G	10. Equipment / Component ID N/A	11. Approval Designator ER
12. Engineering Documents/Drawings to be Changed (Incl. Sheet & Rev. Nos.) RPP-24544, Revision 1a		13. Safety Designation ☐ SC ☐ SS ☐ GS ☒ N/A	14. Expedited/Off-Shift ECN? ☐ Yes ☒ No

15a. Work Package Number	15b. Modification Work Completed	15c. Restored to Original Status (TM)	16. Fabrication Support ECN?
N/A	N/A Responsible Engineer / Date	N/A Responsible Engineer / Date	☐ Yes ☒ No

17. Description of the Change (Use ECN Continuation pages as needed)

This ECN revises RPP-24544, Revision 1a, "Demonstration Bulk Vitrification System IQRPE/RCRA Design Review Package" to include the Dried Waste Handling System information in Section 2.4.

Problem: The Dried Waste Handling System portion of the IQRPE/RCRA design package has been completed and requires release/configuration control.

Solution: Update RPP-24544 with RCRA design information on the Dried Waste Handling System so EPA and WDOE can review and approve.

Analysis: The original release and subsequent additions to RPP-24544 are listed below:

RPP-24544, Revision 0, Released on EDT-821657 incorporated Section 2.1 Waste Receipt System
RPP-24544, Revision 1, Released on ECN-723118, Revision 0, incorporated Section 2.3 Secondary Waste System
RPP-24544, Revision 1a, Released on ECN-723118, Revision 1, incorporated Section 2.2 Waste Dryer System.

EPA and WDOE comments on released portions of the document were resolved and incorporated where available.

18. Justification of the Change (Use ECN Continuation pages as needed)

This update to RPP-24544 is to incorporate DBVS Dried Waste Handling System RCRA design information and was performed in accordance with the DBVS project schedule.

No USQ screeing is necessary. This document is being transmitted to the Department of Energy, Office of River Protection. A Documented Safety Analysis (DSA) will be prepared for DBVS upon completion of final design. Design changes made after publication of the DSA will require a USQ screening.

19. ECN Category

☒ Direct Revision
☐ Supplemental
☐ Void/Cancel

ECN Type

☐ Supersedure
☐ Revision

20. Distribution

Name	MSIN	Name	MSIN
DH Shuford	S7-67	MJ Sutey	S7-70
FR Miera	H6-03	JE Van Beek	S7-67
TH May	S7-67	CA Rieck	S7-67
MW Leonard	S7-67	RR True	R3-26
SE Carlson	S7-67	RL Brown	S7-75
WE Bryan	S7-67	JC Hoffman	S7-67
MA Fish	S7-67	^CH2M EQRG	R1-14

Release Stamp

MAR 03 2006
DATE:
HANFORD RELEASE
STA: 4
ID: 8

CH2M HILL ENGINEERING CHANGE NOTICE	1a. ECN 723118 R 3
Page 2 of 2 ☒ DM ☐ FM ☐ TM	1b. Proj. ECN R

21. Revisions Planned (Include a brief description of the contents of each revision)

ECN-723118, R4 is planned to incorporate the information for the Main Off-Gas Treatment System, Section 2.5 and be released as RPP-24544, Revision 1c.

Note: All revisions shall have the approvals of the affected organizations as identified in block 11 "Approval Designator," on page 1 of this ECN.

22. **Commercial Grade Item Dedication Numbers** (associated with this design change)	23. **Engineering Data Transmittal Numbers** (associated with this design change, e.g., new drawings, new documents)
N/A	N/A

24. Other Non Engineering (not in HDCS) documents that need to be modified due to this change

Type of Document	Document Number	Update Completed On	Responsible Engineer (print/sign and date)
Alarm Response Procedure			
Operations Procedure			
Maintenance Procedure			

Type of Document	Document Number	Type of Document	Document Number
N/A			

25. Field Change Notice(s) Used?
☐ Yes ☒ No
If Yes, Record Information on the ECN-2 Form, attach form(s), include a description of the interim resolution on ECN Page 1, block 17, and identify permanent changes.

NOTE: ECNs are required to record and approve all FCNs issued. If the FCNs have not changed the original design media then they are just incorporated into the design media via an ECN. If the FCN did change the original design media then the ECN will include the necessary engineering changes to the original design media.

26. Design Verification Required?
☐ Yes ☒ No
If Yes, as a minimum attach the one page checklist from TFC-ENG-DESIGN-P-17.

27. Approvals

Facility/Project Signatures		Date	A/E Signatures		Date
Resp. Engineer	DH Shuford David H. Shuford	3-1-06	Originator/Design Agent		
Resp. Manager	MJ Sutey MJ Sutey	3/2/06	Professional Engineer		
Quality Assurance			Project Engineer		
IS&H Engineer			Quality Assurance		
NS&L Engineer			Safety		
Environ. Engineer	FR Miera F. R. Miera	3-1-06	Designer		
Engineering Checker	MJ Holm MJ Holm	3-1-06	Environ. Engineer		
Other	RL Brown (Rad Con) R Brown	3-2-06	Other		
Other	JE Van Beek (PM) JE Van Beek	3-1-06	Other		
Other	MW Leonard M.W. L	3/1/06	DEPARTMENT OF ENERGY / OFFICE OF RIVER PROTECTION		
Other			Signature or a Control Number that tracks the Approval Signature		
Other					
Other			ADDITIONAL SIGNATURES		
Other					
Other					

Tank Farm Contractor (TFC) **RECORD OF REVISION**	(1) Document Number RPP-24544	Page 1

(2) Title
Demonstration Bulk Vitrification System IQRPE/RCRA Design Review Package

Change Control Record

(3) Revision	(4) Description of Change - Replace, Add, and Delete Pages	Authorized for Release (5) Resp. Engr. (print/sign/date)	(6) Resp. Mgr. (print/sign/date)
0	Initial release	See EDT 821657	See EDT 821657
0A	Direct revision - see ECN 722947, R0	See ECN 722947, R0	See ECN 722947, R0
1	Direct revision - see ECN 723118, R0	See ECN 723118, R0	See ECN 723118, R0
1a	Direct revision - see ECN 723118, R1	See ECN 723118, R1	See ECN 723118, R1
RS 1b	Direct revision - see ECN 723118, R3	D.H. Shuford 3/2/06 David H Shuford	M.J. Sutey 3/2/06 M J Sutey

BEST AVAILABLE COPY

RPP-24544, Rev. 1b

Demonstration Bulk Vitrification System IQRPE/RCRA Design Review Package

D.H. Shuford
CH2M HILL Hanford Group, Inc.
Richland, WA 99352
U.S. Department of Energy Contract DE-AC27-99RL14047

EDT/ECN:	723118-R3	UC:	
Cost Center:		Charge Code:	501907
B&R Code:		Total Pages:	2446

Key Words: Design Review, Independent Qualified Registered Professional Engineer, Supplemental Treatment, Bulk Vitrification, IQRPE

Abstract: The Supplemental Treatment Test and Demonstration Project is a research, development and demonstration (RD&D) project with the goal of providing the suitability of Bulk Vitrification as an acceptable process for the treatment of tank farm Low Activity Waste. This document provides design information for the regulator's approval in accordance with the requirements of the RD&D permit issued for the project.

TRADEMARK DISCLAIMER. Reference herein to any specific commercial product, process, or service by trade name, trademark, manufacturer, or otherwise, does not necessarily constitute or imply its endorsement, recommendation, or favoring by the United States Government or any agency thereof or its contractors or subcontractors.

Printed in the United States of America. To obtain copies of this document, contact: Document Control Services, P.O. Box 950, Mailstop H6-08, Richland WA 99352, Phone (509) 372-2420; Fax (509) 376-4989.

DATE: MAR 03 2006
HANFORD RELEASE
STA: 4 ID: 8

L.E. Bratton 3/3/06

Release Approval Date Release Stamp

Approved For Public Release

BEST AVAILABLE COPY

RPP-24544
Revision 1b

Demonstration Bulk Vitrification System IQRPE/ RCRA Design Review Package

Prepared for the U.S. Department of Energy
Assistant Secretary for Environmental Management

Contractor for the U.S. Department of Energy
Office of River Protection under Contract DE-AC27-99RL14047

CH2MHILL
Hanford Group, Inc.

P.O. Box 1500
Richland, Washington

BEST AVAILABLE COPY

RPP-24544
Revision 1b

Demonstration Bulk Vitrification System IQRPE/ RCRA Design Review Package

D.H. Shuford
CH2M HILL Hanford Group, Inc.

J. Jeffers
AMEC Earth and Environmental

J. Frederickson
J. Luey
DMJM Technology

Date Published
March 2006

Prepared for the U.S. Department of Energy
Assistant Secretary for Environmental Management

Contractor for the U.S. Department of Energy
Office of River Protection under Contract DE-AC27-99RL14047

CH2MHILL
Hanford Group, Inc.
P.O. Box 1500
Richland, Washington

Release Approval _____ Date _____

TRADEMARK DISCLAIMER

Reference herein to any specific commercial product, process, or service by trade name, trademark, manufacturer, or otherwise, does not necessarily constitute or imply its endorsement, recommendation, or favoring by the United States Government or any agency thereof or its contractors or subcontractors.

This report has been reproduced from the best available copy.

Printed in the United States of America

EXECUTIVE SUMMARY

This document provides design information for the Demonstration Bulk Vitrification System Dried Waste Handling System as well as an overview of the system. This information is provided in accordance with the requirements of Permit No. WA 7890008967, "PERMIT FOR DANGEROUS AND OR MIXED WASTE RESEARCH, DEVELOPMENT, AND DEMONSTRATION."

Specific design information is provided in this report for Dried Waste Handling System, with details for installation and the Demonstration Bulk Vitrification System site to follow in a separate installation package. Specific design information discussed in the report is presented in the following areas:

- System description,
- System location,
- Calculations,
- System sketches,
- Design codes and standards,
- Waste assessment,
- Controls,
- Secondary containment and leak detection,
- Corrosion assessment,
- Inspection schedule, and
- Installation assessment.

This page intentionally left blank.

CONTENTS

1.0 INTRODUCTION 1-1

2.0 SYSTEM ASSESSMENTS 2-1

2.2 WASTE DRYER SYSTEM 2-13

2.3 SECONDARY WASTE SYSTEM 2-29

2.4 DRIED WASTE HANDLING SYSTEM 2-41

2.4.1 System Description 2-41

2.4.2 System Location 2-42

2.4.3 Calculations 2-43

2.4.4 Dried Waste Handling System Sketches 2-43

2.4.5 Design Codes and Standards 2-43

2.4.6 Waste Assessment 2-44

2.4.7 Controls 2-44

2.4.8 Secondary Containment and Leak Detection 2-46

2.4.9 Corrosion Assessment 2-47

2.4.10 Inspection Schedule 2-47

2.4.11 Installation Assessment 2-48

2.5 MAIN OFF-GAS TREATMENT SYSTEM 2-51

2.6 IN-CONTAINER VITRIFICATION SYSTEM 2-51

3.0 REFERENCES 3-1

APPENDICES

A **Demonstration Bulk Vitrification System Calculations**

A1 Waste Receipt System A1-1
A2 Waste Dryer System A2-1
A3 Secondary Waste System A3-1
A4 Dried Waste Handling System A4-1
A5 Main Off-Gas Treatment System A5-1
A6 In-Container Vitrification System A6-1

B **Demonstration Bulk Vitrification System Site Maps ..... B-i**

C **Demonstration Bulk Vitrification System Drawings and Sketches ..... C-i**

C1 Waste Receipt System C1-1
C2 Waste Dryer System C2-1
C3 Secondary Waste System C3-1
C4 Dried Waste Handling System C4-1
C5 Main Off-Gas Treatment System C5-1
C6 In-Container Vitrification System C6-1

D **Demonstration Bulk Vitrification System Piping and Instrumentation Diagrams ..... D-i**

D1 Waste Receipt System D1-1
D2 Waste Dryer System D2-1
D3 Secondary Waste System D3-1
D4 Dried Waste Handling System D4-1
D5 Main Off-Gas Treatment System D5-1
D6 In-Container Vitrification System D6-1

E **Demonstration Bulk Vitrification System Process Flow Diagrams E-1**

F Demonstration Bulk Vitrification System S-109 Waste Simulant Characteristics F-1

G **Demonstration Bulk Vitrification System Technical Specifications ..... G-i**

G1 Waste Receipt System G1-1
G2 Waste Dryer System G2-1
G3 Secondary Waste System G3-1
G4 Dried Waste Handling System G4-1
G5 Main Off-Gas Treatment System G5-1
G6 In-Container Vitrification System G6-1

H Demonstration Bulk Vitrification System Miscellaneous Supporting Data ..... H-i

H1 Waste Receipt System H1-1
H2 Waste Dryer System H2-1
H3 Secondary Waste System H3-1
H4 Dried Waste Handling System H4-1
H5 Main Off-Gas Treatment System H5-1
H6 In-Container Vitrification System H6-1

LIST OF FIGURES

1-1. Bulk Vitrification Unit Operation Interfaces for the Main Process Systems 1-4

LIST OF TABLES

1-1. Summary of Currently Planned Full-Scale Tests in the Demonstration Bulk Vitrification System 1-6

2-1. Design Codes and Standards for the Waste Receipt System 2-6

2-2. Design Codes and Standards for the Waste Dryer System 2-16

2-3. Selected Waste Dryer System Interlocks 2-22

2-4. Design Codes and Standards for the Secondary Waste System 2-33

2-5. Selected Secondary Waste System Interlocks 2-35

2-6. Design Codes and Standards for the Dried Waste Handling System 2-44

2-7. Dried Waste Handling System Interlocks 2-46

This page intentionally left blank.

LIST OF TERMS

Editor's Note: The List of Terms and Trademarks include callouts from previous packages.

AMEC	AMEC Earth and Environmental, Inc.
AWTE	ancillary waste transfer enclosure
DBVS	Demonstration Bulk Vitrification System
DCRS	Dryer and Condensate Recovery System
Ecology	Washington State Department of Ecology
EPDM	ethylene propylene diene monomer
ETF	Effluent Treatment Facility
HEGA	high-efficiency gas adsorber
HEPA	high-efficiency particulate air
HIHTL	hose-in-hose transfer line
ICV™	In-Container Vitrification™
IDF	Integrated Disposal Facility
ILAW	immobilized low-activity waste
IQRPE	Independent Qualified Registered Professional Engineer
ISO	International Organization for Standardization
LAW	low-activity waste
MCS	Monitoring and Control System
OGTS	Main Off-Gas Treatment System
P&ID	piping and instrumentation diagram
PFD	process flow diagram
RD&D	Research, Development, and Demonstration
S-109 WRS	Single-shell Tank 241-S-109 Waste Retrieval System
SCR	selective catalytic reduction
SST	Single-shell Tank

TRADEMARKS

GeoMelt	Registered trademark of Geosafe Corporation.
ICV	Trademark of AMEC, Inc.
MathCad	Registered trademark of Mathsoft, Inc.
Megger	Trademark of Evershed & Vignoles Ltd. Corporation.
National Electrical Code	Registered trademark of the National Fire Protection Association.
NEMA	Registered trademark of the National Electrical Manufacturers Association.
STAAD	Registered trademark of Research Engineers, Inc.
Thermeez	Registered trademark of Barry D. Reznik.
Windows	Registered trademark of the Microsoft Corporation.

2.4 DRIED WASTE HANDLING SYSTEM

The Dried Waste Handling System pneumatically conveys dried waste from the Waste Dryer System to the ICV System. The dried waste can be transferred at up to 16,000 lb/h. The system uses as little air as required to keep the transfer lines from acquiring buildup or plugging. The system will be used intermittently to transfer the dryer contents to the ICV box, approximately three times a day.

2.4.1 System Description

The components of the Dried Waste Handling System include the Dried Waste Inlet Skid (interfaces with the Waste Dryer System at the discharge flange on the Dryer and Condensate Recovery Skid), the Dried Waste Transfer Skid (provides motive force for material conveyance), the AWTE with associated airlocks and transfer chutes, and the melt area support structure. The AWTE and chute interface with the ICV box lid represent the boundary with the ICV System.

2.4.1.1 Dried Waste Transfer System (Specification 145579-D-SP-032). The waste is to be lifted 28 ft from the dryer discharge to the top of the AWTE. The dryer interface is 12 ft above the ground facing down. The inlet port on the AWTE is 29 ft above the ground facing up (see interface Sketch DBVS-SK-M107, Sheets 1 through 3, in Appendix C4). While transferring, the waste transfer system will cycle between the two receivers above the AWTE. Dried waste is fed by gravity from the rotary valves into the ICV System. The waste receiver and filter housings are vented using a vacuum blower that draws through sintered metal filters and HEPA filters and then discharges to the OGTS.

During the transfer of dried waste, the interconnecting piping between the discharge of the Waste Dryer System and the waste receiver and filter housings is maintained at a vacuum relative to atmosphere. The gravity-fed line to the ICV System is also maintained at a slight negative pressure relative to atmosphere by the OGTS connection to the AWTE and ICV box plenum space. These conditions maintain both solids and vapors in the piping and transfer equipment with vapors being vented to the OGTS.

2.4.1.2 Ancillary Waste Transfer Enclosure (Specification 145579-D-SP-017). The AWTE provides a contained environment for the connection and disconnection of the dried waste feed chutes, the top-off soil chutes, the ICV box ventilation connection, electrodes, and the ICV off-gas connection.

With the ICV box correctly positioned in the melt station, the interfacing chutes and piping are lowered onto the box lid by a pair of pneumatic actuators and locked in place. Except for the electrodes, each chute and piping from the AWTE has a compressible seal around it that creates an individual seal with the box lid. When lowered onto the box lid, the weight compresses the seals against sealing plates located at each port. Covers on the bottom of the AWTE are opened to allow access to the box lid for removal of the port flanges in preparation for connecting the feed chutes. Each port in the ICV box lid also has a seal, and when the chutes are extended into the box lid a flange on the chute compresses the seal in the port. This effectively provides

double containment during the transfer of dried waste into the ICV box. The same system is applied to the ventilation and level indicator openings. All connections to the box lid are locked in place to prevent accidental retraction of the chutes for any reason during the melt process.

The AWTE is vented to the OGTS to maintain a negative pressure inside the AWTE. The pressure inside the ICV box is maintained lower than the pressure inside the AWTE and atmospheric pressure, thus ensuring no leakage from the ICV box.

The dried waste feed chutes interface with the Dried Waste Transfer System at the discharge flange of the rotary feeders, located below the vacuum receiver units in the melt area enclosure. The top-off soil feed chutes interface with the process additive handling system at the discharge flange of the top-off soil impingement tanks in the melt area enclosure. These chutes interface with the AWTE and continue through the AWTE to their respective interface ports on the ICV box lid. The materials are gravity-fed from the discharge flange of the rotary feeders, down the feed chutes, and into the dual isolation airlock system (see Specification 145579-D-SP-018 in Appendix G4). From the airlock, the material is discharged in batches down the chute and into the ICV box. Each chute has a telescopic section located inside the AWTE to allow extension into and retraction from the ICV box lid.

The five discharge chutes within the AWTE interface/mate with discharge chutes attached to the ICV box lid. The chutes on the lid are raised to connect with the AWTE discharge chutes and use a gasket for sealing. An environmental barrier will be used to provide a connection between the AWTE floor and the ICV box for each ICV box connection. The environmental barrier protects the workers, mitigates the spread of contamination, and seals the floor penetrations to the ICV box. The ICV box ventilation inlet and ventilation piping interface/mate with the ICV box lid via piping assembles that are raised to connect with the ventilation piping within the AWTE.

2.4.1.3 Melt Area Structure. The dried waste transfer skid, AWTE, material feed chutes, and process additives handling system equipment are supported by the melt area structure. The melt area structure general arrangement is shown on Drawings F-145579-00-D-0041 and -0051 in Appendix C4. Drawings for the melt area structure are contained in Appendix C4 (see Drawings F-145579-00-B-0001 through -0007, and -0010 through -0012).

2.4.2 System Location

The Dried Waste Handling System is located just south of the ICV Box Storage Area. Piping between the Dried Waste Inlet Skid and the Dried Waste Transfer Skid will be mounted to the melt area structure for its vertical runs and be supported by pipe supports for its horizontal run. The Dried Waste Inlet Skid is located beneath the waste dryer on Foundation Pad #2 (may be anchored to foundation pad if required). The Dried Waste Transfer Skid and AWTE (with associated components) will be mounted to the melt area structure.

2.4.3 Calculations

The Dried Waste Handling System equipment and structures will be analyzed and designed in accordance with UBC (1997) and ASCE 7-98. The calculations will demonstrate that equipment and the structure will withstand applied loads without loss of integrity or release of radioactive/hazardous material. They will also show that the skids will not tip over nor slide. The structural analysis requirements are identified in the specifications (Appendix G4).

Components of the Dried Waste Handling System will be supported by the Melt Area Support Structure. The analysis of the structure to support the equipment loads and meet site requirements is contained in Calculation 145579-B-CA-011 (see Appendix A4).

Mechanical calculations performed for the piping system will be prepared in accordance with piping code requirements in ASME B31.3. Calculations will include the following areas as applicable:

- Pipe wall thickness calculations for pressure;
- Stress calculations for sustained loads because of pressure, dead load, and any other sustained loads;
- Stress calculations for displacement stresses, such as thermal loads; and
- Stress calculations for occasional load such as pressure, dead weight, other sustained loads, and earthquake loads.

Mechanical calculations will also account for compatibility of the selected material components with the waste material to be handled, and assess if an allowance is required for corrosion, or other wear (such as erosion), in the design of the system. Additional calculations that may be performed, if applicable for the assembled system, include: vacuum pump sizing, valve actuator sizing, and wear allowances. An estimate of the heat load to the AWTE from the ICV box lid and components exposed to the interior of the ICV box is provided in Calculation 145579-D-CA-007 (see Appendix A).

2.4.4 Dried Waste Handling System Sketches

The general arrangement of the system relative to the waste dryer and melt area structures is depicted in Drawing DBVS-SK-M107, Sheets 1 through 3 (see Appendix C4). The melt area structure general arrangement, with AWTE and other equipment, is shown on general arrangement Drawings F-145579-00-D-0041 and -0051 in Appendix C4.

2.4.5 Design Codes and Standards

The design codes and standards that apply to the Dried Waste Handling System are identified in Table 2-6. Applicable and relevant portions of the design codes and standards are flowed down

into the specifications, drawings and calculations. See Section 3.0 for complete reference information.

Table 2-6. Design Codes and Standards for the Dried Waste Handling System.

Design Code or Standard	Design Code or Standard
10 CFR 830	ASTM A 269
29 CFR 1910	ASTM A 312/A 312M
40 CFR 264	ASTM A 351/A 351M-03
47 CFR 15	ASTM A 500
AGS-G001-1998	ASTM A 569
AISC (Allowable Stress Design)	ASTM B 187/B 187M-03
AISC (Load and Resistance Factor Design)	AWS D1.1/D1.1M
ANSI/AWS D1.3	AWS D1.6
ANSI C63.16	AWS QC-1
ANSI/IESNA RP-7	DOE/RL-92-36
ANSI/ISA-82.02.01	HNF-2962
ANSI/ISA-82.02.02	HNF-SD-GN-ER-501
ANSI Y14.1	IEC 61000-4-2
ANSI Y14.5M	IEEE Std C37.90.2
ASCE 4-98	IEEE C62.41.1
ASCE 7-98	IEEE C62.41.2
ASHRAE Fundamentals Handbook	IEEE Std 142
ASME B&PV Code	NEMA MG-1
Section IX	NFPA 70
ASME B30.20	TFC-ENG-STD-06
ASME B31.3	UBC, 1997
ASME NQA-1, 1994	UL-listed
ASNT SNT-TC-1A	UL 508A
ASTM A 36/A 36M	UL 840
ASTM A 108	WAC 173-303-640

2.4.6 Waste Assessment

The Dried Waste Handling System is designed to pneumatically convey dried waste material from the Waste Dryer System to the ICV System. Physical properties of the material to be conveyed are contained in the specifications (see Appendix G4). Because this is a dry system with little potential to introduce moisture into the system, the specifications are mainly focused on the physical characteristics rather than the chemical properties of the dried waste material.

The maximum estimated unshielded contact radiation dose is 10,000 R for dried waste-contacting components, and 1,000 R for nonwaste-contacting components, based on a five-year design life.

2.4.7 Controls

Reference to specific instrumentation labels are provided in the following sections to assist the reader; however, it should be noted that these "currently assigned identification numbers" may

change as detailed fabrication information is received from the suppliers of equipment. Loop diagrams are provided in Appendix C4 for those instruments discussed.

2.4.7.1 Control of Dry Waste Feed to the ICV System. The criteria for initiating dried waste flow from the waste dryer were discussed in Section 2.2.7.5. Once initiated, dried waste is pneumatically conveyed from the dryer to one of the waste receiver units. Flow is metered into the receiver units using the Waste Receiver Rotary Feeder 33-D85-095 (see Drawing F-145579-33-A-0106 in Appendix D4). As material enters a receiver unit, solids and gases are separated with the solids collecting in the receiver unit and the gases vented through sintered metal filters that are integral to the receiver units (see 33-NO2-101 and 33-NO2-102). Discharge from the receiver units is controlled by rotary airlocks (see 33-D85-090 and 33-D85-091). Flow into the ICV System is also controlled by sequenced, remotely operated valves (see 34-YV-009, 34-YV-010, 34-YV-019, and 34-YV-020 on Drawing F-145579-34-A-0101 in Appendix D4). Specific criteria for the addition of material to the ICV box will be developed as part of full-scale testing and will be influenced by how material spreads inside the box and how material is incorporated into the melt.

2.4.7.2 Pressure Control. The Dried Waste Handling System piping system is designed to operate at a vacuum relative to atmosphere. For the Dried Waste Transfer System, differential pressure is measured across the sintered metal filters (see 33-PDIT-417 and 33-PDIT-418 on Drawing F-145579-33-A-0106 in Appendix D4) to determine when the sintered metal filters should be pulsed with compressed air to "clean" material back into the receiver unit. Specific set-points will be based on manufacturer recommendations and the results from full-scale integration testing. Differential pressure is also measured across the HEPA filters leading to the blower unit (see 33-PDIT-419 and 33-PDIT-424). The purpose of these filters is to minimize the contamination potential for the OGTS piping. Once a first-stage filter becomes loaded, it can be valved out of service to allow for change-out of the filter.

The AWTE is vented to the OGTS and maintained at a negative pressure relative to atmosphere. Flow is controlled by 34-HV-111 and 34-HV-113 (see Drawing F-145579-34-A-0101 in Appendix D4). Flow rate is monitored using 34-FE-114. Inlet air is provided through a filtered inlet, with the differential pressure across the inlet filter monitored by 34-PDIT-112. Pressures and flows are monitored and controlled such that the ICV box is maintained at a greater vacuum than the AWTE, thus containing gases generated by the process to the ICV box. The relative pressure between the AWTE and ICV box is measured by 34-PDIT-115.

2.4.7.3 Interlock Philosophy. Two types of interlocks are shown on the P&ID drawings associated with the Dried Waste Handling System:

1. Safety Hardwired Interlocks consist of those interlocks that are necessary to prevent or mitigate a hazard that, if not addressed, could lead to a safety event. This event could be a release of radiological or hazardous gases.

2. Control System (safety related) Interlocks are associated with safety interlocks, but do not meet the threshold requiring a "credited" safety interlock. Automatic and immediate

action will occur using the non-safety control system. Credited refers to items specifically listed as required in the Documented Safety Analysis (DSA).

As shown in Table 2-7, interlocks are grouped based on the initiating signal type and are uniquely identified by a number. Typically, the interlock number is based on the initiator of the interlock, examples include pressure or flow. A description is located on both the source sheet as well as each designation sheet on the P&IDs.

Table 2-7. Dried Waste Handling System Interlocks.

Condition	Interlock Number	Action
Low ICV™ Inlet Air Flow (safety) from Drawing F-145579-35-A-0100	I6 (hardwired)	Stop all waste transfer by • De-energizes (shuts) Dried Waste Dryer Discharge Valve 33-YV-013. (See Drawing F-145579-33-A-0100) • De-energizes (shuts) Dried Waste Airlock Valves 34-YV-009, 34-YV-010, 34-YV-019, and 34-YV-020. (See Drawing F-145579-34-A-0101)
Low ICV Inlet Air Flow (non-safety) from Drawing F-145579-35-A-0100	I7 (control system)	Stops the Waste Feed Vacuum Blower 33-D61-094. (See Drawing F-145579-33-A-0106)
Only one valve can be operated (open) at a time from Drawing F-145579-34-A-0101	I9 (hardwired)	Prevents both airlock valves in a line from being opened at the same time. To open either valve, the paired valve must be closed. • 34-YV-009 and 34-YV-010 • 34-YV-019 and 34-YV-020.

ICV = In-Container Vitrification (Trademark of AMEC, Inc.).

MCS = Monitoring and Control System.

Note that normal MCS control sequences, or normal protection of equipment, are not shown to reduce drawing clutter and to focus on these significant interlocks. Normal control functions are presented to the MCS operator on the operating system computer screens.

2.4.8 Secondary Containment and Leak Detection

Containment for the Dried Waste Handling System is accomplished through operation of the system at a vacuum relative to atmosphere, use of pressure tested components, and use of secondary containment for the interconnecting piping between the dried waste inlet skid and the dried waste transfer skid. Secondary containment will also be placed under the waste dryer at the point of waste discharge into the dried waste inlet skid. Liquids are not present in the system, thus a leak detection system for liquids is not provided.

The dried waste feed chutes provide primary containment for the dried waste as it is delivered to the ICV box. The AWTE provides secondary containment at the process connections with the ICV box. The melt area enclosure provides additional containment around the AWTE and dried waste feed chutes.

Periodic visual inspection of the Dried Waste Handling System will be conducted to look for signs dried waste leaks around the melt and dryer area equipment and to inspect the general condition of the containment system. In summary, the steps that will be taken in the area of leak detection for the Dried Waste Handling System are:

- System will be checked before operation (visual inspection for equipment and piping alignment along with vendor and construction testing for pressure and tightness).
- Pinhole leaks in primary confinement barrier will result in a preferred path into the barrier because the system is operated at a vacuum relative to atmosphere. Sections that have secondary confinement have a pressure gauge on the secondary barrier to identify presence of a breech in the primary barrier.
- Periodic visual inspections will be performed before, and after, a melt campaign.
- Catastrophic failure is not unique to the Dried Waste Handling System and will be observed in a number of ways (e.g., Dried Waste Transfer System alarms will be set-off when not in normal operating range, alarms for other systems will be set-off when not in normal operating range, and locations such as the Waste Dryer and ICV Box are equipped with cameras, linked to the Control Trailer, which will show conditions in two of the processing units).

2.4.9 Corrosion Assessment

An independent corrosion expert has reviewed the specifications and data sheets associated with the Dried Waste Handling System. For the Dried Waste Transfer System (Specification 145579-D-SP-032), no specific concerns were noted (the assessment is provided in Appendix H4). Erosion is a required element to be addressed by the provider of the Dried Waste Transfer System (discussed as a wear allowance in Section 3.3.11.2 specification 145579-D-SP-032 in Appendix G4). There is a concern for scaling of carbon steel in air for the AWTE due to the projected temperatures (Specification 145579-D-SP-017). The effect of erosion in the chutes is a potential concern that requires evaluation, once velocities and mass loadings are determined.

2.4.10 Inspection Schedule

Inspection of the Dried Waste Handling System components will be performed at the applicable supplier's facility to ensure they comply with the design requirements. Additionally, before placing the system into service, the Dried Waste Handling System will be inspected by a

qualified, independent installation inspector or an IQRPE for structural damage and for proper installation. This individual is responsible for certifying to Ecology that the Dried Waste Handling System was properly installed. The inspection will include the following:

- Evaluation of welds to verify no cracking or lack of fusion;
- Confirmation that no punctures, scrapes of protective coatings, cracks, corrosion, or other structure damage are present;
- Performance of tank tightness test to verify no leaks are present and that pressure or vacuum did not change beyond specifications over the test period;
- Verification of the protection of ancillary equipment against physical damage and stress; and
- Installation inspection that conforms to consensus-recognized standards including the documentation of findings and corrective actions documented in a post-inspection report.

The need for an annual inspection will be determined by the Owner/Operator in accordance with Permit condition IV.A.8.d.i.

2.4.11 Installation Assessment

Sketch DBVS-SK-M107 (Sheets 1 through 3), and Drawings F-145579-00-D-0041 and -0051 (Appendix C4) illustrate the projected completed assembly of the installed equipment at the DBVS site. Refinement of the drawings and development of interface and installation details will be performed as detailed drawings and installation instructions from equipment suppliers are received. The modular nature of the Dried Waste Handling System will facilitate installation of the system through the minimization of the number of pieces of equipment that require placement and number of field connections. Installation of the Dried Waste Transfer System is anticipated as being installed after the waste dryer support structure and melt area support structure are assembled and major pieces of equipment (such as the DCRS skid and the AWTE) are in place. Once these other pieces of equipment are in place, the Dried Waste Transfer System can be installed and the pipe runs connected to available places on the support structure.

An assessment of the installation of the Dried Waste Handling System will be performed during the actual installation on site and will include an independent inspection of the following activities by an IQRPE or a Qualified Independent Inspector:

- Visual inspection and pressure testing of connected piping systems;
- Placement of anchor bolts and connection to equipment;

- Placement of the shop-fabricated systems;
- Installation of ancillary equipment and connection to facility systems; and
- Tightness testing of the assembled system before placement into service.

Upon completion of the final installation, an inspection report documenting the results of the tank system installation will be prepared by the IQRPE. The inspection results will be documented in the report and included in the Operating Record. This record will be accessible at the DBVS site and will contain:

1. An as-built site plan;
2. An as-built drawing set of the installed Dried Waste Handling System;
3. Inspection notes, photographs, and any other material used to document inspection activities;
4. Documentation of any defects discovered;
5. Documentation of tightness testing results;
6. A signed and dated statement certifying the corrosion protection system (if installed); and
7. A statement signed by the IQRPE certifying the proper installation of the tank system.

The assembled system will undergo testing as a subsystem and as part of the integrated complete DBVS facility. Subsystem testing that may be performed includes vacuum blower operation and performance of instrumentation. Complete DBVS facility integrated performance testing are projected to involve the use noncontaminated, nonregulated test materials for functional testing of the assembled system.

This page intentionally left blank.

3.0 REFERENCES

Editor's Note: The References include citations from previous packages.

10 CFR 830, "Nuclear Safety Management," *Code of Federal Regulations*, as amended.

29 CFR 1910, "Occupational Safety and Health Standards," *Code of Federal Regulations*, as amended.

40 CFR 264, "Standards for Owners and Operators of Hazardous Waste Treatment, Storage, and Disposal Facilities," Subpart J, *Code of Federal Regulations*, as amended.

47 CFR 15, "Radio Frequency Devices," *Code of Federal Regulations*, as amended.

AATCC Test Method 27, *Water Resistance: Hydrostatic Pressure Test*, American Association of Textile Chemists and Colorists, Research Triangle Park, North Carolina.

ACI 318-02, *Building Code Requirements for Structural Concrete (ACI 318-02) and Commentary (ACI 318R-02)*, American Concrete Institution, Farmington Hills, Michigan.

AGS-G001-1998, *Guideline for Gloveboxes*, American Glovebox Society, Santa Rosa, California.

AISC, *Manual of Steel Construction—Allowable Stress Design*, Ninth Edition, American Institute of Steel Construction, Chicago, Illinois.

AISC, *Manual of Steel Construction—Load and Resistance Factor Design*, Third Edition, American Institute of Steel Construction, Chicago, Illinois.

ANSI C63.16, *American National Standard Guide for Electrostatic Discharge Test Methodologies and Criteria for Electronic Equipment*, American National Standards Institute, Washington, D.C.

ANSI FCI 70-2, *Control Valve Seat Leakage*, Fluid Controls Institute, Inc., Cleveland, Ohio.

ANSI Y14.1, *Drawing Sheet Size and Format*, American National Standards Institute, Inc., New York, New York.

ANSI Y14.5M, *Dimensioning and Tolerancing*, American National Standards Institute, New York, New York.

ANSI/ASME B1.20.1, *Pipe Threads, General Purpose (Inch)*, American Society of Mechanical Engineers, New York, New York. AATCC Test Method 27, *Water Resistance: Hydrostatic Pressure Test*, American Association of Textile Chemists and Colorists, Research Triangle Park, North Carolina.

ANSI/AWWA D100, *AWWA Standard for Welded Steel Tanks for Water Storage*, American Water Works Association, Denver, Colorado.

ANSI/AWS D1.3-98, *Structural Welding Code—Sheet Steel,* American Welding Society, Miami, Florida.

ANSI/HI 3.1-3.5, *American National Standard for Rotary Pumps for Nomenclature, Definitions, Applications and Operation*, Hydraulic Institute, Parsippany, New Jersey.

ANSI/HI 3.6, *American National Standard for Rotary Pump Tests*, Hydraulic Institute, Parsippany, New Jersey.

ANSI/IESNA RP-7, *Lighting Industrial Facilities*, Illuminating Engineering Society of North America, New York, New York.

ANSI/ISA-82.02.01-1999 (IEC 61010-1 Mod), *American National Standard for Safety Standard for Electrical and Electronic Test, Measuring, Controlling, and Related Equipment-General Requirements,* The Instrumentation, Systems, and Automation Society, Research Triangle Park, North Carolina.

ANSI/ISA-82.02.02-1996 (IEC 61010-2-031), *American National Standard for Safety Requirements for Electrical Equipment for Measurement, Control, and Laboratory Use,* The Instrumentation, Systems, and Automation Society, Research Triangle Park, North Carolina.

API Standard 620, *Design and Construction of Large, Welded, Low-Pressure Storage Tank*, American Petroleum Institute, Washington, D.C.

ASCE 4-98, *Seismic Analysis of Safety-Related Nuclear Structures*, American Society of Civil Engineers, Reston, Virginia.

ASCE 7-98, *Minimum Design Loads for Buildings and Other Structures*, American Society of Civil Engineers, Reston, Virginia.

ASHRAE Fundamentals Handbook, *2001 ASHRAE Handbook -- Fundamentals*, American Society of Heating, Refrigerating, and Air Conditioning Engineers, Atlanta, Georgia.

ASME B&PV Code, *ASME Boiler and Pressure Vessel Code*, American Society of Mechanical Engineers, New York, New York.

Section I, "Power Boilers"

Section VIII, "Rules for Construction of Pressure Vessels"

Section IX, "Welding and Brazing Qualifications"

ASME B16.5, *Pipe Flanges and Flanged Fittings*, American Society of Mechanical Engineers, New York, New York.

ASME B16.9, *Factory-Made Wrought Steel Buttwelding Fittings*, American Society of Mechanical Engineers, New York, New York.

ASME B16.11, *Forged Fittings, Socket Welding and Threaded*, American Society of Mechanical Engineers, New York, New York.

ASME B18.2.1, *Square and Hex Bolts and Screws Inch Series*, American Society of Mechanical Engineers, New York, New York.

ASME B18.2.2, *Square and Hex Nuts*, American Society of Mechanical Engineers, New York, New York.

ASME B30.20, *Below-the-Hook Lifting Devices*, American Society of Mechanical Engineers, New York, New York.

ASME B31.3, *Process Piping*, American Society of Mechanical Engineers, New York, New York.

ASME NQA-1, 1994, *Quality Assurance Program Requirements for Nuclear Facilities*, American Society of Mechanical Engineers, New York, New York.

ASME PCC-1, *Guidelines for Pressure Boundary Bolted Flange Joint Assembly*, American Society of Mechanical Engineers, New York, New York.

ASNT SNT-TC-1A, *Recommended Practice*, American Society of Nondestructive Testing, Columbus, Ohio.

ASTM A 36/A 36M, *Standard Specification for Carbon Structural Steel*, American Society of Testing and Materials, New York, New York.

ASTM A 53/A 53M, *Standard Specification for Pipe, Steel, Black and Hot-Dipped, Zinc-Coated, Welded and Seamless*, American Society of Testing and Materials, New York, New York.

ASTM A 105/A 105M, *Standard Specification for Carbon Steel Forgings for Piping Applications*, American Society for Testing and Materials, West Conshohocken, Pennsylvania.

ASTM A 106, *Standard Specification for Carbon Steel Forgings for Piping Applications*, American Society for Testing and Materials, West Conshohocken, Pennsylvania.

ASTM A 108, *Standard Specification for Steel Bars, Carbon, Cold-Finished, Standard Quality*, American Society for Testing and Materials, West Conshohocken, Pennsylvania.

ASTM A 182/A 182M, *Standard Specification for Forged or Rolled Alloy-Steel Pipe Flanges, Forged Fittings, and Valves and Parts for High-Temperature Service*, American Society for Testing and Materials, West Conshohocken, Pennsylvania.

ASTM A 193/A 193M, *Standard Specification for Alloy-Steel and Stainless Steel Bolting Materials for High-Temperature Service*, American Society for Testing and Materials, West Conshohocken, Pennsylvania.

ASTM A 194/A 194M, *Standard Specification for Carbon and Alloy Steel Nuts for Bolts for High Pressure and High Temperature Service, or Both*, American Society for Testing and Materials, West Conshohocken, Pennsylvania.

ASTM A 234/A 234M, *Standard Specification for Piping Fittings of Wrought Carbon Steel and Alloy Steel for Moderate and High Temperature Service*, American Society for Testing and Materials, West Conshohocken, Pennsylvania.

ASTM A 240/A 240M, *Standard Specification for Chromium and Chromium-Nickel Stainless Steel Plate, Sheet, and Strip for Pressure Vessels and for General Applications*, American Society for Testing and Materials, West Conshohocken, Pennsylvania.

ASTM A 269, *Standard Specification for Seamless and Welded Austenitic Stainless Steel Tubing for General Service*, American Society of Testing and Materials, New York, New York.

ASTM A 276, *Standard Specification for Stainless Steel Bars and Shapes*, American Society of Testing and Materials, New York, New York.

ASTM A 307, *Standard Specification for Carbon Steel Bolts and Studs, 60 000 PSI Tensile Strength*, American Society for Testing and Materials, West Conshohocken, Pennsylvania.

ASTM A 312/A 312M, *Standard Specification for Seamless and Welded Austenitic Stainless Steel Pipes,* American Society for Testing and Materials, West Conshohocken, Pennsylvania.

ASTM A 325, *Standard Specification for Structural Bolts, Steel, Heat Treated, 120/105 ksi Minimum Tensile Strength*, American Society for Testing and Materials, West Conshohocken, Pennsylvania.

ASTM A 351/A 351M-03, *Standard Specification for Castings, Austenitic, Austenitic-Ferritic (Duplex), for Pressure-Containing Parts*, American Society for Testing and Materials, West Conshohocken, Pennsylvania.

ASTM A 354, *Standard Specification for Quenched and Tempered Alloy Steel Bolts, Studs, and other Externally Threaded Fasteners*, American Society for Testing and Materials, West Conshohocken, Pennsylvania.

ASTM A 403/A 403M, *Standard Specification for Wrought Austenitic Stainless Steel Piping Fittings,* American Society for Testing and Materials, West Conshohocken, Pennsylvania.

ASTM A 480/A 480M, *Standard Specification for* General Requirements for Flat-Rolled Stainless and Heat-Resisting Steel Plate, Sheet, and Strip, American Society for Testing and Materials, West Conshohocken, Pennsylvania.

ASTM A 500, *Standard Specification for Cold-Formed Welded and Seamless Carbon Steel Structural Tubing in Rounds and Shapes*, American Society for Testing and Materials, West Conshohocken, Pennsylvania.

ASTM A 563a, *Standard Specification for Carbon and Alloy Steel Nuts*, American Society for Testing and Materials, West Conshohocken, Pennsylvania.

ASTM A 569, *Standard Specification for Steel, Carbon (0.15 Maximum, Percent), Hot-Rolled Sheet and Strip Commercial*, American Society for Testing and Materials, West Conshohocken, Pennsylvania.

ASTM B 187/B 187M-03, *Standard Specification for Copper, Bus Bar, Rod, and Shapes and General Purpose Rod, Bar, and Shapes*, American Society for Testing and Materials, West Conshohocken, Pennsylvania.

ASTM C 518, *Standard Test Method for Steady-State Thermal Transmission Properties by Means of the Heat Flow Meter Apparatus*, American Society for Testing and Materials, West Conshohocken, Pennsylvania.

ASTM D 1621, *Standard Test Method for Compressive Properties of Rigid Cellular Plastics*, American Society for Testing and Materials, West Conshohocken, Pennsylvania.

ASTM D 1622, *Standard Test Method for Apparent Density of Rigid Cellular Plastics*, American Society for Testing and Materials, West Conshohocken, Pennsylvania.

ASTM D 380, *Standard Test Method for Rubber Hose*, American Society for Testing and Materials, West Conshohocken, Pennsylvania.

ASTM D 991, *Standard Test Method for Rubber Property-Volume Resistivity Of Electrically Conductive and Antistatic Products*, American Society for Testing and Materials, West Conshohocken, Pennsylvania.

ASTM D 5162, *Standard Practice for Discountability (Holiday) Testing of Nonconductive Protective Coating on Metallic Substrates*, American Society for Testing and Materials, West Conshohocken, Pennsylvania.

ASTM E 84, *Standard Test Method for Surface Burning Characteristics of Building Materials*, American Society for Testing and Materials, West Conshohocken, Pennsylvania.

ASTM E 96, *Standard Test Methods for Water Vapor Transmission of Materials*, American Society for Testing and Materials, West Conshohocken, Pennsylvania.

ASTM E 285, *Standard Test Method for Oxyacetylene Ablation Testing of Thermal Insulation Materials*, American Society for Testing and Materials, West Conshohocken, Pennsylvania.

AWS D1.1/D1.1M, *Structural Welding Code—Steel*, American Welding Society, Miami, Florida.

AWS D1.6, *Structural Welding Code—Stainless Steel*, American Welding Society, Miami, Florida.

AWS QC-1, *Standard for AWS Certification of Welding Inspectors*, American Welding Society, Miami, Florida.

Bagaasen, L.M., J.H. Westsik, Jr., and T.M. Brouns, 2005, *Waste-Form Qualification Compliance Strategy for Bulk Vitrification*, PNNL-15048, Pacific Northwest National Laboratory, Richland, Washington.

DOE/RL-92-36, *Hanford Site Hoisting and Rigging Manual*, U.S. Department of Energy, Richland, Washington.

Fuller, P., 2004, *Hydraulic Fluid Compatibility with TraceTek Leak Detection System and Mini-Probe*, RPP-19524, Revision 1, CH2M HILL Hanford Group, Inc., Richland, Washington.

HNF-2962, *A List of EMI/EMC Requirements*, Revision 0, Numatec Hanford Corporation for Fluor Daniel Hanford, Inc., Richland, Washington.

HNF-SD-GN-ER-501, *Natural Phenomena Hazards, Hanford Site, Washington*, Revision 1B, Westinghouse Hanford Company, Richland, Washington.

IEC 61000-4-2, *Electromagnetic Compatibility (EMC) – Part 4-2: Testing and Measurement Techniques – Electrostatic Discharge Immunity Test*, International Engineering Consortium, Chicago, Illinois.

IEEE C62.41.1, *IEEE Guide on the Surge Environment in Low-Voltage (1000 V and Less) AC Power Circuits*, Institute of Electrical and Electronics Engineers, New York, New York.

IEEE C62.41.2, *IEEE Recommended Practice on Characterization of Surges in Low Voltage (1000 V and Less) AC Power Circuits*, Institute of Electrical and Electronics Engineers, New York, New York.

IEEE Std C37.90.2, *IEEE Standard for Withstand Capability of Relay Systems to Radiated Electromagnetic Interference from Transceivers*, Institute of Electrical and Electronics Engineers, New York, New York.

IEEE Std 141, *IEEE Recommended Practice for Electric Power Distribution for Industrial Plants*, Institute of Electrical and Electronics Engineers, New York, New York.

IEEE Std 142, *IEEE Recommended Practice for Grounding of Industrial and Commercial Power Systems*, Institute of Electrical and Electronics Engineers, New York, New York.

IEEE Std 242, *IEEE Recommended Practice for Protection and Coordination of Industrial and Commercial Power Systems*, Institute of Electrical and Electronics Engineers, New York, New York.

IEEE Std 519, *Recommended Practices and Requirements for Harmonic Control in Electrical Power Systems*, Institute of Electrical and Electronics Engineers, New York, New York.

IESNA HB-9, *IESNA Lighting Handbook*, 9th Edition, Illuminating Engineering Society of North America, New York, New York.

IP-2, *The 2003 Hose Handbook*, 7th Edition, Rubber Manufacturers of America, Washington, D.C.

ISO 668, *Series 1 Freight Containers Classification, Dimensions and Ratings*, International Organization for Standardization, Geneva, Switzerland.

ISO 1161, *Series 1 Freight Containers -- Corner Fittings -- Specification*, International Organization for Standardization, Geneva, Switzerland.

ISO 1496-2, *Series 1 Freight Containers –Specification and Testing – Part 2: Thermal Containers*, International Organization for Standardization, Geneva, Switzerland.

Leonard, M.W., 2004, *Interface Control Document Between the Demonstration Bulk Vitrification System (DBVS) [CH2M HILL Hanford Group, Inc.] and the Effluent Treatment Facility (ETF) [Fluor Hanford]*, Revision 0, CH2M HILL Hanford Group, Inc., Richland, Washington.

MSS SP-72, *Ball Valves with Flanged or Butt-Welding Ends for General Service*, Manufacturing Standardization Society of the Valve and Fittings Industry, Inc., Vienna, Virginia.

MSS SP-82, *Valve Pressure Testing Methods*, Manufacturing Standardization Society of the Valve and Fittings Industry, Inc., Vienna, Virginia.

NEMA MG-1, *Motors and Generators*, National Electrical Manufacturers Association, Rosslyn, Virginia.

NEMA MG-13, *Frame Assignments for Alternating-Current Integral-Horsepower Induction Motors*, National Electrical Manufacturers Association, Rosslyn, Virginia.

NFPA 70, *National Electrical Code®*, 2002 Edition, National Fire Protection Association, Quincy, Massachusetts.

SAE J429, *Mechanical and Material Requirements for Externally Threaded Fasteners*, Society of Automotive Engineers, Warrendale, Pennsylvania.

TFC-ENG-STD-06, *Design Loads for Tank Farm Facilities*, Revision A, CH2M HILL Hanford Group, Richland, Washington.

TFC-ENG-STD-21, *Hose-in-Hose Transfer Lines*, Revision A, CH2M HILL Hanford Group, Richland, Washington.

TFC-ESHQ-Q_C-C-03, *Control of Suspect Counterfeit Items*, Revision B, CH2M HILL Hanford Group, Richland, Washington.

TFC-PLN-09, *Human Factors Program*, Revision A-1, CH2M HILL Hanford Group, Richland, Washington.

UBC, 1997, *1997 Uniform Building Code*, International Conference of Building Officials, Whittier, California.

UL 142, *Standard for Safety-Steel Aboveground Tanks for Flammable and Combustible Liquids*, Underwriters Laboratories, Inc., Northbrook, Illinois.

UL 508A, *Standard for Industrial Control Panels*, Underwriters Laboratories, Inc., Northbrook, Illinois.

UL-listed, *Electrical Appliance and Utilization Equipment Directory*, Underwriters Laboratories, Inc., Northbrook, Illinois.

WAC 173-303-640, "Tank Systems," *Washington Administrative Code,* as amended.

This page intentionally left blank

APPENDIX A4

DRIED WASTE HANDLING SYSTEM

Calculation Number	Revision	Title	Page
145579-B-CA-011[a]	4	*Melt Area Support Structure*	A4-3
	N/A	Subcontractor Calculation Review Checklist	A4-1669
145579-D-CA-007	0	*Heat Transfer Analysis - AWTE*	A4-1671
	N/A	Subcontractor Calculation Review Checklist	A4-1847
145579-C-CA-011[b]	3	*Melt Area Support Structure & Foundation (Fdn #1)*	N/A

[a] This calculation in its entirety is available electronically from Garry Amidan, CH2M HILL Hanford Group, Inc. at (509) 373-9499.

[b]Calculation 145579-C-CA-011 has been reviewed by the IQRPE and was provided to Ecology for review in the foundation design package (05-TED-009, February 7, 2005, "Final Dangerous and Mixed Waste Research and Development and Demonstration Permit for Demonstration Bulk Vitrification Facility Required Submittal – Review of Foundation System.")

This page intentionally left blank.

amec

CALCULATION COVER SHEET

CALC. NO.: 145579-B-CA-011 REV: 4 DATE: October 12, 2005

CALC. TITLE: Melt Area Support Structure

PROJECT NO.: 145579 PROJECT TITLE: Final DBVS Design

Design Verification Required: ☐ Yes ☐ No

Calculation Type: ☐ Scoping ☐ Preliminary ☒ Final

Superseded by Calculation No.: _____ ☐ Voided

ORIGINAL AND REVISED CALCULATIONS/ANALYSIS APPROVAL

REV.	ORIGINATOR:	DATE:	CHECKED:	DATE:	APPROVED	DATE
0	Paul Meyer	19-Jan-05	Divana Whitley	19-Jan-05	Paul Meyer	19-Jan-05
1	Paul Meyer	26-Apr-05	Divana Whitley	26-Apr-05	John Stephens	26-Apr-05
2	Paul Meyer	08-Jun-05	Divana Whitley	08-Jun-05	Tony Heim	09-Jun-05
3	Paul Meyer	16-Aug-05	Lynda Sawatsky	17-Aug-05	Tony Heim	17-Aug-05
4	[signature]	12-oct-05	[signature]	12 Oct 05	[signature]	12-Oct-05

AFFECTED DOCUMENTS

DOCUMENT NUMBER:	TITLE:	REV. NO.:	DISC. LEAD INITIALS
F-145579-00-B-0005	Melt Area Structural Steel Plans and Details	H	P/A
F-145579-00-B-0006	Melt Area Structural Steel Elevations and Details	F	P/A
F-145579-00-B-0007	Melt Area – Grating & Floor Plate Layout	F	P/A
F-145579-00-B-0010	Melt Area – Structural Steel Stairs and Details	C	P/A
F-145579-00-B-0013	Melt Area – Structural Stl Connection Details	A	P/A
F-145579-00-B-0026	Melt Area – Structural Steel Connection Details	A	P/A

RECORD OF REVISION

REV. NO.	REASON FOR REVISION:
0	Issued for Construction
1	Revised to incorporate applicable IQRPE and CH2M comments made on Waste Dryer Support Structure steel design calculation 145579-B-CA-012 Rev 2, including addition of connection details and calculations. All attachments except #3 and #4 revised.
2	Assumption added to section 2.3 concerning small eccentricities in lightly loaded horizontal braces The following page replacements were made in attachments as noted: Attachment 1, page 24: Document reference corrected. Attachment 1, page 37: Cross references to attachment 9 added. Attachment 1, page 172: reference to UBC clause for non-concentric braces added. Attachment 1, page 200: Sketch corrected to show 1" thick steel gusset plate. Attachment 10, page 1: Note added indicating large blank space on page is intentional. Attachment 5, drawing F-145579-00-B-0005 updated to Rev G.: minor drafting errors corrected.
3	Attachment #11 added, providing design information for horizontal bracing connections. Drawing F-145579-00-B-0026 added to Attachment 5, showing horizontal bracing connections. Drawing F-145579-00-B-0005 in Attachment 5 revised to reference Drawing F-145579-00-B-0026. Drawing H-14-106789 added to Attachment 5 to provide location and concrete data for foundation.

amec

CALCULATION SHEET

CALC. NO.: 145579-B-CA-011 REV: 4 DATE: October 12, 2005

CALC. TITLE: Melt Area Support Structure

PROJECT NO.: 145579 PROJECT TITLE: Final DBVS Design

4	Attachment #1, page 172 revised. First sentence deleted as requested by Reviewer. Attachment #11, page 2 revised to add definitions of Fp Longitudinal and Fp Transverse. Attachment #11, page 4a added, providing more detailed explanation of methods as requested by Reviewer

ATTACHMENTS

DOCUMENT NUMBER/ID:	TITLE:	TOTAL PAGES
Attachment 1	Melt Area Support Structural Steel Calculations	287
Attachment 2	Melt Area Support Structural Steel Computer Design Input (STAAD-Pro)	30
Attachment 3	Melt Area Support Structural Steel Additional References	16
Attachment 4	Foundation Information Chart Showing Performance Category	1
Attachment 5	Melt Area Support Structure Drawings	17
Attachment 6	Melt Area Support Structural Steel Reactions (STAAD-Pro)	8
Attachment 7	Melt Area Support Structural Steel Node Displacement Report (STAAD-Pro)	75
Attachment 8	Melt Area Support Structural Steel Beam End Forces Envelope Report (STAAD-Pro)	44
Attachment 9	Melt Area Support Structural Steel Beam Force Detail Report (STAAD-Pro)	958
Attachment 10	Melt Area Support Structural Steel Dynamic Analysis (STAAD-Pro)	24
Attachment 11	Melt Area Support Structural Steel Horizontal Bracing Connection Design and Details	167

ORIGINATOR:	DATE:	CHECKER:	DATE:
Hoyon	OCT 12 2005	Diana Whitley	Oct 12/05

amec

CALCULATION SHEET

CALC. NO.:	145579-B-CA-011	REV:	4	DATE:	October 12, 2005
CALC. TITLE:	Melt Area Support Structure				
PROJECT NO.:	145579	PROJECT TITLE:	Final DBVS Design		

1 INTRODUCTION

1.1 Purpose

The purpose of this calculation is to determine/verify the member sizes for the Melt Area Support Structure (MASS) steel frames and platforms. Column loads developed in these calculations are used in the design of the Melt Area Support Structure Foundation, calculation 145579-C-CA-011.

1.2 Scope

The scope of this calculation includes gathering vendor loading and geometry data for mechanical equipment that will be supported by the structure. Where such information is not yet available, conservative estimates and calculations of self-weight and contents weight, plus any dynamic loadings, have been included. The resulting calculations for the design of the structural steel frame and platform flooring, including access, provide frame member sizes, geometry and details for any non-standard or seismically loaded-connections. The results are presented on included drawings and are complete with references to specifications and standards sheets.

2 BASIS

2.1 Design Inputs

The primary design input for this calculation is the attached structural steel drawings. This calculation determines the forces and stresses in the selected members when subject to site environmental loads (Natural Phenomena Hazards). The drawings are derived from an iterative process of selection, calculation and possible re-selection if members are found to be overstressed. This calculation includes verification of only the final member sizes selected.

Layout of the steel in the drawings is derived from Mechanical General Arrangements and the locations of supported equipment as shown in the 3-D computer model of the Melt Area.

Other design inputs include the mechanical equipment list which provides weight and size data, normally from vendor information where available. Where Vendor information is not available, the data provided in the equipment list has been conservatively estimated by the Mechanical designers. It is expected that actual equipment loads will be less than the estimated values. This expectation will be verified when final vendor information becomes available and remedial action taken, if required.

The provision of radiation shielding in the Melt Area Support Structure consists of steel plate floors above and below the AWTE level, and in the centre of the structure at the "waste bin" floor level.

2.2 Criteria

TFC-ENG-STD-06 Rev B-1, October 27, 2003.

The Melt Area Support Structure is Performance Category PC-2. This was provided at the March 11, 2004, design review meeting. The attached foundations chart (Attachment 4) was included in an e-mail from David Shuford CH2M Hill to John Stephens AMEC confirming the Performance Categories of SSCs.

Design Loads:

Loads on the structure are as provided in the Design Criteria TFC-ENG-STD-06, and as discussed below.

Dead Load: Includes self-weight of the structure and permanent equipment. Equipment weights have been determined by referencing Vendor data, or the Mechanical equipment list. Where information was not readily available, equipment weights were conservatively estimated by the mechanical designers using "worst case" scenarios.

A Mechanical allowance under floors of 50 psf maximum, 10 psf minimum as appropriate to give the worst effect for a given load combination.

amec

CALCULATION SHEET

CALC. NO.:	145579-B-CA-011	REV:	4	DATE:	October 12, 2005
CALC. TITLE:	Melt Area Support Structure				
PROJECT NO.:	145579	PROJECT TITLE:	Final DBVS Design		

Live Loads:

Floor loading of 100 psf – Floors must serve as "exit" paths.

Mass of top-off soil and dried waste

Seismic Loading: Zone 2B as defined in the UBC.

Wind, Snow and Ashfall loads are resisted by the pre-engineered weather enclosure, not the MASS. Weather enclosure design is not part of this calculation and will be provided by the Vendor of the Pre-engineered metal enclosure system.

Flood: the DBVS site is at elevation 663 feet and is not in any of the flood areas identified in HNF-SD-GN-ER-501 *Natural Phenomena Hazards, Hanford Site, Washington.* Flood loads may safely be ignored.

Groundwater Pressure: the DBVS site is at elevation 663 feet. The Geotechnical report notes that groundwater levels are approximately 300 feet below the ground surface. Groundwater pressure may safely be ignored.

Thermal: like any structure, the MASS is subjected to normal annual and daily temperature variations. It is not constrained from expansion or contraction by the pre-eng weather enclosure. The MASS shape is a simple rectangular framework, and no change in the basic geometry occurs due to thermal expansion or contraction. The ICV™ Box does not contact the MASS at any point, and it is our understanding that the temperature of the floor above the MASS will be at "safe-to-touch" temperatures. Thermal stresses will be small and may safely be ignored.

Concrete creep: the structure is all steel supported on a slab-on-grade foundation. Concrete creep stresses may safely be ignored.

Lightning: the entire DBVS site will have a grounding grid installed. Pigtails are provided from the grounding grid through the foundations for attachment to the supported structures, systems or components. Grounding calculations are not part of this calculation.

ORIGINATOR:	DATE:	CHECKER:	DATE:
Ian Moyer	OCT 12 2005	Dwane Whitley	Oct 12/05

amec

CALCULATION SHEET

CALC. NO.:	145579-B-CA-011	REV:	4	DATE:	October 12, 2005
CALC. TITLE:	Melt Area Support Structure				
PROJECT NO.:	145579	PROJECT TITLE:	Final DBVS Design		

2.3 Assumptions

1. The structural steel framing supporting the elevated bins and associated equipment is being designed in advance of final bin/equipment design and/or Vendor information. Bin and equipment dimensions and support points are defined, but precise connection details are not. The designer/supplier of the bins and equipment will ensure that the connection between the bins and equipment and the supporting steel frame is adequate to transmit all forces, both lateral and vertical, due to all design loads, including seismic. In some cases this may require field-welded connections.

2. The pre-engineered weather enclosure surrounding the melt area support steel will have no significant effect on the frame design, except to shield the frame from wind, snow and ashfall loads. The two structures are not connected in any structurally significant way.

3. The temperature of the AWTE floor and nearby structural steel will remain "safe-to-touch." This is a requirement for safe operation of the DBVS.

4. Horizontal braces with design loads less than 9 kips may have an eccentricity of up to 6 inches as detailed on drawing F-145579-00-B-0002. The moments caused by this eccentricity are small relative to the size of the columns in question and may safely be ignored. At all columns, there are beams framing in from at least two directions where such braces occur; the beneficial effects of the stiffening provided by the beam framing connections is conservatively ignored (by assuming pinned connections) but is similar in magnitude to the minor torsional moments caused by slightly eccentric lightly loaded braces.

amec

CALCULATION SHEET

CALC. NO.:	145579-B-CA-011	REV:	4	DATE:	October 12, 2005
CALC. TITLE:	Melt Area Support Structure				
PROJECT NO.:	145579	PROJECT TITLE:	Final DBVS Design		

3 REFERENCES

1. *Uniform Building Code*, 1997. International Conference of Building Officials, Whittier, California.
2. *ACI Manual of Concrete Practice*, 1997. American Concrete Institute, Farmington Hills, Michigan.
3. TFC-ENG-STD-06 Rev B-1, *Design Loads for Tank Farm Facilities,* Issued October 22, 2003 by CH2M Hill Hanford Group Inc. Hanford, Washington.
4. *Report of Geotechnical Engineering Services, Bulk Vitrification Process Partial DBVS Richland Washington*. April 2004. AMEC E&E Inc., Portland, OR.
5. HNF-SD-GN-ER-501 Rev 1B, *Natural Phenomena Hazards, Hanford Site, Washington*. As revised by ECN 672877, May 15, 2002. Numatec Hanford Company, Richland, Washington.
6. DOE-STD-1020-2002 *Natural Phenomena Hazards Design and Evaluation Criteria for Department of Energy Facilities* Jan 2002. U.S. Department of Energy, Washington, D.C.
7. *AISC Manual of Steel Construction – Allowable Stress Design*, 9th Edition 1989, 4th impression 9/00 American Institute of Steel Construction Chicago, Illinois.
8. *AISC Manual of Steel Construction Volume 2 Connections ASD/LRFD* 1992, American Institute of Steel Construction Chicago, Illinois.
9. 145579-G-LI-001 *DBVS Equipment List* Revision. G, October 15, 2004. Issued by AMEC Trail Mechanical Group for this project.
10. STAAD-Pro 2003, *Published by Research Engineers International,* Yorba Linda, California.

ORIGINATOR:	DATE:	CHECKER:	DATE:
[illegible]	2005-OCT-12	Dirona Whitley	Oct 12/05

amec

CALCULATION SHEET

CALC. NO.:	145579-B-CA-011	REV:	4	DATE:	October 12, 2005
CALC. TITLE:	Melt Area Support Structure				
PROJECT NO.:	145579	PROJECT TITLE:	Final DBVS Design		

4 METHODS

Frame dimensions have been determined based on a number of factors including:

- the overall size and mass of supported equipment, and bins,
- the relative locations of this equipment,
- the required interstorey height to suit equipment sizes, services running through the structure and derived structural frame sizes, and
- requirements for structural stiffness, limits of deflection, bracing geometry to suit access requirements while resisting seismic and gravity forces.

Mechanical general arrangements have been developed in conjunction with the development of the steel framing, but have not been certified as final. Final designs are dependent upon receipt of Vendor information. The primary steel support framing will not be affected by changes in Vendor details, as Vendors are required to supply equipment of certain sizes to fit on and within the primary steel structure.

Based on the derived and estimated weights of the structure, gravity and seismic forces on the structure have been calculated using the Tank Farm Facilities Design Loads and the methods prescribed in the Uniform Building Code.

Frame members have been selected for their suitability to support the calculated moments, shears, torsion, and axial forces and to comply with geometry restrictions. Analysis of the structure was completed following the AISC Service design method. The STAAD Pro for Windows release 2003 computer program was used, combined with hand-checking of members to verify the output.

The preparation, running and evaluation of the STAAD-Pro model for the steel frame is an iterative process. Preliminary member sizes are used to develop the computer model and to input loads. Loads are modelled floor level by floor level using the live and dead area loads as well as equipment loads, seismic, etc. Derivation of loads is provided in Attachment #1. These "raw" loads are input into the computer model of the structure. The designer then instructs the computer

ORIGINATOR:	DATE:	CHECKER:	DATE:
Ian Meyon	2005-OCT-12	Dinana Whitley	Oct 12/05

amec

CALCULATION SHEET

CALC. NO.:	145579-B-CA-011	REV:	4	DATE:	October 12, 2005
CALC. TITLE:	Melt Area Support Structure				
PROJECT NO.:	145579	PROJECT TITLE:	Final DBVS Design		

program to combine the loads in various combinations as required by the Uniform Building Code. The designer may also choose to evaluate other load combinations not required by Code, but which he believes are necessary to ensure the structure is capable of safely supporting all the forces it is likely to be subjected to.

The computer program uses standard engineering calculation methods to distribute loads and forces between the various members of the steel frame and ultimately determine the forces in each member due to the various load combinations. Once the various required load combinations have been evaluated, the designer can identify members that are overstressed (if any) which will be increased in size. The designer examines the column reactions derived by the computer program, based on the "raw" loads to verify that loads have been entered in the correct orientation and magnitude. The key advantage of the computer program is that it allows for a rapid means of determining the effects of the different load combinations on the overall structure and the determination of the reactions at the foundations.

Once the overall distribution of forces and the member end forces are determined using the computer program, an individual calculation is made for each steel member within the structure. These calculations take into account the specific loading conditions on each member, including point loads, slight variations in tributary width and any other special conditions. The member end forces from the computer run are combined with the calculated forces due to specific loading conditions and the total forces on the member are derived. These are then compared to the values derived by the computer program as a check. The maximum bending moment and axial forces in the members are combined and checked using a simple spreadsheet program. This calculates a total stress ratio for each member. Values of total stress ratio less than 1.00 meet the code requirements.

ORIGINATOR:	DATE:	CHECKER:	DATE:
[illegible]	2005-OCT-12	Dirona Whitley	Oct 12/05

CALCULATION SHEET

amec

CALC. NO.:	145579-B-CA-011	REV:	4	DATE:	October 12, 2005
CALC. TITLE:	Melt Area Support Structure				
PROJECT NO.:	145579	PROJECT TITLE:	Final DBVS Design		

5 RESULTS AND CONCLUSIONS

Structural steel framing suitable for the purpose of process equipment support and maintenance access has been designed. The design conforms to applicable DOE and UBC standards. Beam and column stress ratios are limited to less than 1.0. A value of 1.0 means that the effect of the factored loads on the member is equal to the allowable loads. Given the safety factors "built-in" to the Building Code, a value of 1.0 does not imply "just about to fail" but rather implies a design that meets the Code requirements and is completely safe. By limiting stress ratios to a value of less than 1.0, an additional margin of safety is obtained. The stress ratio of each beam and column is included with the calculation provided for each member.

The column with the highest stress ratio is column M1/Mb. It is a W14x53 section. Its maximum stress ratio is 0.35. See Attachment 1, page 155 of 287.

The beam with the highest stress ratio is at Elevation 705'-9". It is a W18x71 section. Its maximum stress ratio is 0.58. See Attachment 1, page 74 of 287.

The horizontal brace with the highest stress ratio is at elevation 695'-9". It is a WT5x11. Its maximum stress ratio is 0.68. See Attachment 1, page 124 of 287.

The vertical brace with the highest stress ratio is at grid M1. It is a WT6x22.5. Its maximum stress ratio is 0.83. See Attachment 1, page 169 of 287.

ORIGINATOR:	DATE:	CHECKER:	DATE:
Meyer	2005·OCT·12	Dirana Whitley	Oct 12/05

ENGINEERING	Document	TFC-ENG-DESIGN-C-10, REV A-14
	Page	17 of 25
ENGINEERING CALCULATIONS	Effective Date	February 16, 2006

Figure 4. Subcontractor Calculation Review Checklist.

Page 1 of 1

Subject: Melt Area Support Structure

The subject document has been reviewed by the undersigned.
The reviewer reviewed and verified the following items as applicable.

Documents Reviewed: 145579-B-CA-011, Revision 4

Analysis Performed By: AMEC

- Design Input
- Basic Assumptions
- Approach/Design Methodology
- Consistency with item or document supported by the calculation
- Conclusion/Results Interpretation
- Impact on existing requirements
- _____

Reviewer (printed name, signature, and date) M. I. Holm, Feb. 21, 2006.

Organizational Manager (printed name, signature and date) D. H. Shuford 2/21/06

Calculations reviewed had been added or revised between April 26, 2005 and February 16, 2006. Estimated weight of equipment will need to be reviewed when actual equipment is selected. 2-21-06

This page intentionally left blank.

CALCULATION SHEET

amec

CALC. NO.:	145579-D-CA-007	REV:	0	DATE:	February 20, 2006
CALC. TITLE:	Heat Transfer Analysis - AWTE				
PROJECT NO.:	145579	PROJECT TITLE:	Final DBVS Design		

Design Verification Required: ☐ Yes ☒ No

Calculation Type: ☐ Scoping ☐ Preliminary ☒ Final

Superseded by Calculation No.: _____ ☐ Voided

ORIGINAL AND REVISED CALCULATIONS/ANALYSIS APPROVAL

REV.	ORIGINATOR:	DATE:	CHECKED:	DATE:	APPROVED	DATE
A	G.J. for D. McCann	04-Apr-05	G.J. for S. Polegaj	04-Apr-05	Frank Sweet	04-Apr-05
B	J. Luey	24-Oct-05	K. McCracken	24-Oct-05	K. McCracken	24-Oct-05
C	J. Luey	02-Feb-06	K. McCracken	02-Feb-06	K. McCracken	02-Feb-06
0	J. Luey	20-Feb-06	K. McCracken	20-Feb-06	K. McCracken	20-Feb-06

AFFECTED DOCUMENTS

DOCUMENT NUMBER:	TITLE:	REV. NO.:	DISC. LEAD INITIALS

RECORD OF REVISION

REV. NO.	REASON FOR REVISION:
A	Issued for CH2M HILL Approval
B	Evaluate impact from ICV Box design changes.
C	Evaluate impact from AWTE design changes.
0	Incorporated Client Comments

ATTACHMENTS

DOCUMENT NUMBER/ID:	TITLE:	TOTAL PAGES
Attachment 1	Calculation 0509206.01-M-004: DBVS AWTE Thermal Load Inventory	160
Attachment 2	Bulk Vitrification Design Drawings	9
	TOTAL PAGE COUNT	173

Typed names/dates in this box indicate the calculation has been signed off/approved and the originals have been placed in the Project files.

ORIGINATOR:	DATE:	CHECKER:	DATE:
J. Luey	2/20/06	K. McCracken	2/20/06

CALCULATION SHEET

amec

CALC. NO.:	145579-D-CA-007	REV:	0	DATE:	February 20, 2006
CALC. TITLE:	Heat Transfer Analysis - AWTE				
PROJECT NO.:	145579	PROJECT TITLE:	Final DBVS Design		

1 INTRODUCTION

The Ancillary Waste Transfer Enclosure (AWTE) design concept has evolved from one in which operators did activities via glove ports through the enclosure walls to one that is more of an AWTE "room" in which operators will enter. The new AWTE concept will address operational issues with the prior design. This calculation utilizes conceptual drawings provided in Attachment 2 and evaluates projected heat loads within the AWTE and estimates required cooling that will need to be accounted for in the final AWTE design.

1.1 PURPOSE

A heating, ventilation and air conditioning (HVAC) system is to be designed to maintain the temperature in the AWTE at a level compatible with the components contained therein. At present, the AWTE room design temperature is 140°F (~60°C). This calculation estimates the thermal loads to this room contributed by the major components in the room, assuming the room temperature is maintained at 77°F (25°C) to allow for margin to protect components in the AWTE room. The thermal loads include the electrodes, electrode bus bar, material feed chutes, off-gas inlet and exhaust lines, and heat transfer through the AWTE floor from the ICV lid below.

1.2 SCOPE

This calculation determines the projected heat load into the AWTE from heat transferred to the AWTE floor (from the ICV lid located beneath the floor) and from heat transferred along the components that penetrate into the ICV lid from the AWTE (chutes and electrodes). Heat is transferred to the components through direct contact with the melt and radiation transfer from the melt.

2 BASIS

2.1 DESIGN INPUTS

Heat transfer model input specifics are discussed in Attachment 1 (Section 1.0).

2.2 ASSUMPTIONS

Assumptions requiring verification were not identified for this calculation. Conservative values have been selected for estimating the heat load to the AWTE.

Typed names/dates in this box indicate the calculation has been signed off/approved and the originals have been placed in the Project files.

ORIGINATOR:	DATE:	CHECKER:	DATE:
J. Phil Fry	2/20/06	D.R. McCracken	2/20/06

CALCULATION SHEET

amec

CALC. NO.:	145579-D-CA-007	REV:	0	DATE:	February 20, 2006
CALC. TITLE:	Heat Transfer Analysis - AWTE				
PROJECT NO.:	145579	PROJECT TITLE:	Final DBVS Design		

3 CRITERIA

1. AWTE air space is maintained at 77°F (25°C). Conservative to estimate heat load. Design temperature of AWTE components is 140°F (60°C), but target operating conditions should not be at this limit.
2. Material handling chutes are kept below 482°F (250°C). Engineering judgment to prevent potential for collecting low-melting point material on the chute surface.

4 REFERENCES

References are discussed in Attachment 1, Section 9.0.

5 METHODS

Calculation methods are discussed in Attachment 1, Appendices C through G.

6 RESULTS AND CONCLUSIONS

Table 1 from Attachment 1, AWTE Floor Cooling Capacity and Bottom Surface Temperature Sensitivity Analysis, is reproduced below. This analysis was performed to provide an estimate of the energy removal required to achieve a target temperature of 77°F (25°C) at the top surface of the AWTE floor.

Table 2 from Attachment 1, Component Heat Loads to the AWTE Air Space, is also reproduced below. Results in Table 2 summarize the analysis of the heat load contribution from the bus bar, exposed electrode segment, and material feed chute. The "unit" loads of each assembly included in the model are provided in this table, along with the number of units present. The total heat load to the AWTE is obtained by multiplying the unit loads with the number of units.

The model results indicate that the chute wall temperature in the lower portion of the material feed chute exceeds the desired 482°F (250°C) target. If a supplementary cooling capacity of 5 to 5½ kW (~1½ to 1¾ tons refrigeration) is applied to the chute wall in the vicinity of the chute penetration though the AWTE floor and off-gas hood port, the temperature of the chute wall can be reduced to below the 482°F (250°C) target.

Typed names/dates in this box indicate the calculation has been signed off/approved and the originals have been placed in the Project files.

ORIGINATOR:	DATE:	CHECKER:	DATE:
[illegible]	2/20/06	[illegible]	2/20/06

CALCULATION SHEET

amec

CALC. NO.: 145579-D-CA-007 REV: 0 DATE: February 20, 2006

CALC. TITLE: Heat Transfer Analysis - AWTE

PROJECT NO.: 145579 PROJECT TITLE: Final DBVS Design

Table 1 - AWTE Floor Cooling Capacity and Bottom Surface Temperature Sensitivity Analysis

Assumed Hood Temperature [°C]	AWTE Floor Cooling Requirement		AWTE Floor Bottom Surface Temperature [°C]
	[kW]	[tons refrigeration]	
570	372	106	43
500	266	76	38
450	205	60	35
400	155	45	33
350	115	33	31

Table 2 - Component Heat Loads to the AWTE Air-Space(1).

Component	"Unit" Heat Load to the AWTE (kW)	Number of units	Total Component AWTE Heat Load (kW)	Total Component AWTE Heat Load (tons refrig.)
Bus Bar/Clamp Assy.	0.25	2	½	0.14
Exposed Electrode Segment	12½	2	25	7.14
Material Feed Chute	10	5	50	14.28
Off-Gas Inlet Line	2½	1	2½	0.71
Off-Gas Exhaust Line	2½	1	2½	0.71
		Total	~80½	~23

Note: (1) Heat loads from the off-gas hood to the AWTE floor are handled by the AWTE floor cooling system. Therefore, there is no net heat load from the off-gas hood to the AWTE air-space.

As seen by comparing the estimated cooling requirements in Tables 1 and 2, the heat load from the ICV lid to the AWTE floor is the dominant contributor. If this intermediate cooling is not provided, the heat load into the AWTE air space will increase. The specific design load for the AWTE Floor cooling system may be lowered if excess cooling is provided in the AWTE Air Space.

Typed names/dates in this box indicate the calculation has been signed off/approved and the originals have been placed in the Project files

ORIGINATOR: DATE: 2/20/06 CHECKER DATE: 2/20/06

CALCULATION SHEET

amec

CALC. NO.:	145579-D-CA-007	REV:	0	DATE:	February 20, 2006
CALC. TITLE:	Heat Transfer Analysis - AWTE				
PROJECT NO.:	145579	PROJECT TITLE:	Final DBVS Design		

Attachment 1
DBVS AWTE Thermal Load Inventory: 0509206.01-M-004 Revision 1
(160 pages including Attachment Cover)

ARES CORPORATION	CALCULATION COVER SHEET	Page No. 1 of 159 Calculation No: 0509206.01-M-004

Project No.	Project Title:	Client:
0509206.01	DBVS Thermal Analysis Authorization	AMEC/DMJMH+N

Title:
DBVS AWTE Thermal Load Inventory

Purpose and Objective:

A heating, ventilation and air conditioning (HVAC) system is to be designed to maintain the temperature in the Ancillary Waste Transfer Enclosure (AWTE) at a level compatible with the components contained therein. At present, the AWTE room design temperature is 140°F (~60°C). This calculation estimates the thermal loads to this room contributed by the major components in the room, assuming the room temperature is maintained at 77°F (25°C). The thermal loads include those arising from the electrodes, electrode bus bar, material feed chutes, off-gas inlet and exhaust lines, and heat transfer through the AWTE floor resulting form the high operating temperature of the off-gas hood. The AWTE air-space HVAC and the AWTE floor cooling systems will be designed by others.

Rev. No.	Total Pages	Revision Description (Add Continuation Sheet If Required)	Prepared By Name/Date	Checked By Name/Date	PM/TL Approval/Date
0	99	Original	P.S. Lowery	S.R. Pierce	S.R. Pierce
1	159	Revised to include additional heat loads to AWTE & to incorporate CHG comments	P.S. Lowery PSLowery 2/17/06	S.R. Pierce 2/19/06	S.R. Pierce 2/19/06

Calculation Cover Sheet: QAP 3.1, Rev. 6 (11-15-05)

CALCULATION REVIEW CHECKLIST

Project No.	Calculation No.	Rev.	Page No.
0509206.01	0509206.01-M-004	1	2 of 159

Items Checked	Accept Y	Accept N	Accept N/A	Initial/Date
1. Cover sheets properly completed.	✓			SDP 2/19/06
2. Calc sheet headers complete with calc no, rev, etc.	✓			
3. Calc sheet contents complete per format.	✓			
4. Listed attachments included.	✓			
5. Calc objective clearly described.	✓			
6. Criteria are suitable and properly referenced to task specific documents.	✓			
7. Assumptions and input data described and attached or referenced to task documents.	✓			
8. Calc method identified and appropriate for the design activity.	✓			
9. Calc results reasonable and correctly described in results and conclusions.	✓			
10. Computer program identified with version and revision.			✓	
11. Computer input/output provided or referenced.			✓	
12. Computer run traceable to calculation (file #, etc.).			✓	
13. Computer input data within permissible design input range.			✓	
14. Computer program validation/verification addressed.			✓	

Discrepancies / Comments:

Checker (Print Name and Sign):	Date:
S.R. Pierce	2/19/06
Originator (Print Name and Sign):	Date:
P.S. Lowery	2/17/06

Signatures obtained only after discrepancies are corrected and comments are resolved.

Calculation Review Checklist: QAP 3.1, Rev. 6 (11-15-05)

ARES CORPORATION	CALCULATION SHEET		
Project No. 0509206.01	Calculation No. 0509206.01-M-004	Rev. No. 1	Page No. 3 of 159
Title: DBVS AWTE Thermal Load Inventory			
Prepared By: P.S. Lowery	Date: 2.14.06	Checked By: S.R. Pierce	Date: 2.15.06

Table of Contents

1.0 INTRODUCTION 5
2.0 ELECTRODE BUS BAR JOULE HEAT DISSIPATION 6
3.0 ELECTRODE SURFACE HEAT DISSIPATION TO THE AWTE 8
4.0 MATERIAL FEED CHUTE HEAT DISSIPATION TO THE AWTE 9
5.0 OFF-GAS INLET LINE HEAT LOAD TO THE AWTE 12
6.0 OFF-GAS EXHAUST LINE HEAT LOAD TO THE AWTE 14
7.0 AWTE FLOOR HEAT LOAD FROM THE OFF-GAS HOOD 17
8.0 CONCLUSIONS 18
9.0 REFERENCES 20

APPENDICES

Appendix A
DMJM H+N Statement of Work and Correspondence with DMJM H+N

Appendix B
Graphite Electrode and off-gas exhaust line insulation
Property Data TransmittalS

Appendix C
Mathcad Model to Estimate the Temperature Distribution and Heat Loss Off the Exposed Electrode Surfaces in the AWTE

Appendix D
Mathcad Model to Estimate the Temperature Distribution and Heat Loss Off the Exposed Material Feed Chute Surfaces in the AWTE

Appendix E
Mathcad Model to Estimate the Temperature Distribution and Heat Loss Off the off-gas inlet line in the AWTE

Appendix F
Mathcad Model to Estimate the Temperature Distribution and Heat Loss Off the off-gas exhaust line in the AWTE

Appendix G
Mathcad Model to Estimate the Temperature Distribution and Heat load from the off-gas hood to the Awte floor

ARES CORPORATION	CALCULATION SHEET		
Project No. 0509206.01	Calculation No. 0509206.01-M-004	Rev. No. 1	Page No. 4 of 159
Title: DBVS AWTE Thermal Load Inventory			
Prepared By: P.S. Lowery	Date: 2.14.06	Checked By: S.R. Pierce	Date: 2.15.06

Figures

Figure 1. Schematic Diagram of the DBVS ICV™ Electrode Bus Bar and Clamp Assembly. 6
Figure 2. Connected Material Feed Chute – Section View. 10
Figure 3. Overall Elevation View of the Material Feed Chute (Post-Vitrification Configuration) 11
Figure 4. Elevation view of the off-gas line in the vicinity of its penetration through 13
the AWTE floor and off-gas hood. 13
Figure 5. Elevation view of the off-gas inlet line run in the AWTE 14
Figure 6. Elevation view of the off-gas exhaust line in the vicinity of its penetration through 15
the AWTE floor and off-gas hood. 15
Figure 7. Elevation view of the off-gas exhaust line run in the AWTE 16

Tables

Table 1. AWTE floor cooling capacity and bottom surface temperature sensitivity analysis 18
Table 2. Component heat loads to the AWTE air-space[1] 19

Acronyms

acfm	actual cubic feet per minute
AWTE	Ancillary Waste Transfer Enclosure
DBVS	Demonstration Bulk Vitrification System
Gr	Grashof Number
HVAC	Heating, Ventilation, and Air Conditioning
ICV™	In Container Vitrification
Pr	Prandtl Number

ARES CORPORATION	CALCULATION SHEET		
Project No. 0509206.01	Calculation No. 0509206.01-M-004	Rev. No. 1	Page No. 5 of 159
Title: DBVS AWTE Thermal Load Inventory			
Prepared By: P.S. Lowery	Date: 2.14.06	Checked By: S.R. Pierce	Date: 2.15.06

1.0 INTRODUCTION

The Ancillary Waste Transfer Enclosure (AWTE) is located directly over the BulkVit ICV™ box during processing. It is separated from the BulkVit processing container by a 3½" steel plate floor and a 2½" to 4½" air-space. There are a number of penetrations in the AWTE floor. These penetrations provide access to the ICV™ box for a number of major system components. Among these are the:

- electrodes (2);
- material feed chutes (5); and
- ICV™ hood off-gas inlet and exhaust piping.

This calculation addresses the heat loads to the AWTE air-space from the Joule heat associated with passage of current to the electrodes through the electrode copper bus bars, the exposed surfaces of the two electrodes, the exposed surfaces of the material feed chutes, and the off-gas inlet and exhaust lines. As specified in the statement of work (ref. 1 & Appendix A), this analysis assumes no active cooling in the AWTE. **The heat load from the off-gas hood through the AWTE floor and into the AWTE air-space is handled by the AWTE floor cooling system. Therefore, the off-gas hood does not directly contribute a net heat load to the AWTE air-space. The AWTE floor cooling capacity required to offset the heat load emanating from the off-gas hood is included in this calculation.**

The electrodes penetrate through the AWTE floor and into the melt contained in the ICV™ box. The material feed chutes provide conduits through which the waste feed is transferred to the top surface of the melt during processing. As such, these components are exposed to the very high temperatures of the ICV™ internals throughout processing.

Boundary conditions for the problem are provided in Ref. 1, 9, 11 and 12 (for QA purposes, copies of these references are provided in Appendices A and B). These boundary conditions are:

- melt surface temperature is 1922°F (1050°C);
- off-gas hood panels are assumed to be at their design temperature (570°C);
- off-gas air-space plenum temperature is 875°F (~470°C); and
- design current to the electrodes is 4000A.

During discussions with engineers at Meier Enterprises (Ref. 10) the suggestion was made that the upper-bound temperature for a number of components in the AWTE air-space is 140°F (~60°C). However, to provide a conservatively high estimate of the heat load to the AWTE air-space, a low temperature is assumed for the AWTE air-space, 77°F (25°C).

The design temperature for the off-gas hood and associated structures is 570°C. For conservatism, this temperature was assumed for the air-space between the off-gas hood and AWTE floor. For additional conservatism in the AWTE air-space heat load calculations, the bottom surface of the AWTE floor (the surface exposed to the ICV™ off-gas hood) was also assumed to be 570°C. The temperature for the off-gas inlet air was assumed to be 50°C (corresponding to operating during a very hot summer day).

ARES CORPORATION	CALCULATION SHEET		
Project No. 0509206.01	Calculation No. 0509206.01-M-004	Rev. No. 1	Page No. 6 of 159
Title: DBVS AWTE Thermal Load Inventory			
Prepared By: P.S. Lowery	Date: 2.14.06	Checked By: S.R. Pierce	Date: 2.15.06

The Joule heat dissipated in the electrode bus bar is addressed in Section 2.0. The energy dissipated to the AWTE through the exposed electrode stems is considered in Section 3.0. Section 4.0 covers the heat transfer and temperature distribution in the material feed chute and the corresponding heat transfer to the AWTE. Section 5.0 addresses the heat load to the AWTE air-space from the off-gas inlet line. Section 6.0 addresses the heat load to the AWTE air-space from the off-gas exhaust line. Section 7.0 addresses the cooling capacity required to handle the heat load associated with heat transfer from the off-gas hood to the AWTE floor such that the top surface of the floor is maintained at 77°F. Section 8.0 provides a summary of the results and tabulation of the constituent AWTE heat loads.

2.0 ELECTRODE BUS BAR JOULE HEAT DISSIPATION

Figure 1 provides a schematic drawing of the electrode bus bar and clamp assemblies. Detailed dimensions are provided in the drawings listed in Ref. 2. The bus bar is nominally ¾" thick by 8" wide. The overall length of the bar, from the connection with the power supply cables to the electrode contactor is approximately 9'-1¼". The bus bar is constructed of copper. A nominal copper electrical resistivity of 1.8μΩ·cm was obtained from Ref. 3.

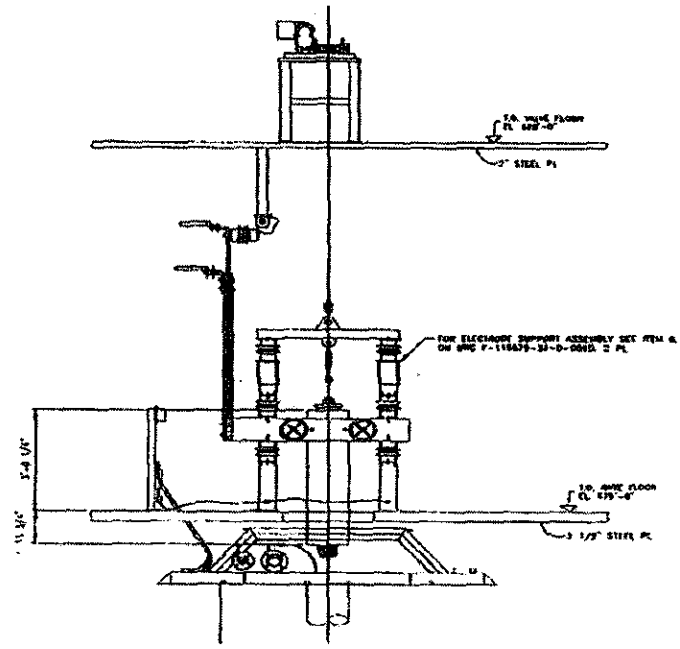

Figure 1. Schematic Diagram of the DBVS ICV™ Electrode Bus Bar and Clamp Assembly.

ARES CORPORATION	CALCULATION SHEET		
Project No. 0509206.01	Calculation No. 0509206.01-M-004	Rev. No. 1	Page No. 7 of 159
Title: DBVS AWTE Thermal Load Inventory			
Prepared By: P.S. Lowery	Date: 2.14.06	Checked By: S.R. Pierce	Date: 2.15.06

With this information, the bus bar electrical resistance and heat load is computed as follows:

Assume that each bus bar passes the design limit of 4000A (Ref. 11)

Copper electrical resistivity ...

$\rho_{Cu} := 1.8 \times 10^{-6} \Omega \cdot cm$ (CRC HCP, 56th Ed, p E-84)

Buss bar dimensions are ...

$t := 0.75in$

$w := 8in$

$L := 9ft + 1.25in$

$L = 2.775m$

Resistance ...

$R := \rho_{Cu} \cdot \frac{L}{w \cdot t}$ or $R = 1.29 \times 10^{-5} \Omega$

With a current of ...

$I := 4000A$

The Joule heat power dissipated is ...

$P := I^2 \cdot R$ or $P = 206.457W$

There are two bus bar arrangements in the AWTE. Therefore the total heat load is ...

$P_{tot} := 2 \cdot P$ or $P_{tot} = 413 W$

Rounding this up a bit yields ...

$P_{round} := 0.5kW$

ARES CORPORATION	CALCULATION SHEET		
Project No. 0509206.01	Calculation No. 0509206.01-M-004	Rev. No. 1	Page No. 8 of 159
Title: DBVS AWTE Thermal Load Inventory			
Prepared By: P.S. Lowery	Date: 2.14.06	Checked By: S.R. Pierce	Date: 2.15.06

3.0 ELECTRODE SURFACE HEAT DISSIPATION TO THE AWTE

Figure 1 provides a sketch of the electrode configuration inside the AWTE. The dimensions in this figure, combined with the dimensions provided in the schematic included in Appendix A indicate that the overall length of the exposed portion of the electrode is approximately 6'. The bottom 30" of this length is located in the ICV™ off-gas hood, from the top of the melt surface to the penetration in the off-gas hood. The electrode passes through the 4½" air-space between the off-gas hood and bottom surface of the AWTE floor. It then passes through the 3½" thick steel plate making-up the AWTE floor. The uppermost 36" resides in the AWTE.

Convection, conduction, and radiation heat transfer between the electrode and its surroundings is modeled in this analysis. Joule heat dissipation in the electrode resulting from passing 4000A is also included in this analysis. The MathCad software package is used to set-up and solve the governing system of equations and associated input data (Ref. 4). The complete MathCad model of this system is provided in Appendix C. For the purposes of this analysis, the temperature of the bottom surface of the modeled electrode segment (the face in contact with the melt surface) is set at 1350°C. The top surface of the melt is set at 1050°C. The off-gas plenum air-space is set at 875°F. Since the bulk flow speeds within the off-gas hood are relatively low, convection heat losses from the surface of the electrode are modeled using a natural convection correlation for the convection heat transfer coefficient, assuming turbulent conditions (i.e. – $Gr \cdot Pr > 10^9$). This correlation is provided in Ref. 5. The exterior surface of the electrode "sees" a melt surface at a temperature of 1050°C, and ICV™ hood and box surfaces at 570°C. This latter temperature is based upon design conditions for the off-gas hood and appurtenances. The temperature in the region between the top of the off-gas hood and the lower surface of the AWTE floor is also assumed to be 570°C for conservatism. The AWTE air-space and upper surface of the AWTE floor are assumed to be at a temperature of 77°F (25°C).

This calculation assumes no active cooling in the AWTE. Therefore, the correlation for natural convection heat transfer described above is again used to compute the convective heat transfer coefficient for the electrode surfaces exposed to the AWTE. An emissivity of 0.7 is used to represent the electrode and melt surfaces in the model. The emissivity of the hood surfaces is set at a value of 0.85. These values are consistent with the values used in the Ref. 6 calculation. Radiation configuration factors were computed and/or obtained from the relationships provided in Ref. 7. The thermal and electrical conductivity of the electrode was obtained from vendor data. Appendix B provides a copy of this vendor transmittal supplying this information. The upper-bound value of 230 W/m-°C is used in this analysis. An electrical resistivity value of 210 μΩ·in was used for the Joule heat calculations (reference provided in Appendix B).

As the MathCad model presented in Appendix C indicates, the 72" length of electrode stem is broken-up into 3" segments. The temperature distribution in this representation of the electrode is obtained by solution of a system of coupled, non-linear equations, each equation representing an energy balance on each of the 24 segments of the model. A 25th electrode "element" is used to represent losses off the top surface of the electrode.

The results obtained from this model indicate that the electrode temperature decreases from a value of 1350°C at the electrode-melt surface interface, to a value of approximately 310°C at its top surface inside the AWTE.

The temperature and heat dissipation profiles computed for the electrode are presented in Appendix C. These results indicate that the overall heat loss to the AWTE is approximately 12½ kW per electrode.

4.0 MATERIAL FEED CHUTE HEAT DISSIPATION TO THE AWTE

The dimensions and configuration data for the DBVS ICV™ material feed chutes are obtained from the drawings provided in Ref. 8. Relevant portions of these drawings are reproduced here in Figures 2 and 3. The drawings indicate that, during melt operations, the material feed chute protrudes through the ICV™ off-gas hood approximately 2½". The chute extends from its penetration in the off-gas hood, up through the AWTE floor, through the AWTE air-space, and out the "valve floor" which comprises the ceiling of the AWTE. The lower ~1' section of the chute, where it extends from the off-gas hood through the AWTE floor, is nominally 12¾" in diameter. The remaining portions of the chute are composed of 8" diameter tubing. The wall thickness of the chute is 0.148". For the purposes of this analysis, the entire length of the chute is modeled using the 8" diameter dimension. Moreover, the rather complicated double-wall configuration in the vicinity of the penetration through the AWTE floor is represented with the 8" diameter dimension as well.

Convection, conduction, and radiation heat transfer between the chute and its surroundings are modeled in this analysis. The complete MathCad model of this system is provided in Appendix D. For the purposes of this analysis, the temperature of the top surface of the melt is set at 1050°C. The off-gas plenum air-space is set at 875°F. Since the flow velocities within the off-gas hood are relatively low, convection heat losses from the surface of the electrode are modeled using a natural convection correlation for the convection heat transfer coefficient, assuming turbulent conditions (i.e. – $Gr \cdot Pr > 10^9$). This correlation is provided in Ref. 5. The AWTE air-space and upper surface of the AWTE floor are assumed to be at a temperature of 77°F.

The temperature distribution along the ~12' length of chute extending from the penetration in the off-gas hood to the AWTE ceiling is represented by discretizing the chute into 1' segments. The steel walls of the chute are modeled in each segment, as is the column of air contained within the chute. Both convection and radiation heat transfer from the external surfaces of the chute to the AWTE surroundings are modeled in this analysis. Conduction heat transfer in the steel walls along the length of the chute from one chute segment to its adjoining segments is also modeled. Convection heat transfer between the interior surfaces of the chute walls to the air column within is modeled.

The off-gas plenum temperature is nominally 875°F; the AWTE room temperature is nominally 77°F. Since the chute is relatively long, and much of it is exposed to the cooler temperature of the AWTE environment, it is likely that a "chimney flow" will develop within the chute due to the relative density difference of the air over this temperature range. A simple model was developed using a Boussinesq approximation to estimate the flow associated with the density difference. This is estimated using the relation obtained from a simplified version of the axial momentum equation …

$$\frac{1}{2}\bar{\rho}\frac{du^2}{dz} = (\rho_{77°F} - \rho_{875°F})g$$

ARES CORPORATION	**CALCULATION SHEET**		
Project No. 0509206.01	Calculation No. 0509206.01-M-004	Rev. No. 1	Page No. 10 of 159
Title: DBVS AWTE Thermal Load Inventory			
Prepared By: P.S. Lowery	Date: 2.14.06	Checked By: S.R. Pierce	Date: 2.15.06

Assuming air properties apply, this model suggests that a mass flow rate of approximately 0.2 kg/sec could be developed in this chute. In actuality, the chute is closed-off at its upper end. As a consequence, the hot gases rising in the chute will be balanced with a corresponding downwash of relatively cooler air. For conservatism however, when the chimney effect is modeled, it is assumed to occur as if the rising gases travel up the chute in single-pass fashion. To help put this effect in perspective, the analysis is also performed when this feature is turned-off.

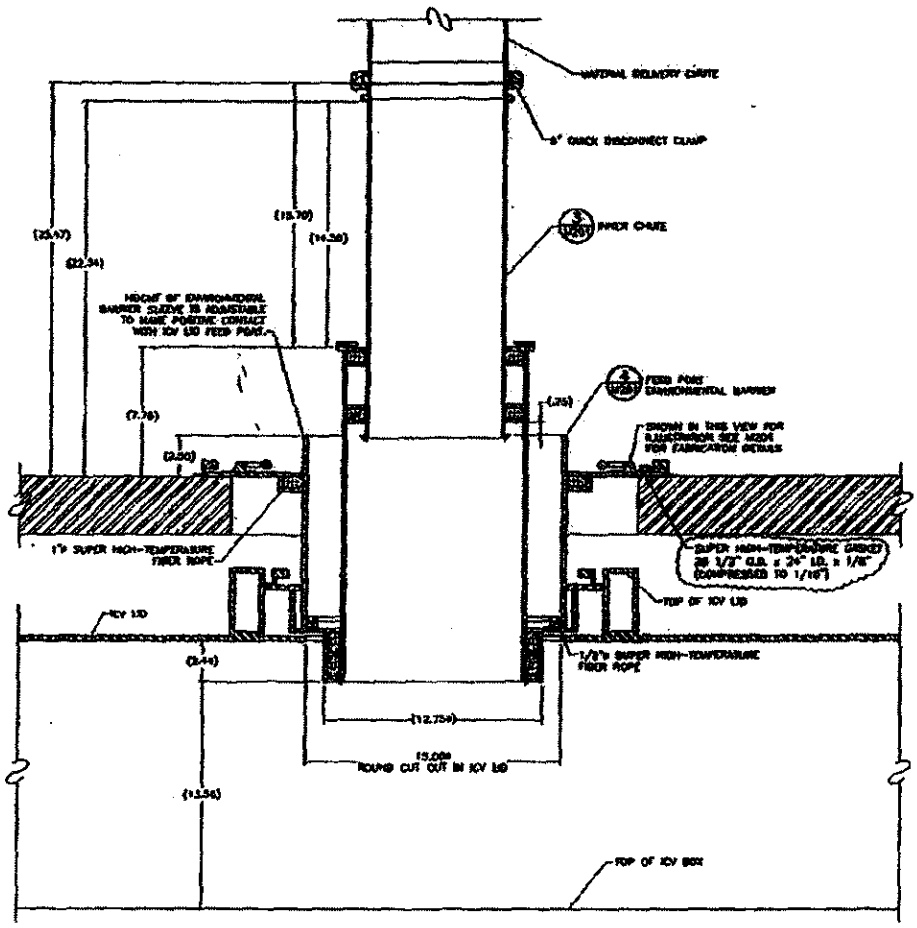

Figure 2. Connected Material Feed Chute – Section View.

Calculation Sheet: QAP 3.1 Rev. 6 (11-15-05)

ARES CORPORATION	CALCULATION SHEET		
Project No. 0509206.01	Calculation No. 0509206.01-M-004	Rev. No. 1	Page No. 11 of 159
Title: DBVS AWTE Thermal Load Inventory			
Prepared By: P.S. Lowery	Date: 2.14.06	Checked By: S.R. Pierce	Date: 2.15.06

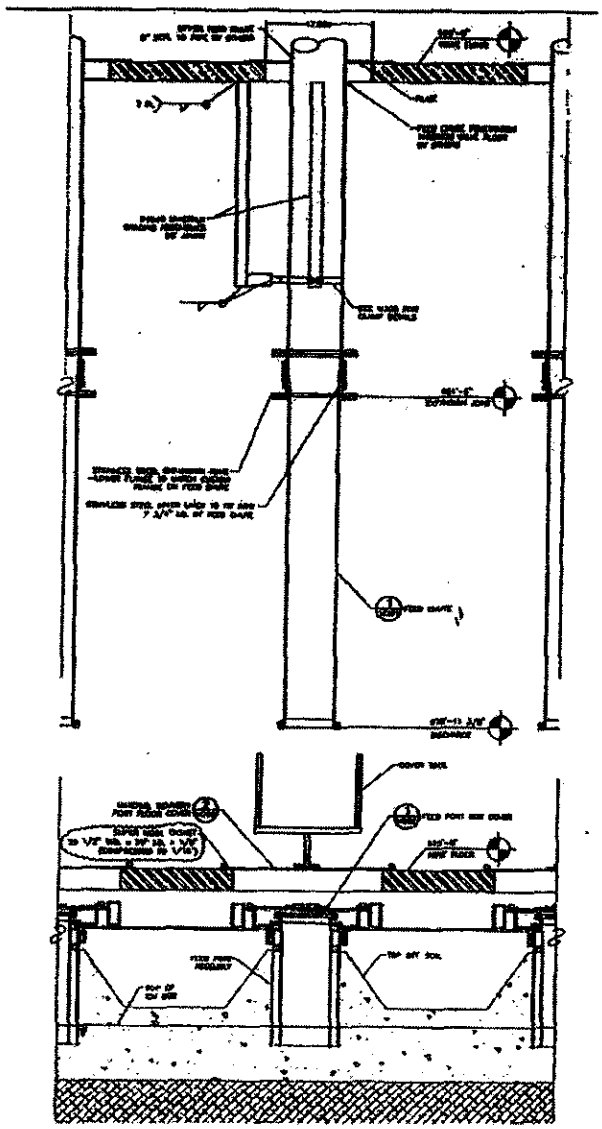

Figure 3. Overall Elevation View of the Material Feed Chute (Post-Vitrification Configuration).

Calculation Sheet: QAP 3.1, Rev. 6 (11-15-05)

ARES CORPORATION	CALCULATION SHEET		
Project No. 0509206.01	Calculation No. 0509206.01-M-004	Rev. No. 1	Page No. 12 of 159
Title: DBVS AWTE Thermal Load Inventory			
Prepared By: P.S. Lowery	Date: 2.14.06	Checked By: S.R. Pierce	Date: 2.15.06

The coupled system of non-linear equations arising from performing an energy balance on each model segment used to represent the material feed cute and associated air column is solved using MathCad. The complete model and system of equations is presented in Appendix D. The results obtained from this model, for the case when the chimney effect is included, indicate that the steel walls of the chute range in temperature from approximately 484°C near the connection with the off-gas hood, down to approximately 168°C near the AWTE ceiling. The temperature of the air column contained within the chute is essentially uniform over the entire length, at a temperature of approximately 450°C – very nearly equal to the 470°C temperature in the off-gas plenum. For this case, the radiative and convective losses to the AWTE are ~10 kW per chute. For comparison, when the chimney effect is not included in the analysis, the chute temperatures range from 482°C down to 25°C. The temperature in the air column inside the chute spans a similar range – from 480°C to 25°C. The heat losses from the chute's external surfaces to the AWTE air-space are computed to be approximately 5 kW per chute for this scenario, approximately half that realized when an approximation of the chimney effect is included.

It is desired to maintain the chute wall temperatures below 250°C to preclude partial-melting of the feedstock and consequent potential cake and blockage issues. As the results indicate, for most of the chute run, the wall temperature is below this value – even when the chimney effect is included. However, the temperature of the chute walls is well above this level in the vicinity of the penetration through the off-gas hood. Therefore, a supplementary means of cooling the chute in this region will be required. In order to estimate the magnitude of cooling required, the model includes a feature to extract a prescribed quantity of power from each ring-segment used to represent the chute. In this analysis, the cooling "load" is adjusted for the bottom segment of the model until a chute wall temperature of approximately 250°C is obtained. For the case wherein the chimney effect is included (a condition that is not quite consistent with ongoing material feed operations), the analysis indicates that, without supplementary cooling, the lowermost chute segment is approximately 484°C. The segment immediately above this lowermost one is at 260°C. The other segments of the model indicate chute wall temperatures below 250°C. If a supplementary cooling feature is employed to remove 4.3 kW from the lower segment, the maximum chute wall temperature is below 250°C for the entire length of the chute. When the chimney effect is not included in the model, the lower most chute segment is still approximately 482°C without supplementary cooling. For this case however, a supplementary energy removal rate of 4 kW applied to the lowermost chute segment results in chute wall temperatures below 250°C over its entire length.

5.0 OFF-GAS INLET LINE HEAT LOAD TO THE AWTE

The dimensions and configuration data for the DBVS ICV™ off-gas inlet line are obtained from the drawings provided in Ref. 8. Relevant portions of these drawings are reproduced here in Figures 4 and 5. The drawings indicate that, during melt operations, the off-gas inlet line protrudes through the ICV™ off-gas hood approximately 2½". The line extends from its penetration in the off-gas hood, up through the AWTE floor, through the AWTE air-space, and out an AWTE side wall. The off-gas inlet line is composed of 4" diameter tubing. The wall thickness of the chute is 0.237". The line is not insulated. The line draws ambient air into the off-gas hood. The temperature of this inlet air is assumed to be 50°C, corresponding to operating during a hot summer day. An off-gas inlet volumetric flow rate of 115 acfm was modeled (Appendix A).

ARES CORPORATION	CALCULATION SHEET		
Project No. 0509206.01	Calculation No. 0509206.01-M-004	Rev. No. 1	Page No. 13 of 159
Title: DBVS AWTE Thermal Load Inventory			
Prepared By: P.S. Lowery	Date: 2.14.06	Checked By: S.R. Pierce	Date: 2.15.06

Convection, conduction, and radiation heat transfer between the inlet line and its surroundings are modeled in this analysis. The complete MathCad model of this system is provided in Appendix E. For the purposes of this analysis, the temperature of the top surface of the melt is set at 1050°C. The off-gas plenum air-space is set at 875°F. Since the flow velocities within the AWTE are relatively low, convection heat losses from the surface of the inlet line are modeled using a natural convection correlation for the convection heat transfer coefficient, assuming turbulent conditions (i.e. – $Gr \cdot Pr > 10^9$). This correlation is provided in Ref. 5. The AWTE air-space and upper surface of the AWTE floor are assumed to be at a temperature of 77°F.

The temperature distribution along the ~18' length of inlet line extending from the penetration in the off-gas hood through the AWTE wall penetration is represented by discretizing the chute into 18" segments. The steel walls of the chute are modeled in each segment, as is the column of air contained within the chute. Both convection and radiation heat transfer from the external surfaces of the chute to the AWTE surroundings are modeled in this analysis. Conduction heat transfer in the steel walls along the length of the chute from one chute segment to its adjoining segments is also modeled. Convection heat transfer between the interior surfaces of the chute walls to the inlet air flow within is modeled.

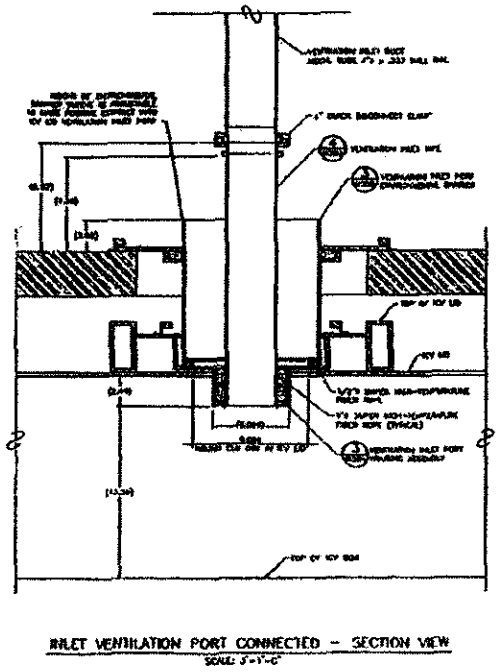

Figure 4. Elevation view of the off-gas line in the vicinity of its penetration through the AWTE floor and off-gas hood.

ARES CORPORATION	CALCULATION SHEET		
Project No. 0509206.01	Calculation No. 0509206.01-M-004	Rev. No. 1	Page No. 14 of 159
Title: DBVS AWTE Thermal Load Inventory			
Prepared By: P.S. Lowery	Date: 2.14.06	Checked By: S.R. Pierce	Date: 2.15.06

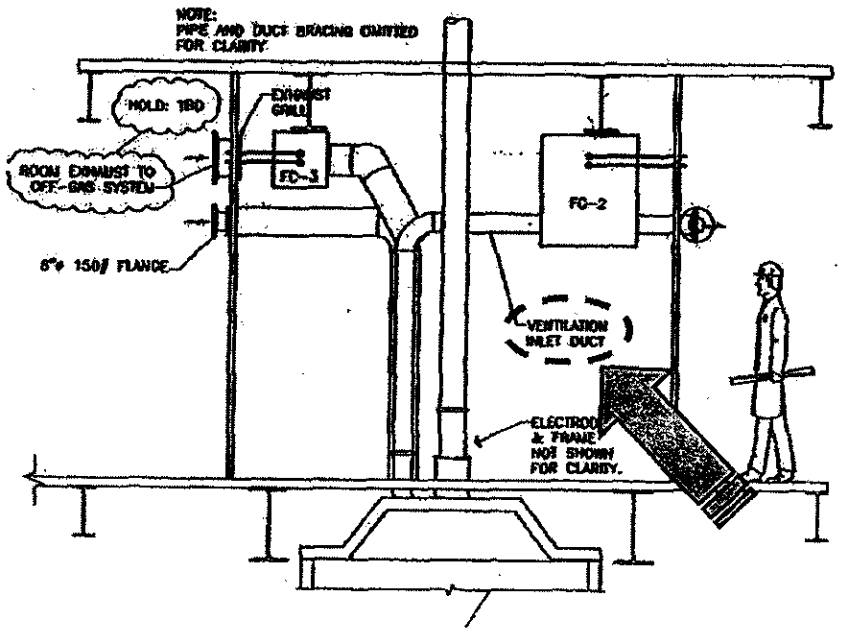

Figure 5. Elevation view of the off-gas inlet line run in the AWTE.

The coupled system of non-linear equations arising from performing an energy balance on each model segment used to represent the off-gas inlet line and associated air column is solved using MathCad. The complete model and system of equations is presented in Appendix E. The results obtained from this model indicate that the steel walls of the inlet line range in temperature from approximately 415°C near the connection with the off-gas hood, down to approximately 43°C near the AWTE side wall penetration. The convective and radiative losses to the AWTE air-space are ~2½ kW.

6.0 OFF-GAS EXHAUST LINE HEAT LOAD TO THE AWTE

The dimensions and configuration data for the DBVS ICV™ off-gas exhaust line are obtained from the drawings provided in Ref. 8. Relevant portions of these drawings are reproduced here in Figures 6 and 7. The drawings indicate that, during melt operations, the off-gas exhaust line protrudes through the ICV™ off-gas hood approximately 2½". The line extends from its penetration in the off-gas hood, up through the AWTE floor, through the AWTE air-space, and out an AWTE side wall. The off-gas inlet line is composed of 6" diameter tubing. The wall thickness of the chute is 0.280". The line draws hot off-gases generated during

ARES CORPORATION	CALCULATION SHEET		
Project No. 0509206.01	Calculation No. 0509206.01-M-004	Rev. No. 1	Page No. 15 of 159
Title: DBVS AWTE Thermal Load Inventory			
Prepared By: P.S. Lowery	Date: 2.14.06	Checked By: S.R. Pierce	Date: 2.15.06

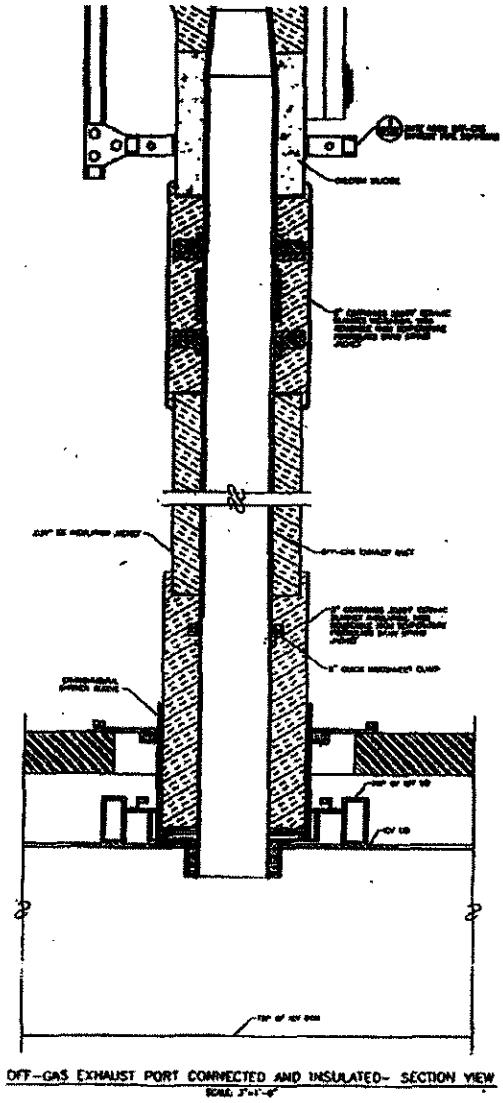

Figure 6. Elevation view of the off-gas exhaust line in the vicinity of its penetration through the AWTE floor and off-gas hood.

Calculation Sheet: QAP 3.1, Rev. 6 (11-15-05)

ARES CORPORATION	CALCULATION SHEET		
Project No. 0509206.01	Calculation No. 0509206.01-M-004	Rev. No. 1	Page No. 16 of 159
Title: DBVS AWTE Thermal Load Inventory			
Prepared By: P.S. Lowery	Date: 2.14.06	Checked By: S.R. Pierce	Date: 2.15.06

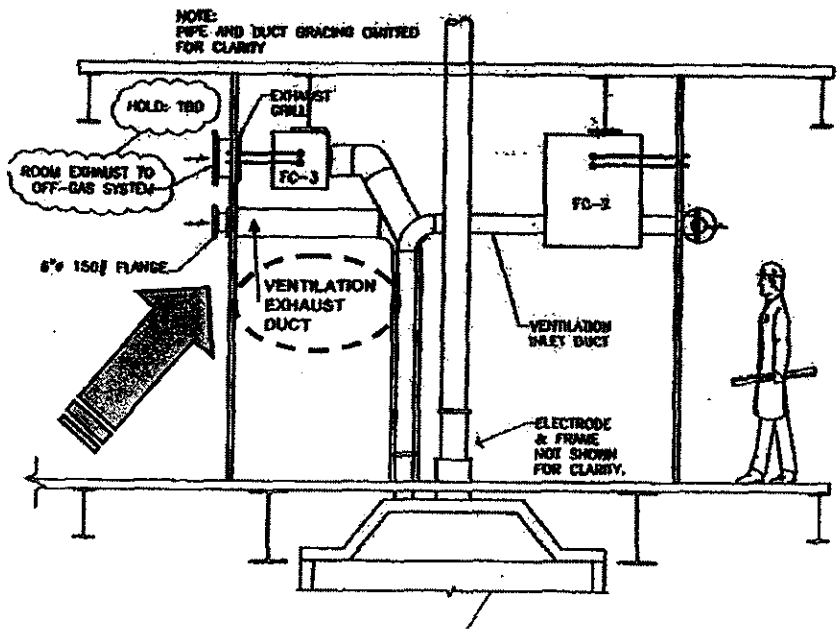

Figure 7. Elevation view of the off-gas exhaust line run in the AWTE.

processing from the off-gas hood. The temperature of this exhaust air is assumed to be 875°F (~470°C) per the flow sheet provided in Appendix A. The off-gas exhaust volumetric flow rate is 406 acfm (per Appendix A process flow sheet). The entire length of the exhaust line located inside the AWTE is wrapped with a 2" thick insulation blanket (or better), enclosed in a stainless steel jacket (Cotronics data sheet, Appendix B).

Convection, conduction, and radiation heat transfer between the exhaust line and its surroundings are modeled in this analysis. The complete MathCad model of this system is provided in Appendix F. For the purposes of this analysis, the temperature of the top surface of the melt is set at 1050°C. The off-gas plenum air-space is set at 875°F. Since the flow velocities within the AWTE are relatively low, convection heat losses from the surface of the exhaust line are modeled using a natural convection correlation for the convection heat transfer coefficient, assuming turbulent conditions (i.e. – $Gr \cdot Pr > 10^9$). This correlation is provided in Ref. 5. Convection heat transfer from the hot off-gas exhaust to the inner surfaces of the exhaust line are modeled using a Nusselt number corresponding to turbulent tube flow. The AWTE air-space and upper surface of the AWTE floor are assumed to be at a temperature of 77°F.

The temperature distribution along the ~18' length of exhaust line extending from the penetration in the off-gas hood through the AWTE wall penetration is represented by discretizing the chute into 18" segments. The steel walls of the chute are modeled in each segment, as is the column of air contained within the chute. Both convection and radiation heat transfer from the external surfaces of the chute to the AWTE surroundings are

modeled in this analysis. Conduction heat transfer in the steel walls along the length of the chute from one chute segment to its adjoining segments is also modeled. Convection heat transfer between the interior surfaces of the chute walls to the exhaust air flow within is modeled.

The coupled system of non-linear equations arising from performing an energy balance on each model segment used to represent the off-gas exhaust line and associated air column is solved using MathCad. The complete model and system of equations is presented in Appendix F. The results obtained from this model indicate that the steel walls of the exhaust line range in temperature from approximately 800°C near the connection with the off-gas hood, down to approximately 440°C near the AWTE side wall penetration. The temperatures on the exterior surface of the exhaust line insulation jacket range from ~130°C near its connection with the off-gas hood, down to ~90°C at the AWTE sidewall penetration. The convective and radiative losses to the AWTE air-space are ~2½ kW.

7.0 AWTE FLOOR HEAT LOAD FROM THE OFF-GAS HOOD

A simplified model of the heat exchange between the off-gas hood and AWTE floor was developed. The model incorporates the effects of radiation heat transfer from the off-gas hood to the bottom surface of the AWTE floor. The temperature of the off-gas hood is assumed to be at its design limit, 570°C. The heat transferred to the bottom surface of the AWTE is either convected back to the air space between the off-gas hood and AWTE floor (assumed to be at a temperature equal to the average of the off-gas hood and AWTE floor bottom surface temperatures), or it is conducted to the top surface of the AWTE floor. The temperature of this surface is assumed to be 77°F. The heat transferred by conduction through the AWTE floor is to be removed by a supplementary AWTE floor cooling system so that the 77°F AWTE floor upper surface can be maintained.

The MathCad model generated for this analysis is provided in Appendix G. The results of this analysis indicate that the temperature of the bottom surface of the AWTE floor is 43¼°C. With the top surface at 77°F (25°C), this results in a net heat transfer by conduction through the 3½" steel floor of 372 kW (~106 tons refrigeration). This energy transfer must be handled by the AWTE floor cooling system.

Table 1 provides the results for the AWTE floor cooling load and bottom surface temperature for a number of assumed hood surface temperatures. These results provide a means to evaluate the sensitivity of the results to changes in this parameter.

Table 1. AWTE floor cooling capacity and bottom surface temperature sensitivity analysis.

AWTE Hood Temperature [°C]	AWTE Floor Cooling Requirement		AWTE Floor Bottom Surface Temperature [°C]
	[kW]	[tons refrigeration]	
570	372	106	43
500	266	76	38
450	205	60	35
400	155	45	33
350	115	33	31

8.0 CONCLUSIONS

Computer models are generated to estimate the temperature distribution and associated heat losses off the major components housed within the AWTE. These include the electrode bus bar and contactor assembly, the portion of the electrodes exposed to the AWTE environment, the material feed chutes and the off-gas inlet and exhaust lines. The heat load emanating from the elevated temperatures of the off-gas hood and delivered to the AWTE air-space by conduction through the AWTE floor is also estimated in this analysis. The results presented herein assume that this heat load will be handled by a separate cooling system located in the AWTE floor. Therefore, this load is not transmitted to the AWTE air-space.

The results obtained from the analysis of the bus bar, exposed electrode segment, material feed chutes, and off-gas inlet and exhaust lines are summarized in Table 2 below. The "unit" loads of each assembly modeled are provided in this table, along with the number of units present. The total heat load to the AWTE is obtained by multiplying the unit loads by the number of units. This total load is also presented in Table 2.

The model results indicate that the chute wall temperature in the lower portion of the material feed chute exceeds the desired 250°C limit. If a supplementary cooling system is employed to remove 4 to 4½ kW (~1¼ tons refrigeration) from the chute wall in the vicinity of the chute penetration through the AWTE floor and off-gas hood port, the temperature of the chute wall can be reduced to below the 250°C target. This cooling capacity represents the energy that must be removed from the chute. It does not account for inefficiencies in the chute cooling system employed for this purpose.

A separate analysis of the energy exchange between the off-gas hood and AWTE floor was performed to provide an estimate of the energy removal capacity required to maintain the top surface of the AWTE floor at the target 77°F. The results of this analysis indicated that, when the off-gas hood temperature is at its design limit of 570°C, the AWTE floor cooling system must be capable of removing 372 kW (~106 tons refrigeration) in order to maintain this AWTE top surface temperature. This energy removal capacity does not include the effects of thermal inefficiencies in the energy removal process. Of course, lowering the hood temperatures

results in a corresponding reduction in the required AWTE floor cooling capacity. The results presented in Table 1 above illustrate the relationship between these parameters.

Table 2. Component heat loads to the AWTE air-space[1].

Component	"Unit" Heat Load to the AWTE (kW)	Number of units	Total Component AWTE Heat Load (kW)	Total Component AWTE Heat Load (tons refrig.)
Bus Bar/Clamp Assy.	0.25	2	½	0.14
Exposed Electrode Segment	12½	2	25	7.14
Material Feed Chute	10	5	50	14.28
Off-Gas Inlet Line	2½	1	2½	0.71
Off-Gas Exhaust Line	2½	1	2½	0.71
		Total	~80½	~23

Note: (1) Heat loads from the off-gas hood to the AWTE floor are handled by the AWTE floor cooling system. Therefore, there is no net heat load from the off-gas hood to the AWTE air-space. The AWTE floor cooling system load is discussed in Section 7.0.

As the results in Table 2 indicate, the largest contributor to the AWTE air-space heat load derives from the five material feed chutes. The results presented in this table reflect the case when the "chimney effect" is modeled. If this effect is neglected, the contribution to the AWTE air-space heat load is reduced roughly in half, to 5 kW per chute. Incorporating this into the inventory list would result in an overall reduction in heat load to the AWTE air-space of 55 kW (~ 16 tons refrigeration).

ARES CORPORATION	CALCULATION SHEET		
Project No. 0509206.01	Calculation No. 0509206.01-M-004	Rev. No. 1	Page No. 20 of 159
Title: DBVS AWTE Thermal Load Inventory			
Prepared By: P.S. Lowery	Date: 2.14.06	Checked By: S.R. Pierce	Date: 2.15.06

9.0 REFERENCES

1. DMJM H+N Amendment to Consulting Agreement No. A77977-CA-003, Rev. 3. January 25, 2006.
2. AMEC drawings:
   - Draft F-145579-34-D-0004, Rev. G, "AWTE Floor – Electrode Cable Clamp Installation"
   - Draft F-145579-34-D-0012 thru -0016, Rev. A, "AWTE Floor – Electrode Cable Clamp"
3. Handbook of Chemistry and Physics, 56th Edition, 1975, CRC Press, Inc.
4. MathCad 2001i, Mathsoft Engineering & Education, Inc., 2001.
5. Holman, J.P., Heat Transfer, 3rd Edition, 1972, McGraw-Hill Publishing Company.
6. ARES Calculation 0509206.01-M-002, Rev. 0, "DBVS Off-Gas Hood Thermal Analysis."
7. Siegel, Robert and J.R. Howell, Thermal Radiation Heat Transfer, 3rd Edition, 1992. Hemisphere Publishing Company.
8. Thompson Mechanical Inc. drawings:
   - # F-145579-D-SP-017-M-101, Rev. G, "AWTE ICV Box Lid Material Feed Port," 1/25/06.
   - # F-145579-D-SP-017-M-102, Rev. G, "AWTE ICV Box Lid Inlet & Exhaust Ports," 1/25/06.
9. Email, Ja-Kael Luey to PS Lowery, "Outline of Work Scope for ICV Box Lid Calculation," dated 11.23.05 @ 13:51.
10. Personal Communication, PS Lowery (ARES) with Steve Strecker (Meier), 1.27.06 @ 09:30.
11. Email, Jerid Mauss to Pat Lowery, "FW: Amp Draw for Electrodes", dated 02/14/06 @ 08:14.
12. Email, Jerid Mauss to Pat Lowery, "FW: Scanned from MFP-00E53240 02/13/2006 12:03", dated 2/13/06 @ 17:05.

ARES CORPORATION	CALCULATION SHEET		
Project No. 0509206.01	Calculation No. 0509206.01-M-004	Rev. No. 1	Page No. 21 of 159
Title: DBVS AWTE Thermal Load Inventory			
Prepared By: P.S. Lowery	Date: 2.14.06	Checked By: S.R. Pierce	Date: 2.15.06

APPENDIX A

DMJM H+N STATEMENT OF WORK
AND
CORRESPONDENCE WITH DMJM H+N

ARES CORPORATION	CALCULATION SHEET		
Project No. 0509206.01	Calculation No. 0509206.01-M-004	Rev. No. 1	Page No. 22 of 159
Title: DBVS AWTE Thermal Load Inventory			
Prepared By: P.S. Lowery	Date: 2.14.06	Checked By: S.R. Pierce	Date: 2.15.06

Lisa Chambers

From: Renner, Jean C. (Jean.Renner@dmjmhn.aecom.com)
Sent: Wednesday, January 25, 2006 3:40 PM
To: Lisa Chambers
Cc: Renner, Jean C.
Subject: Amendment and NTP Revision
Attachments: ARES A77977-NTP-006 Rev. 2.pdf; ARES A77977-CA-003 Rev. 3 Amendment.pdf

Hi Lisa,
Attached is a Rev. 3 Amendment to our Consulting Agreement and a Rev. 2 NTP. Please obtain Bob's signature and return – thank you!

Jean Renner, Manager
Contracts & Operations Support
DMJMH Technology
3250 Port of Benton Boulevard
MSIN H5-50
Richland, WA 99354-1670
Email: Jean.Renner@dmjmhn.aecom.com
Direct: 509-375-9773
Main: 509-375-7774
Cell:: 509-947-6929
Fax: 509-375-5331

The information in this e-mail is intended only for the individual(s) or entity to whom it is addressed. This e-mail may contain confidential or privileged information and should not be disclosed to third parties. If you are not the intended recipient you must not use, disclose, disseminate, copy, or print its contents to prevent any liability.

1/25/2006

ARES CORPORATION	CALCULATION SHEET		
Project No. 0509206.01	Calculation No. 0509206.01-M-004	Rev. No. 1	Page No. 23 of 159
Title: DBVS AWTE Thermal Load Inventory			
Prepared By: P.S. Lowery	Date: 2.14.06	Checked By: S.R. Pierce	Date: 2.15.06

01/25/2006 15:45 IPAX → Jean Renner 001/002

DMJM H+N

3250 Port of Benton Blvd.
Richland, Washington 99354-1670
Phone: 509.372.7774
Fax: 509.375.5515

Amendment to Consulting Agreement
Page 1 of 2

Agreement No:	A77977-CA-003	Date:	January 25, 2006
Amendment No:	Rev. 3		

This AMENDMENT is made and entered into as of the 25th day of January, 2006, by and between DMJM H&N, Inc., 515 South Flower Street, Los Angeles, California 90071, a California corporation (hereinafter referred to as "DMJM H&N") having a principal place of business at 3250 Port of Benton Boulevard, Richland, Washington, 99354-1670, and ARES Corporation, 1100 Jadwin Avenue, Suite 400, Richland, Washington, 99352 (phone 509-946-3300, fax 509-946-6005) (hereinafter referred to as "CONSULTANT"); jointly referred to as the "PARTIES."

AGREEMENT

The parties hereby amend the Agreement as follows:

- Add the following work scope:

The design of the Ancillary Waste Transfer Enclosure (AWTE) is being performed by Thompson Mechanical and has evolved to a concept that is different from that contained on current DBVS drawings. Input provided to Thompson Mechanical for thermal loads was based on AMEC calculation 145579-D-CA-007 Heat Transfer Analysis. This basis calculation looked at the ICV lid and AWTE as an integrated assembly and performed an analysis to determine temperatures at various locations. The work scope is based on the following activities:

- Review the conceptual design drawings for the AWTE from Thompson.
- Using the conceptual drawings and configuration in the ICV box, develop an analysis approach that can be used to determine the temperature of the feed chutes that pass through the AWTE. Baseline configuration would be defined as no active cooling in the AWTE.
- With the baseline configuration, determine the heat load that needs to be removed from the AWTE air space to achieve a chute wall temperature below 250°C. The basis for this value will need to be confirmed by AMEC E&E; the issue we discussed today was "melting" of feed material constituents in the line which will lead to plugging.
- Anticipated boundary conditions include:
  - Melt surface temperature of 1050°C (this may be one variable that is adjusted to determine sensitivity).
  - Top of floor surface temperature of XX (Determine from current analysis for lid; may change based on melt surface).
  - Ambient air outside AWTE of 115°F.
  - Melt operating temperature of 1300°C (needed to determine conduction along the electrode assembly).

CALCULATION SHEET

Project No. 0509206.01	Calculation No. 0509206.01-M-004	Rev. No. 1	Page No. 24 of 159
Title: DBVS AWTE Thermal Load Inventory			
Prepared By: P.S. Lowery	Date: 2.14.06	Checked By: S.R. Pierce	Date: 2.15.06

Pat Lowery

From: Luey, Ja-Kael [Ja-Kael.Luey@dmjmhn.aecom.com]
Sent: Wednesday, November 23, 2005 1:51 PM
To: Pat Lowery
Cc: John Garfield; Luey, Ja-Kael; Frederickson, Jim; McCracken, Kurt J.; Renner, Jean C.
Subject: Outline of Work Scope for ICV BOx Lid Calculation
Attachments: Configuration for Calculation.pdf; Input Drawings.pdf

Pat,

One of my action items from our meeting yesterday with Mike Leonard was to provide you with guidance for the ICV Box Lid calculation. Please find below a description of desired work scope for which a quote is requested.

Let me know if I have adequately addressed your questions for clarification with regards to this calculation.

Ja-Kael

GENERAL

1. Formal calculation per ARES procedures. Expectation is for same checking and software validation as performed for ARES Calculation No. 0513206.01-M-001.
2. Assume that an initial meeting to discuss boundary conditions will be held for AMEC E&E, CH2M HILL, and DMJM H&N to concur with model set-up.
3. Assume calculation will be reviewed by AMEC E&E, DMJM H&N, and CH2M HILL in parallel.
4. Assume meeting to resolve comments for final calculation issue.
5. Calculation will be transmitted to DMJM H&N for distribution to reviewers.

CALCULATION

1. Purpose of the calculation is to determine the temperature of the ICV Box lid.
2. Scope: Condition to be evaluated is when the glass surface level is closest to the ICV Box lid. See attached file for configuration to be considered. As noted the figure, the temperature above the steel plate floor is a variable boundary condition. Three cases are to be evaluated for the AWTE Air Space: 1) T = 77F, 2) T = 250F, and T = 400F. For these conditions the temperature of the ICV Box Lid and steel plate floor are of interest (this will guide the design of any needed cooling above the steel floor to achieve a target lid temperature).
3. Assumptions: Attached is a file with input drawings. These drawings are to guide the development of the model. Simplifying assumptions for this calculation include treating the lid as a single surface without the penetrations and treating floor as a single plane without penetrations. A statement as to the impact from these assumptions is expected in the calculation (i.e., whether the results are, or are not, conservative by not including the added components and associated thermal transfer). As needed, state other assumptions made for the calculation.
4. Methodology: State method and approach used.
5. Results and Conclusions: As appropriate.
6. Software Validation and Verification: Provide as appropriate.

1/31/2006

CALCULATION SHEET

Project No. 0509206.01	Calculation No. 0509206.01-M-004	Rev. No. 1	Page No. 25 of 159
Title: DBVS AWTE Thermal Load Inventory			
Prepared By: P.S. Lowery	Date: 2.14.06	Checked By: S.R. Pierce	Date: 2.15.06

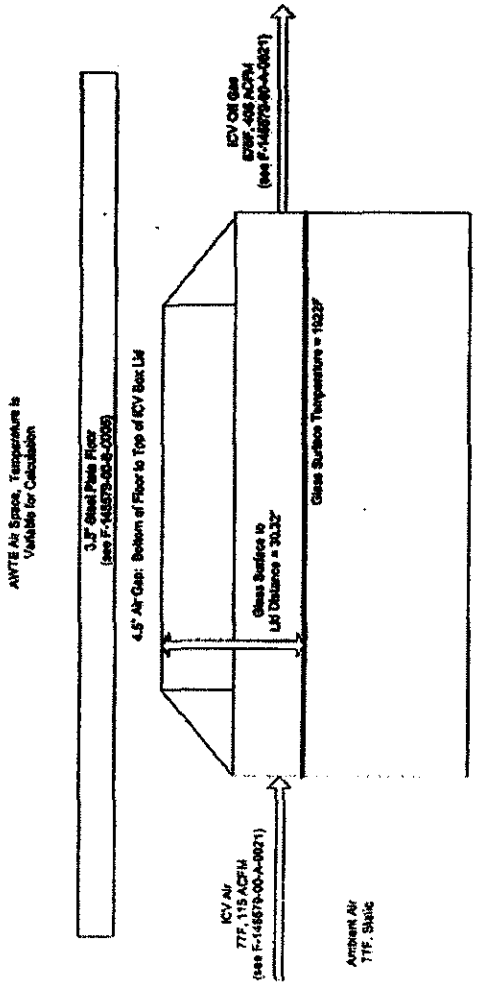

Calculation Sheet: QAP 3.1, Rev. 6 (11-15-05)

ARES CORPORATION	CALCULATION SHEET		
Project No. 0509206.01	Calculation No. 0509206.01-M-004	Rev. No. 1	Page No. 26 of 159
Title: DBVS AWTE Thermal Load Inventory			
Prepared By: P.S. Lowery	Date: 2.14.06	Checked By: S.R. Pierce	Date: 2.15.06

APPENDIX B

GRAPHITE ELECTRODE AND OFF-GAS EXHAUST LINE INSULATION

PROPERTY DATA TRANSMITTALS

CALCULATION SHEET

Project No. 0509206.01	Calculation No. 0509206.01-M-004	Rev. No. 1	Page No. 27 of 159
Title: DBVS AWTE Thermal Load Inventory			
Prepared By: P.S. Lowery	Date: 2.14.06	Checked By: S.R. Pierce	Date: 2.15.06

Page 1 of 1

Pat Lowery

From: CBittner@superiorgraphite.com
Sent: Friday, January 27, 2006 10:47 AM
To: Pat Lowery
Subject: Re: Electrode Property Data

210-230 W/(K-m)

Thanks,

Chris

Superior Graphite Co.
Office/Cell (630) 842-3453
Customer Service #'s
ARK (800) 800-1855
Desulco (800) 325-0337

"Pat Lowery" <plowery@arescorporation.com>
01/26/2006 03:39 PM

To <cbittner@superiorgraphite.com>
cc
Subject Electrode Property Data

Chris --

Okay. Here's my email address. Again, I'm looking for thermal property data on the graphite electrodes AMEC plans to use for their BulkVit plant. I'm not sure of the grade of graphite they're specifying (or if that matters to you). What I need is data like the thermal conductivity (units of Watts/m-°C, say), density (kg/m^3, say), and so forth. I'm not so interested in the mechanical data (like the coef. of thermal expansion), though if you have that data, it will likely come in handy for our structural guys.

Thanks again for your help.

Pat Lowery
ARES Corporation
509.946.3300 [W]
509.946.6006 [F]
509.554.1951 [C]

1/31/2006

CALCULATION SHEET

Project No. 0509206.01	Calculation No. 0509206.01-M-004	Rev. No. 1	Page No. 28 of 159
Title: DBVS AWTE Thermal Load Inventory			
Prepared By: P.S. Lowery	Date: 2.14.06	Checked By: S.R. Pierce	Date: 2.15.06

Pat Lowery

From: Mauss, Jerid [Jerid.Mauss@amec.com]
Sent: Monday, February 13, 2006 5:05 PM
To: Pat Lowery
Subject: FW: Scanned from MFP-00E53240 02/13/2006 12:03

Attachments: electrode data.pdf

electrode data.pdf
(33 KB)

Pat,

The value we should be using is 21 x 10 E-5 ohm-in.

Thanks,
Jerid Mauss

-----Original Message-----
From: Zeithaml, William

Sent: Monday, February 13, 2006 5:01 PM
To: Mauss, Jerid; plowery@arescorporation.com
Subject: RE: Scanned from MFP-00E53240 02/13/2006 12:03

The Superior graphite web site gives the Specific Electrical Resistance of the GRP electrodes as follows:

5.5 E-6 ohm-meters to 7.4 E-6 ohm-meters.

The Superior graphite cut sheet that came with some electrodes we purchased for use at HRTS gives the Specific Resistance Longitudinal for 12" electrodes as

21 E-5 ohm-inches

The conversion shows that these two values are equal and that the value is about 21 E-5 ohm-inches.

Specific Electrical Resistance is also know as resistivity.

Resistance = Resistivity x Length / Area.

The resistance of a 36" long, 12" diameter electrode is therefore

21e-5 oh-in x 36 in / 113 in2 = 6.7 e -5 ohm total

This does not compare very well with the value that is handwritten on the attached pdf (.009 ohm). I do not know where .00025 ohm/in came from unless the person that wrote it misunderstood the units and it was supposed to be .00025 ohm-in. Then everything would make sense.

-----Original Message-----
From: Mauss, Jerid

ARES CORPORATION	CALCULATION SHEET		
Project No. 0509206.01	Calculation No. 0509206.01-M-004	Rev. No. 1	Page No. 29 of 159
Title: DBVS AWTE Thermal Load Inventory			
Prepared By: P.S. Lowery	Date: 2.14.06	Checked By: S.R. Pierce	Date: 2.15.06

Sent: Monday, February 13, 2006 2:17 PM
To: Zaithaml, William
Subject: FW: Scanned from MFP-00E53240 02/13/2006 12:03

-----Original Message-----
From: Pat Lowery [mailto:plowery@arescorporation.com]
Sent: Monday, February 13, 2006 12:40 PM
To: Nauss, Jerid
Subject: FW: Scanned from MFP-00E53240 02/13/2006 12:03

Jerid -

Here's the data sheet I have ...

Pat

-----Original Message-----
From: Richland Copier [mailto:Richlandcopier@arescorpoation.com]
Sent: Monday, February 13, 2006 12:04 PM
To: Pat Lowery
Subject: Scanned from MFP-00E53240 02/13/2006 12:03

Scanned from MFP-00E53240.
Date: 02/13/2006 12:03
Pages:1
Resolution:200x200 DPI

The information contained in this e-mail is intended only for the individual or entity to whom it is addressed.

Its contents (including any attachments) may contain confidential and/or privileged information.

If you are not an intended recipient you must not use, disclose, disseminate, copy or print its contents.

If you receive this e-mail in error, please notify the sender by reply e-mail and delete and destroy the message.

CALCULATION SHEET

Project No. 0509206.01	Calculation No. 0509206.01-M-004	Rev. No. 1	Page No. 30 of 159
Title: DBVS AWTE Thermal Load Inventory			
Prepared By: P.S. Lowery	Date: 2.14.06	Checked By: S.R. Pierce	Date: 2.15.06

Pat Lowery

From: Mauss, Jerid [Jerid.Mauss@arrec.com]
Sent: Tuesday, February 14, 2006 8:14 AM
To: Pat Lowery
Cc: Zelthami, William
Subject: FW: Amp Draw for Electrodes

Pat,

Correction on them maximum amp draw. Pat the 38B data exceeds 3000 Amps and the 38A-1 Data shows amp draws of <3700 amps. Use 4000 amps as our design load in your AWTE calculations and disregard the email below.

Jerid Mauss

From: Mauss, Jerid
Sent: Monday, February 13, 2006 11:54 AM
To: 'Pat Lowery'
Cc: Zelthami, William
Subject: Amp Draw for Electrodes

Pat,

Based on the 38B electrical data 3000 Amps shall be assumed as a maximum steady state current. The highest recorded amperage from the 38B was ~2860. The amperage tended to be lower as the depth of the glass increased. At approximately half full the maximum current was less than 2500 Amps. 3000 amps should be bounding for your analysis and has additional conservatism built in due to the level radiant surface being neglected in determining this value.

Jerid Mauss

The information contained in this e-mail is intended only for the individual or entity to whom it is addressed.
Its contents (including any attachments) may contain confidential and/or privileged information.
If you are not an intended recipient you must not use, disclose, disseminate, copy or print its contents.
If you receive this e-mail in error, please notify the sender by reply e-mail and delete and destroy the message.

2/15/2006

ARES CORPORATION

CALCULATION SHEET

Project No. 0509206.01	Calculation No. 0509206.01-M-004	Rev. No. 1	Page No. 31 of 159
Title: DBVS AWTE Thermal Load Inventory			
Prepared By: P.S. Lowery	Date: 2.14.06	Checked By: S.R. Pierce	Date: 2.15.06

3000°F CERAMIC BLANKET

Super Efficient Thermal Insulation

Rescor Ceramic Fiber Blanket Insulation is a strong, lightweight, flexible blanket made from Asbestos-Free extra long, ceramic fibers, which are cross-linked to produce excellent handling strength.

Easily withstands continuous use up to 3000°F.

Provides outstanding thermal insulation, low heat storage, high resiliency, high mechanical and thermal shock resistance and sound absorption.

Resistant to oxidizing and reducing atmospheres, molten non-ferrous metals, steam, most chemicals and solvents.

(Not recommended for use with HF H_3PO_4 and N_aOH)

APPLICATIONS

High temperature insulation, furnace linings, mufflers, gas turbines, fans, ovens, chemical reactors, expansion joint packing, high temperature filters, fire protection, sound absorption, stress relieving insulation, non-contaminating heating and sintering separators.

Use Rescor 370 for all general purpose needs to 2300°F.

Use Rescor 370H for applications to 2500°F.

Use Rescor 3370UHT for applications to 3000°F.

Use Rescor 370FT (Aluminum foil backed blanket) for additional insulation and handling strength. Ideal for use as a reflective barrier.

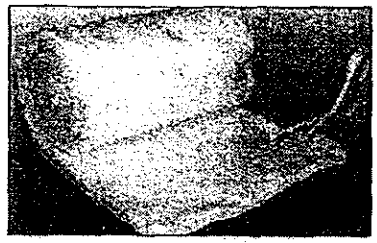

Cutting 370 Insulation for a 2000°F Nuclear Instrument

PROPERTIES	
Melting Point (°F)	3200
Service Temp (°F)	2300-3000
Density (pcf)	6-12
Dielectric Constant (@ 10^6cps)	1.61
Dielectric Strength (volts/mil)	100
Loss Factor	0.017
Specific Heat (BTU/#°F)	0.25
Thermal Conductivity (BTU/hr/ft²/°F)	
500°F	0.20
1000°F	0.60
1500°F	0.80
2000°F	1.33

To Find your Insulation Requirements

1) Draw a vertical line from the hot side temperature.

2) Draw a horizontal line from the desired cold side temperature.

3) The required insulation thickness is shown at the intersection of the two lines.

Example:

For a furnace with an 1800°F working temp. and a desired outside furnace temp. of 350°F, 1" of insulation would be required.

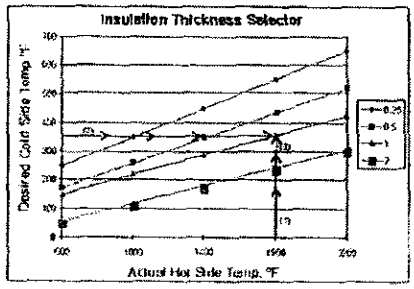

Cat. No.	Temp. °F	Thickness	Size/Roll	Cost/Roll
370-1	2300	1/8"	24" x 25'	68.75
370-2	2300	1/4"	24" x 25'	79.95
370-3	2300	1/2"	24" x 12'	79.95
370-4	2300	1/2"	24" x 25'	125.95
370-5	2300	1"	24" x 12'	114.95
370H-6	2500	1/2"	24" x 12'	169.95
3370UHT-1	3000	1 1/2"	24" x 24'	134.95
370FT-1	(Al. Foil Backed)	1/2"	24" x 12'	124.95
370-1EHS	2300	1/8"	24" x 25'	214.95

Special Sizes, Custom Fabricated Parts and Quantity Prices on Request

See page 12, 13 for Ceramic Adhesives and Hardeners

4 ICOTRONICS CORP. www.icotronics.com (713) 646-7956 Fax (713) 646-3029

Calculation Sheet. QAP 3.1, Rev. 6 (11-15-05)

A.R.E.S. CORPORATION	CALCULATION SHEET		
Project No. 0509206.01	Calculation No. 0509206.01-M-004	Rev. No. 1	Page No. 32 of 159
Title: DBVS AWTE Thermal Load Inventory			
Prepared By: P.S. Lowery	Date: 2.14.06	Checked By: S.R. Pierce	Date: 2.15.06

APPENDIX C

MATHCAD MODEL TO ESTIMATE THE TEMPERATURE DISTRIBUTION AND HEAT LOSS OFF THE EXPOSED ELECTRODE SURFACES IN THE AWTE

ARES CORPORATION	CALCULATION SHEET		
Project No. 0509206.01	Calculation No. 0509206.01-M-004	Rev. No. 1	Page No. 33 of 159
Title: DBVS AWTE Thermal Load Inventory			
Prepared By: P.S. Lowery	Date: 2.14.06	Checked By: S.R. Pierce	Date: 2.15.06

°C = 1 °F = 1

$XtoC(x) := \left(\frac{x}{K} - 273.15\right)$ $FtoC(x) := \frac{5}{9}\left(\frac{x}{°F} - 32\right)$

ORIGIN = 1

Model Parameters:

$\sigma := 5.67 \cdot 10^{-8} \frac{W}{m^2 \cdot K^4}$

Electrode properties

$k := 230 \frac{W}{m \cdot K}$ $\epsilon_{rod} := 0.7$

$D := 12in$ $L_{rod} := 72in$ $\delta_{rod} := 3in$ $A_{rod} := \pi \cdot D \cdot \delta$

Hood Properties

$\epsilon_H := 0.85$ $A_H := 2 \cdot (30in) \cdot (22ft + 5.5ft) + (5.5ft) \cdot (22ft)$ $A_H := \frac{A_H}{A_{rod}}$

Melt Surface Properties

$\epsilon_M := 0.7$ $A_M := (5.5ft) \cdot (22ft)$ $A_M := \frac{A_M}{A_{rod}}$

Natural convection heat transfer coefficients are modeled using correlations from Holman, Heat Transfer, 3rd Edition, p. 219. They are of the form ...

$h = \xi_o (\Delta T)^{1/3}$

where the correlation parameter, ξ_o, reflects the shape and orientation of the surface (the subscript "o" indicates the orientation – e.g., V -> vertical, HU -> horizontal, heated surface facing up, and so on).

Natural Convection Heat Transfer Coefficient Correlation Parameters

$\xi_V := 1.32 \frac{W}{m^2 \cdot \sqrt[3]{K^4}}$ $\xi_{HD} := 1.52 \frac{W}{m^2 \cdot \sqrt[3]{K^4}}$

ARES CORPORATION	CALCULATION SHEET		
Project No. 0509206.01	Calculation No. 0509206.01-M-004	Rev. No. 1	Page No. 34 of 159
Title: DBVS AWTE Thermal Load Inventory			
Prepared By: P.S. Lowery	Date: 2.14.06	Checked By: S.R. Pierce	Date: 2.15.06

$T_O := (1350 + 273.15)K$ Temperature at the base of the portion of the electrode "exposed" to the off-gas plenum region

$T_M := (1050 + 273.15)K$ Temperature of the melt surface

$T_{wall} := (570 + 273.15)K$ Temperature used to represent the OAG wall temperatures for the purposes of radiant heat transfer from the electrode surface

$T_{OG} := (FtoC(875°F) + 273.15)K$ Temperature of the off-gas plenum gases

$T_{AWTE} := \left[\frac{1}{2}\cdot(570 + FtoC(77°F) + 273.15)\right]K$ Temperature in the AWTE floor penetration

$T_A := (570 + 273.15)K$ Temperature of the air space between the OAG hood and the AWTE floor

$T_{room} := (FtoC(77°F) + 273.15)K$ Temperature of the AWTE room and the associated internal equipment & structures

Now include the Joule heat dissipation in the electrode that is a consequence of passing current through it ...

$I := 4000A$ $\rho_{res} := 21\cdot 10^{-5}\Omega\cdot in$ $L_{electrode} := 5$

$R_{electrode} := \rho_{res}\frac{L_{electrode}}{\frac{\pi\cdot D^2}{4}}$ $R_{electrode} = 5.57\cdot 10^{-6}\Omega$

$P_{electrode} := R_{electrode}\cdot I^2$ $P_{electrode} = 0.089kW$

$\rho_{electrode} := \frac{P_{electrode}}{\left(\frac{\pi\cdot D^2}{4}\right)\cdot 3}$ $\rho_{electrode} = 16.03\frac{kW}{m^3}$

The electrode is discretized into 3" cells. The cell IDs are arranged as follows:

Nodes 1 thru 10 are exposed to the off-gas hood plenum region
Node 11 is in th gap between the off-gas hood and the AWTE floor
Node 12 is in the AWTE floor
Nodes 13 thru 25 are in the AWTE room

ARES CORPORATION	CALCULATION SHEET		
Project No. 0509206.01	Calculation No. 0509206.01-M-004	Rev. No. 1	Page No. 35 of 159
Title: DBVS AWTE Thermal Load Inventory			
Prepared By: P.S. Lowery	Date: 2.14.06	Checked By: S.R. Pierce	Date: 2.15.06

Initial guess for temperature distribution ...

$T_1 := (600 + 273.15)K$ $T_8 := (600 + 273.15)K$ $T_{15} := (600 + 273.15)K$ $T_{22} := (600 + 273.15)K$

$T_2 := (600 + 273.15)K$ $T_9 := (600 + 273.15)K$ $T_{16} := (600 + 273.15)K$ $T_{23} := (600 + 273.15)K$

$T_3 := (600 + 273.15)K$ $T_{10} := (600 + 273.15)K$ $T_{17} := (600 + 273.15)K$ $T_{24} := (600 + 273.15)K$

$T_4 := (600 + 273.15)K$ $T_{11} := (600 + 273.15)K$ $T_{18} := (600 + 273.15)K$ $T_{25} := (600 + 273.15)K$

$T_5 := (600 + 273.15)K$ $T_{12} := (600 + 273.15)K$ $T_{19} := (600 + 273.15)K$

$T_6 := (600 + 273.15)K$ $T_{13} := (600 + 273.15)K$ $T_{20} := (600 + 273.15)K$

$T_7 := (600 + 273.15)K$ $T_{14} := (600 + 273.15)K$ $T_{21} := (600 + 273.15)K$

Load a vector containing the view factors from the cylindrical segments representing the radiation view factor from the electrode outer cylindrical surface to the planar melt surface. This will be used to partition the radiant heat transfer for the lower ten cylindrical segments used to represent the portion of the electrode inside the off'gas hood. Subtracting this value from one will represent the view factor for exchange between the electrode circular segment and the hood surfaces.

$$E_n := \begin{pmatrix} 0.95 \\ 0.9 \\ 0.8 \\ 0.7 \\ 0.6 \\ 0.5 \\ 0.4 \\ 0.3 \\ 0.2 \\ 0.1 \end{pmatrix}$$

Calculation Sheet: QAP 3.1, Rev. 6 (11-15-05)

ARES CORPORATION	CALCULATION SHEET		
Project No. 0509206.01	Calculation No. 0509206.01-M-004	Rev. No. 1	Page No. 36 of 159
Title: DBVS AWTE Thermal Load Inventory			
Prepared By: P.S. Lowery	Date: 2.14.06	Checked By: S.R. Pierce	Date: 2.15.06

Given

j= 1 to 10 is in the O/G plenum region

$$-k\cdot\frac{\pi}{4}\cdot D^2\cdot\left(\frac{T_2-3T_1+2T_0}{\delta}\right)+A_{rod}\cdot\delta\cdot\nu\cdot\left(\left|T_1-T_{OG}\right|\right)^{\frac{1}{3}}\cdot\left(T_1-T_{OG}\right)-\cdots=0$$
$$+\frac{\sigma\cdot A_{rod}\left(T_1^4-T_{wall}^4\right)}{\left(\frac{1-\varepsilon_{rod}}{\varepsilon_{rod}}\right)+\frac{1}{1-F_1}+\left(\frac{1-\varepsilon_H}{\varepsilon_H\cdot A_H}\right)}+\frac{\sigma\cdot A_{rod}\left(T_1^4-T_M^4\right)}{\left(\frac{1-\varepsilon_{rod}}{\varepsilon_{rod}}\right)+\frac{1}{F_1}+\left(\frac{1-\varepsilon_M}{\varepsilon_M\cdot A_M}\right)}\cdots$$
$$+P_{electrode}$$

$$-k\cdot\frac{\pi}{4}\cdot D^2\cdot\left(\frac{T_3-2T_2+T_1}{\delta}\right)+A_{rod}\cdot\delta\cdot\nu\cdot\left(\left|T_2-T_{OG}\right|\right)^{\frac{1}{3}}\cdot\left(T_2-T_{OG}\right)\cdots=0$$
$$+\frac{\sigma\cdot A_{rod}\left(T_2^4-T_{wall}^4\right)}{\left(\frac{1-\varepsilon_{rod}}{\varepsilon_{rod}}\right)+\frac{1}{1-F_2}+\left(\frac{1-\varepsilon_H}{\varepsilon_H\cdot A_H}\right)}+\frac{\sigma\cdot A_{rod}\left(T_2^4-T_M^4\right)}{\left(\frac{1-\varepsilon_{rod}}{\varepsilon_{rod}}\right)+\frac{1}{F_2}+\left(\frac{1-\varepsilon_M}{\varepsilon_M\cdot A_M}\right)}\cdots$$
$$+P_{electrode}$$

$$-k\cdot\frac{\pi}{4}\cdot D^2\cdot\left(\frac{T_4-2T_3+T_2}{\delta}\right)+A_{rod}\cdot\delta\cdot\nu\cdot\left(\left|T_3-T_{OG}\right|\right)^{\frac{1}{3}}\cdot\left(T_3-T_{OG}\right)\cdots=0$$
$$+\frac{\sigma\cdot A_{rod}\left(T_3^4-T_{wall}^4\right)}{\left(\frac{1-\varepsilon_{rod}}{\varepsilon_{rod}}\right)+\frac{1}{1-F_3}+\left(\frac{1-\varepsilon_H}{\varepsilon_H\cdot A_H}\right)}+\frac{\sigma\cdot A_{rod}\left(T_3^4-T_M^4\right)}{\left(\frac{1-\varepsilon_{rod}}{\varepsilon_{rod}}\right)+\frac{1}{F_3}+\left(\frac{1-\varepsilon_M}{\varepsilon_M\cdot A_M}\right)}\cdots$$
$$+P_{electrode}$$

$$-k\cdot\frac{\pi}{4}\cdot D^2\cdot\left(\frac{T_5-2T_4+T_3}{\delta}\right)+A_{rod}\cdot\delta\cdot\nu\cdot\left(\left|T_4-T_{OG}\right|\right)^{\frac{1}{3}}\cdot\left(T_4-T_{OG}\right)\cdots=0$$
$$+\frac{\sigma\cdot A_{rod}\left(T_4^4-T_{wall}^4\right)}{\left(\frac{1-\varepsilon_{rod}}{\varepsilon_{rod}}\right)+\frac{1}{1-F_4}+\left(\frac{1-\varepsilon_H}{\varepsilon_H\cdot A_H}\right)}+\frac{\sigma\cdot A_{rod}\left(T_4^4-T_M^4\right)}{\left(\frac{1-\varepsilon_{rod}}{\varepsilon_{rod}}\right)+\frac{1}{F_4}+\left(\frac{1-\varepsilon_M}{\varepsilon_M\cdot A_M}\right)}\cdots$$
$$+P_{electrode}$$

ARES CORPORATION	CALCULATION SHEET		
Project No. 0509206.01	Calculation No. 0509206.01-M-004	Rev. No. 1	Page No. 37 of 159
Title: DBVS AWTE Thermal Load Inventory			
Prepared By: P.S. Lowery	Date: 2.14.06	Checked By: S.R. Pierce	Date: 2.15.06

$$-k\cdot\frac{\pi}{4}\cdot D^2\left(\frac{T_6-2T_5+T_4}{\delta}\right)+A_{rod}\cdot\xi\cdot\left(\left|T_5-T_{OG}\right|\right)^{\frac{1}{3}}\cdot\left(T_5-T_{OG}\right)-\frac{\sigma\cdot A_{rod}\left(T_5^{\,4}-T_{wall}^{\,4}\right)}{\left(\frac{1-\varepsilon_{rod}}{\varepsilon_{rod}}\right)+\frac{1}{1-F_5}+\left(\frac{1-\varepsilon_H}{\varepsilon_H\cdot A_H}\right)}+\frac{\sigma\cdot A_{rod}\left(T_5^{\,4}-T_M^{\,4}\right)}{\left(\frac{1-\varepsilon_{rod}}{\varepsilon_{rod}}\right)+\frac{1}{F_5}+\left(\frac{1-\varepsilon_M}{\varepsilon_M\cdot A_M}\right)}-P_{electrode}=0$$

$$-k\cdot\frac{\pi}{4}\cdot D^2\left(\frac{T_7-2T_6+T_5}{\delta}\right)+A_{rod}\cdot\xi\cdot\left(\left|T_6-T_{OG}\right|\right)^{\frac{1}{3}}\cdot\left(T_6-T_{OG}\right)-\frac{\sigma\cdot A_{rod}\left(T_6^{\,4}-T_{wall}^{\,4}\right)}{\left(\frac{1-\varepsilon_{rod}}{\varepsilon_{rod}}\right)+\frac{1}{1-F_6}+\left(\frac{1-\varepsilon_H}{\varepsilon_H\cdot A_H}\right)}+\frac{\sigma\cdot A_{rod}\left(T_6^{\,4}-T_M^{\,4}\right)}{\left(\frac{1-\varepsilon_{rod}}{\varepsilon_{rod}}\right)+\frac{1}{F_6}+\left(\frac{1-\varepsilon_M}{\varepsilon_M\cdot A_M}\right)}-P_{electrode}=0$$

$$-k\cdot\frac{\pi}{4}\cdot D^2\left(\frac{T_8-2T_7+T_6}{\delta}\right)+A_{rod}\cdot\xi\cdot\left(\left|T_7-T_{OG}\right|\right)^{\frac{1}{3}}\cdot\left(T_7-T_{OG}\right)-\frac{\sigma\cdot A_{rod}\left(T_7^{\,4}-T_{wall}^{\,4}\right)}{\left(\frac{1-\varepsilon_{rod}}{\varepsilon_{rod}}\right)+\frac{1}{1-F_7}+\left(\frac{1-\varepsilon_H}{\varepsilon_H\cdot A_H}\right)}+\frac{\sigma\cdot A_{rod}\left(T_7^{\,4}-T_M^{\,4}\right)}{\left(\frac{1-\varepsilon_{rod}}{\varepsilon_{rod}}\right)+\frac{1}{F_7}+\left(\frac{1-\varepsilon_M}{\varepsilon_M\cdot A_M}\right)}-P_{electrode}=0$$

ARES CORPORATION	CALCULATION SHEET		
Project No. 0509206.01	Calculation No. 0509206.01-M-004	Rev. No. 1	Page No. 38 of 159
Title: DBVS AWTE Thermal Load Inventory			
Prepared By: P.S. Lowery	Date: 2.14.06	Checked By: S.R. Pierce	Date: 2.15.06

$$-k\cdot\frac{\pi}{4}\cdot D^2\cdot\left(\frac{T_9-2T_8+T_7}{\delta}\right)+A_{rod}\cdot\delta\cdot V\cdot\left(\left|T_8-T_{OG}\right|\right)^{\frac{1}{3}}\cdot\left(T_8-T_{OG}\right)-\cdots=0$$
$$+\frac{\sigma\cdot A_{rod}\left(T_8^{\,4}-T_{wall}^{\,4}\right)}{\left(\frac{1-\varepsilon_{rod}}{\varepsilon_{rod}}\right)+\frac{1}{1-F_8}+\left(\frac{1-\varepsilon_H}{\varepsilon_H\cdot A_H}\right)}+\frac{\sigma\cdot A_{rod}\left(T_8^{\,4}-T_M^{\,4}\right)}{\left(\frac{1-\varepsilon_{rod}}{\varepsilon_{rod}}\right)+\frac{1}{F_8}+\left(\frac{1-\varepsilon_M}{\varepsilon_M\cdot A_M}\right)}-\cdots$$
$$+P_{electrode}$$

$$-k\cdot\frac{\pi}{4}\cdot D^2\cdot\left(\frac{T_{10}-2T_9+T_8}{\delta}\right)+A_{rod}\cdot\delta\cdot V\cdot\left(\left|T_9-T_{OG}\right|\right)^{\frac{1}{3}}\cdot\left(T_9-T_{OG}\right)-\cdots=0$$
$$+\frac{\sigma\cdot A_{rod}\left(T_9^{\,4}-T_{wall}^{\,4}\right)}{\left(\frac{1-\varepsilon_{rod}}{\varepsilon_{rod}}\right)+\frac{1}{1-F_9}+\left(\frac{1-\varepsilon_H}{\varepsilon_H\cdot A_H}\right)}+\frac{\sigma\cdot A_{rod}\left(T_9^{\,4}-T_M^{\,4}\right)}{\left(\frac{1-\varepsilon_{rod}}{\varepsilon_{rod}}\right)+\frac{1}{F_9}+\left(\frac{1-\varepsilon_M}{\varepsilon_M\cdot A_M}\right)}-\cdots$$
$$+P_{electrode}$$

$$-k\cdot\frac{\pi}{4}\cdot D^2\cdot\left(\frac{T_{11}-2T_{10}+T_9}{\delta}\right)+A_{rod}\cdot\delta\cdot V\cdot\left(\left|T_{10}-T_{OG}\right|\right)^{\frac{1}{3}}\cdot\left(T_{10}-T_{OG}\right)-\cdots=0$$
$$+\frac{\sigma\cdot A_{rod}\left(T_{10}^{\,4}-T_{wall}^{\,4}\right)}{\left(\frac{1-\varepsilon_{rod}}{\varepsilon_{rod}}\right)+\frac{1}{1-F_{10}}+\left(\frac{1-\varepsilon_H}{\varepsilon_H\cdot A_H}\right)}+\frac{\sigma\cdot A_{rod}\left(T_{10}^{\,4}-T_M^{\,4}\right)}{\left(\frac{1-\varepsilon_{rod}}{\varepsilon_{rod}}\right)+\frac{1}{F_{10}}+\left(\frac{1-\varepsilon_M}{\varepsilon_M\cdot A_M}\right)}-\cdots$$
$$+P_{electrode}$$

j = 11 is in the air gap between the off-gas hood and AWTE floor

$$\frac{T_{12}-2\cdot T_{11}+T_{10}}{\delta^2}+\frac{4\cdot\delta\cdot\varepsilon}{k\cdot D}\cdot\left(T_{11}-T_A\right)^{\frac{4}{3}}+\frac{4\cdot\sigma\cdot\varepsilon_{rod}}{k\cdot D}\cdot\left(T_{11}^{\,4}-T_A^{\,4}\right)-\cdots=0$$
$$+\frac{P_{electrode}}{k}$$

Calculation Sheet: QAP 3.1, Rev. 6 (11-15-05)

ARES CORPORATION	CALCULATION SHEET		
Project No. 0509206.01	Calculation No. 0509206.01-M-004	Rev. No. 1	Page No. 39 of 159
Title: DBVS AWTE Thermal Load Inventory			
Prepared By: P.S. Lowery	Date: 2.14.06	Checked By: S.R. Pierce	Date: 2.15.06

j = 12 is in the penetration in the AWTE floor

$$\frac{T_{13} - 2 \cdot T_{12} + T_{11}}{s^2} - \frac{4 \cdot \xi_V}{k \cdot D} \cdot \left(T_{12} - T_{AWTE}\right)^{\frac{4}{3}} - \frac{4 \cdot \sigma \cdot \varepsilon_{rod}}{k \cdot D} \cdot \left(T_{12}^{\ 4} - T_{AWTE}^{\ 4}\right) + \frac{P_{electrode}}{k} = 0$$

j = 13 thru 25 are in the AWTE room

$$\frac{T_{14} - 2 \cdot T_{13} + T_{12}}{s^2} - \frac{4 \cdot \xi_V}{k \cdot D} \cdot \left(T_{13} - T_{room}\right)^{\frac{4}{3}} - \frac{4 \cdot \sigma \cdot \varepsilon_{rod}}{k \cdot D} \cdot \left(T_{13}^{\ 4} - T_{room}^{\ 4}\right) + \frac{P_{electrode}}{k} = 0$$

$$\frac{T_{15} - 2 \cdot T_{14} + T_{13}}{s^2} - \frac{4 \cdot \xi_V}{k \cdot D} \cdot \left(T_{14} - T_{room}\right)^{\frac{4}{3}} - \frac{4 \cdot \sigma \cdot \varepsilon_{rod}}{k \cdot D} \cdot \left(T_{14}^{\ 4} - T_{room}^{\ 4}\right) + \frac{P_{electrode}}{k} = 0$$

$$\frac{T_{16} - 2 \cdot T_{15} + T_{14}}{s^2} - \frac{4 \cdot \xi_V}{k \cdot D} \cdot \left(T_{15} - T_{room}\right)^{\frac{4}{3}} - \frac{4 \cdot \sigma \cdot \varepsilon_{rod}}{k \cdot D} \cdot \left(T_{15}^{\ 4} - T_{room}^{\ 4}\right) + \frac{P_{electrode}}{k} = 0$$

$$\frac{T_{17} - 2 \cdot T_{16} + T_{15}}{s^2} - \frac{4 \cdot \xi_V}{k \cdot D} \cdot \left(T_{16} - T_{room}\right)^{\frac{4}{3}} - \frac{4 \cdot \sigma \cdot \varepsilon_{rod}}{k \cdot D} \cdot \left(T_{16}^{\ 4} - T_{room}^{\ 4}\right) + \frac{P_{electrode}}{k} = 0$$

$$\frac{T_{18} - 2 \cdot T_{17} + T_{16}}{s^2} - \frac{4 \cdot \xi_V}{k \cdot D} \cdot \left(T_{17} - T_{room}\right)^{\frac{4}{3}} - \frac{4 \cdot \sigma \cdot \varepsilon_{rod}}{k \cdot D} \cdot \left(T_{17}^{\ 4} - T_{room}^{\ 4}\right) + \frac{P_{electrode}}{k} = 0$$

$$\frac{T_{19} - 2 \cdot T_{18} + T_{17}}{s^2} - \frac{4 \cdot \xi_V}{k \cdot D} \cdot \left(T_{18} - T_{room}\right)^{\frac{4}{3}} - \frac{4 \cdot \sigma \cdot \varepsilon_{rod}}{k \cdot D} \cdot \left(T_{18}^{\ 4} - T_{room}^{\ 4}\right) + \frac{P_{electrode}}{k} = 0$$

$$\frac{T_{20} - 2 \cdot T_{19} + T_{18}}{s^2} - \frac{4 \cdot \xi_V}{k \cdot D} \cdot \left(T_{19} - T_{room}\right)^{\frac{4}{3}} - \frac{4 \cdot \sigma \cdot \varepsilon_{rod}}{k \cdot D} \cdot \left(T_{19}^{\ 4} - T_{room}^{\ 4}\right) + \frac{P_{electrode}}{k} = 0$$

ARES CORPORATION	CALCULATION SHEET		
Project No. 0509206.01	Calculation No. 0509206.01-M-004	Rev. No. 1	Page No. 40 of 159
Title: DBVS AWTE Thermal Load Inventory			
Prepared By: P.S. Lowery	Date: 2.14.06	Checked By: S.R. Pierce	Date: 2.15.06

$$\frac{T_{21} - 2\cdot T_{20} + T_{19}}{\delta^2} - \frac{4\cdot\xi_V}{k\cdot D}\cdot\left(T_{20} - T_{room}\right)^{\frac{4}{3}} - \frac{4\cdot\sigma\cdot\epsilon_{rod}}{k\cdot D}\cdot\left(T_{20}^{\ 4} - T_{room}^{\ 4}\right) + \frac{P_{electrode}}{k} =$$

$$\frac{T_{22} - 2\cdot T_{21} + T_{20}}{\delta^2} - \frac{4\cdot\xi_V}{k\cdot D}\cdot\left(T_{21} - T_{room}\right)^{\frac{4}{3}} - \frac{4\cdot\sigma\cdot\epsilon_{rod}}{k\cdot D}\cdot\left(T_{21}^{\ 4} - T_{room}^{\ 4}\right) + \frac{P_{electrode}}{k} =$$

$$\frac{T_{23} - 2\cdot T_{22} + T_{21}}{\delta^2} - \frac{4\cdot\xi_V}{k\cdot D}\cdot\left(T_{22} - T_{room}\right)^{\frac{4}{3}} - \frac{4\cdot\sigma\cdot\epsilon_{rod}}{k\cdot D}\cdot\left(T_{22}^{\ 4} - T_{room}^{\ 4}\right) + \frac{P_{electrode}}{k} = 0$$

$$\frac{T_{24} - 2\cdot T_{23} + T_{22}}{\delta^2} - \frac{4\cdot\xi_V}{k\cdot D}\cdot\left(T_{23} - T_{room}\right)^{\frac{4}{3}} - \frac{4\cdot\sigma\cdot\epsilon_{rod}}{k\cdot D}\cdot\left(T_{23}^{\ 4} - T_{room}^{\ 4}\right) + \frac{P_{electrode}}{k} =$$

$$\frac{2T_{25} - 3\cdot T_{24} + T_{23}}{\delta^2} - \frac{4\cdot\xi_V}{k\cdot D}\cdot\left(T_{24} - T_{room}\right)^{\frac{4}{3}} - \frac{4\cdot\sigma\cdot\epsilon_{rod}}{k\cdot D}\cdot\left(T_{24}^{\ 4} - T_{room}^{\ 4}\right) + \frac{P_{electrode}}{k} +$$

$$\frac{2\cdot\left(T_{25} - T_{24}\right)}{\delta} + \frac{4\xi_V\cdot\delta}{k\cdot D}\cdot\left(T_{25} - T_{room}\right)^{\frac{4}{3}} + \frac{\xi_{HU}}{k}\cdot\left(T_{25} - T_{room}\right)^{\frac{4}{3}} \ldots = 0$$

$$+ \frac{\sigma\cdot\epsilon_{rod}}{k}\cdot\left(T_{25}^{\ 4} - T_{room}^{\ 4}\right) + \frac{4\cdot\sigma\cdot\epsilon_{rod}\cdot\delta}{k\cdot D}\cdot\left(T_{25}^{\ 4} - T_{room}^{\ 4}\right)$$

ARES CORPORATION	CALCULATION SHEET		
Project No. 0509206.01	Calculation No. 0509206.01-M-004	Rev. No. 1	Page No. 41 of 159
Title: DBVS AWTE Thermal Load Inventory			
Prepared By: P.S. Lowery	Date: 2.14.06	Checked By: S.R. Pierce	Date: 2.15.06

$$\begin{pmatrix} T1 \\ T2 \\ T3 \\ T4 \\ T5 \\ T6 \\ T7 \\ T8 \\ T9 \\ T10 \\ T11 \\ T12 \\ T13 \\ T14 \\ T15 \\ T16 \\ T17 \\ T18 \\ T19 \\ T20 \\ T21 \\ T22 \\ T23 \\ T24 \\ T25 \end{pmatrix} := Find(T_1, T_2, T_3, T_4, T_5, T_6, T_7, T_8, T_9, T_{10}, T_{11}, T_{12}, T_{13}, T_{14}, T_{15}, T_{16}, T_{17}, T_{18}, T_{19}, T_{2}$$

CALCULATION SHEET

Project No. 0509206.01	Calculation No. 0509206.01-M-004	Rev. No. 1	Page No. 42 of 159
Title: DBVS AWTE Thermal Load Inventory			
Prepared By: P.S. Lowery	Date: 2.14.06	Checked By: S.R. Pierce	Date: 2.15.06

$T_0 = 1623.15$ K	$T0C := KtoC(T_0)$	$T0C = 1350$
$T1 = 1546.87$ K	$T1C := KtoC(T1)$	$T1C = 1273.72$
$T2 = 1436.451$ K	$T2C := KtoC(T2)$	$T2C = 1163.301$
$T3 = 1350.453$ K	$T3C := KtoC(T3)$	$T3C = 1077.303$
$T4 = 1279.772$ K	$T4C := KtoC(T4)$	$T4C = 1006.622$
$T5 = 1.218 \times 10^3$ K	$T5C := KtoC(T5)$	$T5C = 945.266$
$T6 = 1.162 \times 10^3$ K	$T6C := KtoC(T6)$	$T6C = 889.127$
$T7 = 1.109 \times 10^3$ K	$T7C := KtoC(T7)$	$T7C = 835.393$
$T8 = 1.055 \times 10^3$ K	$T8C := KtoC(T8)$	$T8C = 782.255$
$T9 = 1.002 \times 10^3$ K	$T9C := KtoC(T9)$	$T9C = 728.787$
$T10 = 948.107$ K	$T10C := KtoC(T10)$	$T10C = 674.957$
$T11 = 894.842$ K	$T11C := KtoC(T11)$	$T11C = 621.692$
$T12 = 843.043$ K	$T12C := KtoC(T12)$	$T12C = 569.893$
$T13 = 798.342$ K	$T13C := KtoC(T13)$	$T13C = 525.192$
$T14 = 760.21$ K	$T14C := KtoC(T14)$	$T14C = 487.06$
$T15 = 727.524$ K	$T15C := KtoC(T15)$	$T15C = 454.374$
$T16 = 699.429$ K	$T16C := KtoC(T16)$	$T16C = 426.279$
$T17 = 675.267$ K	$T17C := KtoC(T17)$	$T17C = 402.117$
$T18 = 654.522$ K	$T18C := KtoC(T18)$	$T18C = 381.372$
$T19 = 636.787$ K	$T19C := KtoC(T19)$	$T19C = 363.637$
$T20 = 621.338$ K	$T20C := KtoC(T20)$	$T20C = 348.188$
$T21 = 609.116$ K	$T21C := KtoC(T21)$	$T21C = 335.966$
$T22 = 598.715$ K	$T22C := KtoC(T22)$	$T22C = 325.567$
$T23 = 590.38$ K	$T23C := KtoC(T23)$	$T23C = 317.23$
$T24 = 583.98$ K	$T24C := KtoC(T24)$	$T24C = 310.83$

CALCULATION SHEET

Project No. 0509206.01	Calculation No. 0509206.01-M-004	Rev. No. 1	Page No. 43 of 159
Title: DBVS AWTE Thermal Load Inventory			
Prepared By: P.S. Lowery	Date: 2.14.06	Checked By: S.R. Pierce	Date: 2.15.06

$T25 = 591.702\ K$ $\quad T25C := KtoC(T25)$ $\quad T25C = 308.552$

$$Tplot := \begin{pmatrix} T25C \\ T24C \\ T23C \\ T22C \\ T21C \\ T20C \\ T19C \\ T18C \\ T17C \\ T16C \\ T15C \\ T14C \\ T13C \\ T12C \\ T11C \\ T10C \\ T9C \\ T8C \\ T7C \\ T6C \\ T5C \\ T4C \\ T3C \\ T2C \\ T1C \\ T0C \end{pmatrix} \qquad zplot := \begin{pmatrix} \frac{48}{2} \\ \frac{46}{2} \\ \frac{44}{2} \\ \frac{42}{2} \\ \frac{40}{2} \\ \frac{38}{2} \\ \frac{36}{2} \\ \frac{34}{2} \\ \frac{32}{2} \\ \frac{30}{2} \\ \frac{28}{2} \\ \frac{26}{2} \\ \frac{24}{2} \\ \frac{22}{2} \\ \frac{20}{2} \\ \frac{18}{2} \\ \frac{16}{2} \\ \frac{14}{2} \\ 13 \end{pmatrix}$$

Calculation Sheet QAP 3.1, Rev. 6 (11-15-05)

ARES CORPORATION	CALCULATION SHEET		
Project No. 0509206.01	Calculation No. 0509206.01-M-004	Rev. No. 1	Page No. 44 of 159
Title: DBVS AWTE Thermal Load Inventory			
Prepared By: P.S. Lowery	Date: 2.14.06	Checked By: S.R. Pierce	Date: 2.15.06

$$\begin{pmatrix} \frac{178}{2} \\ \frac{138}{2} \\ \frac{98}{2} \\ \frac{78}{2} \\ \frac{58}{2} \\ \frac{38}{2} \\ \frac{5}{2} \\ 0 \end{pmatrix}$$

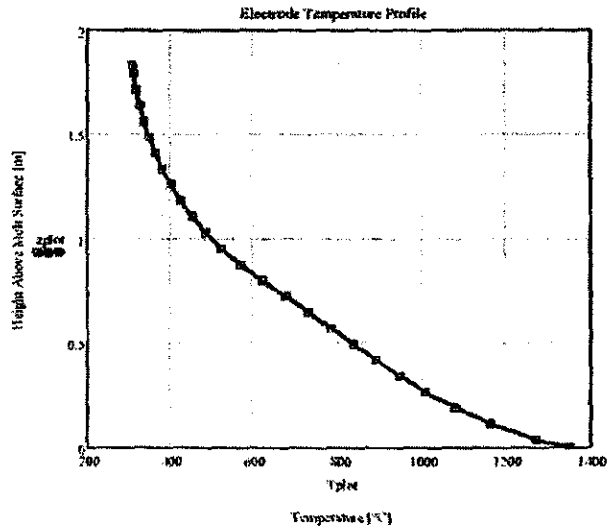

ARES CORPORATION	CALCULATION SHEET		
Project No. 0509206.01	Calculation No. 0509206.01-M-004	Rev. No. 1	Page No. 45 of 159
Title: DBVS AWTE Thermal Load Inventory			
Prepared By: P.S. Lowery	Date: 2.14.06	Checked By: S.R. Pierce	Date: 2.15.06

$$Q := \begin{bmatrix} 0 \\ 0 \\ 0 \\ 0 \\ 0 \\ 0 \\ 0 \\ 0 \\ 0 \\ 0 \\ 0 \\ \pi \cdot D \cdot \delta \cdot \left[\xi_V \cdot \left(T12 - T_{AWTE} \right)^{\frac{4}{3}} + \sigma \cdot \varepsilon_{roof} \cdot \left(T12^4 - T_{AWTE}^4 \right) \right] \\ \pi \cdot D \cdot \delta \cdot \left[\xi_V \cdot \left(T13 - T_{room} \right)^{\frac{4}{3}} + \sigma \cdot \varepsilon_{roof} \cdot \left(T13^4 - T_{room}^4 \right) \right] \\ \pi \cdot D \cdot \delta \cdot \left[\xi_V \cdot \left(T14 - T_{room} \right)^{\frac{4}{3}} + \sigma \cdot \varepsilon_{roof} \cdot \left(T14^4 - T_{room}^4 \right) \right] \\ \pi \cdot D \cdot \delta \cdot \left[\xi_V \cdot \left(T15 - T_{room} \right)^{\frac{4}{3}} + \sigma \cdot \varepsilon_{roof} \cdot \left(T15^4 - T_{room}^4 \right) \right] \\ \pi \cdot D \cdot \delta \cdot \left[\xi_V \cdot \left(T16 - T_{room} \right)^{\frac{4}{3}} + \sigma \cdot \varepsilon_{roof} \cdot \left(T16^4 - T_{room}^4 \right) \right] \\ \pi \cdot D \cdot \delta \cdot \left[\xi_V \cdot \left(T17 - T_{room} \right)^{\frac{4}{3}} + \sigma \cdot \varepsilon_{roof} \cdot \left(T17^4 - T_{room}^4 \right) \right] \\ \pi \cdot D \cdot \delta \cdot \left[\xi_V \cdot \left(T18 - T_{room} \right)^{\frac{4}{3}} + \sigma \cdot \varepsilon_{roof} \cdot \left(T18^4 - T_{room}^4 \right) \right] \\ \pi \cdot D \cdot \delta \cdot \left[\xi_V \cdot \left(T19 - T_{room} \right)^{\frac{4}{3}} + \sigma \cdot \varepsilon_{roof} \cdot \left(T19^4 - T_{room}^4 \right) \right] \\ \pi \cdot D \cdot \delta \cdot \left[\xi_V \cdot \left(T20 - T_{room} \right)^{\frac{4}{3}} + \sigma \cdot \varepsilon_{roof} \cdot \left(T20^4 - T_{room}^4 \right) \right] \\ \pi \cdot D \cdot \delta \cdot \left[\xi_V \cdot \left(T21 - T_{room} \right)^{\frac{4}{3}} + \sigma \cdot \varepsilon_{roof} \cdot \left(T21^4 - T_{room}^4 \right) \right] \end{bmatrix}$$

ARES CORPORATION	CALCULATION SHEET		
Project No. 0509206.01	Calculation No. 0509206.01-M-004	Rev. No. 1	Page No. 46 of 159
Title: DBVS AWTE Thermal Load Inventory			
Prepared By: P.S. Lowery	Date: 2.14.06	Checked By: S.R. Pierce	Date: 2.15.06

$$\begin{bmatrix} \pi \cdot D \cdot \delta \cdot \left[\xi_V \cdot \left(T22 - T_{room} \right)^{\frac{4}{3}} + \sigma \cdot \varepsilon_{rod} \cdot \left(T22^4 - T_{room}^4 \right) \right] \\ \pi \cdot D \cdot \delta \cdot \left[\xi_V \cdot \left(T23 - T_{room} \right)^{\frac{4}{3}} + \sigma \cdot \varepsilon_{rod} \cdot \left(T23^4 - T_{room}^4 \right) \right] \\ \pi \cdot D \cdot \delta \cdot \left[\xi_V \cdot \left(T24 - T_{room} \right)^{\frac{4}{3}} + \sigma \cdot \varepsilon_{rod} \cdot \left(T24^4 - T_{room}^4 \right) \right] \\ \pi \cdot D \cdot \delta \cdot \left[\xi_V \cdot \left(T25 - T_{room} \right)^{\frac{4}{3}} + \sigma \cdot \varepsilon_{rod} \cdot \left(T25^4 - T_{room}^4 \right) \right] - \\ + \frac{\pi}{4} \cdot D^2 \cdot \left[\left(\xi_{H(U)} \cdot \left(T25 - T_{room} \right)^{\frac{4}{3}} + \sigma \cdot \varepsilon_{rod} \cdot \left(T25^4 - T_{room}^4 \right) \right) \right] \end{bmatrix}$$

Calculation Sheet: QAP 3.1, Rev. 6 (11-15-05)

CALCULATION SHEET

Project No. 0509206.01	Calculation No. 0509206.01-M-004	Rev. No. 1	Page No. 47 of 159
Title: DBVS AWTE Thermal Load Inventory			
Prepared By: P.S. Lowery	Date: 2.14.06	Checked By: S.R. Pierce	Date: 2.15.06

Q =

k	Q
1	0
2	0
3	0
4	0
5	0
6	0
7	0
8	0
9	0
10	0
11	0
12	1.652
13	1.536
14	1.288
15	1.1
16	0.955
17	0.842
18	0.752
19	0.681
20	0.624
21	0.579
22	0.543
23	0.516
24	0.495
25	1.003

kW

$$Q_{electrode} := \left(\sum_{k=12}^{25} Q_k \right) \qquad Q_{electrode} = 12.567\ kW$$

Calculation Sheet: QAP 3.1, Rev. 6 (11-15-05)

ARES CORPORATION	CALCULATION SHEET		
Project No. 0509206.01	Calculation No. 0509206.01-M-004	Rev. No. 1	Page No. 48 of 159
Title: DBVS AWTE Thermal Load Inventory			
Prepared By: P.S. Lowery	Date: 2.14.06	Checked By: S.R. Pierce	Date: 2.15.06

APPENDIX D

MATHCAD MODEL TO ESTIMATE THE TEMPERATURE DISTRIBUTION AND HEAT LOSS OFF THE EXPOSED MATERIAL FEED CHUTE SURFACES IN THE AWTE

ARES CORPORATION	CALCULATION SHEET		
Project No. 0509206.01	Calculation No. 0509206.01-M-004	Rev. No. 1	Page No. 49 of 159
Title: DBVS AWTE Thermal Load Inventory			
Prepared By: P.S. Lowery	Date: 2.14.06	Checked By: S.R. Pierce	Date: 2.15.06

DBVS AWTE Feed Chute Thermal Load Calc

°C ≡ 1 °F ≡ 1

$KtoC(x) := \left(\frac{x}{K} - 273.15\right)$ $FtoC(x) := \frac{5}{9}\left(\frac{x}{°F} - 32\right)$

ORIGIN = 1

Model Parameters:

$\sigma := 5.67 \cdot 10^{-8} \frac{W}{m^2 \cdot K^4}$

$k_{stl} := 60.5 \frac{W}{m \cdot K}$

$D := 8in$ $t := 0.148in$ $l_{hot} := 12ft$ $\delta_{hc} := 12in$

$\varepsilon_{stl} := 0.85$

$\varepsilon_M := 0.7$ $A_M := \frac{(22ft)(15.5ft)}{\pi \cdot D \cdot \delta}$ $A_M = 57.773$ $T_M := (1050 + 273.15)K$ Melt Top Surface Temperature

Natural Convection Heat Transfer Coefficient Correlation Parameters

Natural convection heat transfer coefficients are modeled using correlations from Holman, Heat Transfer, 3rd Edition, p. 219. They are of the form ...

$h = \xi_o (\Delta T)^{1/3}$

where the correlation parameter, ξ_o, reflects the shape and orientation of the surface (the subscript "o" indicates the orientation – e.g., V -> vertical, HU -> horizontal, heated surface facing up, and so on).

$\xi_V := 1.32 \frac{W}{m^2 \cdot \sqrt[3]{K^4}}$ $\xi_{HU} := 1.52 \frac{W}{m^2 \cdot \sqrt[3]{K^4}}$

$T_0 := (FtoC(875°F) + 273.15)K$ Temperature at the base of the portion of the chute "exposed" to the off-gas plenum region

$T_{wall} := (570 + 273.15)K$ Temperature used to represent the O/G wall temperatures for the purposes of radiant heat transfer from the electrode surface

$T_{OG} := (FtoC(875°F) + 273.15)K$ Temperature of the off-gas plenum gases

$T_X := (570 + 273.15)K$ Temperature of the air space between the O/G hood and the AWTE floor

$T_{room} := (FtoC(77°F) + 273.15)K$ Temperature of the AWTE room and the associated internal equipment & structures

Nodes 1 thru 12 represent the steel chute
Node 101 thru 112 represent the air column within the steel chute

Load matrix of view factors, F

$F_{1M} := 0.151$ $F_{2M} := 0.011$ $F_{3M} := 0.002$ $F_{4M} := 0.001$ $F_{5M} := 0.0001$ View factors from the cylindrical segments to the melt surface

Page 1

Calculation Sheet: QAP 3.1, Rev. 6 (11-15-05)

ARES CORPORATION	CALCULATION SHEET		
Project No. 0509206.01	Calculation No. 0509206.01-M-004	Rev. No. 1	Page No. 50 of 159
Title: DBVS AWTE Thermal Load Inventory			
Prepared By: P.S. Lowery	Date: 2.14.06	Checked By: S.R. Pierce	Date: 2.15.06

DBVS AWTE Feed Chute Thermal Load Calc

Estimate the mass flow associated with the "Chimney affect" ...

Model the fluid as air

Properties at 875°F are ... $\rho_A := 0.5043\frac{kg}{m^3}$ $k_A := 0.040\frac{W}{m \cdot K}$ $C_p := 1080\frac{J}{kg \cdot K}$

Properties at 77°F are ... $\rho_{77} := 1.186\frac{kg}{m^3}$

Average density is ... $\rho_{avg} := \frac{1}{2}\cdot(\rho_{77} + \rho_A)$ $\rho_{avg} = 0.845\frac{kg}{m^3}$

Using the 1D momentum equation, the bulk flow speed is obtained from ...

$u^2 = 2 \cdot g \cdot \Delta\rho \cdot H/\rho_{avg}$

Bulk flow speed is ... $u_{bar} := \sqrt{\frac{2 \cdot g \cdot (\rho_{77} - \rho_A) \cdot L}{\rho_{avg}}}$ $u_{bar} = 7.607\frac{m}{s}$

The corresponding mass flow rate associated with this density difference is ...

$m_{dot} := \rho_{avg} \cdot u_{bar} \cdot \frac{\pi}{4} \cdot D^2$ $m_{dot} = 0.208\frac{kg}{s}$

Page 2

Calculation Sheet: QAP 3.1, Rev. 6 (11-15-05)

ARES CORPORATION	CALCULATION SHEET		
Project No. 0509206.01	Calculation No. 0509206.01-M-004	Rev. No. 1	Page No. 51 of 159
Title: DBVS AWTE Thermal Load Inventory			
Prepared By: P.S. Lowery	Date: 2.14.06	Checked By: S.R. Pierce	Date: 2.15.06

DBVS AWTE Feed Chute Thermal Load Calc

$$F_{ij} := \begin{pmatrix} 0.697 & 0.140 & 0.009 & 0.002 & 0 & 0 & 0 & 0 & 0 & 0 & 0 & 0 \\ 0.140 & 0.697 & 0.140 & 0.009 & 0.002 & 0 & 0 & 0 & 0 & 0 & 0 & 0 \\ 0.009 & 0.140 & 0.697 & 0.140 & 0.009 & 0.002 & 0 & 0 & 0 & 0 & 0 & 0 \\ 0.002 & 0.009 & 0.140 & 0.697 & 0.140 & 0.009 & 0.002 & 0 & 0 & 0 & 0 & 0 \\ 0 & 0.002 & 0.009 & 0.140 & 0.697 & 0.140 & 0.009 & 0.002 & 0 & 0 & 0 & 0 \\ 0 & 0 & 0.002 & 0.009 & 0.140 & 0.697 & 0.140 & 0.009 & 0.002 & 0 & 0 & 0 \\ 0 & 0 & 0 & 0.002 & 0.009 & 0.140 & 0.697 & 0.140 & 0.009 & 0.002 & 0 & 0 \\ 0 & 0 & 0 & 0 & 0.002 & 0.009 & 0.140 & 0.697 & 0.140 & 0.009 & 0.002 & 0 \\ 0 & 0 & 0 & 0 & 0 & 0.002 & 0.009 & 0.140 & 0.697 & 0.140 & 0.009 & 0.002 \\ 0 & 0 & 0 & 0 & 0 & 0 & 0.002 & 0.009 & 0.140 & 0.697 & 0.140 & 0.009 \\ 0 & 0 & 0 & 0 & 0 & 0 & 0 & 0.002 & 0.009 & 0.140 & 0.697 & 0.140 \\ 0 & 0 & 0 & 0 & 0 & 0 & 0 & 0 & 0.002 & 0.009 & 0.140 & 0.697 \end{pmatrix}$$

iew factors from a
ylindrical segment to its
eighboring cylindrical
egments. For example,
$_{1,3}$ is the view factor from
egment 1 in the model to
egment 3.
$_{1,3}=F_{3,1}=0.009$

F =

	1	2	3	4	5	6	7	8	9	10	11	12
1	0.697	0.14	0.009	0.002	0	0	0	0	0	0	0	0
2	0.14	0.697	0.14	0.009	0.002	0	0	0	0	0	0	0
3	0.009	0.14	0.697	0.14	0.009	0.002	0	0	0	0	0	0
4	0.002	0.009	0.14	0.697	0.14	0.009	0.002	0	0	0	0	0
5	0	0.002	0.009	0.14	0.697	0.14	0.009	0.002	0	0	0	0
6	0	0	0.002	0.009	0.14	0.697	0.14	0.009	0.002	0	0	0
7	0	0	0	0.002	0.009	0.14	0.697	0.14	0.009	0.002	0	0
8	0	0	0	0	0.002	0.009	0.14	0.697	0.14	0.009	0.002	0
9	0	0	0	0	0	0.002	0.009	0.14	0.697	0.14	0.009	0.002
10	0	0	0	0	0	0	0.002	0.009	0.14	0.697	0.14	0.009
11	0	0	0	0	0	0	0	0.002	0.009	0.14	0.697	0.14
12	0	0	0	0	0	0	0	0	0.002	0.009	0.14	0.697

Initial guess for temperature d istribution ...

$T_1 := (600 + 273.15)K$ $T_{101} := (600 + 273.15)K$

$T_2 := (600 + 273.15)K$ $T_{102} := (600 + 273.15)K$

$T_3 := (600 + 273.15)K$ $T_{103} := (600 + 273.15)K$

$T_4 := (600 + 273.15)K$ $T_{104} := (600 + 273.15)K$

$T_5 := (600 + 273.15)K$ $T_{105} := (600 + 273.15)K$

$T_6 := (600 + 273.15)K$ $T_{106} := (600 + 273.15)K$

$T_7 := (600 + 273.15)K$ $T_{107} := (600 + 273.15)K$

$T_8 := (600 + 273.15)K$ $T_{108} := (600 + 273.15)K$

$T_9 := (600 + 273.15)K$ $T_{109} := (600 + 273.15)K$

$T_{10} := (600 + 273.15)K$ $T_{110} := (600 + 273.15)K$

$T_{11} := (600 + 273.15)K$ $T_{111} := (600 + 273.15)K$

$T_{12} := (600 + 273.15)K$ $T_{112} := (600 + 273.15)K$

Page 3

Calculation Sheet. QAP 3.1, Rev. 6 (11-15-05)

ARES CORPORATION	CALCULATION SHEET		
Project No. 0509206.01	Calculation No. 0509206.01-M-004	Rev. No. 1	Page No. 52 of 159
Title: DBVS AWTE Thermal Load Inventory			
Prepared By: P.S. Lowery	Date: 2.14.06	Checked By: S.R. Pierce	Date: 2.15.06

DBVS AWTE Feed Chute Thermal Load Calc

Set-up a vector of heat sink values for direct cooling of each of the 12 segments used to model the chute. This energy will be removed directly from its associated chute segment in the model. For example, An entry of x in vector element $q_{cool}(5)$ will remove x Watts of from that segment.

$$q_{cool} := \begin{pmatrix} 0W \\ 0W \\ 0W \\ 0W \\ 0W \\ 0W \\ 0W \\ 0W \\ 0W \\ 0W \\ 0W \\ 0W \end{pmatrix}$$

ARES CORPORATION	CALCULATION SHEET		
Project No. 0509206.01	Calculation No. 0509206.01-M-004	Rev. No. 1	Page No. 53 of 159
Title: DBVS AWTE Thermal Load Inventory			
Prepared By: P.S. Lowery	Date: 2.14.06	Checked By: S.R. Pierce	Date: 2.15.06

DBVS AWTE Feed Chute Thermal Load Calc

Given

First define the energy balance equations for the steel chute elements ...

$$\frac{T_2 - 2\cdot T_1 + T_0}{s^2} - \frac{\xi_V}{k_{stl}\cdot t}\left[\left(\left|T_1 - T_{101}\right|\right)^{\frac{1}{3}}\cdot\left(T_1 - T_{101}\right) + \left(\left|T_1 - T_{room}\right|\right)^{\frac{1}{3}}\cdot\left(T_1 - T_{room}\right)\right] - = 0$$

$$+0 - \frac{\sigma\cdot\varepsilon_{stl}}{k_{stl}\cdot t}\cdot\left(T_1^{\,4} - T_{room}^{\,4}\right) - \frac{\sigma}{k_{stl}\cdot t}\cdot\frac{T_1^{\,4} - T_M^{\,4}}{\left(\frac{1-\varepsilon_{stl}}{\varepsilon_{stl}}\right) + \frac{1}{F_{1M}} + \left(\frac{1-\varepsilon_M}{\varepsilon_M\cdot A_M}\right)} -$$

$$+0 - \frac{\sigma}{k_{stl}\cdot t}\cdot\frac{T_1^{\,4} - T_2^{\,4}}{\left(\frac{1-\varepsilon_{stl}}{\varepsilon_{stl}}\right) + \frac{1}{F_{1,2}} + \left(\frac{1-\varepsilon_{stl}}{\varepsilon_{stl}}\right)} - \frac{\sigma}{k_{stl}\cdot t}\cdot\frac{T_1^{\,4} - T_3^{\,4}}{\left(\frac{1-\varepsilon_{stl}}{\varepsilon_{stl}}\right) + \frac{1}{F_{1,3}} + \left(\frac{1-\varepsilon_{stl}}{\varepsilon_{stl}}\right)} -$$

$$+0 - \frac{\sigma}{k_{stl}\cdot t}\cdot\frac{T_1^{\,4} - T_4^{\,4}}{\left(\frac{1-\varepsilon_{stl}}{\varepsilon_{stl}}\right) + \frac{1}{F_{1,4}} + \left(\frac{1-\varepsilon_{stl}}{\varepsilon_{stl}}\right)} - \frac{q_{cool_1}}{\pi\cdot k_{stl}\cdot D\cdot t\cdot\delta}$$

$$\frac{T_3 - 2\cdot T_2 + T_1}{s^2} - \frac{\xi_V}{k_{stl}\cdot t}\left[\left(\left|T_2 - T_{102}\right|\right)^{\frac{1}{3}}\cdot\left(T_2 - T_{102}\right) + \left(\left|T_2 - T_{room}\right|\right)^{\frac{1}{3}}\cdot\left(T_2 - T_{room}\right)\right] - = 0$$

$$+0 - \frac{\sigma\cdot\varepsilon_{stl}}{k_{stl}\cdot t}\cdot\left(T_2^{\,4} - T_{room}^{\,4}\right) - \frac{\sigma}{k_{stl}\cdot t}\cdot\frac{T_2^{\,4} - T_M^{\,4}}{\left(\frac{1-\varepsilon_{stl}}{\varepsilon_{stl}}\right) + \frac{1}{F_{2M}} + \left(\frac{1-\varepsilon_M}{\varepsilon_M\cdot A_M}\right)} -$$

$$+0 - \frac{\sigma}{k_{stl}\cdot t}\cdot\frac{T_2^{\,4} - T_1^{\,4}}{\left(\frac{1-\varepsilon_{stl}}{\varepsilon_{stl}}\right) + \frac{1}{F_{2,1}} + \left(\frac{1-\varepsilon_{stl}}{\varepsilon_{stl}}\right)} - \frac{\sigma}{k_{stl}\cdot t}\cdot\frac{T_2^{\,4} - T_3^{\,4}}{\left(\frac{1-\varepsilon_{stl}}{\varepsilon_{stl}}\right) + \frac{1}{F_{2,3}} + \left(\frac{1-\varepsilon_{stl}}{\varepsilon_{stl}}\right)} -$$

$$+0 - \frac{\sigma}{k_{stl}\cdot t}\cdot\frac{T_2^{\,4} - T_4^{\,4}}{\left(\frac{1-\varepsilon_{stl}}{\varepsilon_{stl}}\right) + \frac{1}{F_{2,4}} + \left(\frac{1-\varepsilon_{stl}}{\varepsilon_{stl}}\right)} - \frac{\sigma}{k_{stl}\cdot t}\cdot\frac{T_2^{\,4} - T_5^{\,4}}{\left(\frac{1-\varepsilon_{stl}}{\varepsilon_{stl}}\right) + \frac{1}{F_{2,5}} + \left(\frac{1-\varepsilon_{stl}}{\varepsilon_{stl}}\right)} - \frac{q_{cool_2}}{\pi\cdot k_{stl}\cdot D\cdot t\cdot\delta}$$

Page 5

ARES CORPORATION	CALCULATION SHEET		
Project No. 0509206.01	Calculation No. 0509206.01-M-004	Rev. No. 1	Page No. 54 of 159
Title: DBVS AWTE Thermal Load Inventory			
Prepared By: P.S. Lowery	Date: 2.14.06	Checked By: S.R. Pierce	Date: 2.15.06

DBVS AWTE Feed Chute Thermal Load Calc

$$\frac{T_4 - 2\cdot T_3 + T_2}{\delta^2} - \frac{\delta V}{k_{stl}\cdot t}\left[\left(\left|T_3 - T_{103}\right|\right)^{\frac{1}{3}}\cdot\left(T_3 - T_{103}\right) + \left(\left|T_3 - T_{room}\right|\right)^{\frac{1}{3}}\cdot\left(T_3 - T_{room}\right)\right] \cdots = 0$$

$$+0 - \frac{\sigma\cdot\varepsilon_{stl}}{k_{stl}\cdot t}\left(T_3^{\,4} - T_{room}^{\,4}\right) - \frac{\sigma}{k_{stl}\cdot t}\cdot\frac{T_3^{\,4} - T_M^{\,4}}{\left(\frac{1-\varepsilon_{stl}}{\varepsilon_{stl}}\right) + \frac{1}{F_{3M}} + \left(\frac{1-\varepsilon_M}{\varepsilon_M\cdot A_M}\right)} \cdots$$

$$+0 - \frac{\sigma}{k_{stl}\cdot t}\cdot\frac{T_3^{\,4} - T_1^{\,4}}{\left(\frac{1-\varepsilon_{stl}}{\varepsilon_{stl}}\right) + \frac{1}{F_{3,1}} + \left(\frac{1-\varepsilon_{stl}}{\varepsilon_{stl}}\right)} - \frac{\sigma}{k_{stl}\cdot t}\cdot\frac{T_3^{\,4} - T_2^{\,4}}{\left(\frac{1-\varepsilon_{stl}}{\varepsilon_{stl}}\right) + \frac{1}{F_{3,2}} + \left(\frac{1-\varepsilon_{stl}}{\varepsilon_{stl}}\right)} \cdots$$

$$+0 - \frac{\sigma}{k_{stl}\cdot t}\cdot\frac{T_3^{\,4} - T_4^{\,4}}{\left(\frac{1-\varepsilon_{stl}}{\varepsilon_{stl}}\right) + \frac{1}{F_{3,4}} + \left(\frac{1-\varepsilon_{stl}}{\varepsilon_{stl}}\right)} - \frac{\sigma}{k_{stl}\cdot t}\cdot\frac{T_3^{\,4} - T_5^{\,4}}{\left(\frac{1-\varepsilon_{stl}}{\varepsilon_{stl}}\right) + \frac{1}{F_{3,5}} + \left(\frac{1-\varepsilon_{stl}}{\varepsilon_{stl}}\right)} \cdots$$

$$+0 - \frac{\sigma}{k_{stl}\cdot t}\cdot\frac{T_3^{\,4} - T_6^{\,4}}{\left(\frac{1-\varepsilon_{stl}}{\varepsilon_{stl}}\right) + \frac{1}{F_{3,6}} + \left(\frac{1-\varepsilon_{stl}}{\varepsilon_{stl}}\right)} - \frac{q_{cool_3}}{\pi k_{stl}\cdot D\cdot t\cdot\delta}$$

$$\frac{T_5 - 2\cdot T_4 + T_3}{\delta^2} - \frac{\delta V}{k_{stl}\cdot t}\left[\left(\left|T_4 - T_{104}\right|\right)^{\frac{1}{3}}\cdot\left(T_4 - T_{104}\right) + \left(\left|T_4 - T_{room}\right|\right)^{\frac{1}{3}}\cdot\left(T_4 - T_{room}\right)\right] \cdots = 0$$

$$+0 - \frac{\sigma\cdot\varepsilon_{stl}}{k_{stl}\cdot t}\left(T_4^{\,4} - T_{room}^{\,4}\right) - \frac{\sigma}{k_{stl}\cdot t}\cdot\frac{T_4^{\,4} - T_M^{\,4}}{\left(\frac{1-\varepsilon_{stl}}{\varepsilon_{stl}}\right) + \frac{1}{F_{4M}} + \left(\frac{1-\varepsilon_M}{\varepsilon_M\cdot A_M}\right)} \cdots$$

$$+0 - \frac{\sigma}{k_{stl}\cdot t}\cdot\frac{T_4^{\,4} - T_1^{\,4}}{\left(\frac{1-\varepsilon_{stl}}{\varepsilon_{stl}}\right) + \frac{1}{F_{4,1}} + \left(\frac{1-\varepsilon_{stl}}{\varepsilon_{stl}}\right)} - \frac{\sigma}{k_{stl}\cdot t}\cdot\frac{T_4^{\,4} - T_2^{\,4}}{\left(\frac{1-\varepsilon_{stl}}{\varepsilon_{stl}}\right) + \frac{1}{F_{4,2}} + \left(\frac{1-\varepsilon_{stl}}{\varepsilon_{stl}}\right)} \cdots$$

$$+0 - \frac{\sigma}{k_{stl}\cdot t}\cdot\frac{T_4^{\,4} - T_3^{\,4}}{\left(\frac{1-\varepsilon_{stl}}{\varepsilon_{stl}}\right) + \frac{1}{F_{4,3}} + \left(\frac{1-\varepsilon_{stl}}{\varepsilon_{stl}}\right)} - \frac{\sigma}{k_{stl}\cdot t}\cdot\frac{T_4^{\,4} - T_5^{\,4}}{\left(\frac{1-\varepsilon_{stl}}{\varepsilon_{stl}}\right) + \frac{1}{F_{4,5}} + \left(\frac{1-\varepsilon_{stl}}{\varepsilon_{stl}}\right)} \cdots$$

$$+0 - \frac{\sigma}{k_{stl}\cdot t}\cdot\frac{T_4^{\,4} - T_6^{\,4}}{\left(\frac{1-\varepsilon_{stl}}{\varepsilon_{stl}}\right) + \frac{1}{F_{4,6}} + \left(\frac{1-\varepsilon_{stl}}{\varepsilon_{stl}}\right)} - \frac{\sigma}{k_{stl}\cdot t}\cdot\frac{T_4^{\,4} - T_7^{\,4}}{\left(\frac{1-\varepsilon_{stl}}{\varepsilon_{stl}}\right) + \frac{1}{F_{4,7}} + \left(\frac{1-\varepsilon_{stl}}{\varepsilon_{stl}}\right)} - \frac{q_{cool_4}}{\pi k_{stl}\cdot D\cdot t\cdot\delta}$$

Page 6

ARES CORPORATION	CALCULATION SHEET		
Project No. 0509206.01	Calculation No. 0509206.01-M-004	Rev. No. 1	Page No. 55 of 159
Title: DBVS AWTE Thermal Load Inventory			
Prepared By: P.S. Lowery	Date: 2.14.06	Checked By: S.R. Pierce	Date: 2.15.06

DBVS AWTE Feed Chute Thermal Load Calc

$$\frac{T_6 - 2\cdot T_5 + T_4}{\delta^2} - \frac{\xi_V}{k_{stl}\cdot t}\left[\left(\left|T_5 - T_{105}\right|\right)^{\frac{1}{3}}\cdot\left(T_5 - T_{105}\right) + \left(\left|T_5 - T_{room}\right|\right)^{\frac{1}{3}}\cdot\left(T_5 - T_{room}\right)\right] \cdots = 0$$

$$+0 - \frac{\sigma\cdot\varepsilon_{stl}}{k_{stl}\cdot t}\left(T_5^{\,4} - T_{room}^{\,4}\right) - \frac{\sigma}{k_{stl}\cdot t}\cdot\frac{T_5^{\,4} - T_M^{\,4}}{\left(\frac{1-\varepsilon_{stl}}{\varepsilon_{stl}}\right) + \frac{1}{F_{5,M}} + \left(\frac{1-\varepsilon_M}{\varepsilon_M\cdot A_{5,M}}\right)} \cdots$$

$$+0 - \frac{\sigma}{k_{stl}\cdot t}\cdot\frac{T_5^{\,4} - T_2^{\,4}}{\left(\frac{1-\varepsilon_{stl}}{\varepsilon_{stl}}\right) + \frac{1}{F_{5,2}} + \left(\frac{1-\varepsilon_{stl}}{\varepsilon_{stl}}\right)} \cdots$$

$$+0 - \frac{\sigma}{k_{stl}\cdot t}\cdot\frac{T_5^{\,4} - T_3^{\,4}}{\left(\frac{1-\varepsilon_{stl}}{\varepsilon_{stl}}\right) + \frac{1}{F_{5,3}} + \left(\frac{1-\varepsilon_{stl}}{\varepsilon_{stl}}\right)} - \frac{\sigma}{k_{stl}\cdot t}\cdot\frac{T_5^{\,4} - T_4^{\,4}}{\left(\frac{1-\varepsilon_{stl}}{\varepsilon_{stl}}\right) + \frac{1}{F_{5,4}} + \left(\frac{1-\varepsilon_{stl}}{\varepsilon_{stl}}\right)} \cdots$$

$$+0 - \frac{\sigma}{k_{stl}\cdot t}\cdot\frac{T_5^{\,4} - T_6^{\,4}}{\left(\frac{1-\varepsilon_{stl}}{\varepsilon_{stl}}\right) + \frac{1}{F_{5,6}} + \left(\frac{1-\varepsilon_{stl}}{\varepsilon_{stl}}\right)} - \frac{\sigma}{k_{stl}\cdot t}\cdot\frac{T_5^{\,4} - T_7^{\,4}}{\left(\frac{1-\varepsilon_{stl}}{\varepsilon_{stl}}\right) + \frac{1}{F_{5,7}} + \left(\frac{1-\varepsilon_{stl}}{\varepsilon_{stl}}\right)} \cdots$$

$$+0 - \frac{\sigma}{k_{stl}\cdot t}\cdot\frac{T_5^{\,4} - T_8^{\,4}}{\left(\frac{1-\varepsilon_{stl}}{\varepsilon_{stl}}\right) + \frac{1}{F_{5,8}} + \left(\frac{1-\varepsilon_{stl}}{\varepsilon_{stl}}\right)} - \frac{q_{cool_5}}{\pi k_{stl}\cdot D\cdot t\cdot\delta}$$

$$\frac{T_7 - 2\cdot T_6 + T_5}{\delta^2} - \frac{\xi_V}{k_{stl}\cdot t}\left[\left(\left|T_6 - T_{106}\right|\right)^{\frac{1}{3}}\cdot\left(T_6 - T_{106}\right) + \left(\left|T_6 - T_{room}\right|\right)^{\frac{1}{3}}\cdot\left(T_6 - T_{room}\right)\right] \cdots = 0$$

$$+0 - \frac{\sigma\cdot\varepsilon_{stl}}{k_{stl}\cdot t}\left(T_6^{\,4} - T_{room}^{\,4}\right) - \frac{\sigma}{k_{stl}\cdot t}\cdot\frac{T_6^{\,4} - T_3^{\,4}}{\left(\frac{1-\varepsilon_{stl}}{\varepsilon_{stl}}\right) + \frac{1}{F_{6,3}} + \left(\frac{1-\varepsilon_{stl}}{\varepsilon_{stl}}\right)} \cdots$$

$$+0 - \frac{\sigma}{k_{stl}\cdot t}\cdot\frac{T_6^{\,4} - T_4^{\,4}}{\left(\frac{1-\varepsilon_{stl}}{\varepsilon_{stl}}\right) + \frac{1}{F_{6,4}} + \left(\frac{1-\varepsilon_{stl}}{\varepsilon_{stl}}\right)} - \frac{\sigma}{k_{stl}\cdot t}\cdot\frac{T_6^{\,4} - T_5^{\,4}}{\left(\frac{1-\varepsilon_{stl}}{\varepsilon_{stl}}\right) + \frac{1}{F_{6,5}} + \left(\frac{1-\varepsilon_{stl}}{\varepsilon_{stl}}\right)} \cdots$$

$$+0 - \frac{\sigma}{k_{stl}\cdot t}\cdot\frac{T_6^{\,4} - T_7^{\,4}}{\left(\frac{1-\varepsilon_{stl}}{\varepsilon_{stl}}\right) + \frac{1}{F_{6,7}} + \left(\frac{1-\varepsilon_{stl}}{\varepsilon_{stl}}\right)} - \frac{\sigma}{k_{stl}\cdot t}\cdot\frac{T_6^{\,4} - T_8^{\,4}}{\left(\frac{1-\varepsilon_{stl}}{\varepsilon_{stl}}\right) + \frac{1}{F_{6,8}} + \left(\frac{1-\varepsilon_{stl}}{\varepsilon_{stl}}\right)} \cdots$$

$$+0 - \frac{\sigma}{k_{stl}\cdot t}\cdot\frac{T_6^{\,4} - T_9^{\,4}}{\left(\frac{1-\varepsilon_{stl}}{\varepsilon_{stl}}\right) + \frac{1}{F_{6,9}} + \left(\frac{1-\varepsilon_{stl}}{\varepsilon_{stl}}\right)} - \frac{q_{cool_6}}{\pi k_{stl}\cdot D\cdot t\cdot\delta}$$

Page 7

ARES CORPORATION	CALCULATION SHEET		
Project No. 0509206.01	Calculation No. 0509206.01-M-004	Rev. No. 1	Page No. 56 of 159
Title: DBVS AWTE Thermal Load Inventory			
Prepared By: P.S. Lowery	Date: 2.14.06	Checked By: S.R. Pierce	Date: 2.15.06

DBVS AWTE Feed Chute Thermal Load Calc

$$\frac{T_8 - 2\cdot T_7 + T_6}{\delta^2} - \frac{\xi v}{k_{stl}\cdot t}\left[\left(\left|T_7 - T_{107}\right|\right)^{\frac{1}{3}}\cdot\left(T_7 - T_{107}\right) + \left(\left|T_7 - T_{room}\right|\right)^{\frac{1}{3}}\cdot\left(T_7 - T_{room}\right)\right] \ldots = 0$$

$$+0 - \frac{\sigma\cdot\varepsilon_{stl}}{k_{stl}\cdot t}\left(T_7^{\,4} - T_{room}^{\,4}\right) - \frac{\sigma}{k_{stl}\cdot t}\cdot\frac{T_7^{\,4} - T_4^{\,4}}{\left(\frac{1-\varepsilon_{stl}}{\varepsilon_{stl}}\right) + \frac{1}{F_{7,4}} + \left(\frac{1-\varepsilon_{stl}}{\varepsilon_{stl}}\right)} \ldots$$

$$+0 - \frac{\sigma}{k_{stl}\cdot t}\cdot\frac{T_7^{\,4} - T_5^{\,4}}{\left(\frac{1-\varepsilon_{stl}}{\varepsilon_{stl}}\right) + \frac{1}{F_{7,5}} + \left(\frac{1-\varepsilon_{stl}}{\varepsilon_{stl}}\right)} - \frac{\sigma}{k_{stl}\cdot t}\cdot\frac{T_7^{\,4} - T_6^{\,4}}{\left(\frac{1-\varepsilon_{stl}}{\varepsilon_{stl}}\right) + \frac{1}{F_{7,6}} + \left(\frac{1-\varepsilon_{stl}}{\varepsilon_{stl}}\right)} \ldots$$

$$+0 - \frac{\sigma}{k_{stl}\cdot t}\cdot\frac{T_7^{\,4} - T_8^{\,4}}{\left(\frac{1-\varepsilon_{stl}}{\varepsilon_{stl}}\right) + \frac{1}{F_{7,8}} + \left(\frac{1-\varepsilon_{stl}}{\varepsilon_{stl}}\right)} - \frac{\sigma}{k_{stl}\cdot t}\cdot\frac{T_7^{\,4} - T_9^{\,4}}{\left(\frac{1-\varepsilon_{stl}}{\varepsilon_{stl}}\right) + \frac{1}{F_{7,9}} + \left(\frac{1-\varepsilon_{stl}}{\varepsilon_{stl}}\right)} \ldots$$

$$+0 - \frac{\sigma}{k_{stl}\cdot t}\cdot\frac{T_7^{\,4} - T_{10}^{\,4}}{\left(\frac{1-\varepsilon_{stl}}{\varepsilon_{stl}}\right) + \frac{1}{F_{7,10}} + \left(\frac{1-\varepsilon_{stl}}{\varepsilon_{stl}}\right)} - \frac{q_{cool_7}}{\pi k_{stl}\cdot D\cdot t\cdot S}$$

$$\frac{T_9 - 2\cdot T_8 + T_7}{\delta^2} - \frac{\xi v}{k_{stl}\cdot t}\left[\left(\left|T_8 - T_{108}\right|\right)^{\frac{1}{3}}\cdot\left(T_8 - T_{108}\right) + \left(\left|T_8 - T_{room}\right|\right)^{\frac{1}{3}}\cdot\left(T_8 - T_{room}\right)\right] \ldots = 0$$

$$+0 - \frac{\sigma\cdot\varepsilon_{stl}}{k_{stl}\cdot t}\left(T_8^{\,4} - T_{room}^{\,4}\right) - \frac{\sigma}{k_{stl}\cdot t}\cdot\frac{T_8^{\,4} - T_5^{\,4}}{\left(\frac{1-\varepsilon_{stl}}{\varepsilon_{stl}}\right) + \frac{1}{F_{8,5}} + \left(\frac{1-\varepsilon_{stl}}{\varepsilon_{stl}}\right)} \ldots$$

$$+0 - \frac{\sigma}{k_{stl}\cdot t}\cdot\frac{T_8^{\,4} - T_6^{\,4}}{\left(\frac{1-\varepsilon_{stl}}{\varepsilon_{stl}}\right) + \frac{1}{F_{8,6}} + \left(\frac{1-\varepsilon_{stl}}{\varepsilon_{stl}}\right)} - \frac{\sigma}{k_{stl}\cdot t}\cdot\frac{T_8^{\,4} - T_7^{\,4}}{\left(\frac{1-\varepsilon_{stl}}{\varepsilon_{stl}}\right) + \frac{1}{F_{8,7}} + \left(\frac{1-\varepsilon_{stl}}{\varepsilon_{stl}}\right)} \ldots$$

$$+0 - \frac{\sigma}{k_{stl}\cdot t}\cdot\frac{T_8^{\,4} - T_9^{\,4}}{\left(\frac{1-\varepsilon_{stl}}{\varepsilon_{stl}}\right) + \frac{1}{F_{8,9}} + \left(\frac{1-\varepsilon_{stl}}{\varepsilon_{stl}}\right)} - \frac{\sigma}{k_{stl}\cdot t}\cdot\frac{T_8^{\,4} - T_{10}^{\,4}}{\left(\frac{1-\varepsilon_{stl}}{\varepsilon_{stl}}\right) + \frac{1}{F_{8,10}} + \left(\frac{1-\varepsilon_{stl}}{\varepsilon_{stl}}\right)} \ldots$$

$$+0 - \frac{\sigma}{k_{stl}\cdot t}\cdot\frac{T_8^{\,4} - T_{11}^{\,4}}{\left(\frac{1-\varepsilon_{stl}}{\varepsilon_{stl}}\right) + \frac{1}{F_{8,11}} + \left(\frac{1-\varepsilon_{stl}}{\varepsilon_{stl}}\right)} - \frac{q_{cool_8}}{\pi k_{stl}\cdot D\cdot t\cdot S}$$

Page 8

Calculation Sheet: QAP 3.1, Rev. 6 (11-15-05)

ARES CORPORATION	CALCULATION SHEET		
Project No. 0509206.01	Calculation No. 0509206.01-M-004	Rev. No. 1	Page No. 57 of 159
Title: DBVS AWTE Thermal Load Inventory			
Prepared By: P.S. Lowery	Date: 2.14.06	Checked By: S.R. Pierce	Date: 2.15.06

DBVS AWTE Feed Chute Thermal Load Calc

$$\frac{T_{10} - 2\cdot T_9 + T_8}{\delta^2} \ldots = 0$$

$$+ 0 - \frac{\xi_V}{k_{stl}\cdot t}\left[\left(\left|T_9 - T_{109}\right|\right)^{\frac{1}{3}}\cdot\left(T_9 - T_{109}\right) + \left(\left|T_9 - T_{room}\right|\right)^{\frac{1}{3}}\cdot\left(T_9 - T_{room}\right)\right] \ldots$$

$$+ 0 - \frac{\sigma\cdot\varepsilon_{stl}}{k_{stl}\cdot t}\left(T_9^{\,4} - T_{room}^{\,4}\right) - \frac{\sigma}{k_{stl}\cdot t}\cdot\frac{T_9^{\,4} - T_6^{\,4}}{\left(\frac{1-\varepsilon_{stl}}{\varepsilon_{stl}}\right) + \frac{1}{F_{9,6}} + \left(\frac{1-\varepsilon_{stl}}{\varepsilon_{stl}}\right)} \ldots$$

$$+ 0 - \frac{\sigma}{k_{stl}\cdot t}\cdot\frac{T_9^{\,4} - T_7^{\,4}}{\left(\frac{1-\varepsilon_{stl}}{\varepsilon_{stl}}\right) + \frac{1}{F_{9,7}} + \left(\frac{1-\varepsilon_{stl}}{\varepsilon_{stl}}\right)} - \frac{\sigma}{k_{stl}\cdot t}\cdot\frac{T_9^{\,4} - T_8^{\,4}}{\left(\frac{1-\varepsilon_{stl}}{\varepsilon_{stl}}\right) + \frac{1}{F_{9,8}} + \left(\frac{1-\varepsilon_{stl}}{\varepsilon_{stl}}\right)} \ldots$$

$$+ 0 - \frac{\sigma}{k_{stl}\cdot t}\cdot\frac{T_9^{\,4} - T_{10}^{\,4}}{\left(\frac{1-\varepsilon_{stl}}{\varepsilon_{stl}}\right) + \frac{1}{F_{9,10}} + \left(\frac{1-\varepsilon_{stl}}{\varepsilon_{stl}}\right)} - \frac{\sigma}{k_{stl}\cdot t}\cdot\frac{T_9^{\,4} - T_{11}^{\,4}}{\left(\frac{1-\varepsilon_{stl}}{\varepsilon_{stl}}\right) + \frac{1}{F_{9,11}} + \left(\frac{1-\varepsilon_{stl}}{\varepsilon_{stl}}\right)} \ldots$$

$$+ 0 - \frac{\sigma}{k_{stl}\cdot t}\cdot\frac{T_9^{\,4} - T_{12}^{\,4}}{\left(\frac{1-\varepsilon_{stl}}{\varepsilon_{stl}}\right) + \frac{1}{F_{9,12}} + \left(\frac{1-\varepsilon_{stl}}{\varepsilon_{stl}}\right)} - \frac{q_{cool_9}}{\pi k_{stl}\cdot D\cdot t\cdot 5}$$

$$\frac{T_{11} - 2\cdot T_{10} + T_9}{\delta^2} \ldots = 0$$

$$+ 0 - \frac{\xi_V}{k_{stl}\cdot t}\left[\left(\left|T_{10} - T_{110}\right|\right)^{\frac{1}{3}}\cdot\left(T_{10} - T_{110}\right) + \left(\left|T_{10} - T_{room}\right|\right)^{\frac{1}{3}}\cdot\left(T_{10} - T_{room}\right)\right] \ldots$$

$$+ 0 - \frac{\sigma\cdot\varepsilon_{stl}}{k_{stl}\cdot t}\left(T_{10}^{\,4} - T_{room}^{\,4}\right) - \frac{\sigma}{k_{stl}\cdot t}\cdot\frac{T_{10}^{\,4} - T_7^{\,4}}{\left(\frac{1-\varepsilon_{stl}}{\varepsilon_{stl}}\right) + \frac{1}{F_{10,7}} + \left(\frac{1-\varepsilon_{stl}}{\varepsilon_{stl}}\right)} \ldots$$

$$+ 0 - \frac{\sigma}{k_{stl}\cdot t}\cdot\frac{T_{10}^{\,4} - T_8^{\,4}}{\left(\frac{1-\varepsilon_{stl}}{\varepsilon_{stl}}\right) + \frac{1}{F_{10,8}} + \left(\frac{1-\varepsilon_{stl}}{\varepsilon_{stl}}\right)} - \frac{\sigma}{k_{stl}\cdot t}\cdot\frac{T_{10}^{\,4} - T_9^{\,4}}{\left(\frac{1-\varepsilon_{stl}}{\varepsilon_{stl}}\right) + \frac{1}{F_{10,9}} + \left(\frac{1-\varepsilon_{stl}}{\varepsilon_{stl}}\right)} \ldots$$

$$+ 0 - \frac{\sigma}{k_{stl}\cdot t}\cdot\frac{T_{10}^{\,4} - T_{11}^{\,4}}{\left(\frac{1-\varepsilon_{stl}}{\varepsilon_{stl}}\right) + \frac{1}{F_{10,11}} + \left(\frac{1-\varepsilon_{stl}}{\varepsilon_{stl}}\right)} - \frac{\sigma}{k_{stl}\cdot t}\cdot\frac{T_{10}^{\,4} - T_{12}^{\,4}}{\left(\frac{1-\varepsilon_{stl}}{\varepsilon_{stl}}\right) + \frac{1}{F_{10,12}} + \left(\frac{1-\varepsilon_{stl}}{\varepsilon_{stl}}\right)} - \frac{q_{cool_{10}}}{\pi k_{stl}\cdot D\cdot t\cdot 5}$$

Page 9

ARES CORPORATION	CALCULATION SHEET		
Project No. 0509206.01	Calculation No. 0509206.01-M-004	Rev. No. 1	Page No. 58 of 159
Title: DBVS AWTE Thermal Load Inventory			
Prepared By: P.S. Lowery	Date: 2.14.06	Checked By: S.R. Pierce	Date: 2.15.06

DBVS AWTE Feed Chute Thermal Load Calc

$$\frac{T_{12} - 2 \cdot T_{11} + T_{10}}{\delta^2} \ldots = 0$$

$$+ 0 - \frac{\xi_V}{k_{stl} \cdot t} \left[\left(\left| T_{11} - T_{111} \right| \right)^{\frac{1}{3}} \cdot \left(T_{11} - T_{111} \right) + \left(\left| T_{11} - T_{room} \right| \right)^{\frac{1}{3}} \cdot \left(T_{11} - T_{room} \right) \right] \ldots$$

$$+ 0 - \frac{\sigma \cdot \varepsilon_{stl}}{k_{stl} \cdot t} \left(T_{11}^4 - T_{room}^4 \right) - \frac{\sigma}{k_{stl} \cdot t} \cdot \frac{T_{11}^4 - T_8^4}{\left(\frac{1 - \varepsilon_{stl}}{\varepsilon_{stl}} \right) + \frac{1}{F_{11,8}} + \left(\frac{1 - \varepsilon_{stl}}{\varepsilon_{stl}} \right)} \ldots$$

$$+ 0 - \frac{\sigma}{k_{stl} \cdot t} \cdot \frac{T_{11}^4 - T_9^4}{\left(\frac{1 - \varepsilon_{stl}}{\varepsilon_{stl}} \right) + \frac{1}{F_{11,9}} + \left(\frac{1 - \varepsilon_{stl}}{\varepsilon_{stl}} \right)} - \frac{\sigma}{k_{stl} \cdot t} \cdot \frac{T_{11}^4 - T_{10}^4}{\left(\frac{1 - \varepsilon_{stl}}{\varepsilon_{stl}} \right) + \frac{1}{F_{11,10}} + \left(\frac{1 - \varepsilon_{stl}}{\varepsilon_{stl}} \right)} \ldots$$

$$+ 0 - \frac{\sigma}{k_{stl} \cdot t} \cdot \frac{T_{11}^4 - T_{12}^4}{\left(\frac{1 - \varepsilon_{stl}}{\varepsilon_{stl}} \right) + \frac{1}{F_{11,12}} + \left(\frac{1 - \varepsilon_{stl}}{\varepsilon_{stl}} \right)} - \frac{q_{cool_{11}}}{\pi k_{stl} \cdot D \cdot t \cdot \delta}$$

$$\frac{T_{12} - T_{11}}{\delta^2} \ldots = 0$$

$$+ 0 - \frac{\xi_V}{k_{stl} \cdot t} \left[\left(\left| T_{12} - T_{112} \right| \right)^{\frac{1}{3}} \cdot \left(T_{12} - T_{112} \right) + \left(\left| T_{12} - T_{room} \right| \right)^{\frac{1}{3}} \cdot \left(T_{12} - T_{room} \right) \right] \ldots$$

$$+ 0 - \frac{\sigma \cdot \varepsilon_{stl}}{k_{stl} \cdot t} \left(T_{12}^4 - T_{room}^4 \right) - \frac{\sigma}{k_{stl} \cdot t} \cdot \frac{T_{12}^4 - T_9^4}{\left(\frac{1 - \varepsilon_{stl}}{\varepsilon_{stl}} \right) + \frac{1}{F_{12,9}} + \left(\frac{1 - \varepsilon_{stl}}{\varepsilon_{stl}} \right)} \ldots$$

$$+ 0 - \frac{\sigma}{k_{stl} \cdot t} \cdot \frac{T_{12}^4 - T_{10}^4}{\left(\frac{1 - \varepsilon_{stl}}{\varepsilon_{stl}} \right) + \frac{1}{F_{12,10}} + \left(\frac{1 - \varepsilon_{stl}}{\varepsilon_{stl}} \right)} - \frac{\sigma}{k_{stl} \cdot t} \cdot \frac{T_{12}^4 - T_{11}^4}{\left(\frac{1 - \varepsilon_{stl}}{\varepsilon_{stl}} \right) + \frac{1}{F_{12,11}} + \left(\frac{1 - \varepsilon_{stl}}{\varepsilon_{stl}} \right)} - \frac{q_{cool_{12}}}{\pi k_{stl} \cdot D \cdot t \cdot \delta}$$

Page 10

ARES CORPORATION	CALCULATION SHEET		
Project No. 0509206.01	Calculation No. 0509206.01-M-004	Rev. No. 1	Page No. 59 of 159
Title: DBVS AWTE Thermal Load Inventory			
Prepared By: P.S. Lowery	Date: 2.14.06	Checked By: S.R. Pierce	Date: 2.15.06

DBVS AWTE Feed Chute Thermal Load Calc

Now define the energy equations for the air column elements ...

$$\frac{T_{102} - 2\cdot T_{101} + T_0}{\delta^2} - \frac{4\cdot\xi_V}{k_A\cdot D}\cdot\left(\left|T_{101} - T_1\right|\right)^{\frac{1}{3}}\cdot\left(T_{101} - T_1\right) - \frac{4m_{dot}\cdot C_P}{\pi\cdot k_A\cdot D^2\cdot\delta}\cdot\left(T_{101} - T_0\right) = 0$$

$$\frac{T_{103} - 2\cdot T_{102} + T_{101}}{\delta^2} - \frac{4\cdot\xi_V}{k_A\cdot D}\cdot\left(\left|T_{102} - T_2\right|\right)^{\frac{1}{3}}\cdot\left(T_{102} - T_2\right) - \frac{4m_{dot}\cdot C_P}{\pi\cdot k_A\cdot D^2\cdot\delta}\cdot\left(T_{102} - T_{101}\right) = 0$$

$$\frac{T_{104} - 2\cdot T_{103} + T_{102}}{\delta^2} - \frac{4\cdot\xi_V}{k_A\cdot D}\cdot\left(\left|T_{103} - T_3\right|\right)^{\frac{1}{3}}\cdot\left(T_{103} - T_3\right) - \frac{4m_{dot}\cdot C_P}{\pi\cdot k_A\cdot D^2\cdot\delta}\cdot\left(T_{103} - T_{102}\right) = 0$$

$$\frac{T_{105} - 2\cdot T_{104} + T_{103}}{\delta^2} - \frac{4\cdot\xi_V}{k_A\cdot D}\cdot\left(\left|T_{104} - T_4\right|\right)^{\frac{1}{3}}\cdot\left(T_{104} - T_4\right) - \frac{4m_{dot}\cdot C_P}{\pi\cdot k_A\cdot D^2\cdot\delta}\cdot\left(T_{104} - T_{103}\right) = 0$$

$$\frac{T_{106} - 2\cdot T_{105} + T_{104}}{\delta^2} - \frac{4\cdot\xi_V}{k_A\cdot D}\cdot\left(\left|T_{105} - T_5\right|\right)^{\frac{1}{3}}\cdot\left(T_{105} - T_5\right) - \frac{4m_{dot}\cdot C_P}{\pi\cdot k_A\cdot D^2\cdot\delta}\cdot\left(T_{105} - T_{104}\right) = 0$$

$$\frac{T_{107} - 2\cdot T_{106} + T_{105}}{\delta^2} - \frac{4\cdot\xi_V}{k_A\cdot D}\cdot\left(\left|T_{106} - T_6\right|\right)^{\frac{1}{3}}\cdot\left(T_{106} - T_6\right) - \frac{4m_{dot}\cdot C_P}{\pi\cdot k_A\cdot D^2\cdot\delta}\cdot\left(T_{106} - T_{105}\right) = 0$$

$$\frac{T_{108} - 2\cdot T_{107} + T_{106}}{\delta^2} - \frac{4\cdot\xi_V}{k_A\cdot D}\cdot\left(\left|T_{107} - T_7\right|\right)^{\frac{1}{3}}\cdot\left(T_{107} - T_7\right) - \frac{4m_{dot}\cdot C_P}{\pi\cdot k_A\cdot D^2\cdot\delta}\cdot\left(T_{107} - T_{106}\right) = 0$$

$$\frac{T_{109} - 2\cdot T_{108} + T_{107}}{\delta^2} - \frac{4\cdot\xi_V}{k_A\cdot D}\cdot\left(\left|T_{108} - T_8\right|\right)^{\frac{1}{3}}\cdot\left(T_{108} - T_8\right) - \frac{4m_{dot}\cdot C_P}{\pi\cdot k_A\cdot D^2\cdot\delta}\cdot\left(T_{108} - T_{107}\right) = 0$$

$$\frac{T_{110} - 2\cdot T_{109} + T_{108}}{\delta^2} - \frac{4\cdot\xi_V}{k_A\cdot D}\cdot\left(\left|T_{109} - T_9\right|\right)^{\frac{1}{3}}\cdot\left(T_{109} - T_9\right) - \frac{4m_{dot}\cdot C_P}{\pi\cdot k_A\cdot D^2\cdot\delta}\cdot\left(T_{109} - T_{108}\right) = 0$$

Page 11

ARES CORPORATION	CALCULATION SHEET		
Project No. 0509206.01	Calculation No. 0509206.01-M-004	Rev. No. 1	Page No. 60 of 159
Title: DBVS AWTE Thermal Load Inventory			
Prepared By: P.S. Lowery	Date: 2.14.06	Checked By: S.R. Pierce	Date: 2.15.06

DBVS AWTE Feed Chute Thermal Load Calc

$$\frac{T_{111} - 2\cdot T_{110} + T_{109}}{\delta^2} - \frac{4\cdot\delta_V}{k_A\cdot D}\cdot\left(\left|T_{110} - T_{10}\right|\right)^{\frac{1}{3}}\cdot\left(T_{110} - T_{10}\right) - \frac{4m_{dot}\cdot C_P}{\pi\cdot k_A\cdot D^2\cdot\delta}\left(T_{110} - T_{109}\right) = 0$$

$$\frac{T_{112} - 2\cdot T_{111} + T_{110}}{\delta^2} - \frac{4\cdot\delta_V}{k_A\cdot D}\cdot\left(\left|T_{111} - T_{11}\right|\right)^{\frac{1}{3}}\cdot\left(T_{111} - T_{11}\right) - \frac{4m_{dot}\cdot C_P}{\pi\cdot k_A\cdot D^2\cdot\delta}\left(T_{111} - T_{110}\right) = 0$$

$$\frac{T_{112} - T_{111}}{\delta^2} + \frac{4\cdot\delta_V}{k_A\cdot D}\cdot\left(\left|T_{112} - T_{12}\right|\right)^{\frac{1}{3}}\cdot\left(T_{112} - T_{12}\right) - \frac{4m_{dot}\cdot C_P}{\pi\cdot k_A\cdot D^2\cdot\delta}\left(T_{112} - T_{111}\right) = 0$$

$$\begin{pmatrix} T1 \\ T2 \\ T3 \\ T4 \\ T5 \\ T6 \\ T7 \\ T8 \\ T9 \\ T10 \\ T11 \\ T12 \\ T101 \\ T102 \\ T103 \\ T104 \\ T105 \\ T106 \\ T107 \\ T108 \\ T109 \\ T110 \\ T111 \\ T112 \end{pmatrix} := \mathrm{Find}\left(T_1, T_2, T_3, T_4, T_5, T_6, T_7, T_8, T_9, T_{10}, T_{11}, T_{12}, T_{101}, T_{102}, T_{103}, T_{104}, T_{105}, T_{106}, T_{107}, T_{108}, T_{109}, T\right.$$

Page 12

ARES CORPORATION	CALCULATION SHEET		
Project No. 0509206.01	Calculation No. 0509206.01-M-004	Rev. No. 1	Page No. 61 of 159
Title: DBVS AWTE Thermal Load Inventory			
Prepared By: P.S. Lowery	Date: 2.14.06	Checked By: S.R. Pierce	Date: 2.15.06

DBVS AWTE Feed Chute Thermal Load Calc

Temperatures for the steel chute are ...

T1 = 756.986 K	T1C := KtoC(T1)	T1C = 483.836
T2 = 533.583 K	T2C := KtoC(T2)	T2C = 260.431
T3 = 466.827 K	T3C := KtoC(T3)	T3C = 193.677
T4 = 452.432 K	T4C := KtoC(T4)	T4C = 179.282
T5 = 447.071 K	T5C := KtoC(T5)	T5C = 173.921
T6 = 444.337 K	T6C := KtoC(T6)	T6C = 171.187
T7 = 443.422 K	T7C := KtoC(T7)	T7C = 170.272
T8 = 442.724 K	T8C := KtoC(T8)	T8C = 169.574
T9 = 442.066 K	T9C := KtoC(T9)	T9C = 168.916
T10 = 441.432 K	T10C := KtoC(T10)	T10C = 168.282
T11 = 440.909 K	T11C := KtoC(T11)	T11C = 167.759
T12 = 441.413 K	T12C := KtoC(T12)	T12C = 168.263

Temperature for the air column inside the chute are ...

T101 = 741.527 K	T101C := KtoC(T101)	T101C = 468.377
T102 = 740.134 K	T102C := KtoC(T102)	T102C = 466.984
T103 = 738.131 K	T103C := KtoC(T103)	T103C = 464.981
T104 = 736.006 K	T104C := KtoC(T104)	T104C = 462.856
T105 = 733.849 K	T105C := KtoC(T105)	T105C = 460.699
T106 = 731.686 K	T106C := KtoC(T106)	T106C = 458.536
T107 = 729.535 K	T107C := KtoC(T107)	T107C = 456.385
T108 = 727.399 K	T108C := KtoC(T108)	T108C = 454.249
T109 = 725.278 K	T109C := KtoC(T109)	T109C = 452.128
T110 = 723.171 K	T110C := KtoC(T110)	T110C = 450.021
T111 = 721.08 K	T111C := KtoC(T111)	T111C = 447.93
T112 = 723.187 K	T112C := KtoC(T112)	T112C = 450.037

Page 13

ARES CORPORATION	CALCULATION SHEET		
Project No. 0509206.01	Calculation No. 0509206.01-M-004	Rev. No. 1	Page No. 62 of 159
Title: DBVS AWTE Thermal Load Inventory			
Prepared By: P.S. Lowery	Date: 2.14.06	Checked By: S.R. Pierce	Date: 2.15.06

DBVS AWTE Feed Chute Thermal Load Calc

$$T_{plot} := \begin{pmatrix} T1C \\ T2C \\ T3C \\ T4C \\ T5C \\ T6C \\ T7C \\ T8C \\ T9C \\ T10C \\ T11C \\ T12C \end{pmatrix} \qquad zplot := \begin{pmatrix} 0.5 \\ 1.5 \\ 2.5 \\ 3.5 \\ 4.5 \\ 5.5 \\ 6.5 \\ 7.5 \\ 8.5 \\ 9.5 \\ 10.5 \\ 11.5 \end{pmatrix}$$

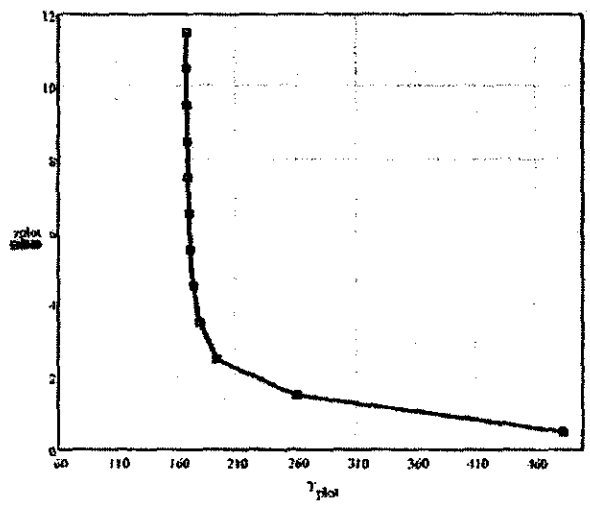

Page 14

Calculation Sheet: QAP 3.1, Rev. 6 (11-15-05)

ARES CORPORATION	CALCULATION SHEET		
Project No. 0509206.01	Calculation No. 0509206.01-M-004	Rev. No. 1	Page No. 63 of 159
Title: DBVS AWTE Thermal Load Inventory			
Prepared By: P.S. Lowery	Date: 2.14.06	Checked By: S.R. Pierce	Date: 2.15.06

DBVS AWTE Feed Chute Thermal Load Calc

Now compute the heat loss from the chute to the AWTE room ...

$$Q := \begin{bmatrix} \pi \cdot D \cdot \delta \cdot \left[\xi_V \cdot \left(\left|T1 - T_{room}\right|\right)^{\frac{1}{3}} \cdot \left(T1 - T_{room}\right) + \sigma \cdot \varepsilon_{sH} \cdot \left(T1^4 - T_{room}^4\right)\right] \\ \pi \cdot D \cdot \delta \cdot \left[\xi_V \cdot \left(\left|T2 - T_{room}\right|\right)^{\frac{1}{3}} \cdot \left(T2 - T_{room}\right) + \sigma \cdot \varepsilon_{sH} \cdot \left(T2^4 - T_{room}^4\right)\right] \\ \pi \cdot D \cdot \delta \cdot \left[\xi_V \cdot \left(\left|T3 - T_{room}\right|\right)^{\frac{1}{3}} \cdot \left(T3 - T_{room}\right) + \sigma \cdot \varepsilon_{sH} \cdot \left(T3^4 - T_{room}^4\right)\right] \\ \pi \cdot D \cdot \delta \cdot \left[\xi_V \cdot \left(\left|T4 - T_{room}\right|\right)^{\frac{1}{3}} \cdot \left(T4 - T_{room}\right) + \sigma \cdot \varepsilon_{sH} \cdot \left(T4^4 - T_{room}^4\right)\right] \\ \pi \cdot D \cdot \delta \cdot \left[\xi_V \cdot \left(\left|T5 - T_{room}\right|\right)^{\frac{1}{3}} \cdot \left(T5 - T_{room}\right) + \sigma \cdot \varepsilon_{sH} \cdot \left(T5^4 - T_{room}^4\right)\right] \\ \pi \cdot D \cdot \delta \cdot \left[\xi_V \cdot \left(\left|T6 - T_{room}\right|\right)^{\frac{1}{3}} \cdot \left(T6 - T_{room}\right) + \sigma \cdot \varepsilon_{sH} \cdot \left(T6^4 - T_{room}^4\right)\right] \\ \pi \cdot D \cdot \delta \cdot \left[\xi_V \cdot \left(\left|T7 - T_{room}\right|\right)^{\frac{1}{3}} \cdot \left(T7 - T_{room}\right) + \sigma \cdot \varepsilon_{sH} \cdot \left(T7^4 - T_{room}^4\right)\right] \\ \pi \cdot D \cdot \delta \cdot \left[\xi_V \cdot \left(\left|T8 - T_{room}\right|\right)^{\frac{1}{3}} \cdot \left(T8 - T_{room}\right) + \sigma \cdot \varepsilon_{sH} \cdot \left(T8^4 - T_{room}^4\right)\right] \\ \pi \cdot D \cdot \delta \cdot \left[\xi_V \cdot \left(\left|T9 - T_{room}\right|\right)^{\frac{1}{3}} \cdot \left(T9 - T_{room}\right) + \sigma \cdot \varepsilon_{sH} \cdot \left(T9^4 - T_{room}^4\right)\right] \\ \pi \cdot D \cdot \delta \cdot \left[\xi_V \cdot \left(\left|T10 - T_{room}\right|\right)^{\frac{1}{3}} \cdot \left(T10 - T_{room}\right) + \sigma \cdot \varepsilon_{sH} \cdot \left(T10^4 - T_{room}^4\right)\right] \\ \pi \cdot D \cdot \delta \cdot \left[\xi_V \cdot \left(\left|T11 - T_{room}\right|\right)^{\frac{1}{3}} \cdot \left(T11 - T_{room}\right) + \sigma \cdot \varepsilon_{sH} \cdot \left(T11^4 - T_{room}^4\right)\right] \\ \pi \cdot D \cdot \delta \cdot \left[\xi_V \cdot \left(\left|T12 - T_{room}\right|\right)^{\frac{1}{3}} \cdot \left(T12 - T_{room}\right) + \sigma \cdot \varepsilon_{sH} \cdot \left(T12^4 - T_{room}^4\right)\right] \end{bmatrix}$$

CALCULATION SHEET

Project No. 0509206.01	Calculation No. 0509206.01-M-004	Rev. No. 1	Page No. 64 of 159
Title: DBVS AWTE Thermal Load Inventory			
Prepared By: P.S. Lowery	Date: 2.14.06	Checked By: S.R. Pierce	Date: 2.15.06

DBVS AWTE Feed Chute Thermal Load Calc

	n	Q
	1	$3.914 \cdot 10^3$
	2	$1.059 \cdot 10^3$
	3	610.632
	4	551.345
	5	503.262
Q =	6	489.236 W
	7	484.561
	8	481.052
	9	477.732
	10	474.548
	11	471.925
	12	474.448

Compute the total heat load to the AWTE room ...

$$Q_{sum} := \sum_{n=1}^{12} Q_n \qquad Q_{sum} = 9.972\,kW$$

Page 16

ARES CORPORATION	CALCULATION SHEET		
Project No. 0509206.01	Calculation No. 0509206.01-M-004	Rev. No. 1	Page No. 65 of 159
Title: DBVS AWTE Thermal Load Inventory			
Prepared By: P.S. Lowery	Date: 2.14.06	Checked By: S.R. Pierce	Date: 2.15.06

NO CHIMNEY FLOW CASE

ARES CORPORATION	CALCULATION SHEET		
Project No. 0509206.01	Calculation No. 0509206.01-M-004	Rev. No. 1	Page No. 66 of 159
Title: DBVS AWTE Thermal Load Inventory			
Prepared By: P.S. Lowery	Date: 2.14.06	Checked By: S.R. Pierce	Date: 2.15.06

DBVS AWTE Feed Chute Thermal Load Calc

°C ≡ 1 °F ≡ 1

$KtoC(x) := \left(\frac{x}{K} - 273.15\right)$ $FtoC(x) := \frac{5}{9}\left(\frac{x}{°F} - 32\right)$

ORIGIN ≡ 1

Model Parameters:

$\sigma := 5.67 \cdot 10^{-8} \frac{W}{m^2 \cdot K^4}$

$k_{ss} := 60.5 \frac{W}{m \cdot K}$

$D := 8in$ $t := 0.148in$ $L_M := 12ft$ $S_K := 12in$

$\varepsilon_{ss} := 0.85$

$\varepsilon_M := 0.7$ $A_M := \frac{(22ft) \cdot (5.5ft)}{\pi \cdot D \cdot 6}$ $A_M = 57.573$ $T_M := (1050 + 273.15)K$ Melt Top Surface Temperature

Natural Convection Heat Transfer Coefficient Correlation Parameters

Natural convection heat transfer coefficients are modeled using correlations from Holman, Heat Transfer, 3rd Edition, p. 219. They are of the form ...

$h = \varepsilon_o (\Delta T)^{1/3}$

where the correlation parameter, ε_o, reflects the shape and orientation of the surface (the subscript "o" indicates the orientation – e.g., V -> vertical, HU -> horizontal, heated surface facing up, and so on).

$\varepsilon_V := 1.32 \frac{W}{m^2 \cdot \sqrt[3]{K^4}}$ $\varepsilon_{HU} := 1.52 \frac{W}{m^2 \cdot \sqrt[3]{K^4}}$

$T_0 := (FtoC(875°F) + 273.15)K$ Temperature at the base of the portion of the chute "exposed" to the off-gas plenum region

$T_{wall} := (570 + 273.15)K$ Temperature used to represent the O/G wall temperatures for the purposes of radiant heat transfer from the electrode surface

$T_{OG} := (FtoC(875°F) + 273.15)K$ Temperature of the off-gas plenum gases

$T_A := (570 + 273.15)K$ Temperature of the air space between the O/G hood and the AWTE floor

$T_{room} := (FtoC(77°F) + 273.15)K$ Temperature of the AWTE room and the associated internal equipment & structures

Nodes 1 thru 12 represent the steel chute
Node 101 thru 112 represent the air column within the steel chute

Load matrix of view factors, F

$F_{1M} := 0.151$ $F_{2M} := 0.011$ $F_{3M} := 0.002$ $F_{4M} := 0.001$ $F_{5M} := 0.000$ View factors from the cylindrical segments to the melt surface

Page 1

CALCULATION SHEET

Project No. 0509206.01	Calculation No. 0509206.01-M-004	Rev. No. 1	Page No. 67 of 159
Title: DBVS AWTE Thermal Load Inventory			
Prepared By: P.S. Lowery	Date: 2.14.06	Checked By: S.R. Pierce	Date: 2.15.06

DBVS AWTE Feed Chute Thermal Load Calc

Model the fluid as air

Properties at 875°F are ... $\rho_A := 0.503 \frac{kg}{m^3}$ $k_A := 0.040 \frac{W}{m \cdot K}$ $C_p := 1080 \frac{J}{kg \cdot K}$

No chimney effect in this model so ...,

$m_{dot} := 0 \frac{kg}{sec}$

Page 2

CALCULATION SHEET

Project No. 0509206.01	Calculation No. 0509206.01-M-004	Rev. No. 1	Page No. 68 of 159
Title: DBVS AWTE Thermal Load Inventory			
Prepared By: P.S. Lowery	Date: 2.14.06	Checked By: S.R. Pierce	Date: 2.15.06

DBVS AWTE Feed Chute Thermal Load Calc

$$F_{ik} := \begin{pmatrix} 0.697 & 0.140 & 0.009 & 0.002 & 0 & 0 & 0 & 0 & 0 & 0 & 0 & 0 \\ 0.140 & 0.697 & 0.140 & 0.009 & 0.002 & 0 & 0 & 0 & 0 & 0 & 0 & 0 \\ 0.009 & 0.140 & 0.697 & 0.140 & 0.009 & 0.002 & 0 & 0 & 0 & 0 & 0 & 0 \\ 0.002 & 0.009 & 0.140 & 0.697 & 0.140 & 0.009 & 0.002 & 0 & 0 & 0 & 0 & 0 \\ 0 & 0.002 & 0.009 & 0.140 & 0.697 & 0.140 & 0.009 & 0.002 & 0 & 0 & 0 & 0 \\ 0 & 0 & 0.002 & 0.009 & 0.140 & 0.697 & 0.140 & 0.009 & 0.002 & 0 & 0 & 0 \\ 0 & 0 & 0 & 0.002 & 0.009 & 0.140 & 0.697 & 0.140 & 0.009 & 0.002 & 0 & 0 \\ 0 & 0 & 0 & 0 & 0.002 & 0.009 & 0.140 & 0.697 & 0.140 & 0.009 & 0.002 & 0 \\ 0 & 0 & 0 & 0 & 0 & 0.002 & 0.009 & 0.140 & 0.697 & 0.140 & 0.009 & 0.002 \\ 0 & 0 & 0 & 0 & 0 & 0 & 0.002 & 0.009 & 0.140 & 0.697 & 0.140 & 0.009 \\ 0 & 0 & 0 & 0 & 0 & 0 & 0 & 0.002 & 0.009 & 0.140 & 0.697 & 0.140 \\ 0 & 0 & 0 & 0 & 0 & 0 & 0 & 0 & 0.002 & 0.009 & 0.140 & 0.697 \end{pmatrix}$$

iew factors from a
ylindrical segment to its
eighboring cylindrical
egments. For example,
$_{1,2}$ is the view factor from
gement 1 in the model to
egment 3.
$_{1,3}=F_{3,1}=0.009$

F =

	1	2	3	4	5	6	7	8	9	10	11	12
1	0.697	0.14	0.009	0.002	0	0	0	0	0	0	0	0
2	0.14	0.697	0.14	0.009	0.002	0	0	0	0	0	0	0
3	0.009	0.14	0.697	0.14	0.009	0.002	0	0	0	0	0	0
4	0.002	0.009	0.14	0.697	0.14	0.009	0.002	0	0	0	0	0
5	0	0.002	0.009	0.14	0.697	0.14	0.009	0.002	0	0	0	0
6	0	0	0.002	0.009	0.14	0.697	0.14	0.009	0.002	0	0	0
7	0	0	0	0.002	0.009	0.14	0.697	0.14	0.009	0.002	0	0
8	0	0	0	0	0.002	0.009	0.14	0.697	0.14	0.009	0.002	0
9	0	0	0	0	0	0.002	0.009	0.14	0.697	0.14	0.009	0.002
10	0	0	0	0	0	0	0.002	0.009	0.14	0.697	0.14	0.009
11	0	0	0	0	0	0	0	0.002	0.009	0.14	0.697	0.14
12	0	0	0	0	0	0	0	0	0.002	0.009	0.14	0.697

Initial guess for temperature d istribution ..

$T_1 := (600 + 273.15)K$ $T_{101} := (600 + 273.15)K$

$T_2 := (600 + 273.15)K$ $T_{102} := (600 + 273.15)K$

$T_3 := (600 + 273.15)K$ $T_{103} := (600 + 273.15)K$

$T_4 := (600 + 273.15)K$ $T_{104} := (600 + 273.15)K$

$T_5 := (600 + 273.15)K$ $T_{105} := (600 + 273.15)K$

$T_6 := (600 + 273.15)K$ $T_{106} := (600 + 273.15)K$

$T_7 := (600 + 273.15)K$ $T_{107} := (600 + 273.15)K$

$T_8 := (600 + 273.15)K$ $T_{108} := (600 + 273.15)K$

$T_9 := (600 + 273.15)K$ $T_{109} := (600 + 273.15)K$

$T_{10} := (600 + 273.15)K$ $T_{110} := (600 + 273.15)K$

$T_{11} := (600 + 273.15)K$ $T_{111} := (600 + 273.15)K$

$T_{12} := (600 + 273.15)K$ $T_{112} := (600 + 273.15)K$

Page 3

Calculation Sheet: QAP 3.1, Rev. 6 (11-15-05)

CALCULATION SHEET

Project No. 0509206.01	Calculation No. 0509206.01-M-004	Rev. No. 1	Page No. 69 of 159
Title: DBVS AWTE Thermal Load Inventory			
Prepared By: P.S. Lowery	Date: 2.14.06	Checked By: S.R. Pierce	Date: 2.15.06

DBVS AWTE Feed Chute Thermal Load Calc

Set-up a vector of heat sink values for direct cooling of each of the 12 segments used to model the chute. This energy will be removed directly from its associated chute segment in the model. For example, An entry of x in vector element $q_{cool}[5]$ will remove x Watts of from that segment.

$$q_{cool} := \begin{pmatrix} 0W \\ 0W \\ 0W \\ 0W \\ 0W \\ 0W \\ 0W \\ 0W \\ 0W \\ 0W \\ 0W \\ 0W \end{pmatrix}$$

Page 4

ARES CORPORATION	CALCULATION SHEET		
Project No. 0509206.01	Calculation No. 0509206.01-M-004	Rev. No. 1	Page No. 70 of 159
Title: DBVS AWTE Thermal Load Inventory			
Prepared By: P.S. Lowery	Date: 2.14.06	Checked By: S.R. Pierce	Date: 2.15.06

DBVS AWTE Feed Chute Thermal Load Calc

Given

First define the energy balance equations for the steel chute elements ...

$$\frac{T_2 - 2\cdot T_1 + T_0}{s^2} - \frac{\xi_V}{k_{stl}\cdot t}\left[\left(\left|T_1 - T_{101}\right|\right)^{\frac{1}{3}}\cdot\left(T_1 - T_{101}\right) + \left(\left|T_1 - T_{room}\right|\right)^{\frac{1}{3}}\cdot\left(T_1 - T_{room}\right)\right] \ldots = 0$$

$$+0 - \frac{\sigma\cdot\varepsilon_{stl}}{k_{stl}\cdot t}\left(T_1^{\,4} - T_{room}^{\,4}\right) - \frac{\sigma}{k_{stl}\cdot t}\cdot\frac{T_1^{\,4} - T_M^{\,4}}{\left(\frac{1-\varepsilon_{stl}}{\varepsilon_{stl}}\right) + \frac{1}{F_{1M}} + \left(\frac{1-\varepsilon_M}{\varepsilon_M\cdot A_M}\right)} \ldots$$

$$+0 - \frac{\sigma}{k_{stl}\cdot t}\cdot\frac{T_1^{\,4} - T_2^{\,4}}{\left(\frac{1-\varepsilon_{stl}}{\varepsilon_{stl}}\right) + \frac{1}{F_{1,2}} + \left(\frac{1-\varepsilon_{stl}}{\varepsilon_{stl}}\right)} - \frac{\sigma}{k_{stl}\cdot t}\cdot\frac{T_1^{\,4} - T_3^{\,4}}{\left(\frac{1-\varepsilon_{stl}}{\varepsilon_{stl}}\right) + \frac{1}{F_{1,3}} + \left(\frac{1-\varepsilon_{stl}}{\varepsilon_{stl}}\right)} \ldots$$

$$+0 - \frac{\sigma}{k_{stl}\cdot t}\cdot\frac{T_1^{\,4} - T_4^{\,4}}{\left(\frac{1-\varepsilon_{stl}}{\varepsilon_{stl}}\right) + \frac{1}{F_{1,4}} + \left(\frac{1-\varepsilon_{stl}}{\varepsilon_{stl}}\right)} - \frac{q_{cool_1}}{\pi\cdot k_{stl}\cdot D\cdot t\cdot\delta}$$

$$\frac{T_3 - 2\cdot T_2 + T_1}{s^2} - \frac{\xi_V}{k_{stl}\cdot t}\left[\left(\left|T_2 - T_{102}\right|\right)^{\frac{1}{3}}\cdot\left(T_2 - T_{102}\right) + \left(\left|T_2 - T_{room}\right|\right)^{\frac{1}{3}}\cdot\left(T_2 - T_{room}\right)\right] \ldots = 0$$

$$+0 - \frac{\sigma\cdot\varepsilon_{stl}}{k_{stl}\cdot t}\left(T_2^{\,4} - T_{room}^{\,4}\right) - \frac{\sigma}{k_{stl}\cdot t}\cdot\frac{T_2^{\,4} - T_M^{\,4}}{\left(\frac{1-\varepsilon_{stl}}{\varepsilon_{stl}}\right) + \frac{1}{F_{2M}} + \left(\frac{1-\varepsilon_M}{\varepsilon_M\cdot A_M}\right)} \ldots$$

$$+0 - \frac{\sigma}{k_{stl}\cdot t}\cdot\frac{T_2^{\,4} - T_1^{\,4}}{\left(\frac{1-\varepsilon_{stl}}{\varepsilon_{stl}}\right) + \frac{1}{F_{2,1}} + \left(\frac{1-\varepsilon_{stl}}{\varepsilon_{stl}}\right)} - \frac{\sigma}{k_{stl}\cdot t}\cdot\frac{T_2^{\,4} - T_3^{\,4}}{\left(\frac{1-\varepsilon_{stl}}{\varepsilon_{stl}}\right) + \frac{1}{F_{2,3}} + \left(\frac{1-\varepsilon_{stl}}{\varepsilon_{stl}}\right)} \ldots$$

$$+0 - \frac{\sigma}{k_{stl}\cdot t}\cdot\frac{T_2^{\,4} - T_4^{\,4}}{\left(\frac{1-\varepsilon_{stl}}{\varepsilon_{stl}}\right) + \frac{1}{F_{2,4}} + \left(\frac{1-\varepsilon_{stl}}{\varepsilon_{stl}}\right)} - \frac{\sigma}{k_{stl}\cdot t}\cdot\frac{T_2^{\,4} - T_5^{\,4}}{\left(\frac{1-\varepsilon_{stl}}{\varepsilon_{stl}}\right) + \frac{1}{F_{2,5}} + \left(\frac{1-\varepsilon_{stl}}{\varepsilon_{stl}}\right)} - \frac{q_{cool_2}}{\pi\cdot k_{stl}\cdot D\cdot t\cdot\delta}$$

Page 5

ARES CORPORATION	CALCULATION SHEET		
Project No. 0509206.01	Calculation No. 0509206.01-M-004	Rev. No. 1	Page No. 71 of 159
Title: DBVS AWTE Thermal Load Inventory			
Prepared By: P.S. Lowery	Date: 2.14.06	Checked By: S.R. Pierce	Date: 2.15.06

DBVS AWTE Feed Chute Thermal Load Calc

$$\frac{T_4 - 2\cdot T_3 + T_2}{\delta^2} - \frac{\xi_V}{k_{stl}\cdot t}\left[\left(\left|T_3 - T_{105}\right|\right)^{\frac{1}{3}}\cdot\left(T_3 - T_{105}\right) + \left(\left|T_3 - T_{room}\right|\right)^{\frac{1}{3}}\cdot\left(T_3 - T_{room}\right)\right] \ldots = 0$$

$$+0 - \frac{\sigma\cdot\varepsilon_{stl}}{k_{stl}\cdot t}\left(T_3^{\,4} - T_{room}^{\,4}\right) - \frac{\sigma}{k_{stl}\cdot t}\cdot\frac{T_3^{\,4} - T_M^{\,4}}{\left(\frac{1-\varepsilon_{stl}}{\varepsilon_{stl}}\right) + \frac{1}{F_{3M}} + \left(\frac{1-\varepsilon_M}{\varepsilon_M\cdot A_M}\right)} \ldots$$

$$+0 - \frac{\sigma}{k_{stl}\cdot t}\cdot\frac{T_3^{\,4} - T_1^{\,4}}{\left(\frac{1-\varepsilon_{stl}}{\varepsilon_{stl}}\right) + \frac{1}{F_{3,1}} + \left(\frac{1-\varepsilon_{stl}}{\varepsilon_{stl}}\right)} - \frac{\sigma}{k_{stl}\cdot t}\cdot\frac{T_3^{\,4} - T_2^{\,4}}{\left(\frac{1-\varepsilon_{stl}}{\varepsilon_{stl}}\right) + \frac{1}{F_{3,2}} + \left(\frac{1-\varepsilon_{stl}}{\varepsilon_{stl}}\right)} \ldots$$

$$+0 - \frac{\sigma}{k_{stl}\cdot t}\cdot\frac{T_3^{\,4} - T_4^{\,4}}{\left(\frac{1-\varepsilon_{stl}}{\varepsilon_{stl}}\right) + \frac{1}{F_{3,4}} + \left(\frac{1-\varepsilon_{stl}}{\varepsilon_{stl}}\right)} - \frac{\sigma}{k_{stl}\cdot t}\cdot\frac{T_3^{\,4} - T_5^{\,4}}{\left(\frac{1-\varepsilon_{stl}}{\varepsilon_{stl}}\right) + \frac{1}{F_{3,5}} + \left(\frac{1-\varepsilon_{stl}}{\varepsilon_{stl}}\right)} \ldots$$

$$+0 - \frac{\sigma}{k_{stl}\cdot t}\cdot\frac{T_3^{\,4} - T_6^{\,4}}{\left(\frac{1-\varepsilon_{stl}}{\varepsilon_{stl}}\right) + \frac{1}{F_{3,6}} + \left(\frac{1-\varepsilon_{stl}}{\varepsilon_{stl}}\right)} - \frac{q_{cool_3}}{\pi k_{stl}\cdot D\cdot t\cdot\delta}$$

$$\frac{T_3 - 2\cdot T_4 + T_3}{\delta^2} - \frac{\xi_V}{k_{stl}\cdot t}\left[\left(\left|T_4 - T_{104}\right|\right)^{\frac{1}{3}}\cdot\left(T_4 - T_{104}\right) + \left(\left|T_4 - T_{room}\right|\right)^{\frac{1}{3}}\cdot\left(T_4 - T_{room}\right)\right] \ldots = 0$$

$$+0 - \frac{\sigma\cdot\varepsilon_{stl}}{k_{stl}\cdot t}\left(T_4^{\,4} - T_{room}^{\,4}\right) - \frac{\sigma}{k_{stl}\cdot t}\cdot\frac{T_4^{\,4} - T_M^{\,4}}{\left(\frac{1-\varepsilon_{stl}}{\varepsilon_{stl}}\right) + \frac{1}{F_{4M}} + \left(\frac{1-\varepsilon_M}{\varepsilon_M\cdot A_M}\right)} \ldots$$

$$+0 - \frac{\sigma}{k_{stl}\cdot t}\cdot\frac{T_4^{\,4} - T_1^{\,4}}{\left(\frac{1-\varepsilon_{stl}}{\varepsilon_{stl}}\right) + \frac{1}{F_{4,1}} + \left(\frac{1-\varepsilon_{stl}}{\varepsilon_{stl}}\right)} - \frac{\sigma}{k_{stl}\cdot t}\cdot\frac{T_4^{\,4} - T_2^{\,4}}{\left(\frac{1-\varepsilon_{stl}}{\varepsilon_{stl}}\right) + \frac{1}{F_{4,2}} + \left(\frac{1-\varepsilon_{stl}}{\varepsilon_{stl}}\right)} \ldots$$

$$+0 - \frac{\sigma}{k_{stl}\cdot t}\cdot\frac{T_4^{\,4} - T_3^{\,4}}{\left(\frac{1-\varepsilon_{stl}}{\varepsilon_{stl}}\right) + \frac{1}{F_{4,3}} + \left(\frac{1-\varepsilon_{stl}}{\varepsilon_{stl}}\right)} - \frac{\sigma}{k_{stl}\cdot t}\cdot\frac{T_4^{\,4} - T_5^{\,4}}{\left(\frac{1-\varepsilon_{stl}}{\varepsilon_{stl}}\right) + \frac{1}{F_{4,5}} + \left(\frac{1-\varepsilon_{stl}}{\varepsilon_{stl}}\right)} \ldots$$

$$+0 - \frac{\sigma}{k_{stl}\cdot t}\cdot\frac{T_4^{\,4} - T_6^{\,4}}{\left(\frac{1-\varepsilon_{stl}}{\varepsilon_{stl}}\right) + \frac{1}{F_{4,6}} + \left(\frac{1-\varepsilon_{stl}}{\varepsilon_{stl}}\right)} - \frac{\sigma}{k_{stl}\cdot t}\cdot\frac{T_4^{\,4} - T_7^{\,4}}{\left(\frac{1-\varepsilon_{stl}}{\varepsilon_{stl}}\right) + \frac{1}{F_{4,7}} + \left(\frac{1-\varepsilon_{stl}}{\varepsilon_{stl}}\right)} - \frac{q_{cool_4}}{\pi k_{stl}\cdot D\cdot t\cdot\delta}$$

Page 6

ARES CORPORATION	CALCULATION SHEET		
Project No. 0509206.01	Calculation No. 0509206.01-M-004	Rev. No. 1	Page No. 72 of 159
Title: DBVS AWTE Thermal Load Inventory			
Prepared By: P.S. Lowery	Date: 2.14.06	Checked By: S.R. Pierce	Date: 2.15.06

DBVS AWTE Feed Chute Thermal Load Calc

$$\frac{T_6 - 2\cdot T_5 + T_4}{\delta^2} - \frac{\xi_V}{k_{stl}\cdot t}\left[\left(\left|T_5 - T_{105}\right|\right)^{\frac{1}{3}}\cdot\left(T_5 - T_{105}\right) + \left(\left|T_5 - T_{room}\right|\right)^{\frac{1}{3}}\cdot\left(T_5 - T_{room}\right)\right] \ldots = 0$$

$$+0 - \frac{\sigma\cdot\varepsilon_{stl}}{k_{stl}\cdot t}\left(T_5^{\,4} - T_{room}^{\,4}\right) - \frac{\sigma}{k_{stl}\cdot t}\cdot\frac{T_5^{\,4} - T_M^{\,4}}{\left(\frac{1-\varepsilon_{stl}}{\varepsilon_{stl}}\right) + \frac{1}{F_{5M}} + \left(\frac{1-\varepsilon_M}{\varepsilon_M\cdot A_M}\right)} \ldots$$

$$+0 - \frac{\sigma}{k_{stl}\cdot t}\cdot\frac{T_5^{\,4} - T_2^{\,4}}{\left(\frac{1-\varepsilon_{stl}}{\varepsilon_{stl}}\right) + \frac{1}{F_{5,2}} + \left(\frac{1-\varepsilon_{stl}}{\varepsilon_{stl}}\right)} \ldots$$

$$+0 - \frac{\sigma}{k_{stl}\cdot t}\cdot\frac{T_5^{\,4} - T_3^{\,4}}{\left(\frac{1-\varepsilon_{stl}}{\varepsilon_{stl}}\right) + \frac{1}{F_{5,3}} + \left(\frac{1-\varepsilon_{stl}}{\varepsilon_{stl}}\right)} - \frac{\sigma}{k_{stl}\cdot t}\cdot\frac{T_5^{\,4} - T_4^{\,4}}{\left(\frac{1-\varepsilon_{stl}}{\varepsilon_{stl}}\right) + \frac{1}{F_{5,4}} + \left(\frac{1-\varepsilon_{stl}}{\varepsilon_{stl}}\right)} \ldots$$

$$+0 - \frac{\sigma}{k_{stl}\cdot t}\cdot\frac{T_5^{\,4} - T_6^{\,4}}{\left(\frac{1-\varepsilon_{stl}}{\varepsilon_{stl}}\right) + \frac{1}{F_{5,6}} + \left(\frac{1-\varepsilon_{stl}}{\varepsilon_{stl}}\right)} - \frac{\sigma}{k_{stl}\cdot t}\cdot\frac{T_5^{\,4} - T_7^{\,4}}{\left(\frac{1-\varepsilon_{stl}}{\varepsilon_{stl}}\right) + \frac{1}{F_{5,7}} + \left(\frac{1-\varepsilon_{stl}}{\varepsilon_{stl}}\right)} \ldots$$

$$+0 - \frac{\sigma}{k_{stl}\cdot t}\cdot\frac{T_5^{\,4} - T_8^{\,4}}{\left(\frac{1-\varepsilon_{stl}}{\varepsilon_{stl}}\right) + \frac{1}{F_{5,8}} + \left(\frac{1-\varepsilon_{stl}}{\varepsilon_{stl}}\right)} - \frac{q_{cool_5}}{\pi k_{stl}\cdot D\cdot t\cdot\delta}$$

$$\frac{T_7 - 2\cdot T_6 + T_5}{\delta^2} - \frac{\xi_V}{k_{stl}\cdot t}\left[\left(\left|T_6 - T_{105}\right|\right)^{\frac{1}{3}}\cdot\left(T_6 - T_{106}\right) + \left(\left|T_6 - T_{room}\right|\right)^{\frac{1}{3}}\cdot\left(T_6 - T_{room}\right)\right] \ldots = 0$$

$$+0 - \frac{\sigma\cdot\varepsilon_{stl}}{k_{stl}\cdot t}\left(T_6^{\,4} - T_{room}^{\,4}\right) - \frac{\sigma}{k_{stl}\cdot t}\cdot\frac{T_6^{\,4} - T_3^{\,4}}{\left(\frac{1-\varepsilon_{stl}}{\varepsilon_{stl}}\right) + \frac{1}{F_{6,3}} + \left(\frac{1-\varepsilon_{stl}}{\varepsilon_{stl}}\right)} \ldots$$

$$+0 - \frac{\sigma}{k_{stl}\cdot t}\cdot\frac{T_6^{\,4} - T_4^{\,4}}{\left(\frac{1-\varepsilon_{stl}}{\varepsilon_{stl}}\right) + \frac{1}{F_{6,4}} + \left(\frac{1-\varepsilon_{stl}}{\varepsilon_{stl}}\right)} - \frac{\sigma}{k_{stl}\cdot t}\cdot\frac{T_6^{\,4} - T_5^{\,4}}{\left(\frac{1-\varepsilon_{stl}}{\varepsilon_{stl}}\right) + \frac{1}{F_{6,5}} + \left(\frac{1-\varepsilon_{stl}}{\varepsilon_{stl}}\right)} \ldots$$

$$+0 - \frac{\sigma}{k_{stl}\cdot t}\cdot\frac{T_6^{\,4} - T_7^{\,4}}{\left(\frac{1-\varepsilon_{stl}}{\varepsilon_{stl}}\right) + \frac{1}{F_{6,7}} + \left(\frac{1-\varepsilon_{stl}}{\varepsilon_{stl}}\right)} - \frac{\sigma}{k_{stl}\cdot t}\cdot\frac{T_6^{\,4} - T_8^{\,4}}{\left(\frac{1-\varepsilon_{stl}}{\varepsilon_{stl}}\right) + \frac{1}{F_{6,8}} + \left(\frac{1-\varepsilon_{stl}}{\varepsilon_{stl}}\right)} \ldots$$

$$+0 - \frac{\sigma}{k_{stl}\cdot t}\cdot\frac{T_6^{\,4} - T_9^{\,4}}{\left(\frac{1-\varepsilon_{stl}}{\varepsilon_{stl}}\right) + \frac{1}{F_{6,9}} + \left(\frac{1-\varepsilon_{stl}}{\varepsilon_{stl}}\right)} - \frac{q_{cool_6}}{\pi k_{stl}\cdot D\cdot t\cdot\delta}$$

Page 7

CALCULATION SHEET

Project No. 0509206.01	Calculation No. 0509206.01-M-004	Rev. No. 1	Page No. 73 of 159
Title: DBVS AWTE Thermal Load Inventory			
Prepared By: P.S. Lowery	Date: 2.14.06	Checked By: S.R. Pierce	Date: 2.15.06

DBVS AWTE Feed Chute Thermal Load Calc

$$\frac{T_8 - 2\cdot T_7 + T_6}{s^2} - \frac{\xi_V}{k_{stl}\cdot t}\left[\left(\left|T_7 - T_{107}\right|\right)^{\frac{1}{3}}\cdot\left(T_7 - T_{107}\right) + \left(\left|T_7 - T_{room}\right|\right)^{\frac{1}{3}}\cdot\left(T_7 - T_{room}\right)\right] \ldots = 0$$

$$+ 0 - \frac{\sigma\cdot\varepsilon_{stl}}{k_{stl}\cdot t}\left(T_7^{\,4} - T_{room}^{\,4}\right) - \frac{\sigma}{k_{stl}\cdot t}\cdot\frac{T_7^{\,4} - T_4^{\,4}}{\left(\frac{1-\varepsilon_{stl}}{\varepsilon_{stl}}\right) + \frac{1}{F_{7,4}} + \left(\frac{1-\varepsilon_{stl}}{\varepsilon_{stl}}\right)} \ldots$$

$$+ 0 - \frac{\sigma}{k_{stl}\cdot t}\cdot\frac{T_7^{\,4} - T_5^{\,4}}{\left(\frac{1-\varepsilon_{stl}}{\varepsilon_{stl}}\right) + \frac{1}{F_{7,5}} + \left(\frac{1-\varepsilon_{stl}}{\varepsilon_{stl}}\right)} - \frac{\sigma}{k_{stl}\cdot t}\cdot\frac{T_7^{\,4} - T_6^{\,4}}{\left(\frac{1-\varepsilon_{stl}}{\varepsilon_{stl}}\right) + \frac{1}{F_{7,6}} + \left(\frac{1-\varepsilon_{stl}}{\varepsilon_{stl}}\right)} \ldots$$

$$+ 0 - \frac{\sigma}{k_{stl}\cdot t}\cdot\frac{T_7^{\,4} - T_8^{\,4}}{\left(\frac{1-\varepsilon_{stl}}{\varepsilon_{stl}}\right) + \frac{1}{F_{7,8}} + \left(\frac{1-\varepsilon_{stl}}{\varepsilon_{stl}}\right)} - \frac{\sigma}{k_{stl}\cdot t}\cdot\frac{T_7^{\,4} - T_9^{\,4}}{\left(\frac{1-\varepsilon_{stl}}{\varepsilon_{stl}}\right) + \frac{1}{F_{7,9}} + \left(\frac{1-\varepsilon_{stl}}{\varepsilon_{stl}}\right)} \ldots$$

$$+ 0 - \frac{\sigma}{k_{stl}\cdot t}\cdot\frac{T_7^{\,4} - T_{10}^{\,4}}{\left(\frac{1-\varepsilon_{stl}}{\varepsilon_{stl}}\right) + \frac{1}{F_{7,10}} + \left(\frac{1-\varepsilon_{stl}}{\varepsilon_{stl}}\right)} - \frac{q_{cool_7}}{\pi k_{stl}\cdot D\cdot t\cdot\delta}$$

$$\frac{T_9 - 2\cdot T_8 + T_7}{s^2} - \frac{\xi_V}{k_{stl}\cdot t}\left[\left(\left|T_8 - T_{108}\right|\right)^{\frac{1}{3}}\cdot\left(T_8 - T_{108}\right) + \left(\left|T_8 - T_{room}\right|\right)^{\frac{1}{3}}\cdot\left(T_8 - T_{room}\right)\right] \ldots = 0$$

$$+ 0 - \frac{\sigma\cdot\varepsilon_{stl}}{k_{stl}\cdot t}\left(T_8^{\,4} - T_{room}^{\,4}\right) - \frac{\sigma}{k_{stl}\cdot t}\cdot\frac{T_8^{\,4} - T_5^{\,4}}{\left(\frac{1-\varepsilon_{stl}}{\varepsilon_{stl}}\right) + \frac{1}{F_{8,5}} + \left(\frac{1-\varepsilon_{stl}}{\varepsilon_{stl}}\right)} \ldots$$

$$+ 0 - \frac{\sigma}{k_{stl}\cdot t}\cdot\frac{T_8^{\,4} - T_6^{\,4}}{\left(\frac{1-\varepsilon_{stl}}{\varepsilon_{stl}}\right) + \frac{1}{F_{8,6}} + \left(\frac{1-\varepsilon_{stl}}{\varepsilon_{stl}}\right)} - \frac{\sigma}{k_{stl}\cdot t}\cdot\frac{T_8^{\,4} - T_7^{\,4}}{\left(\frac{1-\varepsilon_{stl}}{\varepsilon_{stl}}\right) + \frac{1}{F_{8,7}} + \left(\frac{1-\varepsilon_{stl}}{\varepsilon_{stl}}\right)} \ldots$$

$$+ 0 - \frac{\sigma}{k_{stl}\cdot t}\cdot\frac{T_8^{\,4} - T_9^{\,4}}{\left(\frac{1-\varepsilon_{stl}}{\varepsilon_{stl}}\right) + \frac{1}{F_{8,9}} + \left(\frac{1-\varepsilon_{stl}}{\varepsilon_{stl}}\right)} - \frac{\sigma}{k_{stl}\cdot t}\cdot\frac{T_8^{\,4} - T_{10}^{\,4}}{\left(\frac{1-\varepsilon_{stl}}{\varepsilon_{stl}}\right) + \frac{1}{F_{8,10}} + \left(\frac{1-\varepsilon_{stl}}{\varepsilon_{stl}}\right)} \ldots$$

$$+ 0 - \frac{\sigma}{k_{stl}\cdot t}\cdot\frac{T_8^{\,4} - T_{11}^{\,4}}{\left(\frac{1-\varepsilon_{stl}}{\varepsilon_{stl}}\right) + \frac{1}{F_{8,11}} + \left(\frac{1-\varepsilon_{stl}}{\varepsilon_{stl}}\right)} \quad \frac{q_{cool_8}}{\pi k_{stl}\cdot D\cdot t\cdot\delta}$$

Page 8

Calculation Sheet QAP 3.1, Rev. 6 (11-15-05)

ARES CORPORATION	CALCULATION SHEET		
Project No. 0509206.01	Calculation No. 0509206.01-M-004	Rev. No. 1	Page No. 74 of 159
Title: DBVS AWTE Thermal Load Inventory			
Prepared By: P.S. Lowery	Date: 2.14.06	Checked By: S.R. Pierce	Date: 2.15.06

DBVS AWTE Feed Chute Thermal Load Calc

$$\frac{T_{10} - 2 \cdot T_9 + T_8}{\delta^2} \ldots = 0$$

$$+ 0 - \frac{\xi_V}{k_{stl}^{-1}} \left[\left(\left| T_9 - T_{109} \right| \right)^{\frac{1}{3}} \cdot \left(T_9 - T_{109} \right) + \left(\left| T_9 - T_{room} \right| \right)^{\frac{1}{3}} \cdot \left(T_9 - T_{room} \right) \right] \ldots$$

$$+ 0 - \frac{\sigma \cdot \varepsilon_{stl}}{k_{stl}^{-1}} \cdot \left(T_9^{\,4} - T_{room}^{\,4} \right) - \frac{\sigma}{k_{stl}^{-1}} \cdot \frac{T_9^{\,4} - T_6^{\,4}}{\left(\frac{1 - \varepsilon_{stl}}{\varepsilon_{stl}} \right) + \frac{1}{F_{9,6}} + \left(\frac{1 - \varepsilon_{stl}}{\varepsilon_{stl}} \right)} \ldots$$

$$+ 0 - \frac{\sigma}{k_{stl}^{-1}} \cdot \frac{T_9^{\,4} - T_7^{\,4}}{\left(\frac{1 - \varepsilon_{stl}}{\varepsilon_{stl}} \right) + \frac{1}{F_{9,7}} + \left(\frac{1 - \varepsilon_{stl}}{\varepsilon_{stl}} \right)} - \frac{\sigma}{k_{stl}^{-1}} \cdot \frac{T_9^{\,4} - T_8^{\,4}}{\left(\frac{1 - \varepsilon_{stl}}{\varepsilon_{stl}} \right) + \frac{1}{F_{9,8}} + \left(\frac{1 - \varepsilon_{stl}}{\varepsilon_{stl}} \right)} \ldots$$

$$+ 0 - \frac{\sigma}{k_{stl}^{-1}} \cdot \frac{T_9^{\,4} - T_{10}^{\,4}}{\left(\frac{1 - \varepsilon_{stl}}{\varepsilon_{stl}} \right) + \frac{1}{F_{9,10}} + \left(\frac{1 - \varepsilon_{stl}}{\varepsilon_{stl}} \right)} - \frac{\sigma}{k_{stl}^{-1}} \cdot \frac{T_9^{\,4} - T_{11}^{\,4}}{\left(\frac{1 - \varepsilon_{stl}}{\varepsilon_{stl}} \right) + \frac{1}{F_{9,11}} + \left(\frac{1 - \varepsilon_{stl}}{\varepsilon_{stl}} \right)} \ldots$$

$$- 0 - \frac{\sigma}{k_{stl}^{-1}} \cdot \frac{T_9^{\,4} - T_{12}^{\,4}}{\left(\frac{1 - \varepsilon_{stl}}{\varepsilon_{stl}} \right) + \frac{1}{F_{9,12}} + \left(\frac{1 - \varepsilon_{stl}}{\varepsilon_{stl}} \right)} - \frac{q_{cool_9}}{\pi k_{stl} \cdot D \cdot t \cdot \delta}$$

$$\frac{T_{11} - 2 \cdot T_{10} + T_9}{\delta^2} \ldots = 0$$

$$+ 0 - \frac{\xi_V}{k_{stl}^{-1}} \left[\left(\left| T_{10} - T_{110} \right| \right)^{\frac{1}{3}} \cdot \left(T_{10} - T_{110} \right) + \left(\left| T_{10} - T_{room} \right| \right)^{\frac{1}{3}} \cdot \left(T_{10} - T_{room} \right) \right] \ldots$$

$$+ 0 - \frac{\sigma \cdot \varepsilon_{stl}}{k_{stl}^{-1}} \cdot \left(T_{10}^{\,4} - T_{room}^{\,4} \right) - \frac{\sigma}{k_{stl}^{-1}} \cdot \frac{T_{10}^{\,4} - T_7^{\,4}}{\left(\frac{1 - \varepsilon_{stl}}{\varepsilon_{stl}} \right) + \frac{1}{F_{10,7}} + \left(\frac{1 - \varepsilon_{stl}}{\varepsilon_{stl}} \right)} \ldots$$

$$+ 0 - \frac{\sigma}{k_{stl}^{-1}} \cdot \frac{T_{10}^{\,4} - T_8^{\,4}}{\left(\frac{1 - \varepsilon_{stl}}{\varepsilon_{stl}} \right) + \frac{1}{F_{10,8}} + \left(\frac{1 - \varepsilon_{stl}}{\varepsilon_{stl}} \right)} - \frac{\sigma}{k_{stl}^{-1}} \cdot \frac{T_{10}^{\,4} - T_9^{\,4}}{\left(\frac{1 - \varepsilon_{stl}}{\varepsilon_{stl}} \right) + \frac{1}{F_{10,9}} + \left(\frac{1 - \varepsilon_{stl}}{\varepsilon_{stl}} \right)} \ldots$$

$$+ 0 - \frac{\sigma}{k_{stl}^{-1}} \cdot \frac{T_{10}^{\,4} - T_{11}^{\,4}}{\left(\frac{1 - \varepsilon_{stl}}{\varepsilon_{stl}} \right) + \frac{1}{F_{10,11}} + \left(\frac{1 - \varepsilon_{stl}}{\varepsilon_{stl}} \right)} - \frac{\sigma}{k_{stl}^{-1}} \cdot \frac{T_{10}^{\,4} - T_{12}^{\,4}}{\left(\frac{1 - \varepsilon_{stl}}{\varepsilon_{stl}} \right) + \frac{1}{F_{10,12}} + \left(\frac{1 - \varepsilon_{stl}}{\varepsilon_{stl}} \right)} - \frac{q_{cool_{10}}}{\pi k_{stl} \cdot D \cdot t \cdot \delta}$$

Page 9

Calculation Sheet: QAP 3.1, Rev. 6 (11-15-05)

ARES CORPORATION	CALCULATION SHEET		
Project No. 0509206.01	Calculation No. 0509206.01-M-004	Rev. No. 1	Page No. 75 of 159
Title: DBVS AWTE Thermal Load Inventory			
Prepared By: P.S. Lowery	Date: 2.14.06	Checked By: S.R. Pierce	Date: 2.15.06

DBVS AWTE Feed Chute Thermal Load Calc

$$\frac{T_{12} - 2 \cdot T_{11} + T_{10}}{\delta^2} \ldots = 0$$

$$+ 0 - \frac{\xi_V}{k_{stl} \cdot t} \left[\left(\left| T_{11} - T_{111} \right| \right)^{\frac{1}{3}} \cdot \left(T_{11} - T_{111} \right) + \left(\left| T_{11} - T_{room} \right| \right)^{\frac{1}{3}} \cdot \left(T_{11} - T_{room} \right) \right] \ldots$$

$$+ 0 - \frac{\sigma \cdot \varepsilon_{stl}}{k_{stl} \cdot t} \left(T_{11}^4 - T_{room}^4 \right) - \frac{\sigma}{k_{stl} \cdot t} \cdot \frac{T_{11}^4 - T_8^4}{\left(\frac{1 - \varepsilon_{stl}}{\varepsilon_{stl}} \right) + \frac{1}{F_{11,8}} + \left(\frac{1 - \varepsilon_{stl}}{\varepsilon_{stl}} \right)} \ldots$$

$$+ 0 - \frac{\sigma}{k_{stl} \cdot t} \cdot \frac{T_{11}^4 - T_9^4}{\left(\frac{1 - \varepsilon_{stl}}{\varepsilon_{stl}} \right) + \frac{1}{F_{11,9}} + \left(\frac{1 - \varepsilon_{stl}}{\varepsilon_{stl}} \right)} - \frac{\sigma}{k_{stl} \cdot t} \cdot \frac{T_{11}^4 - T_{10}^4}{\left(\frac{1 - \varepsilon_{stl}}{\varepsilon_{stl}} \right) + \frac{1}{F_{11,10}} + \left(\frac{1 - \varepsilon_{stl}}{\varepsilon_{stl}} \right)} \ldots$$

$$+ 0 - \frac{\sigma}{k_{stl} \cdot t} \cdot \frac{T_{11}^4 - T_{12}^4}{\left(\frac{1 - \varepsilon_{stl}}{\varepsilon_{stl}} \right) + \frac{1}{F_{11,12}} + \left(\frac{1 - \varepsilon_{stl}}{\varepsilon_{stl}} \right)} - \frac{q_{cool_{11}}}{\pi k_{stl} \cdot D \cdot t \cdot \delta}$$

$$\frac{T_{12} - T_{11}}{\delta^2} \ldots = 0$$

$$+ 0 - \frac{\xi_V}{k_{stl} \cdot t} \left[\left(\left| T_{12} - T_{112} \right| \right)^{\frac{1}{3}} \cdot \left(T_{12} - T_{112} \right) + \left(\left| T_{12} - T_{room} \right| \right)^{\frac{1}{3}} \cdot \left(T_{12} - T_{room} \right) \right] -$$

$$+ 0 - \frac{\sigma \cdot \varepsilon_{stl}}{k_{stl} \cdot t} \left(T_{12}^4 - T_{room}^4 \right) - \frac{\sigma}{k_{stl} \cdot t} \cdot \frac{T_{12}^4 - T_9^4}{\left(\frac{1 - \varepsilon_{stl}}{\varepsilon_{stl}} \right) + \frac{1}{F_{12,9}} + \left(\frac{1 - \varepsilon_{stl}}{\varepsilon_{stl}} \right)} \ldots$$

$$+ 0 - \frac{\sigma}{k_{stl} \cdot t} \cdot \frac{T_{12}^4 - T_{10}^4}{\left(\frac{1 - \varepsilon_{stl}}{\varepsilon_{stl}} \right) + \frac{1}{F_{12,10}} + \left(\frac{1 - \varepsilon_{stl}}{\varepsilon_{stl}} \right)} - \frac{\sigma}{k_{stl} \cdot t} \cdot \frac{T_{12}^4 - T_{11}^4}{\left(\frac{1 - \varepsilon_{stl}}{\varepsilon_{stl}} \right) + \frac{1}{F_{12,11}} + \left(\frac{1 - \varepsilon_{stl}}{\varepsilon_{stl}} \right)} - \frac{q_{cool_{12}}}{\pi k_{stl} \cdot D \cdot t \cdot \delta}$$

A&E S CORPORATION	CALCULATION SHEET		
Project No. 0509206.01	Calculation No. 0509206.01-M-004	Rev. No. 1	Page No. 76 of 159
Title: DBVS AWTE Thermal Load Inventory			
Prepared By: P.S. Lowery	Date: 2.14.06	Checked By: S.R. Pierce	Date: 2.15.06

DBVS AWTE Feed Chute Thermal Load Calc

Now define the energy equations for the air column elements ...

$$\frac{T_{102} - 2\cdot T_{101} + T_0}{s^2} - \frac{4\cdot \xi_V}{k_A\cdot D}\cdot\left(\left|T_{101} - T_1\right|\right)^{\frac{1}{3}}\cdot\left(T_{101} - T_1\right) - \frac{4m_{dot}\cdot C_P}{\pi\cdot k_A\cdot D^2\cdot s}\cdot\left(T_{101} - T_0\right) = 0$$

$$\frac{T_{103} - 2\cdot T_{102} + T_{101}}{s^2} - \frac{4\cdot \xi_V}{k_A\cdot D}\cdot\left(\left|T_{102} - T_2\right|\right)^{\frac{1}{3}}\cdot\left(T_{102} - T_2\right) - \frac{4m_{dot}\cdot C_P}{\pi\cdot k_A\cdot D^2\cdot s}\cdot\left(T_{102} - T_{101}\right) = 0$$

$$\frac{T_{104} - 2\cdot T_{103} + T_{102}}{s^2} - \frac{4\cdot \xi_V}{k_A\cdot D}\cdot\left(\left|T_{103} - T_3\right|\right)^{\frac{1}{3}}\cdot\left(T_{103} - T_3\right) - \frac{4m_{dot}\cdot C_P}{\pi\cdot k_A\cdot D^2\cdot s}\cdot\left(T_{103} - T_{102}\right) = 0$$

$$\frac{T_{105} - 2\cdot T_{104} + T_{103}}{s^2} - \frac{4\cdot \xi_V}{k_A\cdot D}\cdot\left(\left|T_{104} - T_4\right|\right)^{\frac{1}{3}}\cdot\left(T_{104} - T_4\right) - \frac{4m_{dot}\cdot C_P}{\pi\cdot k_A\cdot D^2\cdot s}\cdot\left(T_{104} - T_{103}\right) = 0$$

$$\frac{T_{106} - 2\cdot T_{105} + T_{104}}{s^2} - \frac{4\cdot \xi_V}{k_A\cdot D}\cdot\left(\left|T_{105} - T_5\right|\right)^{\frac{1}{3}}\cdot\left(T_{105} - T_5\right) - \frac{4m_{dot}\cdot C_P}{\pi\cdot k_A\cdot D^2\cdot s}\cdot\left(T_{105} - T_{104}\right) = 0$$

$$\frac{T_{107} - 2\cdot T_{106} + T_{105}}{s^2} - \frac{4\cdot \xi_V}{k_A\cdot D}\cdot\left(\left|T_{106} - T_6\right|\right)^{\frac{1}{3}}\cdot\left(T_{106} - T_6\right) - \frac{4m_{dot}\cdot C_P}{\pi\cdot k_A\cdot D^2\cdot s}\cdot\left(T_{106} - T_{105}\right) = 0$$

$$\frac{T_{108} - 2\cdot T_{107} + T_{106}}{s^2} - \frac{4\cdot \xi_V}{k_A\cdot D}\cdot\left(\left|T_{107} - T_7\right|\right)^{\frac{1}{3}}\cdot\left(T_{107} - T_7\right) - \frac{4m_{dot}\cdot C_P}{\pi\cdot k_A\cdot D^2\cdot s}\cdot\left(T_{107} - T_{106}\right) = 0$$

$$\frac{T_{109} - 2\cdot T_{108} + T_{107}}{s^2} - \frac{4\cdot \xi_V}{k_A\cdot D}\cdot\left(\left|T_{108} - T_8\right|\right)^{\frac{1}{3}}\cdot\left(T_{108} - T_8\right) - \frac{4m_{dot}\cdot C_P}{\pi\cdot k_A\cdot D^2\cdot s}\cdot\left(T_{108} - T_{107}\right) = 0$$

$$\frac{T_{110} - 2\cdot T_{109} + T_{108}}{s^2} - \frac{4\cdot \xi_V}{k_A\cdot D}\cdot\left(\left|T_{109} - T_9\right|\right)^{\frac{1}{3}}\cdot\left(T_{109} - T_9\right) - \frac{4m_{dot}\cdot C_P}{\pi\cdot k_A\cdot D^2\cdot s}\cdot\left(T_{109} - T_{108}\right) = 0$$

A.N.E.S. CORPORATION	CALCULATION SHEET		
Project No. 0509206.01	Calculation No. 0509206.01-M-004	Rev. No. 1	Page No. 77 of 159
Title: DBVS AWTE Thermal Load Inventory			
Prepared By: P.S. Lowery	Date: 2.14.06	Checked By: S.R. Pierce	Date: 2.15.06

DBVS AWTE Feed Chute Thermal Load Calc

$$\frac{T_{111} - 2\cdot T_{110} + T_{109}}{\delta^2} - \frac{4\cdot\xi_V}{k_A\cdot D}\cdot\left(\left|T_{110} - T_{10}\right|\right)^{\frac{1}{3}}\cdot\left(T_{110} - T_{10}\right) - \frac{4\cdot m_{dot}\cdot C_P}{\pi\cdot k_A\cdot D^2\cdot\delta}\cdot\left(T_{110} - T_{109}\right) = 0$$

$$\frac{T_{112} - 2\cdot T_{111} + T_{110}}{\delta^2} - \frac{4\cdot\xi_V}{k_A\cdot D}\cdot\left(\left|T_{111} - T_{11}\right|\right)^{\frac{1}{3}}\cdot\left(T_{111} - T_{11}\right) - \frac{4\cdot m_{dot}\cdot C_P}{\pi\cdot k_A\cdot D^2\cdot\delta}\cdot\left(T_{111} - T_{110}\right) = 0$$

$$\frac{T_{112} - T_{111}}{\delta^2} + \frac{4\cdot\xi_V}{k_A\cdot D}\cdot\left(\left|T_{112} - T_{12}\right|\right)^{\frac{1}{3}}\cdot\left(T_{112} - T_{12}\right) - \frac{4\cdot m_{dot}\cdot C_P}{\pi\cdot k_A\cdot D^2\cdot\delta}\cdot\left(T_{112} - T_{111}\right) = 0$$

$$\begin{pmatrix} T1 \\ T2 \\ T3 \\ T4 \\ T5 \\ T6 \\ T7 \\ T8 \\ T9 \\ T10 \\ T11 \\ T12 \\ T101 \\ T102 \\ T103 \\ T104 \\ T105 \\ T106 \\ T107 \\ T108 \\ T109 \\ T110 \\ T111 \\ T112 \end{pmatrix} := \mathrm{Find}(T_1, T_2, T_3, T_4, T_5, T_6, T_7, T_8, T_9, T_{10}, T_{11}, T_{12}, T_{101}, T_{102}, T_{103}, T_{104}, T_{105}, T_{106}, T_{107}, T_{108}, T_{109}, T$$

Page 12

Calculation Sheet: QAP 3.1, Rev. 6 (11-15-05)

CALCULATION SHEET

Project No. 0509206.01	Calculation No. 0509206.01-M-004	Rev. No. 1	Page No. 78 of 159
Title: DBVS AWTE Thermal Load Inventory			
Prepared By: P.S. Lowery	Date: 2.14.06	Checked By: S.R. Pierce	Date: 2.15.06

DBVS AWTE Feed Chute Thermal Load Calc

Temperatures for the steel chute are ...

T1 = 755.093 K	T1C := KtoC(T1)	T1C = 483.943
T2 = 491.673 K	T2C := KtoC(T2)	T2C = 218.523
T3 = 371.092 K	T3C := KtoC(T3)	T3C = 97.942
T4 = 329.803 K	T4C := KtoC(T4)	T4C = 56.653
T5 = 311.204 K	T5C := KtoC(T5)	T5C = 38.054
T6 = 301.753 K	T6C := KtoC(T6)	T6C = 28.603
T7 = 299.223 K	T7C := KtoC(T7)	T7C = 26.073
T8 = 298.482 K	T8C := KtoC(T8)	T8C = 25.332
T9 = 298.255 K	T9C := KtoC(T9)	T9C = 25.105
T10 = 298.183 K	T10C := KtoC(T10)	T10C = 25.033
T11 = 298.159 K	T11C := KtoC(T11)	T11C = 25.009
T12 = 298.147 K	T12C := KtoC(T12)	T12C = 24.997

Temperature for the air column inside the chute are ...

T101 = 752.025 K	T101C := KtoC(T101)	T101C = 478.875
T102 = 493.526 K	T102C := KtoC(T102)	T102C = 220.376
T103 = 372.318 K	T103C := KtoC(T103)	T103C = 99.168
T104 = 330.291 K	T104C := KtoC(T104)	T104C = 57.141
T105 = 311.451 K	T105C := KtoC(T105)	T105C = 38.301
T106 = 301.949 K	T106C := KtoC(T106)	T106C = 28.799
T107 = 299.293 K	T107C := KtoC(T107)	T107C = 26.147
T108 = 298.512 K	T108C := KtoC(T108)	T108C = 25.362
T109 = 298.267 K	T109C := KtoC(T109)	T109C = 25.117
T110 = 298.188 K	T110C := KtoC(T110)	T110C = 25.038
T111 = 298.161 K	T111C := KtoC(T111)	T111C = 25.011
T112 = 298.149 K	T112C := KtoC(T112)	T112C = 24.999

CALCULATION SHEET

Project No. 0509206.01	Calculation No. 0509206.01-M-004	Rev. No. 1	Page No. 79 of 159
Title: DBVS AWTE Thermal Load Inventory			
Prepared By: P.S. Lowery	Date: 2.14.06	Checked By: S.R. Pierce	Date: 2.15.06

DBVS AWTE Feed Chute Thermal Load Calc

$$T_{plot} := \begin{pmatrix} T1C \\ T2C \\ T3C \\ T4C \\ T5C \\ T6C \\ T7C \\ T8C \\ T9C \\ T10C \\ T11C \\ T12C \end{pmatrix} \qquad zplot := \begin{pmatrix} 0.5 \\ 1.5 \\ 2.5 \\ 3.5 \\ 4.5 \\ 5.5 \\ 6.5 \\ 7.5 \\ 8.5 \\ 9.5 \\ 10.5 \\ 11.5 \end{pmatrix}$$

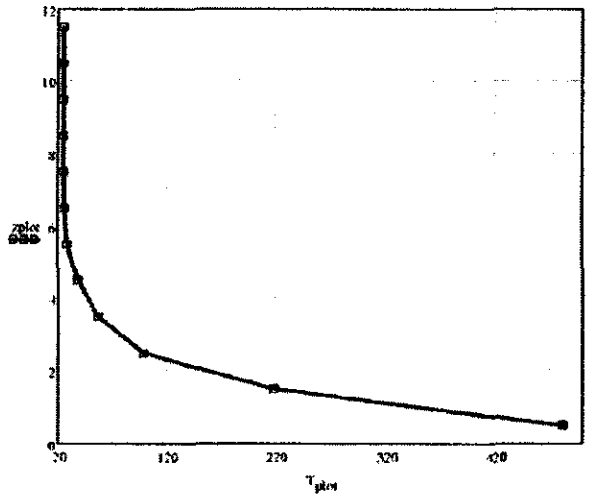

Page 14

Calculation Sheet: QAP 3.1, Rev. 6 (11-15-05)

A.R.E.S. CORPORATION	CALCULATION SHEET		
Project No. 0509206.01	Calculation No. 0509206.01-M-004	Rev. No. 1	Page No. 80 of 159
Title: DBVS AWTE Thermal Load Inventory			
Prepared By: P.S. Lowery	Date: 2.14.06	Checked By: S.R. Pierce	Date: 2.15.06

DBVS AWTE Feed Chute Thermal Load Calc

Now compute the heat loss from the chute to the AWTE room ...

$$Q := \begin{bmatrix} \pi \cdot D \cdot \delta \left[\xi_V \left(\left| T1 - T_{room} \right| \right)^{\frac{1}{3}} \cdot \left(T1 - T_{room} \right) + \sigma \cdot \varepsilon_{stl} \left(T1^4 - T_{room}^4 \right) \right] \\ \pi \cdot D \cdot \delta \left[\xi_V \left(\left| T2 - T_{room} \right| \right)^{\frac{1}{3}} \cdot \left(T2 - T_{room} \right) + \sigma \cdot \varepsilon_{stl} \left(T2^4 - T_{room}^4 \right) \right] \\ \pi \cdot D \cdot \delta \left[\xi_V \left(\left| T3 - T_{room} \right| \right)^{\frac{1}{3}} \cdot \left(T3 - T_{room} \right) + \sigma \cdot \varepsilon_{stl} \left(T3^4 - T_{room}^4 \right) \right] \\ \pi \cdot D \cdot \delta \left[\xi_V \left(\left| T4 - T_{room} \right| \right)^{\frac{1}{3}} \cdot \left(T4 - T_{room} \right) + \sigma \cdot \varepsilon_{stl} \left(T4^4 - T_{room}^4 \right) \right] \\ \pi \cdot D \cdot \delta \left[\xi_V \left(\left| T5 - T_{room} \right| \right)^{\frac{1}{3}} \cdot \left(T5 - T_{room} \right) + \sigma \cdot \varepsilon_{stl} \left(T5^4 - T_{room}^4 \right) \right] \\ \pi \cdot D \cdot \delta \left[\xi_V \left(\left| T6 - T_{room} \right| \right)^{\frac{1}{3}} \cdot \left(T6 - T_{room} \right) + \sigma \cdot \varepsilon_{stl} \left(T6^4 - T_{room}^4 \right) \right] \\ \pi \cdot D \cdot \delta \left[\xi_V \left(\left| T7 - T_{room} \right| \right)^{\frac{1}{3}} \cdot \left(T7 - T_{room} \right) + \sigma \cdot \varepsilon_{stl} \left(T7^4 - T_{room}^4 \right) \right] \\ \pi \cdot D \cdot \delta \left[\xi_V \left(\left| T8 - T_{room} \right| \right)^{\frac{1}{3}} \cdot \left(T8 - T_{room} \right) + \sigma \cdot \varepsilon_{stl} \left(T8^4 - T_{room}^4 \right) \right] \\ \pi \cdot D \cdot \delta \left[\xi_V \left(\left| T9 - T_{room} \right| \right)^{\frac{1}{3}} \cdot \left(T9 - T_{room} \right) + \sigma \cdot \varepsilon_{stl} \left(T9^4 - T_{room}^4 \right) \right] \\ \pi \cdot D \cdot \delta \left[\xi_V \left(\left| T10 - T_{room} \right| \right)^{\frac{1}{3}} \cdot \left(T10 - T_{room} \right) + \sigma \cdot \varepsilon_{stl} \left(T10^4 - T_{room}^4 \right) \right] \\ \pi \cdot D \cdot \delta \left[\xi_V \left(\left| T11 - T_{room} \right| \right)^{\frac{1}{3}} \cdot \left(T11 - T_{room} \right) + \sigma \cdot \varepsilon_{stl} \left(T11^4 - T_{room}^4 \right) \right] \\ \pi \cdot D \cdot \delta \left[\xi_V \left(\left| T12 - T_{room} \right| \right)^{\frac{1}{3}} \cdot \left(T12 - T_{room} \right) + \sigma \cdot \varepsilon_{stl} \left(T12^4 - T_{room}^4 \right) \right] \end{bmatrix}$$

CALCULATION SHEET

Project No. 0509206.01	Calculation No. 0509206.01-M-004	Rev. No. 1	Page No. 81 of 159
Title: DBVS AWTE Thermal Load Inventory			
Prepared By: P.S. Lowery	Date: 2.14.06	Checked By: S.R. Pierce	Date: 2.15.06

DBVS AWTE Feed Chute Thermal Load Calc

	2	[illegible]
	3	$3.878 \cdot 10^{3}$
	4	761.421
	5	182.011
	6	62.561
	7	21.75
Q =	8	5.068 W
	9	1.356
	10	0.39
	11	0.117
	12	0.036
	13	$9.403 \cdot 10^{-3}$
	14	$-3.179 \cdot 10^{-3}$

Compute the total heat load to the AWTE room ...

$$Q_{sum} := \sum_{n=1}^{12} Q_n \qquad Q_{sum} = 4.913\,kW$$

Page 16

ARES CORPORATION	CALCULATION SHEET		
Project No. 0509206.01	Calculation No. 0509206.01-M-004	Rev. No. 1	Page No. 82 of 159
Title: DBVS AWTE Thermal Load Inventory			
Prepared By: P.S. Lowery	Date: 2.14.06	Checked By: S.R. Pierce	Date: 2.15.06

COOLED CHUTE CASE (WITH CHIMNEY EFFECT)

ARES CORPORATION	CALCULATION SHEET		
Project No. 0509206.01	Calculation No. 0509206.01-M-004	Rev. No. 1	Page No. 83 of 159
Title: DBVS AWTE Thermal Load Inventory			
Prepared By: P.S. Lowery	Date: 2.14.06	Checked By: S.R. Pierce	Date: 2.15.06

DBVS AWTE Feed Chute Thermal Load Calc

°C ≡ 1 °F ≡ 1

$KtoC(x) := \left(\frac{x}{K} - 273.15\right)$ $FtoC(x) := \frac{5}{9}\left(\frac{x}{°F} - 32\right)$

ORIGIN ≡ 1

Model Parameters:

$\sigma := 5.67 \cdot 10^{-8} \frac{W}{m^2 \cdot K^4}$

$k_{stl} := 60.5 \frac{W}{m \cdot K}$

$D := 8in$ $t := 0.148in$ $L_{AW} := 12ft$ $\delta_A := 12in$

$\epsilon_{stl} := 0.85$

$\epsilon_M := 0.7$ $A_M := \frac{(22ft)\cdot(5.5ft)}{\pi \cdot D \cdot 6}$ $A_M = 57.773$ $T_M := (1050 + 273.15)K$ Melt Top Surface Temperature

Natural Convection Heat Transfer Coefficient Correlation Parameters

Natural convection heat transfer coefficients are modeled using correlations from Holman, Heat Transfer, 3rd Edition, p. 219. They are of the form ...

$h = \xi_o (\Delta T)^{1/3}$

where the correlation parameter, ξ_o, reflects the shape and orientation of the surface (the subscript "o" indicates the orientation – e.g., V -> vertical, HU -> horizontal, heated surface facing up, and so on).

$\xi_V := 1.32 \frac{W}{m^2 \cdot \sqrt[3]{K^4}}$ $\xi_{HU} := 1.52 \frac{W}{m^2 \cdot \sqrt[3]{K^4}}$

$T_0 := (FtoC(875°F) + 273.15)K$ Temperature at the base of the portion of the chute "exposed" to the off-gas plenum region

$T_{wall} := (570 + 273.15)K$ Temperature used to represent the O/G wall temperatures for the purposes of radiant heat transfer from the electrode surface

$T_{OG} := (FtoC(875°F) + 273.15)K$ Temperature of the off-gas plenum gases

$T_A := (570 + 273.15)K$ Temperature of the air space between the O/G hood and the AWTE floor

$T_{room} := (FtoC(77°F) + 273.15)K$ Temperature of the AWTE room and the associated internal equipment & structures

Nodes 1 thru 12 represent the steel chute
Node 101 thru 112 represent the air column within the steel chute

Load matrix of view factors, F

$F_{1M} := 0.151$ $F_{2M} := 0.011$ $F_{3M} := 0.002$ $F_{4M} := 0.001$ $F_{5M} := 0.0001$ View factors from the cylindrical segments to the melt surface

Page 1

Calculation Sheet. QAP 3.1. Rev. 6 (11-15-05)

ARES CORPORATION	CALCULATION SHEET		
Project No. 0509206.01	Calculation No. 0509206.01-M-004	Rev. No. 1	Page No. 84 of 159
Title: DBVS AWTE Thermal Load Inventory			
Prepared By: P.S. Lowery	Date: 2.14.06	Checked By: S.R. Pierce	Date: 2.15.06

DBVS AWTE Feed Chute Thermal Load Calc

Estimate the mass flow associated with the "Chimney effect" ...

Model the fluid as air

Properties at 875°F are ... $\rho_A := 0.5043 \frac{kg}{m^3}$ $k_A := 0.040 \frac{W}{m \cdot K}$ $C_p := 1080 \frac{J}{kg \cdot K}$

Properties at 77°F are ... $\rho_{77} := 1.186 \frac{kg}{m^3}$

Average density is ... $\rho_{avg} := \frac{1}{2}(\rho_{77} + \rho_A)$ $\rho_{avg} = 0.845 \frac{kg}{m^3}$

Using the 1D momentum equation, the bulk flow speed is obtained from ...

$u^2 = 2 \cdot g \cdot \Delta\rho \cdot H / \rho_{avg}$

Bulk flow speed is ... $u_{bar} := \sqrt{\frac{2 \cdot g \cdot (\rho_{77} - \rho_A) \cdot L}{\rho_{avg}}}$ $u_{bar} = 7.607 \frac{m}{s}$

The corresponding mass flow rate associated with this density difference is ...

$m_{dot} := \rho_{avg} \cdot u_{bar} \cdot \frac{\pi}{4} \cdot D^2$ $m_{dot} = 0.268 \frac{kg}{s}$

Page 2

CALCULATION SHEET

Project No. 0509206.01	Calculation No. 0509206.01-M-004	Rev. No. 1	Page No. 85 of 159
Title: DBVS AWTE Thermal Load Inventory			
Prepared By: P.S. Lowery	Date: 2.14.06	Checked By: S.R. Pierce	Date: 2.15.06

DBVS AWTE Fuel Chute Thermal Load Calc

$$F_{ij} = \begin{pmatrix} 0.697 & 0.140 & 0.009 & 0.002 & 0 & 0 & 0 & 0 & 0 & 0 & 0 & 0 \\ 0.140 & 0.697 & 0.140 & 0.009 & 0.002 & 0 & 0 & 0 & 0 & 0 & 0 & 0 \\ 0.009 & 0.140 & 0.697 & 0.140 & 0.009 & 0.002 & 0 & 0 & 0 & 0 & 0 & 0 \\ 0.002 & 0.009 & 0.140 & 0.697 & 0.140 & 0.009 & 0.002 & 0 & 0 & 0 & 0 & 0 \\ 0 & 0.002 & 0.009 & 0.140 & 0.697 & 0.140 & 0.009 & 0.002 & 0 & 0 & 0 & 0 \\ 0 & 0 & 0.002 & 0.009 & 0.140 & 0.697 & 0.140 & 0.009 & 0.002 & 0 & 0 & 0 \\ 0 & 0 & 0 & 0.002 & 0.009 & 0.140 & 0.697 & 0.140 & 0.009 & 0.002 & 0 & 0 \\ 0 & 0 & 0 & 0 & 0.002 & 0.009 & 0.140 & 0.697 & 0.140 & 0.009 & 0.002 & 0 \\ 0 & 0 & 0 & 0 & 0 & 0.002 & 0.009 & 0.140 & 0.697 & 0.140 & 0.009 & 0.002 \\ 0 & 0 & 0 & 0 & 0 & 0 & 0.002 & 0.009 & 0.140 & 0.697 & 0.140 & 0.009 \\ 0 & 0 & 0 & 0 & 0 & 0 & 0 & 0.002 & 0.009 & 0.140 & 0.697 & 0.140 \\ 0 & 0 & 0 & 0 & 0 & 0 & 0 & 0 & 0.002 & 0.009 & 0.140 & 0.697 \end{pmatrix}$$

iew factors from a ylindrical segment to its eighboring cylindrical egments. For example, $_{1,3}$ is the view factor from gement 1 in the model to egment 3. $_{1,3}=F_{3,1}=0.009$

$F =$

	1	2	3	4	5	6	7	8	9	10	11	12
1	0.697	0.14	0.009	0.002	0	0	0	0	0	0	0	0
2	0.14	0.697	0.14	0.009	0.002	0	0	0	0	0	0	0
3	0.009	0.14	0.697	0.14	0.009	0.002	0	0	0	0	0	0
4	0.002	0.009	0.14	0.697	0.14	0.009	0.002	0	0	0	0	0
5	0	0.002	0.009	0.14	0.697	0.14	0.009	0.002	0	0	0	0
6	0	0	0.002	0.009	0.14	0.697	0.14	0.009	0.002	0	0	0
7	0	0	0	0.002	0.009	0.14	0.697	0.14	0.009	0.002	0	0
8	0	0	0	0	0.002	0.009	0.14	0.697	0.14	0.009	0.002	0
9	0	0	0	0	0	0.002	0.009	0.14	0.697	0.14	0.009	0.002
10	0	0	0	0	0	0	0.002	0.009	0.14	0.697	0.14	0.009
11	0	0	0	0	0	0	0	0.002	0.009	0.14	0.697	0.14
12	0	0	0	0	0	0	0	0	0.002	0.009	0.14	0.697

Initial guess for temperature d istribution ...

$T_1 := (600 + 273.15)K$ $T_{101} := (600 + 273.15)K$

$T_2 := (600 + 273.15)K$ $T_{102} := (600 + 273.15)K$

$T_3 := (600 + 273.15)K$ $T_{103} := (600 + 273.15)K$

$T_4 := (600 + 273.15)K$ $T_{104} := (600 + 273.15)K$

$T_5 := (600 + 273.15)K$ $T_{105} := (600 + 273.15)K$

$T_6 := (600 + 273.15)K$ $T_{106} := (600 + 273.15)K$

$T_7 := (600 + 273.15)K$ $T_{107} := (600 + 273.15)K$

$T_8 := (600 + 273.15)K$ $T_{108} := (600 + 273.15)K$

$T_9 := (600 + 273.15)K$ $T_{109} := (600 + 273.15)K$

$T_{10} := (600 + 273.15)K$ $T_{110} := (600 + 273.15)K$

$T_{11} := (600 + 273.15)K$ $T_{111} := (600 + 273.15)K$

$T_{12} := (600 + 273.15)K$ $T_{112} := (600 + 273.15)K$

Page 3

CALCULATION SHEET

Project No. 0509206.01	Calculation No. 0509206.01-M-004	Rev. No. 1	Page No. 86 of 159
Title: DBVS AWTE Thermal Load Inventory			
Prepared By: P.S. Lowery	Date: 2.14.06	Checked By: S.R. Pierce	Date: 2.15.06

DBVS AWTE Feed Chute Thermal Load Calc

Set-up a vector of heat sink values for direct cooling of each of the 12 segments used to model the chute. This energy will be removed directly from its associated chute segment in the model. For example, An entry of x in vector element $q_{cool}[5]$ will remove x Watts of from that segment.

$$q_{cool} := \begin{pmatrix} 4300W \\ 0W \\ 0W \\ 0W \\ 0W \\ 0W \\ 0W \\ 0W \\ 0W \\ 0W \\ 0W \\ 0W \\ 0W \end{pmatrix}$$

Page 4

Calculation Sheet: QAP 3.1, Rev. 6 (11-15-05)

ARES CORPORATION	CALCULATION SHEET		
Project No. 0509206.01	Calculation No. 0509206.01-M-004	Rev. No. 1	Page No. 87 of 159
Title: DBVS AWTE Thermal Load Inventory			
Prepared By: P.S. Lowery	Date: 2.14.06	Checked By: S.R. Pierce	Date: 2.15.06

DBVS AWTE Feed Chute Thermal Load Calc

Given

First define the energy balance equations for the steel chute elements ...

$$\frac{T_2 - 2\cdot T_1 + T_0}{\delta^2} - \frac{\xi_V}{k_{stl}\cdot t}\left[\left(\left|T_1 - T_{101}\right|\right)^{\frac{1}{3}}\cdot\left(T_1 - T_{101}\right) + \left(\left|T_1 - T_{room}\right|\right)^{\frac{1}{3}}\cdot\left(T_1 - T_{room}\right)\right] - = 0$$

$$+ 0 - \frac{\sigma\cdot\varepsilon_{stl}}{k_{stl}\cdot t}\left(T_1^{\,4} - T_{room}^{\,4}\right) - \frac{\sigma}{k_{stl}\cdot t}\cdot\frac{T_1^{\,4} - T_M^{\,4}}{\left(\frac{1-\varepsilon_{stl}}{\varepsilon_{stl}}\right) + \frac{1}{F_{1M}} + \left(\frac{1-\varepsilon_M}{\varepsilon_M\cdot A_M}\right)} -$$

$$+ 0 - \frac{\sigma}{k_{stl}\cdot t}\cdot\frac{T_1^{\,4} - T_2^{\,4}}{\left(\frac{1-\varepsilon_{stl}}{\varepsilon_{stl}}\right) + \frac{1}{F_{1,2}} + \left(\frac{1-\varepsilon_{stl}}{\varepsilon_{stl}}\right)} - \frac{\sigma}{k_{stl}\cdot t}\cdot\frac{T_1^{\,4} - T_3^{\,4}}{\left(\frac{1-\varepsilon_{stl}}{\varepsilon_{stl}}\right) + \frac{1}{F_{1,3}} + \left(\frac{1-\varepsilon_{stl}}{\varepsilon_{stl}}\right)} -$$

$$+ 0 - \frac{\sigma}{k_{stl}\cdot t}\cdot\frac{T_1^{\,4} - T_4^{\,4}}{\left(\frac{1-\varepsilon_{stl}}{\varepsilon_{stl}}\right) + \frac{1}{F_{1,4}} + \left(\frac{1-\varepsilon_{stl}}{\varepsilon_{stl}}\right)} - \frac{q_{cool_1}}{\pi k_{stl}\cdot D\cdot t\cdot\delta}$$

$$\frac{T_3 - 2\cdot T_2 + T_1}{\delta^2} - \frac{\xi_V}{k_{stl}\cdot t}\left[\left(\left|T_2 - T_{102}\right|\right)^{\frac{1}{3}}\cdot\left(T_2 - T_{102}\right) + \left(\left|T_2 - T_{room}\right|\right)^{\frac{1}{3}}\cdot\left(T_2 - T_{room}\right)\right] - \qquad = 0$$

$$+ 0 - \frac{\sigma\cdot\varepsilon_{stl}}{k_{stl}\cdot t}\left(T_2^{\,4} - T_{room}^{\,4}\right) - \frac{\sigma}{k_{stl}\cdot t}\cdot\frac{T_2^{\,4} - T_M^{\,4}}{\left(\frac{1-\varepsilon_{stl}}{\varepsilon_{stl}}\right) + \frac{1}{F_{2M}} + \left(\frac{1-\varepsilon_M}{\varepsilon_M\cdot A_M}\right)} -$$

$$+ 0 - \frac{\sigma}{k_{stl}\cdot t}\cdot\frac{T_2^{\,4} - T_1^{\,4}}{\left(\frac{1-\varepsilon_{stl}}{\varepsilon_{stl}}\right) + \frac{1}{F_{2,1}} + \left(\frac{1-\varepsilon_{stl}}{\varepsilon_{stl}}\right)} - \frac{\sigma}{k_{stl}\cdot t}\cdot\frac{T_2^{\,4} - T_3^{\,4}}{\left(\frac{1-\varepsilon_{stl}}{\varepsilon_{stl}}\right) + \frac{1}{F_{2,3}} + \left(\frac{1-\varepsilon_{stl}}{\varepsilon_{stl}}\right)} -$$

$$+ 0 - \frac{\sigma}{k_{stl}\cdot t}\cdot\frac{T_2^{\,4} - T_4^{\,4}}{\left(\frac{1-\varepsilon_{stl}}{\varepsilon_{stl}}\right) + \frac{1}{F_{2,4}} + \left(\frac{1-\varepsilon_{stl}}{\varepsilon_{stl}}\right)} - \frac{\sigma}{k_{stl}\cdot t}\cdot\frac{T_2^{\,4} - T_5^{\,4}}{\left(\frac{1-\varepsilon_{stl}}{\varepsilon_{stl}}\right) + \frac{1}{F_{2,5}} + \left(\frac{1-\varepsilon_{stl}}{\varepsilon_{stl}}\right)} - \frac{q_{cool_2}}{\pi k_{stl}\cdot D\cdot t\cdot\delta}$$

Page 5

Calculation Sheet: QAP 3.1, Rev. 6 (11-15-05)

ARES CORPORATION	CALCULATION SHEET		
Project No. 0509206.01	Calculation No. 0509206.01-M-004	Rev. No. 1	Page No. 88 of 159
Title: DBVS AWTE Thermal Load Inventory			
Prepared By: P.S. Lowery	Date: 2.14.06	Checked By: S.R. Pierce	Date: 2.15.06

DBVS AWTE Feed Chute Thermal Load Calc

$$\frac{T_4 - 2\cdot T_3 + T_2}{\delta^2} - \frac{\delta V}{k_{stl}\cdot t}\left[\left(\left|T_3 - T_{103}\right|\right)^{\frac{1}{3}}\cdot\left(T_3 - T_{103}\right) + \left(\left|T_3 - T_{room}\right|\right)^{\frac{1}{3}}\cdot\left(T_3 - T_{room}\right)\right] \ldots = 0$$

$$+0 - \frac{\sigma\cdot\varepsilon_{stl}}{k_{stl}\cdot t}\left(T_3^{\,4} - T_{room}^{\,4}\right) - \frac{\sigma}{k_{stl}\cdot t}\cdot\frac{T_3^{\,4} - T_M^{\,4}}{\left(\frac{1-\varepsilon_{stl}}{\varepsilon_{stl}}\right) + \frac{1}{F_{3M}} + \left(\frac{1-\varepsilon_M}{\varepsilon_M\cdot A_M}\right)} \ldots$$

$$+0 - \frac{\sigma}{k_{stl}\cdot t}\cdot\frac{T_3^{\,4} - T_1^{\,4}}{\left(\frac{1-\varepsilon_{stl}}{\varepsilon_{stl}}\right) + \frac{1}{F_{3,1}} + \left(\frac{1-\varepsilon_{stl}}{\varepsilon_{stl}}\right)} - \frac{\sigma}{k_{stl}\cdot t}\cdot\frac{T_3^{\,4} - T_2^{\,4}}{\left(\frac{1-\varepsilon_{stl}}{\varepsilon_{stl}}\right) + \frac{1}{F_{3,2}} + \left(\frac{1-\varepsilon_{stl}}{\varepsilon_{stl}}\right)} \ldots$$

$$+0 - \frac{\sigma}{k_{stl}\cdot t}\cdot\frac{T_3^{\,4} - T_4^{\,4}}{\left(\frac{1-\varepsilon_{stl}}{\varepsilon_{stl}}\right) + \frac{1}{F_{3,4}} + \left(\frac{1-\varepsilon_{stl}}{\varepsilon_{stl}}\right)} - \frac{\sigma}{k_{stl}\cdot t}\cdot\frac{T_3^{\,4} - T_5^{\,4}}{\left(\frac{1-\varepsilon_{stl}}{\varepsilon_{stl}}\right) + \frac{1}{F_{3,5}} + \left(\frac{1-\varepsilon_{stl}}{\varepsilon_{stl}}\right)} \ldots$$

$$+0 - \frac{\sigma}{k_{stl}\cdot t}\cdot\frac{T_3^{\,4} - T_6^{\,4}}{\left(\frac{1-\varepsilon_{stl}}{\varepsilon_{stl}}\right) + \frac{1}{F_{3,6}} + \left(\frac{1-\varepsilon_{stl}}{\varepsilon_{stl}}\right)} - \frac{q_{cool_3}}{\pi k_{stl}\cdot D\cdot t\cdot S}$$

$$\frac{T_5 - 2\cdot T_4 + T_3}{\delta^2} - \frac{\delta V}{k_{stl}\cdot t}\left[\left(\left|T_4 - T_{104}\right|\right)^{\frac{1}{3}}\cdot\left(T_4 - T_{104}\right) + \left(\left|T_4 - T_{room}\right|\right)^{\frac{1}{3}}\cdot\left(T_4 - T_{room}\right)\right] \ldots = 0$$

$$+0 - \frac{\sigma\cdot\varepsilon_{stl}}{k_{stl}\cdot t}\left(T_4^{\,4} - T_{room}^{\,4}\right) - \frac{\sigma}{k_{stl}\cdot t}\cdot\frac{T_4^{\,4} - T_M^{\,4}}{\left(\frac{1-\varepsilon_{stl}}{\varepsilon_{stl}}\right) + \frac{1}{F_{4M}} + \left(\frac{1-\varepsilon_M}{\varepsilon_M\cdot A_M}\right)} \ldots$$

$$+0 - \frac{\sigma}{k_{stl}\cdot t}\cdot\frac{T_4^{\,4} - T_1^{\,4}}{\left(\frac{1-\varepsilon_{stl}}{\varepsilon_{stl}}\right) + \frac{1}{F_{4,1}} + \left(\frac{1-\varepsilon_{stl}}{\varepsilon_{stl}}\right)} - \frac{\sigma}{k_{stl}\cdot t}\cdot\frac{T_4^{\,4} - T_2^{\,4}}{\left(\frac{1-\varepsilon_{stl}}{\varepsilon_{stl}}\right) + \frac{1}{F_{4,2}} + \left(\frac{1-\varepsilon_{stl}}{\varepsilon_{stl}}\right)} \ldots$$

$$+0 - \frac{\sigma}{k_{stl}\cdot t}\cdot\frac{T_4^{\,4} - T_3^{\,4}}{\left(\frac{1-\varepsilon_{stl}}{\varepsilon_{stl}}\right) + \frac{1}{F_{4,3}} + \left(\frac{1-\varepsilon_{stl}}{\varepsilon_{stl}}\right)} - \frac{\sigma}{k_{stl}\cdot t}\cdot\frac{T_4^{\,4} - T_5^{\,4}}{\left(\frac{1-\varepsilon_{stl}}{\varepsilon_{stl}}\right) + \frac{1}{F_{4,5}} + \left(\frac{1-\varepsilon_{stl}}{\varepsilon_{stl}}\right)} \ldots$$

$$+0 - \frac{\sigma}{k_{stl}\cdot t}\cdot\frac{T_4^{\,4} - T_6^{\,4}}{\left(\frac{1-\varepsilon_{stl}}{\varepsilon_{stl}}\right) + \frac{1}{F_{4,6}} + \left(\frac{1-\varepsilon_{stl}}{\varepsilon_{stl}}\right)} - \frac{\sigma}{k_{stl}\cdot t}\cdot\frac{T_4^{\,4} - T_7^{\,4}}{\left(\frac{1-\varepsilon_{stl}}{\varepsilon_{stl}}\right) + \frac{1}{F_{4,7}} + \left(\frac{1-\varepsilon_{stl}}{\varepsilon_{stl}}\right)} - \frac{q_{cool_4}}{\pi k_{stl}\cdot D\cdot t\cdot S}$$

Page 6

A&E S CORPORATION	CALCULATION SHEET		
Project No. 0509206.01	Calculation No. 0509206.01-M-004	Rev. No. 1	Page No. 89 of 159
Title: DBVS AWTE Thermal Load Inventory			
Prepared By: P.S. Lowery	Date: 2.14.06	Checked By: S.R. Pierce	Date: 2.15.06

DBVS AWTE Feed Chute Thermal Load Calc

$$\frac{T_6 - 2\cdot T_5 + T_4}{\delta^2} - \frac{\delta_V}{k_{stl}\cdot t}\left[\left(\left|T_5 - T_{106}\right|\right)^{\frac{1}{3}}\cdot\left(T_5 - T_{106}\right) + \left(\left|T_5 - T_{room}\right|\right)^{\frac{1}{3}}\cdot\left(T_5 - T_{room}\right)\right] \ldots = 0$$

$$+0 - \frac{\sigma\cdot\varepsilon_{stl}}{k_{stl}\cdot t}\left(T_5^{\,4} - T_{room}^{\,4}\right) - \frac{\sigma}{k_{stl}\cdot t}\cdot\frac{T_5^{\,4} - T_M^{\,4}}{\left(\frac{1-\varepsilon_{stl}}{\varepsilon_{stl}}\right) + \frac{1}{F_{5M}} + \left(\frac{1-\varepsilon_M}{\varepsilon_M\cdot A_M}\right)} \ldots$$

$$+0 - \frac{\sigma}{k_{stl}\cdot t}\cdot\frac{T_5^{\,4} - T_2^{\,4}}{\left(\frac{1-\varepsilon_{stl}}{\varepsilon_{stl}}\right) + \frac{1}{F_{5,2}} + \left(\frac{1-\varepsilon_{stl}}{\varepsilon_{stl}}\right)} \ldots$$

$$+0 - \frac{\sigma}{k_{stl}\cdot t}\cdot\frac{T_5^{\,4} - T_3^{\,4}}{\left(\frac{1-\varepsilon_{stl}}{\varepsilon_{stl}}\right) + \frac{1}{F_{5,3}} + \left(\frac{1-\varepsilon_{stl}}{\varepsilon_{stl}}\right)} - \frac{\sigma}{k_{stl}\cdot t}\cdot\frac{T_5^{\,4} - T_4^{\,4}}{\left(\frac{1-\varepsilon_{stl}}{\varepsilon_{stl}}\right) + \frac{1}{F_{5,4}} + \left(\frac{1-\varepsilon_{stl}}{\varepsilon_{stl}}\right)} \ldots$$

$$+0 - \frac{\sigma}{k_{stl}\cdot t}\cdot\frac{T_5^{\,4} - T_6^{\,4}}{\left(\frac{1-\varepsilon_{stl}}{\varepsilon_{stl}}\right) + \frac{1}{F_{5,6}} + \left(\frac{1-\varepsilon_{stl}}{\varepsilon_{stl}}\right)} - \frac{\sigma}{k_{stl}\cdot t}\cdot\frac{T_5^{\,4} - T_7^{\,4}}{\left(\frac{1-\varepsilon_{stl}}{\varepsilon_{stl}}\right) + \frac{1}{F_{5,7}} + \left(\frac{1-\varepsilon_{stl}}{\varepsilon_{stl}}\right)} \ldots$$

$$+0 - \frac{\sigma}{k_{stl}\cdot t}\cdot\frac{T_5^{\,4} - T_8^{\,4}}{\left(\frac{1-\varepsilon_{stl}}{\varepsilon_{stl}}\right) + \frac{1}{F_{5,8}} + \left(\frac{1-\varepsilon_{stl}}{\varepsilon_{stl}}\right)} - \frac{q_{cool_5}}{\pi\cdot k_{stl}\cdot D\cdot t\cdot\delta}$$

$$\frac{T_7 - 2\cdot T_6 + T_5}{\delta^2} - \frac{\delta_V}{k_{stl}\cdot t}\left[\left(\left|T_6 - T_{106}\right|\right)^{\frac{1}{3}}\cdot\left(T_6 - T_{106}\right) + \left(\left|T_6 - T_{room}\right|\right)^{\frac{1}{3}}\cdot\left(T_6 - T_{room}\right)\right] \ldots = 0$$

$$+0 - \frac{\sigma\cdot\varepsilon_{stl}}{k_{stl}\cdot t}\left(T_6^{\,4} - T_{room}^{\,4}\right) - \frac{\sigma}{k_{stl}\cdot t}\cdot\frac{T_6^{\,4} - T_3^{\,4}}{\left(\frac{1-\varepsilon_{stl}}{\varepsilon_{stl}}\right) + \frac{1}{F_{6,3}} + \left(\frac{1-\varepsilon_{stl}}{\varepsilon_{stl}}\right)} \ldots$$

$$+0 - \frac{\sigma}{k_{stl}\cdot t}\cdot\frac{T_6^{\,4} - T_4^{\,4}}{\left(\frac{1-\varepsilon_{stl}}{\varepsilon_{stl}}\right) + \frac{1}{F_{6,4}} + \left(\frac{1-\varepsilon_{stl}}{\varepsilon_{stl}}\right)} - \frac{\sigma}{k_{stl}\cdot t}\cdot\frac{T_6^{\,4} - T_5^{\,4}}{\left(\frac{1-\varepsilon_{stl}}{\varepsilon_{stl}}\right) + \frac{1}{F_{6,5}} + \left(\frac{1-\varepsilon_{stl}}{\varepsilon_{stl}}\right)} \ldots$$

$$+0 - \frac{\sigma}{k_{stl}\cdot t}\cdot\frac{T_6^{\,4} - T_7^{\,4}}{\left(\frac{1-\varepsilon_{stl}}{\varepsilon_{stl}}\right) + \frac{1}{F_{6,7}} + \left(\frac{1-\varepsilon_{stl}}{\varepsilon_{stl}}\right)} - \frac{\sigma}{k_{stl}\cdot t}\cdot\frac{T_6^{\,4} - T_8^{\,4}}{\left(\frac{1-\varepsilon_{stl}}{\varepsilon_{stl}}\right) + \frac{1}{F_{6,8}} + \left(\frac{1-\varepsilon_{stl}}{\varepsilon_{stl}}\right)} \ldots$$

$$+0 - \frac{\sigma}{k_{stl}\cdot t}\cdot\frac{T_6^{\,4} - T_9^{\,4}}{\left(\frac{1-\varepsilon_{stl}}{\varepsilon_{stl}}\right) + \frac{1}{F_{6,9}} + \left(\frac{1-\varepsilon_{stl}}{\varepsilon_{stl}}\right)} - \frac{q_{cool_6}}{\pi\cdot k_{stl}\cdot D\cdot t\cdot\delta}$$

ARES CORPORATION	CALCULATION SHEET		
Project No. 0509206.01	Calculation No. 0509206.01-M-004	Rev. No. 1	Page No. 90 of 159
Title: DBVS AWTE Thermal Load Inventory			
Prepared By: P.S. Lowery	Date: 2.14.06	Checked By: S.R. Pierce	Date: 2.15.06

DBVS AWTE Feed Chute Thermal Load Calc

$$\frac{T_8 - 2\cdot T_7 + T_6}{s^2} - \frac{S_V}{k_{stl}\cdot t}\left[\left(\left|T_7 - T_{107}\right|\right)^{\frac{1}{3}}\cdot\left(T_7 - T_{107}\right) + \left(\left|T_7 - T_{room}\right|\right)^{\frac{1}{3}}\cdot\left(T_7 - T_{room}\right)\right] \ldots = 0$$

$$+0 - \frac{\sigma\cdot\varepsilon_{stl}}{k_{stl}\cdot t}\cdot\left(T_7^{\,4} - T_{room}^{\,4}\right) - \frac{\sigma}{k_{stl}\cdot t}\cdot\frac{T_7^{\,4} - T_4^{\,4}}{\left(\frac{1-\varepsilon_{stl}}{\varepsilon_{stl}}\right) + \frac{1}{F_{7,4}} + \left(\frac{1-\varepsilon_{stl}}{\varepsilon_{stl}}\right)} \ldots$$

$$+0 - \frac{\sigma}{k_{stl}\cdot t}\cdot\frac{T_7^{\,4} - T_5^{\,4}}{\left(\frac{1-\varepsilon_{stl}}{\varepsilon_{stl}}\right) + \frac{1}{F_{7,5}} + \left(\frac{1-\varepsilon_{stl}}{\varepsilon_{stl}}\right)} - \frac{\sigma}{k_{stl}\cdot t}\cdot\frac{T_7^{\,4} - T_6^{\,4}}{\left(\frac{1-\varepsilon_{stl}}{\varepsilon_{stl}}\right) + \frac{1}{F_{7,6}} + \left(\frac{1-\varepsilon_{stl}}{\varepsilon_{stl}}\right)} \ldots$$

$$+0 - \frac{\sigma}{k_{stl}\cdot t}\cdot\frac{T_7^{\,4} - T_8^{\,4}}{\left(\frac{1-\varepsilon_{stl}}{\varepsilon_{stl}}\right) + \frac{1}{F_{7,8}} + \left(\frac{1-\varepsilon_{stl}}{\varepsilon_{stl}}\right)} - \frac{\sigma}{k_{stl}\cdot t}\cdot\frac{T_7^{\,4} - T_9^{\,4}}{\left(\frac{1-\varepsilon_{stl}}{\varepsilon_{stl}}\right) + \frac{1}{F_{7,9}} + \left(\frac{1-\varepsilon_{stl}}{\varepsilon_{stl}}\right)} \ldots$$

$$+0 - \frac{\sigma}{k_{stl}\cdot t}\cdot\frac{T_7^{\,4} - T_{10}^{\,4}}{\left(\frac{1-\varepsilon_{stl}}{\varepsilon_{stl}}\right) + \frac{1}{F_{7,10}} + \left(\frac{1-\varepsilon_{stl}}{\varepsilon_{stl}}\right)} - \frac{q_{cool_7}}{\pi\cdot k_{stl}\cdot D_{i\text{-}t}\cdot\delta}$$

$$\frac{T_9 - 2\cdot T_8 + T_7}{s^2} - \frac{S_V}{k_{stl}\cdot t}\left[\left(\left|T_8 - T_{108}\right|\right)^{\frac{1}{3}}\cdot\left(T_8 - T_{108}\right) + \left(\left|T_8 - T_{room}\right|\right)^{\frac{1}{3}}\cdot\left(T_8 - T_{room}\right)\right] \ldots = 0$$

$$+0 - \frac{\sigma\cdot\varepsilon_{stl}}{k_{stl}\cdot t}\cdot\left(T_8^{\,4} - T_{room}^{\,4}\right) - \frac{\sigma}{k_{stl}\cdot t}\cdot\frac{T_8^{\,4} - T_5^{\,4}}{\left(\frac{1-\varepsilon_{stl}}{\varepsilon_{stl}}\right) + \frac{1}{F_{8,5}} + \left(\frac{1-\varepsilon_{stl}}{\varepsilon_{stl}}\right)} \ldots$$

$$+0 - \frac{\sigma}{k_{stl}\cdot t}\cdot\frac{T_8^{\,4} - T_6^{\,4}}{\left(\frac{1-\varepsilon_{stl}}{\varepsilon_{stl}}\right) + \frac{1}{F_{8,6}} + \left(\frac{1-\varepsilon_{stl}}{\varepsilon_{stl}}\right)} - \frac{\sigma}{k_{stl}\cdot t}\cdot\frac{T_8^{\,4} - T_7^{\,4}}{\left(\frac{1-\varepsilon_{stl}}{\varepsilon_{stl}}\right) + \frac{1}{F_{8,7}} + \left(\frac{1-\varepsilon_{stl}}{\varepsilon_{stl}}\right)} \ldots$$

$$+0 - \frac{\sigma}{k_{stl}\cdot t}\cdot\frac{T_8^{\,4} - T_9^{\,4}}{\left(\frac{1-\varepsilon_{stl}}{\varepsilon_{stl}}\right) + \frac{1}{F_{8,9}} + \left(\frac{1-\varepsilon_{stl}}{\varepsilon_{stl}}\right)} - \frac{\sigma}{k_{stl}\cdot t}\cdot\frac{T_8^{\,4} - T_{10}^{\,4}}{\left(\frac{1-\varepsilon_{stl}}{\varepsilon_{stl}}\right) + \frac{1}{F_{8,10}} + \left(\frac{1-\varepsilon_{stl}}{\varepsilon_{stl}}\right)} \ldots$$

$$+0 - \frac{\sigma}{k_{stl}\cdot t}\cdot\frac{T_8^{\,4} - T_{11}^{\,4}}{\left(\frac{1-\varepsilon_{stl}}{\varepsilon_{stl}}\right) + \frac{1}{F_{8,11}} + \left(\frac{1-\varepsilon_{stl}}{\varepsilon_{stl}}\right)} - \frac{q_{cool_8}}{\pi\cdot k_{stl}\cdot D_{i\text{-}t}\cdot\delta}$$

Page 8

Calculation Sheet: QAP 3.1, Rev. 6 (11-15-05)

ARES CORPORATION	CALCULATION SHEET		
Project No. 0509206.01	Calculation No. 0509206.01-M-004	Rev. No. 1	Page No. 91 of 159
Title: DBVS AWTE Thermal Load Inventory			
Prepared By: P.S. Lowery	Date: 2.14.06	Checked By: S.R. Pierce	Date: 2.15.06

DBVS AWTE Feed Chute Thermal Load Calc

$$\frac{T_{10} - 2\cdot T_9 + T_8}{\delta^2} - \qquad = 0$$

$$+ 0 - \frac{\xi_V}{k_{stl}\cdot t}\left[\left(\left|T_9 - T_{109}\right|\right)^{\frac{1}{3}}\cdot\left(T_9 - T_{109}\right) + \left(\left|T_9 - T_{room}\right|\right)^{\frac{1}{3}}\cdot\left(T_9 - T_{room}\right)\right] -$$

$$+ 0 - \frac{\sigma\cdot\varepsilon_{stl}}{k_{stl}\cdot t}\left(T_9^{\,4} - T_{room}^{\,4}\right) - \frac{\sigma}{k_{stl}\cdot t}\cdot\frac{T_9^{\,4} - T_6^{\,4}}{\left(\frac{1-\varepsilon_{stl}}{\varepsilon_{stl}}\right) + \frac{1}{F_{9,6}} + \left(\frac{1-\varepsilon_{stl}}{\varepsilon_{stl}}\right)} -$$

$$+ 0 - \frac{\sigma}{k_{stl}\cdot t}\cdot\frac{T_9^{\,4} - T_7^{\,4}}{\left(\frac{1-\varepsilon_{stl}}{\varepsilon_{stl}}\right) + \frac{1}{F_{9,7}} + \left(\frac{1-\varepsilon_{stl}}{\varepsilon_{stl}}\right)} - \frac{\sigma}{k_{stl}\cdot t}\cdot\frac{T_9^{\,4} - T_8^{\,4}}{\left(\frac{1-\varepsilon_{stl}}{\varepsilon_{stl}}\right) + \frac{1}{F_{9,8}} + \left(\frac{1-\varepsilon_{stl}}{\varepsilon_{stl}}\right)} -$$

$$- 0 - \frac{\sigma}{k_{stl}\cdot t}\cdot\frac{T_9^{\,4} - T_{10}^{\,4}}{\left(\frac{1-\varepsilon_{stl}}{\varepsilon_{stl}}\right) + \frac{1}{F_{9,10}} + \left(\frac{1-\varepsilon_{stl}}{\varepsilon_{stl}}\right)} - \frac{\sigma}{k_{stl}\cdot t}\cdot\frac{T_9^{\,4} - T_{11}^{\,4}}{\left(\frac{1-\varepsilon_{stl}}{\varepsilon_{stl}}\right) + \frac{1}{F_{9,11}} + \left(\frac{1-\varepsilon_{stl}}{\varepsilon_{stl}}\right)} -$$

$$- 0 - \frac{\sigma}{k_{stl}\cdot t}\cdot\frac{T_9^{\,4} - T_{12}^{\,4}}{\left(\frac{1-\varepsilon_{stl}}{\varepsilon_{stl}}\right) + \frac{1}{F_{9,12}} + \left(\frac{1-\varepsilon_{stl}}{\varepsilon_{stl}}\right)} - \frac{q_{cool_9}}{\pi k_{stl}\cdot D\cdot t\cdot 3}$$

$$\frac{T_{11} - 2\cdot T_{10} + T_9}{\delta^2} - \qquad = 0$$

$$+ 0 - \frac{\xi_V}{k_{stl}\cdot t}\left[\left(\left|T_{10} - T_{110}\right|\right)^{\frac{1}{3}}\cdot\left(T_{10} - T_{110}\right) + \left(\left|T_{10} - T_{room}\right|\right)^{\frac{1}{3}}\cdot\left(T_{10} - T_{room}\right)\right] -$$

$$+ 0 - \frac{\sigma\cdot\varepsilon_{stl}}{k_{stl}\cdot t}\left(T_{10}^{\,4} - T_{room}^{\,4}\right) - \frac{\sigma}{k_{stl}\cdot t}\cdot\frac{T_{10}^{\,4} - T_7^{\,4}}{\left(\frac{1-\varepsilon_{stl}}{\varepsilon_{stl}}\right) + \frac{1}{F_{10,7}} + \left(\frac{1-\varepsilon_{stl}}{\varepsilon_{stl}}\right)} -$$

$$- 0 - \frac{\sigma}{k_{stl}\cdot t}\cdot\frac{T_{10}^{\,4} - T_8^{\,4}}{\left(\frac{1-\varepsilon_{stl}}{\varepsilon_{stl}}\right) + \frac{1}{F_{10,8}} + \left(\frac{1-\varepsilon_{stl}}{\varepsilon_{stl}}\right)} - \frac{\sigma}{k_{stl}\cdot t}\cdot\frac{T_{10}^{\,4} - T_9^{\,4}}{\left(\frac{1-\varepsilon_{stl}}{\varepsilon_{stl}}\right) + \frac{1}{F_{10,9}} + \left(\frac{1-\varepsilon_{stl}}{\varepsilon_{stl}}\right)} -$$

$$+ 0 - \frac{\sigma}{k_{stl}\cdot t}\cdot\frac{T_{10}^{\,4} - T_{11}^{\,4}}{\left(\frac{1-\varepsilon_{stl}}{\varepsilon_{stl}}\right) + \frac{1}{F_{10,11}} + \left(\frac{1-\varepsilon_{stl}}{\varepsilon_{stl}}\right)} - \frac{\sigma}{k_{stl}\cdot t}\cdot\frac{T_{10}^{\,4} - T_{12}^{\,4}}{\left(\frac{1-\varepsilon_{stl}}{\varepsilon_{stl}}\right) + \frac{1}{F_{10,12}} + \left(\frac{1-\varepsilon_{stl}}{\varepsilon_{stl}}\right)} - \frac{q_{cool_{10}}}{\pi k_{stl}\cdot D\cdot t\cdot 3}$$

ARES CORPORATION	CALCULATION SHEET		
Project No. 0509206.01	Calculation No. 0509206.01-M-004	Rev. No. 1	Page No. 92 of 159
Title: DBVS AWTE Thermal Load Inventory			
Prepared By: P.S. Lowery	Date: 2.14.06	Checked By: S.R. Pierce	Date: 2.15.06

DBVS AWTE Feed Chute Thermal Load Calc

$$\frac{T_{12} - 2 \cdot T_{11} + T_{10}}{s^2} \ldots = 0$$

$$+ 0 - \frac{\xi v}{k_{stl} \cdot t} \left[\left(\left| T_{11} - T_{111} \right| \right)^{\frac{1}{3}} \cdot \left(T_{11} - T_{111} \right) + \left(\left| T_{11} - T_{room} \right| \right)^{\frac{1}{3}} \cdot \left(T_{11} - T_{room} \right) \right] \ldots$$

$$+ 0 - \frac{\sigma \cdot \varepsilon_{stl}}{k_{stl} \cdot t} \left(T_{11}^{\ 4} - T_{room}^{\ 4} \right) - \frac{\sigma}{k_{stl} \cdot t} \cdot \frac{T_{11}^{\ 4} - T_8^{\ 4}}{\left(\frac{1 - \varepsilon_{stl}}{\varepsilon_{stl}} \right) + \frac{1}{F_{11,8}} + \left(\frac{1 - \varepsilon_{stl}}{\varepsilon_{stl}} \right)} \ldots$$

$$+ 0 - \frac{\sigma}{k_{stl} \cdot t} \cdot \frac{T_{11}^{\ 4} - T_9^{\ 4}}{\left(\frac{1 - \varepsilon_{stl}}{\varepsilon_{stl}} \right) + \frac{1}{F_{11,9}} + \left(\frac{1 - \varepsilon_{stl}}{\varepsilon_{stl}} \right)} - \frac{\sigma}{k_{stl} \cdot t} \cdot \frac{T_{11}^{\ 4} - T_{10}^{\ 4}}{\left(\frac{1 - \varepsilon_{stl}}{\varepsilon_{stl}} \right) + \frac{1}{F_{11,10}} + \left(\frac{1 - \varepsilon_{stl}}{\varepsilon_{stl}} \right)} \ldots$$

$$+ 0 - \frac{\sigma}{k_{stl} \cdot t} \cdot \frac{T_{11}^{\ 4} - T_{12}^{\ 4}}{\left(\frac{1 - \varepsilon_{stl}}{\varepsilon_{stl}} \right) + \frac{1}{F_{11,12}} + \left(\frac{1 - \varepsilon_{stl}}{\varepsilon_{stl}} \right)} - \frac{q_{cool_{11}}}{\pi k_{stl} \cdot D \cdot t \cdot \delta}$$

$$\frac{T_{12} - T_{11}}{s^2} \ldots = 0$$

$$+ 0 - \frac{\xi v}{k_{stl} \cdot t} \left[\left(\left| T_{12} - T_{112} \right| \right)^{\frac{1}{3}} \cdot \left(T_{12} - T_{112} \right) + \left(\left| T_{12} - T_{room} \right| \right)^{\frac{1}{3}} \cdot \left(T_{12} - T_{room} \right) \right] \ldots$$

$$+ 0 - \frac{\sigma \cdot \varepsilon_{stl}}{k_{stl} \cdot t} \left(T_{12}^{\ 4} - T_{room}^{\ 4} \right) - \frac{\sigma}{k_{stl} \cdot t} \cdot \frac{T_{12}^{\ 4} - T_9^{\ 4}}{\left(\frac{1 - \varepsilon_{stl}}{\varepsilon_{stl}} \right) + \frac{1}{F_{12,9}} + \left(\frac{1 - \varepsilon_{stl}}{\varepsilon_{stl}} \right)} \ldots$$

$$+ 0 - \frac{\sigma}{k_{stl} \cdot t} \cdot \frac{T_{12}^{\ 4} - T_{10}^{\ 4}}{\left(\frac{1 - \varepsilon_{stl}}{\varepsilon_{stl}} \right) + \frac{1}{F_{12,10}} + \left(\frac{1 - \varepsilon_{stl}}{\varepsilon_{stl}} \right)} - \frac{\sigma}{k_{stl} \cdot t} \cdot \frac{T_{12}^{\ 4} - T_{11}^{\ 4}}{\left(\frac{1 - \varepsilon_{stl}}{\varepsilon_{stl}} \right) + \frac{1}{F_{12,11}} + \left(\frac{1 - \varepsilon_{stl}}{\varepsilon_{stl}} \right)} - \frac{q_{cool_{12}}}{\pi k_{stl} \cdot D \cdot t \cdot \delta}$$

CALCULATION SHEET

Project No. 0509206.01	Calculation No. 0509206.01-M-004	Rev. No. 1	Page No. 93 of 159
Title: DBVS AWTE Thermal Load Inventory			
Prepared By: P.S. Lowery	Date: 2.14.06	Checked By: S.R. Pierce	Date: 2.15.06

DBVS AWTE Feed Chute Thermal Load Calc

Now define the energy equations for the air column elements ...

$$\frac{T_{102} - 2\cdot T_{101} + T_0}{\delta^2} - \frac{4\cdot \xi_V}{k_A\cdot D}\cdot\left(\left|T_{101} - T_1\right|\right)^{\frac{1}{3}}\cdot\left(T_{101} - T_1\right) - \frac{4m_{dot}\cdot C_P}{\pi\cdot k_A\cdot D^2\cdot\delta}\cdot\left(T_{101} - T_0\right) = 0$$

$$\frac{T_{103} - 2\cdot T_{102} + T_{101}}{\delta^2} - \frac{4\cdot \xi_V}{k_A\cdot D}\cdot\left(\left|T_{102} - T_2\right|\right)^{\frac{1}{3}}\cdot\left(T_{102} - T_2\right) - \frac{4m_{dot}\cdot C_P}{\pi\cdot k_A\cdot D^2\cdot\delta}\cdot\left(T_{102} - T_{101}\right) = 0$$

$$\frac{T_{104} - 2\cdot T_{103} + T_{102}}{\delta^2} - \frac{4\cdot \xi_V}{k_A\cdot D}\cdot\left(\left|T_{103} - T_3\right|\right)^{\frac{1}{3}}\cdot\left(T_{103} - T_3\right) - \frac{4m_{dot}\cdot C_P}{\pi\cdot k_A\cdot D^2\cdot\delta}\cdot\left(T_{103} - T_{102}\right) = 0$$

$$\frac{T_{105} - 2\cdot T_{104} + T_{103}}{\delta^2} - \frac{4\cdot \xi_V}{k_A\cdot D}\cdot\left(\left|T_{104} - T_4\right|\right)^{\frac{1}{3}}\cdot\left(T_{104} - T_4\right) - \frac{4m_{dot}\cdot C_P}{\pi\cdot k_A\cdot D^2\cdot\delta}\cdot\left(T_{104} - T_{103}\right) = 0$$

$$\frac{T_{106} - 2\cdot T_{105} + T_{104}}{\delta^2} - \frac{4\cdot \xi_V}{k_A\cdot D}\cdot\left(\left|T_{105} - T_5\right|\right)^{\frac{1}{3}}\cdot\left(T_{105} - T_5\right) - \frac{4m_{dot}\cdot C_P}{\pi\cdot k_A\cdot D^2\cdot\delta}\cdot\left(T_{105} - T_{104}\right) = 0$$

$$\frac{T_{107} - 2\cdot T_{106} + T_{105}}{\delta^2} - \frac{4\cdot \xi_V}{k_A\cdot D}\cdot\left(\left|T_{106} - T_6\right|\right)^{\frac{1}{3}}\cdot\left(T_{106} - T_6\right) - \frac{4m_{dot}\cdot C_P}{\pi\cdot k_A\cdot D^2\cdot\delta}\cdot\left(T_{106} - T_{105}\right) = 0$$

$$\frac{T_{108} - 2\cdot T_{107} + T_{106}}{\delta^2} - \frac{4\cdot \xi_V}{k_A\cdot D}\cdot\left(\left|T_{107} - T_7\right|\right)^{\frac{1}{3}}\cdot\left(T_{107} - T_7\right) - \frac{4m_{dot}\cdot C_P}{\pi\cdot k_A\cdot D^2\cdot\delta}\cdot\left(T_{107} - T_{106}\right) = 0$$

$$\frac{T_{109} - 2\cdot T_{108} + T_{107}}{\delta^2} - \frac{4\cdot \xi_V}{k_A\cdot D}\cdot\left(\left|T_{108} - T_8\right|\right)^{\frac{1}{3}}\cdot\left(T_{108} - T_8\right) - \frac{4m_{dot}\cdot C_P}{\pi\cdot k_A\cdot D^2\cdot\delta}\cdot\left(T_{108} - T_{107}\right) = 0$$

$$\frac{T_{110} - 2\cdot T_{109} + T_{108}}{\delta^2} - \frac{4\cdot \xi_V}{k_A\cdot D}\cdot\left(\left|T_{109} - T_9\right|\right)^{\frac{1}{3}}\cdot\left(T_{109} - T_9\right) - \frac{4m_{dot}\cdot C_P}{\pi\cdot k_A\cdot D^2\cdot\delta}\cdot\left(T_{109} - T_{108}\right) = 0$$

CALCULATION SHEET

Project No. 0509206.01	Calculation No. 0509206.01-M-004	Rev. No. 1	Page No. 94 of 159
Title: DBVS AWTE Thermal Load Inventory			
Prepared By: P.S. Lowery	Date: 2.14.06	Checked By: S.R. Pierce	Date: 2.15.06

DBVS AWTE Feed Chute Thermal Load Calc

$$\frac{T_{111} - 2\cdot T_{110} + T_{109}}{\delta^2} - \frac{4\cdot \xi_V}{k_A\cdot D}\cdot\left(\left|T_{110} - T_{10}\right|\right)^{\frac{1}{3}}\cdot\left(T_{110} - T_{10}\right) - \frac{4\cdot m_{dot}\cdot C_P}{\pi\cdot k_A\cdot D^2\cdot\delta}\cdot\left(T_{110} - T_{109}\right) = 0$$

$$\frac{T_{112} - 2\cdot T_{111} + T_{110}}{\delta^2} - \frac{4\cdot \xi_V}{k_A\cdot D}\cdot\left(\left|T_{111} - T_{11}\right|\right)^{\frac{1}{3}}\cdot\left(T_{111} - T_{11}\right) - \frac{4\cdot m_{dot}\cdot C_P}{\pi\cdot k_A\cdot D^2\cdot\delta}\cdot\left(T_{111} - T_{110}\right) = 0$$

$$\frac{T_{112} - T_{111}}{\delta^2} + \frac{4\cdot \xi_V}{k_A\cdot D}\cdot\left(\left|T_{112} - T_{12}\right|\right)^{\frac{1}{3}}\cdot\left(T_{112} - T_{12}\right) - \frac{4\cdot m_{dot}\cdot C_P}{\pi\cdot k_A\cdot D^2\cdot\delta}\cdot\left(T_{112} - T_{111}\right) = 0$$

$$\begin{pmatrix} T1 \\ T2 \\ T3 \\ T4 \\ T5 \\ T6 \\ T7 \\ T8 \\ T9 \\ T10 \\ T11 \\ T12 \\ T101 \\ T102 \\ T103 \\ T104 \\ T105 \\ T106 \\ T107 \\ T108 \\ T109 \\ T110 \\ T111 \\ T112 \end{pmatrix} := \mathrm{Find}(T_1, T_2, T_3, T_4, T_5, T_6, T_7, T_8, T_9, T_{10}, T_{11}, T_{12}, T_{101}, T_{102}, T_{103}, T_{104}, T_{105}, T_{106}, T_{107}, T_{108}, T_{109}, T$$

Page 12

CALCULATION SHEET

Project No. 0509206.01	Calculation No. 0509206.01-M-004	Rev. No. 1	Page No. 95 of 159
Title: DBVS AWTE Thermal Load Inventory			
Prepared By: P.S. Lowery	Date: 2.14.06	Checked By: S.R. Pierce	Date: 2.15.06

DBVS AWTE Feed Chute Thermal Load Calc

Temperatures for the steel chute are ...

T1 = 520.042 K	T1C := KtoC(T1)	T1C = 246.892
T2 = 491.288 K	T2C := KtoC(T2)	T2C = 218.138
T3 = 458.271 K	T3C := KtoC(T3)	T3C = 185.121
T4 = 450.117 K	T4C := KtoC(T4)	T4C = 176.967
T5 = 446.192 K	T5C := KtoC(T5)	T5C = 173.042
T6 = 443.686 K	T6C := KtoC(T6)	T6C = 170.536
T7 = 442.81 K	T7C := KtoC(T7)	T7C = 169.66
T8 = 442.122 K	T8C := KtoC(T8)	T8C = 168.972
T9 = 441.468 K	T9C := KtoC(T9)	T9C = 168.318
T10 = 440.838 K	T10C := KtoC(T10)	T10C = 167.688
T11 = 440.317 K	T11C := KtoC(T11)	T11C = 167.167
T12 = 440.818 K	T12C := KtoC(T12)	T12C = 167.668

Temperature for the air column inside the chute are ...

T101 = 739.969 K	T101C := KtoC(T101)	T101C = 466.819
T102 = 738.202 K	T102C := KtoC(T102)	T102C = 465.052
T103 = 736.134 K	T103C := KtoC(T103)	T103C = 462.984
T104 = 734.006 K	T104C := KtoC(T104)	T104C = 460.856
T105 = 731.859 K	T105C := KtoC(T105)	T105C = 458.709
T106 = 729.71 K	T106C := KtoC(T106)	T106C = 456.56
T107 = 727.573 K	T107C := KtoC(T107)	T107C = 454.423
T108 = 725.45 K	T108C := KtoC(T108)	T108C = 452.3
T109 = 723.342 K	T109C := KtoC(T109)	T109C = 450.192
T110 = 721.248 K	T110C := KtoC(T110)	T110C = 448.098
T111 = 719.17 K	T111C := KtoC(T111)	T111C = 446.02
T112 = 721.264 K	T112C := KtoC(T112)	T112C = 448.114

ARES CORPORATION	**CALCULATION SHEET**		
Project No. 0509206.01	Calculation No. 0509206.01-M-004	Rev. No. 1	Page No. 96 of 159
Title: DBVS AWTE Thermal Load Inventory			
Prepared By: P.S. Lowery	Date: 2.14.06	Checked By: S.R. Pierce	Date: 2.15.06

DBVS AWTE Feed Cable Thermal Load Calc

$$T_{plot} := \begin{pmatrix} T1C \\ T2C \\ T3C \\ T4C \\ T5C \\ T6C \\ T7C \\ T8C \\ T9C \\ T10C \\ T11C \\ T12C \end{pmatrix} \qquad zplot := \begin{pmatrix} 0.5 \\ 1.5 \\ 2.5 \\ 3.5 \\ 4.5 \\ 5.5 \\ 6.5 \\ 7.5 \\ 8.5 \\ 9.5 \\ 10.5 \\ 11.5 \end{pmatrix}$$

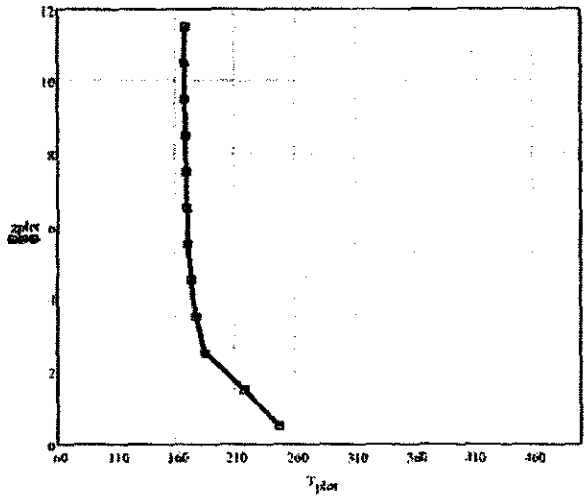

Page 14

ARES CORPORATION	CALCULATION SHEET		
Project No. 0509206.01	Calculation No. 0509206.01-M-004	Rev. No. 1	Page No. 97 of 159
Title: DBVS AWTE Thermal Load Inventory			
Prepared By: P.S. Lowery	Date: 2.14.06	Checked By: S.R. Pierce	Date: 2.15.06

DBVS AWTE Feed Chute Thermal Load Calc

Now compute the heat loss from the chute to the AWTE room ...

$$Q := \begin{bmatrix} \pi \cdot D \cdot \delta \left[\xi_V \left(\left| T1 - T_{room} \right| \right)^{\frac{1}{3}} \cdot \left(T1 - T_{room} \right) + \sigma \cdot \epsilon_{stl} \left(T1^4 - T_{room}^4 \right) \right] \\ \pi \cdot D \cdot \delta \left[\xi_V \left(\left| T2 - T_{room} \right| \right)^{\frac{1}{3}} \cdot \left(T2 - T_{room} \right) + \sigma \cdot \epsilon_{stl} \left(T2^4 - T_{room}^4 \right) \right] \\ \pi \cdot D \cdot \delta \left[\xi_V \left(\left| T3 - T_{room} \right| \right)^{\frac{1}{3}} \cdot \left(T3 - T_{room} \right) + \sigma \cdot \epsilon_{stl} \left(T3^4 - T_{room}^4 \right) \right] \\ \pi \cdot D \cdot \delta \left[\xi_V \left(\left| T4 - T_{room} \right| \right)^{\frac{1}{3}} \cdot \left(T4 - T_{room} \right) + \sigma \cdot \epsilon_{stl} \left(T4^4 - T_{room}^4 \right) \right] \\ \pi \cdot D \cdot \delta \left[\xi_V \left(\left| T5 - T_{room} \right| \right)^{\frac{1}{3}} \cdot \left(T5 - T_{room} \right) + \sigma \cdot \epsilon_{stl} \left(T5^4 - T_{room}^4 \right) \right] \\ \pi \cdot D \cdot \delta \left[\xi_V \left(\left| T6 - T_{room} \right| \right)^{\frac{1}{3}} \cdot \left(T6 - T_{room} \right) + \sigma \cdot \epsilon_{stl} \left(T6^4 - T_{room}^4 \right) \right] \\ \pi \cdot D \cdot \delta \left[\xi_V \left(\left| T7 - T_{room} \right| \right)^{\frac{1}{3}} \cdot \left(T7 - T_{room} \right) + \sigma \cdot \epsilon_{stl} \left(T7^4 - T_{room}^4 \right) \right] \\ \pi \cdot D \cdot \delta \left[\xi_V \left(\left| T8 - T_{room} \right| \right)^{\frac{1}{3}} \cdot \left(T8 - T_{room} \right) + \sigma \cdot \epsilon_{stl} \left(T8^4 - T_{room}^4 \right) \right] \\ \pi \cdot D \cdot \delta \left[\xi_V \left(\left| T9 - T_{room} \right| \right)^{\frac{1}{3}} \cdot \left(T9 - T_{room} \right) + \sigma \cdot \epsilon_{stl} \left(T9^4 - T_{room}^4 \right) \right] \\ \pi \cdot D \cdot \delta \left[\xi_V \left(\left| T10 - T_{room} \right| \right)^{\frac{1}{3}} \cdot \left(T10 - T_{room} \right) + \sigma \cdot \epsilon_{stl} \left(T10^4 - T_{room}^4 \right) \right] \\ \pi \cdot D \cdot \delta \left[\xi_V \left(\left| T11 - T_{room} \right| \right)^{\frac{1}{3}} \cdot \left(T11 - T_{room} \right) + \sigma \cdot \epsilon_{stl} \left(T11^4 - T_{room}^4 \right) \right] \\ \pi \cdot D \cdot \delta \left[\xi_V \left(\left| T12 - T_{room} \right| \right)^{\frac{1}{3}} \cdot \left(T12 - T_{room} \right) + \sigma \cdot \epsilon_{stl} \left(T12^4 - T_{room}^4 \right) \right] \end{bmatrix}$$

CALCULATION SHEET

Project No. 0509206.01	Calculation No. 0509206.01-M-004	Rev. No. 1	Page No. 98 of 159
Title: DBVS AWTE Thermal Load Inventory			
Prepared By: P.S. Lowery	Date: 2.14.06	Checked By: S.R. Pierce	Date: 2.15.06

DBVS AWTE Feed Chiller Thermal Load Calc

Q =

n	1
1	558.799
2	758.943
3	562.816
4	519.125
5	488.729
6	486.929
7	481.489
8	478.013
9	474.725
10	471.566
11	468.965
12	471.47

W

Compute the total heat load to the AWTE room ...

$$Q_{room} = \sum_{n=1}^{12} Q_n \qquad Q_{room} = 6.629\,kW$$

ARES CORPORATION	CALCULATION SHEET		
Project No. 0509206.01	Calculation No. 0509206.01-M-004	Rev. No. 1	Page No. 99 of 159
Title: DBVS AWTE Thermal Load Inventory			
Prepared By: P.S. Lowery	Date: 2.14.06	Checked By: S.R. Pierce	Date: 2.15.06

COOLED CHUTE CASE (without chimney effect)

A.R.E.S. CORPORATION	CALCULATION SHEET		
Project No. 0509206.01	Calculation No. 0509206.01-M-004	Rev. No. 1	Page No. 100 of 159
Title: DBVS AWTE Thermal Load Inventory			
Prepared By: P.S. Lowery	Date: 2.14.06	Checked By: S.R. Pierce	Date: 2.15.06

DBVS AWTE Feed Chute Thermal Load Calc

°C = 1 °F = 1

$KtoC(x) := \left(\frac{x}{K} - 273.15\right)$ $FtoC(x) := \frac{5}{9}\left(\frac{x}{°F} - 32\right)$

ORIGIN = 1

Model Parameters:

$\sigma := 5.67 \cdot 10^{-8} \frac{W}{m^2 \cdot K^4}$

$k_{std} := 60.5 \frac{W}{m \cdot K}$

$D := 8in$ $t := 0.148in$ $L_{chute} := 12ft$ $\delta_{chute} := 12in$

$\varepsilon_{std} := 0.85$

$\varepsilon_M := 0.7$ $A_M := \frac{(22ft) \cdot (5.5ft)}{\pi \cdot D \cdot \delta}$ $A_M = 51.373$ $T_M := (1050 + 273.15)K$ Melt Top Surface Temperature

Natural Convection Heat Transfer Coefficient Correlation Parameters

Natural convection heat transfer coefficients are modeled using correlations from Holman, Heat Transfer, 3rd Edition, p. 219. They are of the form ...

$h = \xi_o (\Delta T)^{1/3}$

where the correlation parameter, ξ_o, reflects the shape and orientation of the surface (the subscript "o" indicates the orientation – e.g., V -> vertical, HU -> horizontal, heated surface facing up, and so on).

$\xi_V := 1.32 \frac{W}{m^2 \cdot \sqrt[3]{K^4}}$ $\xi_{HU} := 1.52 \frac{W}{m^2 \cdot \sqrt[3]{K^4}}$

$T_0 := (FtoC(875°F) + 273.15)K$ Temperature at the base of the portion of the chute "exposed" to the off-gas plenum region

$T_{wall} := (570 + 273.15)K$ Temperature used to represent the O/G wall temperatures for the purposes of radiant heat transfer from the electrode surface

$T_{OG} := (FtoC(875°F) + 273.15)K$ Temperature of the off-gas plenum gases

$T_A := (570 + 273.15)K$ Temperature of the air space between the O/G hood and the AWTE floor

$T_{room} := (FtoC(77°F) + 273.15)K$ Temperature of the AWTE room and the associated internal equipment & structures

Nodes 1 thru 12 represent the steel chute
Node 101 thru 112 represent the air column within the steel chute

Load matrix of view factors, F

$F_{1M} := 0.151$ $F_{2M} := 0.001$ $F_{3M} := 0.002$ $F_{4M} := 0.001$ $F_{5M} := 0.0001$ View factors from the cylindrical segments to the melt surface

Page 1

A.R.E.S. CORPORATION	CALCULATION SHEET		
Project No. 0509206.01	Calculation No. 0509206.01-M-004	Rev. No. 1	Page No. 101 of 159
Title: DBVS AWTE Thermal Load Inventory			
Prepared By: P.S. Lowery	Date: 2.14.06	Checked By: S.R. Pierce	Date: 2.15.06

DBVS AWTE Feed Chute Thermal Load Calc

Model the fluid as air

Properties at 875°F are ... $\rho_A := 0.5043 \frac{kg}{m^3}$ $k_A := 0.040 \frac{W}{m \cdot K}$ $C_p := 1080 \frac{J}{kg \cdot K}$

No chimney effect in this model so ...

$$m_{dot} := 0 \frac{kg}{sec}$$

Page 2

CALCULATION SHEET

Project No. 0509206.01	Calculation No. 0509206.01-M-004	Rev. No. 1	Page No. 102 of 159
Title: DBVS AWTE Thermal Load Inventory			
Prepared By: P.S. Lowery	Date: 2.14.06	Checked By: S.R. Pierce	Date: 2.15.06

DBVS AWTE Feed Chute Thermal Load Calc

$$E_{ij} := \begin{pmatrix} 0.697 & 0.140 & 0.009 & 0.002 & 0 & 0 & 0 & 0 & 0 & 0 & 0 & 0 \\ 0.140 & 0.697 & 0.140 & 0.009 & 0.002 & 0 & 0 & 0 & 0 & 0 & 0 & 0 \\ 0.009 & 0.140 & 0.697 & 0.140 & 0.009 & 0.002 & 0 & 0 & 0 & 0 & 0 & 0 \\ 0.002 & 0.009 & 0.140 & 0.697 & 0.140 & 0.009 & 0.002 & 0 & 0 & 0 & 0 & 0 \\ 0 & 0.002 & 0.009 & 0.140 & 0.697 & 0.140 & 0.009 & 0.002 & 0 & 0 & 0 & 0 \\ 0 & 0 & 0.002 & 0.009 & 0.140 & 0.697 & 0.140 & 0.009 & 0.002 & 0 & 0 & 0 \\ 0 & 0 & 0 & 0.002 & 0.009 & 0.140 & 0.697 & 0.140 & 0.009 & 0.002 & 0 & 0 \\ 0 & 0 & 0 & 0 & 0.002 & 0.009 & 0.140 & 0.697 & 0.140 & 0.009 & 0.002 & 0 \\ 0 & 0 & 0 & 0 & 0 & 0.002 & 0.009 & 0.140 & 0.697 & 0.140 & 0.009 & 0.002 \\ 0 & 0 & 0 & 0 & 0 & 0 & 0.002 & 0.009 & 0.140 & 0.697 & 0.140 & 0.009 \\ 0 & 0 & 0 & 0 & 0 & 0 & 0 & 0.002 & 0.009 & 0.140 & 0.697 & 0.140 \\ 0 & 0 & 0 & 0 & 0 & 0 & 0 & 0 & 0.002 & 0.009 & 0.140 & 0.697 \end{pmatrix}$$

iew factors from a
ylindrical segment to its
eighboring cylindrical
egments. For example,
$_{1,3}$ is the view factor from
gement 1 in the model to
gment 3,
$_{1,3}=F_{3,1}=0.009$

F =

	1	2	3	4	5	6	7	8	9	10	11	12
1	0.697	0.14	0.009	0.002	0	0	0	0	0	0	0	0
2	0.14	0.697	0.14	0.009	0.002	0	0	0	0	0	0	0
3	0.009	0.14	0.697	0.14	0.009	0.002	0	0	0	0	0	0
4	0.002	0.009	0.14	0.697	0.14	0.009	0.002	0	0	0	0	0
5	0	0.002	0.009	0.14	0.697	0.14	0.009	0.002	0	0	0	0
6	0	0	0.002	0.009	0.14	0.697	0.14	0.009	0.002	0	0	0
7	0	0	0	0.002	0.009	0.14	0.697	0.14	0.009	0.002	0	0
8	0	0	0	0	0.002	0.009	0.14	0.697	0.14	0.009	0.002	0
9	0	0	0	0	0	0.002	0.009	0.14	0.697	0.14	0.009	0.002
10	0	0	0	0	0	0	0.002	0.009	0.14	0.697	0.14	0.009
11	0	0	0	0	0	0	0	0.002	0.009	0.14	0.697	0.14
12	0	0	0	0	0	0	0	0	0.002	0.009	0.14	0.697

Initial guess for temperature d istribution .

$T_1 := (600 + 273.15)K$ $T_{101} := (600 + 273.15)K$

$T_2 := (600 + 273.15)K$ $T_{102} := (600 + 273.15)K$

$T_3 := (600 + 273.15)K$ $T_{103} := (600 + 273.15)K$

$T_4 := (600 + 273.15)K$ $T_{104} := (600 + 273.15)K$

$T_5 := (600 + 273.15)K$ $T_{105} := (600 + 273.15)K$

$T_6 := (600 + 273.15)K$ $T_{106} := (600 + 273.15)K$

$T_7 := (600 + 273.15)K$ $T_{107} := (600 + 273.15)K$

$T_8 := (600 + 273.15)K$ $T_{108} := (600 + 273.15)K$

$T_9 := (600 + 273.15)K$ $T_{109} := (600 + 273.15)K$

$T_{10} := (600 + 273.15)K$ $T_{110} := (600 + 273.15)K$

$T_{11} := (600 + 273.15)K$ $T_{111} := (600 + 273.15)K$

$T_{12} := (600 + 273.15)K$ $T_{112} := (600 + 273.15)K$

Page 3

ARES CORPORATION	CALCULATION SHEET		
Project No. 0509206.01	Calculation No. 0509206.01-M-004	Rev. No. 1	Page No. 103 of 159
Title: DBVS AWTE Thermal Load Inventory			
Prepared By: P.S. Lowery	Date: 2.14.06	Checked By: S.R. Pierce	Date: 2.15.06

DBVS AWTE Feed Chute Thermal Load Calc

Set-up a vector of heat sink values for direct cooling of each of the 12 segments used to model the chute. This energy will be removed directly from its associated chute segment in the model. For example, An entry of x in vector element $q_{cool}[5]$ will remove x Watts of from that segment.

$$q_{cool} := \begin{pmatrix} 4000W \\ 0W \\ 0W \\ 0W \\ 0W \\ 0W \\ 0W \\ 0W \\ 0W \\ 0W \\ 0W \\ 0W \end{pmatrix}$$

Page 4

CALCULATION SHEET

Project No. 0509206.01	Calculation No. 0509206.01-M-004	Rev. No. 1	Page No. 104 of 159
Title: DBVS AWTE Thermal Load Inventory			
Prepared By: P.S. Lowery	Date: 2.14.06	Checked By: S.R. Pierce	Date: 2.15.06

DBVS AWTE Feed Chute Thermal Load Calc

Given

First define the energy balance equations for the steel chute elements ...

$$\frac{T_2 - 2\cdot T_1 + T_0}{\delta^2} - \frac{\xi_V}{k_{stl}\cdot t}\left[\left(\left|T_1 - T_{101}\right|\right)^{\frac{1}{3}}\cdot\left(T_1 - T_{101}\right) + \left(\left|T_1 - T_{room}\right|\right)^{\frac{1}{3}}\cdot\left(T_1 - T_{room}\right)\right] \ldots = 0$$

$$+ 0 - \frac{\sigma\cdot\varepsilon_{stl}}{k_{stl}\cdot t}\left(T_1^{\,4} - T_{room}^{\,4}\right) - \frac{\sigma}{k_{stl}\cdot t}\cdot\frac{T_1^{\,4} - T_M^{\,4}}{\left(\frac{1-\varepsilon_{stl}}{\varepsilon_{stl}}\right) + \frac{1}{F_{1M}} + \left(\frac{1-\varepsilon_M}{\varepsilon_M\cdot A_M}\right)} \ldots$$

$$+ 0 - \frac{\sigma}{k_{stl}\cdot t}\cdot\frac{T_1^{\,4} - T_2^{\,4}}{\left(\frac{1-\varepsilon_{stl}}{\varepsilon_{stl}}\right) + \frac{1}{F_{1,2}} + \left(\frac{1-\varepsilon_{stl}}{\varepsilon_{stl}}\right)} - \frac{\sigma}{k_{stl}\cdot t}\cdot\frac{T_1^{\,4} - T_3^{\,4}}{\left(\frac{1-\varepsilon_{stl}}{\varepsilon_{stl}}\right) + \frac{1}{F_{1,3}} + \left(\frac{1-\varepsilon_{stl}}{\varepsilon_{stl}}\right)} \ldots$$

$$+ 0 - \frac{\sigma}{k_{stl}\cdot t}\cdot\frac{T_1^{\,4} - T_4^{\,4}}{\left(\frac{1-\varepsilon_{stl}}{\varepsilon_{stl}}\right) + \frac{1}{F_{1,4}} + \left(\frac{1-\varepsilon_{stl}}{\varepsilon_{stl}}\right)} - \frac{q_{cool_1}}{\pi k_{stl}\cdot D\cdot t\cdot\delta}$$

$$\frac{T_3 - 2\cdot T_2 + T_1}{\delta^2} - \frac{\xi_V}{k_{stl}\cdot t}\left[\left(\left|T_2 - T_{102}\right|\right)^{\frac{1}{3}}\cdot\left(T_2 - T_{102}\right) + \left(\left|T_2 - T_{room}\right|\right)^{\frac{1}{3}}\cdot\left(T_2 - T_{room}\right)\right] \ldots = 0$$

$$+ 0 - \frac{\sigma\cdot\varepsilon_{stl}}{k_{stl}\cdot t}\left(T_2^{\,4} - T_{room}^{\,4}\right) - \frac{\sigma}{k_{stl}\cdot t}\cdot\frac{T_2^{\,4} - T_M^{\,4}}{\left(\frac{1-\varepsilon_{stl}}{\varepsilon_{stl}}\right) + \frac{1}{F_{2M}} + \left(\frac{1-\varepsilon_M}{\varepsilon_M\cdot A_M}\right)} \ldots$$

$$+ 0 - \frac{\sigma}{k_{stl}\cdot t}\cdot\frac{T_2^{\,4} - T_1^{\,4}}{\left(\frac{1-\varepsilon_{stl}}{\varepsilon_{stl}}\right) + \frac{1}{F_{2,1}} + \left(\frac{1-\varepsilon_{stl}}{\varepsilon_{stl}}\right)} - \frac{\sigma}{k_{stl}\cdot t}\cdot\frac{T_2^{\,4} - T_3^{\,4}}{\left(\frac{1-\varepsilon_{stl}}{\varepsilon_{stl}}\right) + \frac{1}{F_{2,3}} + \left(\frac{1-\varepsilon_{stl}}{\varepsilon_{stl}}\right)} \ldots$$

$$+ 0 - \frac{\sigma}{k_{stl}\cdot t}\cdot\frac{T_2^{\,4} - T_4^{\,4}}{\left(\frac{1-\varepsilon_{stl}}{\varepsilon_{stl}}\right) + \frac{1}{F_{2,4}} + \left(\frac{1-\varepsilon_{stl}}{\varepsilon_{stl}}\right)} - \frac{\sigma}{k_{stl}\cdot t}\cdot\frac{T_2^{\,4} - T_5^{\,4}}{\left(\frac{1-\varepsilon_{stl}}{\varepsilon_{stl}}\right) + \frac{1}{F_{2,5}} + \left(\frac{1-\varepsilon_{stl}}{\varepsilon_{stl}}\right)} - \frac{q_{cool_2}}{\pi k_{stl}\cdot D\cdot t\cdot\delta}$$

Page 5

ARES CORPORATION	CALCULATION SHEET		
Project No. 0509206.01	Calculation No. 0509206.01-M-004	Rev. No. 1	Page No. 105 of 159
Title: DBVS AWTE Thermal Load Inventory			
Prepared By: P.S. Lowery	Date: 2.14.06	Checked By: S.R. Pierce	Date: 2.15.06

DBVS AWTE Feed Chute Thermal Load Calc

$$\frac{T_4 - 2\cdot T_3 + T_2}{s^2} - \frac{\xi_V}{k_{stl}\cdot t}\left[\left(\left|T_3 - T_{103}\right|\right)^{\frac{1}{3}}\cdot\left(T_3 - T_{103}\right) + \left(\left|T_3 - T_{room}\right|\right)^{\frac{1}{3}}\cdot\left(T_3 - T_{room}\right)\right] \ldots = 0$$

$$+0 - \frac{\sigma\cdot\varepsilon_{stl}}{k_{stl}\cdot t}\left(T_3^{\,4} - T_{room}^{\,4}\right) - \frac{\sigma}{k_{stl}\cdot t}\cdot\frac{T_3^{\,4} - T_M^{\,4}}{\left(\frac{1-\varepsilon_{stl}}{\varepsilon_{stl}}\right) + \frac{1}{F_{3M}} + \left(\frac{1-\varepsilon_M}{\varepsilon_M\cdot A_M}\right)} \ldots$$

$$+0 - \frac{\sigma}{k_{stl}\cdot t}\cdot\frac{T_3^{\,4} - T_1^{\,4}}{\left(\frac{1-\varepsilon_{stl}}{\varepsilon_{stl}}\right) + \frac{1}{F_{3,1}} + \left(\frac{1-\varepsilon_{stl}}{\varepsilon_{stl}}\right)} - \frac{\sigma}{k_{stl}\cdot t}\cdot\frac{T_3^{\,4} - T_2^{\,4}}{\left(\frac{1-\varepsilon_{stl}}{\varepsilon_{stl}}\right) + \frac{1}{F_{3,2}} + \left(\frac{1-\varepsilon_{stl}}{\varepsilon_{stl}}\right)} \ldots$$

$$+0 - \frac{\sigma}{k_{stl}\cdot t}\cdot\frac{T_3^{\,4} - T_4^{\,4}}{\left(\frac{1-\varepsilon_{stl}}{\varepsilon_{stl}}\right) + \frac{1}{F_{3,4}} + \left(\frac{1-\varepsilon_{stl}}{\varepsilon_{stl}}\right)} - \frac{\sigma}{k_{stl}\cdot t}\cdot\frac{T_3^{\,4} - T_5^{\,4}}{\left(\frac{1-\varepsilon_{stl}}{\varepsilon_{stl}}\right) + \frac{1}{F_{3,5}} + \left(\frac{1-\varepsilon_{stl}}{\varepsilon_{stl}}\right)} \ldots$$

$$+0 - \frac{\sigma}{k_{stl}\cdot t}\cdot\frac{T_3^{\,4} - T_6^{\,4}}{\left(\frac{1-\varepsilon_{stl}}{\varepsilon_{stl}}\right) + \frac{1}{F_{3,6}} + \left(\frac{1-\varepsilon_{stl}}{\varepsilon_{stl}}\right)} - \frac{q_{cool_3}}{\pi k_{stl}\cdot D\cdot t\cdot\delta}$$

$$\frac{T_5 - 2\cdot T_4 + T_3}{s^2} - \frac{\xi_V}{k_{stl}\cdot t}\left[\left(\left|T_4 - T_{104}\right|\right)^{\frac{1}{3}}\cdot\left(T_4 - T_{104}\right) + \left(\left|T_4 - T_{room}\right|\right)^{\frac{1}{3}}\cdot\left(T_4 - T_{room}\right)\right] \ldots = 0$$

$$+0 - \frac{\sigma\cdot\varepsilon_{stl}}{k_{stl}\cdot t}\left(T_4^{\,4} - T_{room}^{\,4}\right) - \frac{\sigma}{k_{stl}\cdot t}\cdot\frac{T_4^{\,4} - T_M^{\,4}}{\left(\frac{1-\varepsilon_{stl}}{\varepsilon_{stl}}\right) + \frac{1}{F_{4M}} + \left(\frac{1-\varepsilon_M}{\varepsilon_M\cdot A_M}\right)} \ldots$$

$$+0 - \frac{\sigma}{k_{stl}\cdot t}\cdot\frac{T_4^{\,4} - T_1^{\,4}}{\left(\frac{1-\varepsilon_{stl}}{\varepsilon_{stl}}\right) + \frac{1}{F_{4,1}} + \left(\frac{1-\varepsilon_{stl}}{\varepsilon_{stl}}\right)} - \frac{\sigma}{k_{stl}\cdot t}\cdot\frac{T_4^{\,4} - T_2^{\,4}}{\left(\frac{1-\varepsilon_{stl}}{\varepsilon_{stl}}\right) + \frac{1}{F_{4,2}} + \left(\frac{1-\varepsilon_{stl}}{\varepsilon_{stl}}\right)} \ldots$$

$$+0 - \frac{\sigma}{k_{stl}\cdot t}\cdot\frac{T_4^{\,4} - T_3^{\,4}}{\left(\frac{1-\varepsilon_{stl}}{\varepsilon_{stl}}\right) + \frac{1}{F_{4,3}} + \left(\frac{1-\varepsilon_{stl}}{\varepsilon_{stl}}\right)} - \frac{\sigma}{k_{stl}\cdot t}\cdot\frac{T_4^{\,4} - T_5^{\,4}}{\left(\frac{1-\varepsilon_{stl}}{\varepsilon_{stl}}\right) + \frac{1}{F_{4,5}} + \left(\frac{1-\varepsilon_{stl}}{\varepsilon_{stl}}\right)} \ldots$$

$$+0 - \frac{\sigma}{k_{stl}\cdot t}\cdot\frac{T_4^{\,4} - T_6^{\,4}}{\left(\frac{1-\varepsilon_{stl}}{\varepsilon_{stl}}\right) + \frac{1}{F_{4,6}} + \left(\frac{1-\varepsilon_{stl}}{\varepsilon_{stl}}\right)} - \frac{\sigma}{k_{stl}\cdot t}\cdot\frac{T_4^{\,4} - T_7^{\,4}}{\left(\frac{1-\varepsilon_{stl}}{\varepsilon_{stl}}\right) + \frac{1}{F_{4,7}} + \left(\frac{1-\varepsilon_{stl}}{\varepsilon_{stl}}\right)} - \frac{q_{cool_4}}{\pi k_{stl}\cdot D\cdot t\cdot\delta}$$

Page 6

ARES CORPORATION	CALCULATION SHEET		
Project No. 0509206.01	Calculation No. 0509206.01-M-004	Rev. No. 1	Page No. 106 of 159
Title: DBVS AWTE Thermal Load Inventory			
Prepared By: P.S. Lowery	Date: 2.14.06	Checked By: S.R. Pierce	Date: 2.15.06

DBVS AWTE Feed Chute Thermal Load Calc

$$\frac{T_6 - 2\cdot T_5 + T_4}{s^2} - \frac{\xi_V}{k_{stl}\cdot t}\left[\left(\left|T_5 - T_{105}\right|\right)^{\frac{1}{3}}\cdot\left(T_5 - T_{105}\right) + \left(\left|T_5 - T_{room}\right|\right)^{\frac{1}{3}}\cdot\left(T_5 - T_{room}\right)\right] - \dots$$

$$+ 0 - \frac{\sigma\cdot\varepsilon_{stl}}{k_{stl}\cdot t}\left(T_5^{\,4} - T_{room}^{\,4}\right) - \frac{\sigma}{k_{stl}\cdot t}\cdot\frac{T_5^{\,4} - T_M^{\,4}}{\left(\frac{1-\varepsilon_{stl}}{\varepsilon_{stl}}\right) + \frac{1}{F_{5,M}} + \left(\frac{1-\varepsilon_M}{\varepsilon_M\cdot A_M}\right)} - \dots$$

$$+ 0 - \frac{\sigma}{k_{stl}\cdot t}\cdot\frac{T_5^{\,4} - T_2^{\,4}}{\left(\frac{1-\varepsilon_{stl}}{\varepsilon_{stl}}\right) + \frac{1}{F_{5,2}} + \left(\frac{1-\varepsilon_{stl}}{\varepsilon_{stl}}\right)} - \dots$$

$$+ 0 - \frac{\sigma}{k_{stl}\cdot t}\cdot\frac{T_5^{\,4} - T_3^{\,4}}{\left(\frac{1-\varepsilon_{stl}}{\varepsilon_{stl}}\right) + \frac{1}{F_{5,3}} + \left(\frac{1-\varepsilon_{stl}}{\varepsilon_{stl}}\right)} - \frac{\sigma}{k_{stl}\cdot t}\cdot\frac{T_5^{\,4} - T_4^{\,4}}{\left(\frac{1-\varepsilon_{stl}}{\varepsilon_{stl}}\right) + \frac{1}{F_{5,4}} + \left(\frac{1-\varepsilon_{stl}}{\varepsilon_{stl}}\right)} - \dots$$

$$+ 0 - \frac{\sigma}{k_{stl}\cdot t}\cdot\frac{T_5^{\,4} - T_6^{\,4}}{\left(\frac{1-\varepsilon_{stl}}{\varepsilon_{stl}}\right) + \frac{1}{F_{5,6}} + \left(\frac{1-\varepsilon_{stl}}{\varepsilon_{stl}}\right)} - \frac{\sigma}{k_{stl}\cdot t}\cdot\frac{T_5^{\,4} - T_7^{\,4}}{\left(\frac{1-\varepsilon_{stl}}{\varepsilon_{stl}}\right) + \frac{1}{F_{5,7}} + \left(\frac{1-\varepsilon_{stl}}{\varepsilon_{stl}}\right)} - \dots$$

$$+ 0 - \frac{\sigma}{k_{stl}\cdot t}\cdot\frac{T_5^{\,4} - T_8^{\,4}}{\left(\frac{1-\varepsilon_{stl}}{\varepsilon_{stl}}\right) + \frac{1}{F_{5,8}} + \left(\frac{1-\varepsilon_{stl}}{\varepsilon_{stl}}\right)} - \frac{q_{cool_5}}{\pi k_{stl}\cdot D_{1\text{-}5}}$$

$$\frac{T_7 - 2\cdot T_6 + T_5}{s^2} - \frac{\xi_V}{k_{stl}\cdot t}\left[\left(\left|T_6 - T_{106}\right|\right)^{\frac{1}{3}}\cdot\left(T_6 - T_{106}\right) + \left(\left|T_6 - T_{room}\right|\right)^{\frac{1}{3}}\cdot\left(T_6 - T_{room}\right)\right] - \dots$$

$$+ 0 - \frac{\sigma\cdot\varepsilon_{stl}}{k_{stl}\cdot t}\left(T_6^{\,4} - T_{room}^{\,4}\right) - \frac{\sigma}{k_{stl}\cdot t}\cdot\frac{T_6^{\,4} - T_3^{\,4}}{\left(\frac{1-\varepsilon_{stl}}{\varepsilon_{stl}}\right) + \frac{1}{F_{6,3}} + \left(\frac{1-\varepsilon_{stl}}{\varepsilon_{stl}}\right)} - \dots$$

$$+ 0 - \frac{\sigma}{k_{stl}\cdot t}\cdot\frac{T_6^{\,4} - T_4^{\,4}}{\left(\frac{1-\varepsilon_{stl}}{\varepsilon_{stl}}\right) + \frac{1}{F_{6,4}} + \left(\frac{1-\varepsilon_{stl}}{\varepsilon_{stl}}\right)} - \frac{\sigma}{k_{stl}\cdot t}\cdot\frac{T_6^{\,4} - T_5^{\,4}}{\left(\frac{1-\varepsilon_{stl}}{\varepsilon_{stl}}\right) + \frac{1}{F_{6,5}} + \left(\frac{1-\varepsilon_{stl}}{\varepsilon_{stl}}\right)} - \dots$$

$$+ 0 - \frac{\sigma}{k_{stl}\cdot t}\cdot\frac{T_6^{\,4} - T_7^{\,4}}{\left(\frac{1-\varepsilon_{stl}}{\varepsilon_{stl}}\right) + \frac{1}{F_{6,7}} + \left(\frac{1-\varepsilon_{stl}}{\varepsilon_{stl}}\right)} - \frac{\sigma}{k_{stl}\cdot t}\cdot\frac{T_6^{\,4} - T_8^{\,4}}{\left(\frac{1-\varepsilon_{stl}}{\varepsilon_{stl}}\right) + \frac{1}{F_{6,8}} + \left(\frac{1-\varepsilon_{stl}}{\varepsilon_{stl}}\right)} - \dots$$

$$+ 0 - \frac{\sigma}{k_{stl}\cdot t}\cdot\frac{T_6^{\,4} - T_9^{\,4}}{\left(\frac{1-\varepsilon_{stl}}{\varepsilon_{stl}}\right) + \frac{1}{F_{6,9}} + \left(\frac{1-\varepsilon_{stl}}{\varepsilon_{stl}}\right)} - \frac{q_{cool_6}}{\pi k_{stl}\cdot D_{1\text{-}6}}$$

Page 7

ARES CORPORATION	CALCULATION SHEET		
Project No. 0509206.01	Calculation No. 0509206.01-M-004	Rev. No. 1	Page No. 107 of 159
Title: DBVS AWTE Thermal Load Inventory			
Prepared By: P.S. Lowery	Date: 2.14.06	Checked By: S.R. Pierce	Date: 2.15.06

DBVS AWTE Feed Chute Thermal Load Calc

$$\frac{T_8 - 2\cdot T_7 + T_6}{\delta^2} - \frac{\xi_V}{k_{stl}\cdot t}\left[\left(\left|T_7 - T_{107}\right|\right)^{\frac{1}{3}}\cdot\left(T_7 - T_{107}\right) + \left(\left|T_7 - T_{room}\right|\right)^{\frac{1}{3}}\cdot\left(T_7 - T_{room}\right)\right] - \dots = 0$$

$$+ 0 - \frac{\sigma\cdot\varepsilon_{stl}}{k_{stl}\cdot t}\left(T_7^{\,4} - T_{room}^{\,4}\right) - \frac{\sigma}{k_{stl}\cdot t}\cdot\frac{T_7^{\,4} - T_4^{\,4}}{\left(\frac{1-\varepsilon_{stl}}{\varepsilon_{stl}}\right) + \frac{1}{F_{7,4}} + \left(\frac{1-\varepsilon_{stl}}{\varepsilon_{stl}}\right)} - \dots$$

$$+ 0 - \frac{\sigma}{k_{stl}\cdot t}\cdot\frac{T_7^{\,4} - T_5^{\,4}}{\left(\frac{1-\varepsilon_{stl}}{\varepsilon_{stl}}\right) + \frac{1}{F_{7,5}} + \left(\frac{1-\varepsilon_{stl}}{\varepsilon_{stl}}\right)} - \frac{\sigma}{k_{stl}\cdot t}\cdot\frac{T_7^{\,4} - T_6^{\,4}}{\left(\frac{1-\varepsilon_{stl}}{\varepsilon_{stl}}\right) + \frac{1}{F_{7,6}} + \left(\frac{1-\varepsilon_{stl}}{\varepsilon_{stl}}\right)} - \dots$$

$$+ 0 - \frac{\sigma}{k_{stl}\cdot t}\cdot\frac{T_7^{\,4} - T_8^{\,4}}{\left(\frac{1-\varepsilon_{stl}}{\varepsilon_{stl}}\right) + \frac{1}{F_{7,8}} + \left(\frac{1-\varepsilon_{stl}}{\varepsilon_{stl}}\right)} - \frac{\sigma}{k_{stl}\cdot t}\cdot\frac{T_7^{\,4} - T_9^{\,4}}{\left(\frac{1-\varepsilon_{stl}}{\varepsilon_{stl}}\right) + \frac{1}{F_{7,9}} + \left(\frac{1-\varepsilon_{stl}}{\varepsilon_{stl}}\right)} - \dots$$

$$+ 0 - \frac{\sigma}{k_{stl}\cdot t}\cdot\frac{T_7^{\,4} - T_{10}^{\,4}}{\left(\frac{1-\varepsilon_{stl}}{\varepsilon_{stl}}\right) + \frac{1}{F_{7,10}} + \left(\frac{1-\varepsilon_{stl}}{\varepsilon_{stl}}\right)} - \frac{q_{cool_7}}{\pi k_{stl}\cdot D\cdot t\cdot\delta}$$

$$\frac{T_9 - 2\cdot T_8 + T_7}{\delta^2} - \frac{\xi_V}{k_{stl}\cdot t}\left[\left(\left|T_8 - T_{108}\right|\right)^{\frac{1}{3}}\cdot\left(T_8 - T_{108}\right) + \left(\left|T_8 - T_{room}\right|\right)^{\frac{1}{3}}\cdot\left(T_8 - T_{room}\right)\right] - \dots = 0$$

$$+ 0 - \frac{\sigma\cdot\varepsilon_{stl}}{k_{stl}\cdot t}\left(T_8^{\,4} - T_{room}^{\,4}\right) - \frac{\sigma}{k_{stl}\cdot t}\cdot\frac{T_8^{\,4} - T_5^{\,4}}{\left(\frac{1-\varepsilon_{stl}}{\varepsilon_{stl}}\right) + \frac{1}{F_{8,5}} + \left(\frac{1-\varepsilon_{stl}}{\varepsilon_{stl}}\right)} - \dots$$

$$+ 0 - \frac{\sigma}{k_{stl}\cdot t}\cdot\frac{T_8^{\,4} - T_6^{\,4}}{\left(\frac{1-\varepsilon_{stl}}{\varepsilon_{stl}}\right) + \frac{1}{F_{8,6}} + \left(\frac{1-\varepsilon_{stl}}{\varepsilon_{stl}}\right)} - \frac{\sigma}{k_{stl}\cdot t}\cdot\frac{T_8^{\,4} - T_7^{\,4}}{\left(\frac{1-\varepsilon_{stl}}{\varepsilon_{stl}}\right) + \frac{1}{F_{8,7}} + \left(\frac{1-\varepsilon_{stl}}{\varepsilon_{stl}}\right)} - \dots$$

$$+ 0 - \frac{\sigma}{k_{stl}\cdot t}\cdot\frac{T_8^{\,4} - T_9^{\,4}}{\left(\frac{1-\varepsilon_{stl}}{\varepsilon_{stl}}\right) + \frac{1}{F_{8,9}} + \left(\frac{1-\varepsilon_{stl}}{\varepsilon_{stl}}\right)} - \frac{\sigma}{k_{stl}\cdot t}\cdot\frac{T_8^{\,4} - T_{10}^{\,4}}{\left(\frac{1-\varepsilon_{stl}}{\varepsilon_{stl}}\right) + \frac{1}{F_{8,10}} + \left(\frac{1-\varepsilon_{stl}}{\varepsilon_{stl}}\right)} - \dots$$

$$+ 0 - \frac{\sigma}{k_{stl}\cdot t}\cdot\frac{T_8^{\,4} - T_{11}^{\,4}}{\left(\frac{1-\varepsilon_{stl}}{\varepsilon_{stl}}\right) + \frac{1}{F_{8,11}} + \left(\frac{1-\varepsilon_{stl}}{\varepsilon_{stl}}\right)} - \frac{q_{cool_8}}{\pi k_{stl}\cdot D\cdot t\cdot\delta}$$

ARES CORPORATION	CALCULATION SHEET		
Project No. 0509206.01	Calculation No. 0509206.01-M-004	Rev. No. 1	Page No. 108 of 159
Title: DBVS AWTE Thermal Load Inventory			
Prepared By: P.S. Lowery	Date: 2.14.06	Checked By: S.R. Pierce	Date: 2.15.06

DBVS AWTE Feed Chute Thermal Load Calc

$$\frac{T_{10} - 2 \cdot T_9 + T_8}{s^2} \ldots = 0$$

$$+ 0 - \frac{\dot{S}V}{k_{stl} \cdot t}\left[\left(\left|T_9 - T_{109}\right|\right)^{\frac{1}{3}} \cdot \left(T_9 - T_{109}\right) + \left(\left|T_9 - T_{room}\right|\right)^{\frac{1}{3}} \cdot \left(T_9 - T_{room}\right)\right] \ldots$$

$$+ 0 - \frac{\sigma \cdot \varepsilon_{stl}}{k_{stl} \cdot t}\left(T_9^{\,4} - T_{room}^{\,4}\right) - \frac{\sigma}{k_{stl} \cdot t} \cdot \frac{T_9^{\,4} - T_6^{\,4}}{\left(\frac{1 - \varepsilon_{stl}}{\varepsilon_{stl}}\right) + \frac{1}{F_{9,6}} + \left(\frac{1 - \varepsilon_{stl}}{\varepsilon_{stl}}\right)} \ldots$$

$$+ 0 - \frac{\sigma}{k_{stl} \cdot t} \cdot \frac{T_9^{\,4} - T_7^{\,4}}{\left(\frac{1 - \varepsilon_{stl}}{\varepsilon_{stl}}\right) + \frac{1}{F_{9,7}} + \left(\frac{1 - \varepsilon_{stl}}{\varepsilon_{stl}}\right)} - \frac{\sigma}{k_{stl} \cdot t} \cdot \frac{T_9^{\,4} - T_8^{\,4}}{\left(\frac{1 - \varepsilon_{stl}}{\varepsilon_{stl}}\right) + \frac{1}{F_{9,8}} + \left(\frac{1 - \varepsilon_{stl}}{\varepsilon_{stl}}\right)} \ldots$$

$$+ 0 - \frac{\sigma}{k_{stl} \cdot t} \cdot \frac{T_9^{\,4} - T_{10}^{\,4}}{\left(\frac{1 - \varepsilon_{stl}}{\varepsilon_{stl}}\right) + \frac{1}{F_{9,10}} + \left(\frac{1 - \varepsilon_{stl}}{\varepsilon_{stl}}\right)} - \frac{\sigma}{k_{stl} \cdot t} \cdot \frac{T_9^{\,4} - T_{11}^{\,4}}{\left(\frac{1 - \varepsilon_{stl}}{\varepsilon_{stl}}\right) + \frac{1}{F_{9,11}} + \left(\frac{1 - \varepsilon_{stl}}{\varepsilon_{stl}}\right)} \ldots$$

$$+ 0 - \frac{\sigma}{k_{stl} \cdot t} \cdot \frac{T_9^{\,4} - T_{12}^{\,4}}{\left(\frac{1 - \varepsilon_{stl}}{\varepsilon_{stl}}\right) + \frac{1}{F_{9,12}} + \left(\frac{1 - \varepsilon_{stl}}{\varepsilon_{stl}}\right)} - \frac{q_{cool_9}}{\pi k_{stl} \cdot D \cdot t \cdot \delta}$$

$$\frac{T_{11} - 2 \cdot T_{10} + T_9}{s^2} \ldots = 0$$

$$+ 0 - \frac{\dot{S}V}{k_{stl} \cdot t}\left[\left(\left|T_{10} - T_{110}\right|\right)^{\frac{1}{3}} \cdot \left(T_{10} - T_{110}\right) + \left(\left|T_{10} - T_{room}\right|\right)^{\frac{1}{3}} \cdot \left(T_{10} - T_{room}\right)\right] \ldots$$

$$+ 0 - \frac{\sigma \cdot \varepsilon_{stl}}{k_{stl} \cdot t}\left(T_{10}^{\,4} - T_{room}^{\,4}\right) - \frac{\sigma}{k_{stl} \cdot t} \cdot \frac{T_{10}^{\,4} - T_7^{\,4}}{\left(\frac{1 - \varepsilon_{stl}}{\varepsilon_{stl}}\right) + \frac{1}{F_{10,7}} + \left(\frac{1 - \varepsilon_{stl}}{\varepsilon_{stl}}\right)} \ldots$$

$$+ 0 - \frac{\sigma}{k_{stl} \cdot t} \cdot \frac{T_{10}^{\,4} - T_8^{\,4}}{\left(\frac{1 - \varepsilon_{stl}}{\varepsilon_{stl}}\right) + \frac{1}{F_{10,8}} + \left(\frac{1 - \varepsilon_{stl}}{\varepsilon_{stl}}\right)} - \frac{\sigma}{k_{stl} \cdot t} \cdot \frac{T_{10}^{\,4} - T_9^{\,4}}{\left(\frac{1 - \varepsilon_{stl}}{\varepsilon_{stl}}\right) + \frac{1}{F_{10,9}} + \left(\frac{1 - \varepsilon_{stl}}{\varepsilon_{stl}}\right)} \ldots$$

$$+ 0 - \frac{\sigma}{k_{stl} \cdot t} \cdot \frac{T_{10}^{\,4} - T_{11}^{\,4}}{\left(\frac{1 - \varepsilon_{stl}}{\varepsilon_{stl}}\right) + \frac{1}{F_{10,11}} + \left(\frac{1 - \varepsilon_{stl}}{\varepsilon_{stl}}\right)} - \frac{\sigma}{k_{stl} \cdot t} \cdot \frac{T_{10}^{\,4} - T_{12}^{\,4}}{\left(\frac{1 - \varepsilon_{stl}}{\varepsilon_{stl}}\right) + \frac{1}{F_{10,12}} + \left(\frac{1 - \varepsilon_{stl}}{\varepsilon_{stl}}\right)} \quad \frac{q_{cool_{10}}}{\pi k_{stl} \cdot D \cdot t \cdot \delta}$$

ARES CORPORATION	CALCULATION SHEET		
Project No. 0509206.01	Calculation No. 0509206.01-M-004	Rev. No. 1	Page No. 109 of 159
Title: DBVS AWTE Thermal Load Inventory			
Prepared By: P.S. Lowery	Date: 2.14.06	Checked By: S.R. Pierce	Date: 2.15.06

DBVS AWTE Feed Chute Thermal Load Calc

$$\frac{T_{12} - 2 \cdot T_{11} + T_{10}}{\delta^2} \ldots = 0$$

$$+ 0 - \frac{\xi_V}{k_{stl} \cdot t} \left[\left(\left| T_{11} - T_{111} \right| \right)^{\frac{1}{3}} \cdot \left(T_{11} - T_{111} \right) + \left(\left| T_{11} - T_{room} \right| \right)^{\frac{1}{3}} \cdot \left(T_{11} - T_{room} \right) \right] -$$

$$+ 0 - \frac{\sigma \cdot \varepsilon_{stl}}{k_{stl} \cdot t} \left(T_{11}^{\ 4} - T_{room}^{\ 4} \right) - \frac{\sigma}{k_{stl} \cdot t} \cdot \frac{T_{11}^{\ 4} - T_8^{\ 4}}{\left(\frac{1 - \varepsilon_{stl}}{\varepsilon_{stl}} \right) + \frac{1}{F_{11,8}} + \left(\frac{1 - \varepsilon_{stl}}{\varepsilon_{stl}} \right)} \ldots$$

$$+ 0 - \frac{\sigma}{k_{stl} \cdot t} \cdot \frac{T_{11}^{\ 4} - T_9^{\ 4}}{\left(\frac{1 - \varepsilon_{stl}}{\varepsilon_{stl}} \right) + \frac{1}{F_{11,9}} + \left(\frac{1 - \varepsilon_{stl}}{\varepsilon_{stl}} \right)} - \frac{\sigma}{k_{stl} \cdot t} \cdot \frac{T_{11}^{\ 4} - T_{10}^{\ 4}}{\left(\frac{1 - \varepsilon_{stl}}{\varepsilon_{stl}} \right) + \frac{1}{F_{11,10}} + \left(\frac{1 - \varepsilon_{stl}}{\varepsilon_{stl}} \right)} \ldots$$

$$+ 0 - \frac{\sigma}{k_{stl} \cdot t} \cdot \frac{T_{11}^{\ 4} - T_{12}^{\ 4}}{\left(\frac{1 - \varepsilon_{stl}}{\varepsilon_{stl}} \right) + \frac{1}{F_{11,12}} + \left(\frac{1 - \varepsilon_{stl}}{\varepsilon_{stl}} \right)} - \frac{q_{cool_{11}}}{\pi k_{stl} \cdot D \cdot t \cdot \delta}$$

$$\frac{T_{12} - T_{11}}{\delta^2} \ldots = 0$$

$$+ 0 - \frac{\xi_V}{k_{stl} \cdot t} \left[\left(\left| T_{12} - T_{112} \right| \right)^{\frac{1}{3}} \cdot \left(T_{12} - T_{112} \right) + \left(\left| T_{12} - T_{room} \right| \right)^{\frac{1}{3}} \cdot \left(T_{12} - T_{room} \right) \right] -$$

$$+ 0 - \frac{\sigma \cdot \varepsilon_{stl}}{k_{stl} \cdot t} \left(T_{12}^{\ 4} - T_{room}^{\ 4} \right) - \frac{\sigma}{k_{stl} \cdot t} \cdot \frac{T_{12}^{\ 4} - T_9^{\ 4}}{\left(\frac{1 - \varepsilon_{stl}}{\varepsilon_{stl}} \right) + \frac{1}{F_{12,9}} + \left(\frac{1 - \varepsilon_{stl}}{\varepsilon_{stl}} \right)} \ldots$$

$$+ 0 - \frac{\sigma}{k_{stl} \cdot t} \cdot \frac{T_{12}^{\ 4} - T_{10}^{\ 4}}{\left(\frac{1 - \varepsilon_{stl}}{\varepsilon_{stl}} \right) + \frac{1}{F_{12,10}} + \left(\frac{1 - \varepsilon_{stl}}{\varepsilon_{stl}} \right)} - \frac{\sigma}{k_{stl} \cdot t} \cdot \frac{T_{12}^{\ 4} - T_{11}^{\ 4}}{\left(\frac{1 - \varepsilon_{stl}}{\varepsilon_{stl}} \right) + \frac{1}{F_{12,11}} + \left(\frac{1 - \varepsilon_{stl}}{\varepsilon_{stl}} \right)} - \frac{q_{cool_{12}}}{\pi k_{stl} \cdot D \cdot t \cdot \delta}$$

Page 10

ARES CORPORATION	CALCULATION SHEET		
Project No. 0509206.01	Calculation No. 0509206.01-M-004	Rev. No. 1	Page No. 110 of 159
Title: DBVS AWTE Thermal Load Inventory			
Prepared By: P.S. Lowery	Date: 2.14.06	Checked By: S.R. Pierce	Date: 2.15.06

DBVS AWTE Field Chute Thermal Load Calc

Now define the energy equations for the air column elements ...

$$\frac{T_{102} - 2\cdot T_{101} + T_0}{\delta^2} - \frac{4\cdot\xi_V}{k_A\cdot D}\cdot\left(\left|T_{101} - T_1\right|\right)^{\frac{1}{3}}\cdot\left(T_{101} - T_1\right) - \frac{4m_{dot}\cdot C_P}{\pi\cdot k_A\cdot D^2\cdot\delta}\cdot\left(T_{101} - T_0\right) = 0$$

$$\frac{T_{103} - 2\cdot T_{102} + T_{101}}{\delta^2} - \frac{4\cdot\xi_V}{k_A\cdot D}\cdot\left(\left|T_{102} - T_2\right|\right)^{\frac{1}{3}}\cdot\left(T_{102} - T_2\right) - \frac{4m_{dot}\cdot C_P}{\pi\cdot k_A\cdot D^2\cdot\delta}\cdot\left(T_{102} - T_{101}\right) = 0$$

$$\frac{T_{104} - 2\cdot T_{103} + T_{102}}{\delta^2} - \frac{4\cdot\xi_V}{k_A\cdot D}\cdot\left(\left|T_{103} - T_3\right|\right)^{\frac{1}{3}}\cdot\left(T_{103} - T_3\right) - \frac{4m_{dot}\cdot C_P}{\pi\cdot k_A\cdot D^2\cdot\delta}\cdot\left(T_{103} - T_{102}\right) = 0$$

$$\frac{T_{105} - 2\cdot T_{104} + T_{103}}{\delta^2} - \frac{4\cdot\xi_V}{k_A\cdot D}\cdot\left(\left|T_{104} - T_4\right|\right)^{\frac{1}{3}}\cdot\left(T_{104} - T_4\right) - \frac{4m_{dot}\cdot C_P}{\pi\cdot k_A\cdot D^2\cdot\delta}\cdot\left(T_{104} - T_{103}\right) = 0$$

$$\frac{T_{106} - 2\cdot T_{105} + T_{104}}{\delta^2} - \frac{4\cdot\xi_V}{k_A\cdot D}\cdot\left(\left|T_{105} - T_5\right|\right)^{\frac{1}{3}}\cdot\left(T_{105} - T_5\right) - \frac{4m_{dot}\cdot C_P}{\pi\cdot k_A\cdot D^2\cdot\delta}\cdot\left(T_{105} - T_{104}\right) = 0$$

$$\frac{T_{107} - 2\cdot T_{106} + T_{105}}{\delta^2} - \frac{4\cdot\xi_V}{k_A\cdot D}\cdot\left(\left|T_{106} - T_6\right|\right)^{\frac{1}{3}}\cdot\left(T_{106} - T_6\right) - \frac{4m_{dot}\cdot C_P}{\pi\cdot k_A\cdot D^2\cdot\delta}\cdot\left(T_{105} - T_{105}\right) = 0$$

$$\frac{T_{108} - 2\cdot T_{107} + T_{106}}{\delta^2} - \frac{4\cdot\xi_V}{k_A\cdot D}\cdot\left(\left|T_{107} - T_7\right|\right)^{\frac{1}{3}}\cdot\left(T_{107} - T_7\right) - \frac{4m_{dot}\cdot C_P}{\pi\cdot k_A\cdot D^2\cdot\delta}\cdot\left(T_{107} - T_{106}\right) = 0$$

$$\frac{T_{109} - 2\cdot T_{108} + T_{107}}{\delta^2} - \frac{4\cdot\xi_V}{k_A\cdot D}\cdot\left(\left|T_{108} - T_8\right|\right)^{\frac{1}{3}}\cdot\left(T_{108} - T_8\right) - \frac{4m_{dot}\cdot C_P}{\pi\cdot k_A\cdot D^2\cdot\delta}\cdot\left(T_{108} - T_{107}\right) = 0$$

$$\frac{T_{110} - 2\cdot T_{109} + T_{108}}{\delta^2} - \frac{4\cdot\xi_V}{k_A\cdot D}\cdot\left(\left|T_{109} - T_9\right|\right)^{\frac{1}{3}}\cdot\left(T_{109} - T_9\right) - \frac{4m_{dot}\cdot C_P}{\pi\cdot k_A\cdot D^2\cdot\delta}\cdot\left(T_{109} - T_{108}\right) = 0$$

Page 11

ARES CORPORATION	CALCULATION SHEET		
Project No. 0509206.01	Calculation No. 0509206.01-M-004	Rev. No. 1	Page No. 111 of 159
Title: DBVS AWTE Thermal Load Inventory			
Prepared By: P.S. Lowery	Date: 2.14.06	Checked By: S.R. Pierce	Date: 2.15.06

DBVS AWTE Feed Chute Thermal Load Calc

$$\frac{T_{111} - 2\cdot T_{110} + T_{109}}{\delta^2} - \frac{4\cdot\xi_V}{k_A\cdot D}\left(\left|T_{110} - T_{10}\right|\right)^{\frac{1}{3}}\cdot\left(T_{110} - T_{10}\right) - \frac{4m_{dot}\cdot C_P}{\pi\cdot k_A\cdot D^2\cdot\delta}\left(T_{110} - T_{109}\right) = 0$$

$$\frac{T_{112} - 2\cdot T_{111} + T_{110}}{\delta^2} - \frac{4\cdot\xi_V}{k_A\cdot D}\left(\left|T_{111} - T_{11}\right|\right)^{\frac{1}{3}}\cdot\left(T_{111} - T_{11}\right) - \frac{4m_{dot}\cdot C_P}{\pi\cdot k_A\cdot D^2\cdot\delta}\left(T_{111} - T_{110}\right) = 0$$

$$\frac{T_{112} - T_{111}}{\delta^2} + \frac{4\cdot\xi_V}{k_A\cdot D}\left(\left|T_{112} - T_{12}\right|\right)^{\frac{1}{3}}\cdot\left(T_{112} - T_{12}\right) - \frac{4m_{dot}\cdot C_P}{\pi\cdot k_A\cdot D^2\cdot\delta}\left(T_{112} - T_{111}\right) = 0$$

$$\begin{pmatrix} T1 \\ T2 \\ T3 \\ T4 \\ T5 \\ T6 \\ T7 \\ T8 \\ T9 \\ T10 \\ T11 \\ T12 \\ T101 \\ T102 \\ T103 \\ T104 \\ T105 \\ T106 \\ T107 \\ T108 \\ T109 \\ T110 \\ T111 \\ T112 \end{pmatrix} := \mathrm{Find}(T_1, T_2, T_3, T_4, T_5, T_6, T_7, T_8, T_9, T_{10}, T_{11}, T_{12}, T_{101}, T_{102}, T_{103}, T_{104}, T_{105}, T_{106}, T_{107}, T_{108}, T_{109}, T$$

Page 12

ARES CORPORATION	CALCULATION SHEET		
Project No. 0509206.01	Calculation No. 0509206.01-M-004	Rev. No. 1	Page No. 112 of 159
Title: DBVS AWTE Thermal Load Inventory			
Prepared By: P.S. Lowery	Date: 2.14.06	Checked By: S.R. Pierce	Date: 2.15.06

DBVS AWTE Feed Chute Thermal Load Calc

Temperatures for the steel chute are ...

T1 = 508.522 K	T1C := KtoC(T1)	T1C = 235.372
T2 = 424.582 K	T2C := KtoC(T2)	T2C = 151.432
T3 = 349.519 K	T3C := KtoC(T3)	T3C = 76.369
T4 = 322.927 K	T4C := KtoC(T4)	T4C = 49.777
T5 = 309.351 K	T5C := KtoC(T5)	T5C = 36.201
T6 = 301.227 K	T6C := KtoC(T6)	T6C = 28.077
T7 = 299.068 K	T7C := KtoC(T7)	T7C = 25.918
T8 = 298.435 K	T8C := KtoC(T8)	T8C = 25.285
T9 = 298.24 K	T9C := KtoC(T9)	T9C = 25.09
T10 = 298.158 K	T10C := KtoC(T10)	T10C = 25.028
T11 = 298.158 K	T11C := KtoC(T11)	T11C = 25.008
T12 = 298.147 K	T12C := KtoC(T12)	T12C = 24.997

Temperature for the air column inside the chute are ...

T101 = 510.456 K	T101C := KtoC(T101)	T101C = 237.366
T102 = 424.863 K	T102C := KtoC(T102)	T102C = 151.713
T103 = 350.354 K	T103C := KtoC(T103)	T103C = 77.204
T104 = 323.25 K	T104C := KtoC(T104)	T104C = 50.1
T105 = 309.519 K	T105C := KtoC(T105)	T105C = 36.369
T106 = 301.4 K	T106C := KtoC(T106)	T106C = 28.25
T107 = 299.133 K	T107C := KtoC(T107)	T107C = 25.983
T108 = 298.461 K	T108C := KtoC(T108)	T108C = 25.311
T109 = 298.251 K	T109C := KtoC(T109)	T109C = 25.101
T110 = 298.183 K	T110C := KtoC(T110)	T110C = 25.033
T111 = 298.159 K	T111C := KtoC(T111)	T111C = 25.009
T112 = 298.149 K	T112C := KtoC(T112)	T112C = 24.999

Page 13

CALCULATION SHEET

Project No. 0509206.01	Calculation No. 0509206.01-M-004	Rev. No. 1	Page No. 113 of 159
Title: DBVS AWTE Thermal Load Inventory			
Prepared By: P.S. Lowery	Date: 2.14.06	Checked By: S.R. Pierce	Date: 2.15.06

DBVS AWTE Feed Chute Thermal Load Calc

$$T_{plot} := \begin{pmatrix} T1C \\ T2C \\ T3C \\ T4C \\ T5C \\ T6C \\ T7C \\ T8C \\ T9C \\ T10C \\ T11C \\ T12C \end{pmatrix} \qquad zplot := \begin{pmatrix} 0.5 \\ 1.5 \\ 2.5 \\ 3.5 \\ 4.5 \\ 5.5 \\ 6.5 \\ 7.5 \\ 8.5 \\ 9.5 \\ 10.5 \\ 11.5 \end{pmatrix}$$

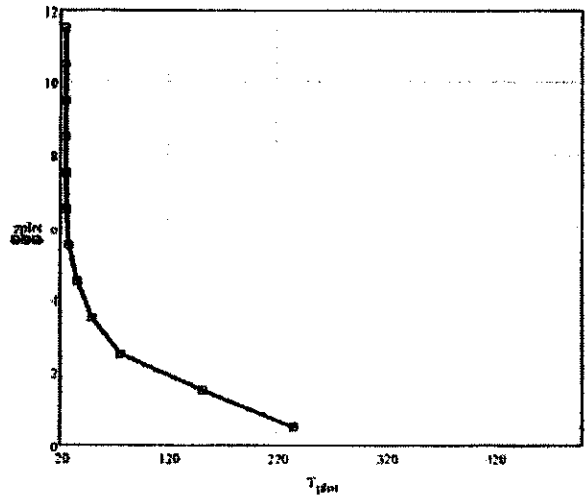

Page 14

ARES CORPORATION	CALCULATION SHEET		
Project No. 0509206.01	Calculation No. 0509206.01-M-004	Rev. No. 1	Page No. 114 of 159
Title: DBVS AWTE Thermal Load Inventory			
Prepared By: P.S. Lowery	Date: 2.14.06	Checked By: S.R. Pierce	Date: 2.15.06

DBVS AWTE Feed Chute Thermal Load Calc

Now compute the heat loss from the chute to the AWTE room ...

$$Q := \begin{bmatrix} \pi \cdot D \cdot \delta \left[\xi_V \cdot \left(\left| T1 - T_{room} \right| \right)^{\frac{1}{3}} \cdot \left(T1 - T_{room} \right) + \sigma \cdot \varepsilon_{stl} \cdot \left(T1^4 - T_{room}^4 \right) \right] \\ \pi \cdot D \cdot \delta \left[\xi_V \cdot \left(\left| T2 - T_{room} \right| \right)^{\frac{1}{3}} \cdot \left(T2 - T_{room} \right) + \sigma \cdot \varepsilon_{stl} \cdot \left(T2^4 - T_{room}^4 \right) \right] \\ \pi \cdot D \cdot \delta \left[\xi_V \cdot \left(\left| T3 - T_{room} \right| \right)^{\frac{1}{3}} \cdot \left(T3 - T_{room} \right) + \sigma \cdot \varepsilon_{stl} \cdot \left(T3^4 - T_{room}^4 \right) \right] \\ \pi \cdot D \cdot \delta \left[\xi_V \cdot \left(\left| T4 - T_{room} \right| \right)^{\frac{1}{3}} \cdot \left(T4 - T_{room} \right) + \sigma \cdot \varepsilon_{stl} \cdot \left(T4^4 - T_{room}^4 \right) \right] \\ \pi \cdot D \cdot \delta \left[\xi_V \cdot \left(\left| T5 - T_{room} \right| \right)^{\frac{1}{3}} \cdot \left(T5 - T_{room} \right) + \sigma \cdot \varepsilon_{stl} \cdot \left(T5^4 - T_{room}^4 \right) \right] \\ \pi \cdot D \cdot \delta \left[\xi_V \cdot \left(\left| T6 - T_{room} \right| \right)^{\frac{1}{3}} \cdot \left(T6 - T_{room} \right) + \sigma \cdot \varepsilon_{stl} \cdot \left(T6^4 - T_{room}^4 \right) \right] \\ \pi \cdot D \cdot \delta \left[\xi_V \cdot \left(\left| T7 - T_{room} \right| \right)^{\frac{1}{3}} \cdot \left(T7 - T_{room} \right) + \sigma \cdot \varepsilon_{stl} \cdot \left(T7^4 - T_{room}^4 \right) \right] \\ \pi \cdot D \cdot \delta \left[\xi_V \cdot \left(\left| T8 - T_{room} \right| \right)^{\frac{1}{3}} \cdot \left(T8 - T_{room} \right) + \sigma \cdot \varepsilon_{stl} \cdot \left(T8^4 - T_{room}^4 \right) \right] \\ \pi \cdot D \cdot \delta \left[\xi_V \cdot \left(\left| T9 - T_{room} \right| \right)^{\frac{1}{3}} \cdot \left(T9 - T_{room} \right) + \sigma \cdot \varepsilon_{stl} \cdot \left(T9^4 - T_{room}^4 \right) \right] \\ \pi \cdot D \cdot \delta \left[\xi_V \cdot \left(\left| T10 - T_{room} \right| \right)^{\frac{1}{3}} \cdot \left(T10 - T_{room} \right) + \sigma \cdot \varepsilon_{stl} \cdot \left(T10^4 - T_{room}^4 \right) \right] \\ \pi \cdot D \cdot \delta \left[\xi_V \cdot \left(\left| T11 - T_{room} \right| \right)^{\frac{1}{3}} \cdot \left(T11 - T_{room} \right) + \sigma \cdot \varepsilon_{stl} \cdot \left(T11^4 - T_{room}^4 \right) \right] \\ \pi \cdot D \cdot \delta \left[\xi_V \cdot \left(\left| T12 - T_{room} \right| \right)^{\frac{1}{3}} \cdot \left(T12 - T_{room} \right) + \sigma \cdot \varepsilon_{stl} \cdot \left(T12^4 - T_{room}^4 \right) \right] \end{bmatrix}$$

CALCULATION SHEET

Project No. 0509206.01	Calculation No. 0509206.01-M-004	Rev. No. 1	Page No. 115 of 159
Title: DBVS AWTE Thermal Load Inventory			
Prepared By: P.S. Lowery	Date: 2.14.06	Checked By: S.R. Pierce	Date: 2.15.06

DBVS AWTE Field Chute Thermal Load Calc

	[illegible]	
1	874.34	
2	389.825	
3	114.804	
4	48.429	
5	18.215	
Q = 6	4.268	W
7	1.148	
8	0.332	
9	0.1	
10	0.031	
11	$8.067 \cdot 10^{-3}$	
12	$-2.749 \cdot 10^{-3}$	

Compute the total heat load to the AWTE room ...

$$Q_{sum} := \sum_{n=1}^{12} Q_n \qquad Q_{sum} = 1.453\,kW$$

Page 16

Calculation Sheet: QAP 3.1, Rev. 6 (11-15-05)

ARES CORPORATION	CALCULATION SHEET		
Project No. 0509206.01	Calculation No. 0509206.01-M-004	Rev. No. 1	Page No. 116 of 159
Title: DBVS AWTE Thermal Load Inventory			
Prepared By: P.S. Lowery	Date: 2.14.06	Checked By: S.R. Pierce	Date: 2.15.06

APPENDIX E

MATHCAD MODEL TO ESTIMATE THE TEMPERATURE DISTRIBUTION AND HEAT LOSS OFF THE OFF-GAS INLET LINE IN THE AWTE

A&ES CORPORATION	CALCULATION SHEET		
Project No. 0509206.01	Calculation No. 0509206.01-M-004	Rev. No. 1	Page No. 117 of 159
Title: DBVS AWTE Thermal Load Inventory			
Prepared By: P.S. Lowery	Date: 2.14.06	Checked By: S.R. Pierce	Date: 2.15.06

DBVS AWTE Off-Gas Inlet Line Thermal

°C = 1 °F = 1

$KtoC(x) := \left(\frac{x}{K} - 273.15\right)$ $FtoC(x) := \frac{5}{9}\left(\frac{x}{°F} - 32\right)$

ORIGIN = 1

Model Parameters:

$\sigma := 5.67 \cdot 10^{-8} \frac{W}{m^2 \cdot K^4}$

$k_{sll} := 60.5 \frac{W}{m \cdot K}$

$D := 4in$ $t := 0.237in$ $L_{ml} := 18ft$ $L_{tk} := 18in$

$\varepsilon_{sll} := 0.85$

$\varepsilon_M := 0.7$ $A_M := \frac{(22ft) \cdot (5.5ft)}{\pi \cdot D \cdot \delta}$ $A_M = 77.031$ $T_M := (1050 + 273.15)K$ Melt Top Surface Temperature

Natural Convection Heat Transfer Coefficient Correlation Parameters

Natural convection heat transfer coefficients are modeled using correlations from Holman, Heat Transfer, 3rd Edition, p. 219. They are of the form ...

$h = \xi_o (\Delta T)^{1/3}$

where the correlation parameter, ξ_o, reflects the shape and orientation of the surface (the subscript "o" indicates the orientation – e.g., V -> vertical, HU -> horizontal, heated surface facing up, and so on).

$\xi_V := 1.32 \frac{W}{m^2 \cdot \sqrt[3]{K^4}}$ $\xi_{HU} := 1.52 \frac{W}{m^2 \sqrt[3]{K^4}}$

CALCULATION SHEET

Project No. 0509206.01	Calculation No. 0509206.01-M-004	Rev. No. 1	Page No. 118 of 159
Title: DBVS AWTE Thermal Load Inventory			
Prepared By: P.S. Lowery	Date: 2.14.06	Checked By: S.R. Pierce	Date: 2.15.06

DBVS AWTE Off-Gas Inlet Line Thermal

Calculate the forced convective heat transfer coefficient for transfer to/from the inlet air flow and the inlet line walls ...

At the air temperature of 50°C, the properties are ...

$\rho_A := 1.0928 \frac{kg}{m^3}$ $\nu_A := 18 \cdot 10^{-6} \frac{m^2}{s}$ $k_A := 0.0278 \frac{W}{m \cdot K}$ $C_p := 1006 \frac{J}{kg \cdot K}$ $Pr := 0.7$

The process flow sheet provided in Appendix A (p. 25 of this calculation) indicates the inlet air volumetric flow rate is ...

$Q_A := 115 \frac{ft^3}{min}$

The cross-sectional area of the inlet line is ... $A_{inlet} := \frac{\pi}{4} \cdot D^2$ $A_{inlet} = 8.107 \times 10^{-3} m^2$

Therefore, the bulk flow speed is ... $u_A := \frac{Q_A}{A_{inlet}}$ $u_A = 6.694 \frac{m}{s}$

The corresponding air mass flow rate is ... $m_{dot} := \rho_A \cdot Q_A$ $m_{dot} = 0.059 \frac{kg}{s}$

The Reynolds number is ... $Re := \frac{u_A \cdot D}{\nu_A}$ $Re = 3.779 \times 10^4$

At this Reynolds & Prandtl number, for turbulent, fully-developed tube flow, the Nusselt number is ...

$Nu := 83$ (Table 9-1 of Kays & Crawford Convective Heat and Mass Transfer, 1968, McGraw-Hill Book Company

The Nusselt number is defined as Nu = hD/k, so the convective heat transfer coefficient is ...

$h_{indot} := Nu \frac{k_A}{D}$ $h_{indot} = 22.711 \frac{J}{m^2 \cdot K} W$

$T_0 := (Floor(1875 \cdot F) + 273.15)K$ Temperature at the base of the portion of the chute "exposed" to the off-gas plenum region

$T_{wall} := (570 + 273.15)K$ Temperature used to represent the OIG wall temperatures for the purposes of radiant heat transfer from the electrode surface

$T_{OG} := (Floor(875 \cdot F) + 273.15)K$ Temperature of the off-gas plenum gases

$T_A := T_{wall}$ Temperature of the air space between the OIG hood and the AWTE floor (set equal to max hood temperature for conservatism)

$T_{AWTE} := T_{wall}$ Temperature of the underside of the AWTE floor (set equal to max hood temperature for conservatism)

$T_{room} := (Floor(125 \cdot F) + 273.15)K$ Temperature of the AWTE room and the associated internal equipment & structures

$T_{inlet} := (50 + 273.15)K$ Temperature of off-gas inlet air (assume hot summer day)

Page 2

CALCULATION SHEET

Project No. 0509206.01	Calculation No. 0509206.01-M-004	Rev. No. 1	Page No. 119 of 159
Title: DBVS AWTE Thermal Load Inventory			
Prepared By: P.S. Lowary	Date: 2.14.06	Checked By: S.R. Pierce	Date: 2.15.06

DBVS AWTE Off-Gas Inlet Line Thermal

Nodes 1 thru 12 represent the steel chute
Node 101 thru 112 represent the air column within the steel chute

Load matrix of view factors, F ...

$F_{1M} := 0.151$ $F_{2M} := 0.011$ $F_{3M} := 0.002$ $F_{4M} := 0.001$ $F_{5M} := 0.0004$ View factors from the cylindrical segments to the melt surface

$$F_M := \begin{pmatrix} 0.697 & 0.140 & 0.009 & 0.002 & 0 & 0 & 0 & 0 & 0 & 0 & 0 & 0 \\ 0.140 & 0.697 & 0.140 & 0.009 & 0.002 & 0 & 0 & 0 & 0 & 0 & 0 & 0 \\ 0.009 & 0.140 & 0.697 & 0.140 & 0.009 & 0.002 & 0 & 0 & 0 & 0 & 0 & 0 \\ 0.002 & 0.009 & 0.140 & 0.697 & 0.140 & 0.009 & 0.002 & 0 & 0 & 0 & 0 & 0 \\ 0 & 0.002 & 0.009 & 0.140 & 0.697 & 0.140 & 0.009 & 0.002 & 0 & 0 & 0 & 0 \\ 0 & 0 & 0.002 & 0.009 & 0.140 & 0.697 & 0.140 & 0.009 & 0.002 & 0 & 0 & 0 \\ 0 & 0 & 0 & 0.002 & 0.009 & 0.140 & 0.697 & 0.140 & 0.009 & 0.002 & 0 & 0 \\ 0 & 0 & 0 & 0 & 0.002 & 0.009 & 0.140 & 0.697 & 0.140 & 0.009 & 0.002 & 0 \\ 0 & 0 & 0 & 0 & 0 & 0.002 & 0.009 & 0.140 & 0.697 & 0.140 & 0.009 & 0.002 \\ 0 & 0 & 0 & 0 & 0 & 0 & 0.002 & 0.009 & 0.140 & 0.697 & 0.140 & 0.009 \\ 0 & 0 & 0 & 0 & 0 & 0 & 0 & 0.002 & 0.009 & 0.140 & 0.697 & 0.140 \\ 0 & 0 & 0 & 0 & 0 & 0 & 0 & 0 & 0.002 & 0.009 & 0.140 & 0.697 \end{pmatrix}$$

View factors from a cylindrical segment to its neighboring cylindrical segments. For example, $F_{1,3}$ is the view factor from segment 1 in the model to segment 3.
$F_{1,3}=F_{3,1}=0.009$

F =

	1	2	3	4	5	6	7	8	9	10	11	12
1	0.697	0.14	0.009	0.002	0	0	0	0	0	0	0	0
2	0.14	0.697	0.14	0.009	0.002	0	0	0	0	0	0	0
3	0.009	0.14	0.697	0.14	0.009	0.002	0	0	0	0	0	0
4	0.002	0.009	0.14	0.697	0.14	0.009	0.002	0	0	0	0	0
5	0	0.002	0.009	0.14	0.697	0.14	0.009	0.002	0	0	0	0
6	0	0	0.002	0.009	0.14	0.697	0.14	0.009	0.002	0	0	0
7	0	0	0	0.002	0.009	0.14	0.697	0.14	0.009	0.002	0	0
8	0	0	0	0	0.002	0.009	0.14	0.697	0.14	0.009	0.002	0
9	0	0	0	0	0	0.002	0.009	0.14	0.697	0.14	0.009	0.002
10	0	0	0	0	0	0	0.002	0.009	0.14	0.697	0.14	0.009
11	0	0	0	0	0	0	0	0.002	0.009	0.14	0.697	0.14
12	0	0	0	0	0	0	0	0	0.002	0.009	0.14	0.697

A.R.E.S. CORPORATION	CALCULATION SHEET		
Project No. 0509206.01	Calculation No. 0509206.01-M-004	Rev. No. 1	Page No. 120 of 159
Title: DBVS AWTE Thermal Load Inventory			
Prepared By: P.S. Lowery	Date: 2.14.06	Checked By: S.R. Pierce	Date: 2.15.06

DBVS AWTE Off-Gas Inlet Line Thermal

Initial guess for temperature distribution ...

$T_1 := (600 + 273.15)K$ $T_{101} := (50 + 273.15)K$

$T_2 := (600 + 273.15)K$ $T_{102} := (50 + 273.15)K$

$T_3 := (600 + 273.15)K$ $T_{103} := (50 + 273.15)K$

$T_4 := (600 + 273.15)K$ $T_{104} := (50 + 273.15)K$

$T_5 := (600 + 273.15)K$ $T_{105} := (50 + 273.15)K$

$T_6 := (600 + 273.15)K$ $T_{106} := (50 + 273.15)K$

$T_7 := (600 + 273.15)K$ $T_{107} := (50 + 273.15)K$

$T_8 := (600 + 273.15)K$ $T_{108} := (50 + 273.15)K$

$T_9 := (600 + 273.15)K$ $T_{109} := (50 + 273.15)K$

$T_{10} := (600 + 273.15)K$ $T_{110} := (50 + 273.15)K$

$T_{11} := (600 + 273.15)K$ $T_{111} := (50 + 273.15)K$

$T_{12} := (600 + 273.15)K$ $T_{112} := (50 + 273.15)K$

Set-up a vector of heat sink values for direct cooling of each of the 12 segments used to model the chute. This energy will be removed directly from its associated chute segment in the model. For example. An entry of x in vector element $q_{cool}[5]$ will remove x Watts of from that segment.

$$q_{cool} := \begin{pmatrix} 0W \\ 0W \\ 0W \\ 0W \\ 0W \\ 0W \\ 0W \\ 0W \\ 0W \\ 0W \\ 0W \\ 0W \end{pmatrix}$$

This feature is not used in the model

Page 4

A.R.E.S. CORPORATION	CALCULATION SHEET		
Project No. 0509206.01	Calculation No. 0509206.01-M-004	Rev. No. 1	Page No. 121 of 159
Title: DBVS AWTE Thermal Load Inventory			
Prepared By: P.S. Lowery	Date: 2.14.06	Checked By: S.R. Pierce	Date: 2.15.06

DBVS AWTE Off-Gas Inlet Line Thermal

Given

First define the energy balance equations for the steel chute elements ...

$$\frac{T_2 - 2\cdot T_1 + T_0}{s^2} - \frac{\xi_V}{k_{stl}\cdot t}\left(\left|T_1 - T_{room}\right|\right)^{\frac{1}{3}}\cdot\left(T_1 - T_{room}\right) - \frac{h_{mdot}}{k_{stl}\cdot t}\left(T_1 - T_{101}\right) - \qquad = 0$$

$$+ 0 - \frac{\sigma\cdot\varepsilon_{stl}}{k_{stl}\cdot t}\left(T_1^{\,4} - T_{room}^{\,4}\right) - \frac{\sigma}{k_{stl}\cdot t}\cdot\frac{T_1^{\,4} - T_M^{\,4}}{\left(\frac{1-\varepsilon_{stl}}{\varepsilon_{stl}}\right) + \frac{1}{F_{1M}} + \left(\frac{1-\varepsilon_M}{\varepsilon_M\cdot A_M}\right)} -$$

$$+ 0 - \frac{\sigma}{k_{stl}\cdot t}\cdot\frac{T_1^{\,4} - T_2^{\,4}}{\left(\frac{1-\varepsilon_{stl}}{\varepsilon_{stl}}\right) + \frac{1}{F_{1,2}} + \left(\frac{1-\varepsilon_{stl}}{\varepsilon_{stl}}\right)} - \frac{\sigma}{k_{stl}\cdot t}\cdot\frac{T_1^{\,4} - T_3^{\,4}}{\left(\frac{1-\varepsilon_{stl}}{\varepsilon_{stl}}\right) + \frac{1}{F_{1,3}} + \left(\frac{1-\varepsilon_{stl}}{\varepsilon_{stl}}\right)} -$$

$$+ 0 - \frac{\sigma}{k_{stl}\cdot t}\cdot\frac{T_1^{\,4} - T_4^{\,4}}{\left(\frac{1-\varepsilon_{stl}}{\varepsilon_{stl}}\right) + \frac{1}{F_{1,4}} + \left(\frac{1-\varepsilon_{stl}}{\varepsilon_{stl}}\right)} - \frac{q_{cool_1}}{\pi\cdot k_{stl}\cdot D_{i\cdot 5}}$$

$$\frac{T_3 - 2\cdot T_2 + T_1}{s^2} - \frac{\xi_V}{k_{stl}\cdot t}\left(\left|T_2 - T_{room}\right|\right)^{\frac{1}{3}}\cdot\left(T_2 - T_{room}\right) - \frac{h_{mdot}}{k_{stl}\cdot t}\left(T_2 - T_{102}\right) - \qquad = 0$$

$$+ 0 - \frac{\sigma\cdot\varepsilon_{stl}}{k_{stl}\cdot t}\left(T_2^{\,4} - T_{room}^{\,4}\right) - \frac{\sigma}{k_{stl}\cdot t}\cdot\frac{T_2^{\,4} - T_M^{\,4}}{\left(\frac{1-\varepsilon_{stl}}{\varepsilon_{stl}}\right) + \frac{1}{F_{2M}} + \left(\frac{1-\varepsilon_M}{\varepsilon_M\cdot A_M}\right)} -$$

$$+ 0 - \frac{\sigma}{k_{stl}\cdot t}\cdot\frac{T_2^{\,4} - T_1^{\,4}}{\left(\frac{1-\varepsilon_{stl}}{\varepsilon_{stl}}\right) + \frac{1}{F_{2,1}} + \left(\frac{1-\varepsilon_{stl}}{\varepsilon_{stl}}\right)} - \frac{\sigma}{k_{stl}\cdot t}\cdot\frac{T_2^{\,4} - T_3^{\,4}}{\left(\frac{1-\varepsilon_{stl}}{\varepsilon_{stl}}\right) + \frac{1}{F_{2,3}} + \left(\frac{1-\varepsilon_{stl}}{\varepsilon_{stl}}\right)} -$$

$$+ 0 - \frac{\sigma}{k_{stl}\cdot t}\cdot\frac{T_2^{\,4} - T_4^{\,4}}{\left(\frac{1-\varepsilon_{stl}}{\varepsilon_{stl}}\right) + \frac{1}{F_{2,4}} + \left(\frac{1-\varepsilon_{stl}}{\varepsilon_{stl}}\right)} - \frac{\sigma}{k_{stl}\cdot t}\cdot\frac{T_2^{\,4} - T_5^{\,4}}{\left(\frac{1-\varepsilon_{stl}}{\varepsilon_{stl}}\right) + \frac{1}{F_{2,5}} + \left(\frac{1-\varepsilon_{stl}}{\varepsilon_{stl}}\right)} - \frac{q_{cool_2}}{\pi\cdot k_{stl}\cdot D_{i\cdot 5}}$$

	CALCULATION SHEET		
Project No. 0509206.01	Calculation No. 0509206.01-M-004	Rev. No. 1	Page No. 122 of 159
Title: DBVS AWTE Thermal Load Inventory			
Prepared By: P.S. Lowery	Date: 2.14.06	Checked By: S.R. Pierce	Date: 2.15.06

DBVS AWTE Off-Gas Inlet Line Thermal

$$\frac{T_4 - 2\cdot T_3 + T_2}{\delta^2} - \frac{\xi_V}{k_{stl}\cdot t}\cdot\left(\left|T_3 - T_{room}\right|\right)^{\frac{1}{3}}\cdot\left(T_3 - T_{room}\right) - \frac{h_{mdot}}{k_{stl}\cdot t}\cdot\left(T_3 - T_{103}\right) - \qquad = 0$$

$$+ 0 - \frac{\sigma\cdot\varepsilon_{stl}}{k_{stl}\cdot t}\left(T_3^{\,4} - T_{room}^{\,4}\right) - \frac{\sigma}{k_{stl}\cdot t}\cdot\frac{T_3^{\,4} - T_M^{\,4}}{\left(\frac{1-\varepsilon_{stl}}{\varepsilon_{stl}}\right) + \frac{1}{F_{3M}} + \left(\frac{1-\varepsilon_M}{\varepsilon_M\cdot A_M}\right)} -$$

$$+ 0 - \frac{\sigma}{k_{stl}\cdot t}\cdot\frac{T_3^{\,4} - T_1^{\,4}}{\left(\frac{1-\varepsilon_{stl}}{\varepsilon_{stl}}\right) + \frac{1}{F_{3,1}} + \left(\frac{1-\varepsilon_{stl}}{\varepsilon_{stl}}\right)} - \frac{\sigma}{k_{stl}\cdot t}\cdot\frac{T_3^{\,4} - T_2^{\,4}}{\left(\frac{1-\varepsilon_{stl}}{\varepsilon_{stl}}\right) + \frac{1}{F_{3,2}} + \left(\frac{1-\varepsilon_{stl}}{\varepsilon_{stl}}\right)} -$$

$$+ 0 - \frac{\sigma}{k_{stl}\cdot t}\cdot\frac{T_3^{\,4} - T_4^{\,4}}{\left(\frac{1-\varepsilon_{stl}}{\varepsilon_{stl}}\right) + \frac{1}{F_{3,4}} + \left(\frac{1-\varepsilon_{stl}}{\varepsilon_{stl}}\right)} - \frac{\sigma}{k_{stl}\cdot t}\cdot\frac{T_3^{\,4} - T_5^{\,4}}{\left(\frac{1-\varepsilon_{stl}}{\varepsilon_{stl}}\right) + \frac{1}{F_{3,5}} + \left(\frac{1-\varepsilon_{stl}}{\varepsilon_{stl}}\right)} -$$

$$+ 0 - \frac{\sigma}{k_{stl}\cdot t}\cdot\frac{T_3^{\,4} - T_6^{\,4}}{\left(\frac{1-\varepsilon_{stl}}{\varepsilon_{stl}}\right) + \frac{1}{F_{3,6}} + \left(\frac{1-\varepsilon_{stl}}{\varepsilon_{stl}}\right)} - \frac{q_{cool_3}}{\pi\cdot k_{stl}\cdot D\cdot t\cdot\delta}$$

$$\frac{T_5 - 2\cdot T_4 + T_3}{\delta^2} - \frac{\xi_V}{k_{stl}\cdot t}\cdot\left(\left|T_4 - T_{room}\right|\right)^{\frac{1}{3}}\cdot\left(T_4 - T_{room}\right) - \frac{h_{mdot}}{k_{stl}\cdot t}\cdot\left(T_4 - T_{104}\right) - \qquad = 0$$

$$+ 0 - \frac{\sigma\cdot\varepsilon_{stl}}{k_{stl}\cdot t}\left(T_4^{\,4} - T_{room}^{\,4}\right) - \frac{\sigma}{k_{stl}\cdot t}\cdot\frac{T_4^{\,4} - T_M^{\,4}}{\left(\frac{1-\varepsilon_{stl}}{\varepsilon_{stl}}\right) + \frac{1}{F_{4M}} + \left(\frac{1-\varepsilon_M}{\varepsilon_M\cdot A_M}\right)} -$$

$$+ 0 - \frac{\sigma}{k_{stl}\cdot t}\cdot\frac{T_4^{\,4} - T_1^{\,4}}{\left(\frac{1-\varepsilon_{stl}}{\varepsilon_{stl}}\right) + \frac{1}{F_{4,1}} + \left(\frac{1-\varepsilon_{stl}}{\varepsilon_{stl}}\right)} - \frac{\sigma}{k_{stl}\cdot t}\cdot\frac{T_4^{\,4} - T_2^{\,4}}{\left(\frac{1-\varepsilon_{stl}}{\varepsilon_{stl}}\right) + \frac{1}{F_{4,2}} + \left(\frac{1-\varepsilon_{stl}}{\varepsilon_{stl}}\right)} -$$

$$+ 0 - \frac{\sigma}{k_{stl}\cdot t}\cdot\frac{T_4^{\,4} - T_3^{\,4}}{\left(\frac{1-\varepsilon_{stl}}{\varepsilon_{stl}}\right) + \frac{1}{F_{4,3}} + \left(\frac{1-\varepsilon_{stl}}{\varepsilon_{stl}}\right)} - \frac{\sigma}{k_{stl}\cdot t}\cdot\frac{T_4^{\,4} - T_5^{\,4}}{\left(\frac{1-\varepsilon_{stl}}{\varepsilon_{stl}}\right) + \frac{1}{F_{4,5}} + \left(\frac{1-\varepsilon_{stl}}{\varepsilon_{stl}}\right)} -$$

$$+ 0 - \frac{\sigma}{k_{stl}\cdot t}\cdot\frac{T_4^{\,4} - T_6^{\,4}}{\left(\frac{1-\varepsilon_{stl}}{\varepsilon_{stl}}\right) + \frac{1}{F_{4,6}} + \left(\frac{1-\varepsilon_{stl}}{\varepsilon_{stl}}\right)} - \frac{\sigma}{k_{stl}\cdot t}\cdot\frac{T_4^{\,4} - T_7^{\,4}}{\left(\frac{1-\varepsilon_{stl}}{\varepsilon_{stl}}\right) + \frac{1}{F_{4,7}} + \left(\frac{1-\varepsilon_{stl}}{\varepsilon_{stl}}\right)} \quad \frac{q_{cool_4}}{\pi\cdot k_{stl}\cdot D\cdot t\cdot\delta}$$

ARES CORPORATION	CALCULATION SHEET		
Project No. 0509206.01	Calculation No. 0509206.01-M-004	Rev. No. 1	Page No. 123 of 159
Title: DBVS AWTE Thermal Load Inventory			
Prepared By: P.S. Lowery	Date: 2.14.06	Checked By: S.R. Pierce	Date: 2.15.06

DBVS AWTE Off-Gas Inlet Line Thermal

$$\frac{T_6 - 2\cdot T_5 + T_4}{\delta^2} - \frac{\xi_V}{k_{stl}\cdot t}\left(\left|T_5 - T_{room}\right|\right)^{\frac{1}{3}}\cdot\left(T_5 - T_{room}\right) - \frac{h_{mdot}}{k_{stl}\cdot t}\left(T_5 - T_{105}\right) \cdots = 0$$

$$+0 - \frac{\sigma\cdot\varepsilon_{stl}}{k_{stl}\cdot t}\left(T_5^{\,4} - T_{room}^{\,4}\right) - \frac{\sigma}{k_{stl}\cdot t}\cdot\frac{T_5^{\,4} - T_M^{\,4}}{\left(\frac{1-\varepsilon_{stl}}{\varepsilon_{stl}}\right) + \frac{1}{F_{5M}} + \left(\frac{1-\varepsilon_M}{\varepsilon_M\cdot A_M}\right)} \cdots$$

$$+0 - \frac{\sigma}{k_{stl}\cdot t}\cdot\frac{T_5^{\,4} - T_2^{\,4}}{\left(\frac{1-\varepsilon_{stl}}{\varepsilon_{stl}}\right) + \frac{1}{F_{5,2}} + \left(\frac{1-\varepsilon_{stl}}{\varepsilon_{stl}}\right)} \cdots$$

$$+0 - \frac{\sigma}{k_{stl}\cdot t}\cdot\frac{T_5^{\,4} - T_3^{\,4}}{\left(\frac{1-\varepsilon_{stl}}{\varepsilon_{stl}}\right) + \frac{1}{F_{5,3}} + \left(\frac{1-\varepsilon_{stl}}{\varepsilon_{stl}}\right)} - \frac{\sigma}{k_{stl}\cdot t}\cdot\frac{T_5^{\,4} - T_4^{\,4}}{\left(\frac{1-\varepsilon_{stl}}{\varepsilon_{stl}}\right) + \frac{1}{F_{5,4}} + \left(\frac{1-\varepsilon_{stl}}{\varepsilon_{stl}}\right)} \cdots$$

$$+0 - \frac{\sigma}{k_{stl}\cdot t}\cdot\frac{T_5^{\,4} - T_6^{\,4}}{\left(\frac{1-\varepsilon_{stl}}{\varepsilon_{stl}}\right) + \frac{1}{F_{5,6}} + \left(\frac{1-\varepsilon_{stl}}{\varepsilon_{stl}}\right)} - \frac{\sigma}{k_{stl}\cdot t}\cdot\frac{T_5^{\,4} - T_7^{\,4}}{\left(\frac{1-\varepsilon_{stl}}{\varepsilon_{stl}}\right) + \frac{1}{F_{5,7}} + \left(\frac{1-\varepsilon_{stl}}{\varepsilon_{stl}}\right)} \cdots$$

$$+0 - \frac{\sigma}{k_{stl}\cdot t}\cdot\frac{T_5^{\,4} - T_8^{\,4}}{\left(\frac{1-\varepsilon_{stl}}{\varepsilon_{stl}}\right) + \frac{1}{F_{5,8}} + \left(\frac{1-\varepsilon_{stl}}{\varepsilon_{stl}}\right)} - \frac{q_{cool_5}}{\pi\cdot k_{stl}\cdot D\cdot t\cdot\delta}$$

Page 7

Calculation Sheet: QAP 3.1, Rev. 6 (11-15-05)

A&E S CORPORATION	CALCULATION SHEET		
Project No. 0509206.01	Calculation No. 0509206.01-M-004	Rev. No. 1	Page No. 124 of 159
Title: DBVS AWTE Thermal Load Inventory			
Prepared By: P.S. Lowery	Date: 2.14.06	Checked By: S.R. Pierce	Date: 2.15.06

$$\frac{T_7 - 2\cdot T_6 + T_5}{\delta^2} - \frac{\xi_V}{k_{stl}\cdot t}\cdot\left(\left|T_6 - T_{room}\right|\right)^{\frac{1}{3}}\cdot\left(T_6 - T_{room}\right) - \frac{h_{mdot}}{k_{stl}\cdot t}\cdot\left(T_6 - T_{106}\right) - \qquad = 0$$

$$+0 - \frac{\sigma\cdot\varepsilon_{stl}}{k_{stl}\cdot t}\left(T_6^{\,4} - T_{room}^{\,4}\right) - \frac{\sigma}{k_{stl}\cdot t}\cdot\frac{T_6^{\,4} - T_3^{\,4}}{\left(\frac{1-\varepsilon_{stl}}{\varepsilon_{stl}}\right) + \frac{1}{F_{6,3}} + \left(\frac{1-\varepsilon_{stl}}{\varepsilon_{stl}}\right)} -$$

$$+0 - \frac{\sigma}{k_{stl}\cdot t}\cdot\frac{T_6^{\,4} - T_4^{\,4}}{\left(\frac{1-\varepsilon_{stl}}{\varepsilon_{stl}}\right) + \frac{1}{F_{6,4}} + \left(\frac{1-\varepsilon_{stl}}{\varepsilon_{stl}}\right)} - \frac{\sigma}{k_{stl}\cdot t}\cdot\frac{T_6^{\,4} - T_5^{\,4}}{\left(\frac{1-\varepsilon_{stl}}{\varepsilon_{stl}}\right) + \frac{1}{F_{6,5}} + \left(\frac{1-\varepsilon_{stl}}{\varepsilon_{stl}}\right)} -$$

$$+0 - \frac{\sigma}{k_{stl}\cdot t}\cdot\frac{T_6^{\,4} - T_7^{\,4}}{\left(\frac{1-\varepsilon_{stl}}{\varepsilon_{stl}}\right) + \frac{1}{F_{6,7}} + \left(\frac{1-\varepsilon_{stl}}{\varepsilon_{stl}}\right)} - \frac{\sigma}{k_{stl}\cdot t}\cdot\frac{T_6^{\,4} - T_8^{\,4}}{\left(\frac{1-\varepsilon_{stl}}{\varepsilon_{stl}}\right) + \frac{1}{F_{6,8}} + \left(\frac{1-\varepsilon_{stl}}{\varepsilon_{stl}}\right)} -$$

$$+0 - \frac{\sigma}{k_{stl}\cdot t}\cdot\frac{T_6^{\,4} - T_9^{\,4}}{\left(\frac{1-\varepsilon_{stl}}{\varepsilon_{stl}}\right) + \frac{1}{F_{6,9}} + \left(\frac{1-\varepsilon_{stl}}{\varepsilon_{stl}}\right)} - \frac{q_{cond_6}}{\pi k_{stl}\cdot D\cdot t\cdot\delta}$$

$$\frac{T_8 - 2\cdot T_7 + T_6}{\delta^2} - \frac{\xi_V}{k_{stl}\cdot t}\cdot\left(\left|T_7 - T_{room}\right|\right)^{\frac{1}{3}}\cdot\left(T_7 - T_{room}\right) - \frac{h_{mdot}}{k_{stl}\cdot t}\cdot\left(T_7 - T_{107}\right) - \qquad = 0$$

$$+0 - \frac{\sigma\cdot\varepsilon_{stl}}{k_{stl}\cdot t}\left(T_7^{\,4} - T_{room}^{\,4}\right) - \frac{\sigma}{k_{stl}\cdot t}\cdot\frac{T_7^{\,4} - T_4^{\,4}}{\left(\frac{1-\varepsilon_{stl}}{\varepsilon_{stl}}\right) + \frac{1}{F_{7,4}} + \left(\frac{1-\varepsilon_{stl}}{\varepsilon_{stl}}\right)} -$$

$$+0 - \frac{\sigma}{k_{stl}\cdot t}\cdot\frac{T_7^{\,4} - T_5^{\,4}}{\left(\frac{1-\varepsilon_{stl}}{\varepsilon_{stl}}\right) + \frac{1}{F_{7,5}} + \left(\frac{1-\varepsilon_{stl}}{\varepsilon_{stl}}\right)} - \frac{\sigma}{k_{stl}\cdot t}\cdot\frac{T_7^{\,4} - T_6^{\,4}}{\left(\frac{1-\varepsilon_{stl}}{\varepsilon_{stl}}\right) + \frac{1}{F_{7,6}} + \left(\frac{1-\varepsilon_{stl}}{\varepsilon_{stl}}\right)} -$$

$$+0 - \frac{\sigma}{k_{stl}\cdot t}\cdot\frac{T_7^{\,4} - T_8^{\,4}}{\left(\frac{1-\varepsilon_{stl}}{\varepsilon_{stl}}\right) + \frac{1}{F_{7,8}} + \left(\frac{1-\varepsilon_{stl}}{\varepsilon_{stl}}\right)} - \frac{\sigma}{k_{stl}\cdot t}\cdot\frac{T_7^{\,4} - T_9^{\,4}}{\left(\frac{1-\varepsilon_{stl}}{\varepsilon_{stl}}\right) + \frac{1}{F_{7,9}} + \left(\frac{1-\varepsilon_{stl}}{\varepsilon_{stl}}\right)} -$$

$$+0 - \frac{\sigma}{k_{stl}\cdot t}\cdot\frac{T_7^{\,4} - T_{10}^{\,4}}{\left(\frac{1-\varepsilon_{stl}}{\varepsilon_{stl}}\right) + \frac{1}{F_{7,10}} + \left(\frac{1-\varepsilon_{stl}}{\varepsilon_{stl}}\right)} - \frac{q_{cond_7}}{\pi k_{stl}\cdot D\cdot t\cdot\delta}$$

Page 6

ARES CORPORATION	**CALCULATION SHEET**		
Project No. 0509206.01	Calculation No. 0509206.01-M-004	Rev. No. 1	Page No. 125 of 159
Title: DBVS AWTE Thermal Load Inventory			
Prepared By: P.S. Lowery	Date: 2.14.06	Checked By: S.R. Pierce	Date: 2.15.06

$$\frac{T_9 - 2\cdot T_8 + T_7}{\delta^2} - \frac{\xi_V}{k_{stl}\cdot t}\left(\left|T_8 - T_{room}\right|\right)^{\frac{1}{3}}\cdot\left(T_8 - T_{room}\right) - \frac{h_{mdot}}{k_{stl}\cdot t}\left(T_8 - T_{108}\right) - \qquad = 0$$

$$+0 - \frac{\sigma\cdot\varepsilon_{stl}}{k_{stl}\cdot t}\left(T_8^{\,4} - T_{room}^{\,4}\right) - \frac{\sigma}{k_{stl}\cdot t}\cdot\frac{T_8^{\,4} - T_5^{\,4}}{\left(\frac{1-\varepsilon_{stl}}{\varepsilon_{stl}}\right) + \frac{1}{F_{8,5}} + \left(\frac{1-\varepsilon_{stl}}{\varepsilon_{stl}}\right)} -$$

$$+0 - \frac{\sigma}{k_{stl}\cdot t}\cdot\frac{T_8^{\,4} - T_6^{\,4}}{\left(\frac{1-\varepsilon_{stl}}{\varepsilon_{stl}}\right) + \frac{1}{F_{8,6}} + \left(\frac{1-\varepsilon_{stl}}{\varepsilon_{stl}}\right)} - \frac{\sigma}{k_{stl}\cdot t}\cdot\frac{T_8^{\,4} - T_7^{\,4}}{\left(\frac{1-\varepsilon_{stl}}{\varepsilon_{stl}}\right) + \frac{1}{F_{8,7}} + \left(\frac{1-\varepsilon_{stl}}{\varepsilon_{stl}}\right)} -$$

$$+0 - \frac{\sigma}{k_{stl}\cdot t}\cdot\frac{T_8^{\,4} - T_9^{\,4}}{\left(\frac{1-\varepsilon_{stl}}{\varepsilon_{stl}}\right) + \frac{1}{F_{8,9}} + \left(\frac{1-\varepsilon_{stl}}{\varepsilon_{stl}}\right)} - \frac{\sigma}{k_{stl}\cdot t}\cdot\frac{T_8^{\,4} - T_{10}^{\,4}}{\left(\frac{1-\varepsilon_{stl}}{\varepsilon_{stl}}\right) + \frac{1}{F_{8,10}} + \left(\frac{1-\varepsilon_{stl}}{\varepsilon_{stl}}\right)} -$$

$$+0 - \frac{\sigma}{k_{stl}\cdot t}\cdot\frac{T_8^{\,4} - T_{11}^{\,4}}{\left(\frac{1-\varepsilon_{stl}}{\varepsilon_{stl}}\right) + \frac{1}{F_{8,11}} + \left(\frac{1-\varepsilon_{stl}}{\varepsilon_{stl}}\right)} - \frac{q_{cool_8}}{\pi k_{stl}\cdot D\cdot t\cdot\delta}$$

$$\frac{T_{10} - 2\cdot T_9 + T_8}{\delta^2} - \qquad = 0$$

$$+0 - \frac{\xi_V}{k_{stl}\cdot t}\left(\left|T_9 - T_{room}\right|\right)^{\frac{1}{3}}\cdot\left(T_9 - T_{room}\right) - \frac{h_{mdot}}{k_{stl}\cdot t}\left(T_9 - T_{109}\right) -$$

$$+0 - \frac{\sigma\cdot\varepsilon_{stl}}{k_{stl}\cdot t}\left(T_9^{\,4} - T_{room}^{\,4}\right) - \frac{\sigma}{k_{stl}\cdot t}\cdot\frac{T_9^{\,4} - T_6^{\,4}}{\left(\frac{1-\varepsilon_{stl}}{\varepsilon_{stl}}\right) + \frac{1}{F_{9,6}} + \left(\frac{1-\varepsilon_{stl}}{\varepsilon_{stl}}\right)} -$$

$$+0 - \frac{\sigma}{k_{stl}\cdot t}\cdot\frac{T_9^{\,4} - T_7^{\,4}}{\left(\frac{1-\varepsilon_{stl}}{\varepsilon_{stl}}\right) + \frac{1}{F_{9,7}} + \left(\frac{1-\varepsilon_{stl}}{\varepsilon_{stl}}\right)} - \frac{\sigma}{k_{stl}\cdot t}\cdot\frac{T_9^{\,4} - T_8^{\,4}}{\left(\frac{1-\varepsilon_{stl}}{\varepsilon_{stl}}\right) + \frac{1}{F_{9,8}} + \left(\frac{1-\varepsilon_{stl}}{\varepsilon_{stl}}\right)} -$$

$$+0 - \frac{\sigma}{k_{stl}\cdot t}\cdot\frac{T_9^{\,4} - T_{10}^{\,4}}{\left(\frac{1-\varepsilon_{stl}}{\varepsilon_{stl}}\right) + \frac{1}{F_{9,10}} + \left(\frac{1-\varepsilon_{stl}}{\varepsilon_{stl}}\right)} - \frac{\sigma}{k_{stl}\cdot t}\cdot\frac{T_9^{\,4} - T_{11}^{\,4}}{\left(\frac{1-\varepsilon_{stl}}{\varepsilon_{stl}}\right) + \frac{1}{F_{9,11}} + \left(\frac{1-\varepsilon_{stl}}{\varepsilon_{stl}}\right)} -$$

$$+0 - \frac{\sigma}{k_{stl}\cdot t}\cdot\frac{T_9^{\,4} - T_{12}^{\,4}}{\left(\frac{1-\varepsilon_{stl}}{\varepsilon_{stl}}\right) + \frac{1}{F_{9,12}} + \left(\frac{1-\varepsilon_{stl}}{\varepsilon_{stl}}\right)} - \frac{q_{cool_9}}{\pi k_{stl}\cdot D\cdot t\cdot\delta}$$

ARES CORPORATION	CALCULATION SHEET		
Project No. 0509206.01	Calculation No. 0509206.01-M-004	Rev. No. 1	Page No. 126 of 159
Title: DBVS AWTE Thermal Load Inventory			
Prepared By: P.S. Lowery	Date: 2.14.06	Checked By: S.R. Pierce	Date: 2.15.06

$$\frac{T_{11} - 2 \cdot T_{10} + T_9}{\delta^2} - \qquad = 0$$

$$+ 0 - \frac{5V}{k_{stl} \cdot t} \cdot \left(\left|T_{10} - T_{room}\right|\right)^{\frac{1}{3}} \cdot \left(T_{10} - T_{room}\right) - \frac{h_{mdot}}{k_{stl} \cdot t} \cdot \left(T_{10} - T_{110}\right) -$$

$$+ 0 - \frac{\sigma \cdot \varepsilon_{stl}}{k_{stl} \cdot t} \cdot \left(T_{10}^{\,4} - T_{room}^{\,4}\right) - \frac{\sigma}{k_{stl} \cdot t} \cdot \frac{T_{10}^{\,4} - T_7^{\,4}}{\left(\frac{1 - \varepsilon_{stl}}{\varepsilon_{stl}}\right) + \frac{1}{F_{10,7}} + \left(\frac{1 - \varepsilon_{stl}}{\varepsilon_{stl}}\right)} -$$

$$+ 0 - \frac{\sigma}{k_{stl} \cdot t} \cdot \frac{T_{10}^{\,4} - T_8^{\,4}}{\left(\frac{1 - \varepsilon_{stl}}{\varepsilon_{stl}}\right) + \frac{1}{F_{10,8}} + \left(\frac{1 - \varepsilon_{stl}}{\varepsilon_{stl}}\right)} - \frac{\sigma}{k_{stl} \cdot t} \cdot \frac{T_{10}^{\,4} - T_9^{\,4}}{\left(\frac{1 - \varepsilon_{stl}}{\varepsilon_{stl}}\right) + \frac{1}{F_{10,9}} + \left(\frac{1 - \varepsilon_{stl}}{\varepsilon_{stl}}\right)} -$$

$$+ 0 - \frac{\sigma}{k_{stl} \cdot t} \cdot \frac{T_{10}^{\,4} - T_{11}^{\,4}}{\left(\frac{1 - \varepsilon_{stl}}{\varepsilon_{stl}}\right) + \frac{1}{F_{10,11}} + \left(\frac{1 - \varepsilon_{stl}}{\varepsilon_{stl}}\right)} - \frac{\sigma}{k_{stl} \cdot t} \cdot \frac{T_{10}^{\,4} - T_{12}^{\,4}}{\left(\frac{1 - \varepsilon_{stl}}{\varepsilon_{stl}}\right) + \frac{1}{F_{10,12}} + \left(\frac{1 - \varepsilon_{stl}}{\varepsilon_{stl}}\right)} - \frac{q_{cool_{10}}}{\pi k_{stl} \cdot D \cdot t \cdot \delta}$$

$$\frac{T_{12} - 2 \cdot T_{11} + T_{10}}{\delta^2} - \qquad = 0$$

$$+ 0 - \frac{5V}{k_{stl} \cdot t} \cdot \left(\left|T_{11} - T_{room}\right|\right)^{\frac{1}{3}} \cdot \left(T_{11} - T_{room}\right) - \frac{h_{mdot}}{k_{stl} \cdot t} \cdot \left(T_{11} - T_{111}\right) -$$

$$+ 0 - \frac{\sigma \cdot \varepsilon_{stl}}{k_{stl} \cdot t} \cdot \left(T_{11}^{\,4} - T_{room}^{\,4}\right) - \frac{\sigma}{k_{stl} \cdot t} \cdot \frac{T_{11}^{\,4} - T_8^{\,4}}{\left(\frac{1 - \varepsilon_{stl}}{\varepsilon_{stl}}\right) + \frac{1}{F_{11,8}} + \left(\frac{1 - \varepsilon_{stl}}{\varepsilon_{stl}}\right)} -$$

$$+ 0 - \frac{\sigma}{k_{stl} \cdot t} \cdot \frac{T_{11}^{\,4} - T_9^{\,4}}{\left(\frac{1 - \varepsilon_{stl}}{\varepsilon_{stl}}\right) + \frac{1}{F_{11,9}} + \left(\frac{1 - \varepsilon_{stl}}{\varepsilon_{stl}}\right)} - \frac{\sigma}{k_{stl} \cdot t} \cdot \frac{T_{11}^{\,4} - T_{10}^{\,4}}{\left(\frac{1 - \varepsilon_{stl}}{\varepsilon_{stl}}\right) + \frac{1}{F_{11,10}} + \left(\frac{1 - \varepsilon_{stl}}{\varepsilon_{stl}}\right)} -$$

$$+ 0 - \frac{\sigma}{k_{stl} \cdot t} \cdot \frac{T_{11}^{\,4} - T_{12}^{\,4}}{\left(\frac{1 - \varepsilon_{stl}}{\varepsilon_{stl}}\right) + \frac{1}{F_{11,12}} + \left(\frac{1 - \varepsilon_{stl}}{\varepsilon_{stl}}\right)} - \frac{q_{cool_{11}}}{\pi k_{stl} \cdot D \cdot t \cdot \delta}$$

A&E S CORPORATION	CALCULATION SHEET		
Project No. 0509206.01	Calculation No. 0509206.01-M-004	Rev. No. 1	Page No. 127 of 159
Title: DBVS AWTE Thermal Load Inventory			
Prepared By: P.S. Lowery	Date: 2.14.06	Checked By: S.R. Pierce	Date: 2.15.06

$$\frac{T_{12} - T_{11}}{\delta^2} - \qquad = 0$$

$$+ 0 - \frac{\xi_V}{k_{stl} \cdot t}\cdot\left(\left|T_{12} - T_{room}\right|\right)^{\frac{1}{3}}\cdot\left(T_{12} - T_{room}\right) - \frac{h_{mdot}}{k_{stl} \cdot t}\cdot\left(T_{12} - T_{112}\right) -$$

$$+ 0 - \frac{\sigma \cdot \epsilon_{stl}}{k_{stl} \cdot t}\left(T_{12}^{\ 4} - T_{room}^{\ 4}\right) - \frac{\sigma}{k_{stl} \cdot t}\cdot\frac{T_{12}^{\ 4} - T_9^{\ 4}}{\left(\frac{1 - \epsilon_{stl}}{\epsilon_{stl}}\right) + \frac{1}{F_{12,9}} + \left(\frac{1 - \epsilon_{stl}}{\epsilon_{stl}}\right)} -$$

$$+ 0 - \frac{\sigma}{k_{stl} \cdot t}\cdot\frac{T_{12}^{\ 4} - T_{10}^{\ 4}}{\left(\frac{1 - \epsilon_{stl}}{\epsilon_{stl}}\right) + \frac{1}{F_{12,10}} + \left(\frac{1 - \epsilon_{stl}}{\epsilon_{stl}}\right)} - \frac{\sigma}{k_{stl} \cdot t}\cdot\frac{T_{12}^{\ 4} - T_{11}^{\ 4}}{\left(\frac{1 - \epsilon_{stl}}{\epsilon_{stl}}\right) + \frac{1}{F_{12,11}} + \left(\frac{1 - \epsilon_{stl}}{\epsilon_{stl}}\right)} - \frac{q_{cool_{12}}}{\pi \cdot k_{stl} \cdot D \cdot t \cdot \delta}$$

Now define the energy equations for the air column elements ...

$$\frac{T_{102} - 2 \cdot T_{101} + T_0}{\delta^2} - \frac{4 \cdot h_{mdot}}{k_A \cdot D}\cdot\left(T_{101} - T_1\right) + \frac{4 m_{dot} \cdot C_p}{\pi \cdot k_A \cdot D^2 \cdot \delta}\cdot\left(T_{102} - T_{101}\right) = 0$$

$$\frac{T_{103} - 2 \cdot T_{102} + T_{101}}{\delta^2} - \frac{4 \cdot h_{mdot}}{k_A \cdot D}\cdot\left(T_{102} - T_2\right) + \frac{4 m_{dot} \cdot C_p}{\pi \cdot k_A \cdot D^2 \cdot \delta}\cdot\left(T_{103} - T_{102}\right) = 0$$

$$\frac{T_{104} - 2 \cdot T_{103} + T_{102}}{\delta^2} - \frac{4 \cdot h_{mdot}}{k_A \cdot D}\cdot\left(T_{103} - T_3\right) + \frac{4 m_{dot} \cdot C_p}{\pi \cdot k_A \cdot D^2 \cdot \delta}\cdot\left(T_{104} - T_{103}\right) = 0$$

$$\frac{T_{105} - 2 \cdot T_{104} + T_{103}}{\delta^2} - \frac{4 \cdot h_{mdot}}{k_A \cdot D}\cdot\left(T_{104} - T_4\right) + \frac{4 m_{dot} \cdot C_p}{\pi \cdot k_A \cdot D^2 \cdot \delta}\cdot\left(T_{105} - T_{104}\right) = 0$$

ARES CORPORATION	CALCULATION SHEET		
Project No. 0509206.01	Calculation No. 0509206.01-M-004	Rev. No. 1	Page No. 128 of 159
Title: DBVS AWTE Thermal Load Inventory			
Prepared By: P.S. Lowery	Date: 2.14.06	Checked By: S.R. Pierce	Date: 2.15.06

DBVS AWTE Off-Gas Inlet Line Thermal

$$\frac{T_{106} - 2\cdot T_{105} + T_{104}}{s^2} - \frac{4\cdot h_{mdot}}{k_A\cdot D}\cdot\left(T_{105} - T_5\right) + \frac{4m_{dot}\cdot C_P}{\pi\cdot k_A\cdot D^2\cdot\delta}\cdot\left(T_{106} - T_{105}\right) = 0$$

$$\frac{T_{107} - 2\cdot T_{106} + T_{105}}{s^2} - \frac{4\cdot h_{mdot}}{k_A\cdot D}\cdot\left(T_{106} - T_6\right) + \frac{4m_{dot}\cdot C_P}{\pi\cdot k_A\cdot D^2\cdot\delta}\cdot\left(T_{107} - T_{106}\right) = 0$$

$$\frac{T_{108} - 2\cdot T_{107} + T_{106}}{s^2} - \frac{4\cdot h_{mdot}}{k_A\cdot D}\cdot\left(T_{107} - T_7\right) + \frac{4m_{dot}\cdot C_P}{\pi\cdot k_A\cdot D^2\cdot\delta}\cdot\left(T_{108} - T_{107}\right) = 0$$

$$\frac{T_{109} - 2\cdot T_{108} + T_{107}}{s^2} - \frac{4\cdot h_{mdot}}{k_A\cdot D}\cdot\left(T_{108} - T_8\right) + \frac{4m_{dot}\cdot C_P}{\pi\cdot k_A\cdot D^2\cdot\delta}\cdot\left(T_{109} - T_{108}\right) = 0$$

$$\frac{T_{110} - 2\cdot T_{109} + T_{108}}{s^2} - \frac{4\cdot h_{mdot}}{k_A\cdot D}\cdot\left(T_{109} - T_9\right) + \frac{4m_{dot}\cdot C_P}{\pi\cdot k_A\cdot D^2\cdot\delta}\cdot\left(T_{110} - T_{109}\right) = 0$$

$$\frac{T_{111} - 2\cdot T_{110} + T_{109}}{s^2} - \frac{4\cdot h_{mdot}}{k_A\cdot D}\cdot\left(T_{110} - T_{10}\right) + \frac{4m_{dot}\cdot C_P}{\pi\cdot k_A\cdot D^2\cdot\delta}\cdot\left(T_{111} - T_{110}\right) = 0$$

$$\frac{T_{112} - 2\cdot T_{111} + T_{110}}{s^2} - \frac{4\cdot h_{mdot}}{k_A\cdot D}\cdot\left(T_{111} - T_{11}\right) + \frac{4m_{dot}\cdot C_P}{\pi\cdot k_A\cdot D^2\cdot\delta}\cdot\left(T_{112} - T_{111}\right) = 0$$

$$\frac{T_{112} - T_{111}}{s^2} - \frac{4\cdot h_{mdot}}{k_A\cdot D}\cdot\left(T_{112} - T_{12}\right) + \frac{4m_{dot}\cdot C_P}{\pi\cdot k_A\cdot D^2\cdot\delta}\cdot\left(T_{stem} - T_{112}\right) = 0$$

Page 12

CALCULATION SHEET

Project No. 0509206.01	Calculation No. 0509206.01-M-004	Rev. No. 1	Page No. 129 of 159
Title: DBVS AWTE Thermal Load Inventory			
Prepared By: P.S. Lowery	Date: 2.14.06	Checked By: S.R. Pierce	Date: 2.15.06

DBVS AWTE Off-Gas Inlet Line Thermal

$$\begin{pmatrix} T1 \\ T2 \\ T3 \\ T4 \\ T5 \\ T6 \\ T7 \\ T8 \\ T9 \\ T10 \\ T11 \\ T12 \\ T101 \\ T102 \\ T103 \\ T104 \\ T105 \\ T106 \\ T107 \\ T108 \\ T109 \\ T110 \\ T111 \\ T112 \end{pmatrix} := \mathrm{Find}(T_1, T_2, T_3, T_4, T_5, T_6, T_7, T_8, T_9, T_{10}, T_{11}, T_{12}, T_{101}, T_{102}, T_{103}, T_{104}, T_{105}, T_{106}, T_{107}, T_{108}, T_{109}, T_{110}, T$$

Temperatures for the steel chute are ...

T1 = 685.493 K	T1C := KtoC(T1)	T1C = 412.345
T2 = 409.187 K	T2C := KtoC(T2)	T2C = 136.037
T3 = 333.883 K	T3C := KtoC(T3)	T3C = 60.733
T4 = 320.977 K	T4C := KtoC(T4)	T4C = 47.827
T5 = 316.506 K	T5C := KtoC(T5)	T5C = 43.356
T6 = 314.471 K	T6C := KtoC(T6)	T6C = 41.321
T7 = 314.532 K	T7C := KtoC(T7)	T7C = 41.382
T8 = 314.757 K	T8C := KtoC(T8)	T8C = 41.607
T9 = 315.001 K	T9C := KtoC(T9)	T9C = 41.851
T10 = 315.253 K	T10C := KtoC(T10)	T10C = 42.103
T11 = 315.508 K	T11C := KtoC(T11)	T11C = 42.358
T12 = 315.773 K	T12C := KtoC(T12)	T12C = 42.623

ARES CORPORATION	CALCULATION SHEET		
Project No. 0509206.01	Calculation No. 0509206.01-M-004	Rev. No. 1	Page No. 130 of 159
Title: DBVS AWTE Thermal Load Inventory			
Prepared By: P.S. Lowery	Date: 2.14.06	Checked By: S.R. Pierce	Date: 2.15.06

DBVS AWTE Off-Gas Inlet Line Thermal

Temperature for the air column inside the chute are ...

T101 = 344.677 K	T101C := KtoC(T101)	T101C = 71.527
T102 = 325.743 K	T102C := KtoC(T102)	T102C = 52.593
T103 = 321.108 K	T103C := KtoC(T103)	T103C = 47.958
T104 = 320.398 K	T104C := KtoC(T104)	T104C = 47.248
T105 = 320.366 K	T105C := KtoC(T105)	T105C = 47.216
T106 = 320.58 K	T106C := KtoC(T106)	T106C = 47.43
T107 = 320.92 K	T107C := KtoC(T107)	T107C = 47.77
T108 = 321.274 K	T108C := KtoC(T108)	T108C = 48.124
T109 = 321.636 K	T109C := KtoC(T109)	T109C = 48.486
T110 = 322.005 K	T110C := KtoC(T110)	T110C = 48.855
T111 = 322.38 K	T111C := KtoC(T111)	T111C = 49.23
T112 = 322.762 K	T112C := KtoC(T112)	T112C = 49.612

$$T_{plot} := \begin{pmatrix} T1C \\ T2C \\ T3C \\ T4C \\ T5C \\ T6C \\ T7C \\ T8C \\ T9C \\ T10C \\ T11C \\ T12C \end{pmatrix} \qquad zplot := \begin{pmatrix} 0.5 \\ 1.5 \\ 2.5 \\ 3.5 \\ 4.5 \\ 5.5 \\ 6.5 \\ 7.5 \\ 8.5 \\ 9.5 \\ 10.5 \\ 11.5 \end{pmatrix}$$

Page 14

Calculation Sheet. QAP 3.1. Rev. 6 (11-15-05)

ARES CORPORATION	**CALCULATION SHEET**		
Project No. 0509206.01	Calculation No. 0509206.01-M-004	Rev. No. 1	Page No. 131 of 159
Title: DBVS AWTE Thermal Load Inventory			
Prepared By: P.S. Lowery	Date: 2.14.06	Checked By: S.R. Pierce	Date: 2.15.06

DBVS AWTE Off-Gas Inlet Line Thermal

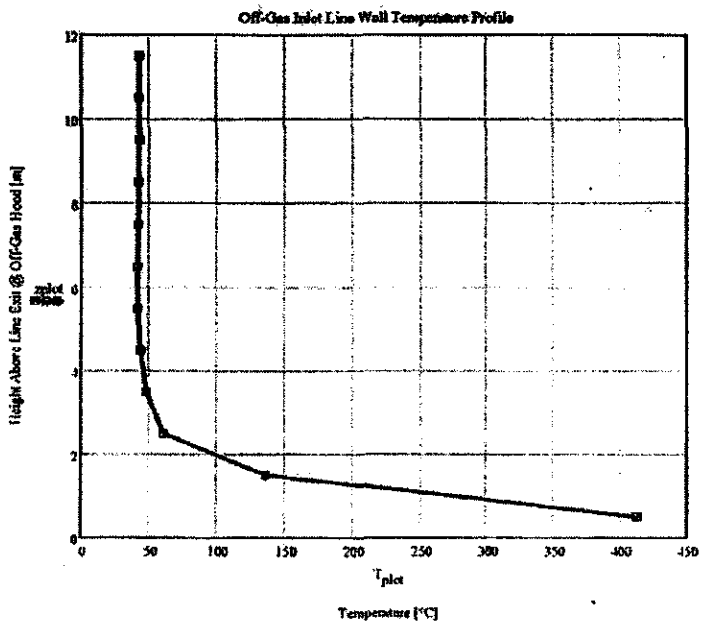

Page 15

ARES CORPORATION	**CALCULATION SHEET**		
Project No. 0509206.01	Calculation No. 0509206.01-M-004	Rev. No. 1	Page No. 132 of 159
Title: DBVS AWTE Thermal Load Inventory			
Prepared By: P.S. Lowery	Date: 2.14.06	Checked By: S.R. Pierce	Date: 2.15.06

DBVS AWTE Off-Gas Inlet Line Thermal

Now compute the heat loss from the chute to the AWTE room ...

$$Q := \begin{bmatrix} \pi \cdot D \cdot \delta \left[\xi_V \left(\left| T1 - T_{room} \right| \right)^{\frac{1}{3}} \cdot \left(T1 - T_{room} \right) + \sigma \cdot \varepsilon_{stl} \left(T1^4 - T_{room}^4 \right) \right] \\ \pi \cdot D \cdot \delta \left[\xi_V \left(\left| T2 - T_{room} \right| \right)^{\frac{1}{3}} \cdot \left(T2 - T_{room} \right) + \sigma \cdot \varepsilon_{stl} \left(T2^4 - T_{room}^4 \right) \right] \\ \pi \cdot D \cdot \delta \left[\xi_V \left(\left| T3 - T_{room} \right| \right)^{\frac{1}{3}} \cdot \left(T3 - T_{room} \right) + \sigma \cdot \varepsilon_{stl} \left(T3^4 - T_{room}^4 \right) \right] \\ \pi \cdot D \cdot \delta \left[\xi_V \left(\left| T4 - T_{room} \right| \right)^{\frac{1}{3}} \cdot \left(T4 - T_{room} \right) + \sigma \cdot \varepsilon_{stl} \left(T4^4 - T_{room}^4 \right) \right] \\ \pi \cdot D \cdot \delta \left[\xi_V \left(\left| T5 - T_{room} \right| \right)^{\frac{1}{3}} \cdot \left(T5 - T_{room} \right) + \sigma \cdot \varepsilon_{stl} \left(T5^4 - T_{room}^4 \right) \right] \\ \pi \cdot D \cdot \delta \left[\xi_V \left(\left| T6 - T_{room} \right| \right)^{\frac{1}{3}} \cdot \left(T6 - T_{room} \right) + \sigma \cdot \varepsilon_{stl} \left(T6^4 - T_{room}^4 \right) \right] \\ \pi \cdot D \cdot \delta \left[\xi_V \left(\left| T7 - T_{room} \right| \right)^{\frac{1}{3}} \cdot \left(T7 - T_{room} \right) + \sigma \cdot \varepsilon_{stl} \left(T7^4 - T_{room}^4 \right) \right] \\ \pi \cdot D \cdot \delta \left[\xi_V \left(\left| T8 - T_{room} \right| \right)^{\frac{1}{3}} \cdot \left(T8 - T_{room} \right) + \sigma \cdot \varepsilon_{stl} \left(T8^4 - T_{room}^4 \right) \right] \\ \pi \cdot D \cdot \delta \left[\xi_V \left(\left| T9 - T_{room} \right| \right)^{\frac{1}{3}} \cdot \left(T9 - T_{room} \right) + \sigma \cdot \varepsilon_{stl} \left(T9^4 - T_{room}^4 \right) \right] \\ \pi \cdot D \cdot \delta \left[\xi_V \left(\left| T10 - T_{room} \right| \right)^{\frac{1}{3}} \cdot \left(T10 - T_{room} \right) + \sigma \cdot \varepsilon_{stl} \left(T10^4 - T_{room}^4 \right) \right] \\ \pi \cdot D \cdot \delta \left[\xi_V \left(\left| T11 - T_{room} \right| \right)^{\frac{1}{3}} \cdot \left(T11 - T_{room} \right) + \sigma \cdot \varepsilon_{stl} \left(T11^4 - T_{room}^4 \right) \right] \\ \pi \cdot D \cdot \delta \left[\xi_V \left(\left| T12 - T_{room} \right| \right)^{\frac{1}{3}} \cdot \left(T12 - T_{room} \right) + \sigma \cdot \varepsilon_{stl} \left(T12^4 - T_{room}^4 \right) \right] \end{bmatrix}$$

ARES CORPORATION	**CALCULATION SHEET**		
Project No. 0509206.01	Calculation No. 0509206.01-M-004	Rev. No. 1	Page No. 133 of 159
Title: DBVS AWTE Thermal Load Inventory			
Prepared By: P.S. Lowery	Date: 2.14.06	Checked By: S.R. Pierce	Date: 2.15.06

DBVS AWTE Off-Gas Inlet Line Thermal

	i	1
	1	$2.041 \cdot 10^{3}$
	2	244.399
	3	54.496
	4	31.55
	5	24.831
Q =	6	21.18 W
	7	21.273
	8	21.617
	9	21.993
	10	22.38
	11	22.774
	12	23.169

Compute the total heat load to the AWTE room ...

$$Q_{sum} := \sum_{n=1}^{12} Q_n \qquad Q_{sum} = 2.55\,kW$$

ARES CORPORATION	CALCULATION SHEET		
Project No. 0509206.01	Calculation No. 0509206.01-M-004	Rev. No. 1	Page No. 134 of 159
Title: DBVS AWTE Thermal Load Inventory			
Prepared By: P.S. Lowery	Date: 2.14.06	Checked By: S.R. Pierce	Date: 2.15.06

APPENDIX F

MATHCAD MODEL TO ESTIMATE THE TEMPERATURE DISTRIBUTION AND HEAT LOSS OFF THE OFF-GAS EXHAUST LINE IN THE AWTE

ARES CORPORATION	CALCULATION SHEET		
Project No. 0509206.01	Calculation No. 0509206.01-M-004	Rev. No. 1	Page No. 135 of 159
Title: DBVS AWTE Thermal Load Inventory			
Prepared By: P.S. Lowery	Date: 2.14.06	Checked By: S.R. Pierce	Date: 2.15.06

DBVS AWTE Off-Gas Exhaust Line Thermal

°C ≡ 1 °F ≡ 1

$KtoC(x) := \left(\frac{x}{K} - 273.15\right)$ $FtoC(x) := \frac{5}{9}\left(\frac{x}{°F} - 32\right)$

ORIGIN ≡ 1

Model Parameters:

$\sigma := 5.67 \cdot 10^{-8} \frac{W}{m^2 \cdot K^4}$

$k_{stl} := 60.5 \frac{W}{m \cdot K}$

$D := 6in$ $r := 0.280in$

$\varepsilon_{stl} := 0.85$

$L_{Mv} := 18ft$ $\delta_{Mv} := 18in$

$\varepsilon_M := 0.7$ $A_M := \frac{(22ft) \cdot (5.5ft)}{\pi \cdot D \cdot \delta}$ $A_M = 51.354$ $T_M := (1050 + 273.15)K$ Melt Top Surface Temperature

Natural Convection Heat Transfer Coefficient Correlation Parameters

Natural convection heat transfer coefficients are modeled using correlations from Holman, Heat Transfer, 3rd Edition, p. 219. They are of the form ...

$h = \zeta_o (\Delta T)^{1/3}$

where the correlation parameter, ζ_o, reflects the shape and orientation of the surface (the subscript "o" indicates the orientation – e.g., V -> vertical, HU -> horizontal, heated surface facing up, and so on).

$\zeta_V := 1.32 \frac{W}{m^2 \sqrt[3]{K^4}}$ $\zeta_{HU} := 1.52 \frac{W}{m^2 \sqrt[3]{K^4}}$

Page 1

Calculation Sheet: QAP 3.1, Rev. 6 (11-15-05)

CALCULATION SHEET

Project No. 0509206.01	Calculation No. 0509206.01-M-004	Rev. No. 1	Page No. 136 of 159
Title: DBVS AWTE Thermal Load Inventory			
Prepared By: P.S. Lowery	Date: 2.14.06	Checked By: S.R. Pierce	Date: 2.15.06

DBVS AWTE Off-Gas Exhaust Line Thermal

Calculate the forced convective heat transfer coefficient for transfer to/from the exhaust air flow and the exhaust line walls ...:

At the air temperature of 875°F (470°C) the properties are ...

$\rho_A := 0.48\frac{kg}{m^3}$ $\nu_A := 70\cdot10^{-6}\frac{m^2}{s}$ $k_A := 0.053\frac{W}{m\cdot K}$ $C_p := 1080\frac{J}{kg\cdot K}$ $Pr := 0.7$

The process flow sheet provided in Appendix A (p. 25 of this calculation) indicates the inlet air volumetric flow rate is ...

$Q_A := 405\frac{ft^3}{min}$

The cross-sectional area of the inlet line is ... $A_{inlet} := \frac{\pi}{4}\cdot D^2$ $A_{inlet} = 0.018\ m^2$

Therefore, the bulk flow speed is ... $u_A := \frac{Q_A}{A_{inlet}}$ $u_A = 10.504\frac{m}{s}$

The corresponding air mass flow rate is ... $m_{dot} := \rho_A\cdot Q_A$ $m_{dot} = 0.092\frac{kg}{s}$

The Reynolds number is ... $Re := \frac{u_A\cdot D}{\nu_A}$ $Re = 2.287\times10^4$

At this Reynolds & Prandtl number, for turbulent, fully-developed tube flow, the Nusselt number is ...

$Nu := 57$ (Table 9-1 of Kays & Crawford Convective Heat and Mass Transfer, 1966, McGraw-Hill Book Company

The Nusselt number is defined as Nu = hD/k, so the convective heat transfer coefficient is ...

$h_{inlet} := Nu\cdot\frac{k_A}{D}$ $h_{inlet} = 19.823\frac{1}{m^2\cdot K}W$

$T_0 := (Fnc(875°F) + 273.15)K$ Temperature at the base of the portion of the chute "exposed" to the off-gas plenum region

$T_{wall} := (570 + 273.15)K$ Temperature used to represent the O/G wall temperatures for the purposes of radiant heat transfer from the electrode surface

$T_{OG} := (Fnc(875°F) + 273.15)K$ Temperature of the off-gas plenum gases

$T_A := T_{wall}$ Temperature of the air space between the O/G hood and the AWTE floor (set equal to max hood temperature for conservatism)

$T_{AWTE} := T_{wall}$ Temperature of the underside of the AWTE floor (set equal to max hood temperature for conservatism)

$T_{room} := (Fnc(77°F) + 273.15)K$ Temperature of the AWTE room and the associated internal equipment & structures

Page 2

AKES CORPORATION	**CALCULATION SHEET**		
Project No. 0509206.01	Calculation No. 0509206.01-M-004	Rev. No. 1	Page No. 137 of 159
Title: DBVS AWTE Thermal Load Inventory			
Prepared By: P.S. Lowery	Date: 2.14.06	Checked By: S.R. Pierce	Date: 2.15.06

DBVS AWTE Off-Gas Exhaust Line Thermal

Pipe & Insulation Dimensions ...

$R_0 := \frac{D}{2}$ $\delta_{ins} := 2in$

$R_1 := R_0 + \delta_{ins}$ $R_1 = 5in$

Insulation Properties ...

$k_{ins} := 0.09 \frac{W}{m \cdot K}$ $\varepsilon_{316} := 0.3$

Nodes 1 thru 12 represent the steel chute
Node 101 thru 112 represent the air column within the steel chute
Nodes 201 thru 212 represent the temperature on the outside of the insulation jacket

Load matrix of view factors, F ...

$F_{1M} := 0.151$ $F_{2M} := 0.011$ $F_{3M} := 0.002$ $F_{4M} := 0.001$ $F_{5M} := 0.0004$ View factors from the cylindrical segments to the melt surface

$$F_{ss} := \begin{pmatrix} 0.697 & 0.140 & 0.009 & 0.002 & 0 & 0 & 0 & 0 & 0 & 0 & 0 & 0 \\ 0.140 & 0.697 & 0.140 & 0.009 & 0.002 & 0 & 0 & 0 & 0 & 0 & 0 & 0 \\ 0.009 & 0.140 & 0.697 & 0.140 & 0.009 & 0.002 & 0 & 0 & 0 & 0 & 0 & 0 \\ 0.002 & 0.009 & 0.140 & 0.697 & 0.140 & 0.009 & 0.002 & 0 & 0 & 0 & 0 & 0 \\ 0 & 0.002 & 0.009 & 0.140 & 0.697 & 0.140 & 0.009 & 0.002 & 0 & 0 & 0 & 0 \\ 0 & 0 & 0.002 & 0.009 & 0.140 & 0.697 & 0.140 & 0.009 & 0.002 & 0 & 0 & 0 \\ 0 & 0 & 0 & 0.002 & 0.009 & 0.140 & 0.697 & 0.140 & 0.009 & 0.002 & 0 & 0 \\ 0 & 0 & 0 & 0 & 0.002 & 0.009 & 0.140 & 0.697 & 0.140 & 0.009 & 0.002 & 0 \\ 0 & 0 & 0 & 0 & 0 & 0.002 & 0.009 & 0.140 & 0.697 & 0.140 & 0.009 & 0.002 \\ 0 & 0 & 0 & 0 & 0 & 0 & 0.002 & 0.009 & 0.140 & 0.697 & 0.140 & 0.009 \\ 0 & 0 & 0 & 0 & 0 & 0 & 0 & 0.002 & 0.009 & 0.140 & 0.697 & 0.140 \\ 0 & 0 & 0 & 0 & 0 & 0 & 0 & 0 & 0.002 & 0.009 & 0.140 & 0.697 \end{pmatrix}$$

View factors from a cylindrical segment to its neighboring cylindrical segments. For example, $F_{1,3}$ is the view factor from segment 1 in the model to segment 3. $F_{1,3}=F_{3,1}=0.009$

Page 3

Calculation Sheet. QAP 3.1. Rev. 6 (11-15-05)

CALCULATION SHEET

Project No. 0509206.01	Calculation No. 0509206.01-M-004	Rev. No. 1	Page No. 138 of 159
Title: DBVS AWTE Thermal Load Inventory			
Prepared By: P.S. Lowery	Date: 2.14.06	Checked By: S.R. Pierce	Date: 2.15.06

DBVS AWTE Oil-Gas Exhaust Line Thermal

F =

	1	2	3	4	5	6	7	8	9	10	11	12
1	0.697	0.14	0.009	0.002	0	0	0	0	0	0	0	0
2	0.14	0.697	0.14	0.009	0.002	0	0	0	0	0	0	0
3	0.009	0.14	0.697	0.14	0.009	0.002	0	0	0	0	0	0
4	0.002	0.009	0.14	0.697	0.14	0.009	0.002	0	0	0	0	0
5	0	0.002	0.009	0.14	0.697	0.14	0.009	0.002	0	0	0	0
6	0	0	0.002	0.009	0.14	0.697	0.14	0.009	0.002	0	0	0
7	0	0	0	0.002	0.009	0.14	0.697	0.14	0.009	0.002	0	0
8	0	0	0	0	0.002	0.009	0.14	0.697	0.14	0.009	0.002	0
9	0	0	0	0	0	0.002	0.009	0.14	0.697	0.14	0.009	0.002
10	0	0	0	0	0	0	0.002	0.009	0.14	0.697	0.14	0.009
11	0	0	0	0	0	0	0	0.002	0.009	0.14	0.697	0.14
12	0	0	0	0	0	0	0	0	0.002	0.009	0.14	0.697

Initial guess for temperature distribution ...

$T_1 := (600 + 273.15)K$ $T_{101} := (50 + 273.15)K$ $T_{201} := (50 + 273.15)K$

$T_2 := (600 + 273.15)K$ $T_{102} := (50 + 273.15)K$ $T_{202} := (50 + 273.15)K$

$T_3 := (600 + 273.15)K$ $T_{103} := (50 + 273.15)K$ $T_{203} := (50 + 273.15)K$

$T_4 := (600 + 273.15)K$ $T_{104} := (50 + 273.15)K$ $T_{204} := (50 + 273.15)K$

$T_5 := (600 + 273.15)K$ $T_{105} := (50 + 273.15)K$ $T_{205} := (50 + 273.15)K$

$T_6 := (600 + 273.15)K$ $T_{106} := (50 + 273.15)K$ $T_{206} := (50 + 273.15)K$

$T_7 := (600 + 273.15)K$ $T_{107} := (50 + 273.15)K$ $T_{207} := (50 + 273.15)K$

$T_8 := (600 + 273.15)K$ $T_{108} := (50 + 273.15)K$ $T_{208} := (50 + 273.15)K$

$T_9 := (600 + 273.15)K$ $T_{109} := (50 + 273.15)K$ $T_{209} := (50 + 273.15)K$

$T_{10} := (600 + 273.15)K$ $T_{110} := (50 + 273.15)K$ $T_{210} := (50 + 273.15)K$

$T_{11} := (600 + 273.15)K$ $T_{111} := (50 + 273.15)K$ $T_{211} := (50 + 273.15)K$

$T_{12} := (600 + 273.15)K$ $T_{112} := (50 + 273.15)K$ $T_{212} := (50 + 273.15)K$

Set-up a vector of heat sink values for direct cooling of each of the 12 segments used to model the chute. This energy will be removed directly from its associated chute segment in the model. For example, An entry of x in vector element $q_{cool}[5]$ will remove x Watts of from that segment.

Page 4

CALCULATION SHEET			
Project No. 0509206.01	Calculation No. 0509206.01-M-004	Rev. No. 1	Page No. 139 of 159
Title: DBVS AWTE Thermal Load Inventory			
Prepared By: P.S. Lowery	Date: 2.14.06	Checked By: S.R. Pierce	Date: 2.15.06

DBVS AWTE Off-Gas Exhaust Line Thermal

$$q_{cool} := \begin{pmatrix} 0W \\ 0W \\ 0W \\ 0W \\ 0W \\ 0W \\ 0W \\ 0W \\ 0W \\ 0W \\ 0W \\ 0W \end{pmatrix}$$

This feature is not used in the model

Given

First define the energy balance equations for the steel chute elements ...

$$\frac{T_2 - 2\cdot T_1 + T_0}{\delta^2} - \frac{2k_{ins}}{k_{stl}\cdot D\cdot t\cdot \ln\left(\frac{R_1}{R_0}\right)}\cdot\left(T_1 - T_{201}\right) - \frac{h_{under}}{k_{stl}\cdot t}\cdot\left(T_1 - T_{101}\right) ... = 0$$

$$+ 0 - \frac{\sigma}{k_{stl}\cdot t}\cdot\frac{T_1^4 - T_M^4}{\left(\frac{1-\varepsilon_{stl}}{\varepsilon_{stl}}\right) + \frac{1}{F_{1M}} + \left(\frac{1-\varepsilon_M}{\varepsilon_M\cdot A_M}\right)} ...$$

$$+ 0 - \frac{\sigma}{k_{stl}\cdot t}\cdot\frac{T_1^4 - T_2^4}{\left(\frac{1-\varepsilon_{stl}}{\varepsilon_{stl}}\right) + \frac{1}{F_{1,2}} + \left(\frac{1-\varepsilon_{stl}}{\varepsilon_{stl}}\right)} - \frac{\sigma}{k_{stl}\cdot t}\cdot\frac{T_1^4 - T_3^4}{\left(\frac{1-\varepsilon_{stl}}{\varepsilon_{stl}}\right) + \frac{1}{F_{1,3}} + \left(\frac{1-\varepsilon_{stl}}{\varepsilon_{stl}}\right)} ...$$

$$+ 0 - \frac{\sigma}{k_{stl}\cdot t}\cdot\frac{T_1^4 - T_4^4}{\left(\frac{1-\varepsilon_{stl}}{\varepsilon_{stl}}\right) + \frac{1}{F_{1,4}} + \left(\frac{1-\varepsilon_{stl}}{\varepsilon_{stl}}\right)} - \frac{q_{cool_1}}{\pi\cdot k_{stl}\cdot D\cdot t\cdot\delta}$$

Page 5

Calculation Sheet: QAP 3.1, Rev. 6 (11-15-05)

ARES CORPORATION	CALCULATION SHEET		
Project No. 0509206.01	Calculation No. 0509206.01-M-004	Rev. No. 1	Page No. 140 of 159
Title: DBVS AWTE Thermal Load Inventory			
Prepared By: P.S. Lowery	Date: 2.14.06	Checked By: S.R. Pierce	Date: 2.15.06

DBVS AWTE Off-Gas Exhaust Line Thermal

$$\frac{T_3 - 2\cdot T_2 + T_1}{s^2} - \frac{2k_{ins}}{k_{stl}\cdot D\cdot 4\cdot \ln\left(\frac{R_1}{R_0}\right)}\cdot\left(T_2 - T_{202}\right) - \frac{h_{mdot}}{k_{stl}\cdot t}\cdot\left(T_2 - T_{102}\right) - \cdots = 0$$

$$+ 0 - \frac{\sigma}{k_{stl}\cdot t}\cdot\frac{T_2^4 - T_M^4}{\left(\frac{1-\varepsilon_{stl}}{\varepsilon_{stl}}\right) + \frac{1}{F_{2M}} + \left(\frac{1-\varepsilon_M}{\varepsilon_M\cdot A_M}\right)} - \cdots$$

$$+ 0 - \frac{\sigma}{k_{stl}\cdot t}\cdot\frac{T_2^4 - T_1^4}{\left(\frac{1-\varepsilon_{stl}}{\varepsilon_{stl}}\right) + \frac{1}{F_{2,1}} + \left(\frac{1-\varepsilon_{stl}}{\varepsilon_{stl}}\right)} - \frac{\sigma}{k_{stl}\cdot t}\cdot\frac{T_2^4 - T_3^4}{\left(\frac{1-\varepsilon_{stl}}{\varepsilon_{stl}}\right) + \frac{1}{F_{2,3}} + \left(\frac{1-\varepsilon_{stl}}{\varepsilon_{stl}}\right)} - \cdots$$

$$+ 0 - \frac{\sigma}{k_{stl}\cdot t}\cdot\frac{T_2^4 - T_4^4}{\left(\frac{1-\varepsilon_{stl}}{\varepsilon_{stl}}\right) + \frac{1}{F_{2,4}} + \left(\frac{1-\varepsilon_{stl}}{\varepsilon_{stl}}\right)} - \frac{\sigma}{k_{stl}\cdot t}\cdot\frac{T_2^4 - T_5^4}{\left(\frac{1-\varepsilon_{stl}}{\varepsilon_{stl}}\right) + \frac{1}{F_{2,5}} + \left(\frac{1-\varepsilon_{stl}}{\varepsilon_{stl}}\right)} - \frac{q_{cool_2}}{\pi\cdot k_{stl}\cdot D\cdot t\cdot 6}$$

$$\frac{T_4 - 2\cdot T_3 + T_2}{s^2} - \frac{2k_{ins}}{k_{stl}\cdot D\cdot t\cdot \ln\left(\frac{R_1}{R_0}\right)}\cdot\left(T_3 - T_{203}\right) - \frac{h_{mdot}}{k_{stl}\cdot t}\cdot\left(T_3 - T_{103}\right) - \cdots = 0$$

$$+ 0 - \frac{\sigma}{k_{stl}\cdot t}\cdot\frac{T_3^4 - T_M^4}{\left(\frac{1-\varepsilon_{stl}}{\varepsilon_{stl}}\right) + \frac{1}{F_{3M}} + \left(\frac{1-\varepsilon_M}{\varepsilon_M\cdot A_M}\right)} - \cdots$$

$$+ 0 - \frac{\sigma}{k_{stl}\cdot t}\cdot\frac{T_3^4 - T_1^4}{\left(\frac{1-\varepsilon_{stl}}{\varepsilon_{stl}}\right) + \frac{1}{F_{3,1}} + \left(\frac{1-\varepsilon_{stl}}{\varepsilon_{stl}}\right)} - \frac{\sigma}{k_{stl}\cdot t}\cdot\frac{T_3^4 - T_2^4}{\left(\frac{1-\varepsilon_{stl}}{\varepsilon_{stl}}\right) + \frac{1}{F_{3,2}} + \left(\frac{1-\varepsilon_{stl}}{\varepsilon_{stl}}\right)} - \cdots$$

$$+ 0 - \frac{\sigma}{k_{stl}\cdot t}\cdot\frac{T_3^4 - T_4^4}{\left(\frac{1-\varepsilon_{stl}}{\varepsilon_{stl}}\right) + \frac{1}{F_{3,4}} + \left(\frac{1-\varepsilon_{stl}}{\varepsilon_{stl}}\right)} - \frac{\sigma}{k_{stl}\cdot t}\cdot\frac{T_3^4 - T_5^4}{\left(\frac{1-\varepsilon_{stl}}{\varepsilon_{stl}}\right) + \frac{1}{F_{3,5}} + \left(\frac{1-\varepsilon_{stl}}{\varepsilon_{stl}}\right)} - \cdots$$

$$+ 0 - \frac{\sigma}{k_{stl}\cdot t}\cdot\frac{T_3^4 - T_6^4}{\left(\frac{1-\varepsilon_{stl}}{\varepsilon_{stl}}\right) + \frac{1}{F_{3,6}} + \left(\frac{1-\varepsilon_{stl}}{\varepsilon_{stl}}\right)} - \frac{q_{cool_3}}{\pi\cdot k_{stl}\cdot D\cdot t\cdot 6}$$

Page 6

ARES CORPORATION	CALCULATION SHEET		
Project No. 0509206.01	Calculation No. 0509206.01-M-004	Rev. No. 1	Page No. 141 of 159
Title: DBVS AWTE Thermal Load Inventory			
Prepared By: P.S. Lowery	Date: 2.14.06	Checked By: S.R. Pierce	Date: 2.15.06

DBVS AWTE Off-Gas Exhaust Line Thermal

$$\frac{T_5 - 2\cdot T_4 + T_3}{s^2} - \frac{2k_{ins}}{k_{stl}\cdot D\cdot t\cdot \ln\left(\frac{R_1}{R_0}\right)}\cdot\left(T_4 - T_{204}\right) - \frac{h_{mdot}}{k_{stl}\cdot t}\cdot\left(T_4 - T_{104}\right) - \ldots = 0$$

$$+0 - \frac{\sigma}{k_{stl}\cdot t}\cdot\frac{T_4^4 - T_M^4}{\left(\frac{1-\varepsilon_{stl}}{\varepsilon_{stl}}\right) + \frac{1}{F_{4M}} + \left(\frac{1-\varepsilon_M}{\varepsilon_M\cdot A_M}\right)} \ldots$$

$$+0 - \frac{\sigma}{k_{stl}\cdot t}\cdot\frac{T_4^4 - T_1^4}{\left(\frac{1-\varepsilon_{stl}}{\varepsilon_{stl}}\right) + \frac{1}{F_{4,1}} + \left(\frac{1-\varepsilon_{stl}}{\varepsilon_{stl}}\right)} - \frac{\sigma}{k_{stl}\cdot t}\cdot\frac{T_4^4 - T_2^4}{\left(\frac{1-\varepsilon_{stl}}{\varepsilon_{stl}}\right) + \frac{1}{F_{4,2}} + \left(\frac{1-\varepsilon_{stl}}{\varepsilon_{stl}}\right)} \ldots$$

$$+0 - \frac{\sigma}{k_{stl}\cdot t}\cdot\frac{T_4^4 - T_3^4}{\left(\frac{1-\varepsilon_{stl}}{\varepsilon_{stl}}\right) + \frac{1}{F_{4,3}} + \left(\frac{1-\varepsilon_{stl}}{\varepsilon_{stl}}\right)} - \frac{\sigma}{k_{stl}\cdot t}\cdot\frac{T_4^4 - T_5^4}{\left(\frac{1-\varepsilon_{stl}}{\varepsilon_{stl}}\right) + \frac{1}{F_{4,5}} + \left(\frac{1-\varepsilon_{stl}}{\varepsilon_{stl}}\right)} \ldots$$

$$+0 - \frac{\sigma}{k_{stl}\cdot t}\cdot\frac{T_4^4 - T_6^4}{\left(\frac{1-\varepsilon_{stl}}{\varepsilon_{stl}}\right) + \frac{1}{F_{4,6}} + \left(\frac{1-\varepsilon_{stl}}{\varepsilon_{stl}}\right)} - \frac{\sigma}{k_{stl}\cdot t}\cdot\frac{T_4^4 - T_7^4}{\left(\frac{1-\varepsilon_{stl}}{\varepsilon_{stl}}\right) + \frac{1}{F_{4,7}} + \left(\frac{1-\varepsilon_{stl}}{\varepsilon_{stl}}\right)} - \frac{q_{cool_4}}{\pi\cdot k_{stl}\cdot D\cdot t\cdot \delta}$$

$$\frac{T_6 - 2\cdot T_5 + T_4}{s^2} - \frac{2k_{ins}}{k_{stl}\cdot D\cdot t\cdot \ln\left(\frac{R_1}{R_0}\right)}\cdot\left(T_5 - T_{205}\right) - \frac{h_{mdot}}{k_{stl}\cdot t}\cdot\left(T_5 - T_{105}\right) \ldots = 0$$

$$+0 - \frac{\sigma}{k_{stl}\cdot t}\cdot\frac{T_5^4 - T_M^4}{\left(\frac{1-\varepsilon_{stl}}{\varepsilon_{stl}}\right) + \frac{1}{F_{5M}} + \left(\frac{1-\varepsilon_M}{\varepsilon_M\cdot A_M}\right)} \ldots$$

$$+0 - \frac{\sigma}{k_{stl}\cdot t}\cdot\frac{T_5^4 - T_2^4}{\left(\frac{1-\varepsilon_{stl}}{\varepsilon_{stl}}\right) + \frac{1}{F_{5,2}} + \left(\frac{1-\varepsilon_{stl}}{\varepsilon_{stl}}\right)} \ldots$$

$$+0 - \frac{\sigma}{k_{stl}\cdot t}\cdot\frac{T_5^4 - T_3^4}{\left(\frac{1-\varepsilon_{stl}}{\varepsilon_{stl}}\right) + \frac{1}{F_{5,3}} + \left(\frac{1-\varepsilon_{stl}}{\varepsilon_{stl}}\right)} - \frac{\sigma}{k_{stl}\cdot t}\cdot\frac{T_5^4 - T_4^4}{\left(\frac{1-\varepsilon_{stl}}{\varepsilon_{stl}}\right) + \frac{1}{F_{5,4}} + \left(\frac{1-\varepsilon_{stl}}{\varepsilon_{stl}}\right)} \ldots$$

$$+0 - \frac{\sigma}{k_{stl}\cdot t}\cdot\frac{T_5^4 - T_6^4}{\left(\frac{1-\varepsilon_{stl}}{\varepsilon_{stl}}\right) + \frac{1}{F_{5,6}} + \left(\frac{1-\varepsilon_{stl}}{\varepsilon_{stl}}\right)} - \frac{\sigma}{k_{stl}\cdot t}\cdot\frac{T_5^4 - T_7^4}{\left(\frac{1-\varepsilon_{stl}}{\varepsilon_{stl}}\right) + \frac{1}{F_{5,7}} + \left(\frac{1-\varepsilon_{stl}}{\varepsilon_{stl}}\right)} \ldots$$

$$+0 - \frac{\sigma}{k_{stl}\cdot t}\cdot\frac{T_5^4 - T_8^4}{\left(\frac{1-\varepsilon_{stl}}{\varepsilon_{stl}}\right) + \frac{1}{F_{5,8}} + \left(\frac{1-\varepsilon_{stl}}{\varepsilon_{stl}}\right)} - \frac{q_{cool_5}}{\pi\cdot k_{stl}\cdot D\cdot t\cdot \delta}$$

Page 7

Calculation Sheet: QAP 3.1, Rev. 6 (11-15-05)

ARES CORPORATION	CALCULATION SHEET		
Project No. 0509206.01	Calculation No. 0509206.01-M-004	Rev. No. 1	Page No. 142 of 159
Title: DBVS AWTE Thermal Load Inventory			
Prepared By: P.S. Lowery	Date: 2.14.06	Checked By: S.R. Pierce	Date: 2.15.06

DBVS AWTE Oil-Gas Exhaust Line Thermal

$$\frac{T_7 - 2\cdot T_6 + T_5}{\delta^2} - \frac{2k_{ins}}{k_{stl}\cdot D\cdot t\cdot \ln\left(\frac{R_1}{R_0}\right)}\cdot\left(T_6 - T_{206}\right) - \frac{h_{mdot}}{k_{stl}\cdot t}\cdot\left(T_6 - T_{106}\right) - \qquad = 0$$

$$+0 - \frac{\sigma}{k_{stl}\cdot t}\cdot\frac{T_6^4 - T_3^4}{\left(\frac{1-\varepsilon_{stl}}{\varepsilon_{stl}}\right) + \frac{1}{F_{6,3}} + \left(\frac{1-\varepsilon_{stl}}{\varepsilon_{stl}}\right)} -$$

$$+0 - \frac{\sigma}{k_{stl}\cdot t}\cdot\frac{T_6^4 - T_4^4}{\left(\frac{1-\varepsilon_{stl}}{\varepsilon_{stl}}\right) + \frac{1}{F_{6,4}} + \left(\frac{1-\varepsilon_{stl}}{\varepsilon_{stl}}\right)} - \frac{\sigma}{k_{stl}\cdot t}\cdot\frac{T_6^4 - T_5^4}{\left(\frac{1-\varepsilon_{stl}}{\varepsilon_{stl}}\right) + \frac{1}{F_{6,5}} + \left(\frac{1-\varepsilon_{stl}}{\varepsilon_{stl}}\right)} -$$

$$+0 - \frac{\sigma}{k_{stl}\cdot t}\cdot\frac{T_6^4 - T_7^4}{\left(\frac{1-\varepsilon_{stl}}{\varepsilon_{stl}}\right) + \frac{1}{F_{6,7}} + \left(\frac{1-\varepsilon_{stl}}{\varepsilon_{stl}}\right)} - \frac{\sigma}{k_{stl}\cdot t}\cdot\frac{T_6^4 - T_8^4}{\left(\frac{1-\varepsilon_{stl}}{\varepsilon_{stl}}\right) + \frac{1}{F_{6,8}} + \left(\frac{1-\varepsilon_{stl}}{\varepsilon_{stl}}\right)} -$$

$$+0 - \frac{\sigma}{k_{stl}\cdot t}\cdot\frac{T_6^4 - T_9^4}{\left(\frac{1-\varepsilon_{stl}}{\varepsilon_{stl}}\right) + \frac{1}{F_{6,9}} + \left(\frac{1-\varepsilon_{stl}}{\varepsilon_{stl}}\right)} - \frac{q_{cool_6}}{\pi k_{stl}\cdot D\cdot t\cdot\delta}$$

$$\frac{T_8 - 2\cdot T_7 + T_6}{\delta^2} - \frac{2k_{ins}}{k_{stl}\cdot D\cdot t\cdot \ln\left(\frac{R_1}{R_0}\right)}\cdot\left(T_7 - T_{207}\right) - \frac{h_{mdot}}{k_{stl}\cdot t}\cdot\left(T_7 - T_{107}\right) \ldots \qquad = 0$$

$$+0 - \frac{\sigma}{k_{stl}\cdot t}\cdot\frac{T_7^4 - T_4^4}{\left(\frac{1-\varepsilon_{stl}}{\varepsilon_{stl}}\right) + \frac{1}{F_{7,4}} + \left(\frac{1-\varepsilon_{stl}}{\varepsilon_{stl}}\right)} -$$

$$+0 - \frac{\sigma}{k_{stl}\cdot t}\cdot\frac{T_7^4 - T_5^4}{\left(\frac{1-\varepsilon_{stl}}{\varepsilon_{stl}}\right) + \frac{1}{F_{7,5}} + \left(\frac{1-\varepsilon_{stl}}{\varepsilon_{stl}}\right)} - \frac{\sigma}{k_{stl}\cdot t}\cdot\frac{T_7^4 - T_6^4}{\left(\frac{1-\varepsilon_{stl}}{\varepsilon_{stl}}\right) + \frac{1}{F_{7,6}} + \left(\frac{1-\varepsilon_{stl}}{\varepsilon_{stl}}\right)} -$$

$$+0 - \frac{\sigma}{k_{stl}\cdot t}\cdot\frac{T_7^4 - T_8^4}{\left(\frac{1-\varepsilon_{stl}}{\varepsilon_{stl}}\right) + \frac{1}{F_{7,8}} + \left(\frac{1-\varepsilon_{stl}}{\varepsilon_{stl}}\right)} - \frac{\sigma}{k_{stl}\cdot t}\cdot\frac{T_7^4 - T_9^4}{\left(\frac{1-\varepsilon_{stl}}{\varepsilon_{stl}}\right) + \frac{1}{F_{7,9}} + \left(\frac{1-\varepsilon_{stl}}{\varepsilon_{stl}}\right)} -$$

$$+0 - \frac{\sigma}{k_{stl}\cdot t}\cdot\frac{T_7^4 - T_{10}^4}{\left(\frac{1-\varepsilon_{stl}}{\varepsilon_{stl}}\right) + \frac{1}{F_{7,10}} + \left(\frac{1-\varepsilon_{stl}}{\varepsilon_{stl}}\right)} - \frac{q_{cool_7}}{\pi k_{stl}\cdot D\cdot t\cdot\delta}$$

Page 8

ARES CORPORATION	CALCULATION SHEET		
Project No. 0509206.01	Calculation No. 0509206.01-M-004	Rev. No. 1	Page No. 143 of 159
Title: DBVS AWTE Thermal Load Inventory			
Prepared By: P.S. Lowery	Date: 2.14.06	Checked By: S.R. Pierce	Date: 2.15.06

DBVS AWTE Off-Gas Exhaust Line Thermal

$$\frac{T_9 - 2\cdot T_8 + T_7}{\delta^2} - \frac{2k_{ins}}{k_{stl}\cdot D\cdot t\cdot \ln\left(\frac{R_1}{R_0}\right)}\cdot\left(T_8 - T_{208}\right) - \frac{h_{radot}}{k_{stl}\cdot t}\cdot\left(T_8 - T_{108}\right) - \qquad = 0$$

$$+0 - \frac{\sigma}{k_{stl}\cdot t}\cdot\frac{T_8^4 - T_5^4}{\left(\frac{1-\varepsilon_{stl}}{\varepsilon_{stl}}\right) + \frac{1}{F_{8,5}} + \left(\frac{1-\varepsilon_{stl}}{\varepsilon_{stl}}\right)} -$$

$$+0 - \frac{\sigma}{k_{stl}\cdot t}\cdot\frac{T_8^4 - T_6^4}{\left(\frac{1-\varepsilon_{stl}}{\varepsilon_{stl}}\right) + \frac{1}{F_{8,6}} + \left(\frac{1-\varepsilon_{stl}}{\varepsilon_{stl}}\right)} - \frac{\sigma}{k_{stl}\cdot t}\cdot\frac{T_8^4 - T_7^4}{\left(\frac{1-\varepsilon_{stl}}{\varepsilon_{stl}}\right) + \frac{1}{F_{8,7}} + \left(\frac{1-\varepsilon_{stl}}{\varepsilon_{stl}}\right)} -$$

$$+0 - \frac{\sigma}{k_{stl}\cdot t}\cdot\frac{T_8^4 - T_9^4}{\left(\frac{1-\varepsilon_{stl}}{\varepsilon_{stl}}\right) + \frac{1}{F_{8,9}} + \left(\frac{1-\varepsilon_{stl}}{\varepsilon_{stl}}\right)} - \frac{\sigma}{k_{stl}\cdot t}\cdot\frac{T_8^4 - T_{10}^4}{\left(\frac{1-\varepsilon_{stl}}{\varepsilon_{stl}}\right) + \frac{1}{F_{8,10}} + \left(\frac{1-\varepsilon_{stl}}{\varepsilon_{stl}}\right)} -$$

$$+0 - \frac{\sigma}{k_{stl}\cdot t}\cdot\frac{T_8^4 - T_{11}^4}{\left(\frac{1-\varepsilon_{stl}}{\varepsilon_{stl}}\right) + \frac{1}{F_{8,11}} + \left(\frac{1-\varepsilon_{stl}}{\varepsilon_{stl}}\right)} - \frac{q_{cool_8}}{\pi k_{stl}\cdot D\cdot t\cdot\delta}$$

$$\frac{T_{10} - 2\cdot T_9 + T_8}{\delta^2} - \qquad = 0$$

$$+0 - \frac{2k_{ins}}{k_{stl}\cdot D\cdot t\cdot \ln\left(\frac{R_1}{R_0}\right)}\cdot\left(T_9 - T_{209}\right) - \frac{h_{radot}}{k_{stl}\cdot t}\cdot\left(T_9 - T_{109}\right) -$$

$$+0 - \frac{\sigma}{k_{stl}\cdot t}\cdot\frac{T_9^4 - T_6^4}{\left(\frac{1-\varepsilon_{stl}}{\varepsilon_{stl}}\right) + \frac{1}{F_{9,6}} + \left(\frac{1-\varepsilon_{stl}}{\varepsilon_{stl}}\right)} -$$

$$+0 - \frac{\sigma}{k_{stl}\cdot t}\cdot\frac{T_9^4 - T_7^4}{\left(\frac{1-\varepsilon_{stl}}{\varepsilon_{stl}}\right) + \frac{1}{F_{9,7}} + \left(\frac{1-\varepsilon_{stl}}{\varepsilon_{stl}}\right)} - \frac{\sigma}{k_{stl}\cdot t}\cdot\frac{T_9^4 - T_8^4}{\left(\frac{1-\varepsilon_{stl}}{\varepsilon_{stl}}\right) + \frac{1}{F_{9,8}} + \left(\frac{1-\varepsilon_{stl}}{\varepsilon_{stl}}\right)} -$$

$$+0 - \frac{\sigma}{k_{stl}\cdot t}\cdot\frac{T_9^4 - T_{10}^4}{\left(\frac{1-\varepsilon_{stl}}{\varepsilon_{stl}}\right) + \frac{1}{F_{9,10}} + \left(\frac{1-\varepsilon_{stl}}{\varepsilon_{stl}}\right)} - \frac{\sigma}{k_{stl}\cdot t}\cdot\frac{T_9^4 - T_{11}^4}{\left(\frac{1-\varepsilon_{stl}}{\varepsilon_{stl}}\right) + \frac{1}{F_{9,11}} + \left(\frac{1-\varepsilon_{stl}}{\varepsilon_{stl}}\right)} -$$

$$+0 - \frac{\sigma}{k_{stl}\cdot t}\cdot\frac{T_9^4 - T_{12}^4}{\left(\frac{1-\varepsilon_{stl}}{\varepsilon_{stl}}\right) + \frac{1}{F_{9,12}} + \left(\frac{1-\varepsilon_{stl}}{\varepsilon_{stl}}\right)} - \frac{q_{cool_9}}{\pi k_{stl}\cdot D\cdot t\cdot\delta}$$

Page 9

Calculation Sheet. QAP 5.1, Rev. 6 (11-15-05)

ARES CORPORATION	CALCULATION SHEET		
Project No. 0509206.01	Calculation No. 0509206.01-M-004	Rev. No. 1	Page No. 144 of 159
Title: DBVS AWTE Thermal Load Inventory			
Prepared By: P.S. Lowery	Date: 2.14.06	Checked By: S.R. Pierce	Date: 2.15.06

DBVS AWTE Off-Gas Exhaust Line Thermal

$$\frac{T_{11} - 3\cdot T_{10} + T_9}{s^2} \ldots = 0$$

$$+0 - \frac{2k_{ins}}{k_{stl}\cdot D\cdot t\cdot \ln\left(\frac{R_1}{R_0}\right)}\cdot\left(T_{10} - T_{210}\right) - \frac{h_{mdot}}{k_{stl}\cdot t}\cdot\left(T_{10} - T_{110}\right) \ldots$$

$$+0 - \frac{\sigma}{k_{stl}\cdot t}\cdot\frac{T_{10}^4 - T_7^4}{\left(\frac{1-\varepsilon_{stl}}{\varepsilon_{stl}}\right) + \frac{1}{F_{10,7}} + \left(\frac{1-\varepsilon_{stl}}{\varepsilon_{stl}}\right)} \ldots$$

$$+0 - \frac{\sigma}{k_{stl}\cdot t}\cdot\frac{T_{10}^4 - T_8^4}{\left(\frac{1-\varepsilon_{stl}}{\varepsilon_{stl}}\right) + \frac{1}{F_{10,8}} + \left(\frac{1-\varepsilon_{stl}}{\varepsilon_{stl}}\right)} - \frac{\sigma}{k_{stl}\cdot t}\cdot\frac{T_{10}^4 - T_9^4}{\left(\frac{1-\varepsilon_{stl}}{\varepsilon_{stl}}\right) + \frac{1}{F_{10,9}} + \left(\frac{1-\varepsilon_{stl}}{\varepsilon_{stl}}\right)} \ldots$$

$$+0 - \frac{\sigma}{k_{stl}\cdot t}\cdot\frac{T_{10}^4 - T_{11}^4}{\left(\frac{1-\varepsilon_{stl}}{\varepsilon_{stl}}\right) + \frac{1}{F_{10,11}} + \left(\frac{1-\varepsilon_{stl}}{\varepsilon_{stl}}\right)} - \frac{\sigma}{k_{stl}\cdot t}\cdot\frac{T_{10}^4 - T_{12}^4}{\left(\frac{1-\varepsilon_{stl}}{\varepsilon_{stl}}\right) + \frac{1}{F_{10,12}} + \left(\frac{1-\varepsilon_{stl}}{\varepsilon_{stl}}\right)} - \frac{q_{cool_{10}}}{\pi k_{stl}\cdot D\cdot t\cdot \delta}$$

$$\frac{T_{12} - 3\cdot T_{11} + T_{10}}{s^2} \ldots = 0$$

$$+0 - \frac{2k_{ins}}{k_{stl}\cdot D\cdot t\cdot \ln\left(\frac{R_1}{R_0}\right)}\cdot\left(T_{11} - T_{211}\right) - \frac{h_{mdot}}{k_{stl}\cdot t}\cdot\left(T_{11} - T_{111}\right) \ldots$$

$$+0 - \frac{\sigma}{k_{stl}\cdot t}\cdot\frac{T_{11}^4 - T_8^4}{\left(\frac{1-\varepsilon_{stl}}{\varepsilon_{stl}}\right) + \frac{1}{F_{11,8}} + \left(\frac{1-\varepsilon_{stl}}{\varepsilon_{stl}}\right)} \ldots$$

$$+0 - \frac{\sigma}{k_{stl}\cdot t}\cdot\frac{T_{11}^4 - T_9^4}{\left(\frac{1-\varepsilon_{stl}}{\varepsilon_{stl}}\right) + \frac{1}{F_{11,9}} + \left(\frac{1-\varepsilon_{stl}}{\varepsilon_{stl}}\right)} - \frac{\sigma}{k_{stl}\cdot t}\cdot\frac{T_{11}^4 - T_{10}^4}{\left(\frac{1-\varepsilon_{stl}}{\varepsilon_{stl}}\right) + \frac{1}{F_{11,10}} + \left(\frac{1-\varepsilon_{stl}}{\varepsilon_{stl}}\right)} \ldots$$

$$+0 - \frac{\sigma}{k_{stl}\cdot t}\cdot\frac{T_{11}^4 - T_{12}^4}{\left(\frac{1-\varepsilon_{stl}}{\varepsilon_{stl}}\right) + \frac{1}{F_{11,12}} + \left(\frac{1-\varepsilon_{stl}}{\varepsilon_{stl}}\right)} - \frac{q_{cool_{11}}}{\pi k_{stl}\cdot D\cdot t\cdot \delta}$$

ARES CORPORATION	CALCULATION SHEET		
Project No. 0509206.01	Calculation No. 0509206.01-M-004	Rev. No. 1	Page No. 145 of 159
Title: DBVS AWTE Thermal Load Inventory			
Prepared By: P.S. Lowery	Date: 2.14.06	Checked By: S.R. Pierce	Date: 2.15.06

DBVS AWTE OR-Gas Exhaust Line Thermal

$$\frac{T_{12} - T_{11}}{\delta^2} - \qquad = 0$$

$$+ 0 - \frac{2k_{ins}}{k_{stl} \cdot D \cdot \ln\left(\frac{R_1}{R_0}\right)} \cdot \left(T_{12} - T_{212}\right) - \frac{h_{mdot}}{k_{stl} \cdot t} \cdot \left(T_{12} - T_{112}\right) -$$

$$+ 0 - \frac{\sigma}{k_{stl} \cdot t} \cdot \frac{T_{12}^4 - T_9^4}{\left(\frac{1 - \varepsilon_{stl}}{\varepsilon_{stl}}\right) + \frac{1}{F_{12,9}} + \left(\frac{1 - \varepsilon_{stl}}{\varepsilon_{stl}}\right)} -$$

$$+ 0 - \frac{\sigma}{k_{stl} \cdot t} \cdot \frac{T_{12}^4 - T_{10}^4}{\left(\frac{1 - \varepsilon_{stl}}{\varepsilon_{stl}}\right) + \frac{1}{F_{12,10}} + \left(\frac{1 - \varepsilon_{stl}}{\varepsilon_{stl}}\right)} - \frac{\sigma}{k_{stl} \cdot t} \cdot \frac{T_{12}^4 - T_{11}^4}{\left(\frac{1 - \varepsilon_{stl}}{\varepsilon_{stl}}\right) + \frac{1}{F_{12,11}} + \left(\frac{1 - \varepsilon_{stl}}{\varepsilon_{stl}}\right)} - \frac{q_{cool_{12}}}{\pi k_{stl} \cdot D \cdot t \cdot \delta}$$

Now define the energy equations for the air column elements ...

$$\frac{T_{102} - 2 \cdot T_{101} + T_0}{\delta^2} - \frac{4 \cdot h_{mdot}}{k_A \cdot D} \cdot \left(T_{101} - T_1\right) - \frac{4m_{dot} \cdot Cp}{\pi \cdot k_A \cdot D^2 \cdot \delta} \cdot \left(T_{101} - T_{OG}\right) = 0$$

$$\frac{T_{103} - 2 \cdot T_{102} + T_{101}}{\delta^2} - \frac{4 \cdot h_{mdot}}{k_A \cdot D} \cdot \left(T_{102} - T_2\right) - \frac{4m_{dot} \cdot Cp}{\pi \cdot k_A \cdot D^2 \cdot \delta} \cdot \left(T_{102} - T_{101}\right) = 0$$

$$\frac{T_{104} - 2 \cdot T_{103} + T_{102}}{\delta^2} - \frac{4 \cdot h_{mdot}}{k_A \cdot D} \cdot \left(T_{103} - T_3\right) - \frac{4m_{dot} \cdot Cp}{\pi \cdot k_A \cdot D^2 \cdot \delta} \cdot \left(T_{103} - T_{102}\right) = 0$$

$$\frac{T_{105} - 2 \cdot T_{104} + T_{103}}{\delta^2} - \frac{4 \cdot h_{mdot}}{k_A \cdot D} \cdot \left(T_{104} - T_4\right) - \frac{4m_{dot} \cdot Cp}{\pi \cdot k_A \cdot D^2 \cdot \delta} \cdot \left(T_{104} - T_{103}\right) = 0$$

$$\frac{T_{106} - 2 \cdot T_{105} + T_{104}}{\delta^2} - \frac{4 \cdot h_{mdot}}{k_A \cdot D} \cdot \left(T_{105} - T_5\right) - \frac{4m_{dot} \cdot Cp}{\pi \cdot k_A \cdot D^2 \cdot \delta} \cdot \left(T_{105} - T_{104}\right) = 0$$

Page 11

A&E S CORPORATION	CALCULATION SHEET		
Project No. 0509206.01	Calculation No. 0509206.01-M-004	Rev. No. 1	Page No. 146 of 159
Title: DBVS AWTE Thermal Load Inventory			
Prepared By: P.S. Lowery	Date: 2.14.06	Checked By: S.R. Pierce	Date: 2.15.06

DBVS AWTE Off-Gas Exhaust Line Thermal

$$\frac{T_{107} - 2 \cdot T_{106} + T_{105}}{s^2} - \frac{4 \cdot h_{mdot}}{k_A \cdot D} \cdot (T_{106} - T_6) - \frac{4m_{dot} \cdot C_P}{\pi \cdot k_A \cdot D^2 \cdot s} \cdot (T_{106} - T_{105}) = 0$$

$$\frac{T_{108} - 2 \cdot T_{107} + T_{106}}{s^2} - \frac{4 \cdot h_{mdot}}{k_A \cdot D} \cdot (T_{107} - T_7) - \frac{4m_{dot} \cdot C_P}{\pi \cdot k_A \cdot D^2 \cdot s} \cdot (T_{107} - T_{106}) = 0$$

$$\frac{T_{109} - 2 \cdot T_{108} + T_{107}}{s^2} - \frac{4 \cdot h_{mdot}}{k_A \cdot D} \cdot (T_{108} - T_8) - \frac{4m_{dot} \cdot C_P}{\pi \cdot k_A \cdot D^2 \cdot s} \cdot (T_{108} - T_{107}) = 0$$

$$\frac{T_{110} - 2 \cdot T_{109} + T_{108}}{s^2} - \frac{4 \cdot h_{mdot}}{k_A \cdot D} \cdot (T_{109} - T_9) - \frac{4m_{dot} \cdot C_P}{\pi \cdot k_A \cdot D^2 \cdot s} \cdot (T_{109} - T_{108}) = 0$$

$$\frac{T_{111} - 2 \cdot T_{110} + T_{109}}{s^2} - \frac{4 \cdot h_{mdot}}{k_A \cdot D} \cdot (T_{110} - T_{10}) - \frac{4m_{dot} \cdot C_P}{\pi \cdot k_A \cdot D^2 \cdot s} \cdot (T_{110} - T_{109}) = 0$$

$$\frac{T_{112} - 2 \cdot T_{111} + T_{110}}{s^2} - \frac{4 \cdot h_{mdot}}{k_A \cdot D} \cdot (T_{111} - T_{11}) - \frac{4m_{dot} \cdot C_P}{\pi \cdot k_A \cdot D^2 \cdot s} \cdot (T_{111} - T_{110}) = 0$$

$$\frac{T_{112} - T_{111}}{s^2} - \frac{4 \cdot h_{mdot}}{k_A \cdot D} \cdot (T_{112} - T_{12}) - \frac{4m_{dot} \cdot C_P}{\pi \cdot k_A \cdot D^2 \cdot s} \cdot (T_{112} - T_{111}) = 0$$

Page 17

ARES CORPORATION	CALCULATION SHEET		
Project No. 0509206.01	Calculation No. 0509206.01-M-004	Rev. No. 1	Page No. 147 of 159
Title: DBVS AWTE Thermal Load Inventory			
Prepared By: P.S. Lowery	Date: 2.14.06	Checked By: S.R. Pierce	Date: 2.15.06

DBVS AWTE Off-Gas Exhaust Line Thermal

Now include the heat loss through the insulation jacket to define the temperature on the outside surface of the jacket (the part exposed to the AWTE room conditions)

$$\frac{2\cdot\pi\cdot k_{ins}\cdot(T_{201}-T_1)\cdot\delta}{\ln\left(\frac{R_1}{R_0}\right)}+2\cdot\pi\cdot R_1\cdot\delta\cdot\left[\xi_V\cdot\left(\left|T_{201}-T_{room}\right|\right)^{\frac{1}{3}}\cdot(T_{201}-T_{room})+\sigma\cdot\varepsilon_{316}\cdot\left(T_{201}^{\ 4}-T_{room}^{\ 4}\right)\right]=0$$

$$\frac{2\cdot\pi\cdot k_{ins}\cdot(T_{202}-T_2)\cdot\delta}{\ln\left(\frac{R_1}{R_0}\right)}+2\cdot\pi\cdot R_1\cdot\delta\cdot\left[\xi_V\cdot\left(\left|T_{202}-T_{room}\right|\right)^{\frac{1}{3}}\cdot(T_{202}-T_{room})+\sigma\cdot\varepsilon_{316}\cdot\left(T_{202}^{\ 4}-T_{room}^{\ 4}\right)\right]=0$$

$$\frac{2\cdot\pi\cdot k_{ins}\cdot(T_{203}-T_3)\cdot\delta}{\ln\left(\frac{R_1}{R_0}\right)}+2\cdot\pi\cdot R_1\cdot\delta\cdot\left[\xi_V\cdot\left(\left|T_{203}-T_{room}\right|\right)^{\frac{1}{3}}\cdot(T_{203}-T_{room})+\sigma\cdot\varepsilon_{316}\cdot\left(T_{203}^{\ 4}-T_{room}^{\ 4}\right)\right]=0$$

$$\frac{2\cdot\pi\cdot k_{ins}\cdot(T_{204}-T_4)\cdot\delta}{\ln\left(\frac{R_1}{R_0}\right)}+2\cdot\pi\cdot R_1\cdot\delta\cdot\left[\xi_V\cdot\left(\left|T_{204}-T_{room}\right|\right)^{\frac{1}{3}}\cdot(T_{204}-T_{room})+\sigma\cdot\varepsilon_{316}\cdot\left(T_{204}^{\ 4}-T_{room}^{\ 4}\right)\right]=0$$

$$\frac{2\cdot\pi\cdot k_{ins}\cdot(T_{205}-T_5)\cdot\delta}{\ln\left(\frac{R_1}{R_0}\right)}+2\cdot\pi\cdot R_1\cdot\delta\cdot\left[\xi_V\cdot\left(\left|T_{205}-T_{room}\right|\right)^{\frac{1}{3}}\cdot(T_{205}-T_{room})+\sigma\cdot\varepsilon_{316}\cdot\left(T_{205}^{\ 4}-T_{room}^{\ 4}\right)\right]=0$$

$$\frac{2\cdot\pi\cdot k_{ins}\cdot(T_{206}-T_6)\cdot\delta}{\ln\left(\frac{R_1}{R_0}\right)}+2\cdot\pi\cdot R_1\cdot\delta\cdot\left[\xi_V\cdot\left(\left|T_{206}-T_{room}\right|\right)^{\frac{1}{3}}\cdot(T_{206}-T_{room})+\sigma\cdot\varepsilon_{316}\cdot\left(T_{206}^{\ 4}-T_{room}^{\ 4}\right)\right]=0$$

$$\frac{2\cdot\pi\cdot k_{ins}\cdot(T_{207}-T_7)\cdot\delta}{\ln\left(\frac{R_1}{R_0}\right)}+2\cdot\pi\cdot R_1\cdot\delta\cdot\left[\xi_V\cdot\left(\left|T_{207}-T_{room}\right|\right)^{\frac{1}{3}}\cdot(T_{207}-T_{room})+\sigma\cdot\varepsilon_{316}\cdot\left(T_{207}^{\ 4}-T_{room}^{\ 4}\right)\right]=0$$

CALCULATION SHEET

Project No. 0509206.01	Calculation No. 0509206.01-M-004	Rev. No. 1	Page No. 148 of 159
Title: DBVS AWTE Thermal Load Inventory			
Prepared By: P.S. Lowery	Date: 2.14.06	Checked By: S.R. Pierce	Date: 2.15.06

DBVS AWTE Off-Gas Exhaust Line Thermal

$$\frac{2\cdot\pi\cdot k_{ins}\cdot\left(T_{208}-T_{8}\right)\cdot\delta}{\ln\left(\frac{R_1}{R_0}\right)}+2\cdot\pi\cdot R_1\cdot\delta\cdot\left[\xi_V\left(\left|T_{208}-T_{room}\right|\right)^{\frac{1}{3}}\cdot\left(T_{208}-T_{room}\right)+\sigma\cdot\varepsilon_{316}\cdot\left(T_{208}^{\ 4}-T_{room}^{\ 4}\right)\right]=0$$

$$\frac{2\cdot\pi\cdot k_{ins}\cdot\left(T_{209}-T_{9}\right)\cdot\delta}{\ln\left(\frac{R_1}{R_0}\right)}+2\cdot\pi\cdot R_1\cdot\delta\cdot\left[\xi_V\left(\left|T_{209}-T_{room}\right|\right)^{\frac{1}{3}}\cdot\left(T_{209}-T_{room}\right)+\sigma\cdot\varepsilon_{316}\cdot\left(T_{209}^{\ 4}-T_{room}^{\ 4}\right)\right]=0$$

$$\frac{2\cdot\pi\cdot k_{ins}\cdot\left(T_{210}-T_{10}\right)\cdot\delta}{\ln\left(\frac{R_1}{R_0}\right)}+2\cdot\pi\cdot R_1\cdot\delta\cdot\left[\xi_V\left(\left|T_{210}-T_{room}\right|\right)^{\frac{1}{3}}\cdot\left(T_{210}-T_{room}\right)+\sigma\cdot\varepsilon_{316}\cdot\left(T_{210}^{\ 4}-T_{room}^{\ 4}\right)\right]=0$$

$$\frac{2\cdot\pi\cdot k_{ins}\cdot\left(T_{211}-T_{11}\right)\cdot\delta}{\ln\left(\frac{R_1}{R_0}\right)}+2\cdot\pi\cdot R_1\cdot\delta\cdot\left[\xi_V\left(\left|T_{211}-T_{room}\right|\right)^{\frac{1}{3}}\cdot\left(T_{211}-T_{room}\right)+\sigma\cdot\varepsilon_{316}\cdot\left(T_{211}^{\ 4}-T_{room}^{\ 4}\right)\right]=0$$

$$\frac{2\cdot\pi\cdot k_{ins}\cdot\left(T_{212}-T_{12}\right)\cdot\delta}{\ln\left(\frac{R_1}{R_0}\right)}+2\cdot\pi\cdot R_1\cdot\delta\cdot\left[\xi_V\left(\left|T_{212}-T_{room}\right|\right)^{\frac{1}{3}}\cdot\left(T_{212}-T_{room}\right)+\sigma\cdot\varepsilon_{316}\cdot\left(T_{212}^{\ 4}-T_{room}^{\ 4}\right)\right]=0$$

ARES CORPORATION	CALCULATION SHEET		
Project No. 0509206.01	Calculation No. 0509206.01-M-004	Rev. No. 1	Page No. 149 of 159
Title: DBVS AWTE Thermal Load Inventory			
Prepared By: P.S. Lowery	Date: 2.14.06	Checked By: S.R. Pierce	Date: 2.15.06

DBVS AWTE Off-Gas Exhaust Line Thermal

$$\begin{pmatrix} T1 \\ T2 \\ T3 \\ T4 \\ T5 \\ T6 \\ T7 \\ T8 \\ T9 \\ T10 \\ T11 \\ T12 \\ T101 \\ T102 \\ T103 \\ T104 \\ T105 \\ T106 \\ T107 \\ T108 \\ T109 \\ T110 \\ T111 \\ T112 \\ T201 \\ T202 \\ T203 \\ T204 \\ T205 \\ T206 \\ T207 \\ T208 \\ T209 \\ T210 \\ T211 \\ T212 \end{pmatrix} := \mathrm{Find}(T_1, T_2, T_3, T_4, T_5, T_6, T_7, T_8, T_9, T_{10}, T_{11}, T_{12}, T_{101}, T_{102}, T_{103}, T_{104}, T_{105}, T_{106}, T_{107}, T_{108}, T_{109}, T_{110},$$

Page 15

CALCULATION SHEET

Project No. 0509206.01	Calculation No. 0509206.01-M-004	Rev. No. 1	Page No. 150 of 159
Title: DBVS AWTE Thermal Load Inventory			
Prepared By: P.S. Lowery	Date: 2.14.06	Checked By: S.R. Pierce	Date: 2.15.06

DBVS AWTE Off-Gas Exhaust Line Thermal

Temperatures for the steel chute are ...

$T1 = 1.076 \times 10^3$ K	T1C := KtoC(T1)	T1C = 802.907
T2 = 914.459 K	T2C := KtoC(T2)	T2C = 641.309
T3 = 813.609 K	T3C := KtoC(T3)	T3C = 540.459
T4 = 763.129 K	T4C := KtoC(T4)	T4C = 489.979
T5 = 738.087 K	T5C := KtoC(T5)	T5C = 464.937
T6 = 726.052 K	T6C := KtoC(T6)	T6C = 452.902
T7 = 720.602 K	T7C := KtoC(T7)	T7C = 447.452
T8 = 717.568 K	T8C := KtoC(T8)	T8C = 444.418
T9 = 715.445 K	T9C := KtoC(T9)	T9C = 442.205
T10 = 713.708 K	T10C := KtoC(T10)	T10C = 440.555
T11 = 712.179 K	T11C := KtoC(T11)	T11C = 439.029
T12 = 710.917 K	T12C := KtoC(T12)	T12C = 437.767

Temperature for the air column inside the chute are ...

T101 = 755.987 K	T101C := KtoC(T101)	T101C = 482.837
T102 = 762.341 K	T102C := KtoC(T102)	T102C = 488.991
T103 = 764.295 K	T103C := KtoC(T103)	T103C = 491.145
T104 = 764.246 K	T104C := KtoC(T104)	T104C = 491.096
T105 = 763.351 K	T105C := KtoC(T105)	T105C = 490.008
T106 = 761.598 K	T106C := KtoC(T106)	T106C = 488.448
T107 = 759.882 K	T107C := KtoC(T107)	T107C = 486.732
T108 = 758.311 K	T108C := KtoC(T108)	T108C = 485.961
T109 = 756.326 K	T109C := KtoC(T109)	T109C = 483.176
T110 = 754.542 K	T110C := KtoC(T110)	T110C = 481.392
T111 = 752.768 K	T111C := KtoC(T111)	T111C = 479.618
T112 = 751.047 K	T112C := KtoC(T112)	T112C = 477.867

CALCULATION SHEET

Project No. 0509206.01	Calculation No. 0509206.01-M-004	Rev. No. 1	Page No. 151 of 159
Title: DBVS AWTE Thermal Load Inventory			
Prepared By: P.S. Lowery	Date: 2.14.06	Checked By: S.R. Pierce	Date: 2.15.06

DBVS AWTE Off-Gas Exhaust Line Thermal

Temperature on the outside surface of the Insulation jacket are ...

T201 = 400.643 K	T201C := KtoC(T201)	T201C = 127.493
T202 = 384.042 K	T202C := KtoC(T202)	T202C = 110.892
T203 = 373.001 K	T203C := KtoC(T203)	T203C = 99.851
T204 = 367.241 K	T204C := KtoC(T204)	T204C = 94.091
T205 = 364.319 K	T205C := KtoC(T205)	T205C = 91.169
T206 = 362.898 K	T206C := KtoC(T206)	T206C = 89.748
T207 = 362.251 K	T207C := KtoC(T207)	T207C = 89.101
T208 = 361.89 K	T208C := KtoC(T208)	T208C = 88.74
T209 = 361.637 K	T209C := KtoC(T209)	T209C = 88.487
T210 = 361.429 K	T210C := KtoC(T210)	T210C = 88.279
T211 = 361.243 K	T211C := KtoC(T211)	T211C = 88.093
T212 = 361.096 K	T212C := KtoC(T212)	T212C = 87.946

CALCULATION SHEET

Project No. 0509206.01	Calculation No. 0509206.01-M-004	Rev. No. 1	Page No. 152 of 159
Title: DBVS AWTE Thermal Load Inventory			
Prepared By: P.S. Lowery	Date: 2.14.06	Checked By: S.R. Pierce	Date: 2.15.06

DBVS AWTE Off-Gas Exhaust Line Thermal

$$T_{plot} := \begin{pmatrix} T1C \\ T2C \\ T3C \\ T4C \\ T5C \\ T6C \\ T7C \\ T8C \\ T9C \\ T10C \\ T11C \\ T12C \end{pmatrix} \qquad zplot := \begin{pmatrix} 0.5 \\ 1.5 \\ 2.5 \\ 3.5 \\ 4.5 \\ 5.5 \\ 6.5 \\ 7.5 \\ 8.5 \\ 9.5 \\ 10.5 \\ 11.5 \end{pmatrix} ft$$

Off-Gas ExhaustLine Wall Temperature Profile

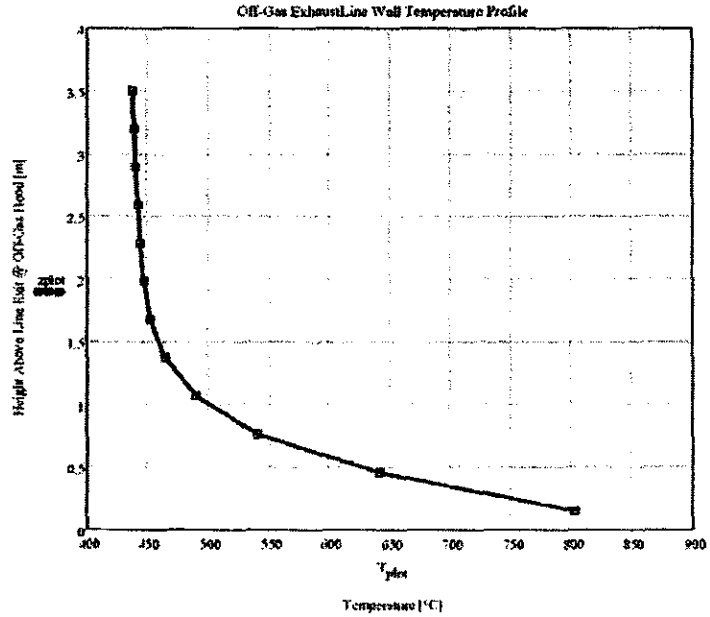

Page 18

ARES CORPORATION	CALCULATION SHEET		
Project No. 0509206.01	Calculation No. 0509206.01-M-004	Rev. No. 1	Page No. 153 of 159
Title: DBVS AWTE Thermal Load Inventory			
Prepared By: P.S. Lowery	Date: 2.14.06	Checked By: S.R. Pierce	Date: 2.15.06

DBVS AWTE Off-Gas Exhaust Line Thermal

$$T_{plot} := \begin{pmatrix} T201C \\ T202C \\ T203C \\ T204C \\ T205C \\ T206C \\ T207C \\ T208C \\ T209C \\ T210C \\ T211C \\ T212C \end{pmatrix} \qquad zplot_i := \begin{pmatrix} 0.5 \\ 1.5 \\ 2.5 \\ 3.5 \\ 4.5 \\ 5.5 \\ 6.5 \\ 7.5 \\ 8.5 \\ 9.5 \\ 10.5 \\ 11.5 \end{pmatrix} ft$$

Off-Gas Exhaust Line Exterior Wall Temperature Profile

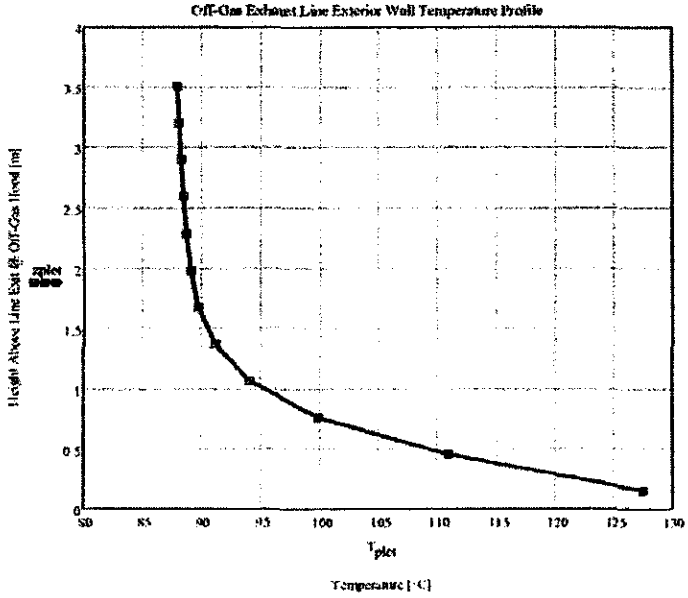

Page 19

CALCULATION SHEET

Project No. 0509206.01	Calculation No. 0509206.01-M-004	Rev. No. 1	Page No. 154 of 159
Title: DBVS AWTE Thermal Load Inventory			
Prepared By: P.S. Lowery	Date: 2.14.06	Checked By: S.R. Pierce	Date: 2.15.06

DBVS AWTE Off-Gas Exhaust Line Thermal

Now compute the heat loss from the chute to the AWTE room ...

$$Q := \begin{bmatrix} 2\pi\cdot R_1\cdot\delta\left[\xi_V\cdot\left(\left|T201 - T_{room}\right|\right)^{\frac{1}{3}}\cdot\left(T201 - T_{room}\right) + \sigma\cdot\varepsilon_{316}\cdot\left(T201^4 - T_{room}^4\right)\right] \\ 2\pi\cdot R_1\cdot\delta\left[\xi_V\cdot\left(\left|T202 - T_{room}\right|\right)^{\frac{1}{3}}\cdot\left(T202 - T_{room}\right) + \sigma\cdot\varepsilon_{316}\cdot\left(T202^4 - T_{room}^4\right)\right] \\ 2\pi\cdot R_1\cdot\delta\left[\xi_V\cdot\left(\left|T203 - T_{room}\right|\right)^{\frac{1}{3}}\cdot\left(T203 - T_{room}\right) + \sigma\cdot\varepsilon_{316}\cdot\left(T203^4 - T_{room}^4\right)\right] \\ 2\pi\cdot R_1\cdot\delta\left[\xi_V\cdot\left(\left|T204 - T_{room}\right|\right)^{\frac{1}{3}}\cdot\left(T204 - T_{room}\right) + \sigma\cdot\varepsilon_{316}\cdot\left(T204^4 - T_{room}^4\right)\right] \\ 2\pi\cdot R_1\cdot\delta\left[\xi_V\cdot\left(\left|T205 - T_{room}\right|\right)^{\frac{1}{3}}\cdot\left(T205 - T_{room}\right) + \sigma\cdot\varepsilon_{316}\cdot\left(T205^4 - T_{room}^4\right)\right] \\ 2\pi\cdot R_1\cdot\delta\left[\xi_V\cdot\left(\left|T206 - T_{room}\right|\right)^{\frac{1}{3}}\cdot\left(T206 - T_{room}\right) + \sigma\cdot\varepsilon_{316}\cdot\left(T206^4 - T_{room}^4\right)\right] \\ 2\pi\cdot R_1\cdot\delta\left[\xi_V\cdot\left(\left|T207 - T_{room}\right|\right)^{\frac{1}{3}}\cdot\left(T207 - T_{room}\right) + \sigma\cdot\varepsilon_{316}\cdot\left(T207^4 - T_{room}^4\right)\right] \\ 2\pi\cdot R_1\cdot\delta\left[\xi_V\cdot\left(\left|T208 - T_{room}\right|\right)^{\frac{1}{3}}\cdot\left(T208 - T_{room}\right) + \sigma\cdot\varepsilon_{316}\cdot\left(T208^4 - T_{room}^4\right)\right] \\ 2\pi\cdot R_1\cdot\delta\left[\xi_V\cdot\left(\left|T209 - T_{room}\right|\right)^{\frac{1}{3}}\cdot\left(T209 - T_{room}\right) + \sigma\cdot\varepsilon_{316}\cdot\left(T209^4 - T_{room}^4\right)\right] \\ 2\pi\cdot R_1\cdot\delta\left[\xi_V\cdot\left(\left|T210 - T_{room}\right|\right)^{\frac{1}{3}}\cdot\left(T210 - T_{room}\right) + \sigma\cdot\varepsilon_{316}\cdot\left(T210^4 - T_{room}^4\right)\right] \\ 2\pi\cdot R_1\cdot\delta\left[\xi_V\cdot\left(\left|T211 - T_{room}\right|\right)^{\frac{1}{3}}\cdot\left(T211 - T_{room}\right) + \sigma\cdot\varepsilon_{316}\cdot\left(T211^4 - T_{room}^4\right)\right] \\ 2\pi\cdot R_1\cdot\delta\left[\xi_V\cdot\left(\left|T212 - T_{room}\right|\right)^{\frac{1}{3}}\cdot\left(T212 - T_{room}\right) + \sigma\cdot\varepsilon_{316}\cdot\left(T212^4 - T_{room}^4\right)\right] \end{bmatrix}$$

CALCULATION SHEET

Project No. 0509206.01	Calculation No. 0509206.01-M-004	Rev. No. 1	Page No. 155 of 159
Title: DBVS AWTE Thermal Load Inventory			
Prepared By: P.S. Lowery	Date: 2.14.06	Checked By: S.R. Pierce	Date: 2.15.06

DBVS AWTE Oil-Gas Exhaust Line Thermal

	1	[illegible]
	2	341,842
	3	285,466
	4	223,002
	5	200,268
	6	188,172
Q =	7	183,801	W
	8	181,369
	9	180,017
	10	179,037
	11	178,294
	12	177,615
	13	177,058

Compute the total heat load to the AWTE room ...

$$Q_{sum} := \sum_{n=1}^{12} Q_n \qquad Q_{sum} = 2.48\,kW$$

Page 21

ARES CORPORATION	CALCULATION SHEET		
Project No. 0509206.01	Calculation No. 0509206.01-M-004	Rev. No. 1	Page No. 156 of 159
Title: DBVS AWTE Thermal Load Inventory			
Prepared By: P.S. Lowery	Date: 2.14.06	Checked By: S.R. Pierce	Date: 2.15.06

APPENDIX G

MATHCAD MODEL TO ESTIMATE THE TEMPERATURE DISTRIBUTION AND HEAT LOAD FROM THE OFF-GAS HOOD TO THE AWTE FLOOR

A.R.E.S. CORPORATION	CALCULATION SHEET		
Project No. 0509206.01	Calculation No. 0509206.01-M-004	Rev. No. 1	Page No. 157 of 159
Title: DBVS AWTE Thermal Load Inventory			
Prepared By: P.S. Lowery	Date: 2.14.06	Checked By: S.R. Pierce	Date: 2.15.06

$degC = 1 \qquad degF = 1$

$FtoC(x) := \frac{5}{9}\left(\frac{x}{degF} - 32\right)$

$CtoK(x) := \left(\frac{x}{degC} + 273.15\right)K$

$KtoC(x) := \left(\frac{x}{K} - 273.15\right)degC$

$\sigma := 5.67 \cdot 10^{-8} \frac{W}{m^2 \cdot K^4}$

Natural Convection Heat Transfer Coefficient Correlation Parameters

Natural convection heat transfer coefficients are modeled using correlations from Holman, Heat Transfer, 3rd Edition, p. 219. They are of the form ...

$h = \xi_o (\Delta T)^{1/3}$

where the correlation parameter, ξ_o, reflects the shape and orientation of the surface (the subscript "o" indicates the orientation -- e.g., V -> vertical, HD -> horizontal, heated surface facing down, and so on).

$\xi_{HD} := 0.691 \frac{W}{m^2 \cdot \sqrt[3]{K^4}}$

$\varepsilon_{stl} := 0.85 \qquad k_{stl} := 60.5 \frac{W}{m \cdot K}$

$h := 16in \qquad w_1 := 5.5ft \qquad w_2 := 3.5ft \qquad L := 22ft \qquad \theta := 33deg \qquad \delta_{AWTE} := 3.5in$

$A_{AWTE} := (3ft + w_1 + 3ft) \cdot (3ft + L + 3ft) \qquad A_{AWTE} = 29.915m^2$

$A_{hood} := w_2 \cdot L + 2\left[\frac{1}{2} \cdot h \cdot (w_1 + w_2) + L \frac{h}{\sin(\theta)}\right] \qquad A_{hood} = 15.185m^2$

$R_{HA} := \frac{a}{\left(\frac{1 - \varepsilon_{stl}}{\varepsilon_{stl} A_{hood}}\right) + \frac{1}{A_{hood}} + \left(\frac{1 - \varepsilon_{stl}}{\varepsilon_{stl} A_{AWTE}}\right)} \qquad R_{HA} = 6.801 \cdot 10^{-7} \frac{1}{K^4} W$

ARES CORPORATION	CALCULATION SHEET		
Project No. 0509206.01	Calculation No. 0509206.01-M-004	Rev. No. 1	Page No. 158 of 159
Title: DBVS AWTE Thermal Load Inventory			
Prepared By: P.S. Lowery	Date: 2.14.06	Checked By: S.R. Pierce	Date: 2.15.06

Specify boundary condition temperatures for the hood and AWTE floor upper surface ...

$T_H := CtoK(570degC)$ $\quad T_H = 843.15\ K$

$T_2 := CtoK(FtoC(77degF))$ $\quad T_2 = 298.15\ K$

Initial guess for the temperature of the AWTE floor bottom surface ...

$T_1 := 500K$

Given

$$R_{HA}\cdot\left(T_1^4 - T_H^4\right) + \delta_{HD}\cdot A_{AWTE}\cdot\left[\left|T_1 - \left(\frac{T_1 + T_H}{2}\right)\right|\right]^{\frac{1}{3}}\cdot\left[T_1 - \left(\frac{T_1 + T_H}{2}\right)\right] + \frac{k_{air}\cdot A_{AWTE}}{\delta_{AWTE}}\cdot\left(T_1 - T_2\right) = 0$$

Find the temperature of the AWTE floor lower surface ...

$T1 := Find(T_1)$

$T1 = 316.411\ K$

$T1C := KtoC(T1)$ $\quad T1C = 43.261\ degC$

$T2C := KtoC(T_2)$ $\quad T2C = 25\ degC$

$$R_{HA}\cdot\left(T1^4 - T_H^4\right) + \delta_{HD}\cdot A_{AWTE}\cdot\left[\left|T1 - \left(\frac{T1 + T_H}{2}\right)\right|\right]^{\frac{1}{3}}\cdot\left[T1 - \left(\frac{T1 + T_H}{2}\right)\right] + \frac{k_{air}\cdot A_{AWTE}}{\delta_{AWTE}}\cdot\left(T1 - T_2\right) = 5.821\cdot 10^{-11}\ W$$

CALCULATION SHEET

Project No. 0509206.01	Calculation No. 0509206.01-M-004	Rev. No. 1	Page No. 159 of 159
Title: DBVS AWTE Thermal Load Inventory			
Prepared By: P.S. Lowery	Date: 2.14.06	Checked By: S.R. Pierce	Date: 2.15.06

$T1 = 316.411\ K$

$T_2 = 298.15\ K$

$T_H = 843.15\ K$

Load to the AWTE floor cooling system is ...

$$\frac{k_{air} \cdot A_{AWTE}}{\delta_{AWTE}} \cdot (T1 - T_2) = 371.768\ kW$$

$$R_{HA} \cdot \left(T1^4 - T_H^4\right) = -336.872\ kW$$

$$\xi_{HD} \cdot A_{AWTE} \left[\left[T1 - \left(\frac{T1 + T_H}{2}\right)\right]\right]^{\frac{1}{3}} \cdot \left[T1 - \left(\frac{T1 + T_H}{2}\right)\right] = -34.897\ kW$$

$$\frac{k_{air} \cdot A_{AWTE}}{\delta_{AWTE}} \cdot (T1 - T_2) = 371.768\ kW$$

CALCULATION SHEET

amec

CALC. NO.:	145579-D-CA-007	REV:	0	DATE:	February 20, 2006
CALC. TITLE:	Heat Transfer Analysis - AWTE				
PROJECT NO.:	145579	PROJECT TITLE:	Final DBVS Design		

Attachment 2
Conceptual DBVS Design Drawings
(9 pages including Attachment Cover)

Drawing Number	Title	Revision	Pages
M101	AWTE ICV Box Lid Material Feed Port	G	1
M102	AWTE ICV Box Lid Inlet & Exhaust Ports	G	1
M201	AWTE ICV Box Lid Port Details	G	1
M202	AWTE ICV Box Lid Port Details	G	1
M203	AWTE ICV Box Lid Port Details	G	1
M204	AWTE ICV Box Lid Port Details	G	1
M301	AWTE Room HVAC Plan	G	1
M302	AWTE Room Details	G	1
	Total Number of Drawing Pages		8

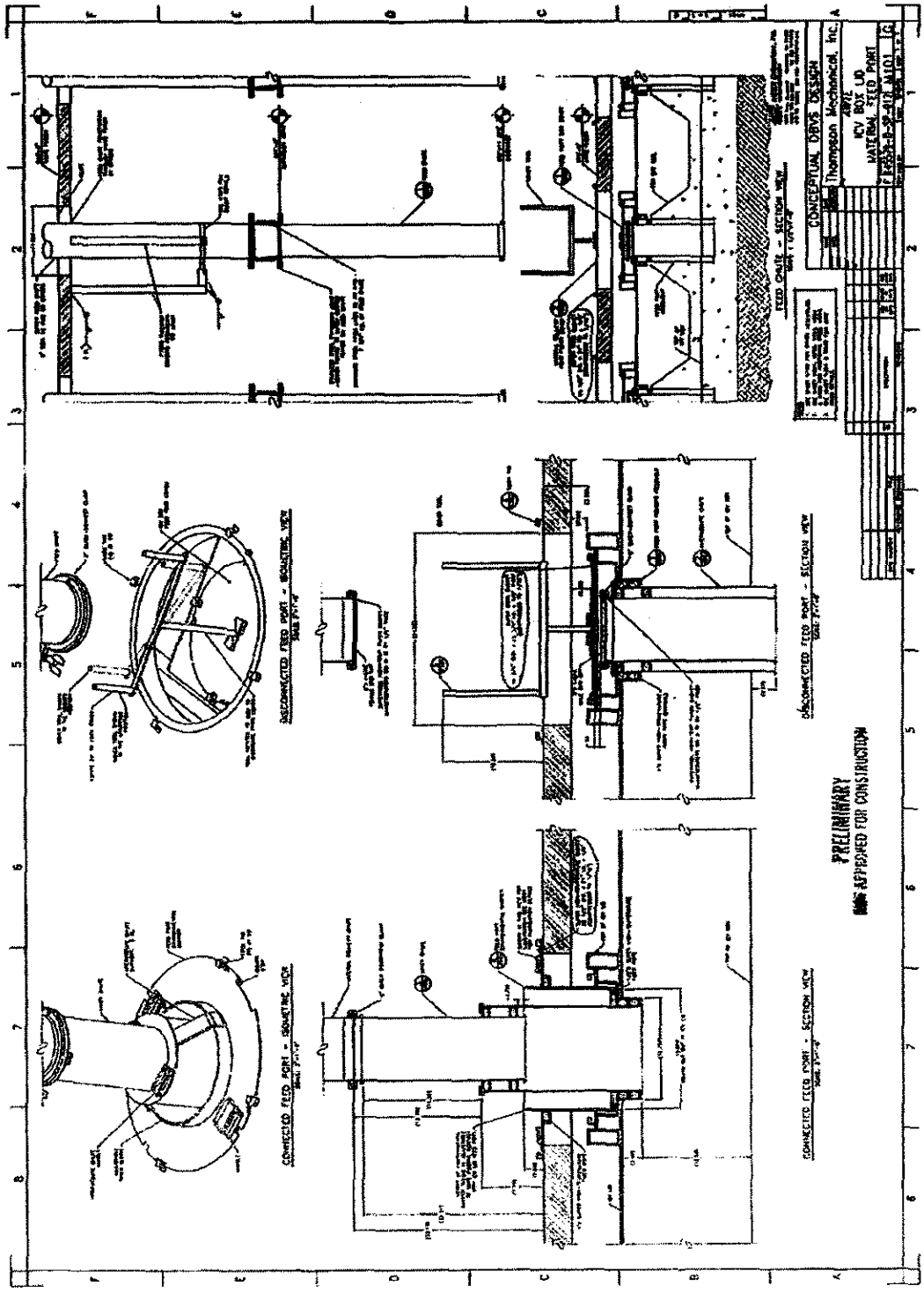
CONCEPTUAL DRYS DESIGN
Thomason Mechanical, Inc.
HCV BOX LID
MATERIAL FEED PORT
DISCONNECTED FEED PORT - ISOMETRIC VIEW
DISCONNECTED FEED PORT - SECTION VIEW
CONNECTED FEED PORT - ISOMETRIC VIEW
CONNECTED FEED PORT - SECTION VIEW
PRELIMINARY
NOT APPROVED FOR CONSTRUCTION

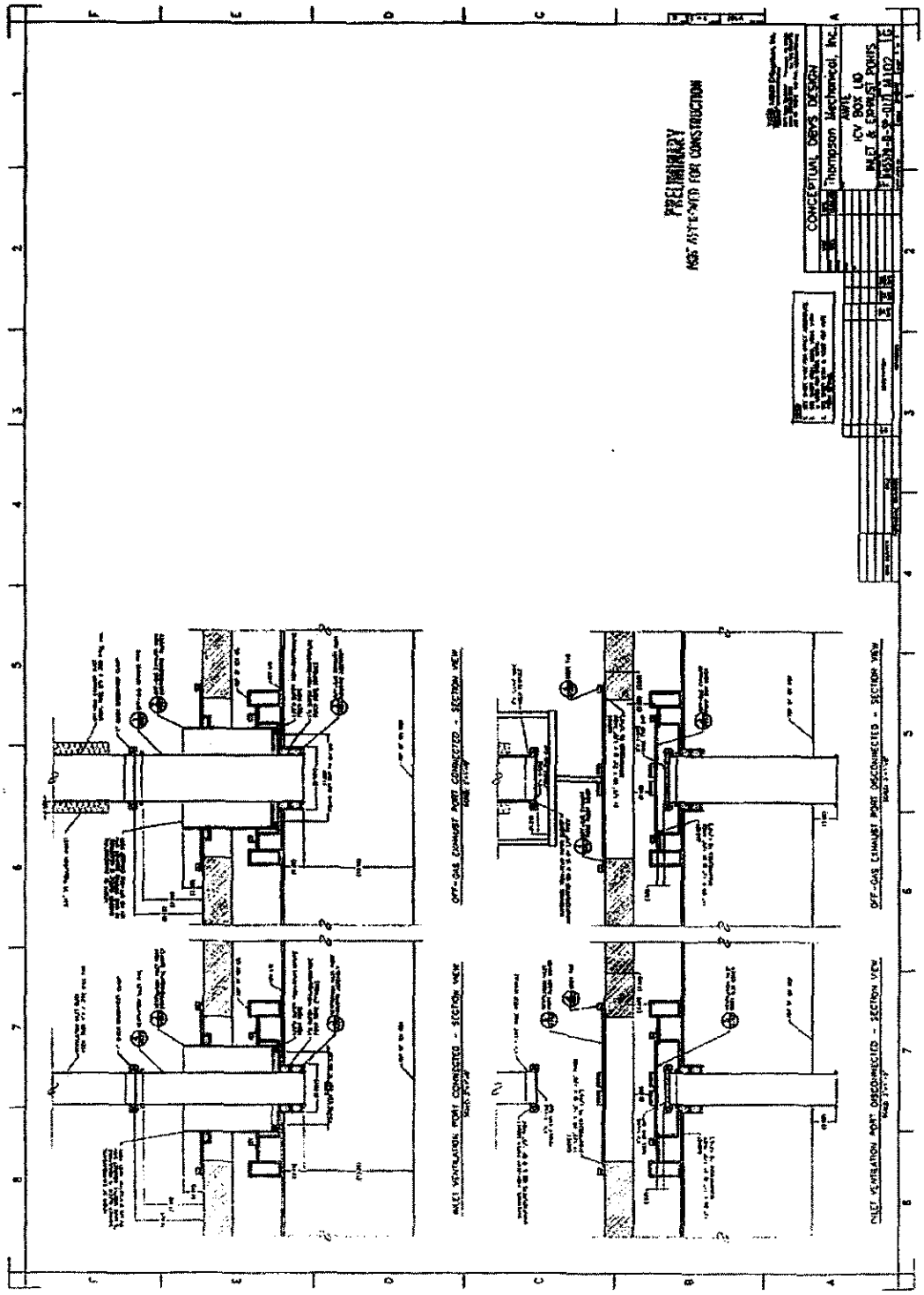
PRELIMINARY
NOT REVIEWED FOR CONSTRUCTION
CONCEPTUAL DRYS DESIGN
Thompson Mechanical, Inc.
ICV BOX LID
INLET & EXHAUST PORTS
INLET VENTILATION PORT CONNECTED - SECTION VIEW
OFF-GAS EXHAUST PORT CONNECTED - SECTION VIEW
INLET VENTILATION PORT DISCONNECTED - SECTION VIEW
OFF-GAS EXHAUST PORT DISCONNECTED - SECTION VIEW

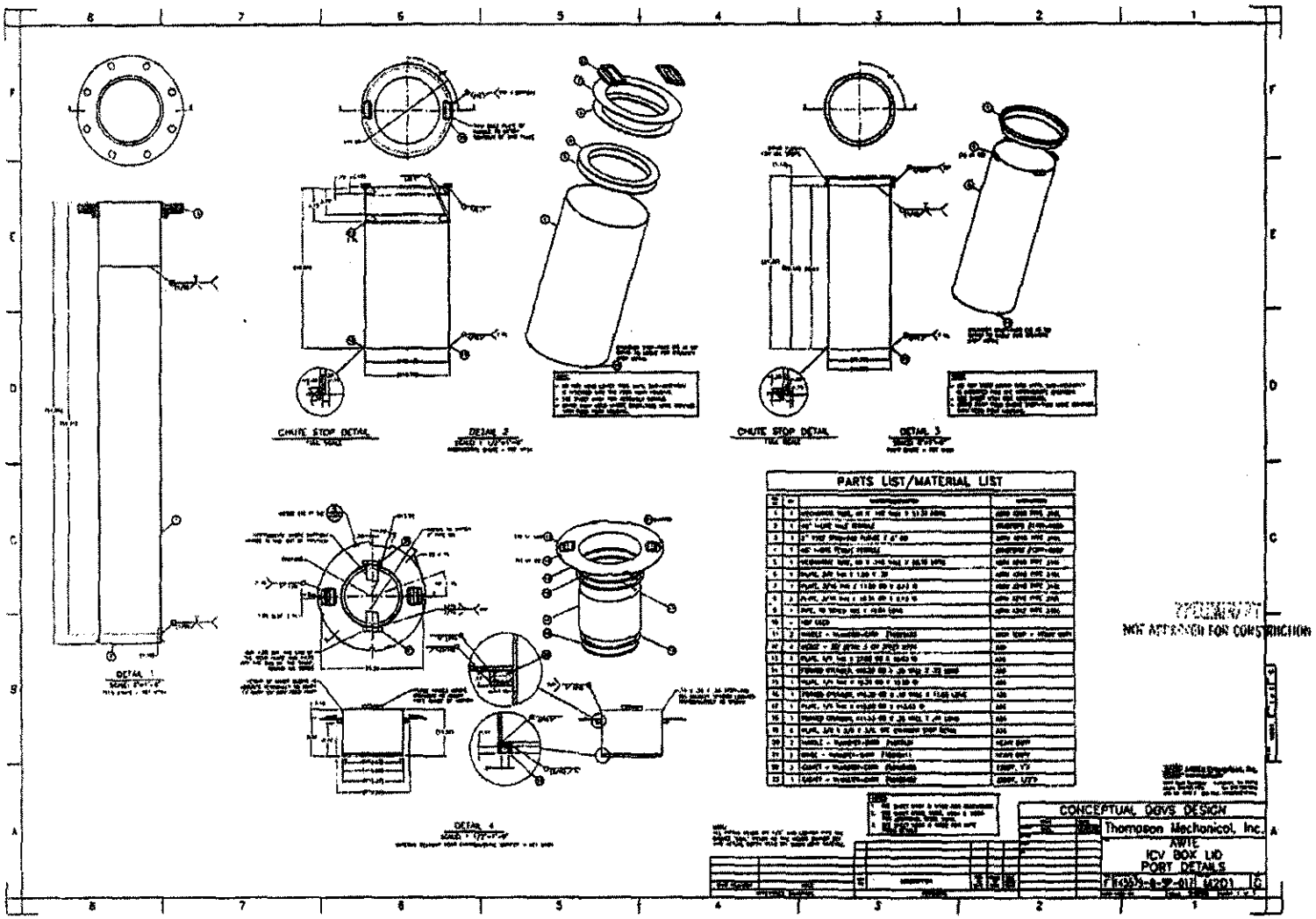
CHUTE STOP DETAIL
DETAIL 2
CHUTE STOP DETAIL
DETAIL 3
DETAIL 1
DETAIL 4
PARTS LIST/MATERIAL LIST
NOT APPROVED FOR CONSTRUCTION
CONCEPTUAL DGVS DESIGN
Thompson Mechanical, Inc.
AWTE
ICV BOX LID
PORT DETAILS

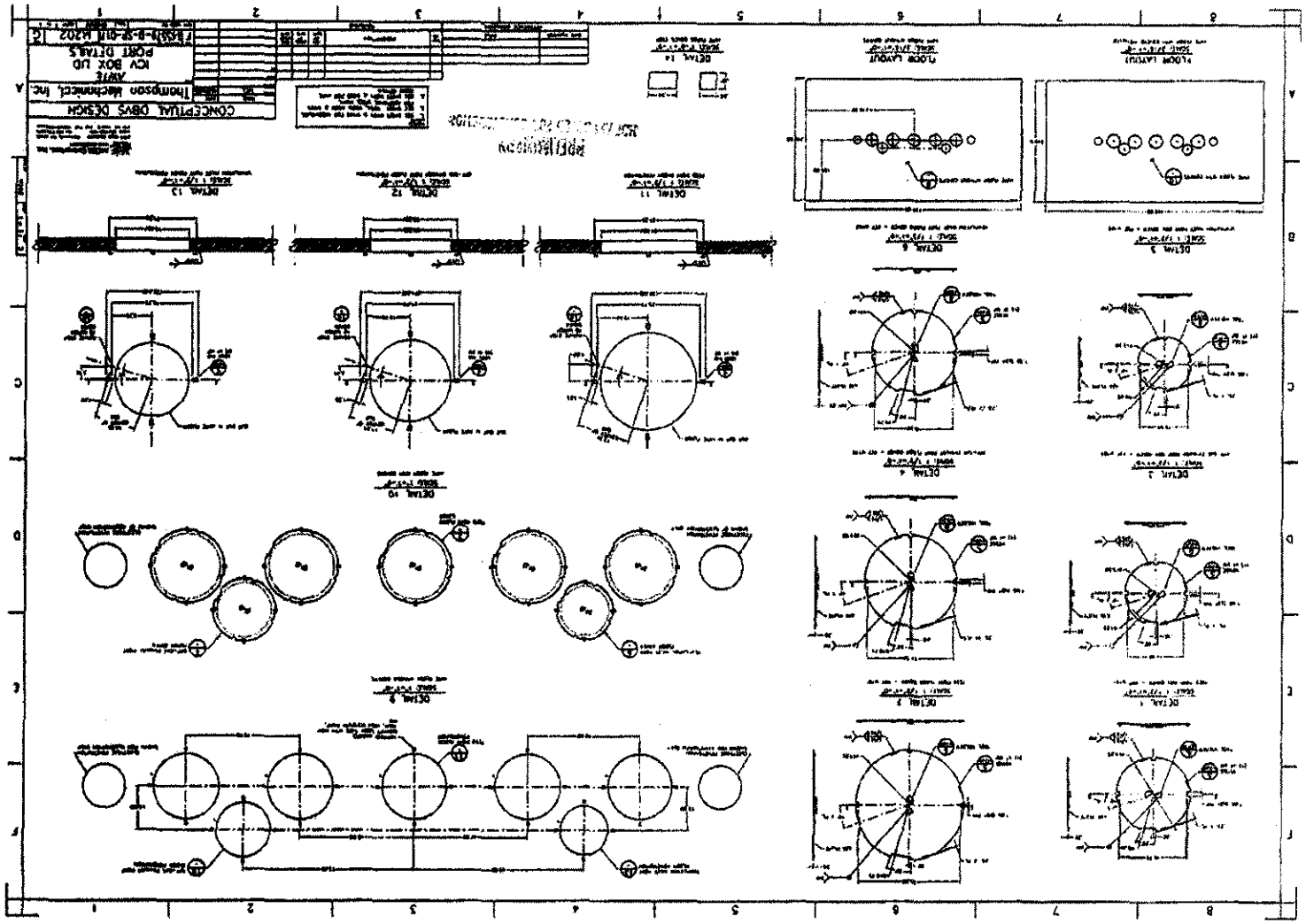
CONCEPTUAL DBVS DESIGN
Thompson Mechanical, Inc.
ICV BOX LID
PORT DTLS
DETAIL 1
DETAIL 2
DETAIL 3
DETAIL 4
DETAIL 5
DETAIL 6
DETAIL 7
DETAIL 8
DETAIL 9
DETAIL 10
DETAIL 11
DETAIL 12
DETAIL 13
DETAIL 14
FLOOR LAYOUT
FLOOR LAYOUT

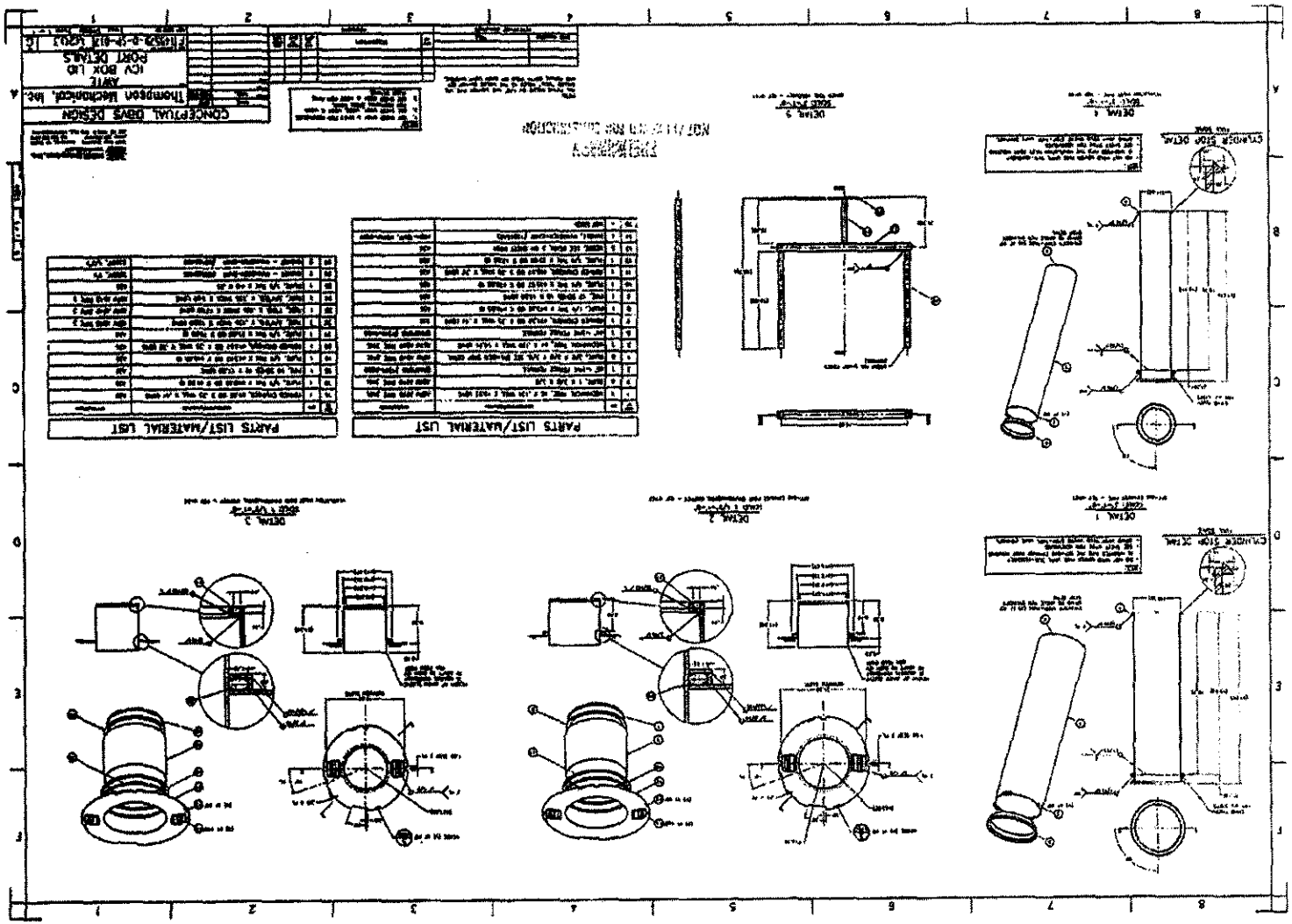
PARTS LIST/MATERIAL LIST
PARTS LIST/MATERIAL LIST
CONCEPTUAL GBWS DESIGN
Thompson Machinecraft, Inc.
ICV BOX LID
PORT DETAILS
DETAIL 1
DETAIL 2
DETAIL 3
DETAIL 4
CYLINDER STOP DETAIL
CYLINDER STOP DETAIL

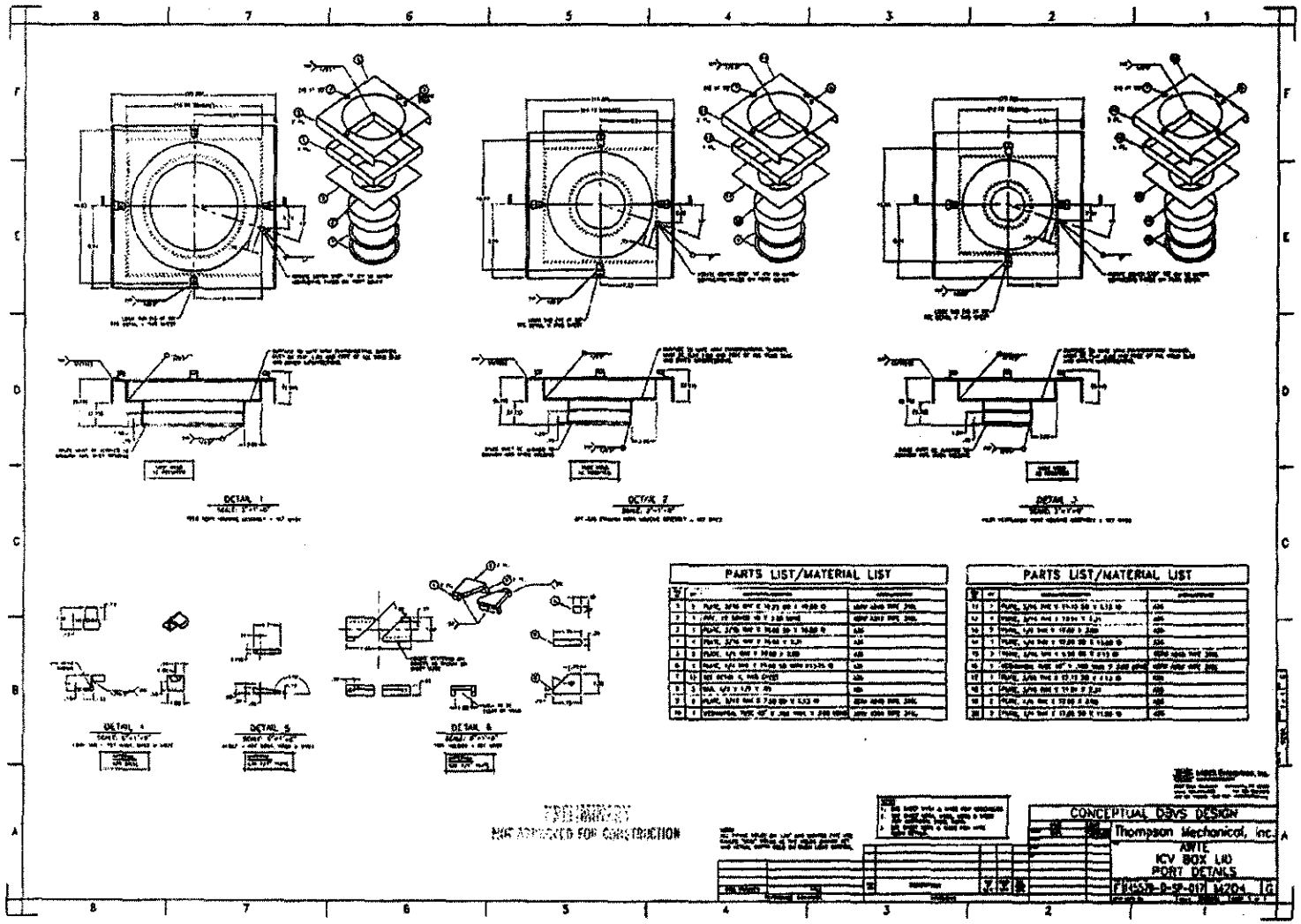
DETAIL 1
DETAIL 2
DETAIL 3
DETAIL 4
DETAIL 5
DETAIL 6
PARTS LIST/MATERIAL LIST
PARTS LIST/MATERIAL LIST
PRELIMINARY
NOT APPROVED FOR CONSTRUCTION
CONCEPTUAL DSVS DESIGN
Thompson Mechanical, Inc.
AWTE
ICV BOX LID
PORT DETAILS

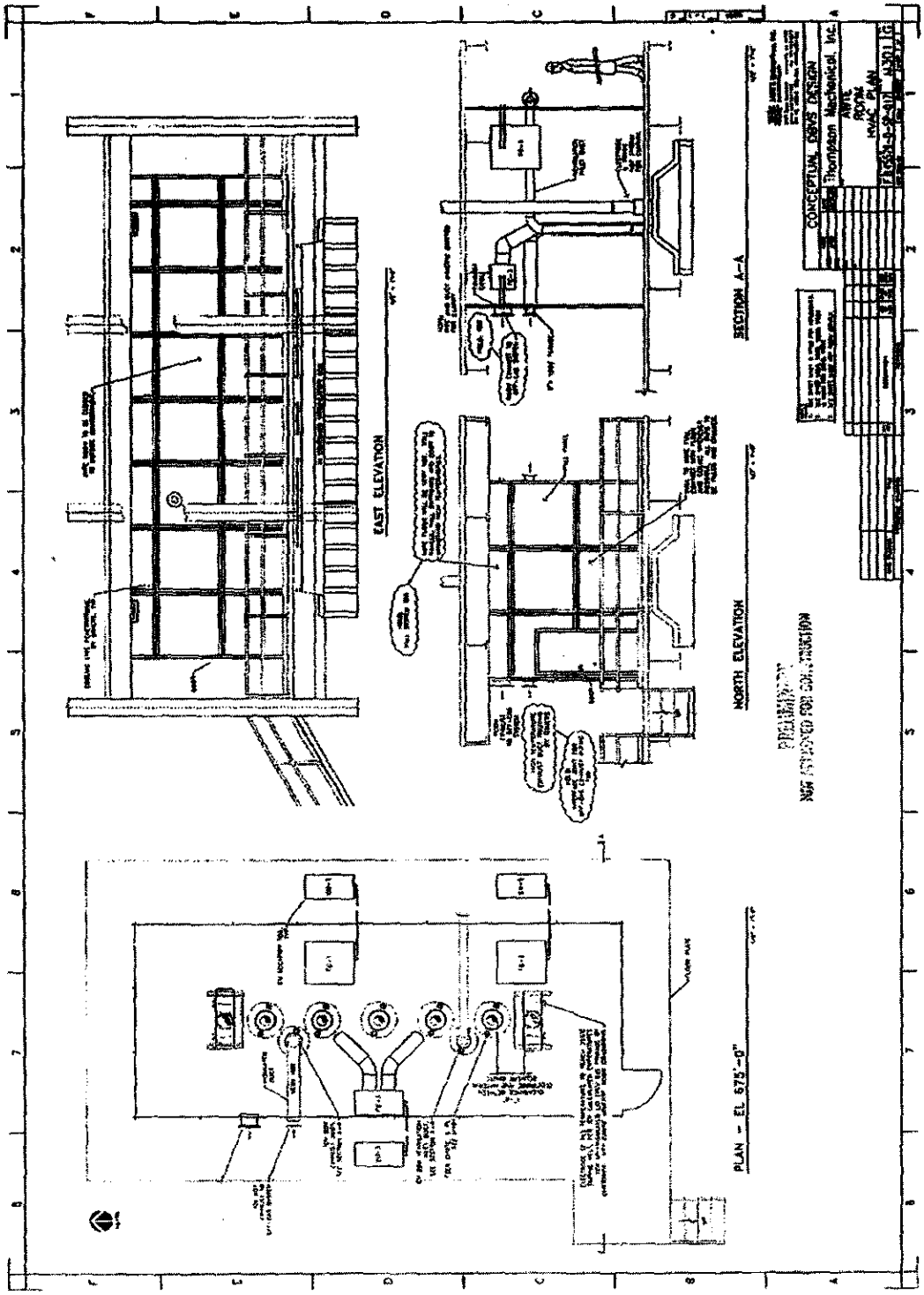
EAST ELEVATION
SECTION A-A
NORTH ELEVATION
PLAN - EL 675'-0"
CONCEPTUAL DBVS DESIGN
Thompson Mechanical, Inc.
AWTE
ROOM
HVAC PLAN

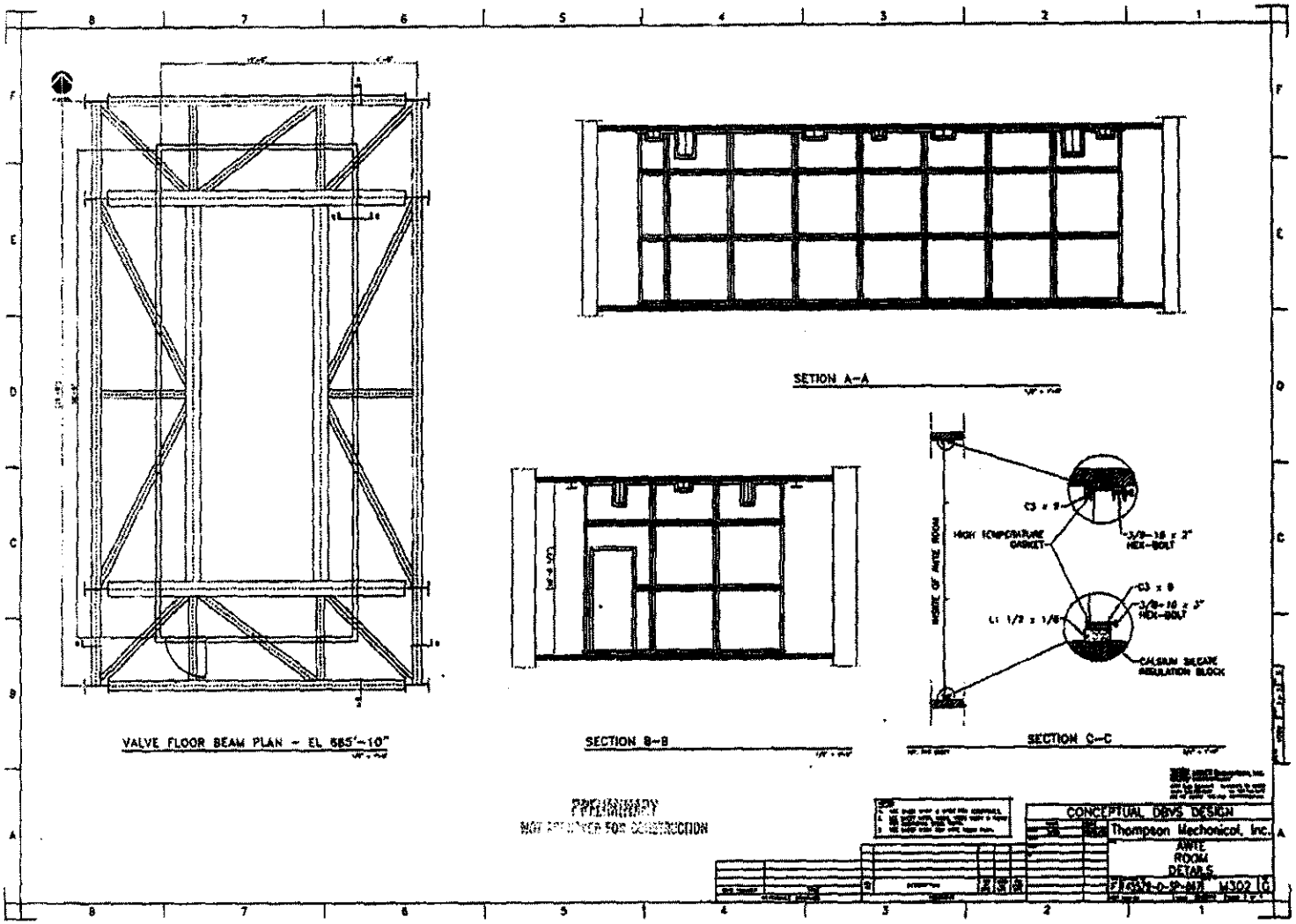
VALVE FLOOR BEAM PLAN - EL 585'-10"
SECTION A-A
SECTION B-B
SECTION C-C
HIGH TEMPERATURE GASKET
HEX-BOLT
HEX-BOLT
CONCEPTUAL DBVS DESIGN
Thompson Mechanical, Inc.
AWTE ROOM DETAILS

This page intentionally left blank.

CALCULATION DESIGN VERIFICATION CHECKLIST

Task/Project #: [1] DBVS A77977

Calculation Number: [2] 145579-D-CA-007

Revision [3] Ø

Safety Related? [4] N

Reviewer/Checker (print name): [5] KJ McCRACKEN

Reviewer performed or supervised subject calculation.

X NO ___ YES Justification Attachment UTILIZED QUALIFIED SUPPLIER [6] ___ pages

Alternate Verification method approved ___ [7] ___ Method N/A

Date [8] 2/20/06

ITEM (S) CHECKED	ACCEPT Y/N [9]	OBJECTIVE EVIDENCE SHEETS [10]	INITIAL/DATE [11]
1. Cover forms properly completed.	Y	SHT 1	[illegible] 2/20/06
2. Calculation Sheet headers complete with calc. no., rev., etc.	Y	SHT 1-4	[illegible] 2/20/06
3. Calculation Sheet contents complete per format.	Y	SHT 1-4	[illegible] 2/20/06
4. Listed attachments included.	Y	SHT 1	[illegible] 2/20/06
5. Calculation Objective clearly described.	Y	SHT 2	[illegible] 2/20/06
6. Criteria are suitable and properly referenced to task-specific documents.	Y	SHT 3	[illegible] 2/20/06
7. Assumptions and data described and attached or referenced to task documents.	Y	SHT 8-17 ATT 1	[illegible] 2/20/06
8. Calculation method identified and appropriate for the design activity.	Y	APPS C-G ATT 1	[illegible] 2/20/06
9. Calculation results reasonable and correctly described in Results & Conclusions.	Y	SHT 3&4	[illegible] 2/20/06
10. Computer Program identified with version and revision.	N/A		[illegible] 2/20/06
11. Computer Program references method used, etc.	N/A		[illegible] 2/20/06
12. Computer input/output provided.	N/A		[illegible] 2/20/06
13. Computer runs traceable to calculation.	N/A		[illegible] 2/20/06
14. Computer input data within permissible design input range.	N/A		[illegible] 2/20/06
15. Computer Program validation/verification addressed.	N/A		[illegible] 2/20/06

REMARKS [12]
NONE

[illegible] McCracken
[13] KJ McCRACKEN Date 2/20/06
Checker Print Name & Signature

[14] J. LUEN [illegible] Date 2/20/06
Originator Print Name & Signature

EP 3.9-4F October 2003

This page intentionally left blank.

Subcontractor Calculation Review Checklist.

Subject: **Heat Transfer Analysis - AWTE**

The subject document has been reviewed by the undersigned.
The checker reviewed and verified the following items as applicable.

Documents Reviewed: **145579-D-CA-007, Rev. 0**

Analysis Performed By: **AMEC/DMJM**

- Design Input
- Basic Assumptions
- Approach/Design Methodology
- Consistency with item or document supported by the calculation
- Conclusion/Results Interpretation
- Impact on existing requirements
- _____

Checker (printed name, signature, and date): **M. W. Leonard** M.W. Leonard 2/23/06

Organizational Manager (printed name, signature and date): **D. H. Shuford** David H. Shuford 2/27/06

This page intentionally left blank.

APPENDIX C4

DRIED WASTE HANDLING SYSTEM

Drawing or Sketch	Revision	Title	Page
B-145579-33-F-0401	C	Bulk Vitrification Instrument Loop Diagram 33-L-401	C4-5
B-145579-33-F-0402	C	Bulk Vitrification Instrument Loop Diagram 33-P-402	C4-6
B-145579-33-F-0403	C	Bulk Vitrification Instrument Loop Diagram 33-Y-403	C4-7
B-145579-33-F-0404	C	Bulk Vitrification Instrument Loop Diagram 33-Y-404	C4-8
B-145579-33-F-0406	C	Bulk Vitrification Instrument Loop Diagram 33-K-406	C4-9
B-145579-33-F-0407	C	Bulk Vitrification Instrument Loop Diagram 33-Y-407	C4-10
B-145579-33-F-0410	C	Bulk Vitrification Instrument Loop Diagram 33-K-410	C4-11
B-145579-33-F-0411	C	Bulk Vitrification Instrument Loop Diagram 33-Y-411	C4-12
B-145579-33-F-0412	C	Bulk Vitrification Instrument Loop Diagram 33-P-412	C4-13
B-145579-33-F-0413	C	Bulk Vitrification Instrument Loop Diagram 33-H-413	C4-14
B-145579-33-F-0414	D	Bulk Vitrification Instrument Loop Diagram 33-H-414	C4-15
B-145579-33-F-0415	C	Bulk Vitrification Instrument Loop Diagram 33-T-415	C4-16
B-145579-33-F-0416	C	Bulk Vitrification Instrument Loop Diagram 33-V-416	C4-17
B-145579-33-F-0417	C	Bulk Vitrification Instrument Loop Diagram 33-P-417	C4-18
B-145579-33-F-0418	C	Bulk Vitrification Instrument Loop Diagram 33-P-418	C4-19
B-145579-33-F-0419	D	Bulk Vitrification Instrument Loop Diagram 33-P-419	C4-20
B-145579-33-F-0420	C	Bulk Vitrification Instrument Loop Diagram 33-H-420	C4-21
B-145579-33-F-0422	C	Bulk Vitrification Instrument Loop Diagram 33-H-422	C4-22
B-145579-33-F-0423	C	Bulk Vitrification Instrument Loop Diagram 33-H-423	C4-23
B-145579-33-F-0424	D	Bulk Vitrification Instrument Loop Diagram 33-P-424	C4-24
B-145579-34-F-0009	E	Bulk Vitrification Instrument Loop Diagram 34-Y-009	C4-25
B-145579-34-F-0010	C	Bulk Vitrification Instrument Loop Diagram 34-Y-010	C4-26
B-145579-34-F-0019	E	Bulk Vitrification Instrument Loop Diagram 34-Y-019	C4-27
B-145579-34-F-0020	C	Bulk Vitrification Instrument Loop Diagram 34-Y-020	C4-28
B-145579-34-F-0101	C	Bulk Vitrification Instrument Loop Diagram 34-T-101	C4-29
B-145579-34-F-0102	C	Bulk Vitrification Instrument Loop Diagram 34-T-102	C4-30

Drawing/Sketch	Revision	Title	Page
B-145579-34-F-0103	C	Bulk Vitrification Instrument Loop Diagram 34-T-103	C4-31
B-145579-34-F-0104	C	Bulk Vitrification Instrument Loop Diagram 34-T-104	C4-32
B-145579-34-F-0112	C	Bulk Vitrification Instrument Loop Diagram 34-P-112	C4-33
B-145579-34-F-0113	D	Bulk Vitrification Instrument Loop Diagram 34-H-113	C4-34
B-145579-34-F-0114	C	Bulk Vitrification Instrument Loop Diagram 34-F-114	C4-35
B-145579-34-F-0115	C	Bulk Vitrification Instrument Loop Diagram 34-P-115	C4-36
B-145579-34-F-0201	C	Bulk Vitrification Instrument Loop Diagram 34-Y-201	C4-37
B-145579-34-F-0202	C	Bulk Vitrification Instrument Loop Diagram 34-Y-202	C4-38
B-145579-34-F-0203	C	Bulk Vitrification Instrument Loop Diagram 34-Y-203	C4-39
B-145579-34-F-0204	C	Bulk Vitrification Instrument Loop Diagram 34-Y-204	C4-40
B-145579-34-F-0205	C	Bulk Vitrification Instrument Loop Diagram 34-Y-205	C4-41
B-145579-34-F-0206	C	Bulk Vitrification Instrument Loop Diagram 34-Y-206	C4-42
DBVS-SK-M107, Sht 1	E	Bulk Vitrification Dried Waste Transfer System	C4-43
DBVS-SK-M107, Sht 2	C	Bulk Vitrification Dried Waste Transfer System Plan	C4-44
DBVS-SK-M107, Sht 3	C	Bulk Vitrification Dried Waste Transfer System Elevations	C4-45
F-145579-00-B-0001	K	Bulk Vitrification Structural Steel General Notes – Sh 1	C4-46
F-145579-00-B-0002	F	Bulk Vitrification Structural Steel General Notes – Sh 2	C4-47
F-145579-00-B-0003	J	Bulk Vitrification Structural Steel Typical Details – Sh 1	C4-48
F-145579-00-B-0004	G	Bulk Vitrification Structural Steel Typical Details – Sh 2	C4-49
F-145579-00-B-0005	I	Bulk Vitrification Melt Area Structural Stl Plans & Details	C4-50
F-145579-00-B-0006	G	Bulk Vitrification Melt Area Structural Stl Elevations & Details	C4-51
F-145579-00-B-0007	G	Bulk Vitrification Melt Area – Grating & Floor Plate Layout	C4-52
F-145579-00-B-0010	C	Bulk Vitrification Melt Area Structural Stl Stairs & Details	C4-53
F-145579-00-B-0013	A	Bulk Vitrification Melt Area Structural Stl Connection Details	C4-54
F-145579-00-D-0041	F	Bulk Vitrification Melt Area G.A. Sections	C4-55
F-145579-00-D-0051	F	Bulk Vitrification Melt Area G.A. Plan Views	C4-56
F-145579-00-E-0139, Sht 1	C	Bulk Vitrification Waste Feed Vacuum Blower Schematic Diagram	C4-57
F-145579-00-E-0139, Sht 2	C	Bulk Vitrification Waste Feed Vacuum Blower Wiring Diagram	C4-58
F-145579-00-E-0174, Sht 1	C	Bulk Vitrification Waste Receiver Airlock Schematic Diagram	C4-59

Drawing or Sketch	Revision	Title	Page
F-145579-00-E-0174, Sht 2	C	Bulk Vitrification Waste Receiver Airlock Wiring Diagram	C4-60
F-145579-00-E-0175, Sht 1	C	Bulk Vitrification Dry Wst Rec 1 Rot Airlock Schematic Diagram	C4-61
F-145579-00-E-0175, Sht 2	C	Bulk Vitrification Dry Wst Rec 1 Rot Airlock Wiring Diagram	C4-62
F-145579-00-E-0176, Sht 1	C	Bulk Vitrification Dry Wst Rec 2 Rot Airlock Schematic Diagram	C4-63
F-145579-00-E-0176, Sht 2	C	Bulk Vitrification Dry Wst Rec 2 Rot Airlock Wiring Diagram	C4-64
F-145579-34-D-0010	C	Bulk Vitrification Area 34 ~ Waste Transfer Holes in Floor Plates	C4-65
H-14-106792*	1	Bulk Vitrification Melt Area Fdn Plans & Sections	N/A
H-14-106799	0	Bulk Vitrification Minor Foundations Plans & Details	C4-66

*Foundation drawing reviewed by IQRPE with foundation calculations. Drawing not included in this Design Review Package.

This page intentionally left blank.

DWG NO	?	SH	OF	REV

In making requests for transmittal of data by any electronic media, the Company receiving such data agrees that AMEC Americas Limited cannot be held responsible for users of the data outside of or beyond the scope of our original agreement. Also, because data stored in electronic media or transmitted by electronic means can deteriorate undetected or be modified without the consultant's knowledge, the Company receiving data agrees that AMEC Americas Limited cannot be held liable for the compatibility, completeness or correctness of the data.

SERVICE: DRY WASTE RECEIVER TK

FIELD | MCS TERMINATION | MCS HMI

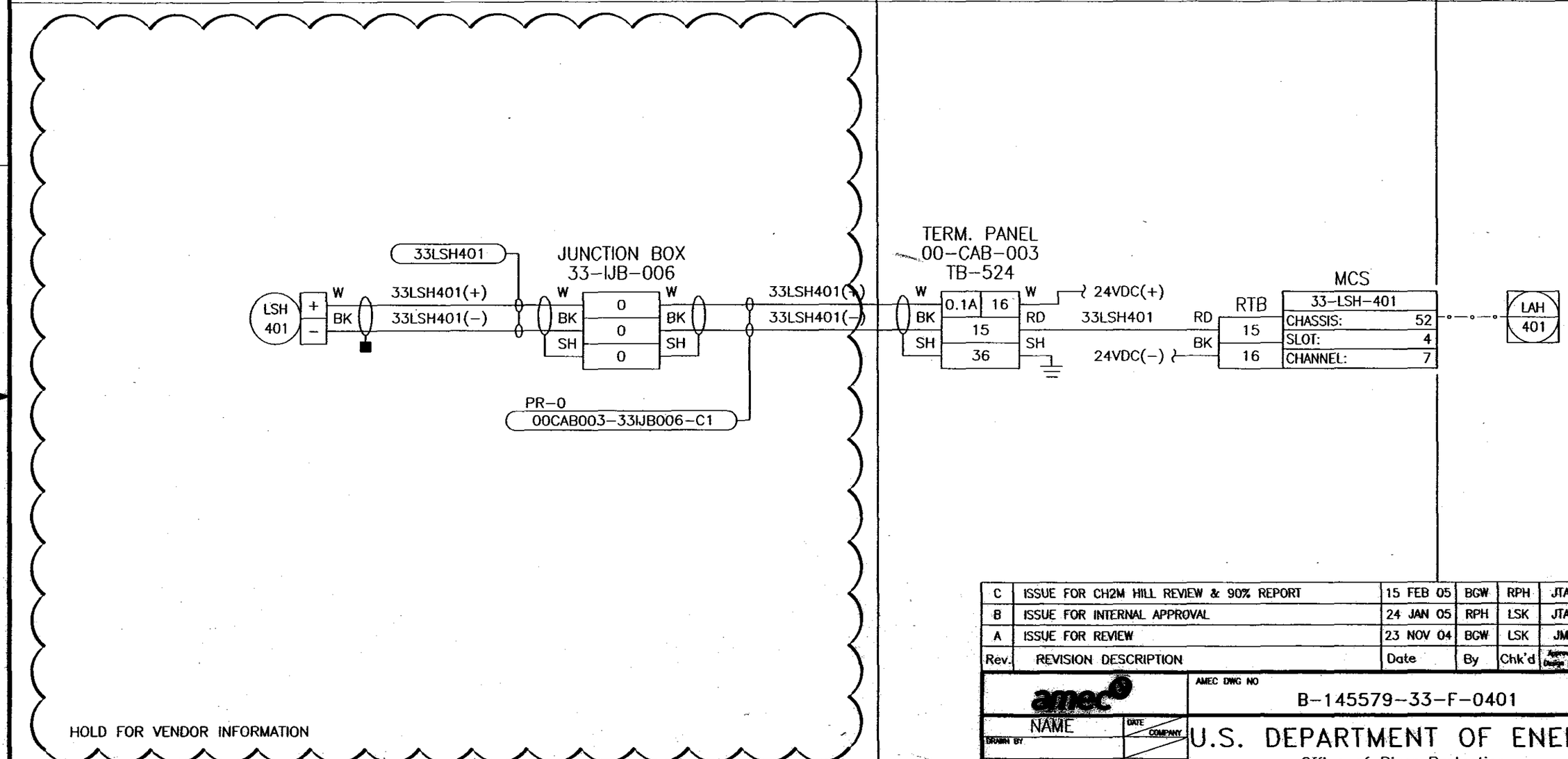

Rev.	REVISION DESCRIPTION	Date	By	Chk'd	Approved Design Lead	Approved Proj. Mgr
C	ISSUE FOR CH2M HILL REVIEW & 90% REPORT	15 FEB 05	BGW	RPH	JTA	TH
B	ISSUE FOR INTERNAL APPROVAL	24 JAN 05	RPH	LSK	JTA	TH
A	ISSUE FOR REVIEW	23 NOV 04	BGW	LSK	JM	TH

amec

AMEC DWG NO B-145579-33-F-0401 REV C

NAME	DATE	COMPANY
DRAWN BY		
DESIGN AUTH		

U.S. DEPARTMENT OF ENERGY
Office of River Protection

TITLE
BULK VITRIFICATION
INSTRUMENT LOOP DIAGRAM
33-L-401

SIZE	BLDG NO	INDEX NO	DWG NO	REV
B				

SCALE N/A | EDT | SHEET 1 OF 1

DOE_TB_B.DWG (01-01)

REF NUMBER	TITLE
F-145579-33-A-0106	PROCESS & INSTRUMENT DIAG.

REFERENCES

NEXT USED ON

MFD REV REL	REV NO	DESCRIPTION	REV BY DATE	REV BY	CHK'D BY	ENGR COMPANY

REVISIONS

SERVICE: DRY WASTE RECEIVER AIR FILTER

In making requests for transmittal of data by any electronic media, the Company receiving such data agrees that AMEC Americas Limited cannot be held responsible for errors of the data outside of or beyond the scope of our original agreement. Also, because data stored in electronic media or transmitted by electronic means can deteriorate undetected or be modified without the consultant's knowledge, the Company receiving data agrees that AMEC Americas Limited cannot be held liable for the compatibility, completeness or correctness of the data.

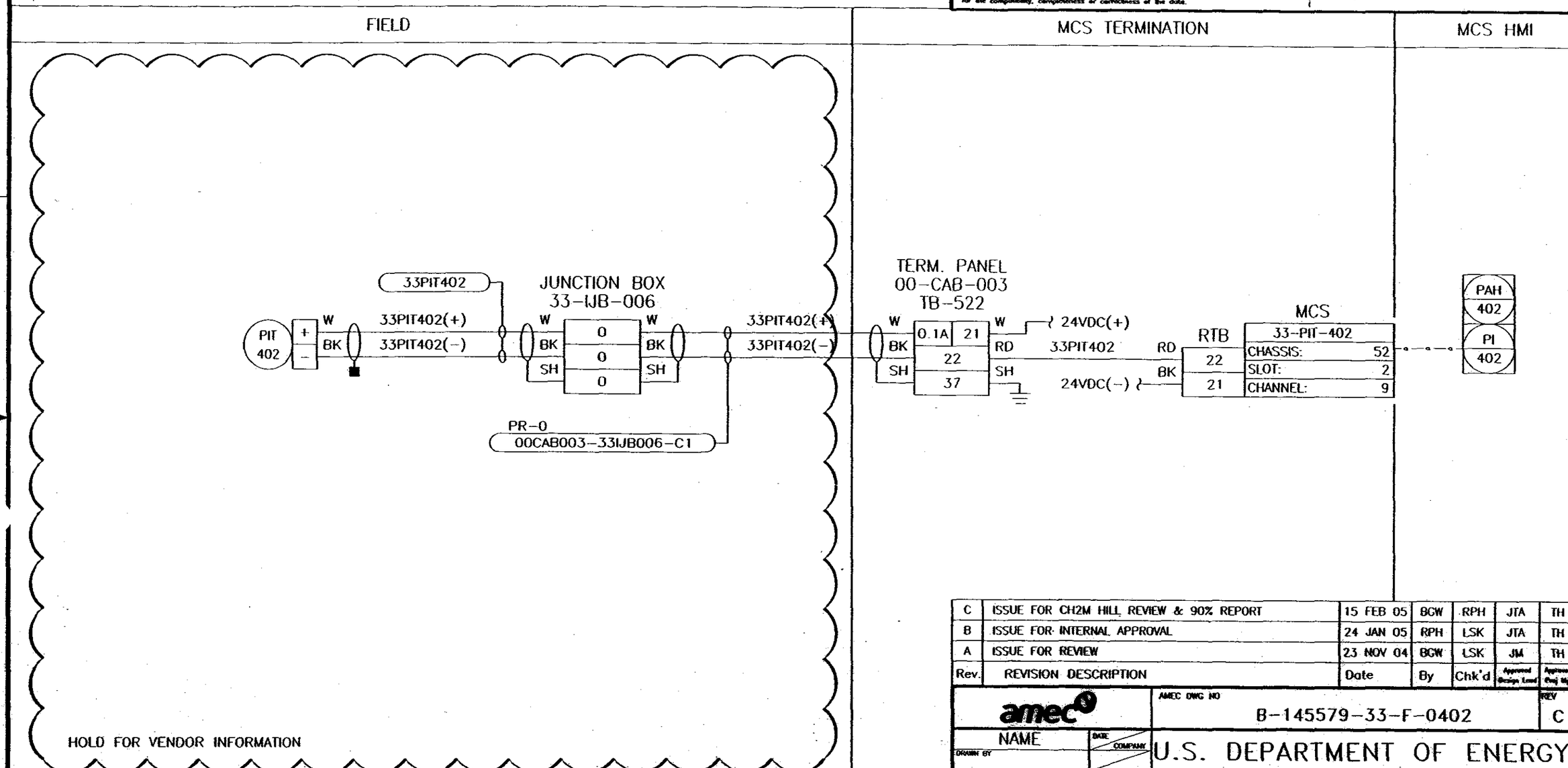

Rev.	REVISION DESCRIPTION	Date	By	Chk'd	Approved Design Lead	Approved Proj Mgr
C	ISSUE FOR CH2M HILL REVIEW & 90% REPORT	15 FEB 05	BGW	RPH	JTA	TH
B	ISSUE FOR INTERNAL APPROVAL	24 JAN 05	RPH	LSK	JTA	TH
A	ISSUE FOR REVIEW	23 NOV 04	BGW	LSK	JM	TH

amec

AMEC DWG NO: B-145579-33-F-0402 REV C

NAME / DATE / COMPANY

DRAWN BY

DESIGN AUTH

U.S. DEPARTMENT OF ENERGY
Office of River Protection

TITLE
BULK VITRIFICATION
INSTRUMENT LOOP DIAGRAM
33-P-402

SIZE B | BLDG NO | INDEX NO | DWG NO | REV

SCALE N/A | EDT | SHEET 1 OF 1

DOE_TB_B.DWG (01-01)

REF NUMBER	TITLE
F-145579-33-A-0106	PROCESS & INSTRUMENT DIAG.

REFERENCES

NEXT USED ON

REV REL	REV NO	DESCRIPTION	REV BY DATE	REV BY	CHK'D BY	ENGR	COMPANY

REVISIONS

4 3 2 1

SERVICE: DRY WASTE RECEIVER GATE

In making requests for transmittal of data by any electronic media, the Company receiving such data agrees that AMEC Americas Limited cannot be held responsible for uses of the data outside of or beyond the scope of our original agreement. Also, because data stored in electronic media or transmitted by electronic means can deteriorate undetected or be modified without the consultant's knowledge, the Company receiving data agrees that AMEC Americas Limited cannot be held liable for the compatibility, completeness or correctness of the data.

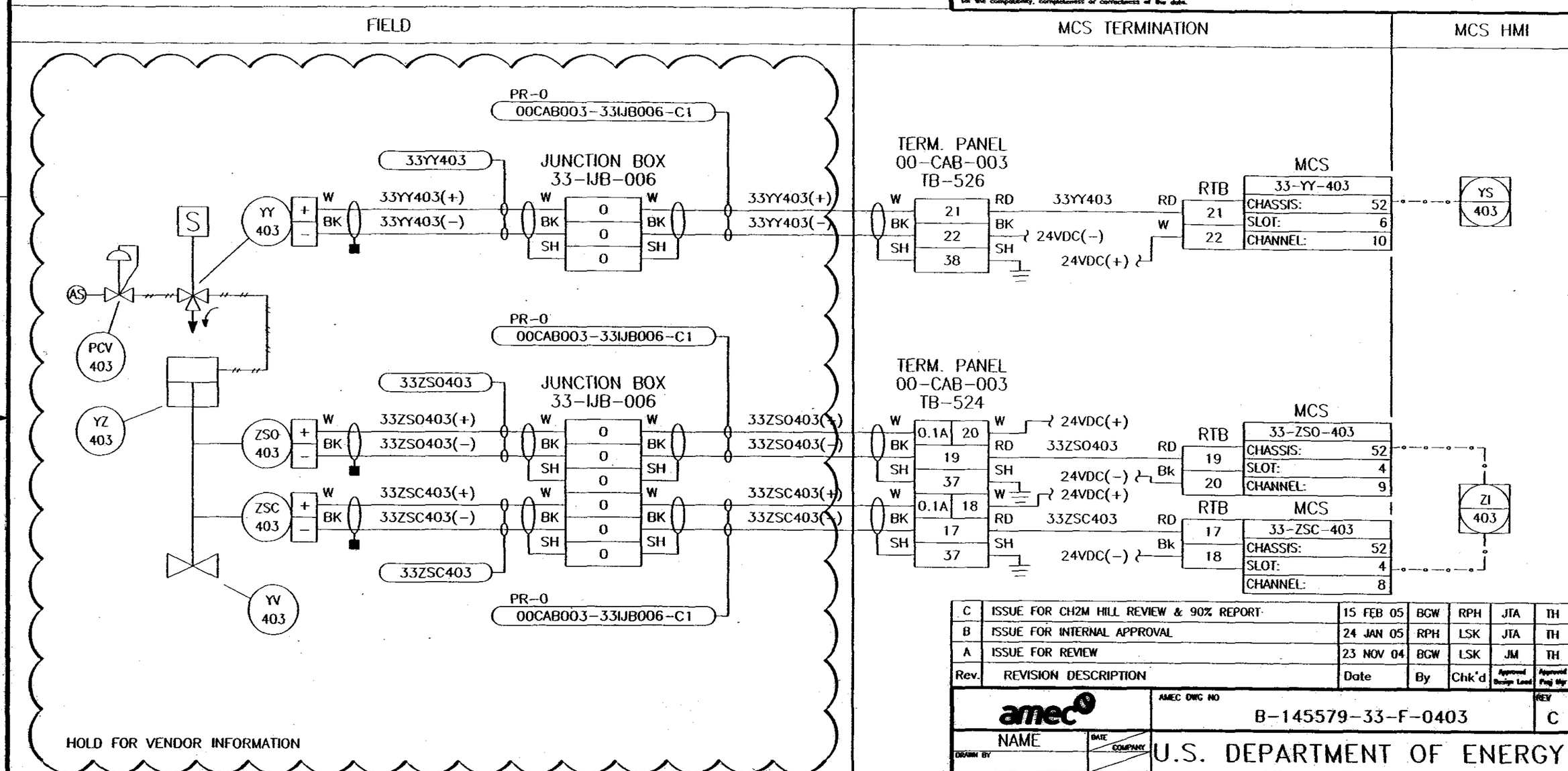

Rev.	REVISION DESCRIPTION	Date	By	Chk'd	Approved Design Lead	Approved Proj Mgr
C	ISSUE FOR CH2M HILL REVIEW & 90% REPORT	15 FEB 05	BGW	RPH	JTA	TH
B	ISSUE FOR INTERNAL APPROVAL	24 JAN 05	RPH	LSK	JTA	TH
A	ISSUE FOR REVIEW	23 NOV 04	BGW	LSK	JM	TH

amec

AMEC DWG NO B-145579-33-F-0403 REV C

NAME / DATE / COMPANY

DRAWN BY

DESIGN AUTH

U.S. DEPARTMENT OF ENERGY
Office of River Protection

TITLE
BULK VITRIFICATION
INSTRUMENT LOOP DIAGRAM
33-Y-403

SIZE B | BLDG NO | INDEX NO | DWG NO | REV

SCALE N/A | EDT | SHEET 1 OF 1

DOE_TB_B.DWG (01-01)

REF NUMBER	TITLE
F-145579-33-A-0106	PROCESS & INSTRUMENT DIAG.

REFERENCES

NEXT USED ON

REV REL	MFD	REV NO	DESCRIPTION	REV BY DATE	REV BY	CHK'D BY	ENGR	COMPANY

REVISIONS

4 3 2 1

RPP-24544 REV 1b

SERVICE: DRY WASTE TRANSFER CONVEYING AIR

In making requests for transmittal of data by any electronic media, the Company receiving such data agrees that AMEC Americas Limited cannot be held responsible for users of the data outside of or beyond the scope of our original agreement. Also, because data stored in electronic media or transmitted by electronic means can deteriorate undetected or be modified without the consultant's knowledge, the Company receiving data agrees that AMEC Americas Limited cannot be held liable for the compatibility, completeness or correctness of the data.

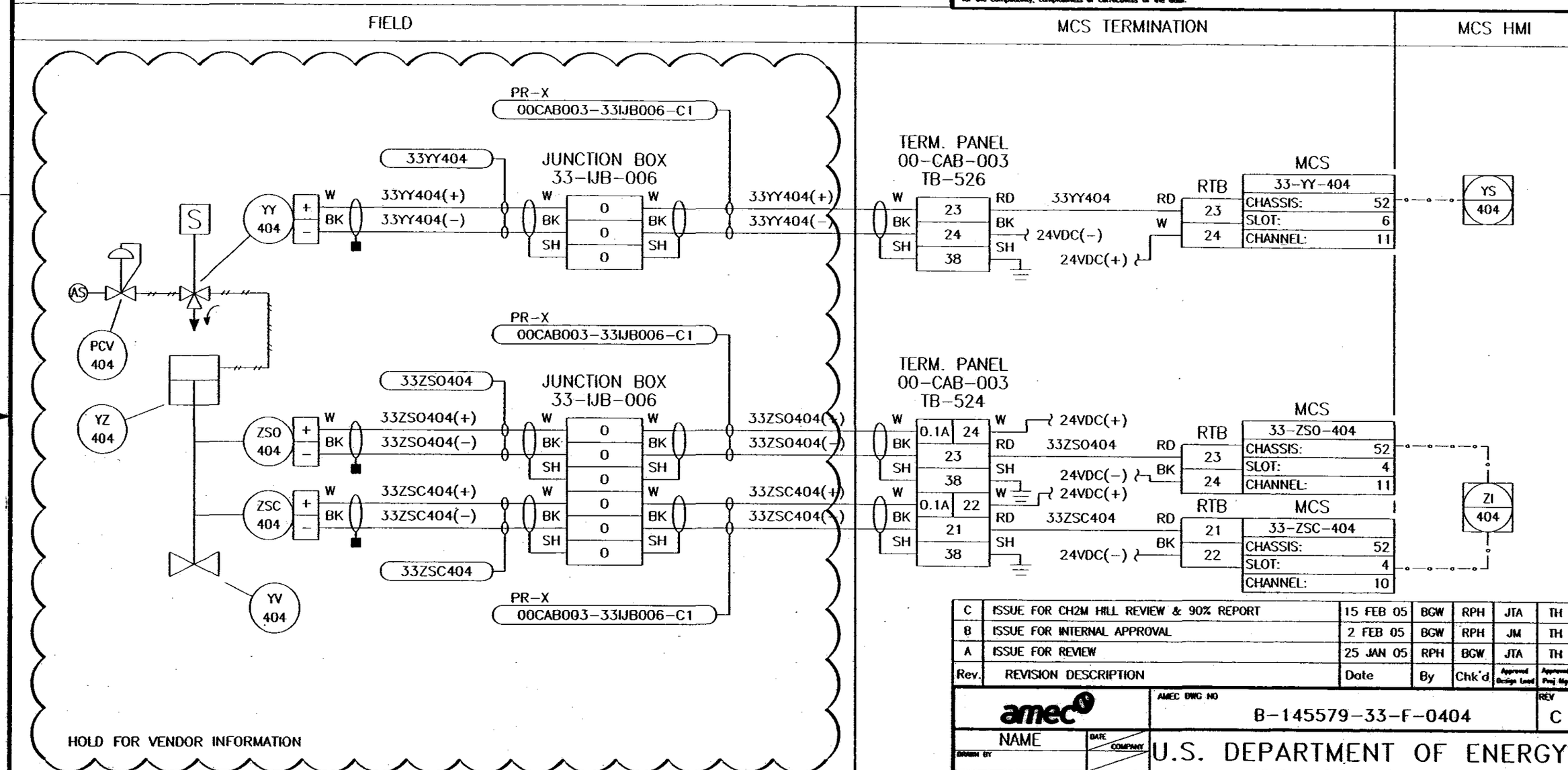

Rev.	REVISION DESCRIPTION	Date	By	Chk'd	Approved Design Lead	Approved Proj Mgr
C	ISSUE FOR CH2M HILL REVIEW & 90% REPORT	15 FEB 05	BGW	RPH	JTA	TH
B	ISSUE FOR INTERNAL APPROVAL	2 FEB 05	BGW	RPH	JM	TH
A	ISSUE FOR REVIEW	25 JAN 05	RPH	BGW	JTA	TH

amec

AMEC DWG NO B-145579-33-F-0404 REV C

NAME / DATE / COMPANY — DRAWN BY — DESIGN AUTH

U.S. DEPARTMENT OF ENERGY
Office of River Protection

TITLE
BULK VITRIFICATION
INSTRUMENT LOOP DIAGRAM
33-Y-404

SIZE B | BLDG NO | INDEX NO | DWG NO | REV

SCALE N/A | EDT | SHEET 1 OF 1

DOE_TB_B.DWG (01-01)

REF NUMBER	TITLE
F-145579-33-A-0106	PROCESS & INSTRUMENT DIAG.

REFERENCES — NEXT USED ON

MFD	REV NO	DESCRIPTION	REV BY DATE	REV BY	CHK'D BY	ENGR	COMPANY

REVISIONS

SERVICE: DRY WASTE RECEIVER #1

In making requests for transmittal of data by any electronic media, the Company receiving such data agrees that AMEC Americas Limited cannot be held responsible for errors of the data outside of or beyond the scope of our original agreement. Also, because data stored in electronic media or transmitted by electronic means can deteriorate undetected or be modified without the consultant's knowledge, the Company receiving data agrees that AMEC Americas Limited cannot be held liable for the compatibility, completeness or correctness of the data.

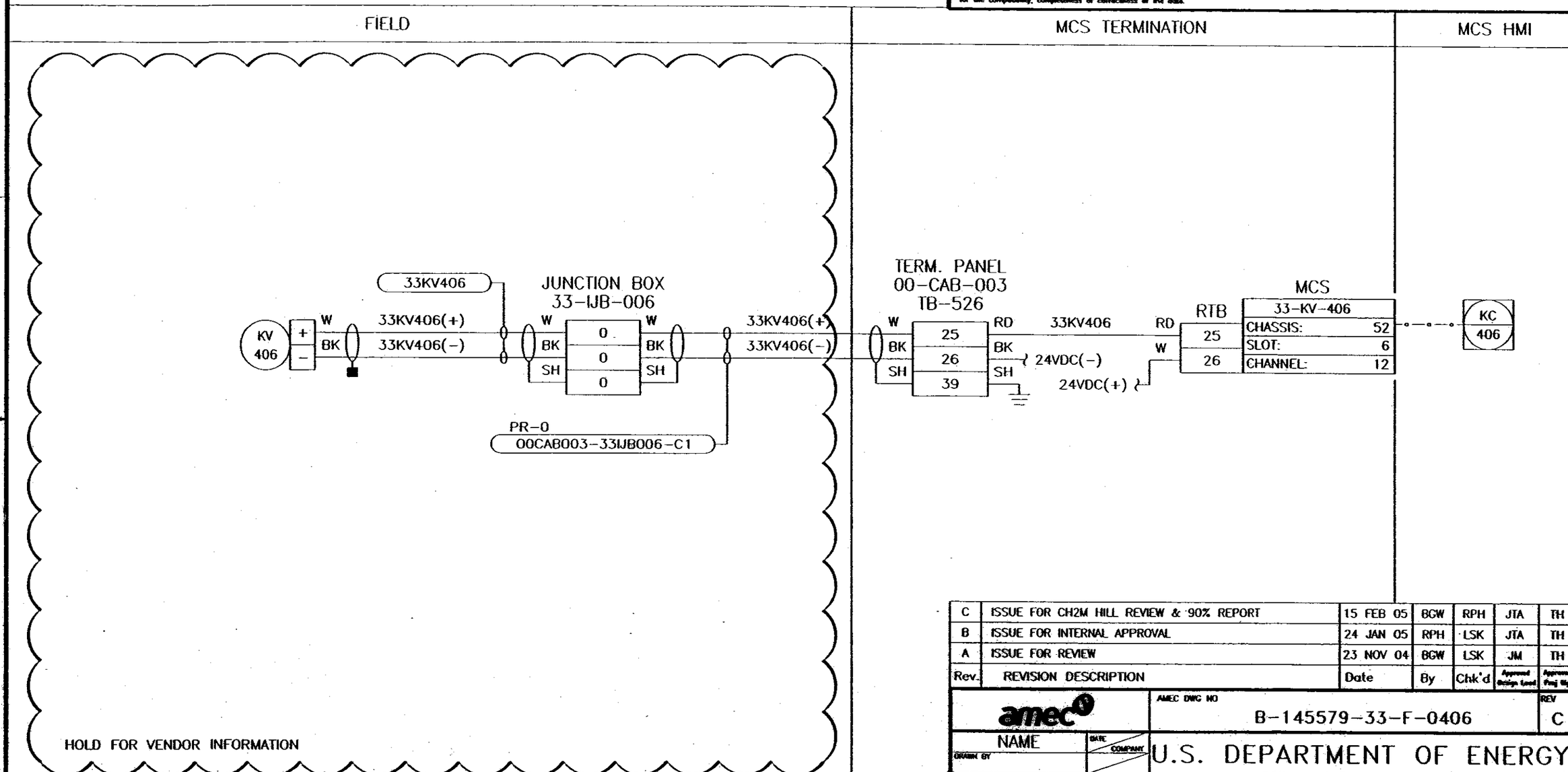

Rev.	REVISION DESCRIPTION	Date	By	Chk'd	Approved Design Level	Approved Proj Mgr
C	ISSUE FOR CH2M HILL REVIEW & 90% REPORT	15 FEB 05	BGW	RPH	JTA	TH
B	ISSUE FOR INTERNAL APPROVAL	24 JAN 05	RPH	LSK	JTA	TH
A	ISSUE FOR REVIEW	23 NOV 04	BGW	LSK	JM	TH

amec

AMEC DWG NO: B-145579-33-F-0406

REV: C

NAME	DATE	COMPANY
DRAWN BY		
DESIGN AUTH		

U.S. DEPARTMENT OF ENERGY
Office of River Protection

TITLE: BULK VITRIFICATION INSTRUMENT LOOP DIAGRAM 33-K-406

SIZE: B | BLDG NO | INDEX NO | DWG NO | REV

SCALE: N/A | EDT | SHEET 1 OF 1

DOE_TB_B.DWG (01-01)

REF NUMBER	TITLE
F-145579-33-A-0106	PROCESS & INSTRUMENT DIAG.

REFERENCES

NEXT USED ON

MFD. REV REL	REV NO	DESCRIPTION	REV BY DATE	REV BY	CHK'D BY	ENGR COMPANY

REVISIONS

4 3 2 1

SERVICE: DRY WASTE RECEIVER #1 VENT

In making requests for transmittal of data by any electronic media, the Company receiving such data agrees that AMEC Americas Limited cannot be held responsible for users of the data outside of or beyond the scope of our original agreement. Also, because data stored in electronic media or transmitted by electronic means can deteriorate undetected or be modified without the consultant's knowledge, the Company receiving data agrees that AMEC Americas Limited cannot be held liable for the compatibility, completeness or correctness of the data.

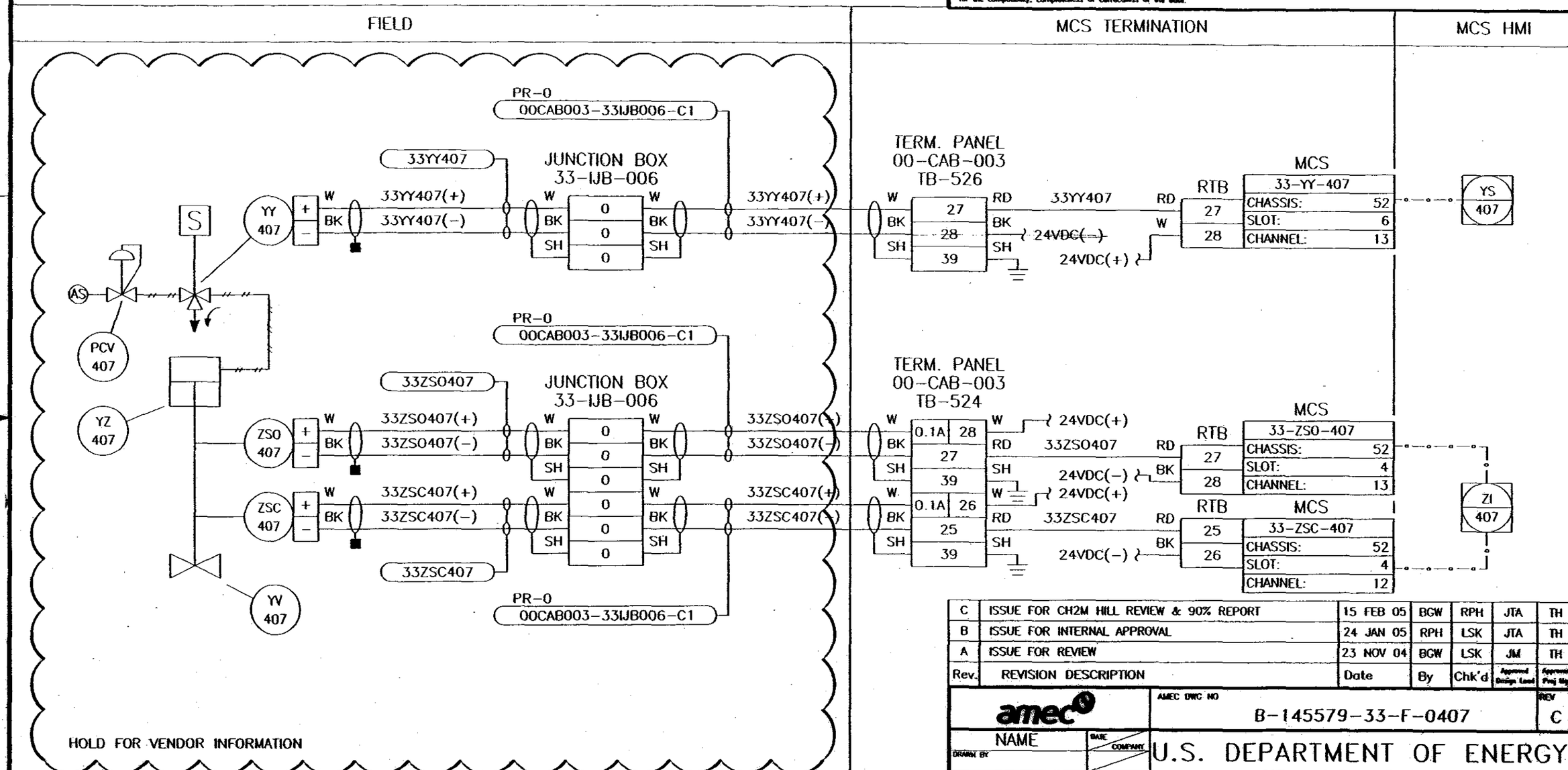

Rev.	REVISION DESCRIPTION	Date	By	Chk'd	Approved Design Lead	Approved Proj Mgr
C	ISSUE FOR CH2M HILL REVIEW & 90% REPORT	15 FEB 05	BGW	RPH	JTA	TH
B	ISSUE FOR INTERNAL APPROVAL	24 JAN 05	RPH	LSK	JTA	TH
A	ISSUE FOR REVIEW	23 NOV 04	BGW	LSK	JM	TH

amec

AMEC DWG NO B-145579-33-F-0407 REV C

NAME / DATE / COMPANY

DRAWN BY

DESIGN AUTH

U.S. DEPARTMENT OF ENERGY
Office of River Protection

TITLE
BULK VITRIFICATION
INSTRUMENT LOOP DIAGRAM
33-Y-407

SIZE B | BLDG NO | INDEX NO | DWG NO | REV

SCALE N/A | EDT | SHEET 1 OF 1

DOE_TB_B.DWG (01-01)

REF NUMBER	TITLE
F-145579-33-A-0106	PROCESS & INSTRUMENT DIAG.

REFERENCES

NEXT USED ON

REV REL	REV NO	DESCRIPTION	REV BY DATE	REV BY	CHK'D BY	ENGR	COMPANY

REVISIONS

4 3 2 1

SERVICE: DRY WASTE SILO NO.2

In making requests for transmittal of data by any electronic media, the Company receiving such data agrees that AMEC Americas Limited cannot be held responsible for users of the data outside of or beyond the scope of our original agreement. Also, because data stored in electronic media or transmitted by electronic means can deteriorate undetected or be modified without the consultant's knowledge, the Company receiving data agrees that AMEC Americas Limited cannot be held liable for the compatibility, completeness or correctness of the data.

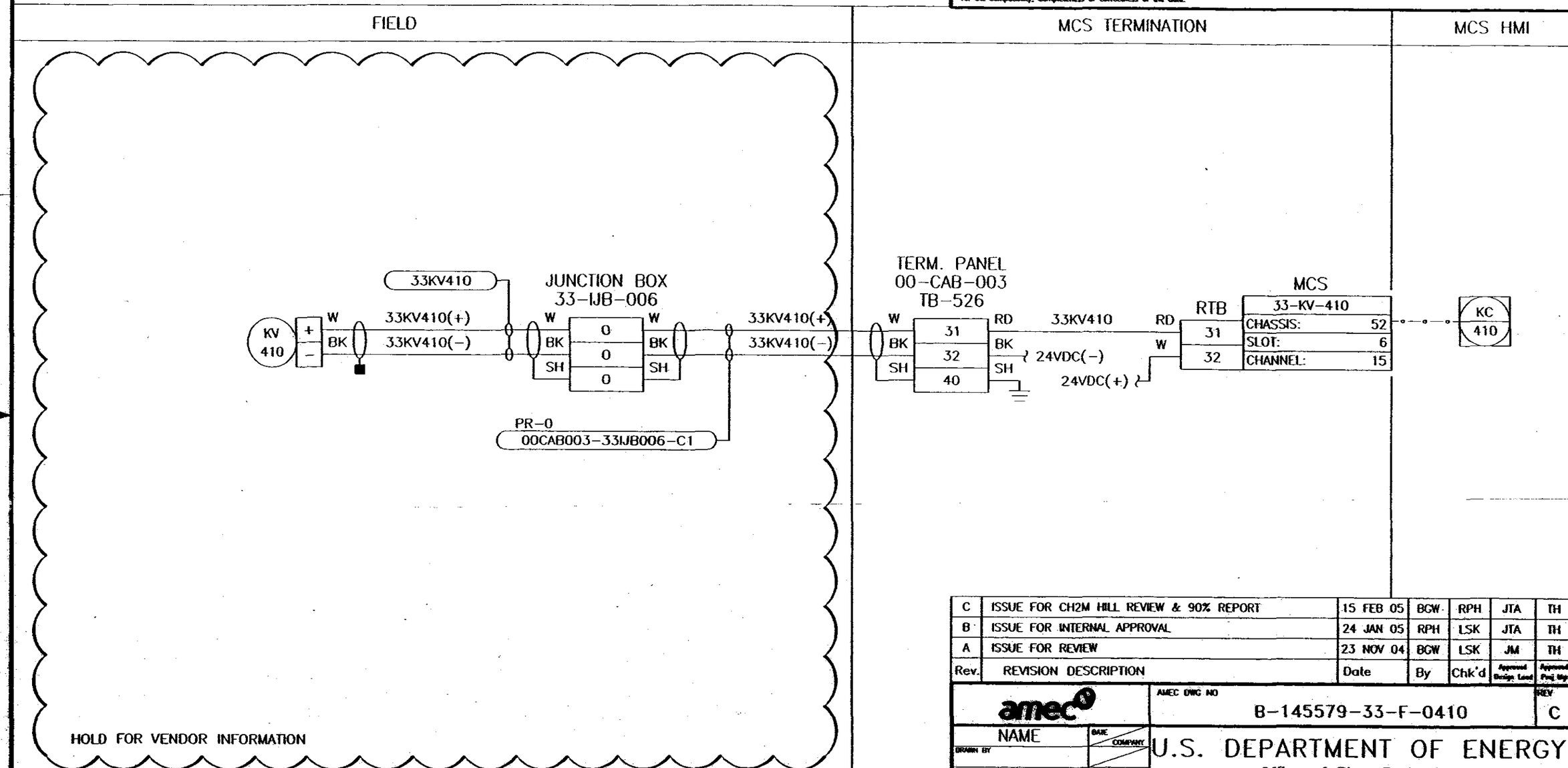

Rev.	REVISION DESCRIPTION	Date	By	Chk'd	Approved Design Lead	Approved Proj Mgr
C	ISSUE FOR CH2M HILL REVIEW & 90% REPORT	15 FEB 05	BGW	RPH	JTA	TH
B	ISSUE FOR INTERNAL APPROVAL	24 JAN 05	RPH	LSK	JTA	TH
A	ISSUE FOR REVIEW	23 NOV 04	BGW	LSK	JM	TH

amec

AMEC DWG NO: B-145579-33-F-0410 REV: C

NAME / DATE / COMPANY

DRAWN BY

DESIGN AUTH

U.S. DEPARTMENT OF ENERGY
Office of River Protection

TITLE: BULK VITRIFICATION INSTRUMENT LOOP DIAGRAM 33-K-410

SIZE: B | BLDG NO | INDEX NO | DWG NO | REV

SCALE: N/A | EDT | SHEET 1 OF 1

DOE_TB_B.DWG (01-01)

REF NUMBER	TITLE
F-145579-33-A-0106	PROCESS & INSTRUMENT DIAG.

REFERENCES

NEXT USED ON

REV REL	REV NO	DESCRIPTION	REV BY DATE	REV BY	CHK'D BY	ENGR / COMPANY

REVISIONS

RPP-24544 REV 1b

SERVICE: DRY WASTE RECEIVER #2 VENT

In making requests for transmittal of data by any electronic media, the Company receiving such data agrees that AMEC Americas Limited cannot be held responsible for users of the data outside of or beyond the scope of our original agreement. Also, because data stored in electronic media or transmitted by electronic means can deteriorate undetected or be modified without the consultant's knowledge, the Company receiving data agrees that AMEC Americas Limited cannot be held liable for the compatibility, completeness or correctness of the data.

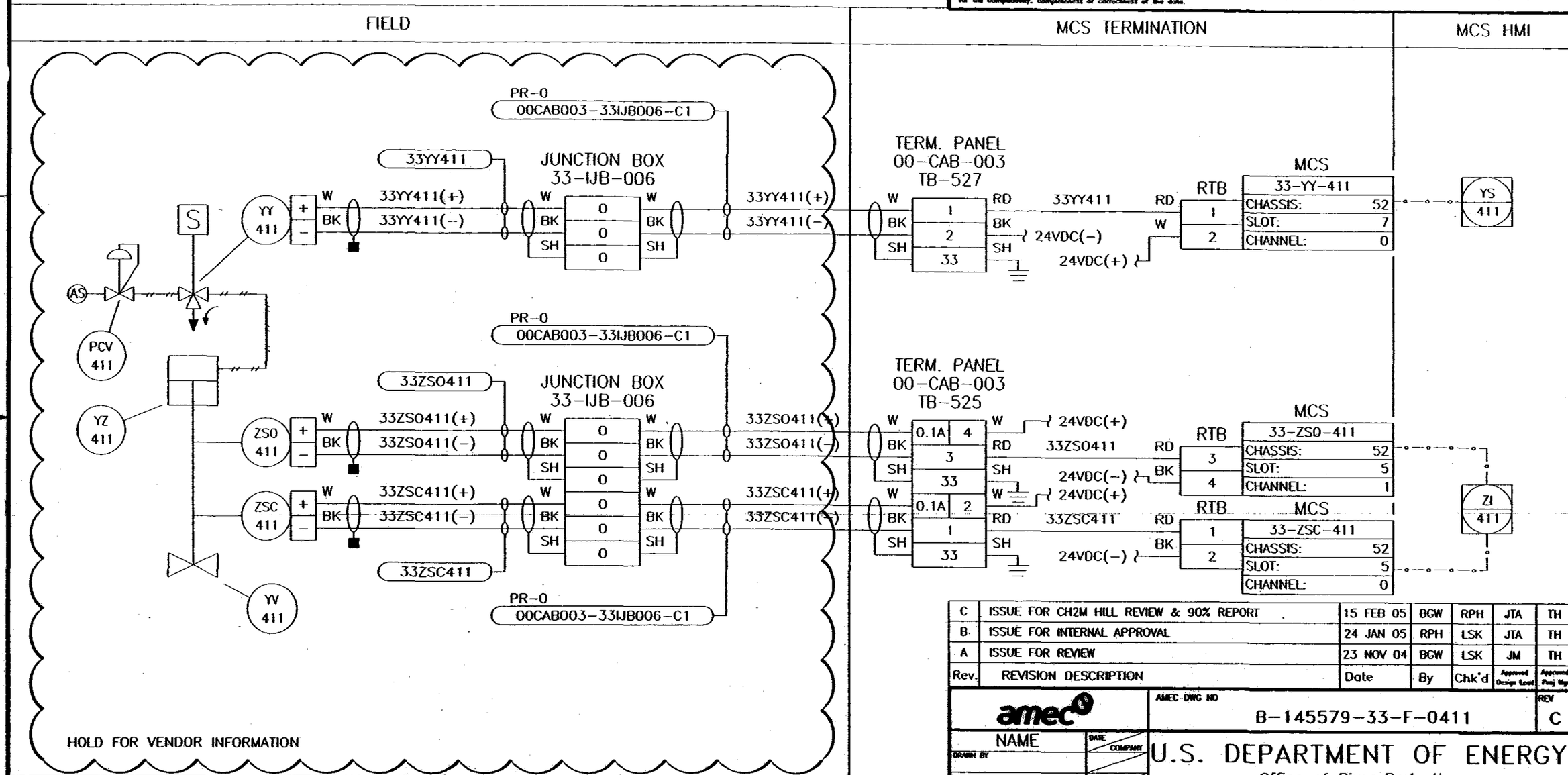

Rev.	REVISION DESCRIPTION	Date	By	Chk'd	Approved Design Lead	Approved Proj Mgr
C	ISSUE FOR CH2M HILL REVIEW & 90% REPORT	15 FEB 05	BGW	RPH	JTA	TH
B	ISSUE FOR INTERNAL APPROVAL	24 JAN 05	RPH	LSK	JTA	TH
A	ISSUE FOR REVIEW	23 NOV 04	BGW	LSK	JM	TH

amec

AMEC DWG NO: B-145579-33-F-0411 REV: C

NAME	DATE	COMPANY
DRAWN BY		
DESIGN AUTH		

U.S. DEPARTMENT OF ENERGY
Office of River Protection

TITLE: BULK VITRIFICATION INSTRUMENT LOOP DIAGRAM 33-Y-411

SIZE: B | BLDG NO | INDEX NO | DWG NO | REV

SCALE: N/A | EDT | SHEET 1 OF 1

REF NUMBER	TITLE
F-145579-33-A-0106	PROCESS & INSTRUMENT DIAG.

REFERENCES

NEXT USED ON

MFD REV REL	REV NO	DESCRIPTION	REV BY DATE	REV BY	CHK'D BY	ENGR COMPANY

REVISIONS

4 3 2 1

OOE_TB_B.DWG (01-01)

RPP-24544 REV 1b

SERVICE: WASTE FEED VAC PUMP INLET

In making requests for transmittal of data by any electronic media, the Company receiving such data agrees that AMEC Americas Limited cannot be held responsible for users of the data outside of or beyond the scope of our original agreement. Also, because data stored in electronic media or transmitted by electronic means can deteriorate undetected or be modified without the consultant's knowledge, the Company receiving data agrees that AMEC Americas Limited cannot be held liable for the compatibility, completeness or correctness of the data.

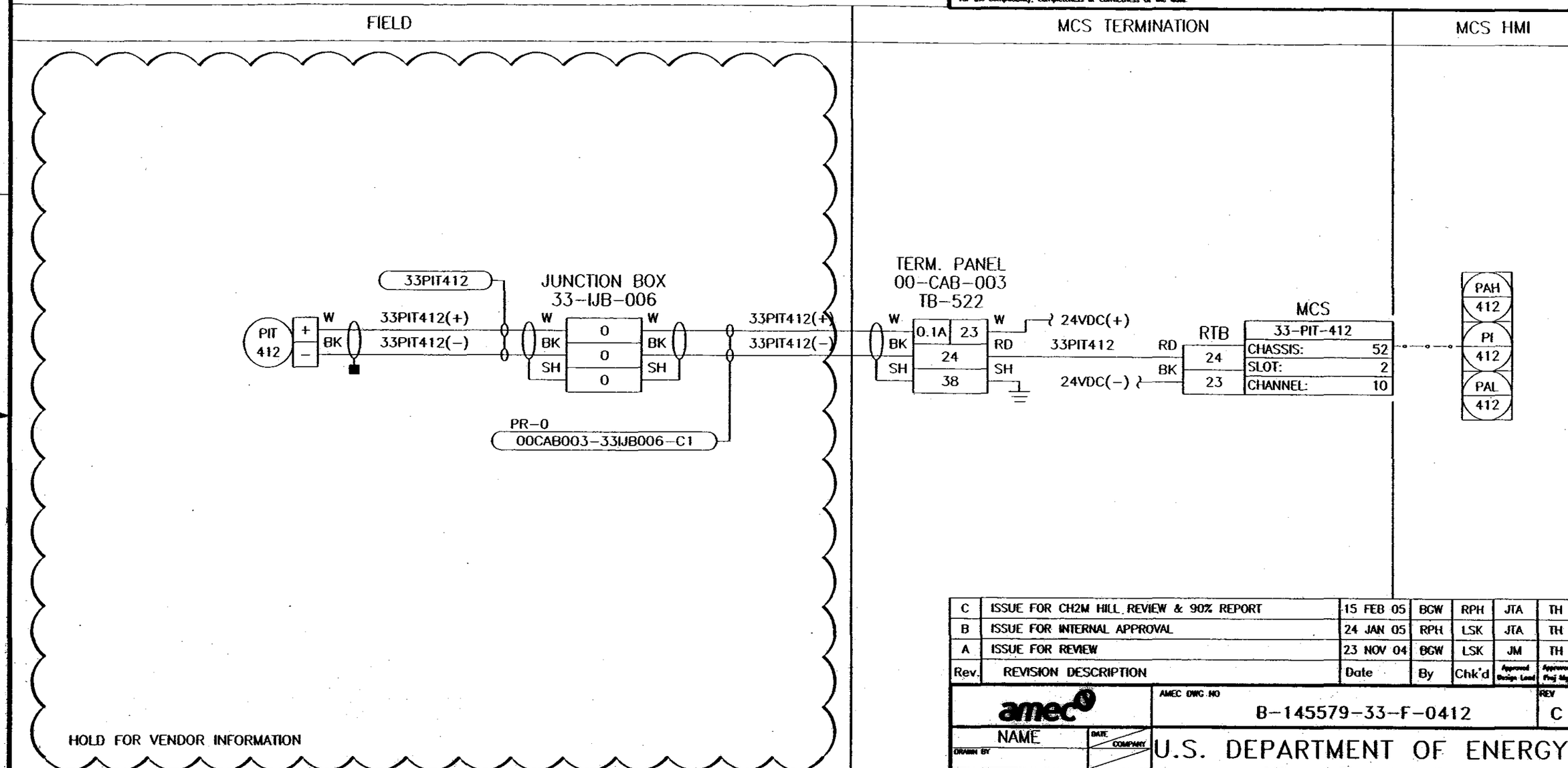

Rev.	REVISION DESCRIPTION	Date	By	Chk'd	Approved Design Lead	Approved Proj Mgr
C	ISSUE FOR CH2M HILL REVIEW & 90% REPORT	15 FEB 05	BGW	RPH	JTA	TH
B	ISSUE FOR INTERNAL APPROVAL	24 JAN 05	RPH	LSK	JTA	TH
A	ISSUE FOR REVIEW	23 NOV 04	BGW	LSK	JM	TH

amec

AMEC DWG NO: B-145579-33-F-0412 REV: C

NAME	DATE / COMPANY
DRAWN BY	
DESIGN AUTH	

U.S. DEPARTMENT OF ENERGY
Office of River Protection

TITLE: BULK VITRIFICATION INSTRUMENT LOOP DIAGRAM 33-P-412

SIZE: B | BLDG NO | INDEX NO | DWG NO | REV

SCALE: N/A | EDT | SHEET 1 OF 1

DOE_TB_B.DWG (01-01)

REF NUMBER	TITLE
F-145579-33-A-0106	PROCESS & INSTRUMENT DIAG.

REFERENCES

NEXT USED ON

REV NO	DESCRIPTION	REV BY DATE	REV BY	CHK'D BY	ENGR / COMPANY

MFD / REV REL

REVISIONS

4 3 2 1

DWG NO	?	SH	OF	REV

SERVICE: WASTE FEED VAC PUMP VALVE

In making requests for transmittal of data by any electronic media, the Company receiving such data agrees that AMEC Americas Limited cannot be held responsible for users of the data outside of or beyond the scope of our original agreement. Also, because data stored in electronic media or transmitted by electronic means can deteriorate undetected or be modified without the consultant's knowledge, the Company receiving data agrees that AMEC Americas Limited cannot be held liable for the compatibility, completeness or correctness of the data.

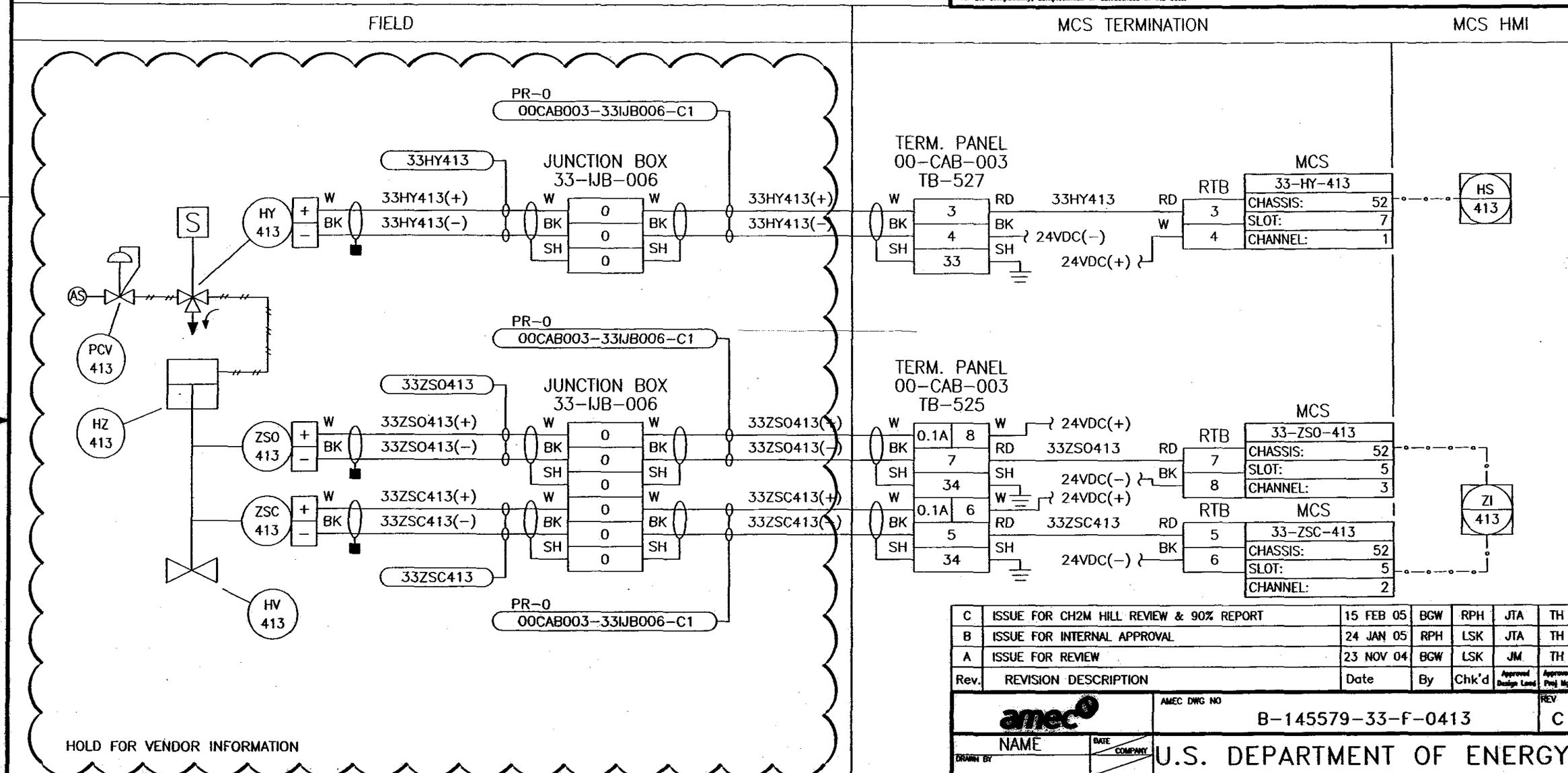

Rev.	REVISION DESCRIPTION	Date	By	Chk'd	Approved Design Lead	Approved Proj Mgr
C	ISSUE FOR CH2M HILL REVIEW & 90% REPORT	15 FEB 05	BGW	RPH	JTA	TH
B	ISSUE FOR INTERNAL APPROVAL	24 JAN 05	RPH	LSK	JTA	TH
A	ISSUE FOR REVIEW	23 NOV 04	BGW	LSK	JM	TH

amec

AMEC DWG NO B-145579-33-F-0413 REV C

NAME	DATE	COMPANY
DRAWN BY		
DESIGN AUTH		

U.S. DEPARTMENT OF ENERGY
Office of River Protection

TITLE
BULK VITRIFICATION
INSTRUMENT LOOP DIAGRAM
33-H-413

SIZE	BLDG NO	INDEX NO	DWG NO	REV
B				

SCALE N/A | EDT | SHEET 1 OF 1

REF NUMBER	TITLE
F-145579-33-A-0106	PROCESS & INSTRUMENT DIAG.

REFERENCES

NEXT USED ON

MFD	REV NO	DESCRIPTION	REV BY DATE	REV BY	CHK'D BY	ENGR	COMPANY

REVISIONS

DOE_TB_B.DWG (01-01)

DWG NO	?	SH	OF	REV

SERVICE: WASTE FEED VAC PUMP BYPASS

In making requests for transmittal of data by any electronic media, the Company receiving such data agrees that AMEC Americas Limited cannot be held responsible for users of the data outside of or beyond the scope of our original agreement. Also, because data stored in electronic media or transmitted by electronic means can deteriorate undetected or be modified without the consultant's knowledge, the Company receiving data agrees that AMEC Americas Limited cannot be held liable for the compatibility, completeness or correctness of the data.

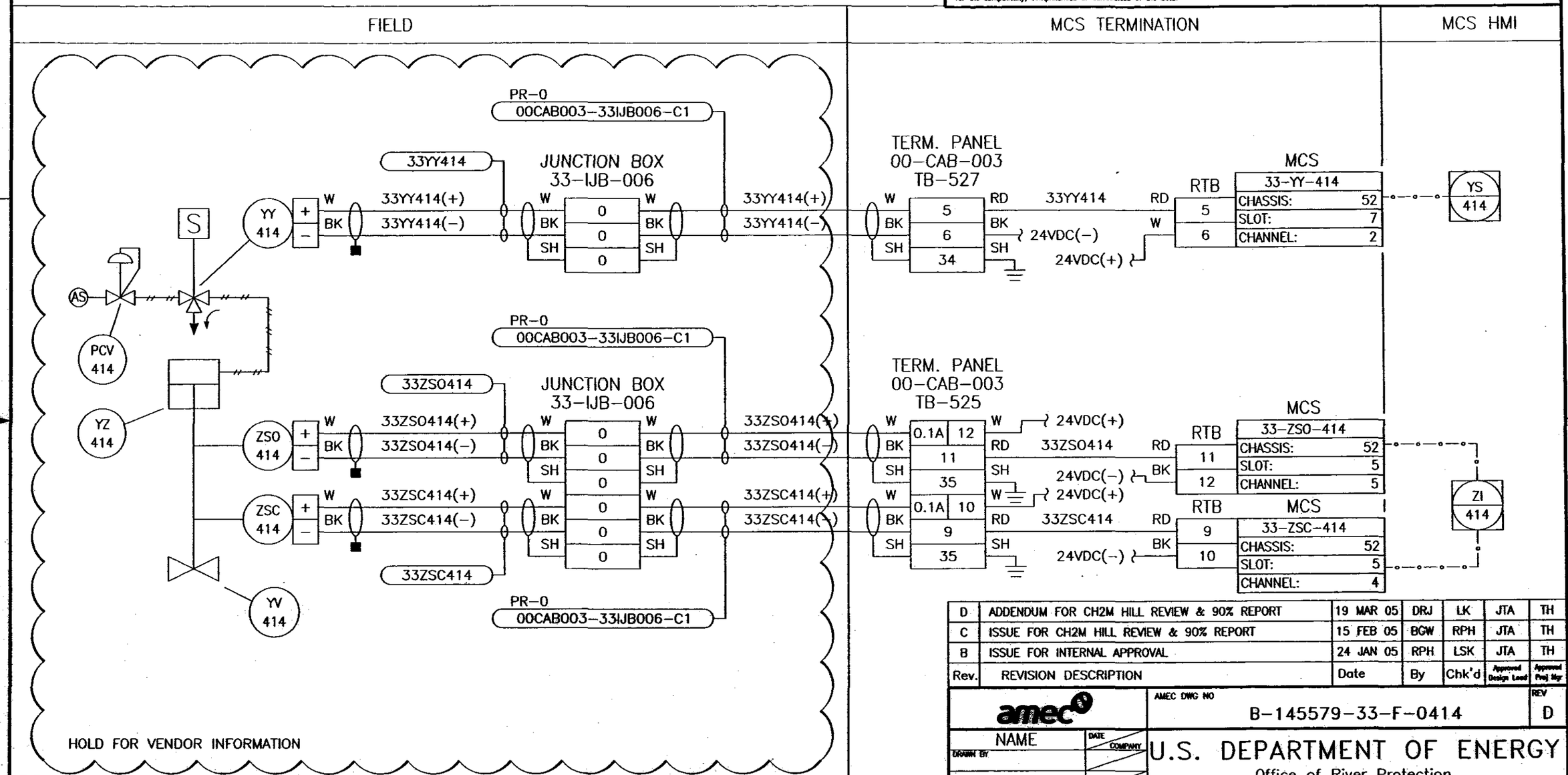

Rev.	REVISION DESCRIPTION	Date	By	Chk'd	Approved Design Lead	Approved Proj. Mgr
D	ADDENDUM FOR CH2M HILL REVIEW & 90% REPORT	19 MAR 05	DRJ	LK	JTA	TH
C	ISSUE FOR CH2M HILL REVIEW & 90% REPORT	15 FEB 05	BGW	RPH	JTA	TH
B	ISSUE FOR INTERNAL APPROVAL	24 JAN 05	RPH	LSK	JTA	TH

amec

AMEC DWG NO B-145579-33-F-0414 REV D

NAME	DATE	COMPANY
DRAWN BY		
DESIGN AUTH		

U.S. DEPARTMENT OF ENERGY
Office of River Protection

TITLE
BULK VITRIFICATION
INSTRUMENT LOOP DIAGRAM
33-H-414

SIZE	BLDG NO	INDEX NO	DWG NO	REV
B				

SCALE N/A EDT SHEET 1 OF 1

DOE_TB_B.DWG (01-01)

REF NUMBER	TITLE
F-145579-33-A-0106	PROCESS & INSTRUMENT DIAG.

REFERENCES

NEXT USED ON

MFD REV REL	REV NO	DESCRIPTION	REV BY DATE	REV BY	CHK'D BY	ENGR COMPANY

REVISIONS

DWG NO	?	SH	OF	REV

SERVICE: WASTE FEED VACUUM PUMP BEARING

In making requests for transmittal of data by any electronic media, the Company receiving such data agrees that AMEC Americas Limited cannot be held responsible for users of the data outside of or beyond the scope of our original agreement. Also, because data stored in electronic media or transmitted by electronic means can deteriorate undetected or be modified without the consultant's knowledge, the Company receiving data agrees that AMEC Americas Limited cannot be held liable for the compatibility, completeness or correctness of the data.

FIELD | MCS TERMINATION | MCS HMI

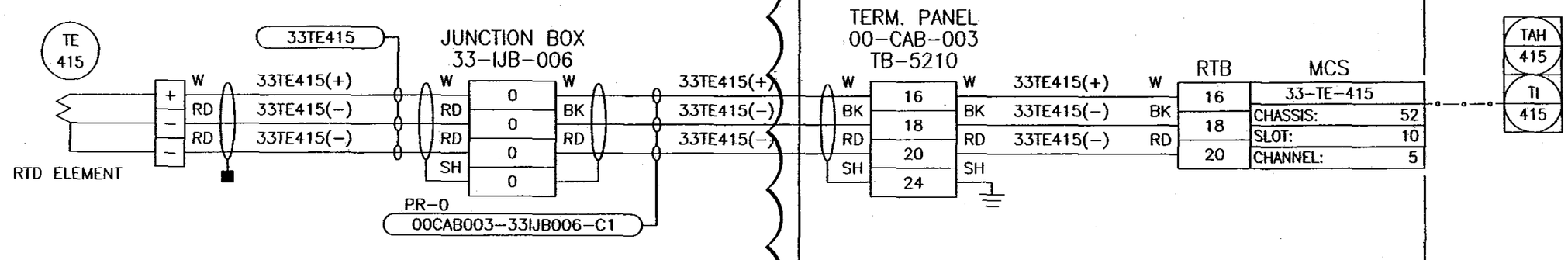

HOLD FOR VENDOR INFORMATION

Rev.	REVISION DESCRIPTION	Date	By	Chk'd	Approved Design Lead	Approved Proj Mgr
C	ISSUE FOR CH2M HILL REVIEW & 90% REPORT	15 FEB 05	BGW	RPH	JTA	TH
B	ISSUE FOR INTERNAL APPROVAL	24 JAN 05	RPH	LSK	JTA	TH
A	ISSUE FOR REVIEW	23 NOV 04	BGW	LSK	JM	TH

amec

AMEC DWG NO B-145579-33-F-0415 REV C

NAME	DATE	COMPANY
DRAWN BY		
DESIGN AUTH		

U.S. DEPARTMENT OF ENERGY
Office of River Protection

TITLE
BULK VITRIFICATION
INSTRUMENT LOOP DIAGRAM
33-T-415

SIZE	BLDG NO	INDEX NO	DWG NO	REV
B				

SCALE N/A | EDT | SHEET 1 OF 1

DOE_TB_B.DWG (01-01)

REF NUMBER	TITLE
F-145579-33-A-0106	PROCESS & INSTRUMENT DIAG.

REFERENCES

NEXT USED ON

MFD / REV REL	REV NO	DESCRIPTION	REV BY DATE	REV BY	CHK'D BY	ENGR / COMPANY

REVISIONS

SERVICE: WASTE FEED VAC PUMP

In making requests for transmittal of data by any electronic media, the Company receiving such data agrees that AMEC Americas Limited cannot be held responsible for users of the data outside of or beyond the scope of our original agreement. Also, because data stored in electronic media or transmitted by electronic means can deteriorate undetected or be modified without the consultant's knowledge, the Company receiving data agrees that AMEC Americas Limited cannot be held liable for the compatibility, completeness or correctness of the data.

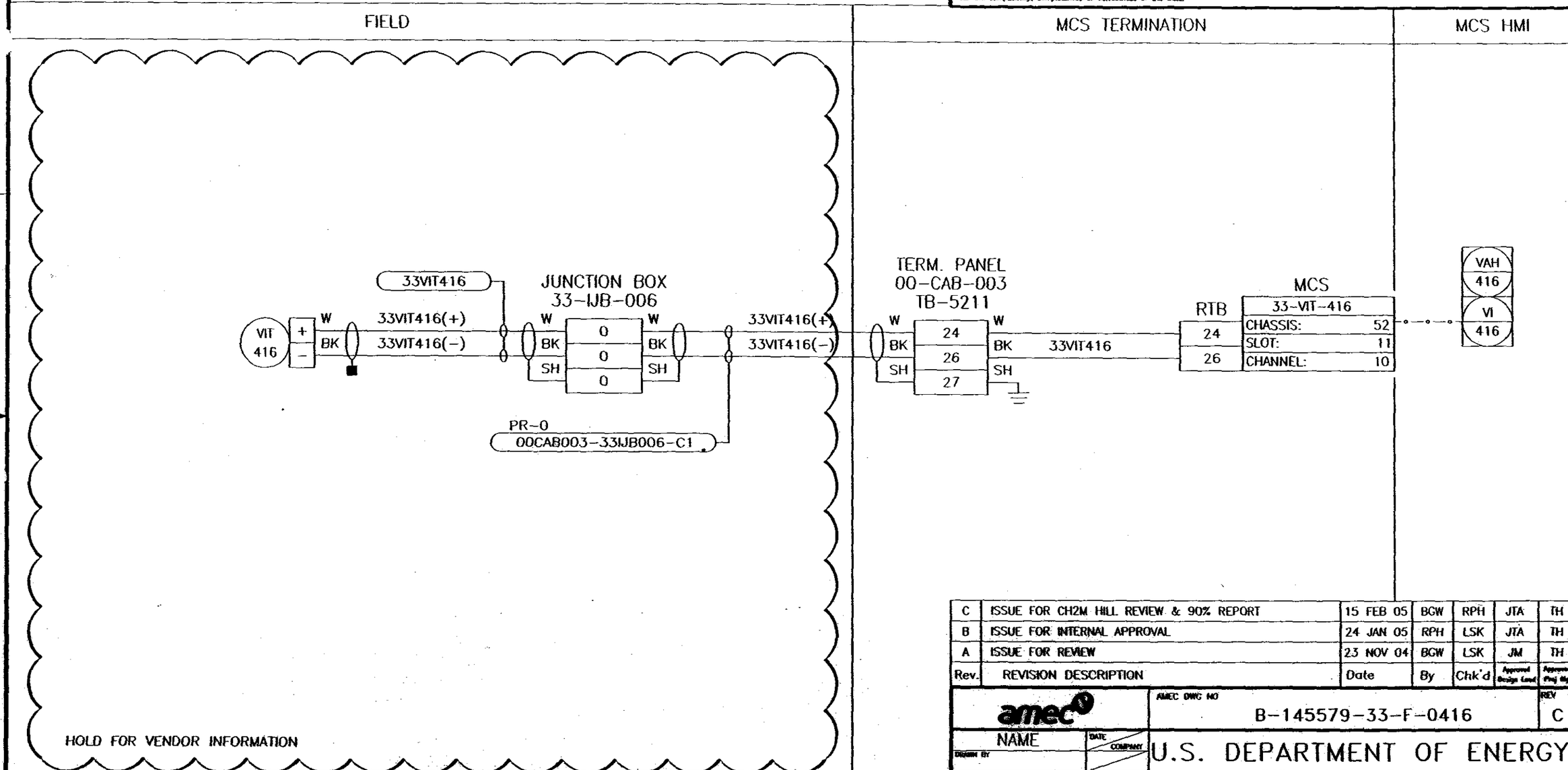

Rev.	REVISION DESCRIPTION	Date	By	Chk'd	Approved Design Lead	Approved Proj Mgr
C	ISSUE FOR CH2M HILL REVIEW & 90% REPORT	15 FEB 05	BGW	RPH	JTA	TH
B	ISSUE FOR INTERNAL APPROVAL	24 JAN 05	RPH	LSK	JTA	TH
A	ISSUE FOR REVIEW	23 NOV 04	BGW	LSK	JM	TH

amec

AMEC DWG NO: B-145579-33-F-0416 REV: C

NAME	DATE	COMPANY
DRAWN BY		
DESIGN AUTH		

U.S. DEPARTMENT OF ENERGY
Office of River Protection

TITLE: BULK VITRIFICATION INSTRUMENT LOOP DIAGRAM 33-V-416

SIZE: B | BLDG NO | INDEX NO | DWG NO | REV

SCALE: N/A | EDT | SHEET 1 OF 1

DOE_TB_B.DWG (01-01)

REF NUMBER	TITLE
F-145579-34-A-0100	PROCESS & INSTRUMENT DIAG.

REFERENCES

NEXT USED ON

REV REL	REV NO	DESCRIPTION	REV BY DATE	REV BY	CHK'D BY	ENGR	COMPANY

REVISIONS

SERVICE: DRY WASTE RECEIVER #1

In making requests for transmittal of data by any electronic media, the Company receiving such data agrees that AMEC Americas Limited cannot be held responsible for users of the data outside of or beyond the scope of our original agreement. Also, because data stored in electronic media or transmitted by electronic means can deteriorate undetected or be modified without the consultant's knowledge, the Company receiving data agrees that AMEC Americas Limited cannot be held liable for the compatibility, completeness or correctness of the data.

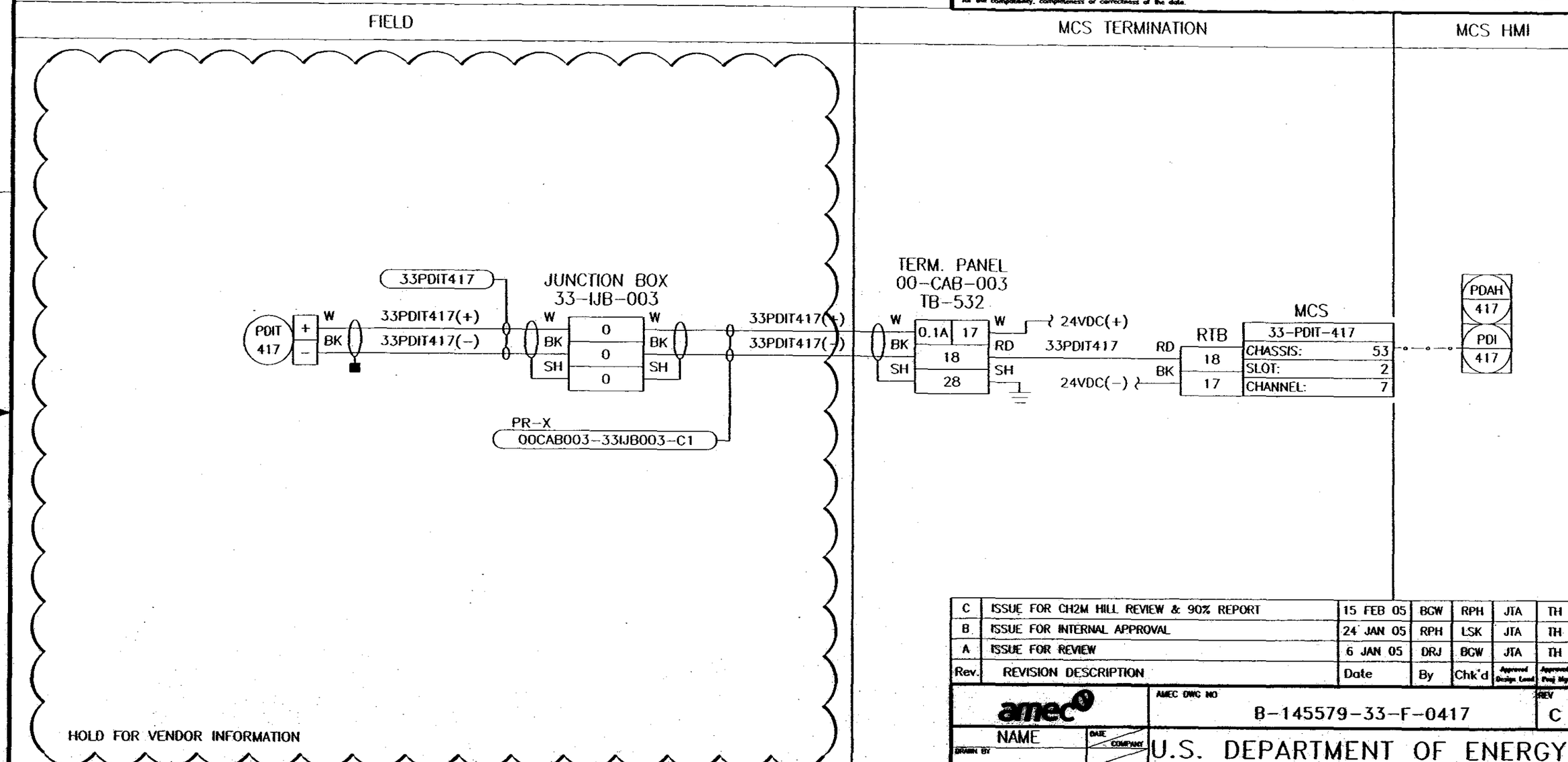

Rev.	REVISION DESCRIPTION	Date	By	Chk'd	Approved Design Lead	Approved Proj Mgr
C	ISSUE FOR CH2M HILL REVIEW & 90% REPORT	15 FEB 05	BGW	RPH	JTA	TH
B	ISSUE FOR INTERNAL APPROVAL	24 JAN 05	RPH	LSK	JTA	TH
A	ISSUE FOR REVIEW	6 JAN 05	DRJ	BGW	JTA	TH

amec

AMEC DWG NO: B-145579-33-F-0417

REV: C

NAME	DATE / COMPANY
DRAWN BY	
DESIGN AUTH	

U.S. DEPARTMENT OF ENERGY
Office of River Protection

TITLE: BULK VITRIFICATION INSTRUMENT LOOP DIAGRAM 33-P-417

SIZE	BLDG NO	INDEX NO	DWG NO	REV
B				

SCALE: N/A | EDT | SHEET 1 OF 1

DOE_TB_B.DWG (01-01)

REF NUMBER	TITLE
F-145579-33-A-0106	PROCESS & INSTRUMENT DIAG.

REFERENCES

NEXT USED ON

MFD / REV REL	REV NO	DESCRIPTION	REV BY DATE	REV BY	CHK'D BY	ENGR / COMPANY

REVISIONS

RPP-24544 REV 1b

SERVICE: DRY WASTE RECEIVER #2

In making requests for transmittal of data by any electronic media, the Company receiving such data agrees that AMEC Americas Limited cannot be held responsible for users of the data outside of or beyond the scope of our original agreement. Also, because data stored in electronic media or transmitted by electronic means can deteriorate undetected or be modified without the consultant's knowledge, the Company receiving data agrees that AMEC Americas Limited cannot be held liable for the compatibility, completeness or correctness of the data.

RPP-24544 REV 1b

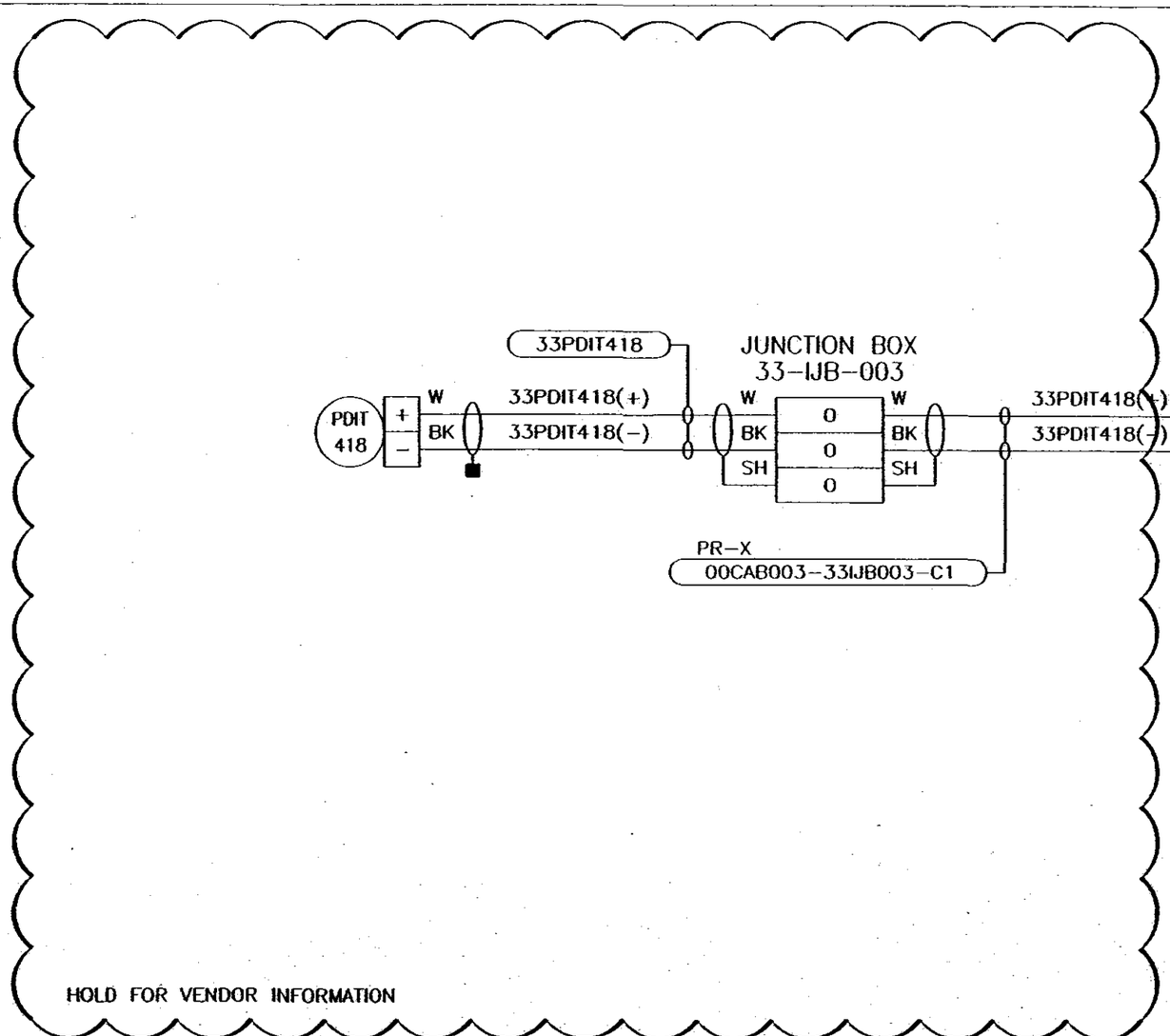

Rev.	REVISION DESCRIPTION	Date	By	Chk'd	Approved Design Lead	Approved Proj Mgr
C	ISSUE FOR CH2M HILL REVIEW & 90% REPORT	15 FEB 05	BGW	RPH	JTA	TH
B	ISSUE FOR INTERNAL APPROVAL	24 JAN 05	RPH	LSK	JTA	TH
A	ISSUE FOR REVIEW	6 JAN 05	DRJ	BGW	JTA	TH

amec

AMEC DWG NO: B–145579–33–F–0418 REV: C

NAME / DATE / COMPANY

DRAWN BY

DESIGN AUTH

U.S. DEPARTMENT OF ENERGY
Office of River Protection

TITLE: BULK VITRIFICATION INSTRUMENT LOOP DIAGRAM 33–P–418

SIZE: B | BLDG NO | INDEX NO | DWG NO | REV

SCALE: N/A | EDT | SHEET 1 OF 1

DOE_TB_B.DWG (01-01)

REF NUMBER	TITLE
F–145579–33–A–0106	PROCESS & INSTRUMENT DIAG.

REFERENCES

NEXT USED ON

MFD / REV REL	REV NO	DESCRIPTION	REV BY DATE	REV BY	CHK'D BY	ENGR / COMPANY

REVISIONS

4 3 2 1

DWG NO ? | SH | OF | REV

In making requests for transmittal of data by any electronic media, the Company receiving such data agrees that AMEC Americas Limited cannot be held responsible for errors of the data outside of or beyond the scope of our original agreement. Also, because data stored in electronic media or transmitted by electronic means can deteriorate undetected or be modified without the consultant's knowledge, the Company receiving data agrees that AMEC Americas Limited cannot be held liable for the compatibility, completeness or correctness of the data.

SERVICE: DRY WASTE RECEIVER FILTERS 1&2

FIELD | MCS TERMINATION | MCS HMI

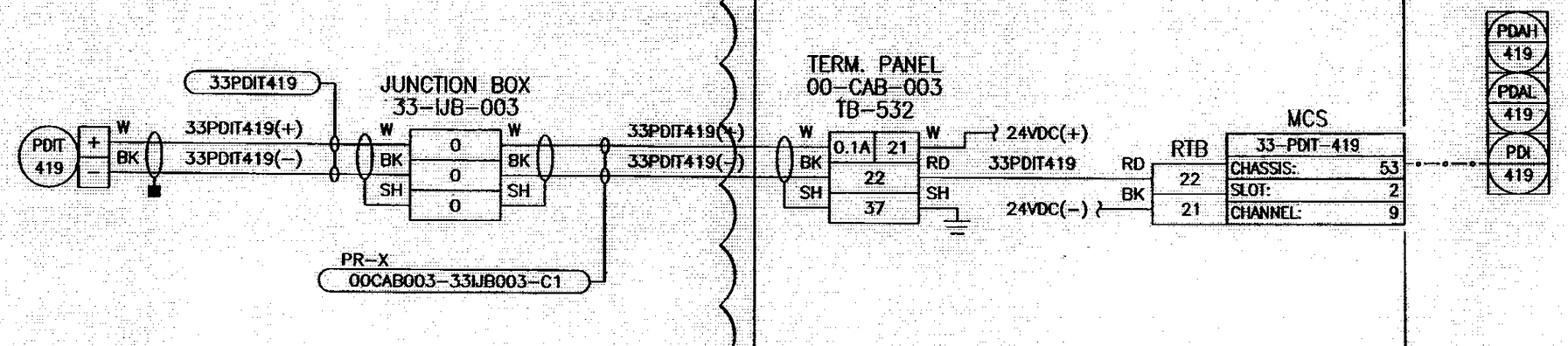

HOLD FOR VENDOR INFORMATION

Rev.	REVISION DESCRIPTION	Date	By	Chk'd	Approved Design Lead	Approved Proj Mgr
D	ADDENDUM TO CH2M HILL REVIEW & 90% REPORT	02 MAY 05	DRJ	AA	JTA	TH
C	ISSUE FOR CH2M HILL REVIEW & 90% REPORT	15 FEB 05	BGW	RPH	JTA	TH
B	ISSUE FOR INTERNAL APPROVAL	24 JAN 05	RPH	LSK	JTA	TH
A	ISSUE FOR REVIEW	6 JAN 05	DRJ	BGW	JTA	TH

amec

AMEC DWG NO: B-145579-33-F-0419 | REV: D

NAME | DATE | COMPANY

DRAWN BY

DESIGN AUTH

U.S. DEPARTMENT OF ENERGY
Office of River Protection

TITLE: BULK VITRIFICATION INSTRUMENT LOOP DIAGRAM 33-P-419

SIZE: B | BLDG NO | INDEX NO | DWG NO | REV

SCALE: N/A | EDT | SHEET 1 OF 1

DOE_TB_B.DWG (01-01)

REF NUMBER	TITLE
F-145579-33-A-0106	PROCESS & INSTRUMENT DIAG.

REFERENCES

NEXT USED ON

REV NO	DESCRIPTION	REV BY DATE	REV BY	CHK'D BY	ENGR	COMPANY

MFD | REV REL

REVISIONS

DWG NO ? | SH OF | REV

SERVICE: DRY WASTE RECEIVER FILTER #1 INLET

In making requests for transmittal of data by any electronic media, the Company receiving such data agrees that AMEC Americas Limited cannot be held responsible for users of the data outside of or beyond the scope of our original agreement. Also, because data stored in electronic media or transmitted by electronic means can deteriorate undetected or be modified without the consultant's knowledge, the Company receiving data agrees that AMEC Americas Limited cannot be held liable for the compatibility, completeness or correctness of the data.

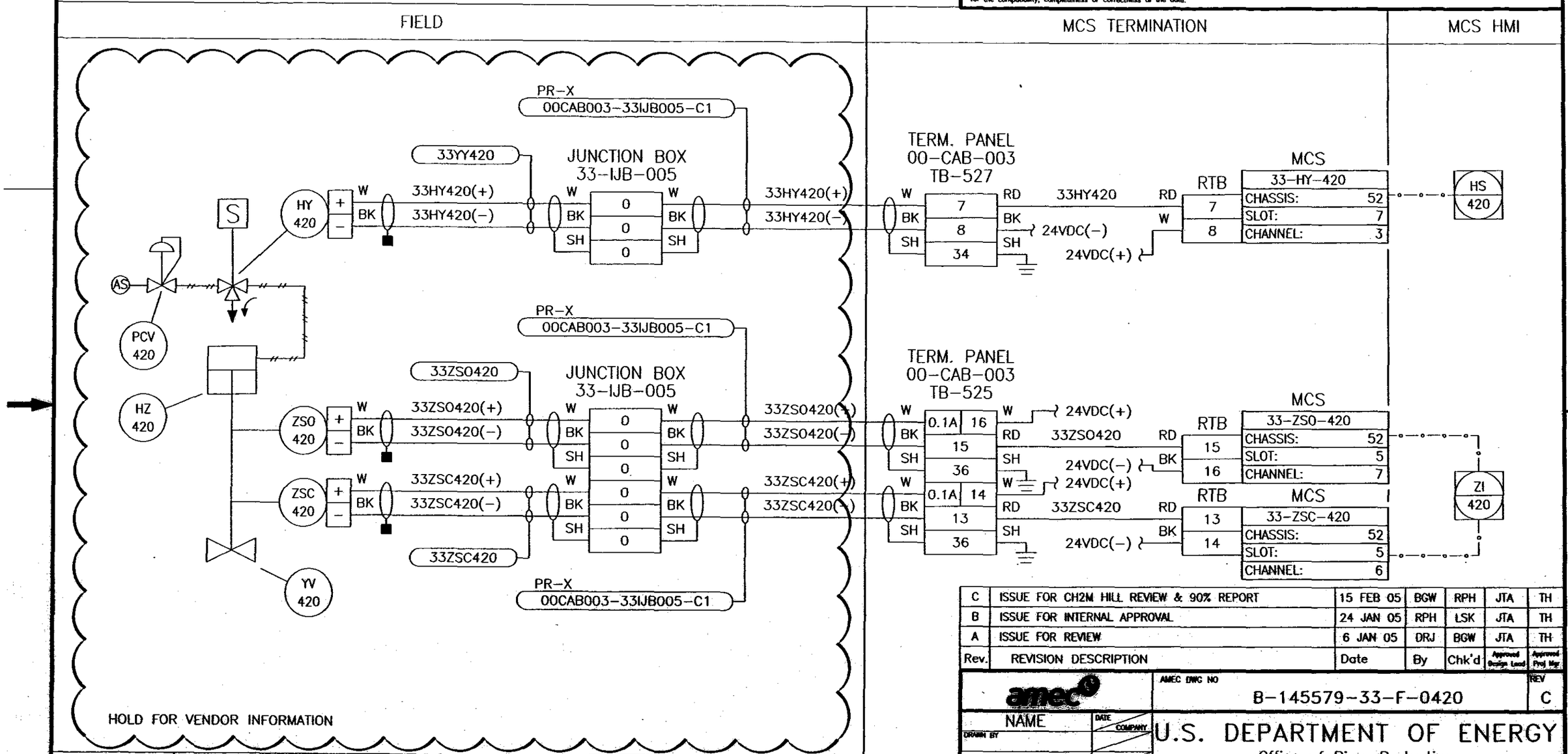

Rev.	REVISION DESCRIPTION	Date	By	Chk'd	Approved Design Lead	Approved Proj Mgr
C	ISSUE FOR CH2M HILL REVIEW & 90% REPORT	15 FEB 05	BGW	RPH	JTA	TH
B	ISSUE FOR INTERNAL APPROVAL	24 JAN 05	RPH	LSK	JTA	TH
A	ISSUE FOR REVIEW	6 JAN 05	DRJ	BGW	JTA	TH

amec

AMEC DWG NO B-145579-33-F-0420 REV C

NAME | DATE | COMPANY

DRAWN BY

DESIGN AUTH

U.S. DEPARTMENT OF ENERGY
Office of River Protection

TITLE
BULK VITRIFICATION
INSTRUMENT LOOP DIAGRAM
33-H-420

SIZE B | BLDG NO | INDEX NO | DWG NO | REV

SCALE N/A | EDT | SHEET 1 OF 1

DOE_TB_B.DWG (01-01)

REF NUMBER	TITLE
F-145579-33-A-0106	PROCESS & INSTRUMENT DIAG.

REFERENCES

NEXT USED ON

MFD REV REL	REV NO	DESCRIPTION	REV BY DATE	REV BY	CHK'D BY	ENGR COMPANY

REVISIONS

DWG NO	?	SH	OF	REV

SERVICE: DRY WASTE RECEIVER FILTER #2 INLET

In making requests for transmittal of data by any electronic media, the Company receiving such data agrees that AMEC Americas Limited cannot be held responsible for users of the data outside of or beyond the scope of our original agreement. Also, because data stored in electronic media or transmitted by electronic means can deteriorate undetected or be modified without the consultant's knowledge, the Company receiving data agrees that AMEC Americas Limited cannot be held liable for the compatibility, completeness or correctness of the data.

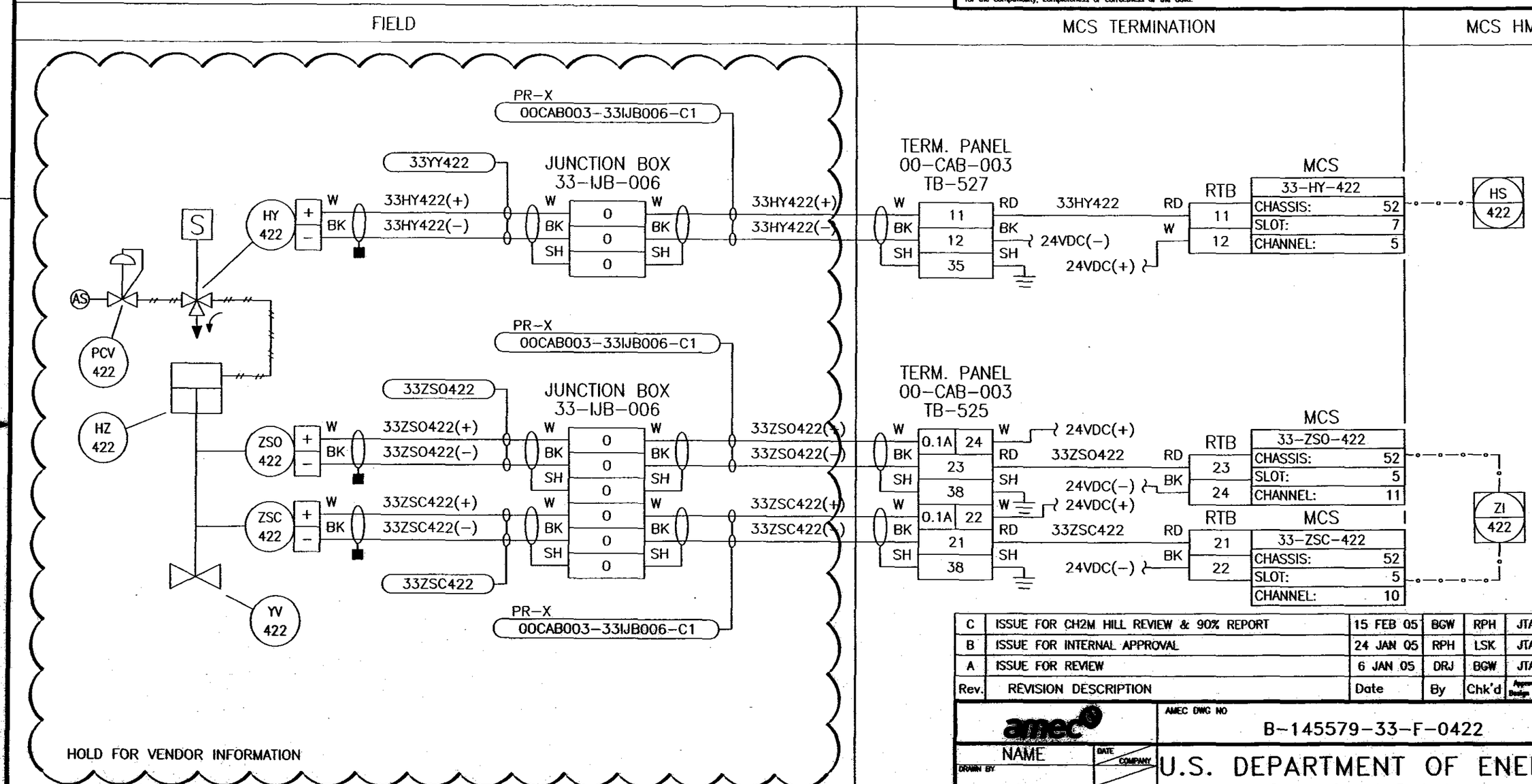

Rev.	REVISION DESCRIPTION	Date	By	Chk'd	Approved Design Lead	Approved Proj Mgr
C	ISSUE FOR CH2M HILL REVIEW & 90% REPORT	15 FEB 05	BGW	RPH	JTA	TH
B	ISSUE FOR INTERNAL APPROVAL	24 JAN 05	RPH	LSK	JTA	TH
A	ISSUE FOR REVIEW	6 JAN 05	DRJ	BGW	JTA	TH

amec

AMEC DWG NO B-145579-33-F-0422 REV C

NAME	DATE	COMPANY
DRAWN BY		
DESIGN AUTH		

U.S. DEPARTMENT OF ENERGY
Office of River Protection

TITLE
BULK VITRIFICATION
INSTRUMENT LOOP DIAGRAM
33-H-422

SIZE	BLDG NO	INDEX NO	DWG NO	REV
B				

SCALE N/A | EDT | SHEET 1 OF 1

REF NUMBER	TITLE
F-145579-33-A-0106	PROCESS & INSTRUMENT DIAG.

REFERENCES

NEXT USED ON

MFD REV REL	REV NO	DESCRIPTION	REV BY DATE	REV BY	CHK'D BY	ENGR. COMPANY

REVISIONS

DOE_TB_B.DWG (01-01)

DWG NO ? | SH OF | REV

SERVICE: DRY WASTE RECEIVER FILTER #2 OUTLET

In making requests for transmittal of data by any electronic media, the Company receiving such data agrees that AMEC Americas Limited cannot be held responsible for users of the data outside of or beyond the scope of our original agreement. Also, because data stored in electronic media or transmitted by electronic means can deteriorate undetected or be modified without the consultant's knowledge, the Company receiving data agrees that AMEC Americas Limited cannot be held liable for the compatibility, completeness or correctness of the data.

RPP-24544 REV 1b

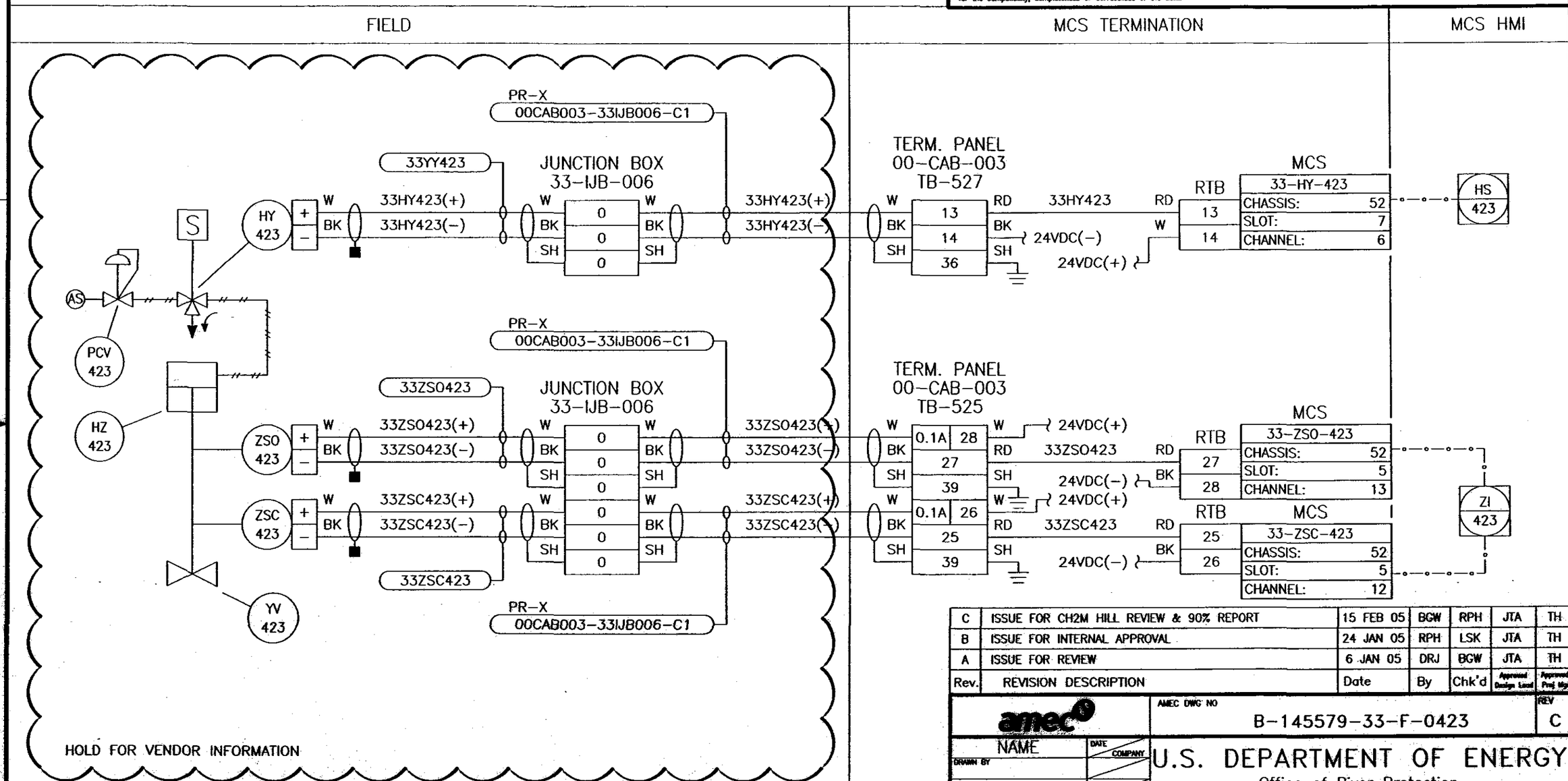

Rev.	REVISION DESCRIPTION	Date	By	Chk'd	Approved Design Lead	Approved Proj Mgr
C	ISSUE FOR CH2M HILL REVIEW & 90% REPORT	15 FEB 05	BGW	RPH	JTA	TH
B	ISSUE FOR INTERNAL APPROVAL	24 JAN 05	RPH	LSK	JTA	TH
A	ISSUE FOR REVIEW	6 JAN 05	DRJ	BGW	JTA	TH

amec

AMEC DWG NO B-145579-33-F-0423 REV C

NAME	DATE	COMPANY
DRAWN BY		
DESIGN AUTH		

U.S. DEPARTMENT OF ENERGY
Office of River Protection

TITLE
BULK VITRIFICATION
INSTRUMENT LOOP DIAGRAM
33-H-423

SIZE B | BLDG NO | INDEX NO | DWG NO | REV
SCALE N/A | EDT | SHEET 1 OF 1

REF NUMBER	TITLE
F-145579-33-A-0106	PROCESS & INSTRUMENT DIAG.

REFERENCES

NEXT USED ON

MFD REV REL	REV NO	DESCRIPTION	REV BY DATE	REV BY	CHK'D BY	ENGR COMPANY

REVISIONS

DOE_TB_B.DWG (01-01)

DWG NO ? | SH | OF | REV

SERVICE: DRY WASTE RECEIVER FILTER #3

In making requests for transmittal of data by any electronic media, the Company receiving such data agrees that AMEC Americas Limited cannot be held responsible for users of the data outside of or beyond the scope of our original agreement. Also, because data stored in electronic media or transmitted by electronic means can deteriorate undetected or be modified without the consultant's knowledge, the Company receiving data agrees that AMEC Americas Limited cannot be held liable for the compatibility, completeness or correctness of the data.

FIELD | MCS TERMINATION | MCS HMI

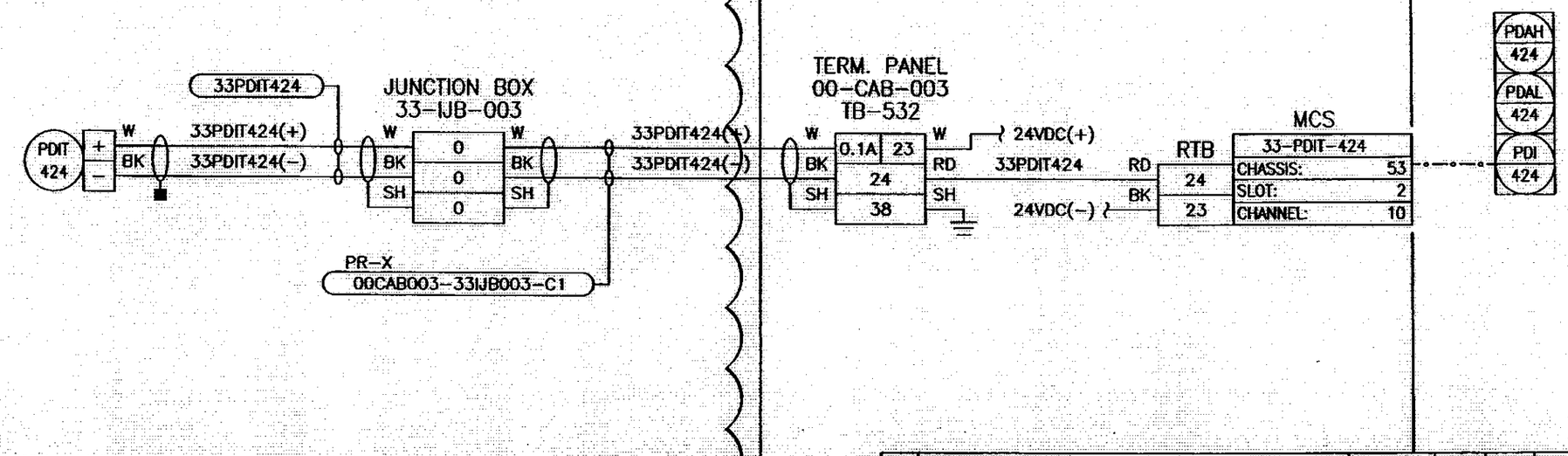

HOLD FOR VENDOR INFORMATION

Rev.	REVISION DESCRIPTION	Date	By	Chk'd	Approved Design Lead	Approved Proj Mgr
D	ADDENDUM TO CH2M HILL REVIEW & 90% REPORT	02 MAY 05	DRJ	AA	JTA	TH
C	ISSUE FOR CH2M HILL REVIEW & 90% REPORT	15 FEB 05	BGW	RPH	JTA	TH
B	ISSUE FOR INTERNAL APPROVAL	24 JAN 05	RPH	LSK	JTA	TH
A	ISSUE FOR REVIEW	6 JAN 05	DRJ	BGW	JTA	TH

amec

AMEC DWG NO: B-145579-33-F-0424 REV: D

NAME | DATE | COMPANY

DRAWN BY

DESIGN AUTH

U.S. DEPARTMENT OF ENERGY
Office of River Protection

TITLE: BULK VITRIFICATION INSTRUMENT LOOP DIAGRAM 33-P-424

SIZE: B | BLDG NO | INDEX NO | DWG NO | REV

SCALE: N/A | EDT | SHEET 1 OF 1

DOE_TB_B.DWG (01-01)

REF NUMBER	TITLE
F-145579-33-A-0106	PROCESS & INSTRUMENT DIAG.

REFERENCES

NEXT USED ON

MFD	REV NO	DESCRIPTION	REV BY DATE	REV BY	CHK'D BY	ENGR	COMPANY

REV REL

REVISIONS

DWG NO	?	SH	OF	REV

In making requests for transmittal of data by any electronic media, the Company receiving such data agrees that AMEC Americas Limited cannot be held responsible for users of the data outside of or beyond the scope of our original agreement. Also, because data stored in electronic media or transmitted by electronic means can deteriorate undetected or be modified without the consultant's knowledge, the Company receiving data agrees that AMEC Americas Limited cannot be held liable for the compatibility, completeness or correctness of the data.

SERVICE: DRY WASTE SILO No.1 AIRLOCK No.1

FIELD | MCS TERMINATION | MCS HMI

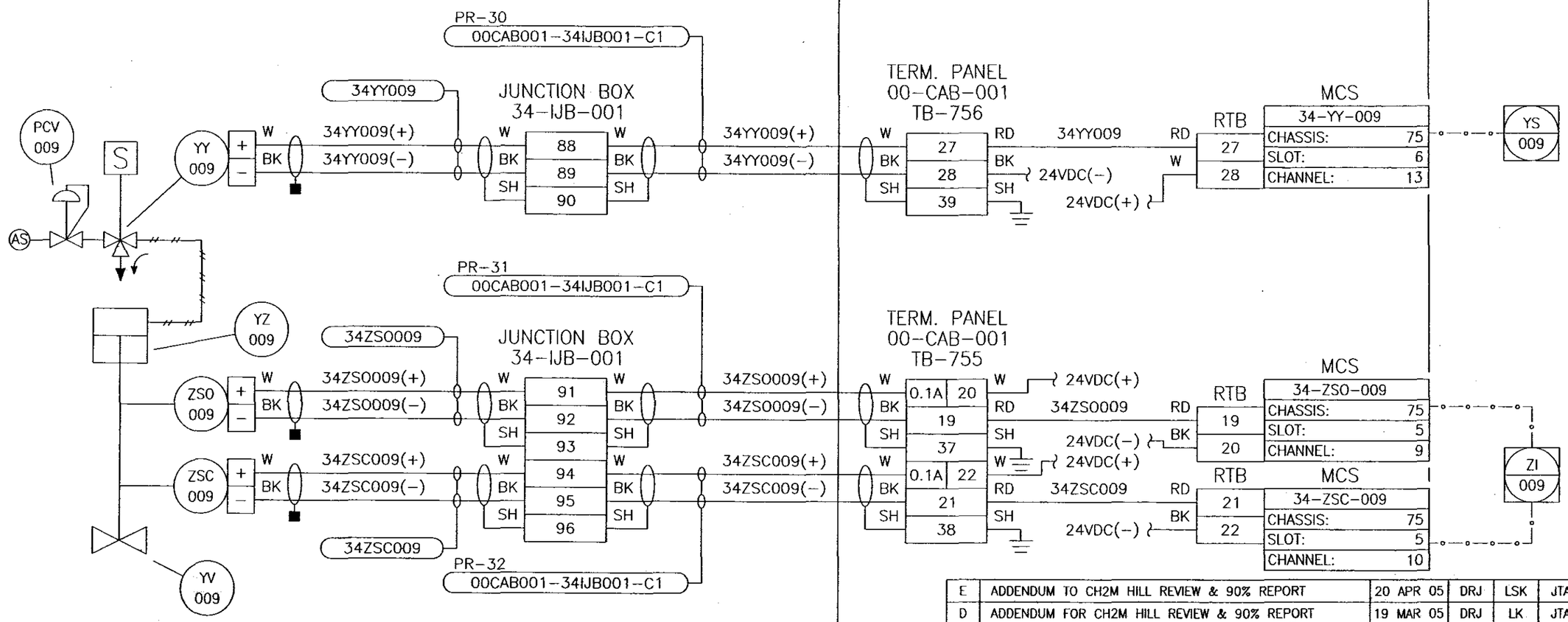

Rev.	REVISION DESCRIPTION	Date	By	Chk'd	Approved Design Lead	Approved Proj Mgr
E	ADDENDUM TO CH2M HILL REVIEW & 90% REPORT	20 APR 05	DRJ	LSK	JTA	TH
D	ADDENDUM FOR CH2M HILL REVIEW & 90% REPORT	19 MAR 05	DRJ	LK	JTA	TH
C	ISSUE FOR CH2M HILL REVIEW & 90% REPORT	24 FEB 05	BGW	RPH	JTA	TH

amec

AMEC DWG NO B-145579-34-F-0009 REV E

NAME	DATE / COMPANY
DRAWN BY	
DESIGN AUTH	

U.S. DEPARTMENT OF ENERGY
Office of River Protection

TITLE
BULK VITRIFICATION
INSTRUMENT LOOP DIAGRAM
34-Y-009

SIZE	BLDG NO	INDEX NO	DWG NO	REV
B				

SCALE N/A | EDT | SHEET 1 OF 1

REF NUMBER	TITLE
F-145579-00-F-0041	SAFETY SYSTEM CABINET LAYOUT
F-145579-00-F-0050	SAFETY SYSTEM BLOCK DIAGRAM
F-145579-00-F-0051	SAFETY SYSTEM WIRING DIAGRAM
F-145579-34-A-0101	PROCESS & INSTRUMENT DIAG.

REFERENCES

NEXT USED ON

MFD / REV REL	REV NO	DESCRIPTION	REV BY DATE	REV BY	CHK'D BY	ENGR / COMPANY

REVISIONS

DOE_TB_B.DWG (01-01)

DWG NO	?	SH	OF	REV

SERVICE: DRY WASTE SILO NO.1 AIRLOCK NO.2

In making requests for transmittal of data by any electronic media, the Company receiving such data agrees that AMEC Americas Limited cannot be held responsible for users of the data outside of or beyond the scope of our original agreement. Also, because data stored in electronic media or transmitted by electronic means can deteriorate undetected or be modified without the consultant's knowledge, the Company receiving data agrees that AMEC Americas Limited cannot be held liable for the compatibility, completeness or correctness of the data.

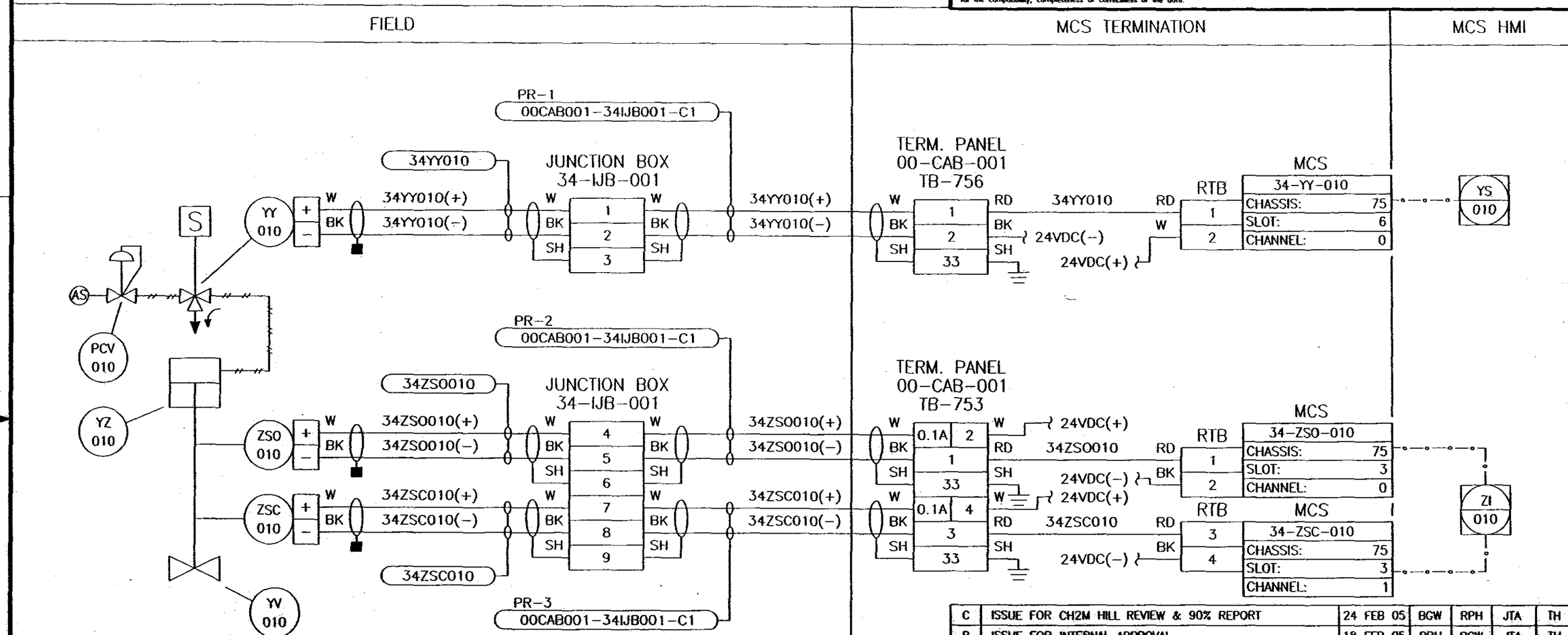

Rev.	REVISION DESCRIPTION	Date	By	Chk'd	Approved Design Lead	Approved Proj Mgr
C	ISSUE FOR CH2M HILL REVIEW & 90% REPORT	24 FEB 05	BGW	RPH	JTA	TH
B	ISSUE FOR INTERNAL APPROVAL	18 FEB 05	RPH	BGW	JTA	TH
A	ISSUE FOR REVIEW	23 NOV 04	BGW	LSK	JM	TH

amec

AMEC DWG NO: B-145579-34-F-0010 REV: C

NAME / DATE / COMPANY

DRAWN BY

DESIGN AUTH

U.S. DEPARTMENT OF ENERGY
Office of River Protection

TITLE: BULK VITRIFICATION INSTRUMENT LOOP DIAGRAM 34-Y-010

SIZE: B | BLDG NO | INDEX NO | DWG NO | REV

SCALE: N/A | EDT | SHEET 1 OF 1

REF NUMBER	TITLE
F-145579-34-A-0101	PROCESS & INSTRUMENT DIAG.

REFERENCES

NEXT USED ON

MFD REV REL	REV NO	DESCRIPTION	REV BY DATE	REV BY	CHK'D BY	ENGR COMPANY

REVISIONS

DOE_TB_B.DWG (01-01)

DWG NO	?	SH	OF	REV

In making requests for transmittal of data by any electronic media, the Company receiving such data agrees that AMEC Americas Limited cannot be held responsible for users of the data outside of or beyond the scope of our original agreement. Also, because data stored in electronic media or transmitted by electronic means can deteriorate undetected or be modified without the consultant's knowledge, the Company receiving data agrees that AMEC Americas Limited cannot be held liable for the compatibility, completeness or correctness of the data.

SERVICE: DRY WASTE SILO No.2 AIRLOCK No.1

FIELD | MCS TERMINATION | MCS HMI

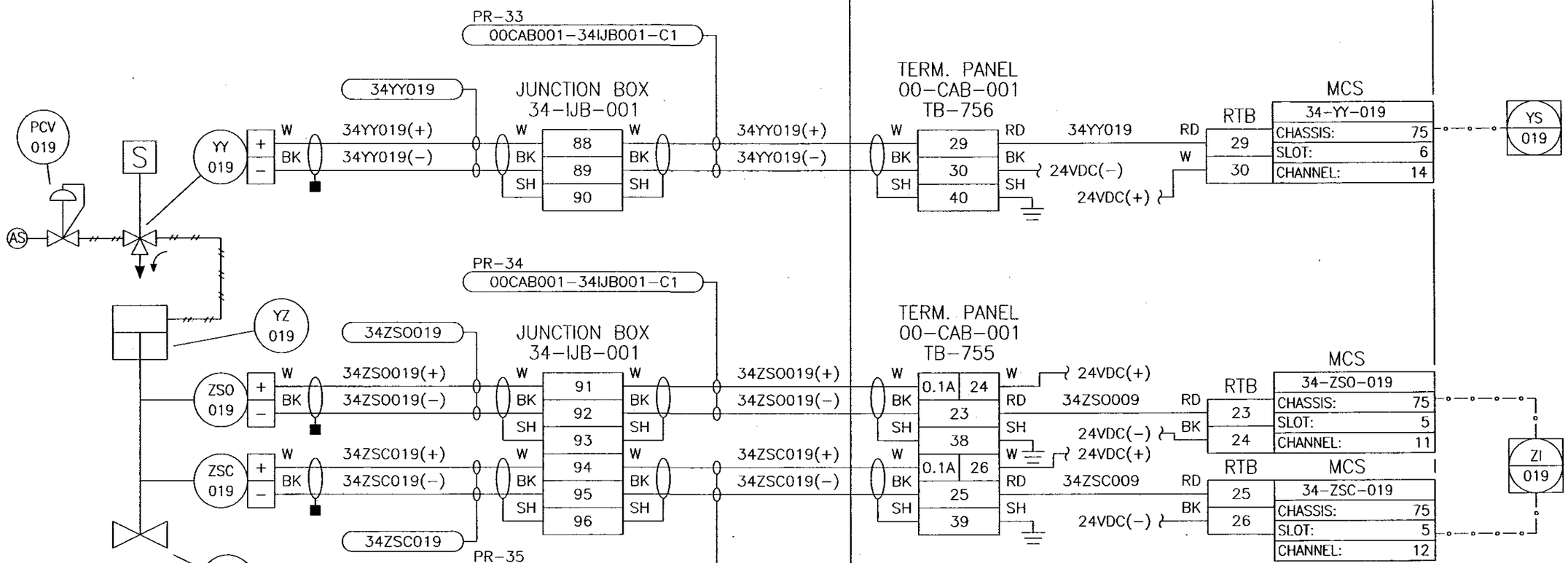

Rev.	REVISION DESCRIPTION	Date	By	Chk'd	Approved Design Lead	Approved Proj Mgr
E	ADDENDUM TO CH2M HILL REVIEW & 90% REPORT	20 APR 05	DRJ	LSK	JTA	TH
D	ADDENDUM FOR CH2M HILL REVIEW & 90% REPORT	19 MAR 05	DRJ	LK	JTA	TH
C	ISSUE FOR CH2M HILL REVIEW & 90% REPORT	24 FEB 05	BGW	RPH	JTA	TH

amec

AMEC DWG NO B-145579-34-F-0019 REV E

NAME	DATE / COMPANY
DRAWN BY	
DESIGN AUTH	

U.S. DEPARTMENT OF ENERGY
Office of River Protection

TITLE
BULK VITRIFICATION
INSTRUMENT LOOP DIAGRAM
34-Y-019

SIZE	BLDG NO	INDEX NO	DWG NO	REV
B				

SCALE N/A | EDT | SHEET 1 OF 1

REF NUMBER	TITLE
F-145579-00-F-0041	SAFETY SYSTEM CABINET LAYOUT
F-145579-00-F-0050	SAFETY SYSTEM BLOCK DIAGRAM
F-145579-00-F-0051	SAFETY SYSTEM WIRING DIAGRAM
F-145579-34-A-0101	PROCESS & INSTRUMENT DIAG.

REFERENCES

NEXT USED ON

MFD REV REL	REV NO	DESCRIPTION	REV BY DATE	REV BY	CHK'D BY	ENGR COMPANY

REVISIONS

DOE_TB_B.DWG (01-01)

DWG NO	?	SH	OF	REV

SERVICE: DRY WASTE SILO NO.2 AIRLOCK NO.2

In making requests for transmittal of data by any electronic media, the Company receiving such data agrees that AMEC Americas Limited cannot be held responsible for users of the data outside of or beyond the scope of our original agreement. Also, because data stored in electronic media or transmitted by electronic means can deteriorate undetected or be modified without the consultant's knowledge, the Company receiving data agrees that AMEC Americas Limited cannot be held liable for the compatibility, completeness or correctness of the data.

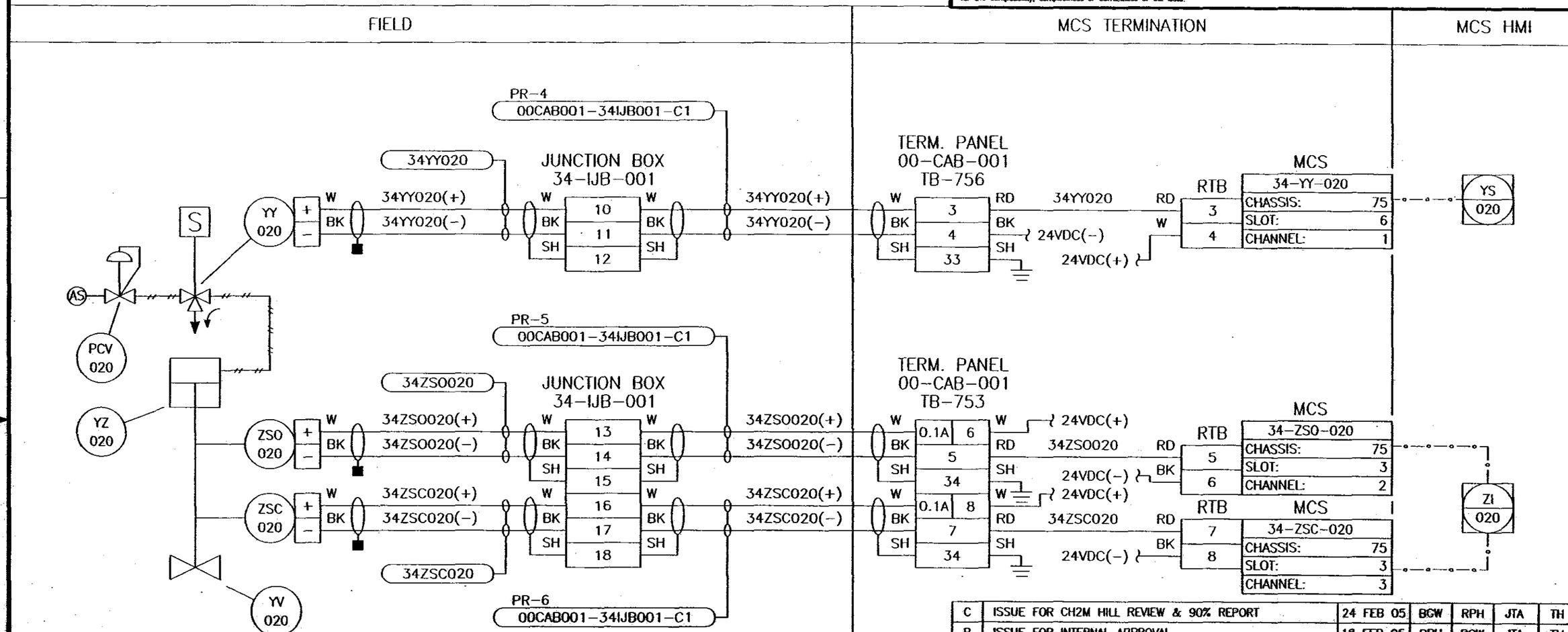

Rev.	REVISION DESCRIPTION	Date	By	Chk'd	Approved Design Lead	Approved Proj Mgr
C	ISSUE FOR CH2M HILL REVIEW & 90% REPORT	24 FEB 05	BGW	RPH	JTA	TH
B	ISSUE FOR INTERNAL APPROVAL	18 FEB 05	RPH	BGW	JTA	TH
A	ISSUE FOR REVIEW	23 NOV 04	BGW	LSK	JM	TH

amec

AMEC DWG NO B-145579-34-F-0020 REV C

NAME	DATE	COMPANY
DRAWN BY		
DESIGN AUTH		

U.S. DEPARTMENT OF ENERGY
Office of River Protection

TITLE
BULK VITRIFICATION
INSTRUMENT LOOP DIAGRAM
34-Y-020

SIZE	BLDG NO	INDEX NO	DWG NO	REV
B				

SCALE N/A | EDT | SHEET 1 OF 1

REF NUMBER	TITLE
F-145579-34-A-0101	PROCESS & INSTRUMENT DIAG.

REFERENCES

NEXT USED ON

MFD REV REL	REV NO	DESCRIPTION	REV BY DATE	REV BY	CHK'D BY	ENGR	COMPANY

REVISIONS

DOE_TB_B.DWG (01-01)

DWG NO	?	SH	OF	REV

In making requests for transmittal of data by any electronic media, the Company receiving such data agrees that AMEC Americas Limited cannot be held responsible for users of the data outside of or beyond the scope of our original agreement. Also, because data stored in electronic media or transmitted by electronic means can deteriorate undetected or be modified without the consultant's knowledge, the Company receiving data agrees that AMEC Americas Limited cannot be held liable for the compatibility, completeness or correctness of the data.

SERVICE: AWTE HOOD LOCATION NO. 1

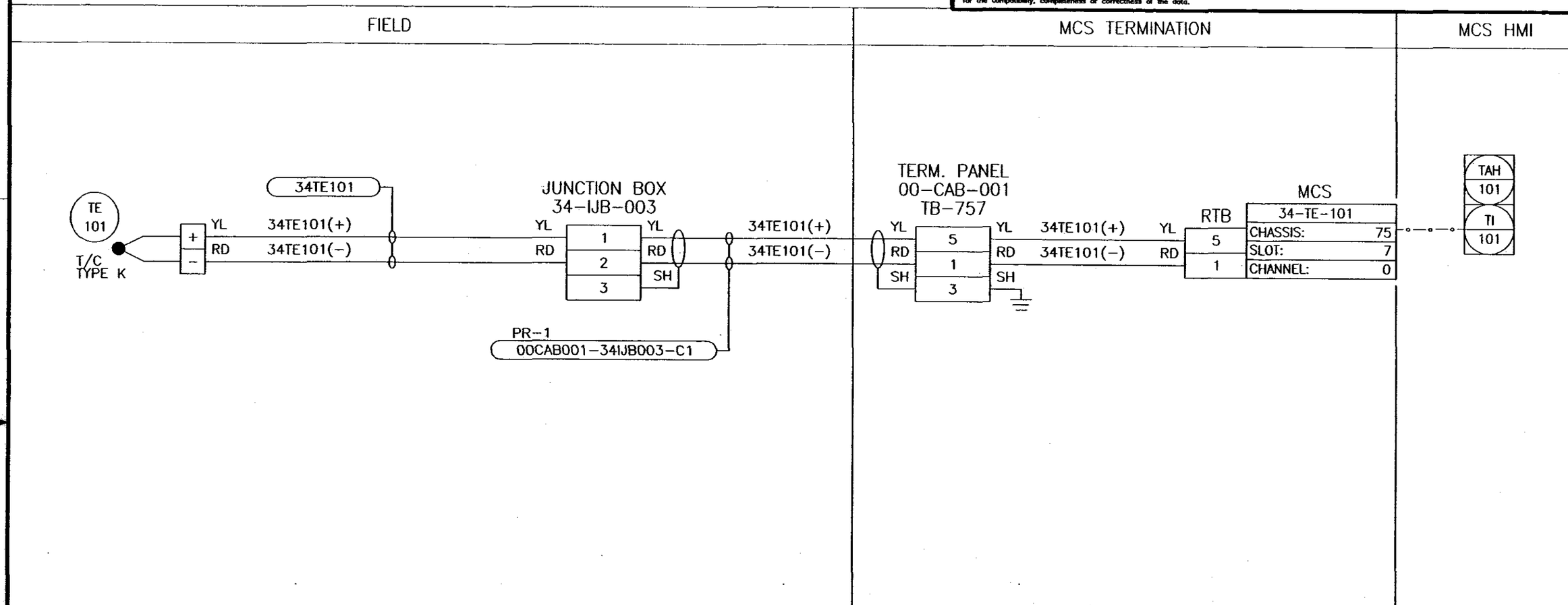

Rev.	REVISION DESCRIPTION	Date	By	Chk'd	Approved Design Lead	Approved Proj Mgr
C	ISSUE FOR CH2M HILL REVIEW & 90% REPORT	24 FEB 05	BGW	RPH	JTA	TH
B	ISSUE FOR INTERNAL APPROVAL	18 FEB 05	RPH	BGW	JTA	TH
A	ISSUE FOR REVIEW	23 NOV 04	BGW	LSK	JM	TH

amec

AMEC DWG NO: B-145579-34-F-0101 REV: C

NAME	DATE	COMPANY
DRAWN BY		
DESIGN AUTH		

U.S. DEPARTMENT OF ENERGY
Office of River Protection

TITLE: BULK VITRIFICATION INSTRUMENT LOOP DIAGRAM 34-T-101

SIZE	BLDG NO	INDEX NO	DWG NO	REV
B				

SCALE: N/A EDT: SHEET 1 OF 1

DOE_TB_B.DWG (01-01)

REF NUMBER	TITLE
F-145579-34-A-0101	PROCESS & INSTRUMENT DIAG.

REFERENCES

NEXT USED ON

MFD REV REL	REV NO	DESCRIPTION	REV BY DATE	REV BY	CHK'D BY	ENGR COMPANY

REVISIONS

DWG NO ? | SH OF | REV

SERVICE: AWTE HOOD LOCATION NO. 2

In making requests for transmittal of data by any electronic media, the Company receiving such data agrees that AMEC Americas Limited cannot be held responsible for users of the data outside of or beyond the scope of our original agreement. Also, because data stored in electronic media or transmitted by electronic means can deteriorate undetected or be modified without the consultant's knowledge, the Company receiving data agrees that AMEC Americas Limited cannot be held liable for the compatibility, completeness or correctness of the data.

RPP-24544 REV 1b

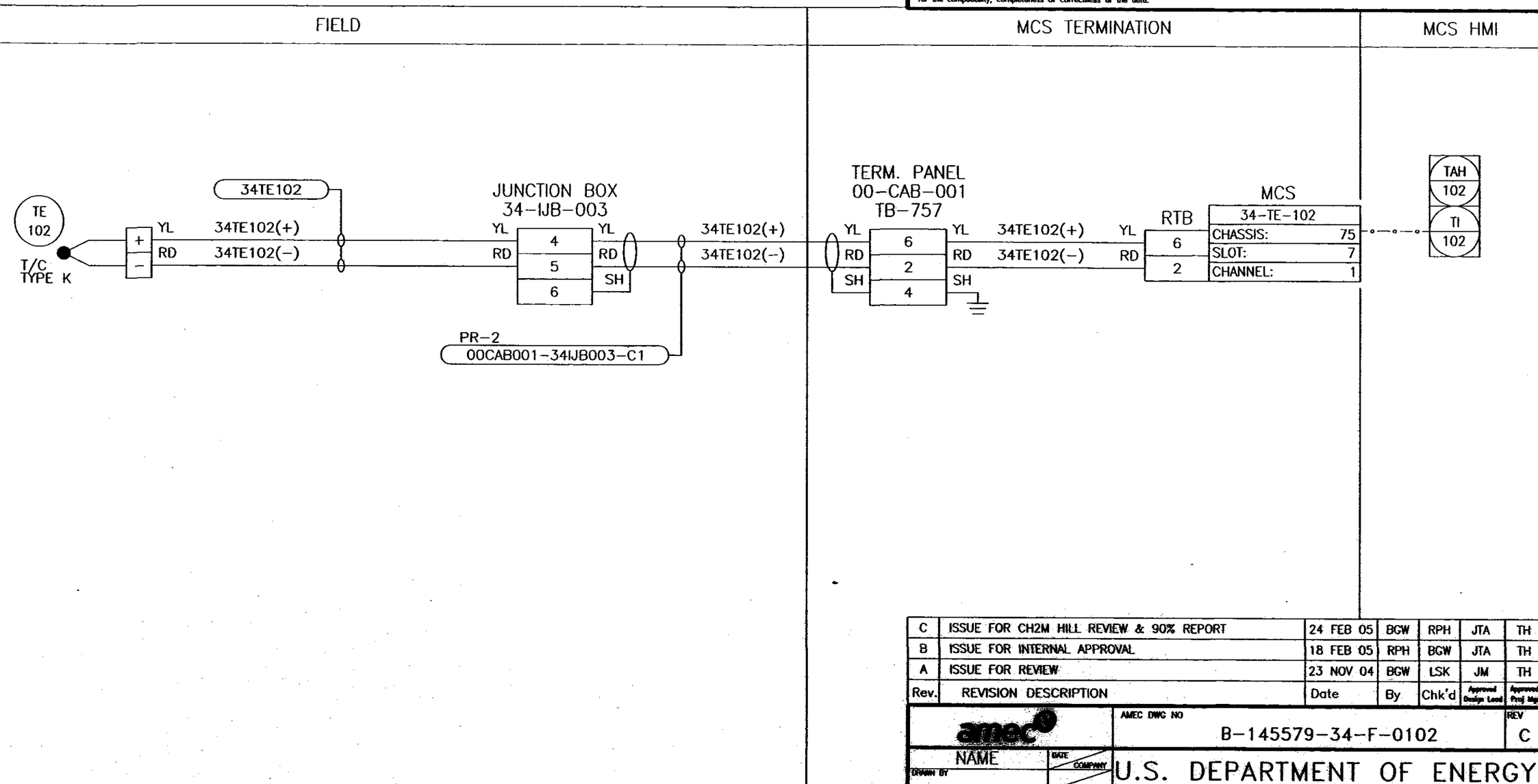

Rev.	REVISION DESCRIPTION	Date	By	Chk'd	Approved Design Lead	Approved Proj Mgr
C	ISSUE FOR CH2M HILL REVIEW & 90% REPORT	24 FEB 05	BGW	RPH	JTA	TH
B	ISSUE FOR INTERNAL APPROVAL	18 FEB 05	RPH	BGW	JTA	TH
A	ISSUE FOR REVIEW	23 NOV 04	BGW	LSK	JM	TH

amec

AMEC DWG NO B-145579-34-F-0102 REV C

NAME | DATE | COMPANY

DRAWN BY

DESIGN AUTH

U.S. DEPARTMENT OF ENERGY
Office of River Protection

TITLE
BULK VITRIFICATION
INSTRUMENT LOOP DIAGRAM
34-T-102

SIZE B | BLDG NO | INDEX NO | DWG NO | REV

SCALE N/A | EDT | SHEET 1 OF 1

DOE_TB_B.DWG (01-01)

REF NUMBER	TITLE
F-145579-34-A-0101	PROCESS & INSTRUMENT DIAG.

REFERENCES

NEXT USED ON

MFD REV REL	REV NO	DESCRIPTION	REV BY DATE	REV BY	CHK'D BY	ENGR COMPANY

REVISIONS

DWG NO	?	SH	OF	REV

In making requests for transmittal of data by any electronic media, the Company receiving such data agrees that AMEC Americas Limited cannot be held responsible for users of the data outside of or beyond the scope of our original agreement. Also, because data stored in electronic media or transmitted by electronic means can deteriorate undetected or be modified without the consultant's knowledge, the Company receiving data agrees that AMEC Americas Limited cannot be held liable for the compatibility, completeness or correctness of the data.

SERVICE: AWTE HOOD LOCATION NO. 3

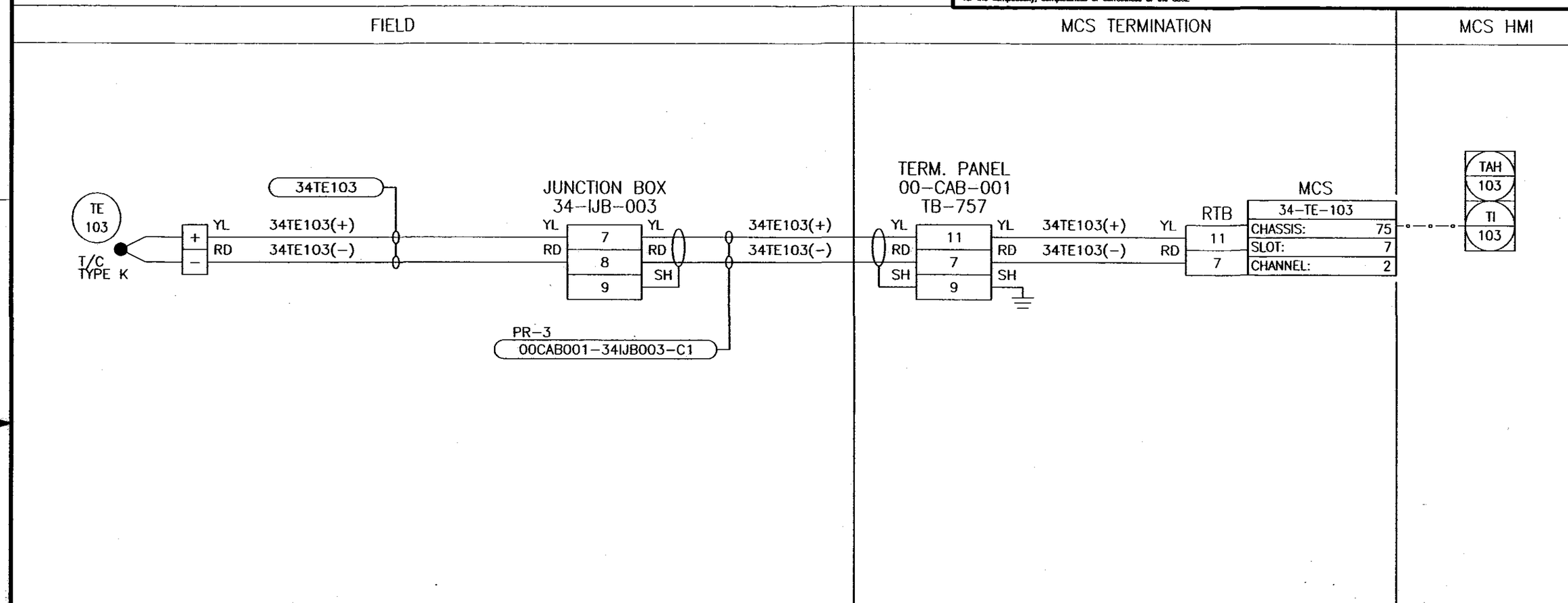

Rev.	REVISION DESCRIPTION	Date	By	Chk'd	Approved Design Lead	Approved Proj Mgr
C	ISSUE FOR CH2M HILL REVIEW & 90% REPORT	24 FEB 05	BGW	RPH	JTA	TH
B	ISSUE FOR INTERNAL APPROVAL	18 FEB 05	RPH	BGW	JTA	TH
A	ISSUE FOR REVIEW	23 NOV 04	BGW	LSK	JM	TH

amec

AMEC DWG NO B−145579−34−F−0103 REV C

NAME	DATE	COMPANY
DRAWN BY		
DESIGN AUTH		

U.S. DEPARTMENT OF ENERGY
Office of River Protection

TITLE
BULK VITRIFICATION
INSTRUMENT LOOP DIAGRAM
34−T−103

SIZE	BLDG NO	INDEX NO	DWG NO	REV
B				

SCALE N/A | EDT | SHEET 1 OF 1

DOE_TB_B.DWG (01−01)

REF NUMBER	TITLE
F−145579−34−A−0101	PROCESS & INSTRUMENT DIAG.

REFERENCES

NEXT USED ON

MFD	REV NO	DESCRIPTION	REV BY DATE	REV BY	CHK'D BY	ENGR	COMPANY
REV REL		REVISIONS					

RPP-24544 REV 1b

DWG NO	?	SH	OF	REV

In making requests for transmittal of data by any electronic media, the Company receiving such data agrees that AMEC Americas Limited cannot be held responsible for users of the data outside of or beyond the scope of our original agreement. Also, because data stored in electronic media or transmitted by electronic means can deteriorate undetected or be modified without the consultant's knowledge, the Company receiving data agrees that AMEC Americas Limited cannot be held liable for the compatibility, completeness or correctness of the data.

SERVICE: AWTE HOOD LOCATION NO. 4

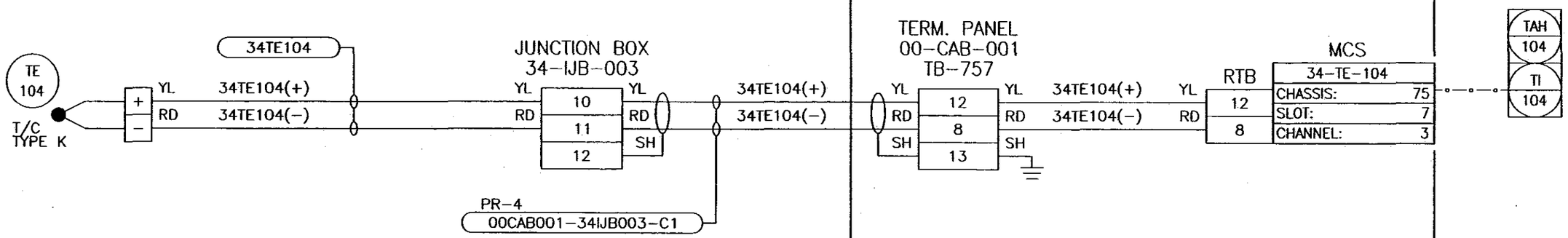

Rev.	REVISION DESCRIPTION	Date	By	Chk'd	Approved Design Lead	Approved Proj Mgr
C	ISSUE FOR CH2M HILL REVIEW & 90% REPORT	24 FEB 05	BGW	RPH	JTA	TH
B	ISSUE FOR INTERNAL APPROVAL	18 FEB 05	RPH	BGW	JTA	TH
A	ISSUE FOR REVIEW	23 NOV 04	BGW	LSK	JM	TH

amec

AMEC DWG NO: B-145579-34-F-0104 REV: C

NAME	DATE	COMPANY
DRAWN BY		
DESIGN AUTH		

U.S. DEPARTMENT OF ENERGY
Office of River Protection

TITLE: BULK VITRIFICATION INSTRUMENT LOOP DIAGRAM 34-T-104

SIZE	BLDG NO	INDEX NO	DWG NO	REV
B				

SCALE: N/A EDT: SHEET 1 OF 1

REF NUMBER	TITLE
F-145579-34-A-0101	PROCESS & INSTRUMENT DIAG.

REFERENCES

NEXT USED ON

MFD	REV NO	DESCRIPTION	REV BY DATE	REV BY	CHK'D BY	ENGR	COMPANY
REV REL							

REVISIONS

DOE_TB_B.DWG (01-01)

DWG NO ? | SH OF | REV

SERVICE: AWTE HOOD AIR FILTER

In making requests for transmittal of data by any electronic media, the Company receiving such data agrees that AMEC Americas Limited cannot be held responsible for users of the data outside of or beyond the scope of our original agreement. Also, because data stored in electronic media or transmitted by electronic means can deteriorate undetected or be modified without the consultant's knowledge, the Company receiving data agrees that AMEC Americas Limited cannot be held liable for the compatibility, completeness or correctness of the data.

RPP-24544 REV 1b

FIELD | MCS TERMINATION | MCS HMI

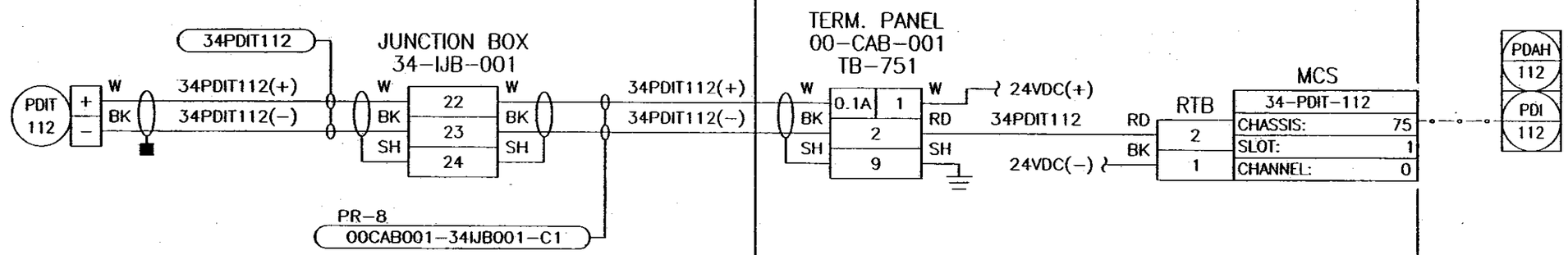

Rev.	REVISION DESCRIPTION	Date	By	Chk'd	Approved Design Lead	Approved Proj Mgr
C	ISSUE FOR CH2M HILL REVIEW & 90% REPORT	24 FEB 05	BGW	RPH	JTA	TH
B	ISSUE FOR INTERNAL APPROVAL	18 FEB 05	RPH	BGW	JTA	TH
A	ISSUE FOR REVIEW	23 NOV 04	BGW	LSK	JM	TH

amec

AMEC DWG NO B-145579-34-F-0112 REV C

NAME | DATE | COMPANY

DRAWN BY

DESIGN AUTH

U.S. DEPARTMENT OF ENERGY
Office of River Protection

TITLE
BULK VITRIFICATION
INSTRUMENT LOOP DIAGRAM
34-P-112

SIZE B | BLDG NO | INDEX NO | DWG NO | REV

SCALE N/A | EDT | SHEET 1 OF 1

DOE_TB_B.DWG (01-01)

REF NUMBER	TITLE
F-145579-34-A-0101	PROCESS & INSTRUMENT DIAG.

REFERENCES

NEXT USED ON

REV NO	DESCRIPTION	REV BY DATE	REV BY	CHK'D BY	ENGR	COMPANY

MFD | REV REL

REVISIONS

DWG NO ? | SH OF | REV

SERVICE: AWTE HOOD OUTLET AIR

In making requests for transmittal of data by any electronic media, the Company receiving such data agrees that AMEC Americas Limited cannot be held responsible for users of the data outside of or beyond the scope of our original agreement. Also, because data stored in electronic media or transmitted by electronic means can deteriorate undetected or be modified without the consultant's knowledge, the Company receiving data agrees that AMEC Americas Limited cannot be held liable for the compatibility, completeness or correctness of the data.

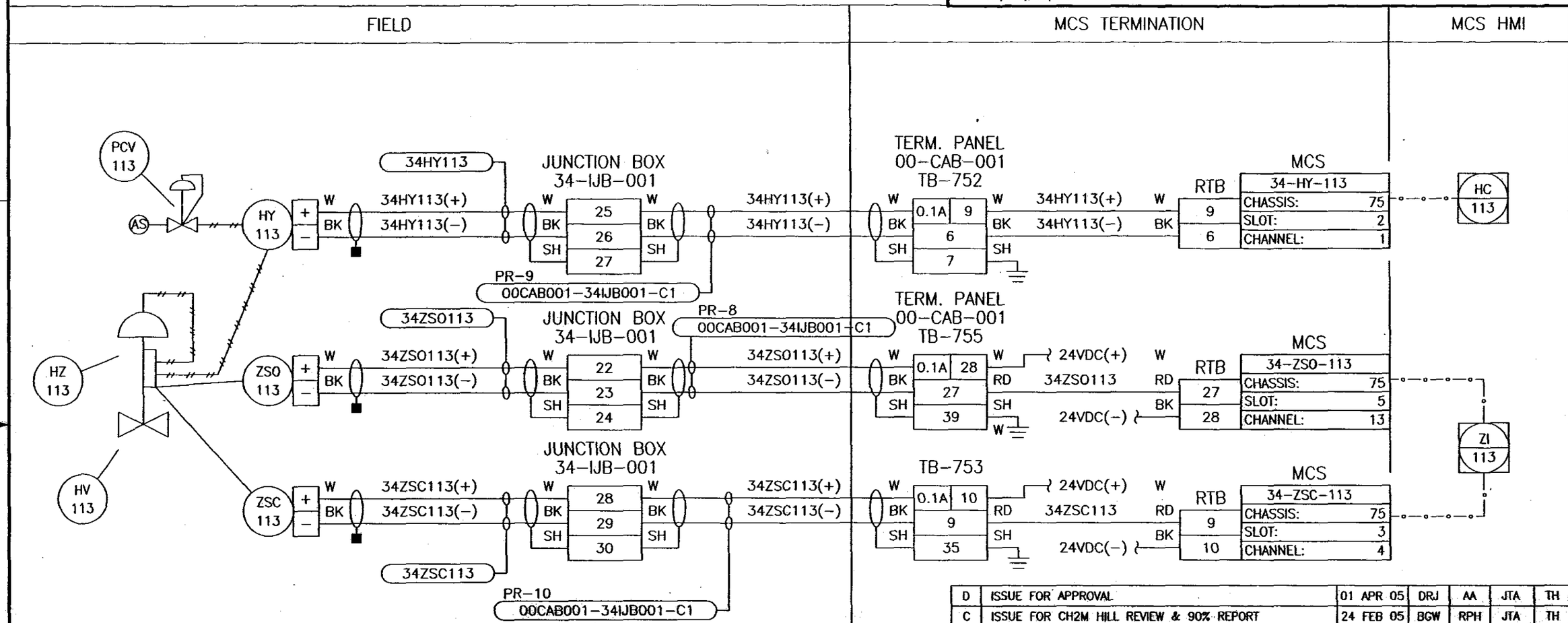

Rev.	REVISION DESCRIPTION	Date	By	Chk'd	Approved Design Lead	Approved Proj Mgr
D	ISSUE FOR APPROVAL	01 APR 05	DRJ	AA	JTA	TH
C	ISSUE FOR CH2M HILL REVIEW & 90% REPORT	24 FEB 05	BGW	RPH	JTA	TH
B	ISSUE FOR INTERNAL APPROVAL	18 FEB 05	RPH	BGW	JTA	TH
A	ISSUE FOR REVIEW	23 NOV 04	BGW	LSK	JM	TH

amec

AMEC DWG NO B−145579−34−F−0113 REV D

NAME | DATE | COMPANY

DRAWN BY

DESIGN AUTH

U.S. DEPARTMENT OF ENERGY
Office of River Protection

TITLE
BULK VITRIFICATION
INSTRUMENT LOOP DIAGRAM
34−H−113

SIZE B | BLDG NO | INDEX NO | DWG NO | REV

SCALE N/A | EDT | SHEET 1 OF 1

DOE_TB_B.DWG (01−01)

REF NUMBER	TITLE
F−145579−34−A−0101	PROCESS & INSTRUMENT DIAG.

REFERENCES

NEXT USED ON

MFD	REV NO	DESCRIPTION	REV BY DATE	REV BY	CHK'D BY	ENGR	COMPANY

REV REL

REVISIONS

DWG NO	?	SH	OF	REV

In making requests for transmittal of data by any electronic media, the Company receiving such data agrees that AMEC Americas Limited cannot be held responsible for users of the data outside of or beyond the scope of our original agreement. Also, because data stored in electronic media or transmitted by electronic means can deteriorate undetected or be modified without the consultant's knowledge, the Company receiving data agrees that AMEC Americas Limited cannot be held liable for the compatibility, completeness or correctness of the data.

SERVICE: AWTE HOOD OUTLET AIR

FIELD | MCS TERMINATION | MCS HMI

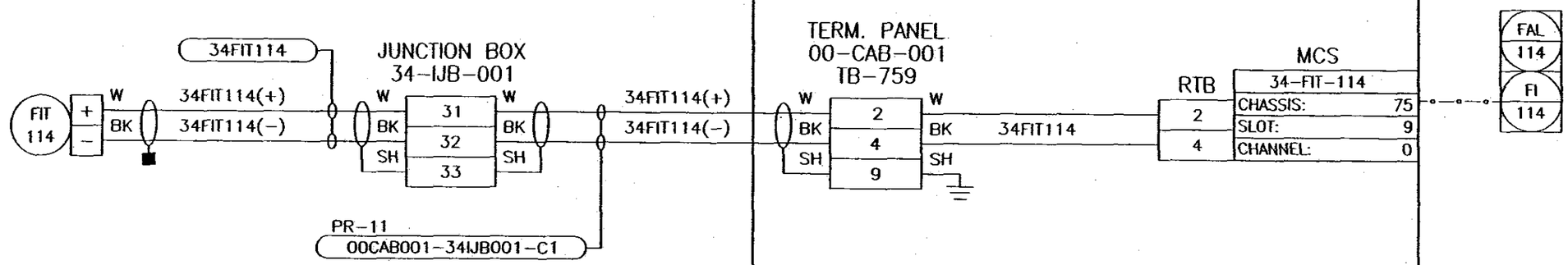

Rev.	REVISION DESCRIPTION	Date	By	Chk'd	Approved Design Lead	Approved Proj Mgr
C	ISSUE FOR CH2M HILL REVIEW & 90% REPORT	24 FEB 05	BGW	RPH	JTA	TH
B	ISSUE FOR INTERNAL APPROVAL	18 FEB 05	RPH	BGW	JTA	TH
A	ISSUE FOR REVIEW	23 NOV 04	BGW	LSK	JM	TH

amec

AMEC DWG NO: B-145579-34-F-0114 REV C

NAME | DATE | COMPANY

DRAWN BY

DESIGN AUTH

U.S. DEPARTMENT OF ENERGY
Office of River Protection

TITLE
BULK VITRIFICATION
INSTRUMENT LOOP DIAGRAM
34-F-114

SIZE	BLDG NO	INDEX NO	DWG NO	REV
B				

SCALE N/A | EDT | SHEET 1 OF 1

DOE_TB_B.DWG (01-01)

REF NUMBER	TITLE
F-145579-34-A-0101	PROCESS & INSTRUMENT DIAG.

REFERENCES

NEXT USED ON

MFD / REV REL	REV NO	DESCRIPTION	REV BY DATE	REV BY	CHK'D BY	ENGR / COMPANY

REVISIONS

RPP-24544 REV 1b

DWG NO ? | SH OF | REV

SERVICE: AWTE-TO-ICV DRAFT

In making requests for transmittal of data by any electronic media, the Company receiving such data agrees that AMEC Americas Limited cannot be held responsible for users of the data outside of or beyond the scope of our original agreement. Also, because data stored in electronic media or transmitted by electronic means can deteriorate undetected or be modified without the consultant's knowledge, the Company receiving data agrees that AMEC Americas Limited cannot be held liable for the compatibility, completeness or correctness of the data.

RPP-24544 REV 1b

FIELD | MCS TERMINATION | MCS HMI

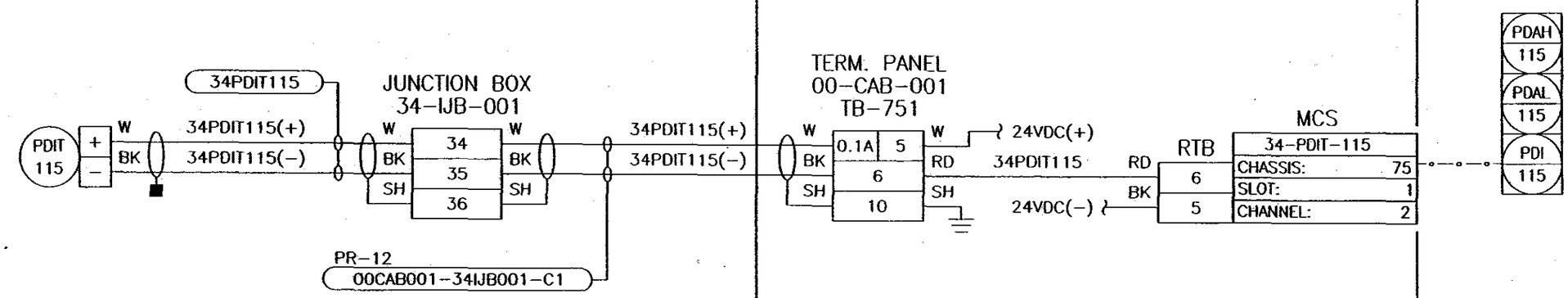

Rev.	REVISION DESCRIPTION	Date	By	Chk'd	Approved Design Lead	Approved Proj Mgr
C	ISSUE FOR CH2M HILL REVIEW & 90% REPORT	24 FEB 05	BGW	RPH	JTA	TH
B	ISSUE FOR INTERNAL APPROVAL	18 FEB 05	RPH	BGW	JTA	TH
A	ISSUE FOR REVIEW	23 NOV 04	BGW	LSK	JM	TH

amec

AMEC DWG NO B-145579-34-F-0115 REV C

	NAME	DATE	COMPANY
DRAWN BY			
DESIGN AUTH			

U.S. DEPARTMENT OF ENERGY
Office of River Protection

TITLE
BULK VITRIFICATION
INSTRUMENT LOOP DIAGRAM
34-P-115

SIZE B | BLDG NO | INDEX NO | DWG NO | REV
SCALE N/A | EDT | SHEET 1 OF 1

DOE_TB_B.DWG (01-01)

REF NUMBER	TITLE
F-145579-34-A-0101	PROCESS & INSTRUMENT DIAG.

REFERENCES

NEXT USED ON

REV REL	REV NO	DESCRIPTION	REV BY DATE	REV BY	CHK'D BY	ENGR COMPANY

REVISIONS

DWG NO	?	SH	OF	REV

SERVICE: TOS TANK NO. 1 AIRLOCK NO. 1

In making requests for transmittal of data by any electronic media, the Company receiving such data agrees that AMEC Americas Limited cannot be held responsible for uses of the data outside of or beyond the scope of our original agreement. Also, because data stored in electronic media or transmitted by electronic means can deteriorate undetected or be modified without the consultant's knowledge, the Company receiving data agrees that AMEC Americas Limited cannot be held liable for the compatibility, completeness or correctness of the data.

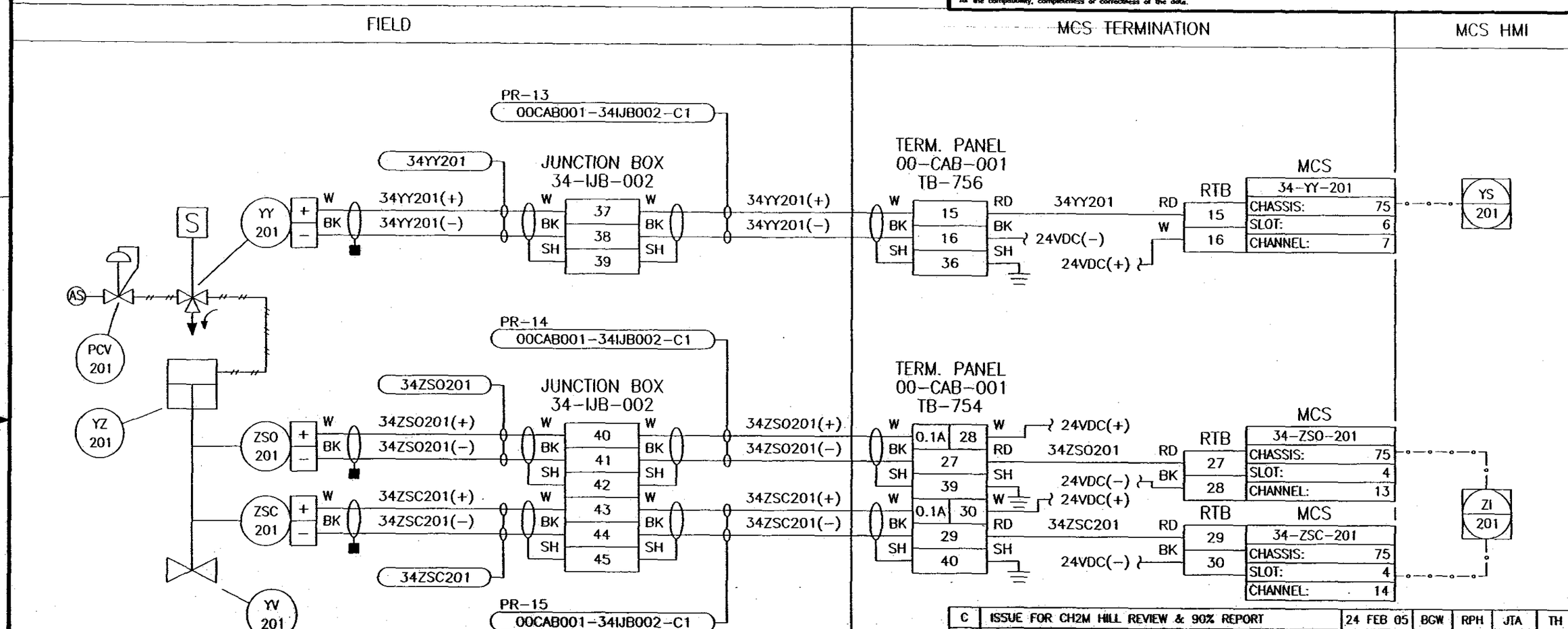

Rev.	REVISION DESCRIPTION	Date	By	Chk'd	Approved Design Lead	Approved Proj. Mgr
C	ISSUE FOR CH2M HILL REVIEW & 90% REPORT	24 FEB 05	BGW	RPH	JTA	TH
B	ISSUE FOR INTERNAL APPROVAL	18 FEB 05	RPH	BGW	JTA	TH
A	ISSUE FOR REVIEW	23 NOV 04	BGW	LSK	JM	TH

amec

AMEC DWG NO B-145579-34-F-0201 REV C

NAME	DATE	COMPANY
DRAWN BY		
DESIGN AGRH		

U.S. DEPARTMENT OF ENERGY
Office of River Protection

TITLE
BULK VITRIFICATION
INSTRUMENT LOOP DIAGRAM
34-Y-201

SIZE B | BLDG NO | INDEX NO | DWG NO | REV
SCALE N/A | EDT | SHEET 1 OF 1

REF NUMBER	TITLE
F-145579-34-A-0101	PROCESS & INSTRUMENT DIAG.

REFERENCES

NEXT USED ON

MFD	REV NO	DESCRIPTION	REV BY DATE	REV BY	CHK'D BY	ENGR	COMPANY

REVISIONS

DOE_TB_B.DWG (01-01)

DWG NO ? | SH OF | REV

SERVICE: TOS TANK NO. 1 AIRLOCK NO. 2

In making requests for transmittal of data by any electronic media, the Company receiving such data agrees that AMEC Americas Limited cannot be held responsible for users of the data outside of or beyond the scope of our original agreement. Also, because data stored in electronic media or transmitted by electronic means can deteriorate undetected or be modified without the consultant's knowledge, the Company receiving data agrees that AMEC Americas Limited cannot be held liable for the compatibility, completeness or correctness of the data.

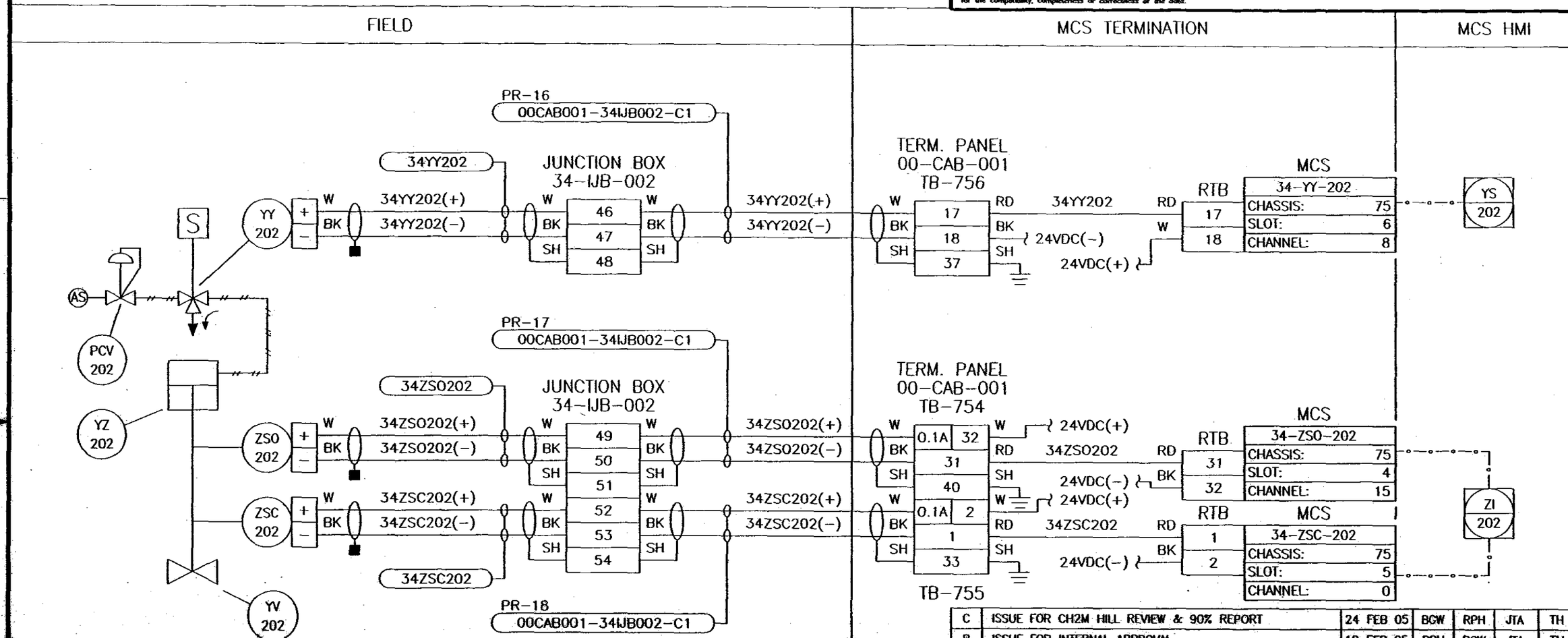

Rev.	REVISION DESCRIPTION	Date	By	Chk'd	Approved Design Lead	Approved Proj Mgr
C	ISSUE FOR CH2M HILL REVIEW & 90% REPORT	24 FEB 05	BGW	RPH	JTA	TH
B	ISSUE FOR INTERNAL APPROVAL	18 FEB 05	RPH	BGW	JTA	TH
A	ISSUE FOR REVIEW	23 NOV 04	BGW	LSK	JM	TH

amec

AMEC DWG NO B-145579-34-F-0202 REV C

NAME	DATE	COMPANY
DRAWN BY		
DESIGN AUTH		

U.S. DEPARTMENT OF ENERGY
Office of River Protection

TITLE
BULK VITRIFICATION
INSTRUMENT LOOP DIAGRAM
34-Y-202

SIZE B | BLDG NO | INDEX NO | DWG NO | REV

SCALE N/A | EDT | SHEET 1 OF 1

REF NUMBER	TITLE
F-145579-34-A-0101	PROCESS & INSTRUMENT DIAG.

REFERENCES

NEXT USED ON

MFD REV REL	REV NO	DESCRIPTION	REV BY DATE	REV BY	CHK'D BY	ENGR	COMPANY

REVISIONS

DOE_TB_B.DWG (01-01)

DWG NO ? | SH OF | REV

SERVICE: TOS TANK NO. 2 AIRLOCK NO. 1

In making requests for transmittal of data by any electronic media, the Company receiving such data agrees that AMEC Americas Limited cannot be held responsible for users of the data outside of or beyond the scope of our original agreement. Also, because data stored in electronic media or transmitted by electronic means can deteriorate undetected or be modified without the consultant's knowledge, the Company receiving data agrees that AMEC Americas Limited cannot be held liable for the compatibility, completeness or correctness of the data.

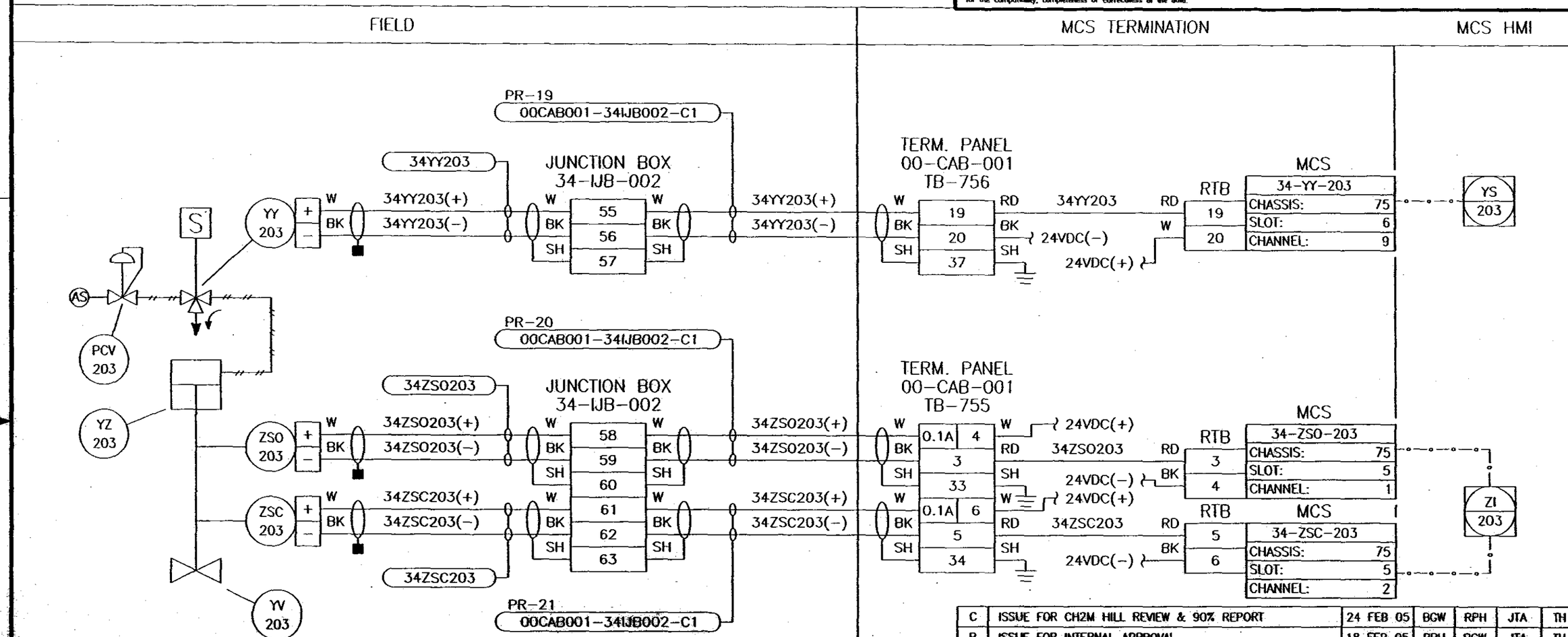

Rev.	REVISION DESCRIPTION	Date	By	Chk'd	Approved Design Lead	Approved Proj Mgr
C	ISSUE FOR CH2M HILL REVIEW & 90% REPORT	24 FEB 05	BGW	RPH	JTA	TH
B	ISSUE FOR INTERNAL APPROVAL	18 FEB 05	RPH	BGW	JTA	TH
A	ISSUE FOR REVIEW	23 NOV 04	BGW	LSK	JM	TH

amec

AMEC DWG NO B-145579-34-F-0203 REV C

	NAME	DATE / COMPANY
DRAWN BY		
DESIGN AUTH		

U.S. DEPARTMENT OF ENERGY
Office of River Protection

TITLE
BULK VITRIFICATION
INSTRUMENT LOOP DIAGRAM
34-Y-203

SIZE B | BLDG NO | INDEX NO | DWG NO | REV
SCALE N/A | EDT | SHEET 1 OF 1

REF NUMBER	TITLE
F-145579-34-A-0101	PROCESS & INSTRUMENT DIAG.

REFERENCES

NEXT USED ON

REV REL	MFD	REV NO	DESCRIPTION	REV BY DATE	REV BY	CHK'D BY	ENGR	COMPANY

REVISIONS

DOE_TB_B.DWG (01-01)

DWG NO	SH	REV
?	OF	

In making requests for transmittal of data by any electronic media, the Company receiving such data agrees that AMEC Americas Limited cannot be held responsible for users of the data outside of or beyond the scope of our original agreement. Also, because data stored in electronic media or transmitted by electronic means can deteriorate undetected or be modified without the consultant's knowledge, the Company receiving data agrees that AMEC Americas Limited cannot be held liable for the compatibility, completeness or correctness of the data.

SERVICE: TOS TANK NO. 2 AIRLOCK NO. 2

FIELD | MCS TERMINATION | MCS HMI

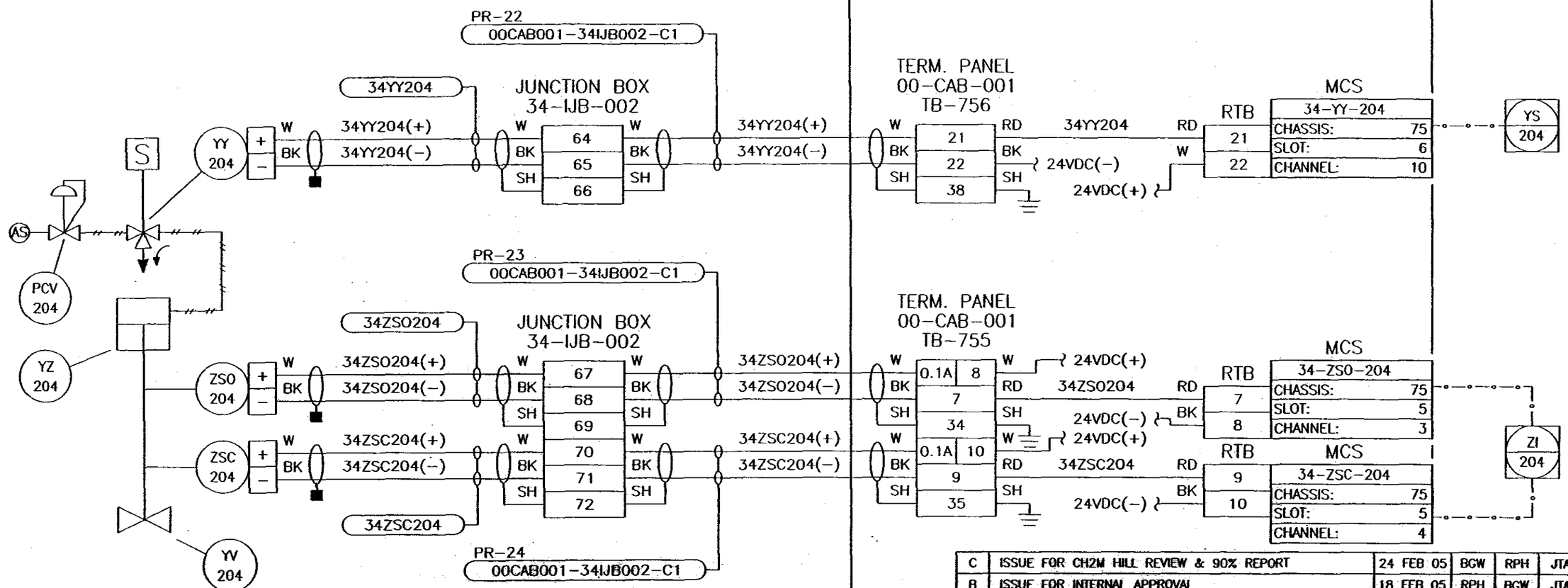

Rev.	REVISION DESCRIPTION	Date	By	Chk'd	Approved Design Lead	Approved Proj Mgr
C	ISSUE FOR CH2M HILL REVIEW & 90% REPORT	24 FEB 05	BGW	RPH	JTA	TH
B	ISSUE FOR INTERNAL APPROVAL	18 FEB 05	RPH	BGW	JTA	TH
A	ISSUE FOR REVIEW	23 NOV 04	BGW	LSK	JM	TH

amec

AMEC DWG NO: B-145579-34-F-0204 REV: C

NAME	DATE	COMPANY
DRAWN BY		
DESIGN AUTH		

U.S. DEPARTMENT OF ENERGY
Office of River Protection

TITLE: BULK VITRIFICATION INSTRUMENT LOOP DIAGRAM 34-Y-204

SIZE: B | BLDG NO | INDEX NO | DWG NO | REV

SCALE: N/A | EDT | SHEET 1 OF 1

REF NUMBER	TITLE
F-145579-34-A-0101	PROCESS & INSTRUMENT DIAG.

REFERENCES

NEXT USED ON

MFD REV REL	REV NO	DESCRIPTION	REV BY DATE	REV BY	CHK'D BY	ENGR COMPANY

REVISIONS

DOE_TB_B.DWG (01-01)

DWG NO	?	SH	OF	REV

In making requests for transmittal of data by any electronic media, the Company receiving such data agrees that AMEC Americas Limited cannot be held responsible for users of the data outside of or beyond the scope of our original agreement. Also, because data stored in electronic media or transmitted by electronic means can deteriorate undetected or be modified without the consultant's knowledge, the Company receiving data agrees that AMEC Americas Limited cannot be held liable for the compatibility, completeness or correctness of the data.

SERVICE: TOS TANK NO. 3 AIRLOCK NO. 1

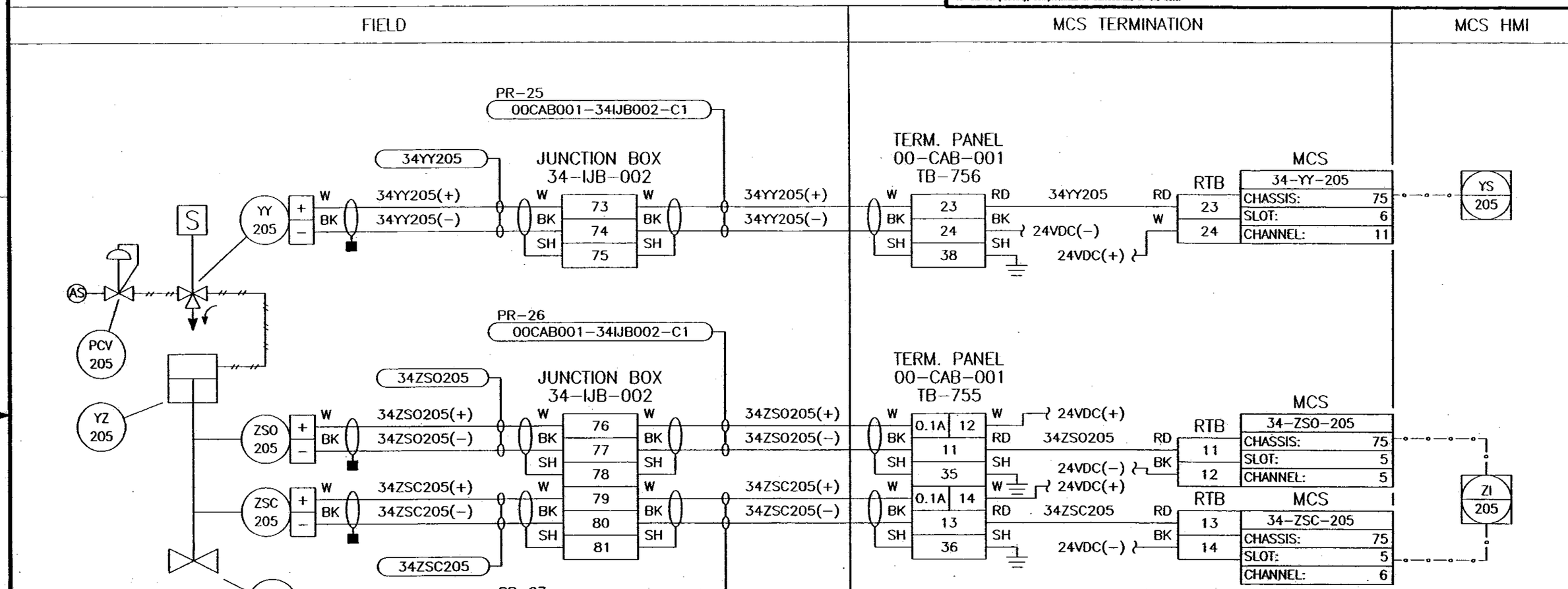

Rev.	REVISION DESCRIPTION	Date	By	Chk'd	Approved Design Lead	Approved Proj Mgr
C	ISSUE FOR CH2M HILL REVIEW & 90% REPORT	24 FEB 05	BGW	RPH	JTA	TH
B	ISSUE FOR INTERNAL APPROVAL	18 FEB 05	RPH	BGW	JTA	TH
A	ISSUE FOR REVIEW	23 NOV 04	BGW	LSK	JM	TH

amec

AMEC DWG NO: B-145579-34-F-0205 REV: C

NAME	DATE	COMPANY
DRAWN BY		
DESIGN AUTH		

U.S. DEPARTMENT OF ENERGY
Office of River Protection

TITLE: BULK VITRIFICATION INSTRUMENT LOOP DIAGRAM 34-Y-205

SIZE: B | BLDG NO | INDEX NO | DWG NO | REV

SCALE: N/A | EDT | SHEET 1 OF 1

DOE_TB_B.DWG (01-01)

REF NUMBER	TITLE
F-145579-34-A-0101	PROCESS & INSTRUMENT DIAG.

REFERENCES

NEXT USED ON

MFD	REV NO	DESCRIPTION	REV BY DATE	REV BY	CHK'D BY	ENGR	COMPANY

REVISIONS

DWG NO	?	SH	OF	REV

In making requests for transmittal of data by any electronic media, the Company receiving such data agrees that AMEC Americas Limited cannot be held responsible for users of the data outside of or beyond the scope of our original agreement. Also, because data stored in electronic media or transmitted by electronic means can deteriorate undetected or be modified without the consultant's knowledge, the Company receiving data agrees that AMEC Americas Limited cannot be held liable for the compatibility, completeness or correctness of the data.

SERVICE: TOS TANK NO. 3 AIRLOCK NO. 2

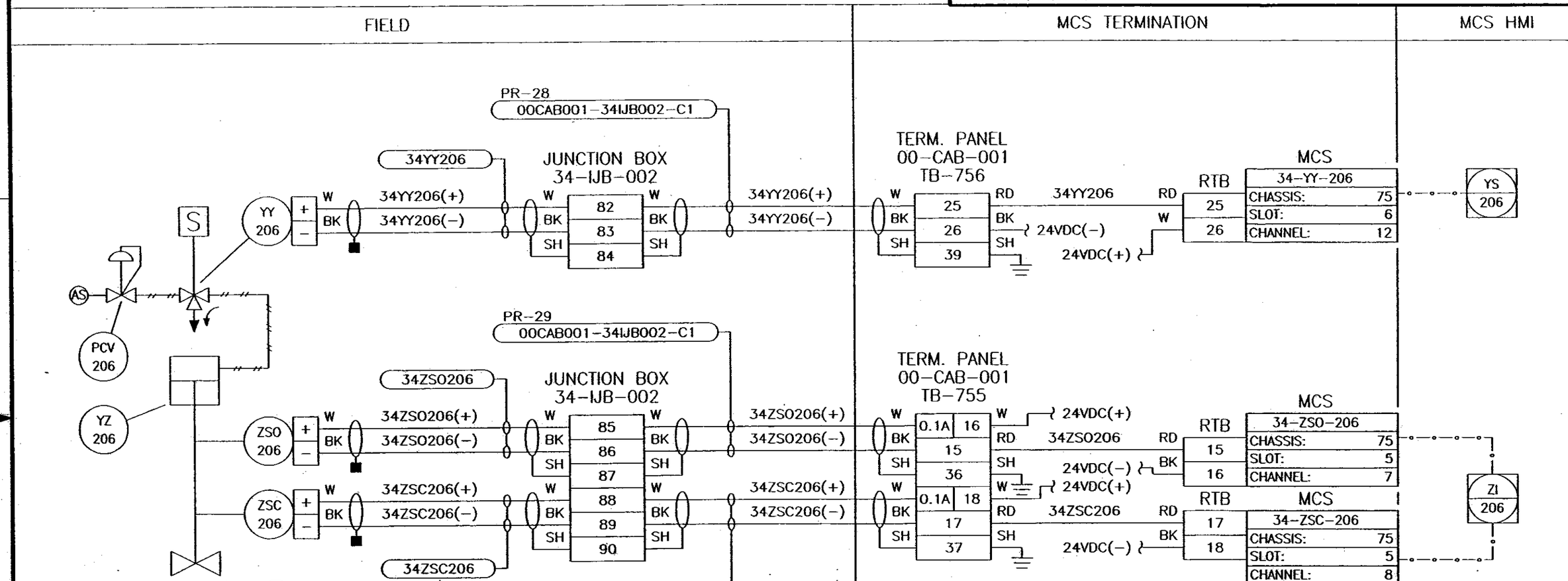

Rev.	REVISION DESCRIPTION	Date	By	Chk'd	Approved Design Lead	Approved Proj Mgr
C	ISSUE FOR CH2M HILL REVIEW & 90% REPORT	24 FEB 05	BGW	RPH	JTA	TH
B	ISSUE FOR INTERNAL APPROVAL	18 FEB 05	RPH	BGW	JTA	TH
A	ISSUE FOR REVIEW	23 NOV 04	BGW	LSK	JM	TH

amec

AMEC DWG NO: B-145579-34-F-0206 REV: C

NAME / DATE / COMPANY — DRAWN BY — DESIGN AUTH

U.S. DEPARTMENT OF ENERGY
Office of River Protection

TITLE: BULK VITRIFICATION INSTRUMENT LOOP DIAGRAM 34-Y-206

SIZE: B | BLDG NO | INDEX NO | DWG NO | REV
SCALE: N/A | EDT | SHEET 1 OF 1

REF NUMBER	TITLE
F-145579-34-A-0101	PROCESS & INSTRUMENT DIAG.

REFERENCES — NEXT USED ON

REV REL	MFD	REV NO	DESCRIPTION	REV BY DATE	REV BY	CHK'D BY	ENGR	COMPANY

REVISIONS

DOE_TB_B.DWG (01-01)

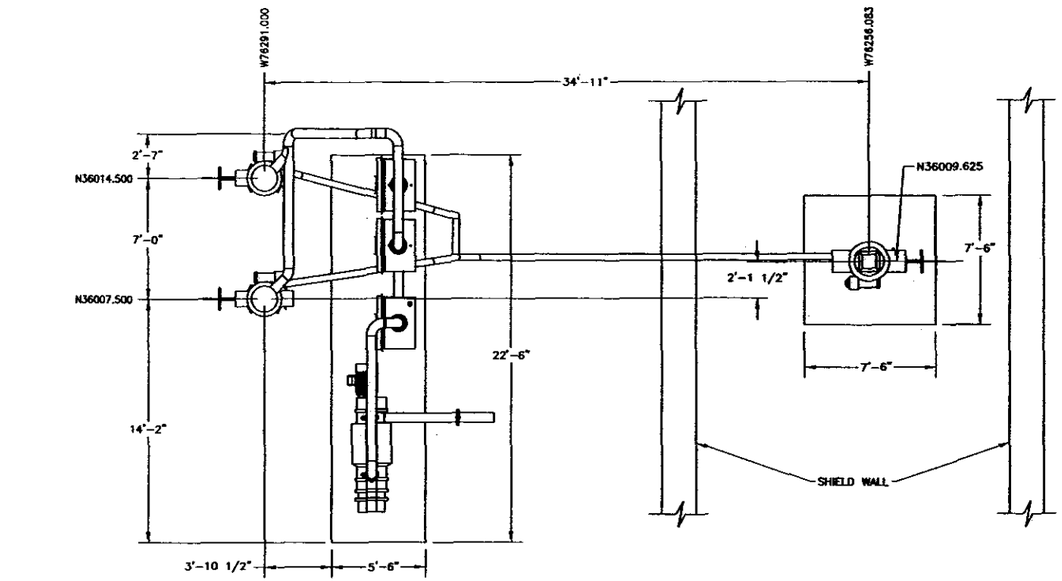

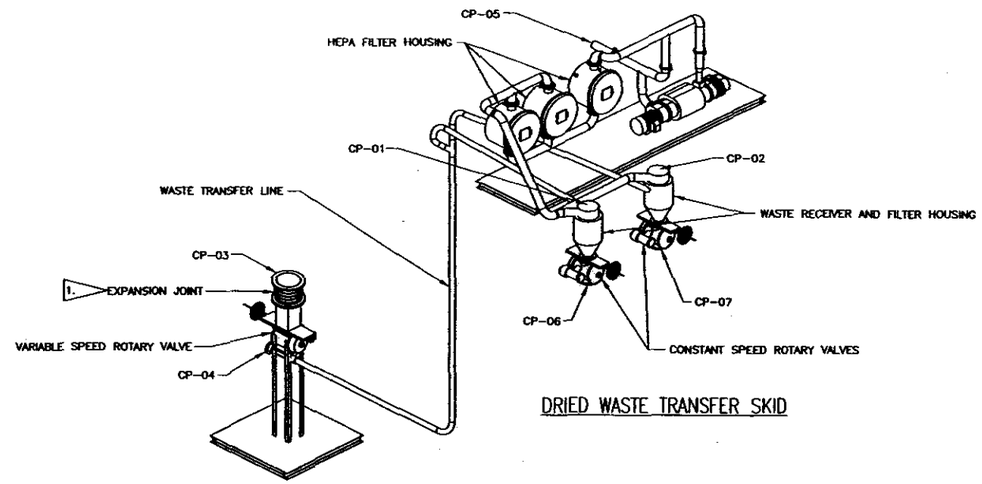

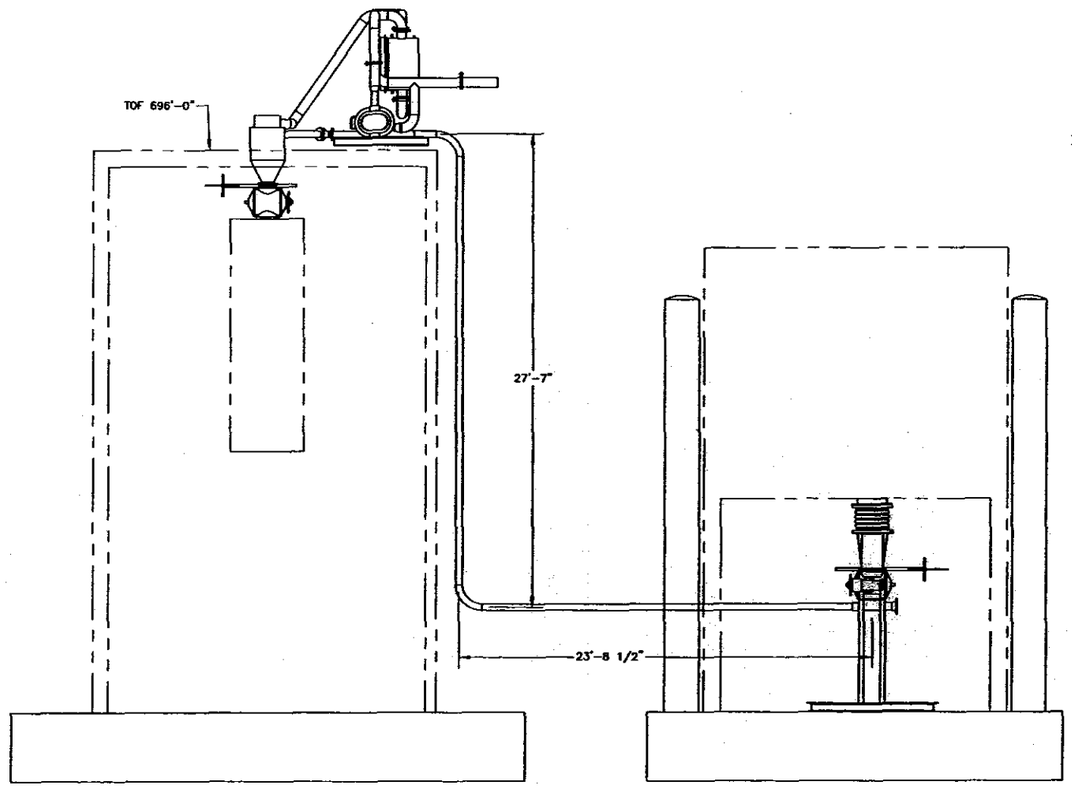

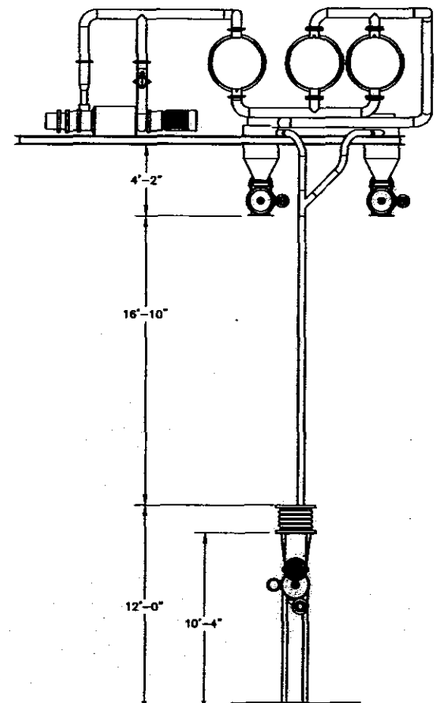

NOTES:

1. EXPANSION JOINT TO BE PROVIDED BY BUYER AND FIELD INSTALLED.

NOT APPROVED FOR CONSTRUCTION

DMJM Technology

REV	DESCRIPTION
E	ADDED ADDITIONAL DESIGN DATA
D	ENGINEERING COMMENT
C	ENGINEERING COMMENT
B	RELEASED FOR CLIENT REVIEW
A	RELEASED FOR REVIEW

REVISIONS

DWG NO	TITLE
DRAWING TRACEABILITY LIST	

REF NUMBER	TITLE
REFERENCES	
NEXT USED ON END ITEM	

amec

NAME

145579–FINAL DBVS DESIGN

U.S. DEPARTMENT OF ENERGY
Office of River Protection

BULK VITRIFICATION
DRIED WASTE TRANSFER
SYSTEM

SIZE	SCH NO	CODE NO	DWG NO	REV
F	241C	7100	DBVS–SK–M107	E

SCALE NONE

SHEET 1 OF 3

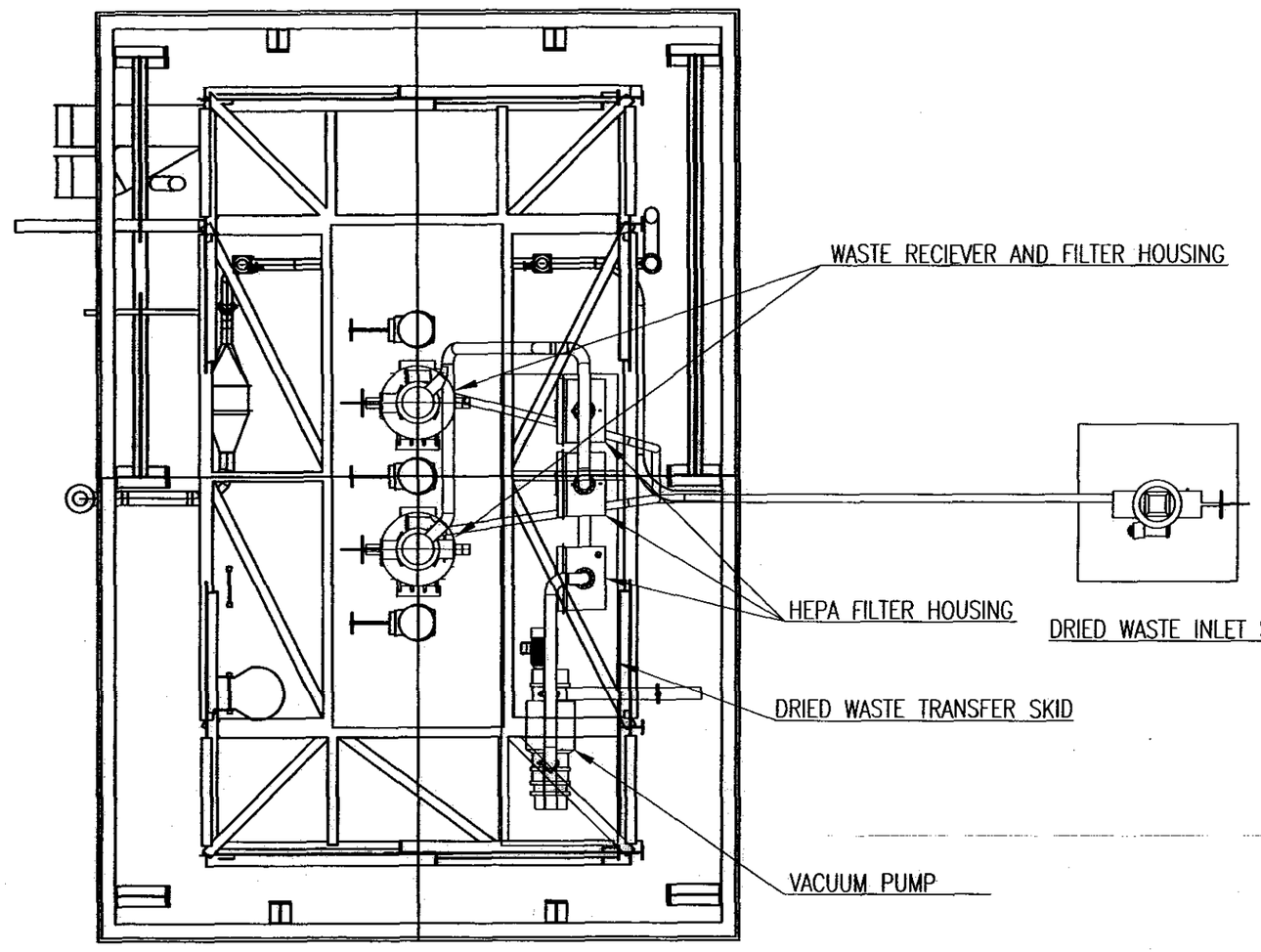

PLAN @ ELEV. 696'-0"

NOTE:

1. PLAN VIEW REFERENCED FROM AMEC DRAWING F-145579-00-D-D-0051.

NOT APPROVED FOR CONSTRUCTION

DMJM Technology

amec

NAME	DATE
DRAWN BY	
CHECKED BY	
ENGINEER	
PROJECT / FIELD ENG	
CONSTRUCTION ENGINEER	
PROJECT ENGINEER	
DESIGN APPROVAL	

145579-FINAL DBVS DESIGN

U.S. DEPARTMENT OF ENERGY
Office of River Protection

BULK VITRIFICATION
DRIED WASTE TRANSFER
SYSTEM PLAN

SIZE	SCALE NO	WBS NO	DWG NO	REV
F	241G	7100	DBVS-SK-M107	C

SCALE 3/8"=1' SHEET 2 OF

REV	DESCRIPTION	DATE	DRAWN BY	CHECKED BY	ENGINEER	PROJ ENG	CONSTR ENG	PROJ ENGINEER	DESIGN APPROVAL
C	REVISED WASTE TRANS PIPING								
B	ENGINEERING COMMENT								
A	RELEASED FOR REVIEW								

REVISIONS

DWG NO	TITLE

DRAWING TRACEABILITY LIST

REF NUMBER	TITLE

REFERENCES

NEXT USED ON END ITEM

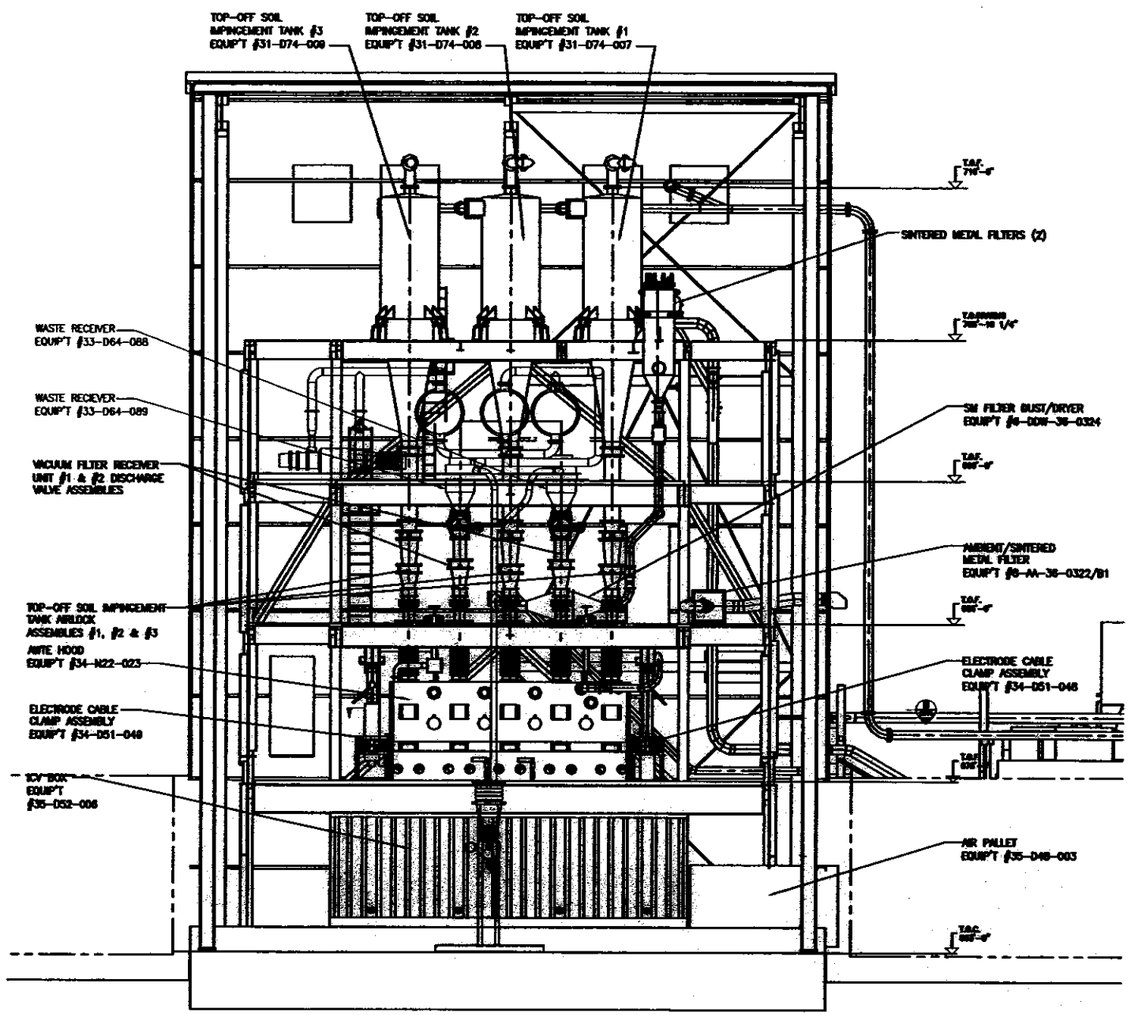

ELEVATION LOOKING WEST

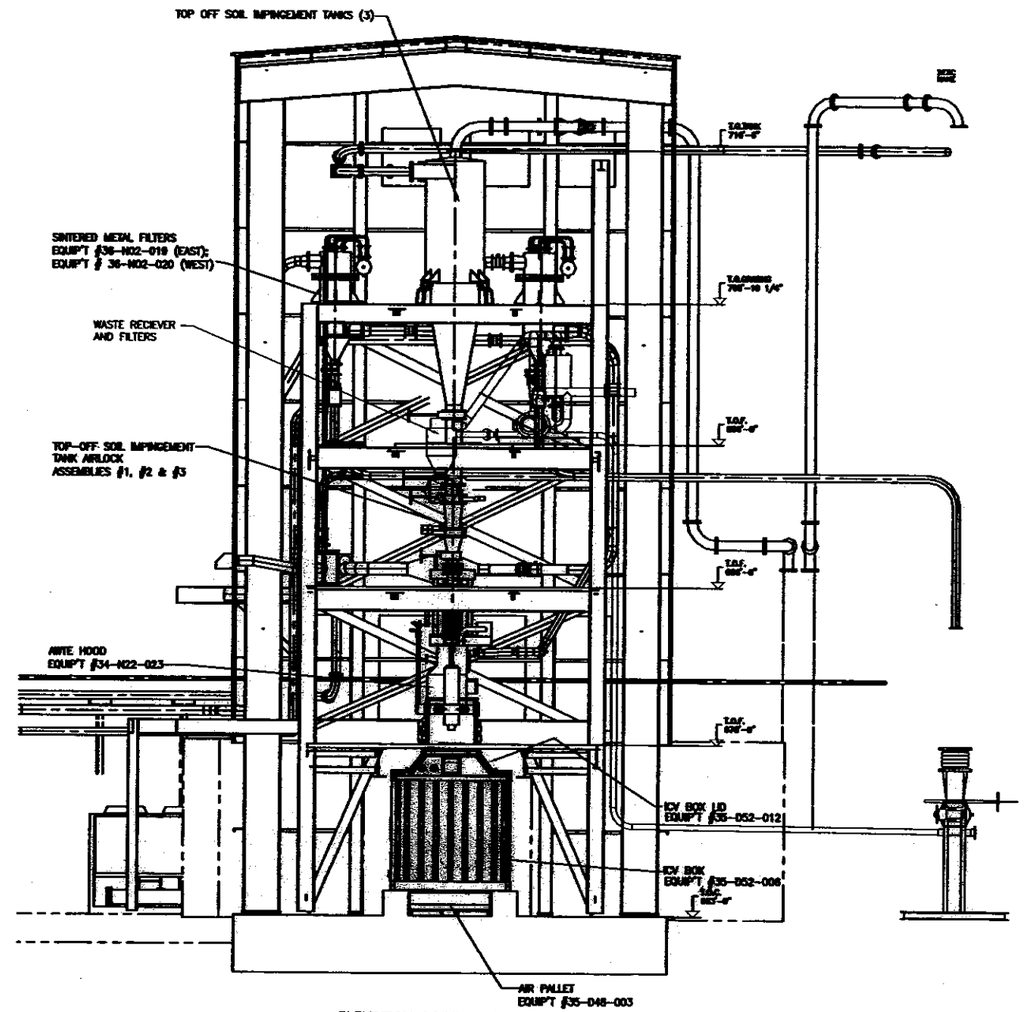

ELEVATION LOOKING NORTH

NOTE:

1. ELEVATION VIEWS REFERENCED FROM AMEC DRAWING F-145579-00-0-D-0041.

NOT APPROVED FOR CONSTRUCTION

DMJM Technology

C	REVISED WASTE TRANS PIPING	
B	ENGINEERING COMMENT	
A	RELEASED FOR REVIEW	

REVISIONS

DRAWING TRACEABILITY LIST: DWG NO | TITLE

REFERENCES: REF NUMBER | TITLE

NEXT USED ON END ITEM

amec

NAME

145579-FINAL DBVS DESIGN

U.S. DEPARTMENT OF ENERGY
Office of River Protection

BULK VITRIFICATION
DRIED WASTE TRANSFER
SYSTEM ELEVATIONS

SIZE	SCALE	PAGE	DWG NO	REV
F	241G	7100	DBVS-SK-M107	C

SCALE 1/4"=1'

In making requests for transmittal of data by any electronic media, the Company receiving such data agrees that AMEC Americas Limited cannot be held responsible for users of the data outside of or beyond the scope of our original agreement. Also, because data stored in electronic media or transmitted by electronic means can deteriorate undetected or be modified without the consultant's knowledge, the Company receiving data agrees that AMEC Americas Limited cannot be held liable for the compatibility, completeness or correctness of the data.

STRUCTURAL STEEL:

1. INTRODUCTION:

THE BASIS OF THESE NOTES IS THE AMERICAN INSTITUTE OF STEEL CONSTRUCTION "SPECIFICATION FOR STRUCTURAL STEEL BUILDINGS – ALLOWABLE STRESS DESIGN AND PLASTIC DESIGN", JUNE 1, 1989 AND SUPPLEMENT NO.1, DEC 17, 2001. IT IS THE INTENT OF THESE NOTES TO CONFORM TO THE REQUIREMENTS OF THIS DOCUMENT AS A MINIMUM STANDARD. HOWEVER, DUE TO THE TYPES OF STRUCTURES AND THE NATURE OF THE LOADINGS INVOLVED, SOME ASPECTS OF THESE NOTES ARE BASED ON OTHER CODES, PUBLICATIONS AND TECHNICAL PAPERS. THE CODES, STANDARDS AND OTHER DOCUMENTS ARE LISTED BELOW.

PROPOSED CONNECTION DETAILS, FABRICATION, QUALITY CONTROL AND INSPECTION PROCEDURES SHALL BE SUBMITTED TO THE ENGINEER FOR REVIEW AND APPROVAL PRIOR TO COMMENCEMENT OF DETAILING. DETAILS OR PROCEDURES NOT INCLUDED IN THESE NOTES OR PROPOSED CHANGES TO THE DETAIL MUST BE CLEARLY INDICATED AS SUCH AND MUST BE SUBMITTED IMMEDIATELY AFTER AWARD OF CONTRACT TO ALLOW ADEQUATE TIME FOR REVIEW BY THE ENGINEER.

ALL SUBMITTALS MUST BE STAMPED WITH A WASHINGTON REGISTERED PROFESSIONAL ENGINEER'S STAMP.

THE FOLLOWING DEFINITIONS ARE USED IN THE SPECIFICATION:

CONTRACTOR: THE CONSTRUCTION CONTRACTOR
ENGINEER: AMEC
FABRICATOR: THE CONTRACTOR FABRICATING THE STRUCTURAL STEEL
ERECTOR: THE CONTRACTOR ERECTING THE STRUCTURAL STEEL
INSPECTOR: WELDING INSPECTOR CERTIFIED IN ACCORDANCE WITH ANSI/AWS D1.1-2002

THE NOMENCLATURE USED IN THESE NOTES IS THE SAME AS IN AISC "MANUAL OF STEEL CONSTRUCTION, ALLOWABLE STRESS DESIGN – 9TH EDITION, 1989", UNLESS NOTED OTHERWISE.

IN THE EVENT OF A DISCREPANCY BETWEEN THE DRAWINGS AND THESE NOTES THE DRAWINGS WILL TAKE PRECEDENCE.

ALL FORCES INDICATED ON THE DRAWINGS AND IN THESE NOTES ARE SERVICE LOADS, UNLESS NOTED OTHERWISE.

2. CODES, STANDARDS AND OTHER DOCUMENTS:

2.1 ALL WORK SHALL CONFORM TO THE REQUIREMENTS OF THE FOLLOWING CODES AND STANDARDS, UNLESS SPECIFICALLY STATED OTHERWISE.
- AISC SPECIFICATION FOR STRUCTURAL STEEL BUILDINGS, "ALLOWABLE STRESS DESIGN AND PLASTIC DESIGN", JUNE 1, 1989 AND SUPPLEMENT NO.1, DEC 17, 2001.
- AISC CODE OF STANDARD PRACTICE FOR STEEL BUILDINGS AND BRIDGES, 2000.
- AMERICAN WELDING SOCIETY – ANSI/AWS D1.1-2002, "STRUCTURAL WELDING CODE – STEEL".

2.2 IN ADDITION TO THE GENERAL REQUIREMENTS OF 2.1 ABOVE, THE FOLLOWING DOCUMENTS ARE REFERRED TO, OR PROVIDE SOURCES OF DATA:
- AISC "MANUAL OF STEEL CONSTRUCTION – ALLOWABLE STRESS DESIGN" – 9th EDITION, 1989.
- AISC "MANUAL OF STEEL CONSTRUCTION – VOLUME II CONNECTIONS" – ASD/LRFD-1992.
- AISC "MANUAL OF STEEL CONSTRUCTION – LOAD AND RESISTANCE FACTOR DESIGN" – 1st EDITION 1986.
- ASTM A325-89 "SPECIFICATION FOR HIGH STRENGTH BOLTS, FOR STRUCTURAL STEEL JOINTS".
- ASTM A36/A36M-89 "SPECIFICATION FOR STRUCTURAL STEEL".
- ASTM A992/A992M-04a "STANDARD SPECIFICATION FOR STRUCTURAL STEEL SHAPES" 01-SEPT-2004
- ASTM-A500-84 "COLD FORMED WELDED AND SEAMLESS CARBON STEEL STRUCTURAL TUBING IN ROUNDS AND SHAPES".
- AISC "ENGINEERING FOR STEEL CONSTRUCTION" 1984.
- AISC "RESEARCH COUNCIL ON STRUCTURAL CONNECTIONS (RCSC) SPECIFICATION FOR STRUCTURAL JOINTS USING ASTM A325 OR A490 BOLTS".

2.3 ANY DISCREPANCIES BETWEEN VARIOUS CODES AND STANDARDS SHALL BE REFERRED TO THE ENGINEER FOR CLARIFICATION.

3. MATERIALS:

3.1 STRUCTURAL SHAPES:

3.1.1 ALL STEEL SHALL CONFORM TO THE FOLLOWING DESIGNATIONS, UNLESS NOTED OTHERWISE ON THE DRAWINGS:

- PLATES AND BARS	- ASTM-A36 - MINIMUM YIELD STRESS = 36ksi
- STRUCTURAL SHAPES	- ASTM-A992/A992M-04a - MINIMUM YIELD STRESS = 50ksi
- HSS ROUND	- ASTM-A500C - MINIMUM YIELD STRESS = 46ksi
- HSS SQUARE & RECTANGULAR	- ASTM-A500C - MINIMUM YIELD STRESS = 50ksi
- STANDARD PIPE	- ASTM-A53B - MINIMUM YIELD STRESS = 35ksi
- CHANNELS & ANGLES	- ASTM-A36 - MINIMUM YIELD STRESS = 36ksi

3.1.2 IF THE FABRICATOR PROPOSES TO SUBSTITUTE MATERIAL OTHER THAN THAT SPECIFIED ABOVE OR AS SPECIFIED ON THE DRAWINGS, HE SHALL FURNISH THE ENGINEER WITH THE SPECIFICATIONS OF THE STEEL WHICH HE PROPOSES TO USE AND THE NAME OF THE MILL AT WHICH THE MATERIAL WAS MANUFACTURED. WRITTEN APPROVAL FROM THE ENGINEER MUST BE RECEIVED BEFORE MAKING THE SUBSTITUTION.

3.1.3 THE FABRICATOR SHALL SUPPLY THE ENGINEER WITH MILL TEST CERTIFICATES FOR ALL STRUCTURAL STEEL REQUIRED FOR THE WORK PRIOR TO START OF FABRICATION.

3.2 BOLTS:

3.2.1 BOLT ASSEMBLIES CONSISTING OF A BOLT, NUT AND HARDENED WASHER SHALL CONFORM TO DESIGNATION ASTM A325, UNLESS SPECIFICALLY NOTED OTHERWISE. PROPRIETARY BOLTS WHICH FEATURE A TWIST-OFF ELEMENT MANUFACTURED BY LE JEUNE BOLT CO. MAY BE UTILIZED.

3.2.2 UNLESS NOTED OTHERWISE ON THE DRAWINGS, BOLT ASSEMBLIES CONFORMING TO ASTM A325 SHALL BE MECHANICALLY GALVANIZED PER ASTM F436 CLASS 50, TYPE 1.

3.2.3 ALL BOLTS SUPPLIED MUST BE INSPECTED TO ENSURE THAT THEY HAVE PROPER IDENTIFICATION AND MARKS AS TO THEIR MEETING THE REQUIRED GRADE AND ASTM SPECIFICATIONS. FASTENERS SHALL CONFORM TO TFC-ESHQ-Q-C-C-003 REV. B. – CONTROL OF SUSPECT COUNTERFEIT ITEMS.

3.3 WELD ELECTRODES:

3.3.1 ELECTRODES SHALL BE BASIC E70XX SERIES AND SHALL CONFORM TO ANSI/AWS D1.1 – 2002.

3.3.2 ELECTRODES FOR WIRE FEED (FLUX-CORED) PROCESS SHALL BE E70T-4.

3.3.3 ELECTRODES FOR FIELD WELDED MOMENT CONNECTIONS SHALL BE E70XX WITH A MINIMUM CVN TOUGHNESS OF 20 ft-lbs @ -20°F.

3.4 SHOP PAINTING:

3.4.1 ALL STEEL SHALL BE COMMERCIAL BLAST-CLEANED TO SSPC-6 AND PROVIDED WITH SINGLE COAT OF AMERON AMERLOCK 400 PRIMER AND TWO COATS OF AMERON AMERCOAT 450HS OR APPROVED EQUALS. APPROVALS FOR ALTERNATE MUST BE MADE BY PURCHASER IN WRITING. COLOUR TO BE AMERON CR-3 "PEARL GRAY". UNDERSIDES OF BASE PLATES SHALL BE PAINTED.

3.4.2 BOLTS, THREADED RODS, NUTS AND WASHERS SHALL BE SUPPLIED BLACK BY FABRICATOR, TO BE INSTALLED AND FIELD PAINTED BY ERECTOR.

4. WELDING:

4.1 WELDING SHALL BE IN ACCORDANCE WITH AMERICAN WELDING SOCIETY PUBLICATION ANSI/AWS D1.1

4.2 UNLESS OTHERWISE STATED ON THE DRAWINGS, WELDING IS TO CONFORM TO THE REQUIREMENTS OF ANSI/AWS D1.1 SECTION 8 "STATICALLY LOADED STRUCTURES". WHERE A STRUCTURE OR PORTION OF A STRUCTURE IS SUBJECT TO DYNAMIC LOADING, IT WILL BE SO INDICATED ON THE DRAWINGS AND SECTION 9 OF ANSI/AWS D1.1 "DYNAMICALLY LOADED STRUCTURES" WILL APPLY.

4.3 ALL WELDING, WHETHER IN THE SHOP OR IN THE FIELD, SHALL BE PERFORMED BY WELDERS QUALIFIED IN ACCORDANCE WITH SECTION 5, PART C, D, & E OF ANSI/AWS D1.1.

4.4 THE FABRICATOR/ERECTOR SHALL SUBMIT TWO COPIES OF THE PROPOSED WELDING PROCEDURE TO THE ENGINEER FOR REVIEW PRIOR TO SENDING ANY DETAIL DRAWINGS FOR REVIEW. REVIEW BY THE ENGINEER OF THE WELDING PROCEDURES PROPOSED BY THE FABRICATOR/ERECTOR SHALL NOT RELIEVE THE FABRICATOR/ERECTOR OF THE RESPONSIBILITY FOR ALL WELDS MEETING THE CODE REQUIREMENTS.

4.5 SPLICING OF MEMBERS WILL NOT BE PERMITTED WITHOUT THE PRIOR APPROVAL OF THE ENGINEER AND THEN ONLY AFTER APPROVAL OF SPLICING PROCEDURES.

4.6 ALL WELDED CONNECTIONS AND ASSEMBLIES FOR STRUCTURAL STEEL IN WET, HUMID OR OTHER CORROSIVE ENVIRONMENTS SHALL BE SEAL WELDED. STRUCTURES TO BE SEAL WELDED WILL BE IDENTIFIED ON THE DRAWINGS.

5. WELDING INSPECTION:

5.1 THE FABRICATOR/ERECTOR SHALL BE RESPONSIBLE FOR INSPECTION OF WELDING AND SHALL PAY PARTICULAR ATTENTION TO SECTION 6 OF ANSI/AWS D1.1 ENTITLED INSPECTION, INCLUDING PARAGRAPH 6.6 OBLIGATIONS OF THE CONTRACTOR. THE INSPECTION REQUIREMENTS APPLY TO BOTH SHOP AND FIELD WELDS.

5.2 ALL INSPECTION SHALL BE PERFORMED BY AWS CERTIFIED INSPECTORS. THE INSPECTION PROCEDURE SHALL BE AS OUTLINED IN 5.7 BELOW.

5.3 THE FABRICATOR/ERECTOR SHALL SUBMIT TO THE ENGINEER FOR REVIEW AND APPROVAL A COPY OF THE QUALITY CONTROL AND ASSURANCE STANDARDS OUTLINING SHOP PROCEDURES TO BE USED TO MAINTAIN GOOD WELDING QUALITY.

5.4 NON-DESTRUCTIVE TESTING SHALL BE RADIOGRAPHIC OR ULTRASONIC, WHICHEVER METHOD IS MOST SUITABLE FOR THE TYPE OF WELD BEING TESTED.

5.4.1 RADIOGRAPHIC INSPECTIONS SHALL CONFORM TO ASTM E94; ULTRASONIC TO ASTM E164.

5.5 COPIES OF ALL SHOP AND FIELD INSPECTION AND TEST REPORTS SHALL BE SUBMITTED WEEKLY BY THE INSPECTOR TO THE ENGINEER.

5.6 THE CONTRACTOR RESERVES THE RIGHT TO CARRY OUT INDEPENDENT INSPECTION AT HIS OWN EXPENSE AS OUTLINED IN CLAUSE 5.8 BELOW.

5.7 INSPECTION PROCEDURE – FABRICATOR'S/ERECTOR'S RESPONSIBILITIES:

5.7.1 ALL INSPECTION AND TESTING IN SECTION 5.7 SHALL BE AT THE FABRICATOR'S/ ERECTOR'S EXPENSE.

5.7.2 VISUAL INSPECTION:

5.7.2.1 ALL WELDS SHALL BE VISUALLY INSPECTED BY THE INSPECTOR. WHERE WELDS DO NOT MEET THE QUALITY REQUIREMENTS AS SPECIFIED IN PARAGRAPHS 8.15 OR 9.25 "QUALITY OF WELDS" IN THE ANSI/AWS D1.1 CODE, THE FABRICATOR SHALL CORRECT ALL DEFICIENCIES AT HIS OWN EXPENSE.

5.7.2.2 WHERE VISUAL INSPECTION INDICATES AN UNSATISFACTORY STANDARD OF WELDING, i.e., 2% OF WELDING REJECTED, NON-DESTRUCTIVE TESTING OF WELDS SELECTED BY THE INSPECTOR SHALL BE CARRIED OUT.

5.7.3 NON-DESTRUCTIVE TESTING:

5.7.3.1 IF, AS A RESULT OF THE NON-DESTRUCTIVE TEST REQUIRED AS A RESULT OF VISUAL INSPECTION, THE NUMBER OF FAULTY WELDS IS:
A) LESS THAN 2% OF THE WELDS TESTED, FURTHER NON-DESTRUCTIVE TESTING MAY NOT BE REQUIRED.
B) GREATER THAN OR EQUAL TO 2% BUT LESS THAN 50% OF THE WELDS TESTED, FURTHER TESTING WILL BE REQUIRED OF 10% OF THE WELDING.
C) GREATER THAN OR EQUAL TO 50% OF THE WELDS TESTED, THEN ALL WELDING SHALL BE TESTED.

5.7.3.2 IN ADDITION TO ANY NON-DESTRUCTIVE TESTING REQUIRED AS A RESULT OF VISUAL INSPECTION, NON-DESTRUCTIVE TESTING SHALL BE PERFORMED AS FOLLOWS:

WELD DESCRIPTION	% OF WELDS TO BE TESTED
A) FULL PENETRATION WELDS IN MATERIAL > 5/8" THICK	5%
B) FILLET WELDS > 1/2" THICK	5%
C) MAJOR WELDED MOMENT CONNECTIONS IN MOMENT RESISTING FRAMES	100%
D) TRUSS CHORD AND COLUMNS SPLICES	100%
E) BEAM SPLICES (SEE CLAUSE 4.5)	100%

5.7.4 TESTING AT CRITICAL LOCATIONS SUCH AS MOMENT CONNECTIONS SHALL BE PERFORMED TO ENSURE THAT THE MATERIAL IS FREE FROM LAMINATIONS.

5.7.5 ALL DEFICIENCIES IDENTIFIED BY NON-DESTRUCTIVE TESTING SHALL BE CORRECTED BY THE FABRICATOR AT HIS OWN EXPENSE.

5.8 INSPECTION PROCEDURE – CONTRACTOR'S INSPECTION:

5.8.1 IN ADDITION TO THE ABOVE INSPECTION REQUIREMENTS TO BE CARRIED OUT BY THE FABRICATOR/ERECTOR, THE CONTRACTOR SHALL RESERVE THE RIGHT, WITH HIS OWN REPRESENTATIVES OR BY EMPLOYING INDEPENDENT INSPECTORS, TO INSPECT AND TEST SHOP AND FIELD WELDING PROCEDURES AND QUALITY. THIS CONTRACTOR'S PREROGATIVE SHALL NOT RELIEVE THE FABRICATOR FROM THE RESPONSIBILITY FOR INSPECTION.

5.8.2 THE INSPECTION AND TESTING OF THE FABRICATOR'S/ERECTOR'S WORK BY THE CONTRACTOR'S INSPECTOR WILL BE CARRIED OUT AT THE CONTRACTOR'S EXPENSE. HOWEVER, ANY DEFICIENCIES IDENTIFIED DURING THE INSPECTION SHALL BE CORRECTED BY THE FABRICATOR AT HIS OWN EXPENSE.

6. CONNECTIONS:

6.1 GENERAL:

6.1.1 FIELD CONNECTIONS SHOULD BE BOLTED WHENEVER POSSIBLE. FIELD WELDING SHOULD BE AVOIDED EXCEPT AS SPECIFIED ON THE DRAWINGS FOR SPECIAL CONDITIONS SUCH AS MOMENT CONNECTIONS.

6.1.2 THE DESIGN OF THE CONNECTIONS SHALL BE THE RESPONSIBILITY OF THE FABRICATOR WITH THE EXCEPTION OF THE SEISMIC FORCE RESISTING SYSTEM OF THE VERTICAL BRACING, BEAM, COLUMN CONNECTIONS, WHICH ARE SHOWN ON DWGS 0013, 0014, 0026 & 0027. ALL CONNECTIONS SHALL BE IN ACCORDANCE WITH THE BASIC REQUIREMENTS OF THE AISC "SPECIFICATION FOR STRUCTURAL STEEL BUILDINGS" AND THE MINIMUM REQUIREMENTS FOR HEAVY INDUSTRIAL STRUCTURES AS SPECIFIED HEREIN, AND LATEST OSHA REQUIREMENTS ON DETAILS TO SUIT ERECTABILITY.

6.1.3 HIGH STRENGTH BOLTS ARE TO BE DESIGNED ON THE BASIS OF BEARING TYPE BOLTS WITH THREADS INCLUDED IN THE SHEAR PLANE EXCEPT WHERE SHOWN OTHERWISE IN THESE NOTES, ON THE DRAWINGS OR APPROVED BY THE ENGINEER.

6.2 STANDARD BEAM CONNECTIONS:

6.2.1 ALL BEAM CONNECTIONS ARE TO BE TYPE A, B OR C AS SHOWN IN TABLE 1-1 OF THESE NOTES, UNLESS PHYSICAL CIRCUMSTANCES REQUIRE A NON-STANDARD CONNECTION.

6.2.2 THE MINIMUM REQUIRED NUMBER OF BOLT ROWS, REGARDLESS OF BOLT DIAMETER, MUST BE PROVIDED FOR EACH BEAM SIZE AS SHOWN IN THE TABLE UNLESS OTHERWISE NOTED ON THE DRAWINGS. MINIMUM BOLT SIZE IS TO BE 3/4"ø.

6.2.3 THE MINIMUM SHEAR CAPACITY OF THE CONNECTION FOR EVERY BEAM IS GIVEN IN TABLE 1-2. THE MAXIMUM SHEAR CAPACITY OF THE CONNECTION IS THE DESIGN CAPACITY THAT CORRESPONDS TO THE MAXIMUM NUMBER OF BOLT ROWS THAT CAN FIT BETWEEN THE BEAM FLANGES AND SATISFIES THE REQUIREMENTS OF AISC SPECIFICATION FOR STRUCTURAL STEEL FOR BUILDINGS.

6.2.4 WHEREVER IT IS REQUIRED TO CONNECT FOR A REACTION GREATER THAN THE CAPACITY OF THE MINIMUM CONNECTION, THE REACTION WILL BE INDICATED ON THE DRAWING. THE FABRICATOR SHALL DESIGN A SUITABLE CONNECTION, SUBJECT TO THE APPROVAL OF THE ENGINEER, TO ACCOMMODATE THIS REACTION.

6.2.5 WHERE IT IS NECESSARY TO COPE BEAM FLANGES, THE CAPACITY OF THE COPED CONNECTION MUST BE CHECKED BY THE FABRICATOR AND REINFORCING PROVIDED WHERE REQUIRED TO MAINTAIN THE MINIMUM CONNECTION CAPACITY.

6.2.6 APPROVED CHECKING PROCEDURE FOR COPED BEAMS IS OUTLINED IN APPENDIX B OF "AISC MANUAL OF STEEL CONSTRUCTION – VOLUME II CONNECTIONS".

6.2.7 COPE REINFORCING, IF REQUIRED, SHALL BE AS PROVIDED AS DESCRIBED IN AISC PUBLICATION "ENGINEERING FOR STEEL CONSTRUCTION", 1984.

6.2.8 ALL CONNECTIONS DESIGNED BY THE FABRICATOR SHALL SATISFY EDGE DISTANCE, BOLT SPACING AND MINIMUM PLATE THICKNESS SHOWN IN TABLE 1-1 AND SHALL BE CHECKED FOR BOLT BEARING, BLOCK SHEAR RESISTANCE AS REQUIRED BY AISC SPECIFICATION FOR STRUCTURAL STEEL BUILDINGS.

6.2.9 SINGLE ANGLE, OR OTHER ONE SIDED CONNECTIONS, ARE NOT GENERALLY PERMITTED IN PRIMARY STRUCTURES. HOWEVER, THEY MAY BE USED IN SECONDARY PLATFORMS AND OTHER LIGHT FRAMING, WITH THE APPROVAL OF THE ENGINEER.

6.3 OTHER BEAM CONNECTIONS:

6.3.1 FIGURES 1-2, 1-3, 1-8, 1-9 AND 1-10 SHOW SOME TYPICAL CONNECTION CONFIGURATIONS FOR PASS-THROUGH AND VERTICAL BRACING LOADS ADDITIONAL TO MINIMUM BEAM SHEAR REQUIREMENTS. THESE CONNECTIONS SHOULD BE USED WHEREVER WARRANTED BY THE LOADING CONDITIONS. CONSIDERATION SHOULD BE GIVEN TO CONNECTION ECONOMY AND EASE OF ERECTION. IT IS OF PRIME IMPORTANCE THAT OVERALL SIZE OF THE CONNECTION BE KEPT TO A MINIMUM FOR AESTHETIC REASONS, AND TO AVOID INTERFERENCES WITH DOORWAYS, PIPING AND MECHANICAL EQUIPMENT.

6.3.2 GENERALLY 3/4"ø BOLTS WILL BE USED. WHERE WARRANTED BY THE LOADS SPECIFIED ON THE DRAWINGS, 1"ø BOLTS MAY BE USED.

6.3.3 IF THE DOUBLE ANGLES OR END PLATES USED IN THE STANDARD BEAM CONNECTIONS SHOWN IN TABLE 1-1 ARE INCREASED FROM 5/16" TO 3/8" THICK, THE CONNECTION IS CAPABLE OF CARRYING 4 kips PER BOLT ROW IN TENSION TOGETHER WITH THE SHEAR CAPACITY OF THE BOLT ROW (MAXIMUM BOLT GAUGE 5", MINIMUM EDGE AND END DISTANCES AS SPECIFIED).

6.3.5 MOMENT CONNECTIONS SHALL BE DESIGNED AND DETAILED IN ACCORDANCE WITH THE PROCEDURES RECOMMENDED IN AISC "MANUAL OF STEEL CONSTRUCTION – 9th EDITION" AND AISC "MANUAL OF STEEL CONSTRUCTION – VOLUME II CONNECTIONS".

6.4 BRACING CONNECTIONS:

6.4.1 THE FORCES FOR WHICH THE BRACING CONNECTION IS TO BE DESIGNED WILL BE SHOWN ON THE DRAWINGS ADJACENT TO THE MEMBER.

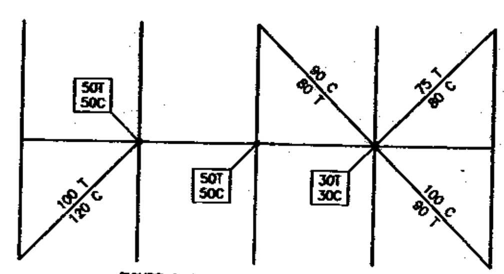

FIGURE 1-1 BRACING LOAD DESIGNATION

NOTES FOR FIGURE 1-1:

1. THE LOADS WILL BE SHOWN ON THE DRAWINGS AS INDICATED ON THE DIAGRAM BELOW LEFT.
2. DELETED (NOT APPLICABLE)
3. THE LOAD WITHIN BRACKETS IS THE LOAD FOR WHICH THE CONNECTION IS TO BE DESIGNED.

   THE LOAD WITH NO BRACKETS IS THE LOAD IN THE BRACE DETERMINED BY THE STRUCTURAL ANALYSIS AND IS GIVEN FOR REFERENCE ONLY, WHEN IT DIFFERS FROM THE LOAD WITHIN BRACKET.

   CONNECTION DESIGN TO MEET NET AREA REQUIREMENT SPECIFIED ON NBC 1997, 2214.6.3.2.

   VERTICAL BRACING WITHIN ONE PANEL TO HAVE SAME LOADING, UNO.
4. THE LOAD IN THE BOX IS THE LOAD TO BE PASSED THROUGH THE CONNECTION ON ONE SIDE OF THE COLUMN, THROUGH THE COLUMN TO THE CONNECTION ON THE OTHER SIDE.
5. THE FABRICATOR (DESIGNER OF THE CONNECTION) WILL CHOOSE A SUITABLE CONNECTION TYPE TO RESIST THE FORCES AS OUTLINED IN SECTION 6.5.1.
6. T = TENSION C = COMPRESSION
7. HORIZONTAL BRACING WILL BE TREATED SIMILARLY.

6.4.2 FORCES LESS THAN 9 KIPS ARE CONSIDERED NOMINAL AND MAY NOT BE MARKED ON THE DRAWINGS. IN THESE CASES THE CONNECTION SHALL HAVE THE MINIMUM NUMBER OF BOLTS IN ACCORDANCE WITH 6.4.4 BELOW.

6.4.3 BOLTS IN BRACING CONNECTIONS SHALL NORMALLY BE DESIGNED AS BEARING TYPE WITH THREADS INCLUDED IN THE SHEAR PLANE UNLESS NOTED OTHERWISE ON THE DRAWINGS OR APPROVED BY THE ENGINEER. HOWEVER, IN CONNECTIONS WITH LARGE LOADS REQUIRING CONNECTED PARTS GREATER THAN 3/4" THICKNESS, AND IN ORDER TO MINIMIZE THE SIZE OF THE CONNECTION, 1"ø OR LARGER BOLTS WITH THREADS EXCLUDED FROM THE SHEAR PLANE MAY BE USED WITH THE ENGINEER'S APPROVAL.

6.4.4 UNLESS NOTED ON THE DRAWINGS, THE MINIMUM NUMBER OF BOLTS FOR BRACING MEMBER END CONNECTIONS SHALL BE AS FOLLOWS:

MEMBER	NUMBER OF BOLTS WHEN LOAD IN BRACE IS < 9 kips	9 kips OR MORE
SINGLE ANGLE	2	3
TEE	2	4

6.4.5 WHEREVER POSSIBLE THE WORK POINT ELEVATION FOR THE BRACING SHALL BE AT THE COLUMN CENTERLINE AND 7" BELOW NOMINAL TOP OF STEEL ELEVATION UNLESS OTHERWISE NOTED ON THE DRAWINGS. THIS IS BASED ON AN ASSUMED AVERAGE BEAM DEPTH IN THE RANGE OF 10" TO 18". WHERE THIS WORK POINT LOCATION IS NOT PRACTICAL, ALTERNATIVE LOCATIONS MAY BE PERMITTED, BUT SHOULD BE GENERALLY AT COLUMN CENTERLINE AND AT OR NEAR THE BEAM CENTERLINE. AS FAR AS POSSIBLE, THE WORK POINT ELEVATIONS SHOULD BE CONSTANT ACROSS THE WIDTH OF THE BUILDING.

6.5 BEAM CONNECTIONS SUBJECTED TO BRACING COMPONENT LOADING AND/OR PASS-THROUGH LOADING:

6.5.1 A) ALL BEAM CONNECTIONS SHALL RESIST THE SUM OF:
- THE VERTICAL COMPONENTS OF ALL CONNECTED BRACING MEMBERS, AND/OR
- THE HORIZONTAL PASS-THROUGH FORCES, AND
- THE MINIMUM SHEAR CAPACITY OF THE CONNECTION (PER TABLE 1-2) MULTIPLIED BY A REDUCTION FACTOR AS STATED IN B) BELOW.

B) UNLESS OTHERWISE STATED ON THE DRAWINGS, THE REDUCTION FACTOR TO BE USED IN A) APPLIED TO THE MINIMUM SHEAR CAPACITY OF THE CONNECTION (SEE TABLE 1-2), SHALL BE 0.75.

C) IN CONNECTIONS SUBJECT TO
BEAM REACTION LOADS PLUS VERTICAL BRACING COMPONENTS BUT NO PASS-THROUGH FORCES OR
- BEAM REACTION LOADS PLUS PASS-THROUGH FORCES BUT NO VERTICAL BRACING COMPONENTS,
THE REDUCTION FACTOR OF B) SHALL STILL APPLY.

D) IN NO CASE SHALL THE SHEAR CAPACITY OF THE TOTAL CONNECTION BE LESS THAN THE MINIMUM SHEAR CAPACITY OF THE BEAM, PER TABLE 1-2.

6.5.2 THE METHOD USED FOR INDICATING THE FORCES ACTING AT A CONNECTION IS DESCRIBED IN FIGURE 1-1.

6.5.3 CONNECTIONS SHALL BE DESIGNED IN ACCORDANCE WITH THE UNIFORM FORCE METHOD FOR HEAVY BRACING CONNECTIONS AS OUTLINED IN THE AISC "MANUAL OF STEEL CONSTRUCTION – VOLUME II CONNECTIONS".

7. GENERAL:

7.1 ALL BEAM ELEVATIONS INDICATE TOP OF BEAM FLANGE AT THE CENTERLINE OF THE BEAM OR TOP OF FLANGE AT BACK OF CHANNEL, UNLESS NOTED OTHERWISE. WHERE A TEE MEMBER IS INDICATED AS POSITIONED WITH THE WEB HORIZONTAL, THE ELEVATION SHOWN INDICATES THE CENTERLINE OF THE WEB.

7.2 WHERE FIELD REVISIONS ARE REQUIRED, FIELD WELDING WILL BE PERMITTED ONLY WITH THE APPROVAL OF THE ENGINEER.

7.3 EXCEPT FOR FULLY WELDED CONNECTIONS, LOAD TRANSFER AT JOINTS OR SPLICES IN A COLUMN SHALL BE BY BEARING CONTACT OF MILLED SURFACES (A MILLED SURFACE IS INTENDED TO INCLUDE SURFACES WHICH HAVE BEEN ACCURATELY SAWN OR FINISHED TO A TRUE PLANE BY ANY SUITABLE MEANS). STANDARD SPLICES, IN ACCORDANCE WITH TABLES D1 TO D6 IN "ENGINEERING FOR STEEL CONSTRUCTION," SHALL BE USED UNLESS LOADS SHOWN ON THE DRAWINGS REQUIRE LARGER CONNECTIONS.

7.4 WHERE A COLUMN SPLICE IS SUBJECT TO A BENDING MOMENT, (AS IN A MOMENT FRAME) THE COLUMNS SHALL BE BUTT WELDED TOGETHER. THE WELDS ARE TO DEVELOP THE FULL STRENGTH OF THE SMALLER SECTION.

7.5 LOAD TRANSFER FROM COLUMN TO BASE PLATE SHALL BE BY BEARING OF CONTACT SURFACES. ALL COLUMN-TO-BASE PLATE CONNECTIONS SHALL BE WELDED ALL AROUND USING MINIMUM WELD PER DRAWING.

7.6 DELETE (NOT APPLICABLE)

7.7 COLUMN BASE PLATES SHALL BE LEVELLED USING SHIMS IN SUFFICIENT QUANTITY AND SIZE TO PREVENT OVERSTRESSING OF BASE PLATES, ANCHOR BOLTS AND/OR PEDESTALS. ALL SHIMS SHALL BE SUPPLIED BY THE FABRICATOR.

7.8 ALL FLOOR BRACING IS GENERALLY TO BE LOCATED 4" BELOW TOS, UNLESS NOTED OTHERWISE.

7.9 TOLERANCES SHALL BE GENERALLY IN ACCORDANCE WITH AISC CODE OF STANDARD PRACTICE FOR STEEL BUILDINGS AND BRIDGES.

7.10 CONNECTION OF PERIMETER BEAMS TO COLUMNS SHALL BE BASED ON THE MORE SEVERE CONDITION DICTATED BY EITHER THE HORIZONTAL FLOOR BRACING FORCES (SHOWN ON PLANS) OR THE VERTICAL BRACING FORCES (SHOWN ON ELEVATIONS).

7.11 ALL FORCES SHOWN ON DRAWINGS ARE IN kips.

8. ERECTION:

8.1 THE ERECTABILITY OF THE STEEL IS THE FABRICATOR'S RESPONSIBILITY, REGARDLESS OF THE ENGINEER-REVIEWED DETAIL DRAWINGS.

8.2 ALL STEEL ERECTION AND FIELD PAINTING SHALL FULLY COMPLY WITH CONSTRUCTION SPECIFICATION 145579-Q-SP-001.

8.3 ALL HIGH-STRENGTH BOLTS SHALL BE PRETENSIONED IN ACCORDANCE WITH THE RCSC SPECIFICATION FOR STRUCTURAL JOINTS, SECTION 8(D)(2), CALIBRATED WRENCH TIGHTENING. PROPRIETARY BOLTS WHICH FEATURE A TWIST-OFF ELEMENT AS MANUFACTURED BY LE JEUNE BOLT COMPANY SHALL BE ACCEPTABLE AND SHALL BE INSTALLED ACCORDING TO SECTION 8(D)(3). INSTALLATION OF ALTERNATE DESIGN BOLTS, OF THE RCSC SPECIFICATION.

8.4 SHIM OR FILLER PLATES MAY BE USED, WITH THE APPROVAL OF THE ENGINEER, WITH DEEP CONNECTIONS FRAMING INTO COLUMN WEBS TO FACILITATE ERECTION. FILLER PLATES MUST BE COATED IN ACCORDANCE WITH PROJECT COATING SPECIFICATIONS, IN PROJECT CONSTRUCTION SPECIFICATION 145579-Q-SP-001 SECTION 09900.

8.5 BASE PLATE AND SHEAR KEY POCKET GROUTING SHALL CONFORM TO THE CONSTRUCTION SPECIFICATION 145579-Q-SP-001 SECTION 3300.

8.6 ERECTION SEQUENCE AND ERECTIBILITY PLAN TO INCLUDE NECESSITIES OF EQUIPMENT INSTALLATIONS. EQUIPMENT LAYOUT DRAWINGS TO BE CONSIDERED TOGETHER WITH STRUCTURAL STEEL DETAIL DRAWINGS.

9. FIELD PAINTING:

9.1 THE ERECTOR WILL BE RESPONSIBLE FOR FIELD TOUCH-UP COATING. FIELD TOUCH-UP COATING MUST PROVIDE AN UNBROKEN COATING FILM EQUIVALENT TO THE ORIGINAL COATING IN ACCORDANCE WITH THE PROJECT COATING SPECIFICATION IN CONSTRUCTION SPECIFICATION 145579-Q-SP-001 SECTION 09900.

9.2 ALL EXPOSED FASTENERS SHALL BE FIELD PAINTED AFTER BOLT TORQUING COMPLETE.

9.3 IF SHOP-TORQUED BOLTS ARE LOOSENED IN THE FIELD, THE BROKEN COATING SEAL SHALL BE TOUCHED UP IMMEDIATELY AFTER ERECTION.

10. WEIGHTS:

10.1 WEIGHTS SHALL BE CALCULATED AS SPECIFIED IN AISC "CODE OF STANDARD PRACTICE FOR STEEL BUILDINGS AND BRIDGES – 1992".

Rev.	REVISION DESCRIPTION	Date	By	Chk'd		
K	ISSUED FOR CH2M HILL APPROVAL & 90% REPORT	07 OCT 05	JC		PM	FWS
J	ISSUED FOR CH2M HILL APPROVAL & 90% REPORT	22 APR 05	LG		PM	TH
H	UPDATED WELD REFERENCES – ISSUED FOR 90% REPORT	8 APR 05	LG		PM	TH
G	UPDATED WELD REFERENCES – ISSUED FOR 90% REPORT	28 FEB 05	DPK		PM	TH
F	ISSUED FOR REVISION & 90% REPORT	18 FEB 05	DPK		PM	TH
E	ISSUED FOR CH2M HILL APPROVAL & 90% REPORT	15 FEB 05	LG		PM	TH
D	ISSUED FOR CH2M HILL APPROVAL & 90% REPORT	31 JAN 05	LG		PM	TH
C	ISSUED FOR CH2M HILL REVIEW	07 DEC 04	LG		PM	TH
B	ISSUED FOR INTERNAL APPROVAL	25 NOV 04	LG		PM	JDS
A	ISSUED FOR INTERNAL REVIEW	29 OCT 04	LG		PM	JDS

DWG NO	TITLE	REF NUMBER	TITLE
DRAWING TRACEABILITY LIST		REFERENCES	
		NEXT USED ON	

REVISIONS

F-145579-00-B-0001 REV K

amec

NAME: Lucio Grova

145579-FINAL DBVS DESIGN

U.S. DEPARTMENT OF ENERGY
Office of River Protection

BULK VITRIFICATION
STRUCTURAL STEEL
GENERAL NOTES – SH 1

F

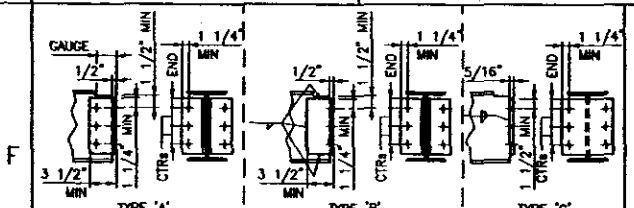

TYPE 'A' DOUBLE CLIP ANGLES SHOP BOLTED

TYPE 'B' DOUBLE CLIP ANGLES SHOP WELDED

TYPE 'C' END PLATE SHOP WELDED

W SECTION	MINIMUM REQUIRED NUMBER OF BOLT ROWS	MAXIMUM POSSIBLE NUMBER OF BOLT ROWS	MINIMUM WELD SIZE FOR TYPE 'B' CONNECTIONS (inches)	MINIMUM WELD SIZE FOR TYPE 'C' CONNECTIONS (inches)
W8	2	2	3/16	1/4
W10	2	2	3/16	1/4
W12	3	3	3/16	1/4
W14	3	3	3/16	1/4
W16	4	4	3/16	1/4
W18	4	5	1/4	1/4
W21	5	6	1/4	1/4
W24	6	7	1/4	1/4
W27	7	8	1/4	1/4
W30	8	9	1/4	1/4
W33	9	10	1/4	
W36	10	11	1/4	

NOTES:

1. THIS TABLE IS BASED ON THE USE OF 3/4"ø BOLTS AT 3" SPACING.
2. REGARDLESS OF THE SIZE OF BOLT USED, THE MINIMUM NUMBER OF ROWS SHOWN ABOVE MUST BE PROVIDED.
3. EDGE DISTANCES SHOWN ARE MINIMUM FOR 3/4"ø BOLTS.
4. TYPE 'A' CONNECTIONS PROVIDE THE MINIMUM REQUIRED CAPACITY FOR ALL NON-STANDARD CONNECTIONS.
5. TYPE 'C' CONNECTIONS ARE NOT PERMITTED FOR BEAMS LARGER THAN W30.

TABLE 1-1 STANDARD BEAM CONNECTIONS - MINIMUM REQUIREMENTS

W SECTIONS	MINIMUM END SHEAR CAPACITY BASED ON TYPE A CONNECTION (kips)	W SECTIONS	MINIMUM END SHEAR CAPACITY BASED ON TYPE A CONNECTION (kips)
W8x 13,15,18,21,24	21	W21x44	78
28,31,35	27	50	84
40,48	34	57,62	89
		68	93
		73	93
		83	93
W10x15,17,19,22,26	21	W24x55	104
30,33,39	28	62,68	111
45,49,54,60,68	32	76	111
		84	111
		94	111
W12x16	25	W27x84	130
19,22,26,30	26	94	130
35,40	34	102	130
45,50,53,58	39		
65	45		
72,79	50		
W14x22,26,30	26	W30x99	148
34,38,43	33		
48	39		
53,61	43		
68,74,82	48		
W16x26,31	45	W33x118	167
36,40	53		
45	62		
50,67	68		
57,77	71		
89	74		
W18x35	54	W36x135	186
40	56		
46,50	63		
55	70		
60,65,71	74		
76,86,97	74		

TABLE 1-2 STANDARD BEAM CONNECTIONS - MINIMUM SHEAR CAPACITIES GR 50 STEEL

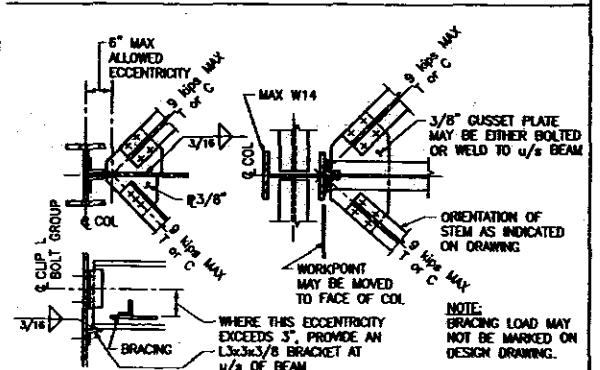

NOTE:
BRACING LOAD MAY NOT BE MARKED ON DESIGN DRAWING.

FIGURE 1-2 TYPICAL HORIZONTAL BRACING CONNECTIONS FOR BRACING LOADS LESS THAN 9 kips

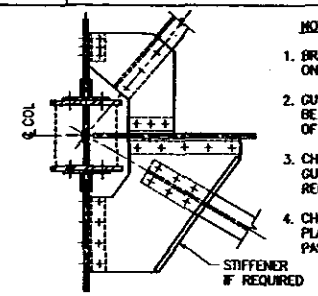

NOTES:

1. BRACING LOAD WILL BE MARKED ON THE DESIGN DRAWINGS.
2. GUSSET PLATE THICKNESS SHALL BE CHECKED FOR BUCKLING OF COMPRESSION EDGE.
3. CHECK EASE OF ERECTION IF GUSSET PLATE STIFFENERS ARE REQUIRED.
4. CHECK IF COLUMN STIFFENER PLATES ARE REQUIRED FOR PASS-THROUGH TENSION LOADS.

FIGURE 1-3 TYPICAL HORIZONTAL BRACING CONNECTIONS FOR BRACING LOADS 9 kips OR GREATER

HORIZONTAL GUSSET PLATES SHALL BE DESIGNED AS CLASS 1, 2, OR 3 SECTIONS. THICKNESS SHALL BE CALCULATED BASED ON THE FACTORED MOMENT $M_1 = Pf_1 \times e_1$ OR $M_2 = Pf_2 \times e_2$, WHICHEVER IS GREATER. THE TOTAL FACTORED RESISTANCE OF THE BOLTS AT CONN ① (CONN ②) SHALL BE EQUAL TO, OR GREATER THAN Pf_1 (Pf_2).

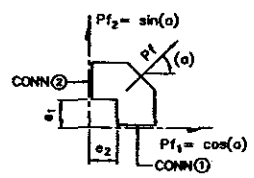

FIGURE 1-4 HORIZONTAL GUSSET PLATE DESIGN

DWG NO	TITLE
DRAWING TRACEABILITY LIST	

REF NUMBER	TITLE
NEXT USED ON	REFERENCES

REVISIONS

REV	DATE	DESCRIPTION	BY	CHK'D
F	22 APR 05	ISSUED FOR CH2M HILL APPROVAL & 90% REPORT	LG	PM / TH
E	8 APR 05	ISSUED FOR CH2M HILL APPROVAL & 90% REPORT	LG	PM / TH
D	31 JAN 05	ISSUED FOR CH2M HILL APPROVAL & 60% REPORT	LG	PM / TH
B	31 JAN 05	ISSUED FOR CH2M HILL APPROVAL & 60% REPORT	LG	PM / TH
C	07 DEC 04	ISSUED FOR CH2M HILL REVIEW	LG	PM / TH
B	23 NOV 04	ISSUED FOR INTERNAL APPROVAL	LG	PM / JDS
A	29 OCT 04	ISSUED FOR INTERNAL REVIEW	LG	PM / JDS

DWG DRAWING NO: F-145579-00-B-0002 REV: F

amec

145579-FINAL DBVS DESIGN

U.S. DEPARTMENT OF ENERGY
Office of River Protection

BULK VITRIFICATION STRUCTURAL STEEL GENERAL NOTES - SH 2

REV: F

In making requests for transmittal of data by any electronic media, the Company receiving such data agrees that AMEC Americas Limited cannot be held responsible for users of the data outside of or beyond the scope of our original agreement. Also, because data stored in electronic media or transmitted by electronic means can deteriorate undetected or be modified without the consultant's knowledge, the Company receiving data agrees that AMEC Americas Limited cannot be held liable for the compatibility, completeness or correctness of the data.

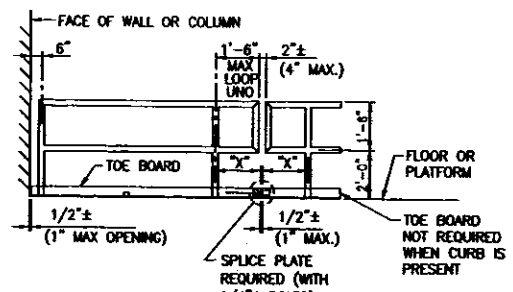

101
HANDRAIL AND TOE BOARD CLEARANCES

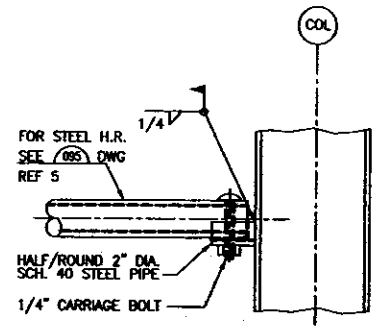

FOR STEEL RAILING

102
RAILING CONNECTION AT COLUMN

FIG 1

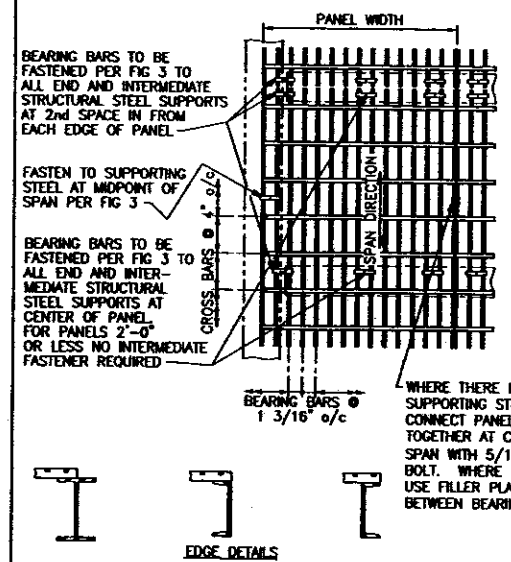

103
FLOOR GRATING FASTENED TO SUPPORTS BY SADDLE CLIPS – SH 1 OF 3

FIG 2 DETAILS OF TOE BOARD WITH NO HANDRAIL

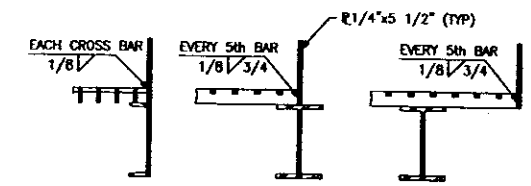

FIG 3

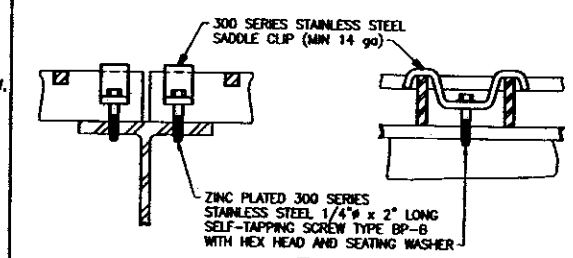

103
FLOOR GRATING FASTENED TO SUPPORTS BY SADDLE CLIPS – SH 2 OF 3

FIG 4

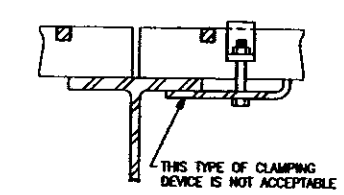

NOTES:
1. GRATING SHALL CONFORM TO THE METAL BAR GRATING MANUAL OF THE NATIONAL ASSOCIATION OF THE ARCHITECTURAL METAL MANUFACTURERS (NAAMM) EXCEPT WHERE SHOWN OTHERWISE ON THIS STANDARD.
2. GRATING FOR PLATFORMS AND FLOORS SHALL BE W-19-4 (1 1/4"x3/16") STEEL.
3. GRATING BUT NOT CLIPS SHALL BE PAINTED PER PROJECT SPECIFICATION 145579-Q-SP-001, SECTION 09900.

103
FLOOR GRATING FASTENED TO SUPPORTS BY SADDLE CLIPS – SH 3 OF 3

FIG 1 ARRANGEMENT AT COLUMNS

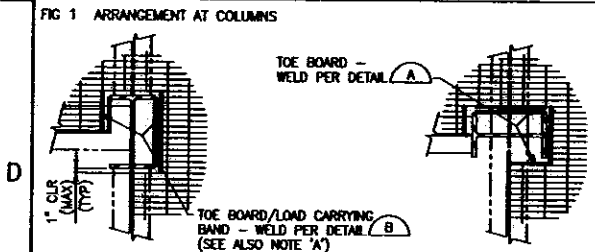

FIG 2 FLOOR OPENING

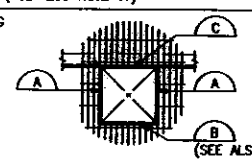

FIG 3 TYPICAL WELDING OF TOE BOARDS USED AS BANDING AROUND OPENINGS (CIRCULAR OR RECTANGULAR)

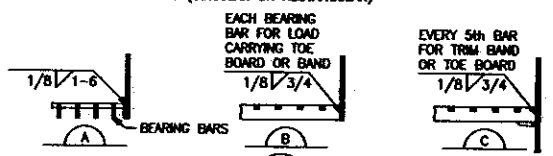

104
FLOOR GRATING AT OPENINGS – SH 1 OF 2

NOTES:
1. FOR GRATING DETAILS SEE DETAIL 103
2. PROVIDE 1/4"x5 1/2" TOE BOARD AROUND ALL OPENINGS (FOR PIPES, DUCTS, ETC), WHERE INDICATED ON CONSTRUCTION DRAWINGS.
3. DETAILS SHALL CONFORM WITH THE METAL BAR GRATING MANUAL OF THE ASSOCIATION OF ARCHITECTURAL METAL MANUFACTURERS.
4. TOE BOARDS SHALL BE WELDED AS BANDING.
5. TOE BOARD WELDED TO GRATING SHALL BE COATED PER GRATING. ALL OTHER TOE BOARD SHALL BE AS SHOWN ON THE HANDRAIL STANDARD.
6. PROVIDE LOAD CARRYING BANDING FOR ALL CUTOUTS HAVING UNSUPPORTED BEARING BARS.
7. SEE GRATING FLOOR PLANS FOR LOCATIONS OF BANDS AT ENDS OF GRATING PANELS.

DEFINITIONS:
A. BAND: A FLAT WELDED TO A SIDE OR END OF A GRATING PANEL, OR ALONG THE LINE OF A CUTOUT, AND EXTENDING NEITHER ABOVE NOR BELOW THE BEARING BARS.
B. LOAD CARRYING BAND (MAX UNSUPPORTED LENGTH = 12"): A BAND USED IN A CUTOUT TO TRANSFER THE LOAD FROM UNSUPPORTED BEARING BARS IN THE CUTOUT TO THE SUPPORTED BEARING BARS.
C. TRIM BAND: A BAND, ATTACHED TO THE GRATING FOR APPEARANCE, WHICH DOES NOT TRANSFER A LOAD FROM ONE BEARING BAR TO ANOTHER.

104
FLOOR GRATING AT OPENINGS – SH 2 OF 2

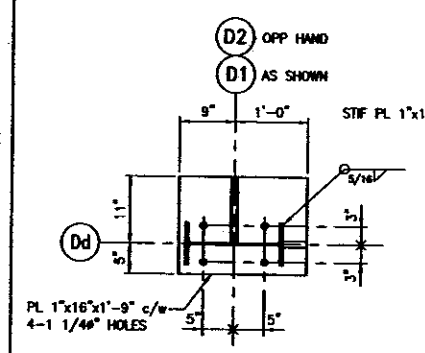

BASE PL TYPE 1D
1"=1'-0"
FOR BRACE GUSSET PL SEE CONN DETAILS DWG F-145579-00-B-0014

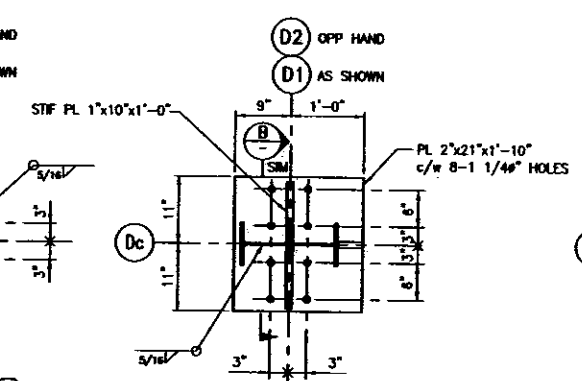

BASE PL TYPE 2D
1"=1'-0"
FOR BRACE GUSSET PL SEE CONN DETAILS DWG F-145579-00-B-0014

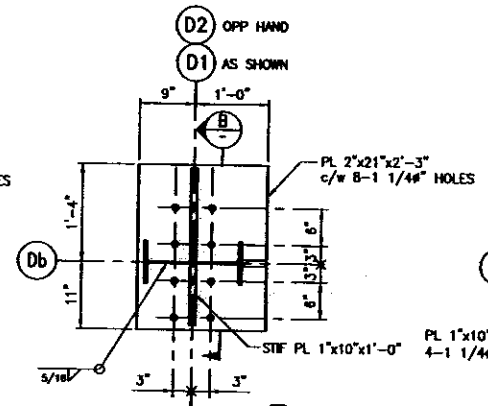

BASE PL TYPE 3D
1"=1'-0"
FOR BRACE GUSSET PL SEE CONN DETAILS DWG F-145579-00-B-0014

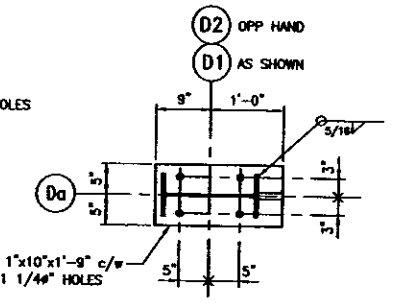

BASE PL TYPE 4D
1"=1'-0"
FOR BRACE GUSSET PL SEE CONN DETAILS DWG F-145579-00-B-0014

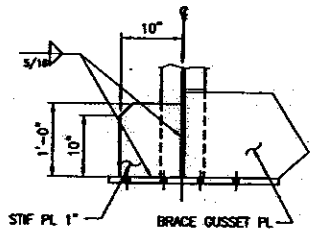

SECTION B
1"=1'-0"

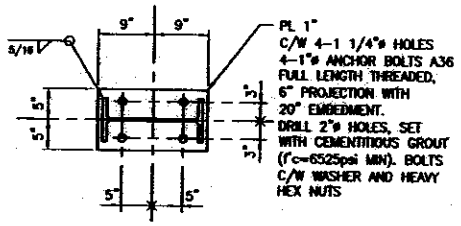

BASE PL TYPE 5D
1"=1'-0"

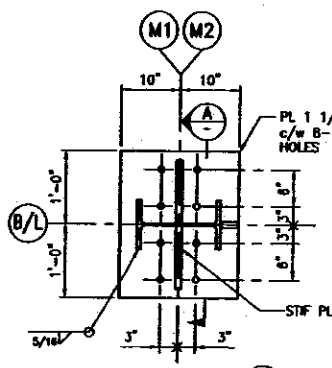

BASE PL TYPE 1M
1"=1'-0"
FOR BRACE GUSSET PL SEE CONN DETAILS DWG F-145579-00-B-0013

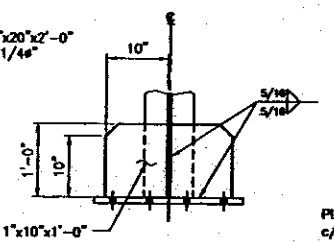

SECTION A
1"=1'-0"

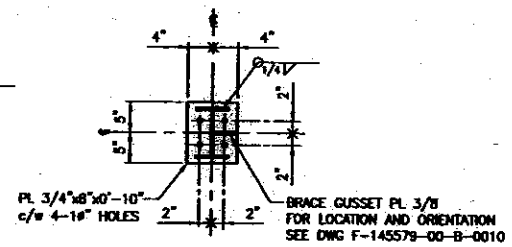

BASE PL TYPE 2M
1"=1'-0"

DWG NO	TITLE
DRAWING TRACEABILITY LIST	

REF NUMBER	TITLE
REFERENCES	
NEXT USED ON	

REVISIONS

Rev.	REVISION DESCRIPTION	Date	By	Chk'd	Approved Sup Eng	Approved Sub Eng
J	ISSUED FOR CH2M HILL APPROVAL & 90% REPORT	07 OCT 05	JC		PM	FWS
H	ISSUED FOR CH2M HILL APPROVAL & 90% REPORT	22 APR 05	LG		PM	TH
G	ISSUED FOR CH2M HILL APPROVAL & 90% REPORT	8 APR 05	LG		PM	TH
F	ISSUED FOR CH2M HILL APPROVAL & 90% REPORT	23 FEB 05	LG		PM	TH
E	ISSUED FOR CH2M HILL APPROVAL & 90% REPORT	15 FEB 05	LG		PM	TH
D	ISSUED FOR CH2M HILL APPROVAL & 90% REPORT	31 JAN 05	LG		PM	TS
C	ISSUED FOR CH2M HILL REVIEW	07 DEC 04	LG		PM	TS
B	ISSUED FOR INTERNAL REVIEW	25 NOV 04	LG		PM	JDS
-A	ISSUED FOR INTERNAL REVIEW	29 OCT 04	LG		PM	JDS

DWG NO: F-145579-00-B-0003 REV: J

amec

NAME	DATE
Lucio Gross	12 SEP 05
	12 SEP 05

145579-FINAL DBVS DESIGN

U.S. DEPARTMENT OF ENERGY
Office of River Protection

BULK VITRIFICATION
STRUCTURAL STEEL
TYPICAL DETAILS – SH 1

SIZE F

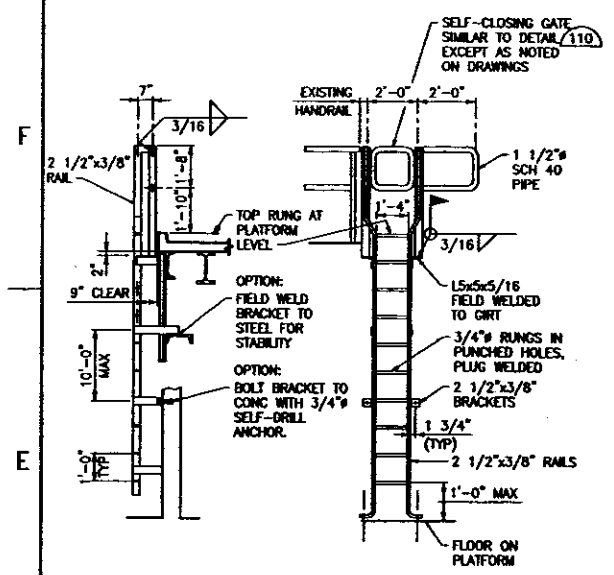

106
LADDER – SH 1 OF 2

NOTES:

1. LADDERS SHALL BE MILD STEEL WELDED CONSTRUCTION.
2. IF THE LADDER MEETS PLATFORM HANDRAIL DO NOT USE HANDRAIL LOOP EXTENSION. PLATFORM HANDRAIL DOES NOT CONNECT TO LADDER HANDRAIL.
3. COATING SHALL PER PROJECT PAINT SPECIFICATIONS, CONSTRUCTION SPECIFICATION 145579-Q-SP-001, SECTION 09900.
4. FOR SAFETY CAGE AND PLATFORM DETAIL SEE DETAIL 107.

106
LADDER – SH 2 OF 2

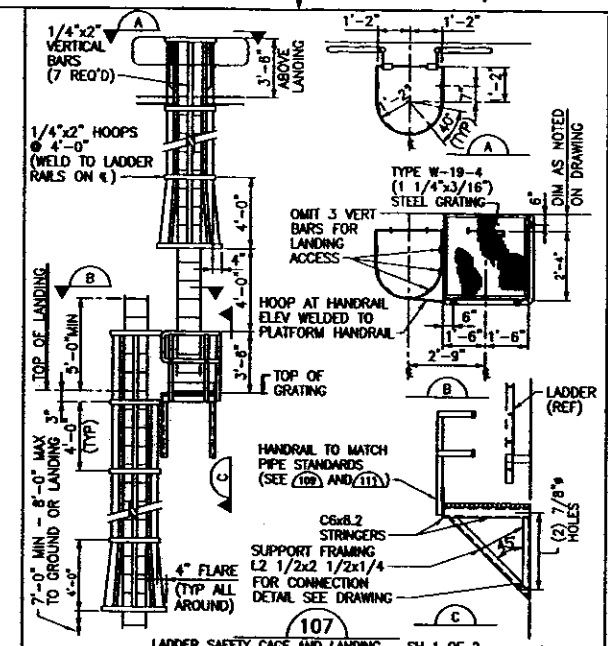

107
LADDER SAFETY CAGE AND LANDING – SH 1 OF 2

NOTES:

1. SAFETY CAGE AND LANDINGS TO BE MILD STEEL WELDED CONSTRUCTION WITH ALL JOINTS GROUND SMOOTH.
2. SAFETY CAGES SHALL BE PROVIDED ON LADDERS AS SHOWN ON DRAWINGS.
3. FOR LADDER DETAILS SEE TYPICAL DETAIL
4. COATING SHALL CONFORM TO PROJECT SPECIFICATIONS. 108

107
LADDER SAFETY CAGE AND LANDING – SH 2 OF 2

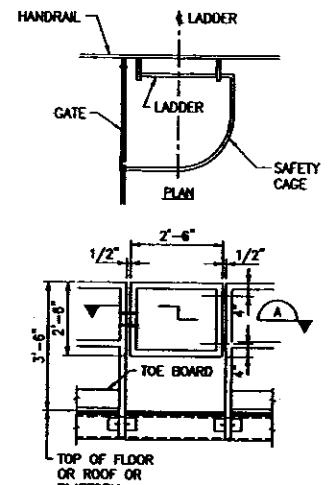

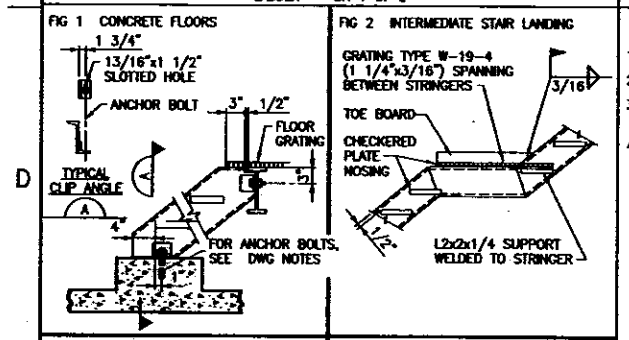

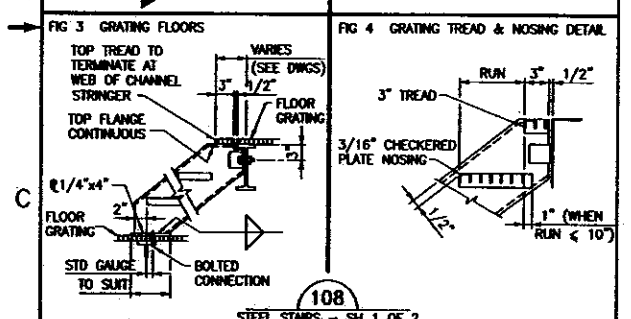

108
STEEL STAIRS – SH 1 OF 2

NOTES:

1. ALL CLIP ANGLES SHALL BE SHOP WELDED TO STRINGERS.
2. GRATING FOR TREADS SHALL BE TYPE W-19-4 (1 1/4x3/16).
3. STRUCTURAL STEEL MEMBERS SHALL BE COATED PER CONSTRUCTION SPECIFICATIONS 145579-Q-SP-001, SECTION 09900.
4. FOR STEEL GRATING SEE DETAIL 103

108
STEEL STAIRS – SH 2 OF 2

FIG 1 STANDARD FIXED HANDRAIL

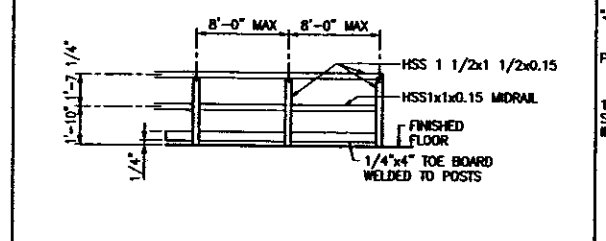

FIG 2 CORNER DETAIL

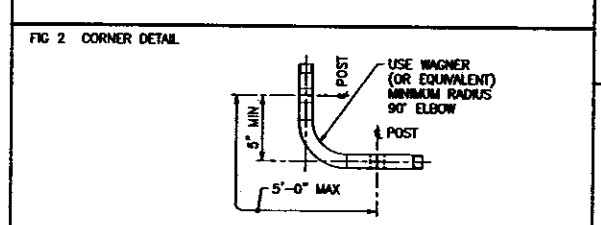

109
STEEL SQUARE TUBE HANDRAIL (FIXED) – SH 1 OF 3

FIG 3 CONNECTION FOR CHANNELS

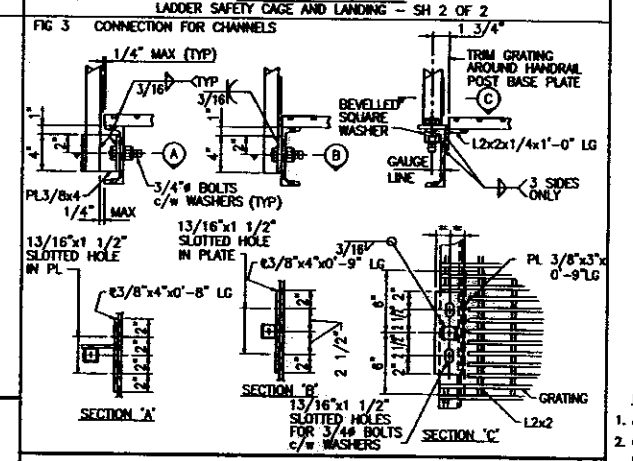

FIG 4 CONNECTION FOR W SHAPES

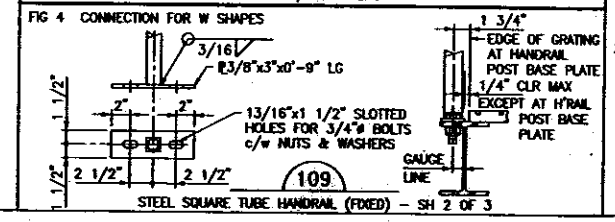

109
STEEL SQUARE TUBE HANDRAIL (FIXED) – SH 2 OF 3

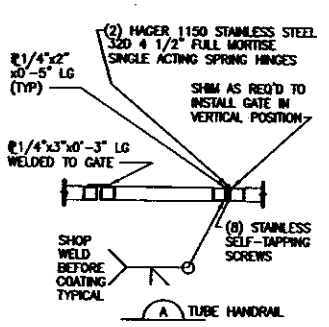

NOTES:

1. ADJUST SPRING TO ENSURE GATE FUNCTIONS PROPERLY.
2. GATE SHALL BE CONSTRUCTED OF STEEL TUBE HANDRAIL PER DETAIL 109 EXCEPT FOR LADDERS WITH 2'-0" HANDRAIL EXTENSIONS EITHER SIDE, WHEREIN SUCH EXTENSIONS SHALL BE 1 1/2"ø SCH 40 PIPE.
3. ASSEMBLY SHALL BE PAINTED EXCEPT FOR STAINLESS STEEL COMPONENTS.

110
SELF CLOSING HANDRAIL GATE

NOTES:

1. MATERIAL SPECIFICATION: SQUARE TUBING SHALL BE ASTM 500 GRADE B (46 ksi MIN YIELD). CONNECTING PLATES AND TOE BOARDS SHALL BE OF ASTM A36 STEEL. BOLTS SHALL CONFORM TO ASTM A325 UNO.
2. HANDRAIL SHALL HAVE MITERED BENDS AND ALL-WELDED CONSTRUCTION. SHARP CORNERS SHALL BE GROUND SMOOTH.
3. STEEL HANDRAIL SHALL BE SUPPLIED WITH SHOP-APPLIED COMPLETE COATING SYSTEM PER PROJECT CONSTRUCTION SPECIFICATION 145579-Q-SP-001, SECTION 09900.
4. THIS HANDRAIL SATISFIES THE REQUIREMENTS OF OSHA (1999) AND IS DESIGNED FOR A 200 lb POINT LOAD APPLIED TO THE TOP RAIL AT ANY POINT IN ANY DIRECTION, OR 100 lb/ft APPLIED VERTICALLY ON THE TOP RAIL.

109
STEEL SQUARE TUBE HANDRAIL (FIXED) – SH 3 OF 3

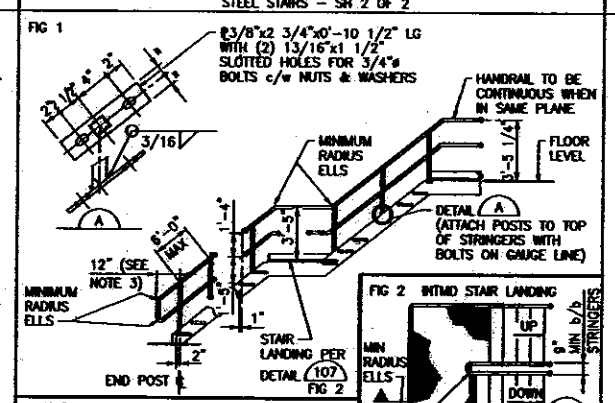

NOTES:

1. HANDRAIL SHALL BE DETAILED PER 109.
2. STEEL HANDRAIL SHALL BE SUPPLIED WITH SHOP-APPLIED COMPLETE COATING SYSTEM PER PROJECT COATING SPECIFICATION.
3. WHERE NOTED ON DWGS, HANDRAIL SHALL EXTEND A MIN 12" BEYOND TOP & BOTTOM RISERS WHERE THERE IS NO CONTINUING OR ADJACENT HANDRAIL.
4. USE WAGNER (OR EQUIVALENT) MIN RADIUS ELLS FOR ALL CORNERS AND BENDS.
5. REFERENCE TYPICAL DETAILS 108 & 109.

111
STEEL SQUARETUBE HANDRAIL

DWG NO	TITLE
DRAWING TRACEABILITY LIST	

REF NUMBER	TITLE
NEXT USED ON	REFERENCES

REV	DATE	DESCRIPTION	REV BY	CHECKED BY	CHECK
G		ISSUED FOR CH2M HILL APPROVAL, & 90% REPORT	JC		PM FRS
F		ISSUED FOR CH2M HILL APPROVAL, & 90% REPORT	LG		PM TH
E		ISSUED FOR CH2M HILL APPROVAL, & 90% REPORT	LG		PM TH
D		ISSUED FOR-CH2M HILL APPROVAL, & 90% REPORT	LG		PM TH
C		ISSUED FOR CH2M HILL REVIEW	LG		PM TH
B		ISSUE FOR INTERNAL APPROVAL	LG		PM JDS
A		ISSUE FOR INTERNAL REVIEW	LG		PM JDS

REVISIONS

In making requests for transmittal of data by any electronic media, the Company receiving such data agrees that AMEC Americas Limited cannot be held responsible for users of the data outside of or beyond the scope of our original agreement. Also, because data stored in electronic media or transmitted by electronic means can deteriorate undetected or be modified without the consultant's knowledge, the Company receiving data agrees that AMEC Americas Limited cannot be held liable for the compatibility, completeness or correctness of the data.

DWG NO F-145579-00-B-0004 REV G

amec

PROJECT 145579-FINAL DBVS DESIGN

U.S. DEPARTMENT OF ENERGY
Office of River Protection

BULK VITRIFICATION
STRUCTURAL STEEL
TYPICAL DETAILS – SH 2

SIZE F

In making requests for transmittal of data by any electronic media, the Company receiving such data agrees that AMEC Americas Limited cannot be held responsible for wear of the data outside of or beyond the scope of our original agreement. Also, because data stored in electronic media or transmitted by electronic means can deteriorate undetected or be modified without the consultant's knowledge, the Company receiving data agrees that AMEC Americas Limited cannot be held liable for the compatibility, completeness or correctness of the data.

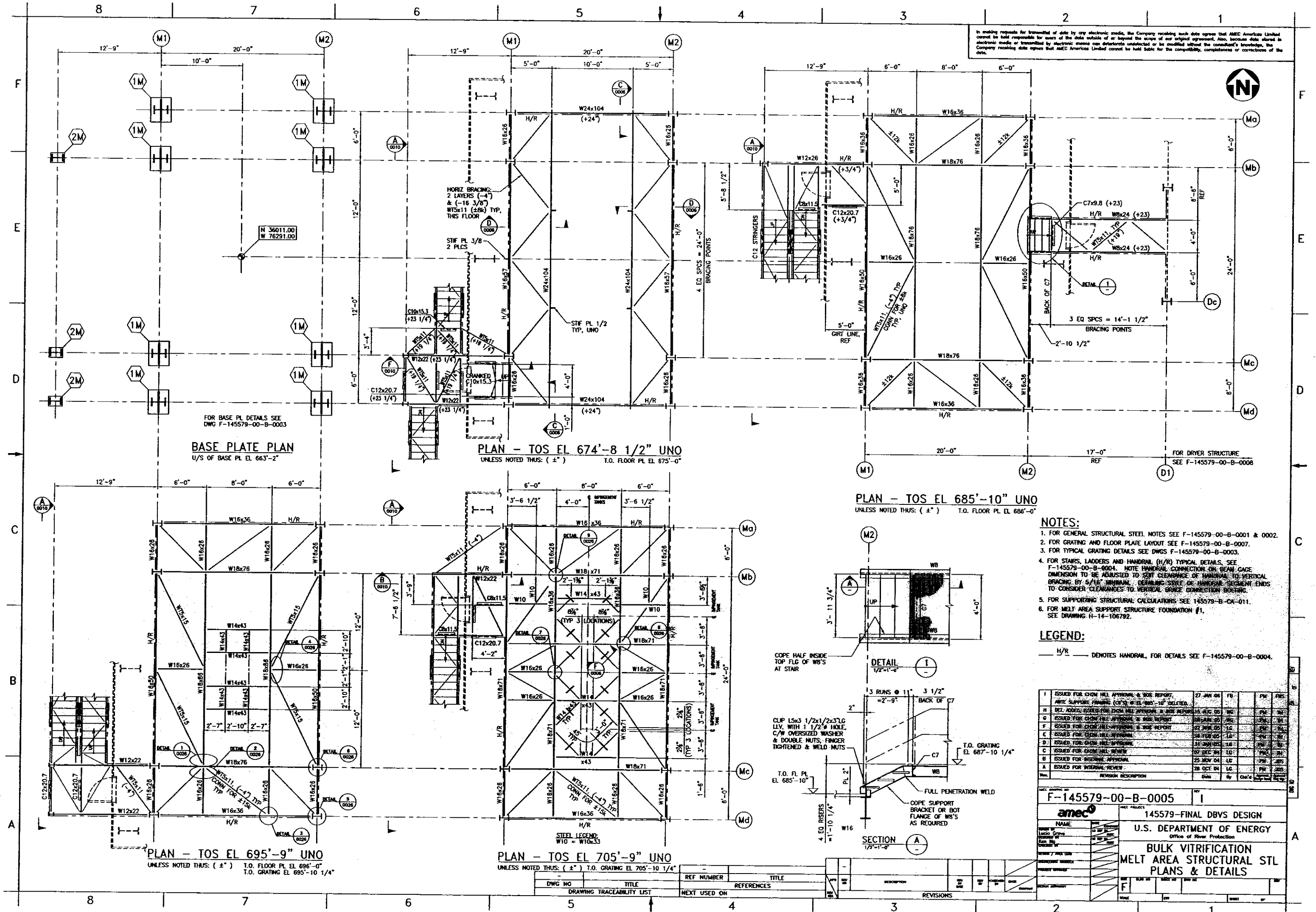

In making requests for transmittal of data by any electronic media, the Company receiving such data agrees that AMEC Americas Limited cannot be held responsible for users of the data outside of or beyond the scope of our original agreement. Also, because data stored in electronic media or transmitted by electronic means can deteriorate undetected or be modified without the consultant's knowledge, the Company receiving data agrees that AMEC Americas Limited cannot be held liable for the compatibility, completeness or correctness of the data.

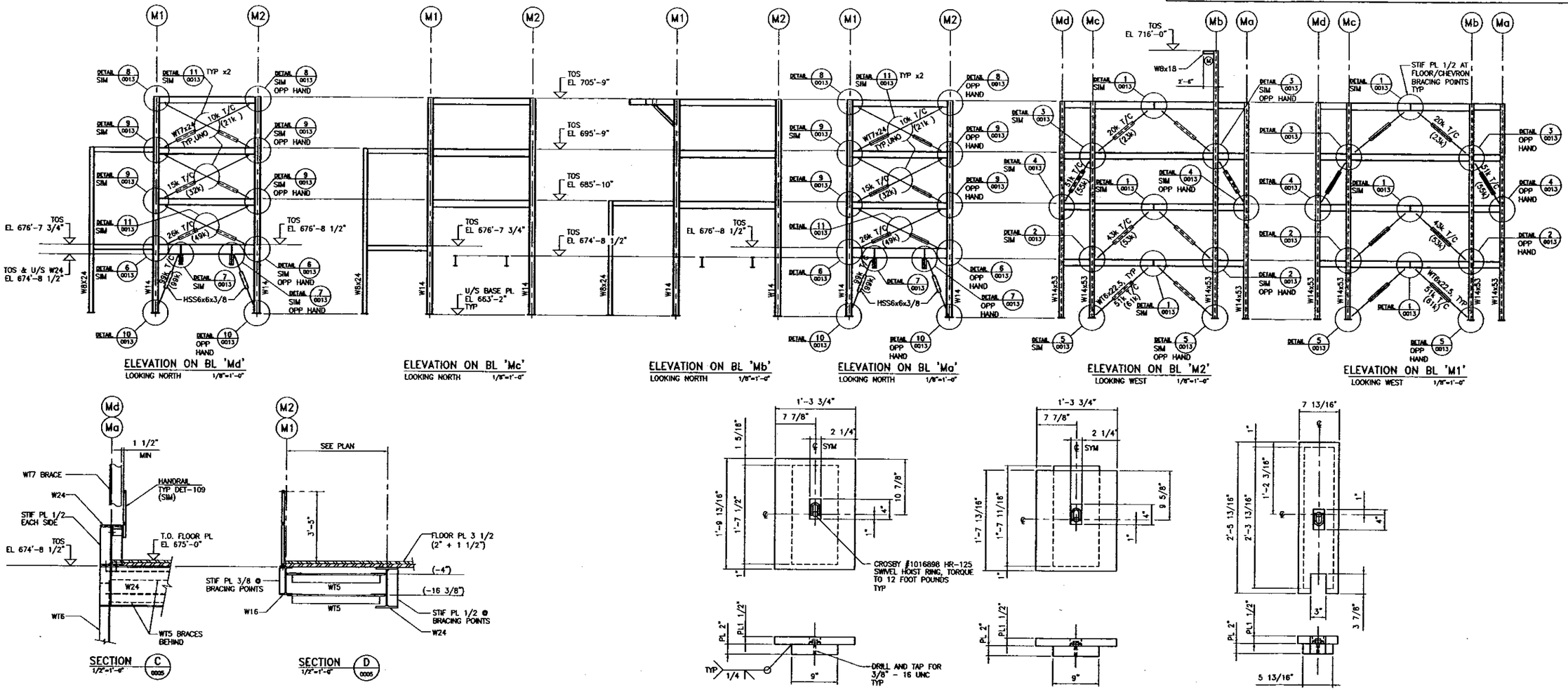

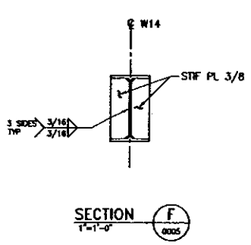

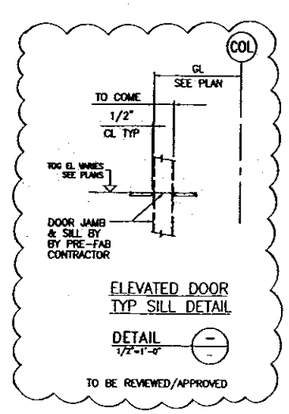

NOTES:

1. FOR NOTES SEE F-145579-00-B-0005.
2. CONNECT USING HILTI HIT HY-150 ADHESIVE ANCHORS WITH 3/4"ø 'HILTI HAS' ROD MATERIAL MEETING THE REQUIREMENTS OF ASTM F593 (AISI 304). ANCHORS SHALL BE INSTALLED PER MANUFACTURER'S INSTRUCTIONS.
3. FOR SUPPORTING STRUCTURAL CALCULATIONS SEE 145579-B-CA-011.
4. THE LOAD SHOWN IN BRACKETS IS THE CONNECTION FORCE. CONNECTION DESIGN TO MEET NET AREA REQUIREMENT SPECIFIED ON UBC 1997, 2214.6.3.2. LOADS NOT INDICATED ARE AS PER OPPOSITE HAND BRACE.

Rev.	REVISION DESCRIPTION	Date	By	Chk'd	Approved Eng. Lead	Approved Eng. Mgr.
G	ISSUED FOR CH2M HILL APPROVAL & 90% REPORT, SECT 'E' SHOWING ANTE SUPPORT FRAMING DELETED.	27 JAN 06	FB		PM	FWS
F	ISSUED FOR CH2M HILL APPROVAL & 90% REPORT	22 APR 05	LG		PM	TH
E	ISSUED FOR CH2M HILL APPROVAL	16 FEB 05	LG		PM	TH
D	ISSUED FOR CH2M HILL APPROVAL	31 JAN 05	LG		PM	TH
C	ISSUED FOR CH2M HILL REVIEW	07 DEC 04	LG		PM	TH
B	ISSUED FOR INTERNAL APPROVAL	25 NOV 04	LG		PM	JDS
A	ISSUED FOR INTERNAL REVIEW	29 OCT 04	LG		PM	JDS

AMEC DRAWING NO: F-145579-00-B-0006 REV: G

amec

AMEC PROJECT: 145579-FINAL DBVS DESIGN

NAME	DATE
DRAWN BY Lucio Grave	13 OCT 04
DESIGNED BY Ken Ho	08 NOV 04
CHECKED BY	
DISCIPLINE / AREA LEAD	
ENGINEERING MANAGER	
PROJECT MANAGER	
CLIENT APPROVAL	

U.S. DEPARTMENT OF ENERGY
Office of River Protection

BULK VITRIFICATION
MELT AREA STRUCTURAL STL
ELEVATIONS & DETAILS

SIZE F | FILE NO | INDEX NO | DWG NO | REV

SCALE | SHEET OF

DWG NO	TITLE	REF NUMBER	TITLE
-	-	-	REFERENCES
DRAWING TRACEABILITY LIST		NEXT USED ON	

NO	REV NO	DESCRIPTION	REV BY DATE	REV BY	CHECKED BY	DATE Checked
REVISIONS						

In making requests for transmittal of data by any electronic media, the Company receiving such data agrees that AMEC Americas Limited cannot be held responsible for users of the data outside of or beyond the scope of our original agreement. Also, because data stored in electronic media or transmitted by electronic means can deteriorate undetected or be modified without the consultant's knowledge, the Company receiving data agrees that AMEC Americas Limited cannot be held liable for the compatibility, completeness or correctness of the data.

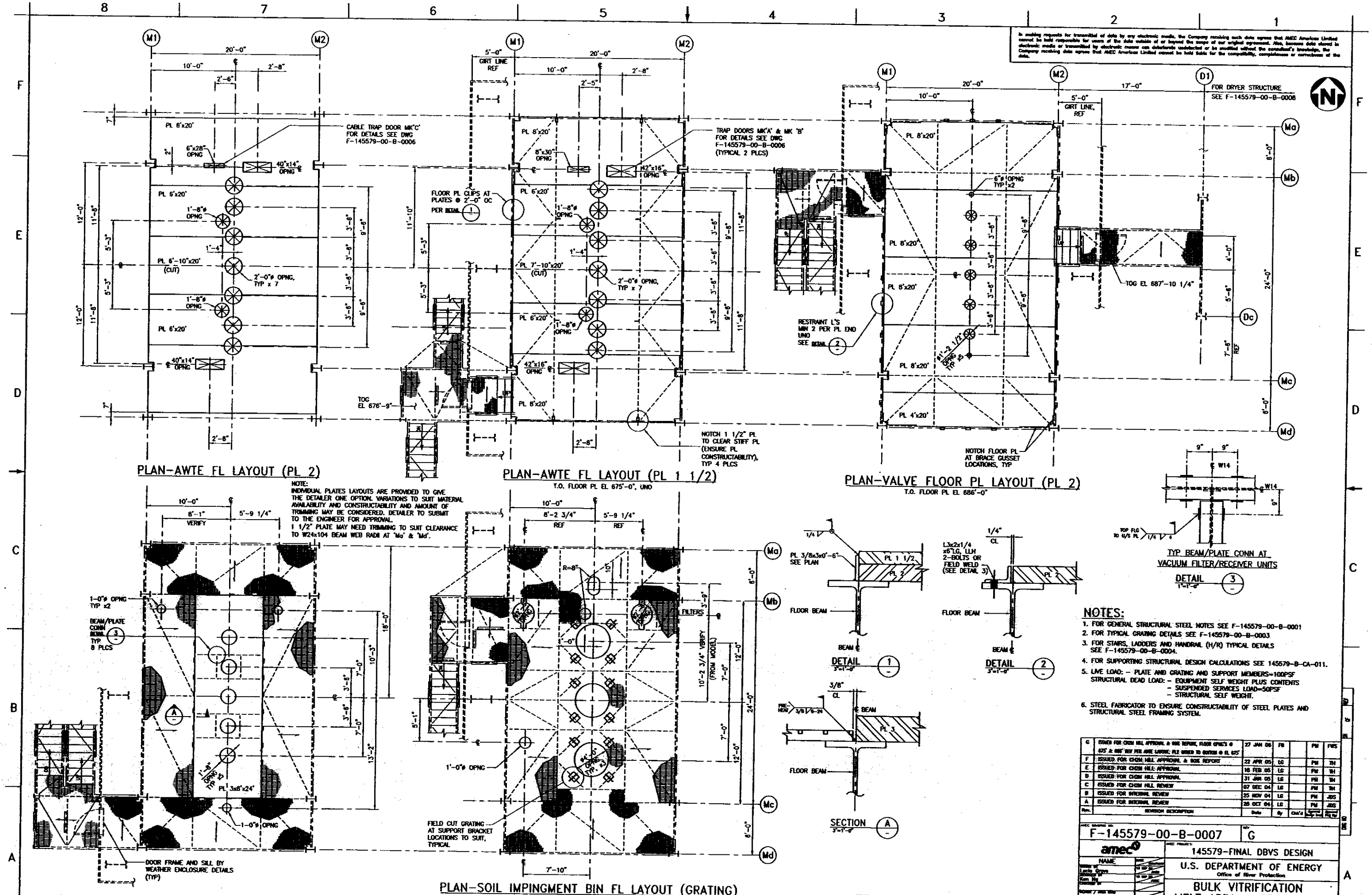

NOTES:

1. FOR GENERAL STRUCTURAL STEEL NOTES SEE F-145579-00-B-0001
2. FOR TYPICAL GRATING DETAILS SEE F-145579-00-B-0003
3. FOR STAIRS, LADDERS AND HANDRAIL (H/R) TYPICAL DETAILS SEE F-145579-00-B-0004.
4. FOR SUPPORTING STRUCTURAL DESIGN CALCULATIONS SEE 145579-B-CA-011.
5. LIVE LOAD: – PLATE AND GRATING AND SUPPORT MEMBERS=100PSF
   STRUCTURAL DEAD LOAD: – EQUIPMENT SELF WEIGHT PLUS CONTENTS
   – SUSPENDED SERVICES LOAD=50PSF
   – STRUCTURAL SELF WEIGHT.
6. STEEL FABRICATOR TO ENSURE CONSTRUCTABILITY OF STEEL PLATES AND STRUCTURAL STEEL FRAMING SYSTEM.

Rev.	REVISION DESCRIPTION	Date	By	Chk'd	Appr'd	Appr'd
G	ISSUED FOR CH2M HILL APPROVAL & 90% REPORT, FLOOR OPNG'S @ 625' & 695' REF PER AMEC LAYOUT; PL2 UNDER TO RAISED @ EL 625'	27 JAN 06	FB		PM	FWS
F	ISSUED FOR CH2M HILL APPROVAL & 90% REPORT	22 APR 05	LG		PM	TH
E	ISSUED FOR CH2M HILL APPROVAL	18 FEB 05	LG		PM	TH
D	ISSUED FOR CH2M HILL APPROVAL	31 JAN 05	LG		PM	TH
C	ISSUED FOR CH2M HILL REVIEW	07 DEC 04	LG		PM	TH
B	ISSUED FOR INTERNAL REVIEW	25 NOV 04	LG		PM	JDS
A	ISSUED FOR INTERNAL REVIEW	28 OCT 04	LG		PM	JDS

AMEC DRAWING NO. F-145579-00-B-0007 REV. G

amec

AMEC PROJECT: 145579-FINAL DBVS DESIGN

U.S. DEPARTMENT OF ENERGY
Office of River Protection

BULK VITRIFICATION MELT AREA – GRATING & FLOOR PLATE LAYOUT

NAME	DATE
Lucia Gross	10 JAN 06
Kim Ng	10 JAN 06

SIZE F

DWG NO	TITLE
DRAWING TRACEABILITY LIST	

REF NUMBER	TITLE
REFERENCES	
NEXT USED ON	

REVISIONS

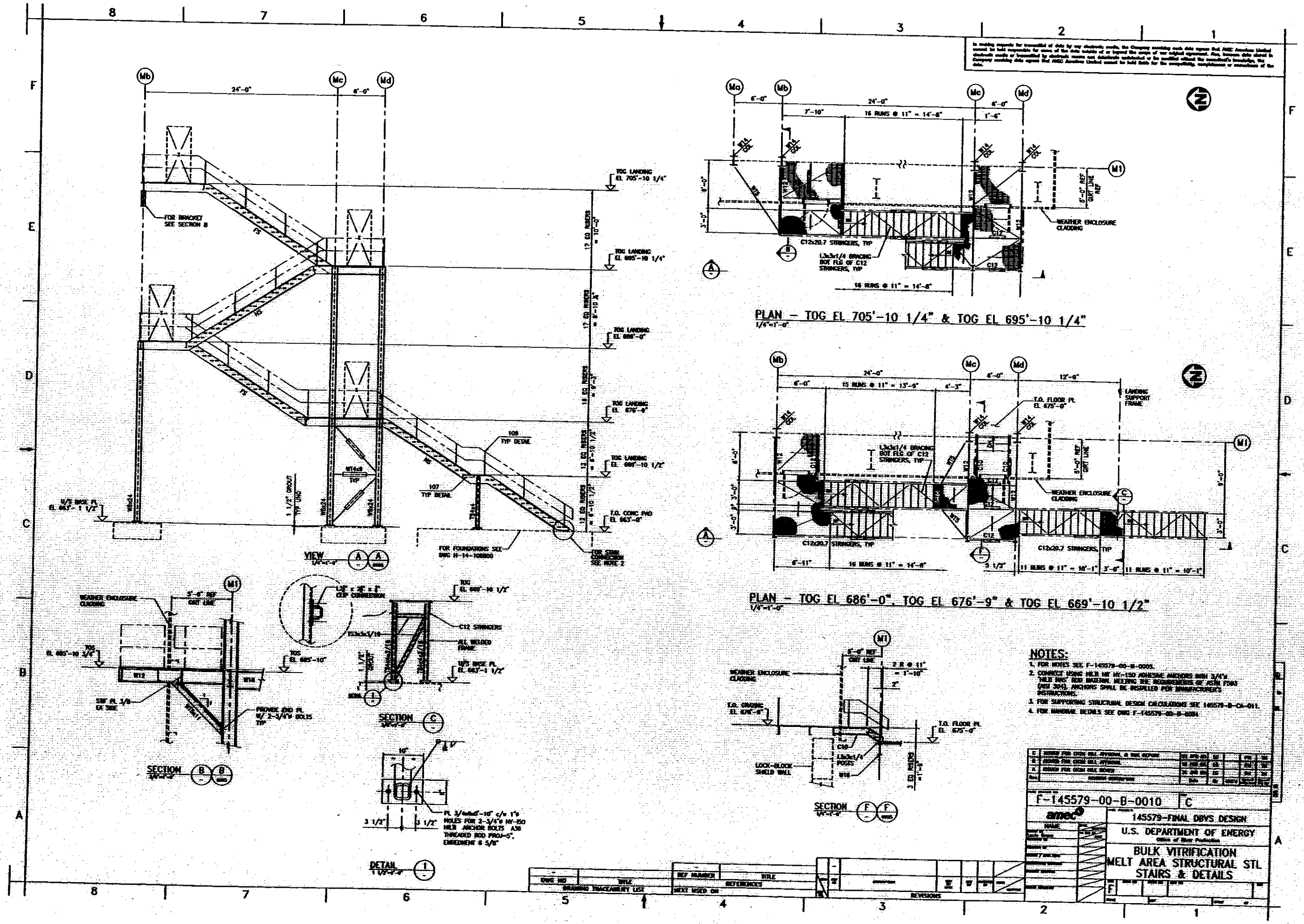
VIEW
SECTION
DETAIL
PLAN – TOG EL 705'-10 1/4" & TOG EL 695'-10 1/4"
PLAN – TOG EL 686'-0", TOG EL 676'-9" & TOG EL 669'-10 1/2"
NOTES:
1. FOR NOTES SEE F-145579-00-B-0005.
2. CONNECT USING HILTI HIT HY-150 ADHESIVE ANCHORS WITH 3/4"ø HILTI HAC ROD MATERIAL MEETING THE REQUIREMENTS OF ASTM F593 (AISI 304). ANCHORS SHALL BE INSTALLED PER MANUFACTURER'S INSTRUCTIONS.
3. FOR SUPPORTING STRUCTURAL DESIGN CALCULATIONS SEE 145579-B-CA-011.
4. FOR HANDRAIL DETAILS SEE DWG F-145579-00-B-0004.
F-145579-00-B-0010
C
145579-FINAL DBVS DESIGN
U.S. DEPARTMENT OF ENERGY
BULK VITRIFICATION
MELT AREA STRUCTURAL STL
STAIRS & DETAILS
DRAWING TRACEABILITY LIST
REFERENCES
REVISIONS

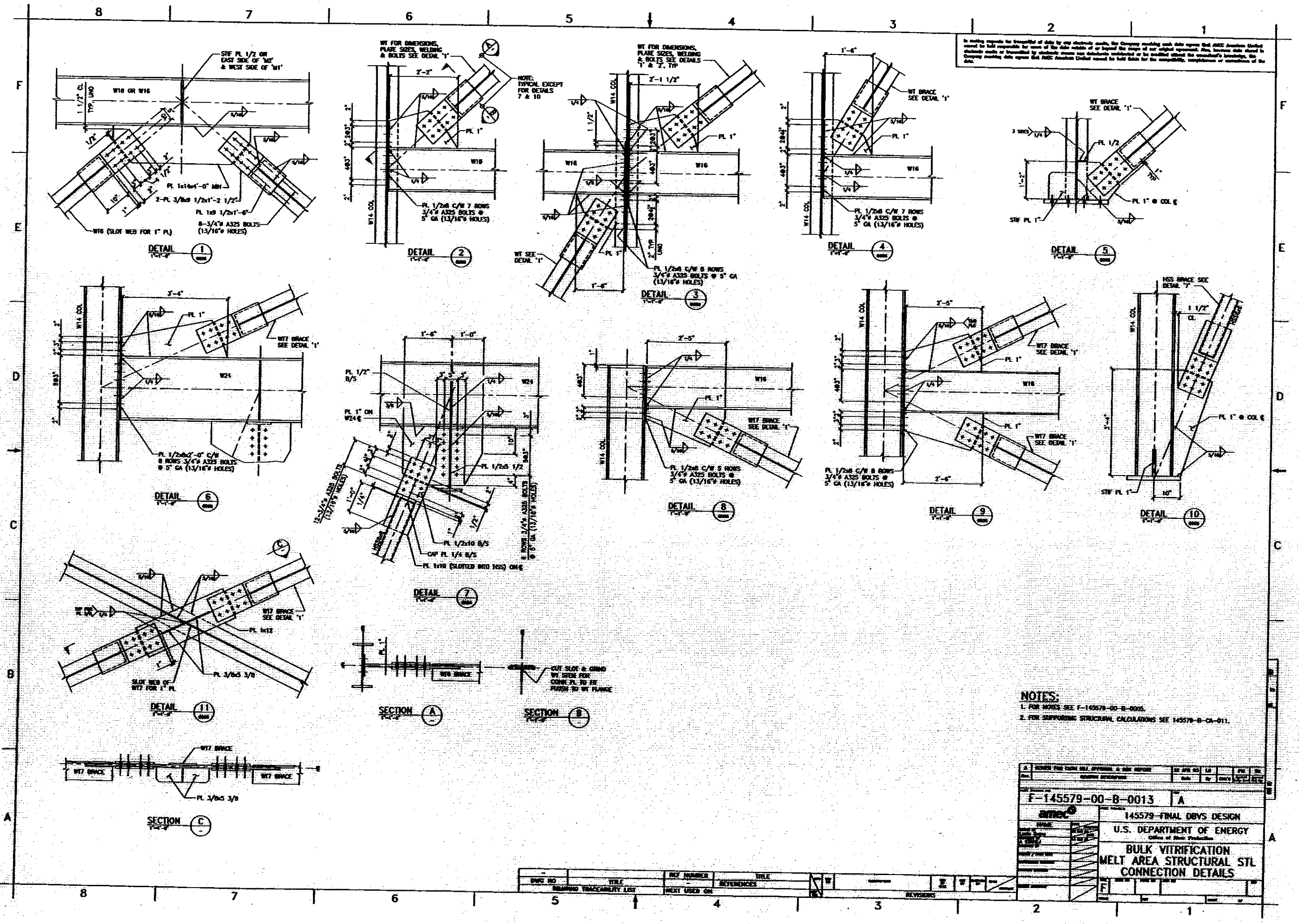
DETAIL 1
DETAIL 2
DETAIL 3
DETAIL 4
DETAIL 5
DETAIL 6
DETAIL 7
DETAIL 8
DETAIL 9
DETAIL 10
DETAIL 11
SECTION A
SECTION B
SECTION C
NOTES:
1. FOR NOTES SEE F-145579-00-B-0005.
2. FOR SUPPORTING STRUCTURAL CALCULATIONS SEE 145579-B-CA-011.
F-145579-00-B-0013
A
145579-FINAL DBVS DESIGN
U.S. DEPARTMENT OF ENERGY
BULK VITRIFICATION
MELT AREA STRUCTURAL STL
CONNECTION DETAILS

In making requests for transmittal of data by any electronic media, the Company requesting such data agrees that AMEC Americas Limited cannot be held responsible for more of the data available of or beyond the scope of our original agreement. Also, because data stored in electronic media or transmitted by electronic means can deliberately unintended or be modified without the consultant's knowledge, the Company requesting data agrees that AMEC Americas Limited cannot be held liable for the compatibility, completeness or correctness of the data.

No.	AMEC Dwg. No.	REFERENCE DRAWINGS
1	F-145579-00-D-0051	MELT AREA G.A. PLAN VIEWS
2	F-145579-00-D-0044	MELT AREA G.A. SECTIONS
3	F-145579-00-D-0010	MELT AREA G.A.

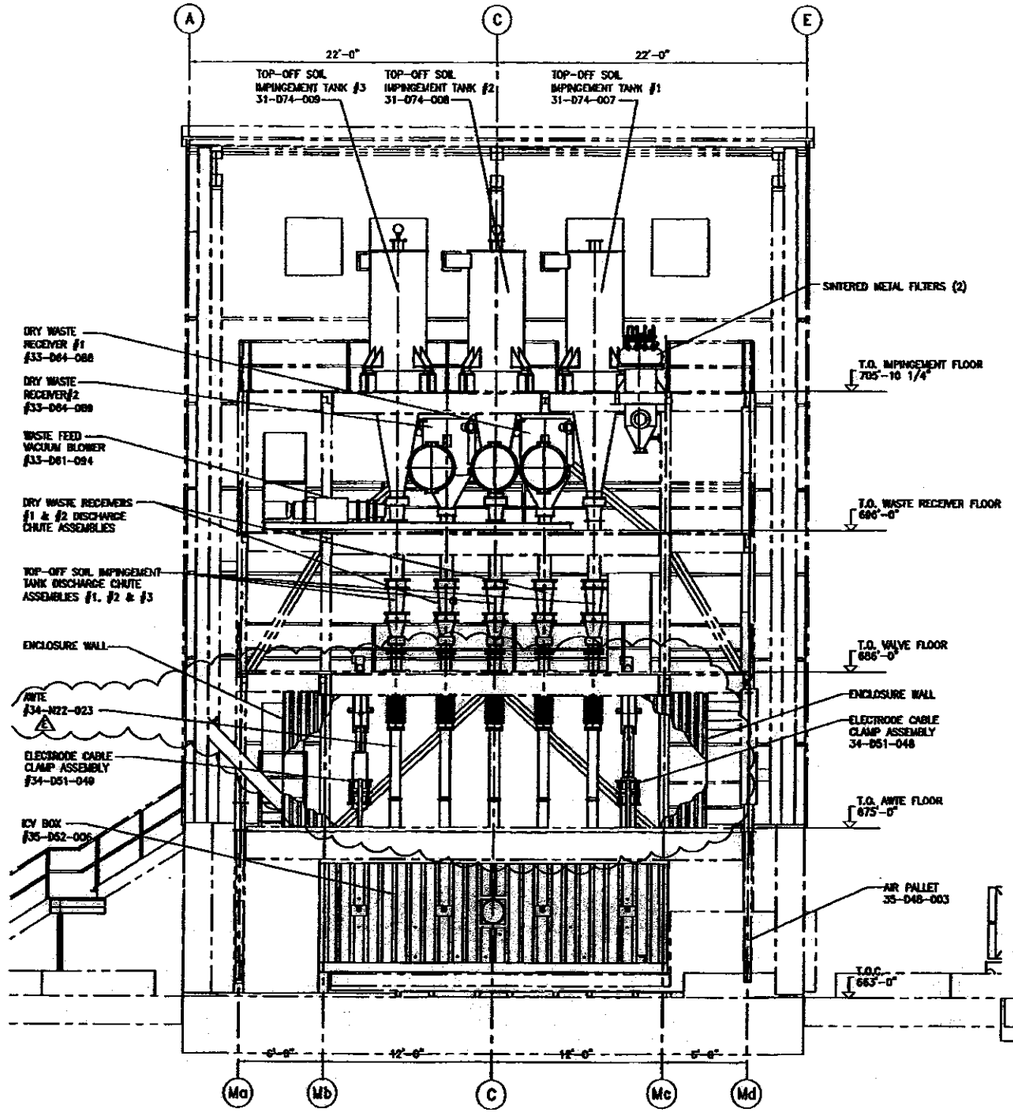

ELEVATION LOOKING WEST
SCALE: 1/4"=1'-0"

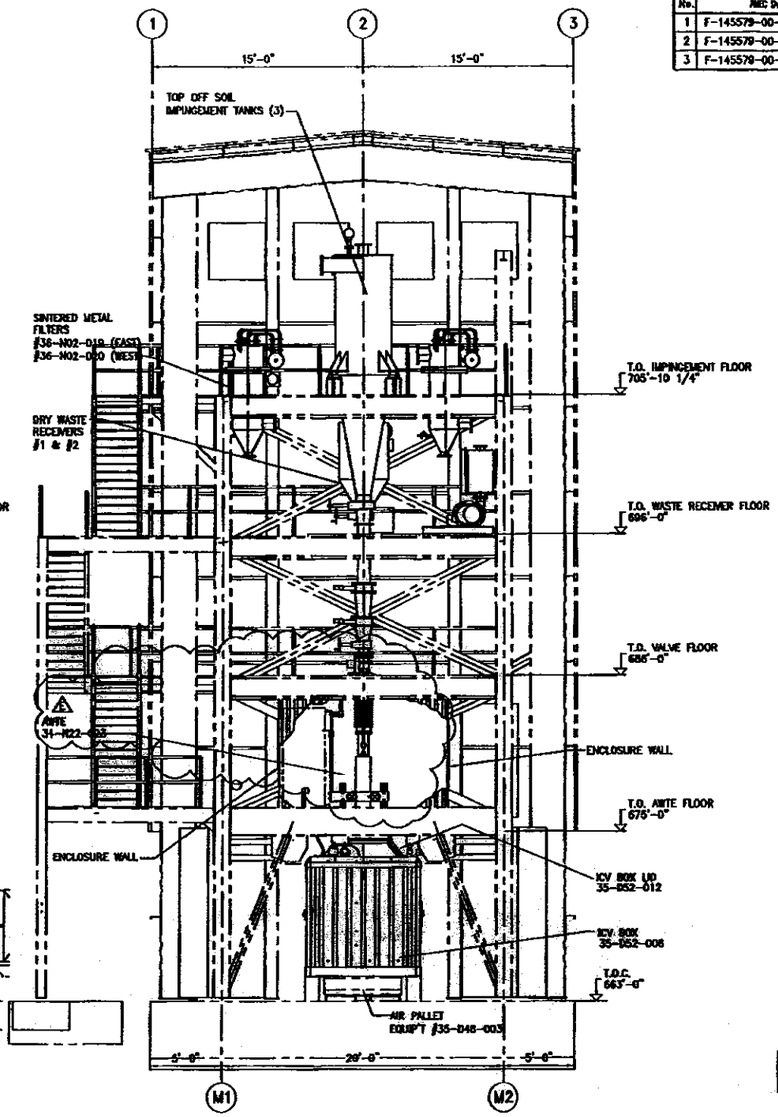

ELEVATION LOOKING NORTH
SCALE: 1/4"=1'-0"

NOT APPROVED FOR CONSTRUCTION

Rev.	REVISION DESCRIPTION	Date	By	CHK'D	Approved	Date
F	ISSUED FOR APPROVAL	04-FEB-05	AS			
E	ISSUED FOR DESIGN	15-DEC-05	[illegible]		DVS	JDS
D	ISSUED FOR CHON MILL APPROVAL/BOM REPORT	02-MAR-05	[illegible]	AA	[illegible]	[illegible]
C	ISSUED FOR CHON MILL REVIEW/APPROVAL	05-NOV-04	[illegible]		[illegible]	[illegible]
B	ISSUED FOR INTERNAL APPROVAL	18-OCT-04	[illegible]		FS	JDS
A	ISSUED FOR REVIEW	27-AUG-04	[illegible]		FS/AJ	TM

F-145579-00-D-0041 F

amec

NAME	
[illegible]	
[illegible]	
[illegible]	
[illegible]	
[illegible]	
[illegible]	

145579-FINAL DBVS DESIGN

U.S. DEPARTMENT OF ENERGY
Office of River Protection

BULK VITRIFICATION
MELT AREA G.A.
SECTIONS

F | 1/4"=1'-0" | 1 of 1

DWG NO	TITLE
–	DRAWING TRACEABILITY LIST

REF NUMBER	TITLE
–	REFERENCES
NEXT USED ON	

REV	DATE	DESCRIPTION	BY	CHK'D	APPD	APPD	DATE
–		REVISIONS					

In making requests for transmittal of data by any electronic media, the Company receiving such data agrees that AMEC Americas Limited cannot be held responsible for errors of the data outside of or beyond the scope of our original agreement. Also, because data stored in electronic media or transmitted by electronic means can deteriorate undetected or be modified without the consultant's knowledge, the Company receiving data agrees that AMEC Americas Limited cannot be held liable for the compatibility, completeness or correctness of the data.

No.	AMEC Dwg. No.	REFERENCE DRAWINGS
1	F-145579-00-D-0044	MELT AREA G.A. SECTION A
2	F-145579-00-D-0041	MELT AREA G.A. SECTION B
3	F-145579-34-D-0001	AREA 34 – WASTE TRANSFER AWTE PLAN & ELEVATIONS
4	F-145579-34-D-0010	MELT AREA G.A.

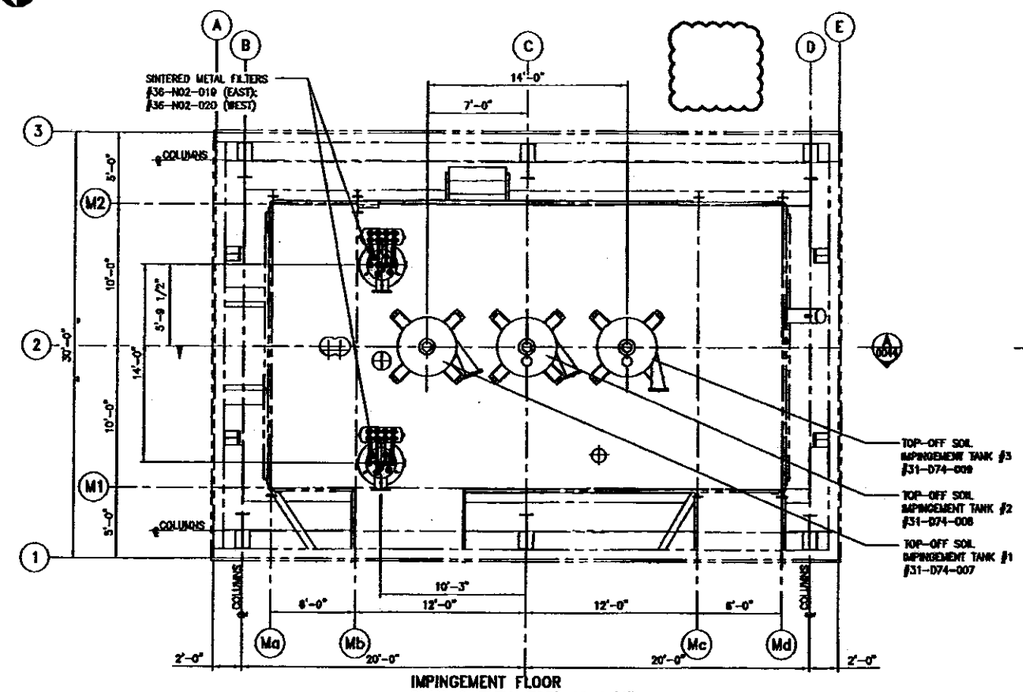

IMPINGEMENT FLOOR
PLAN @ ELEV. 705'-10 1/4"
1/4"=1'-0"

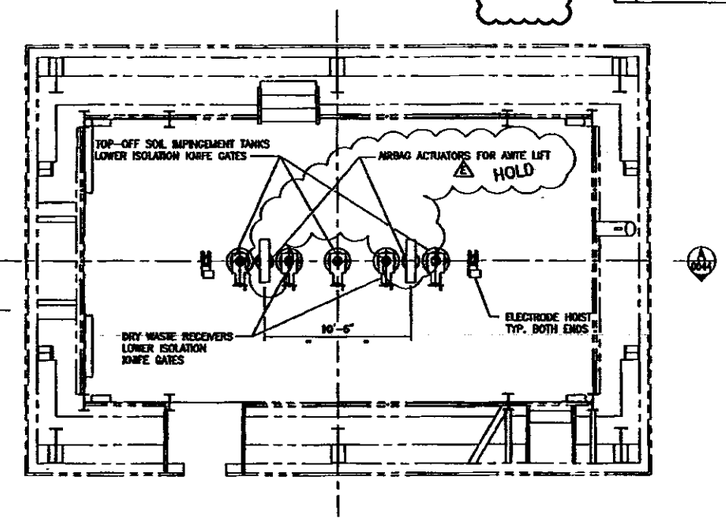

VALVE FLOOR
PLAN @ ELEV. 686'-0"
1/4"=1'-0"

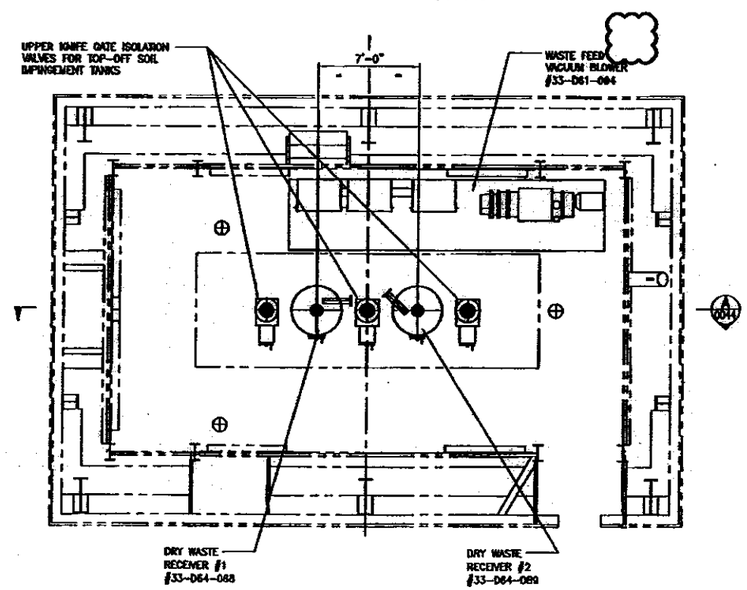

WASTE RECEIVER FLOOR
PLAN @ ELEV. 696'-0"
1/4"=1'-0"

NOT APPROVED FOR CONSTRUCTION

REV	REVISION DESCRIPTION	Date	By	Chk'd	Appr'd	Appr'd
F	ISSUED FOR APPROVAL	01 FEB 06	AS			
E	ISSUED FOR DESIGN	16 DEC 05	RMB		FWS	JDS
D	ISSUED FOR CION WILL APPROVAL/DOE REPORT	08 JUNE 05	RCK	AA	GJ	TH
C	ISSUED FOR 60% WILL REVIEW/APPROVAL	05 NOV 04	RCK		GJ/FS	TH
B	ISSUED FOR INTERNAL APPROVAL	18 OCT 04	KES		FS	JDS
A	ISSUED FOR REVIEW	27 AUG 04	RKB		FS/GJ	TH

F-145579-00-D-0051 REV F

amec

145579-FINAL DBVS DESIGN

U.S. DEPARTMENT OF ENERGY
Office of River Protection

BULK VITRIFICATION
MELT AREA G.A.
PLAN VIEWS

NAME	DATE
DRAWN BY	
DESIGNED BY	
CHECKED BY	
PROJECT / PART MGR	
OPERATIONS MANAGER	
PROJECT MANAGER	
DESIGN AUTHORITY	

SIZE F SCALE 1/4"=1'-0"

DWG NO	TITLE
DRAWING TRACEABILITY LIST	

REF NUMBER	TITLE
NEXT USED ON	REFERENCES

REV	DESCRIPTION	REV BY DATE	CHK'D BY	APPR'D BY	DATE	APPROVED
REVISIONS						

In making requests for transmittal of data by any electronic media, the Company requesting such data agrees that AMEC Americas Limited cannot be held responsible for users of the data outside of or beyond the scope of our original agreement. Also, because data stored in electronic media or transmitted by electronic means can deteriorate undetected or be modified without the consultant's knowledge, the Company receiving data agrees that AMEC Americas Limited cannot be held liable for the compatibility, completeness or correctness of the data.

EIN: 33-D61-094

H.P.: 25
F.L.A.: 34
RPM: 1800

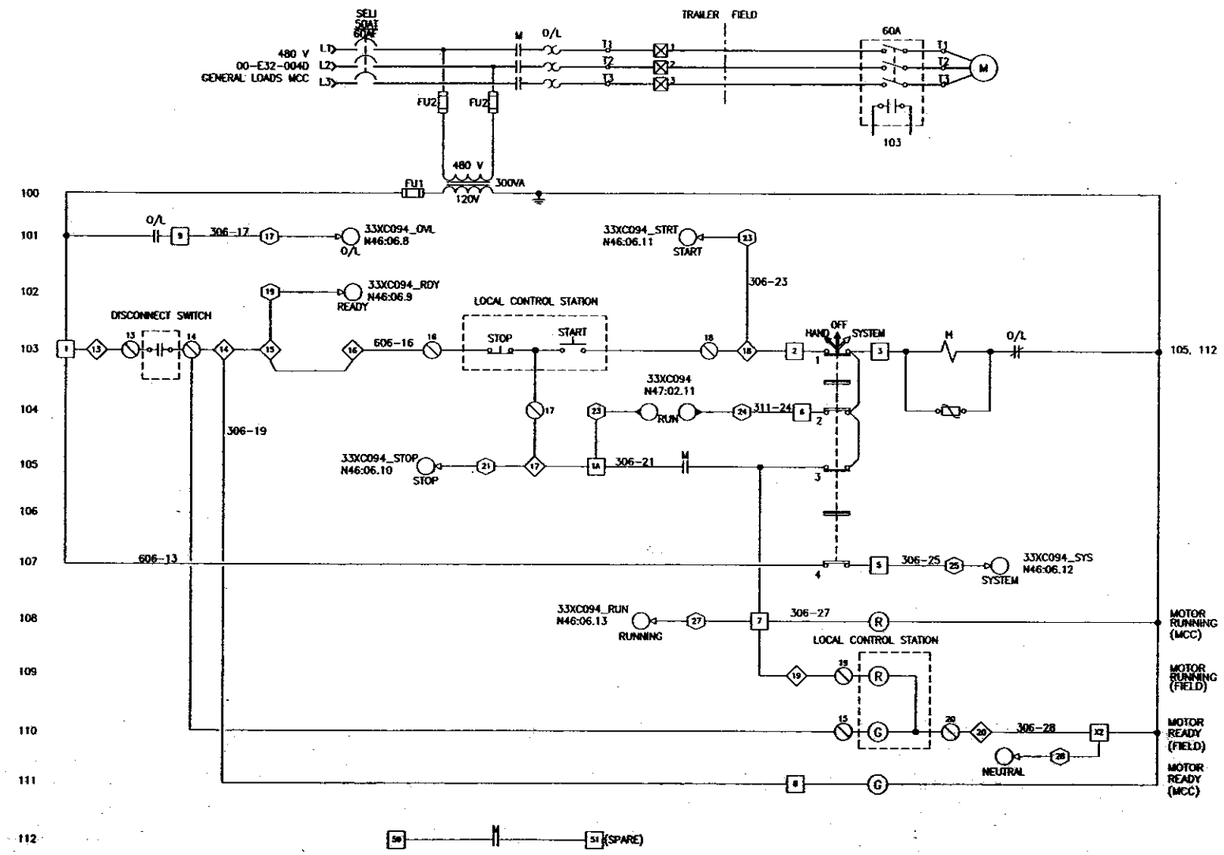

HAND/OFF/SYSTEM

CONTACT	HAND	OFF	SYSTEM
1	X	0	0
2	0	0	X
3	X	0	0
4	0	0	X

X = CLOSED
0 = OPEN

LEGEND

- M — MOTOR
- CONTACTOR RELAY
- STARTER CONTACT
- G — GREEN INDICATING LIGHT
- R — RED INDICATING LIGHT
- START — MOMENTARY PUSH BUTTON SWITCH
- STOP — MOMENTARY PUSH BUTTON SWITCH
- THREE POLE CIRCUIT BREAKER
- SURGE SUPPRESSOR
- 480V TRAILER J.B., PTB315
- 120V TRAILER J.B., TB606
- 120V FIELD J.B., TB814
- TERMINAL BLOCK IN STARTER
- I/O PANEL INPUT TB306, OUTPUT TB311
- PLC OUTPUT
- PLC INPUT
- ANALOG I/O PANEL TERMINAL
- MOTOR OVERLOAD RELAY
- O/L — MOTOR OVERLOAD CONTACTS
- CURRENT TRANSFORMER
- THREE POLE DISCONNECT SWITCH
- HAND OFF SYSTEM — THREE POSITION SELECTOR SWITCH

Rev.	REVISION DESCRIPTION	Date	By	Chk'd	Approved Eng. Mgr.	Approved Proj. Mgr.
C	ISSUED FOR CHEM REMEDI & WASE REPORT	30 Mar 05	MV	BJM	JTA	TH
B	FOR INTERNAL APPROVAL	18 MAR 05	JAA	BJM	JDM	TH
A	FOR INTERNAL REVIEW	09 DEC 04	DCM	BJM	JTA	TH

F-145579-00-E-0139 REV C

amec

145579-FINAL DBVS DESIGN

U.S. DEPARTMENT OF ENERGY
Office of River Protection

BULK VITRIFICATION
WASTE FEED VACUUM BLOWER
SCHEMATIC DIAGRAM

SIZE F — SHEET 1 OF 2

DWG NO	TITLE
-	

DRAWING TRACEABILITY LIST

REF NUMBER	TITLE
-	

REFERENCES
NEXT USED ON

REVISIONS

RPP-24544 REV 1b

In making reports for transmittal of data by any electronic media, the Company receiving such data agrees that AMEC Americas Limited cannot be held responsible for users of the data outside of or beyond the scope of our original agreement. Also, because data stored in electronic media or transmitted by electronic means can deteriorate undetected or be modified without the consultant's knowledge, the Company receiving data agrees that AMEC Americas Limited cannot be held liable for the compatibility, completeness or correctness of the data.

EIN: 33-D61-094
H.P.: 25
F.L.A.: 34
RPM: 1800

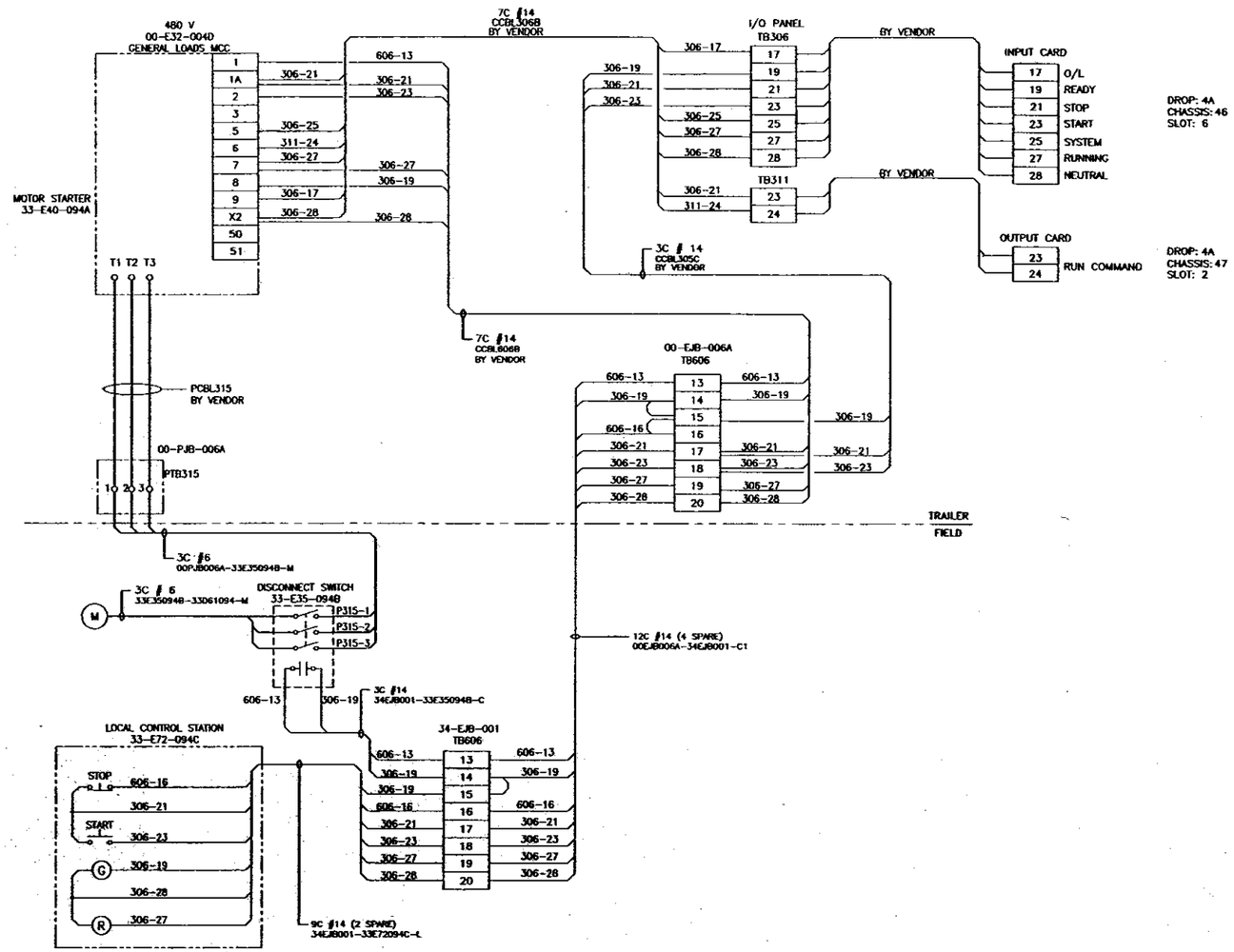

NOTES:
1. ENSURE ALL FIELD INSTALLED INTERCONNECTING CABLES INCORPORATE AN EQUIPMENT GROUNDING CONDUCTOR THAT IS GROUNDED AT BOTH ENDS. EQUIPMENT GROUNDING CONDUCTORS ARE NOT SHOWN ON DRAWING FOR CLARITY.
2. WIRING TO THE PLC DIGITAL I/O CARDS IS #18 AWG.

Rev.	REVISION DESCRIPTION	Date	By	Chk'd	Approved	Eng Mgr
C	ISSUED FOR CH2M REVIEW & 90% REPORT	30 Mar 05	MV	DJM	JRA	TH
B	FOR INTERNAL APPROVAL	18 MAR 05	JRA	DJM	JRM	TH
A	FOR INTERNAL REVIEW	09 DEC 04	BCW	DJM	JRA	TH

AMEC DRAWING NO: F-145579-00-E-0139 REV: C

amec

AMEC PROJECT: 145579-FINAL DBVS DESIGN

U.S. DEPARTMENT OF ENERGY
Office of River Protection

BULK VITRIFICATION
WASTE FEED VACUUM BLOWER
WIRING DIAGRAM

SIZE: F SHEET 2 OF 2

DWG NO	TITLE
DRAWING TRACEABILITY LIST	

REF NUMBER	TITLE
REFERENCES	
NEXT USED ON	

REVISIONS

In making requests for transmittal of data by any electronic media, the Company receiving such data agrees that AMEC Americas Limited cannot be held responsible for users of the data outside of or beyond the scope of our original agreement. Also, because data stored in electronic media or transmitted by electronic means can deteriorate undetected or be modified without the consultant's knowledge, the Company receiving data agrees that AMEC Americas Limited cannot be held liable for the compatibility, completeness or correctness of the data.

EIN: 33-085-095

H.P.: 5
F.L.A.: 7.6
RPM: VARIABLE

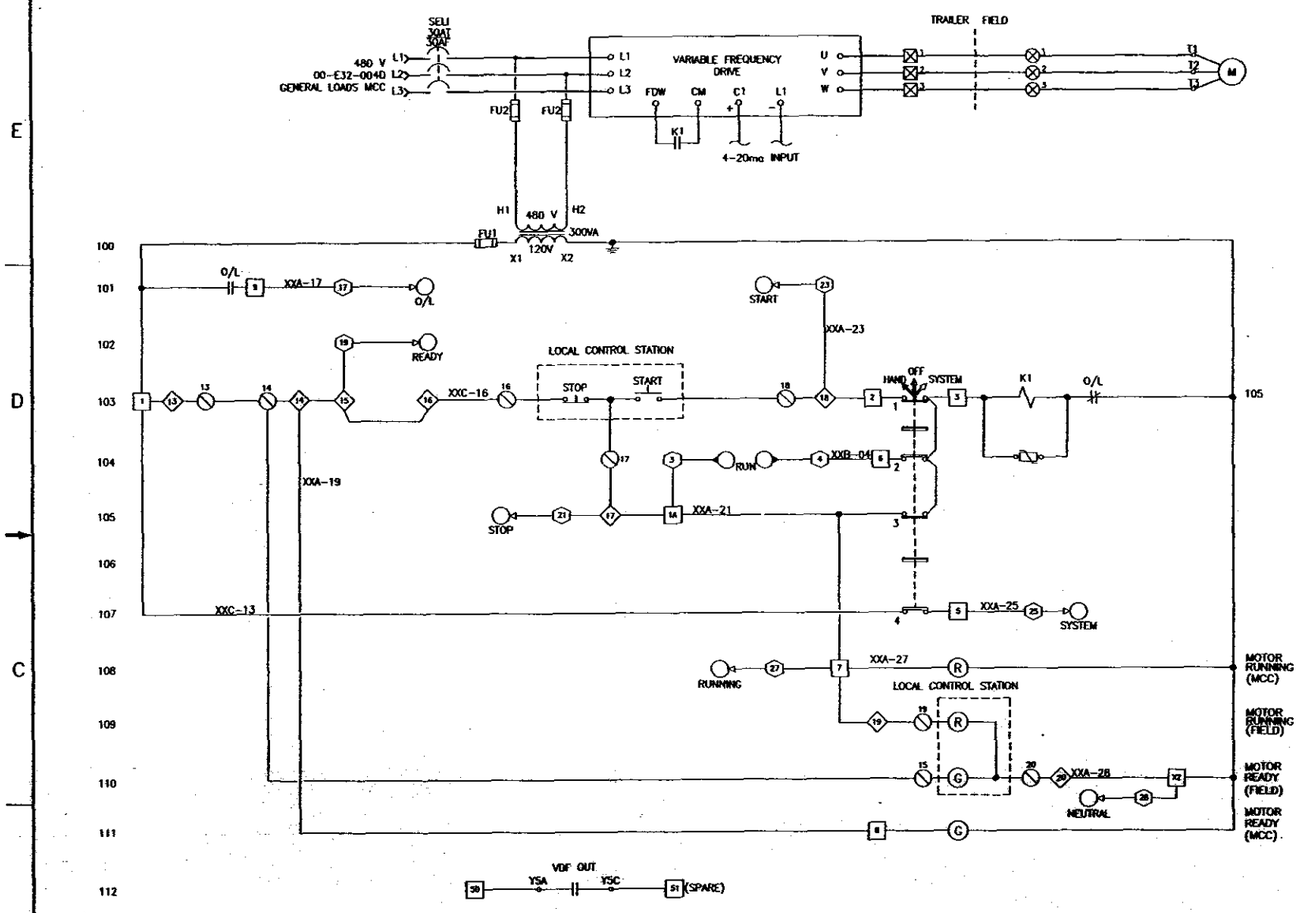

HAND/OFF/SYSTEM

CONTACT	HAND	OFF	SYSTEM
1	X	O	O
2	O	O	X
3	X	O	O
4	O	O	X

X = CLOSED
O = OPEN

LEGEND

- MOTOR
- CONTACTOR RELAY
- STARTER CONTACT
- GREEN INDICATING LIGHT
- RED INDICATING LIGHT
- START MOMENTARY PUSH BUTTON SWITCH
- STOP MOMENTARY PUSH BUTTON SWITCH
- THREE POLE CIRCUIT BREAKER
- SURGE SUPPRESSOR
- 480V TRAILER J.B., PTBXXX
- 120V TRAILER J.B., TBXXC
- 120V FIELD J.B., TBXXX
- FIELD J.B., TBXXX
- TERMINAL BLOCK IN STARTER
- I/O PANEL INPUT TBXXA, OUTPUT TBXXB
- PLC OUTPUT
- PLC INPUT
- ANALOG I/O PANEL TERMINAL
- MOTOR OVERLOAD RELAY
- MOTOR OVERLOAD CONTACTS
- CURRENT TRANSFORMER
- THREE POLE DISCONNECT SWITCH
- HAND OFF SYSTEM THREE POSITION SELECTOR SWITCH

HOLD FOR VENDOR TERMINAL AND WIRE NUMBERING

Rev.	REVISION DESCRIPTION	Date	By	Ch'd	Approved Mgr. Lead	Approved Eng. Mgr.
C	ISSUED FOR CH2M REVIEW & 90% REPORT	30 Mar 05	MV	DJM	JRA	TN
B	FOR INTERNAL APPROVAL	22 Mar 05	JAA	JDM	JDM	TN
A	FOR INTERNAL REVIEW	18 MAR 05	JAA	DJM	JDM	TN

AMEC DRAWING NO: F-145579-00-E-0174 REV: C

amec

AMEC PROJECT: 145579-FINAL DBVS DESIGN

U.S. DEPARTMENT OF ENERGY
Office of River Protection

BULK VITRIFICATION
WASTE RECEIVER AIRLOCK
SCHEMATIC DIAGRAM

SIZE: F SCALE: SHEET 1 OF 2

DWG NO	TITLE
DRAWING TRACEABILITY LIST	

REF NUMBER	TITLE
NEXT USED ON	REFERENCES

REVISIONS

RPP-24544 REV 1b

In making requests for transmittal of data by any electronic media, the Company receiving such data agrees that AMEC Americas Limited cannot be held responsible for users of the data outside of or beyond the scope of our original agreement. Also, because data stored in electronic media or transmitted by electronic means can deteriorate undetected or be modified without the consultant's knowledge, the Company receiving data agrees that AMEC Americas Limited cannot be held liable for the compatibility, completeness or correctness of the data.

EIN: 33-D85-095
H.P.: 5
F.L.A.: 7.8
RPM: VARIABLE

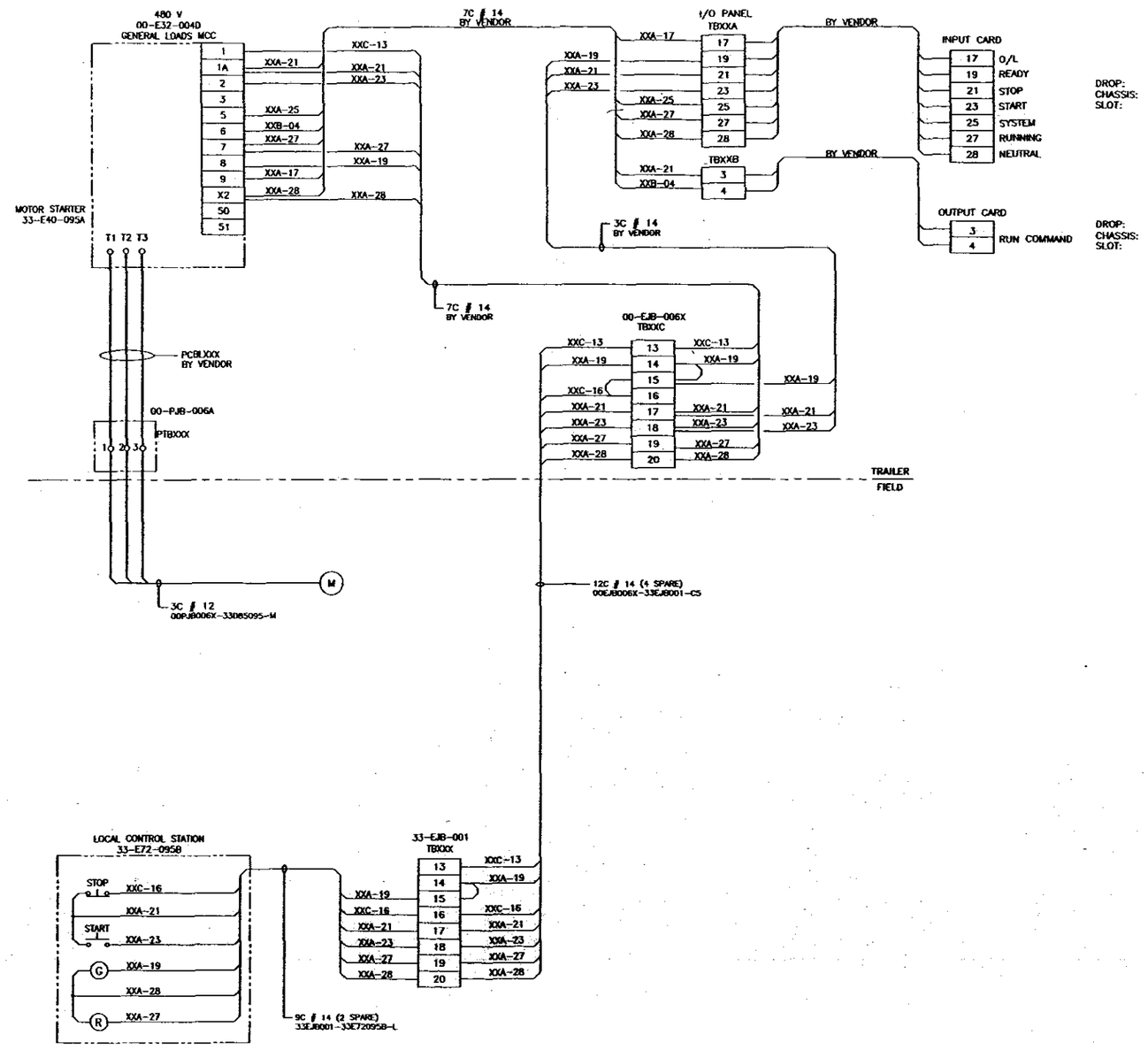

NOTES:
1. ENSURE ALL FIELD INSTALLED INTERCONNECTING CABLES INCORPORATE AN EQUIPMENT GROUNDING CONDUCTOR THAT IS GROUNDED AT BOTH ENDS. EQUIPMENT GROUNDING CONDUCTORS ARE NOT SHOWN ON DRAWING FOR CLARITY.
2. WIRING TO THE PLC DIGITAL I/O CARDS IS #18 AWG.

HOLD FOR VENDOR TERMINAL AND WIRE NUMBERING

Rev.	REVISION DESCRIPTION	Date	By	Chk'd	Approved Eng. Mgr.	Approved Proj. Mgr.
C	ISSUED FOR CH2M REVIEW & 90% REPORT	30 Mar 05	MV	DJM	JKA	TH
B	FOR INTERNAL APPROVAL	22 Mar 05	JKA	JDM	JDM	TH
A	FOR INTERNAL REVIEW	18 Mar 05	JKA	DJM	JDM	TH

DWG NO F-145579-00-E-0174 REV C

amec

145579-FINAL DBVS DESIGN

U.S. DEPARTMENT OF ENERGY
Office of River Protection

BULK VITRIFICATION
WASTE RECEIVER AIRLOCK
WIRING DIAGRAM

SIZE F

SHEET 2 OF 2

DWG NO	TITLE
DRAWING TRACEABILITY LIST	

REF NUMBER	TITLE
NEXT USED ON	REFERENCES

REVISIONS

RPP-24544 REV 1b

In making requests for transmittal of data by any electronic media, the Company receiving such data agrees that AMEC Americas Limited cannot be held responsible for users of the data outside of or beyond the scope of our original agreement. Also, because data stored in electronic media or transmitted by electronic means can deteriorate undetected or be modified without the consultant's knowledge, the Company receiving data agrees that AMEC Americas Limited cannot be held liable for the compatibility, completeness or correctness of the data.

EIN: 33-D85-090

H.P.: 0.75
F.L.A.: 1.6
RPM: 1800

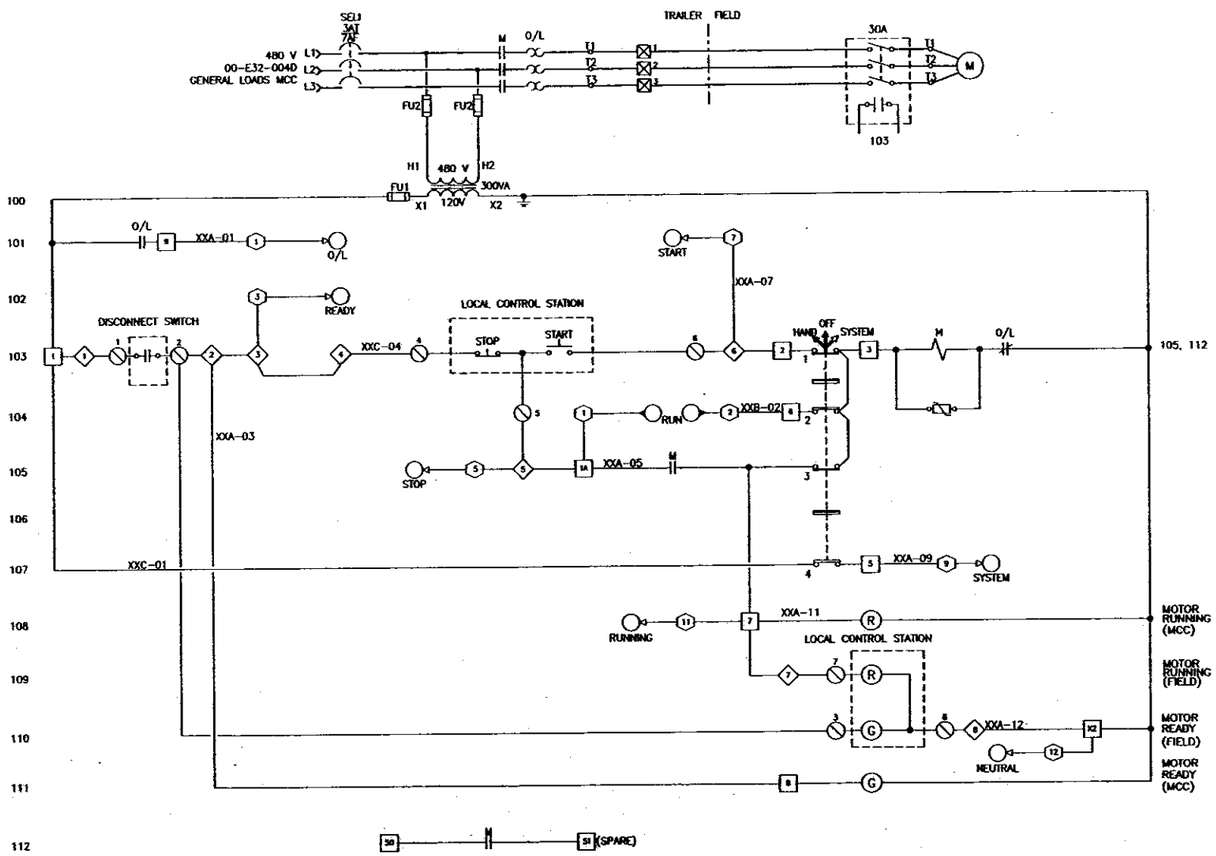

HAND/OFF/SYSTEM

CONTACT	HAND	OFF	SYSTEM
1	X	0	0
2	0	0	X
3	X	0	0
4	0	0	X

X = CLOSED
0 = OPEN

LEGEND

- M — MOTOR
- CONTACTOR RELAY
- STARTER CONTACT
- G — GREEN INDICATING LIGHT
- R — RED INDICATING LIGHT
- START — MOMENTARY PUSH BUTTON SWITCH
- STOP — MOMENTARY PUSH BUTTON SWITCH
- THREE POLE CIRCUIT BREAKER
- SURGE SUPPRESSOR
- 480V TRAILER J.B., PTBXXA
- 120V TRAILER J.B., TBXXB
- 120V FIELD J.B., TBXXC
- TERMINAL BLOCK IN STARTER
- I/O PANEL INPUT TBXXA, OUTPUT TBXXB
- PLC OUTPUT
- PLC INPUT
- ANALOG I/O PANEL TERMINAL
- MOTOR OVERLOAD RELAY
- O/L — MOTOR OVERLOAD CONTACTS
- CURRENT TRANSFORMER
- THREE POLE DISCONNECT SWITCH
- HAND OFF SYSTEM — THREE POSITION SELECTOR SWITCH

HOLD FOR VENDOR TERMINAL AND WIRE NUMBERING

Rev.	REVISION DESCRIPTION	Date	By	Chk'd	Approved	Approved for Release
C	ISSUED FOR CH2M REVIEW & 90% REPORT	30 Mar 05	MV	BJM	JDA	TN
B	FOR INTERNAL APPROVAL	22 Mar 05	JNA	JDM	JDM	TN
A	FOR INTERNAL REVIEW	15 MAR 05	JNA	BJM	JDM	TN

AMEC DRAWING NO: F-145579-00-E-0175 REV: C

amec

AMEC PROJECT: 145579-FINAL DBVS DESIGN

U.S. DEPARTMENT OF ENERGY
Office of River Protection

BULK VITRIFICATION
DRY WST REC 1 ROT AIRLOCK
SCHEMATIC DIAGRAM

SIZE F — SHEET 1 of 2

NAME

DRAWING TRACEABILITY LIST: DWG NO | TITLE

REFERENCES: REF NUMBER | TITLE | NEXT USED ON

REVISIONS: REV NO | DESCRIPTION

RPP-24544 REV 1b

In making requests for transmittal of data by any electronic media, the Company receiving such data agrees that AMEC Americas Limited cannot be held responsible for users of the data outside of or beyond the scope of our original agreement. Also, because data stored in electronic media or transmitted by electronic means can deteriorate undetected or be modified without the consultant's knowledge, the Company receiving data agrees that AMEC Americas Limited cannot be held liable for the compatibility, completeness or correctness of the data.

EIN: 33-D85-090

H.P.: 0.75
F.L.A.: 1.6
RPM: 1800

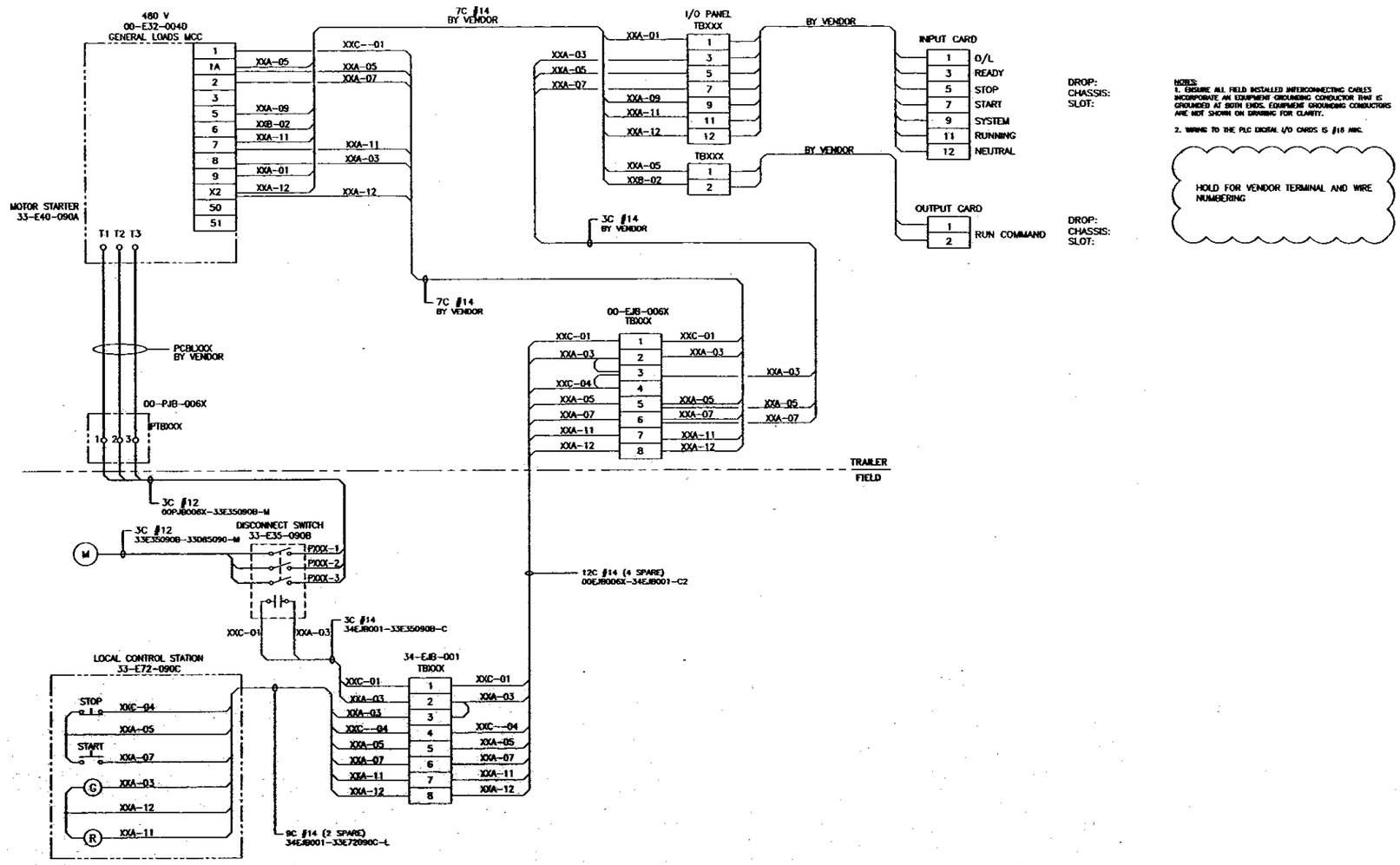

NOTES:
1. ENSURE ALL FIELD INSTALLED INTERCONNECTING CABLES INCORPORATE AN EQUIPMENT GROUNDING CONDUCTOR THAT IS GROUNDED AT BOTH ENDS. EQUIPMENT GROUNDING CONDUCTORS ARE NOT SHOWN ON DRAWING FOR CLARITY.
2. WIRING TO THE PLC DIGITAL I/O CARDS IS #18 AWG.

HOLD FOR VENDOR TERMINAL AND WIRE NUMBERING

Rev.	REVISION DESCRIPTION	Date	By	Chk'd	Approved Eng Mgr	Approved Proj Mgr
C	ISSUED FOR CH2M REVIEW & 90% REPORT	30 Mar 05	MY	DJM	JRA	TH
B	FOR INTERNAL APPROVAL	22 Mar 05	JRA	JDM	JDM	TH
A	FOR INTERNAL REVIEW	18 MAR 05	JRA	DJM	JDM	TH

AMEC Drawing no: F-145579-00-E-0175 REV C

amec

AMEC PROJECT: 145579-FINAL DBVS DESIGN

U.S. DEPARTMENT OF ENERGY
Office of River Protection

BULK VITRIFICATION
DRY WST REC 1 ROT AIRLOCK
WIRING DIAGRAM

SIZE F

SHEET 2 OF 2

NAME	DATE
DRAWN BY	
DESIGNED BY	
CHECKED BY	
DESIGN / REVIEW LEAD	
DISCIPLINE ENGINEER	
PROJECT ENGINEER	
PROJECT MANAGER	

DWG NO	TITLE
DRAWING TRACEABILITY LIST	

REF NUMBER	TITLE
REFERENCES	
NEXT USED ON	

REV	DESCRIPTION	DATE	CHECKED BY	APPROVED BY	NOTE
REVISIONS					

RPP-24544 REV 1b

In making requests for transmittal of data by any electronic media, the Company receiving such data agrees that AMEC Americas Limited cannot be held responsible for users of the data outside of or beyond the scope of our original agreement. Also, because data stored in electronic media or transmitted by electronic means can deteriorate undetected or be modified without the consultant's knowledge, the Company receiving data agrees that AMEC Americas Limited cannot be held liable for the compatibility, completeness or correctness of the data.

EIN: 33-E85-091

H.P.: 0.75
F.L.A.: 1.6
RPM: 1800

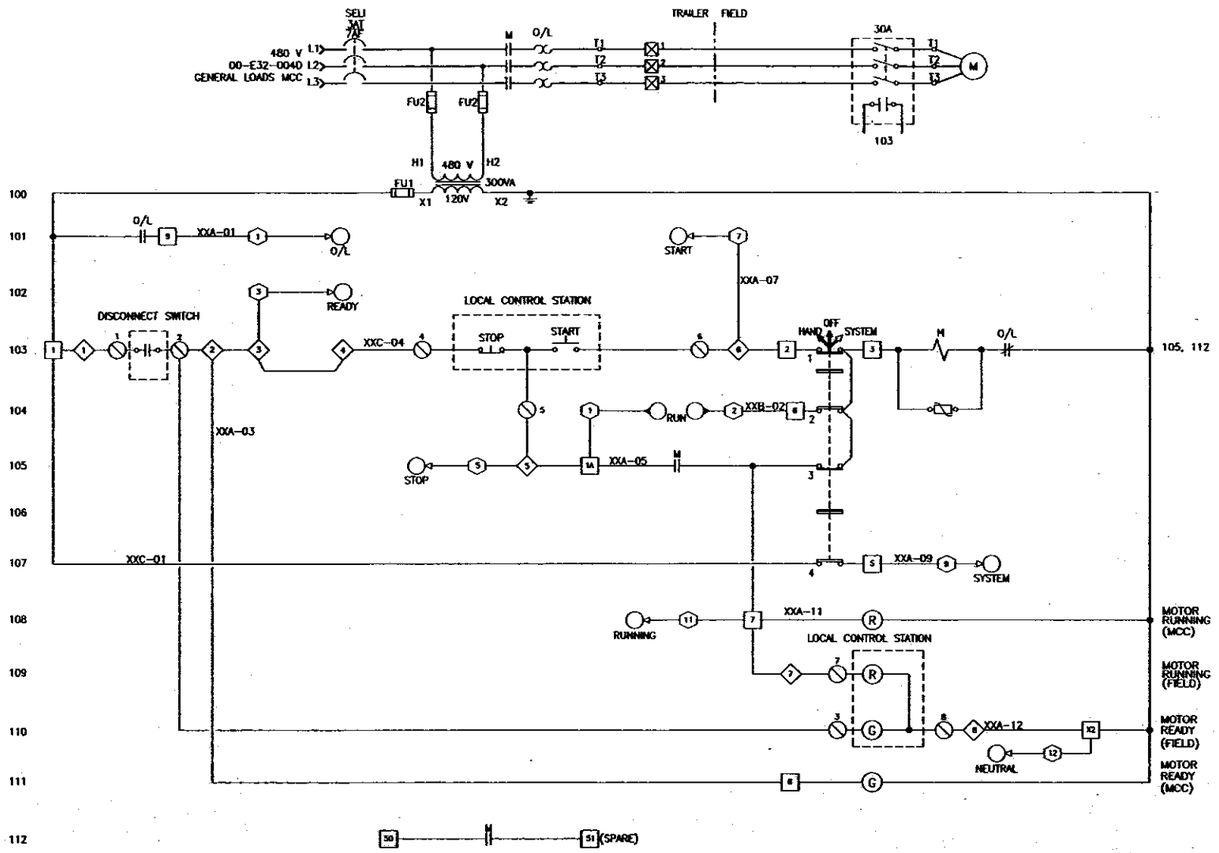

HAND/OFF/SYSTEM

CONTACT	HAND	OFF	SYSTEM
1	X	0	0
2	0	0	X
3	X	0	0
4	0	0	X

X = CLOSED
0 = OPEN

LEGEND

- M — MOTOR
- M — CONTACTOR RELAY
- M — STARTER CONTACT
- G — GREEN INDICATING LIGHT
- R — RED INDICATING LIGHT
- START — MOMENTARY PUSH BUTTON SWITCH
- STOP — MOMENTARY PUSH BUTTON SWITCH
- THREE POLE CIRCUIT BREAKER
- SURGE SUPPRESSOR
- 480V TRAILER J.B., PTBXXA
- 120V TRAILER J.B., TBXXB
- 120V FIELD J.B., TBXXC
- TERMINAL BLOCK IN STARTER
- I/O PANEL INPUT TBXXA, OUTPUT TBXXB
- PLC OUTPUT
- PLC INPUT
- ANALOG I/O PANEL TERMINAL
- MOTOR OVERLOAD RELAY
- O/L — MOTOR OVERLOAD CONTACTS
- CURRENT TRANSFORMER
- THREE POLE DISCONNECT SWITCH
- HAND OFF SYSTEM — THREE POSITION SELECTOR SWITCH

HOLD FOR VENDOR TERMINAL AND WIRE NUMBERING

Rev.	REVISION DESCRIPTION	Date	By	Chk'd	Approved	Approved
C	ISSUED FOR CH2M REVIEW & 90% REPORT	30 Mar 05	MV	DJM	JDh	TH
B	FOR INTERNAL APPROVAL	22 Mar 05	JAA	JDM	JDM	TH
A	FOR INTERNAL REVIEW	18 MAR 05	JAA	DJM	JDM	TH

F-145579-00-E-0176 REV. C

amec

NAME

145579-FINAL DBVS DESIGN

U.S. DEPARTMENT OF ENERGY
Office of River Protection

BULK VITRIFICATION
DRY WST REC 2 ROT AIRLOCK
SCHEMATIC DIAGRAM

SIZE F — SHEET 1 of 2

DWG NO	TITLE
DRAWING TRACEABILITY LIST	

REF NUMBER	TITLE
REFERENCES	
NEXT USED ON	

REVISIONS

RPP-24544 REV 1b

In making requests for transmittal of data by any electronic media, the Company receiving such data agrees that AMEC Americas Limited cannot be held responsible for users of the data outside of or beyond the scope of our original agreement. Also, because data stored in electronic media or transmitted by electronic means can deteriorate undetected or be modified without the consultant's knowledge, the Company receiving data agrees that AMEC Americas Limited cannot be held liable for the compatibility, completeness or correctness of the data.

EIN: 33-D85-091

H.P.: 0.75

F.L.A.: 1.6

RPM: 1800

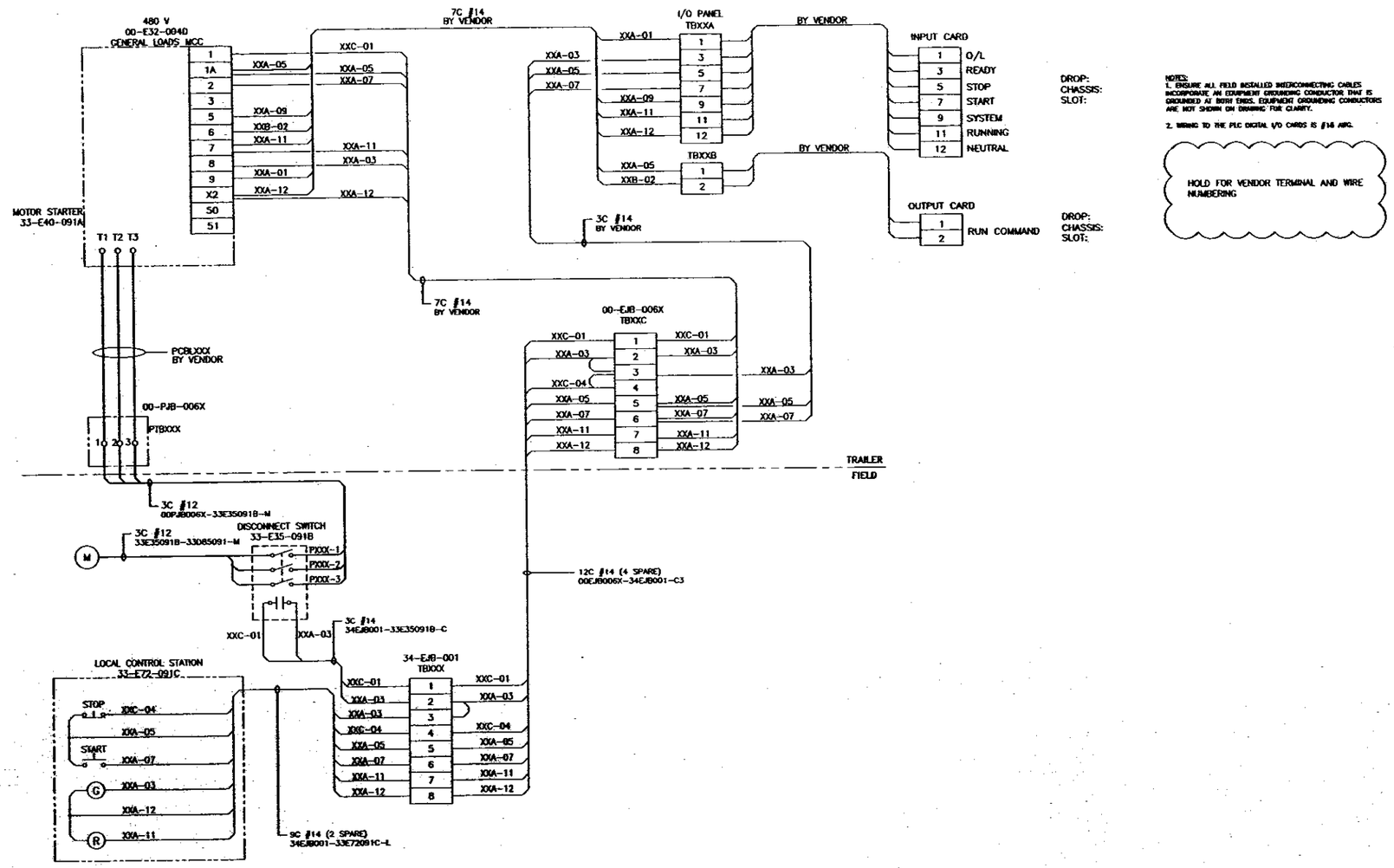

NOTES:
1. ENSURE ALL FIELD INSTALLED INTERCONNECTING CABLES INCORPORATE AN EQUIPMENT GROUNDING CONDUCTOR THAT IS GROUNDED AT BOTH ENDS. EQUIPMENT GROUNDING CONDUCTORS ARE NOT SHOWN ON DRAWING FOR CLARITY.
2. WIRING TO THE PLC DIGITAL I/O CARDS IS #16 AWG.

HOLD FOR VENDOR TERMINAL AND WIRE NUMBERING

Rev.	REVISION DESCRIPTION	Date	By	Chk'd	Appvd	Appvd
C	ISSUED FOR CH2M REVIEW & 90% REPORT	30 Mar 05	MV	DJN	JSA	JN
B	FOR INTERNAL APPROVAL	22 Mar 05	JSA	JDM	JDM	JN
A	FOR INTERNAL REVIEW	16 MAR 05	JNA	DJM	JDM	JN

AMEC DRAWING NO: F-145579-00-E-0176 REV: C

amec

AMEC PROJECT: 145579-FINAL DBVS DESIGN

U.S. DEPARTMENT OF ENERGY
Office of River Protection

BULK VITRIFICATION
DRY WST REC 2 ROT AIRLOCK
WIRING DIAGRAM

SIZE: F SHEET 2 of 2

DWG NO	TITLE
-	

DRAWING TRACEABILITY LIST

REF NUMBER	TITLE
-	

REFERENCES — NEXT USED ON

REV NO	REV DATE	DESCRIPTION	REV BY	REV DATE	CHECKED BY	CHECK DATE
-						

REVISIONS

RPP-24544 REV 1b

No.	AMEC Dwg. No.	REFERENCE DRAWINGS
1	F-145579-34-D-0006	CHURE LAYOUT ~ WASTE SILO TO ICV BOX
2	F-145579-34-D-0003	CHURE LAYOUT ~ TOP-OFF SOIL IMPINGEMENT TANK TO ICV BOX
3	F-145579-00-D-0044	MELT AREA G.A. SECTIONS
4	F-145579-00-D-0041	MELT AREA G.A. ELEVATIONS NORTH & WEST
5	F-145579-34-D-0001	AREA 34 ~ WASTE TRANSFER AWRE DETAILS & ELEVATIONS
6	F-145579-00-B-0007	MELT AREA ~ GRATING & FLOOR PLATE LAYOUT

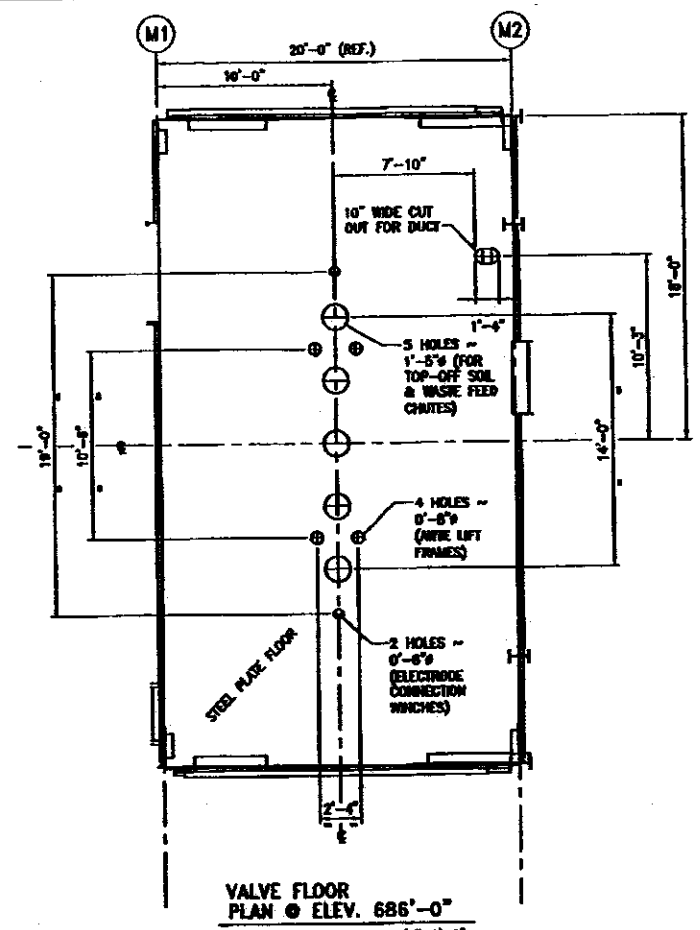

VALVE FLOOR
PLAN @ ELEV. 686'-0"
1/4"=1'-0"

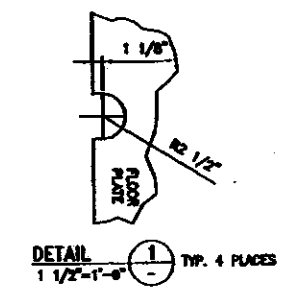

DETAIL 1 (1/1) TYP. 4 PLACES
1 1/2"=1'-0"

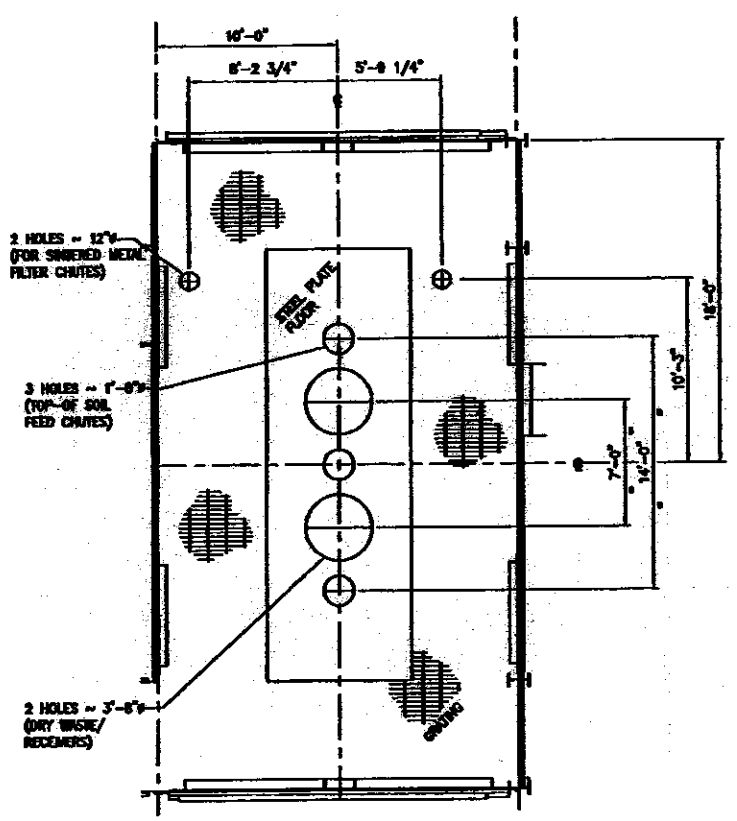

WASTE RECEIVER FLOOR
PLAN @ ELEV. 696'-0"
1/4"=1'-0"

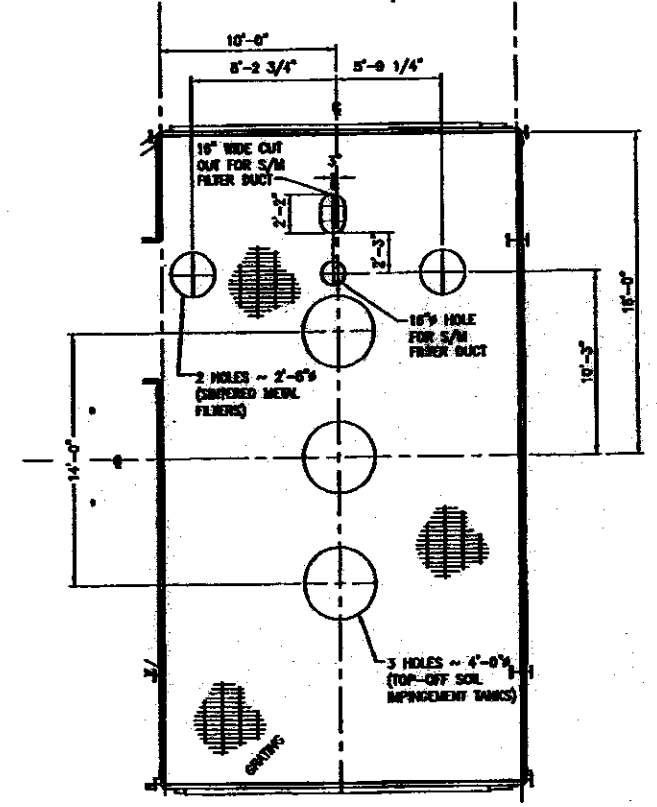

IMPINGEMENT FLOOR
PLAN @ ELEV. 705'-10 1/4"
1/4"=1'-0"

NOT APPROVED FOR CONSTRUCTION

Rev.	Description	Date	By	Chk'd	Appr.
C	ISSUED FOR APPROVAL	[illegible]	AL		
B	ISSUED FOR CONSTRUCTION/ REVIEW/SUB. REPORT	[illegible]	[illegible]	AL	[illegible]
A	ISSUED FOR INFORMATION	[illegible]	[illegible]		[illegible]

F-145579-34-D-0010 C

amec

145579-FINAL DBVS DESIGN

U.S. DEPARTMENT OF ENERGY
Office of River Protection

BULK VITRIFICATION
AREA 34 ~ WASTE TRANSFER
HOLES IN FLOOR PLATES

F

SCALE AS NOTED

DWG NO	TITLE
DRAWING TRACEABILITY LIST	

REF NUMBER	TITLE
REFERENCES	
NEXT USED ON	

REVISIONS

In making requests for transmittal of data by any electronic media, the Company receiving such data agrees that AMEC Americas Limited cannot be held responsible for users of the data outside of or beyond the scope of our original agreement. Also, because data stored in electronic media or transmitted by electronic means can deteriorate undetected or be modified without the consultant's knowledge, the Company receiving data agrees that AMEC Americas Limited cannot be held liable for the compatibility, completeness or correctness of the data.

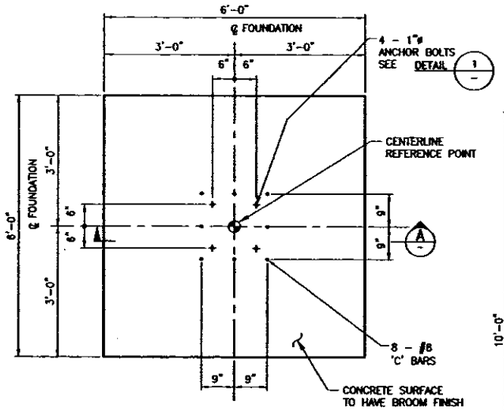

TYPE 'A' FDN – PLAN
(59 REQUIRED) 3/4"=1'-0"

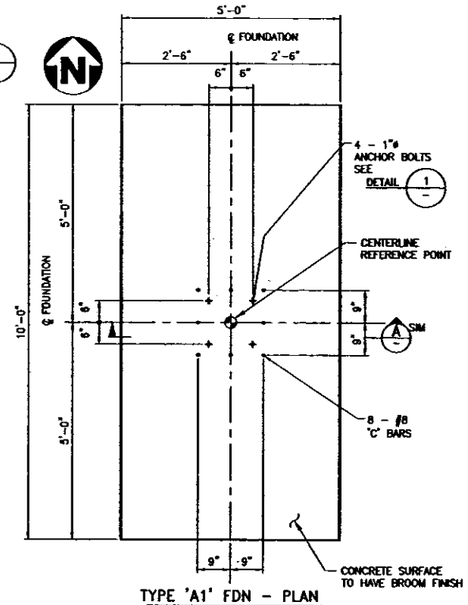

TYPE 'A1' FDN – PLAN
(2 REQUIRED) 3/4"=1'-0"

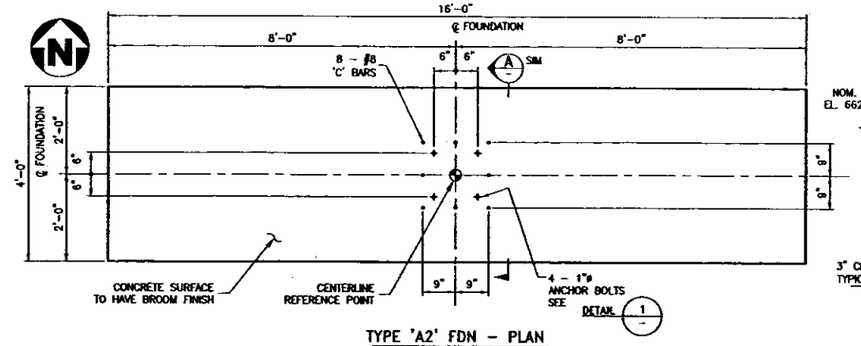

TYPE 'A2' FDN – PLAN
(3 REQUIRED) 3/4"=1'-0"

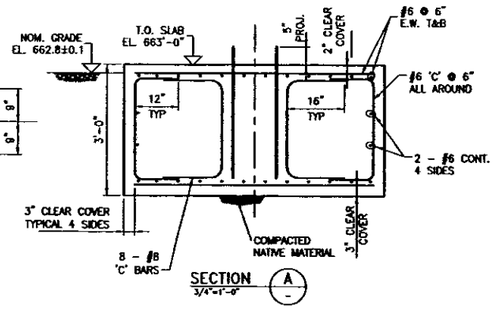

SECTION A
3/4"=1'-0"

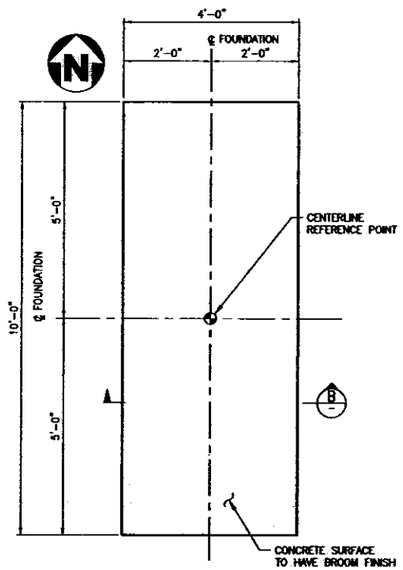

MELT AREA STAIR SUPPORTS
TYPE 'S1' FDN – PLAN
(1 REQUIRED) 3/4"=1'-0"

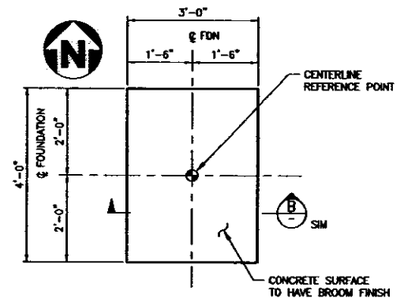

DRYER AREA – STAIR LANDING
TYPE 'S3' FDN – PLAN
(1 REQUIRED) 3/4"=1'-0"

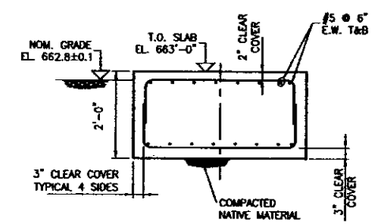

SECTION B
3/4"=1'-0"

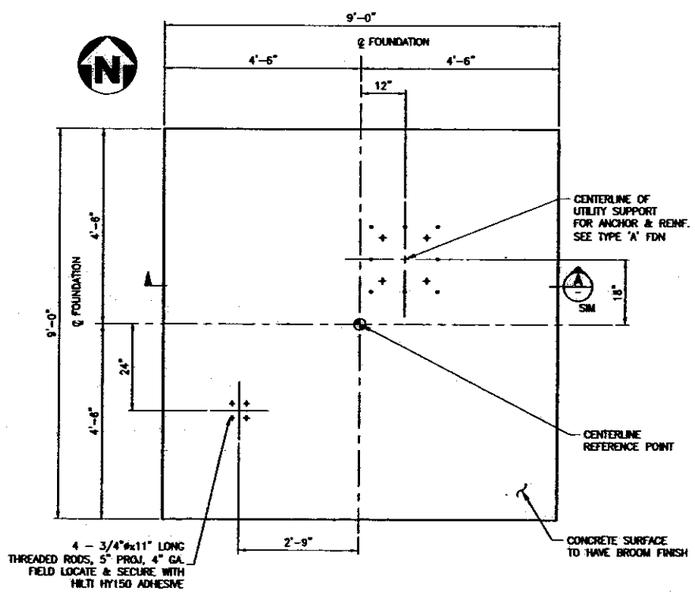

MELT AREA COMBINED
STAIR & UTILITY SUPPORT
TYPE 'S2' FDN – PLAN
(1 REQUIRED) 3/4"=1'-0"

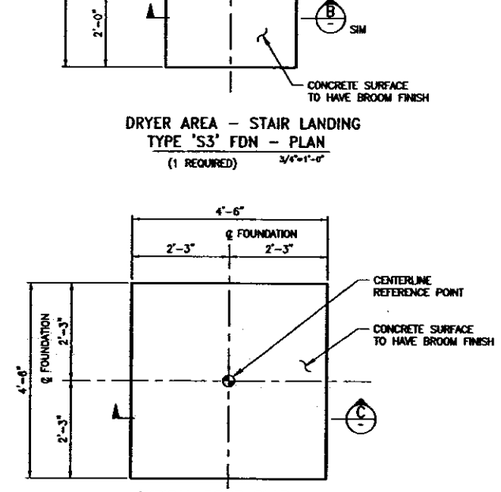

TYPICAL DOOR SLAB
TYPE 'S4' FDN – PLAN
(7 REQUIRED) 3/4"=1'-0"

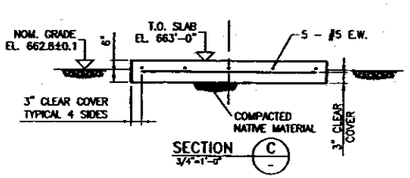

SECTION C
3/4"=1'-0"

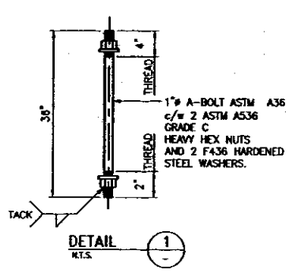

DETAIL 1
N.T.S.

4 REQ'D PER TYPE "A","A1","A2" & "S2" FDN

NOTES:

FOR GENERAL NOTES REFER TO DRAWING H-14-106789 "BULK VITRIFICATION – CIVIL SITE IMPROVEMENTS"

FOR DESIGN CRITERIA & MATERIAL SPECIFICATIONS SEE CONSTRUCTION SPECIFICATION 145579-G-SP-001.

1. FOR FOUNDATION LOCATIONS SEE DRAWING H-14-106798.

2. STAIR SUPPORTS AND LANDINGS TO BE SECURED TO FOUNDATIONS WITH DRILLED AND GROUTED ANCHORS. (REFER TO STEEL DRAWINGS F-145579-00-B-0006 & F-145579-00-B-0009 FOR ANCHOR SIZE REQUIREMENTS) ANCHORS TO BE ASTM A36 RODS C/W 1-ASTM A563 HEAVY HEX GRADE C NUT AND 1-ASTM F436 HARDENED STEEL WASHER. SECURE ANCHORS WITH HILTI HY-150 ADHESIVE IN ACCORDANCE WITH MANUFACTURER'S WRITTEN INSTRUCTIONS.

3. CONCRETE SHALL CONFORM TO CONSTRUCTION SPECIFICATION 145579-G-SP-001 SECTION 3300 "CAST-IN-PLACE CONCRETE".

THE FOLLOWING SPECIFIC REQUIREMENTS APPLY TO CAST-IN-PLACE CONCRETE. REFER TO CONSTRUCTION SPECIFICATION 145579-Q-SP-001 FOR DETAILS.

a) MINIMUM COMPRESSIVE STRENGTH @ 28 DAYS = 4000 PSI.
b) MAXIMUM WATER/CEMENT RATIO = 0.5
c) AIR CONTENT SHALL BE 5% – 8%.
d) CONSTRUCTION AND CONTRACTION JOINTS SHALL BE PER ACI 224.3R AND ACI 302.1R.

4. COMPACTION OF NATIVE MATERIAL SHALL CONFORM TO CONSTRUCTION SPECIFICATION 145579-C-SP-001 SECTION 02220.

5. FOR UTILITY SUPPORT FOUNDATION DESIGN SEE CALCULATION 145579-B-CA-003.

Rev.	REVISION DESCRIPTION	Date	By	Chk'd	Approved Eng Mgr	Approved Proj Mgr
0	ISSUED FOR CONSTRUCTION	13 APR 05	DPK		PM	TH
G	ISSUED FOR CH2M HILL APPROVAL & 90% REPORT	01 APR 05	DPK		PM	TH
F	ISSUED FOR CH2M HILL APPROVAL & 90% REPORT	22 FEB 05	DPK		PM	TH
E	ISSUED FOR CH2M HILL APPROVAL & 90% REPORT	07 FEB 05	DPK		PM	TH
D	ISSUED FOR CH2M HILL APPROVAL	27 JAN 05	DPK		PM	TH
C	ISSUED FOR CH2M HILL REVIEW	7 DEC 04	DPK		PM	TH
B	ISSUED FOR INTERNAL APPROVAL	29 NOV 04	DPK		PM	TH
A	ISSUED FOR INTERNAL REVIEW	16 NOV 04	DPK		PM	TH

DWG NO: H-14-106799 REV: 0

amec

AMEC PROJECT: 145579-FINAL DBVS DESIGN

U.S. DEPARTMENT OF ENERGY
Office of River Protection

BULK VITRIFICATION
MINOR FOUNDATIONS
PLANS & DETAILS

NAME	DATE
D. P. Kroeker	07 APR 05
D.L. Whitney	05 APR 05
P. Mayer	05 APR 05
P. Mayer	05 APR 05
T. Hahn	05 APR 05
T. Hahn	05 APR 05

DWG NO	TITLE
–	DRAWING TRACEABILITY LIST

REF NUMBER	TITLE
–	REFERENCES
NEXT USED ON	

REV NO	DESCRIPTION	REV BY	REV DATE	CHECKED BY	DATE
–	REVISIONS				

F241G0110 H-14-106799 0
SCALE AS NOTED DWG 821582 SHEET 1 OF 1

RPP-24544 REV 1b

APPENDIX D4

DRIED WASTE HANDLING SYSTEM

Drawing Number	Revision	Title	Page
F-145579-33-A-0100*	R	Bulk Vitrification Waste Dryer P&ID	D4-3
F-145579-33-A-0106	H	Bulk Vitrification Waste Feed Dryer to Box P&ID	D4-4
F-145579-34-A-0101	J	Bulk Vitrification AWTE Hood & Waste Feed P&ID	D4-5
F-145579-35-A-0100	N	Bulk Vitrification ICV Box P&ID	D4-6

*Current revision different than submitted in the Waste Dryer System Design Review Package. Included in the Dried Waste Handling System Design Package to assist review and to show instrumentation associated with control of dry material feed to the ICV System.

This page intentionally left blank.

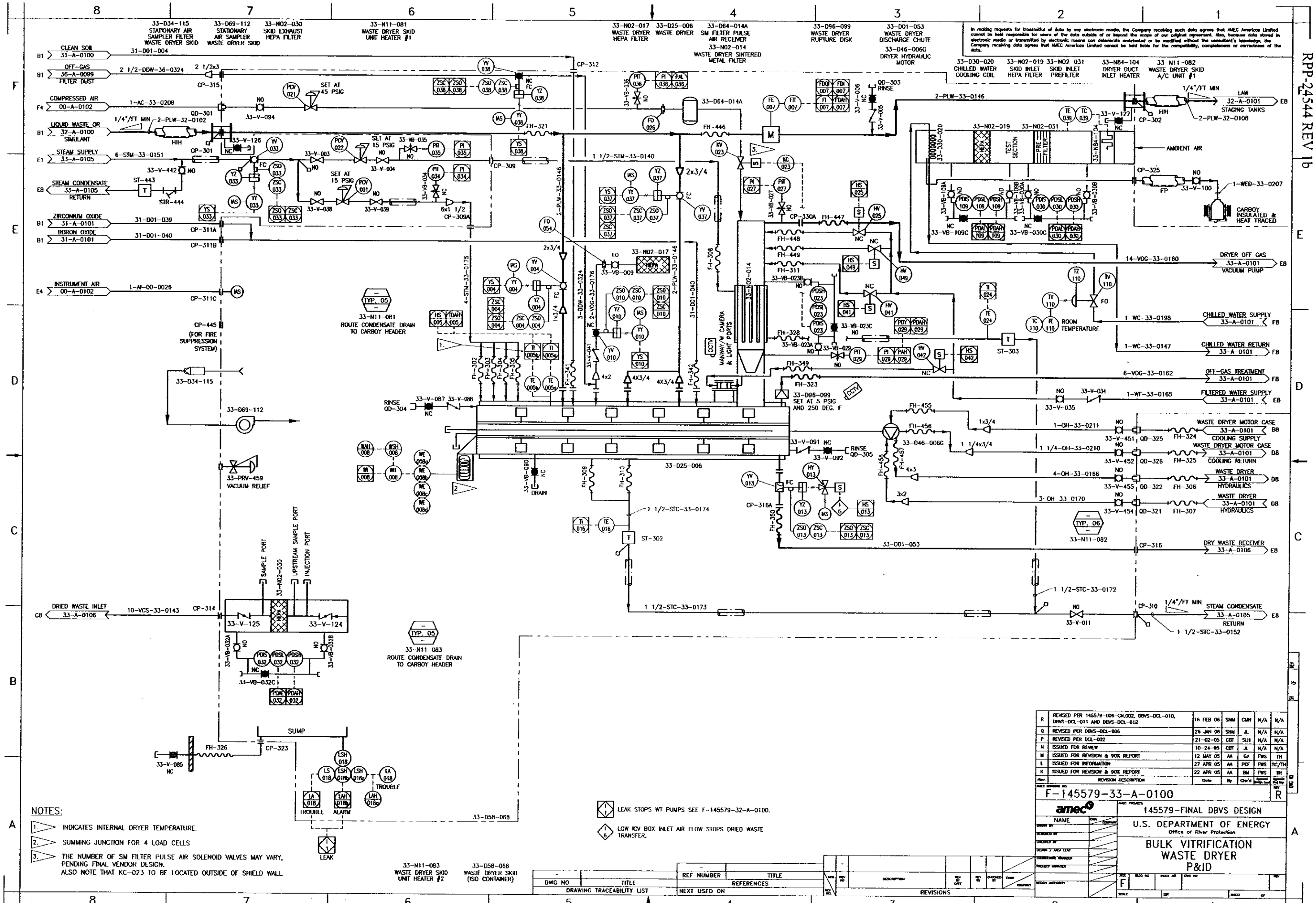

NOTES:

1. INDICATES INTERNAL DRYER TEMPERATURE.
2. SUMMING JUNCTION FOR 4 LOAD CELLS
3. THE NUMBER OF SM FILTER PULSE AIR SOLENOID VALVES MAY VARY, PENDING FINAL VENDOR DESIGN. ALSO NOTE THAT KC-023 TO BE LOCATED OUTSIDE OF SHIELD WALL.

In making requests for transmittal of data by any electronic media, the Company receiving such data agrees that AMEC Americas Limited cannot be held responsible for users of the data outside of or beyond the scope of our original agreement. Also, because data stored in electronic media or transmitted by electronic means can deteriorate undetected or be modified without the consultant's knowledge, the Company receiving data agrees that AMEC Americas Limited cannot be held liable for the compatibility, completeness or correctness of the data.

Rev.	Revision Description	Date	By	Chk'd	Approved Design Lead	Approved Proj Eng
R	REVISED PER 145579-006-CM.002, DBVS-DCL-010, DBVS-DCL-011 AND DBVS-DCL-012	16 FEB 06	SNM	CMM	N/A	N/A
Q	REVISED PER DBVS-DCL-006	26 JAN 06	SNM	JL	N/A	N/A
P	REVISED PER DCL-002	21-02-05	CBT	SJH	N/A	N/A
N	ISSUED FOR REVIEW	10-24-05	CBT	JL	N/A	N/A
M	ISSUED FOR REVISION & 90% REPORT	12 MAY 05	AA	GJ	FWS	TH
L	ISSUED FOR INFORMATION	27 APR 05	AA	PCF	FWS	SC/TH
K	ISSUED FOR REVISION & 90% REPORT	22 APR 05	AA	BM	FWS	TH

RPP-24544 REV 1b

D4-3

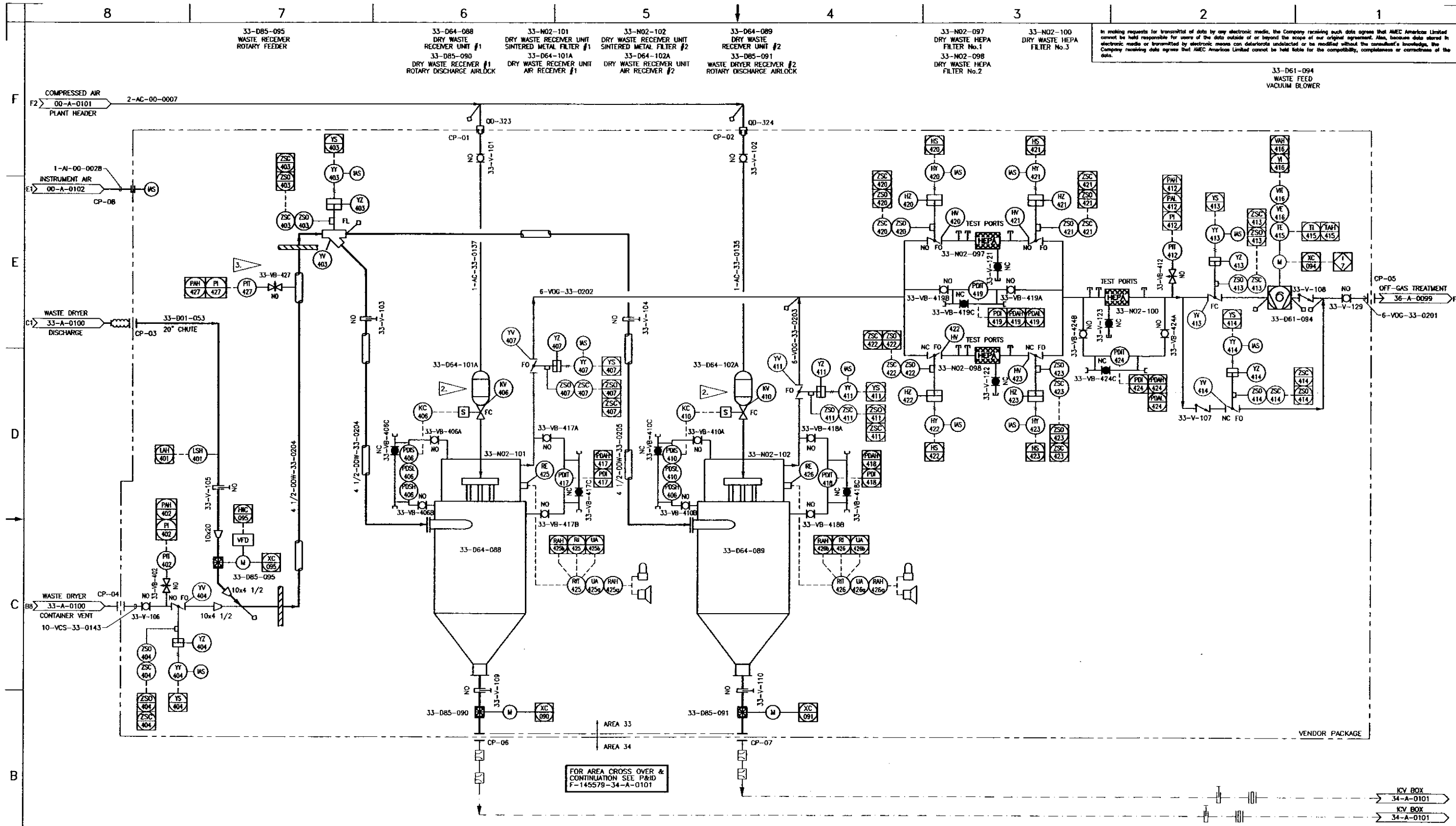

NOTES:

1. NOT USED.
2. THE # SETTING OF SW FILTER PULSE AIR SOLENOIDS MAY VARY PENDING FINAL VENDOR DESIGN.
3. PRESSURE TRANSMITTER ON ENCASEMENT LINE LOCATION TO BE DETERMINED BY SYSTEM PROVIDER.

LOW ICV AIR INLET AIR FLOW STOPS BLOWER.

Rev.	REVISION DESCRIPTION	Date	By	Chk'd	Approved Design Level	Approved Proj. Eng.
H	REVISED PER DBVS-DCL-012	16 JAN 06	SNM	JL	N/A	N/A
G	REVISED PER DBVS-DCL-006	26 JAN 06	SNM	JKL	N/A	N/A
F	ISSUED FOR REVIEW	25 AUG 05	WB	JKL	N/A	N/A
E	ISSUED FOR REVISION & 90% REPORT	12 MAY 05	AA	GJ	FWS	TH

AMEC DRAWING NO. F-145579-33-A-0106 REV H

amec

AMEC PROJECT: 145579-FINAL DBVS DESIGN

U.S. DEPARTMENT OF ENERGY
Office of River Protection

BULK VITRIFICATION
WASTE FEED
DRYER TO BOX P&ID

NAME	DATE
DRAWN BY AA	
DESIGNED BY	
CHECKED BY	
DESIGN / PROC LEAD	
ENGINEERING MANAGER	
PROJECT MANAGER	
DESIGN AUTHORITY	

SIZE F | BLDG NO | SHEET NO | DWG NO | REV

SCALE | SHEET OF

DWG NO	TITLE
-	
DRAWING TRACEABILITY LIST	

REF NUMBER	TITLE
-	
NEXT USED ON	REFERENCES

REV NO	DATE	REV BY	DESCRIPTION	REV BY APPR	REV BY	CHECKED BY	CHECK COMPANY
			REVISIONS				

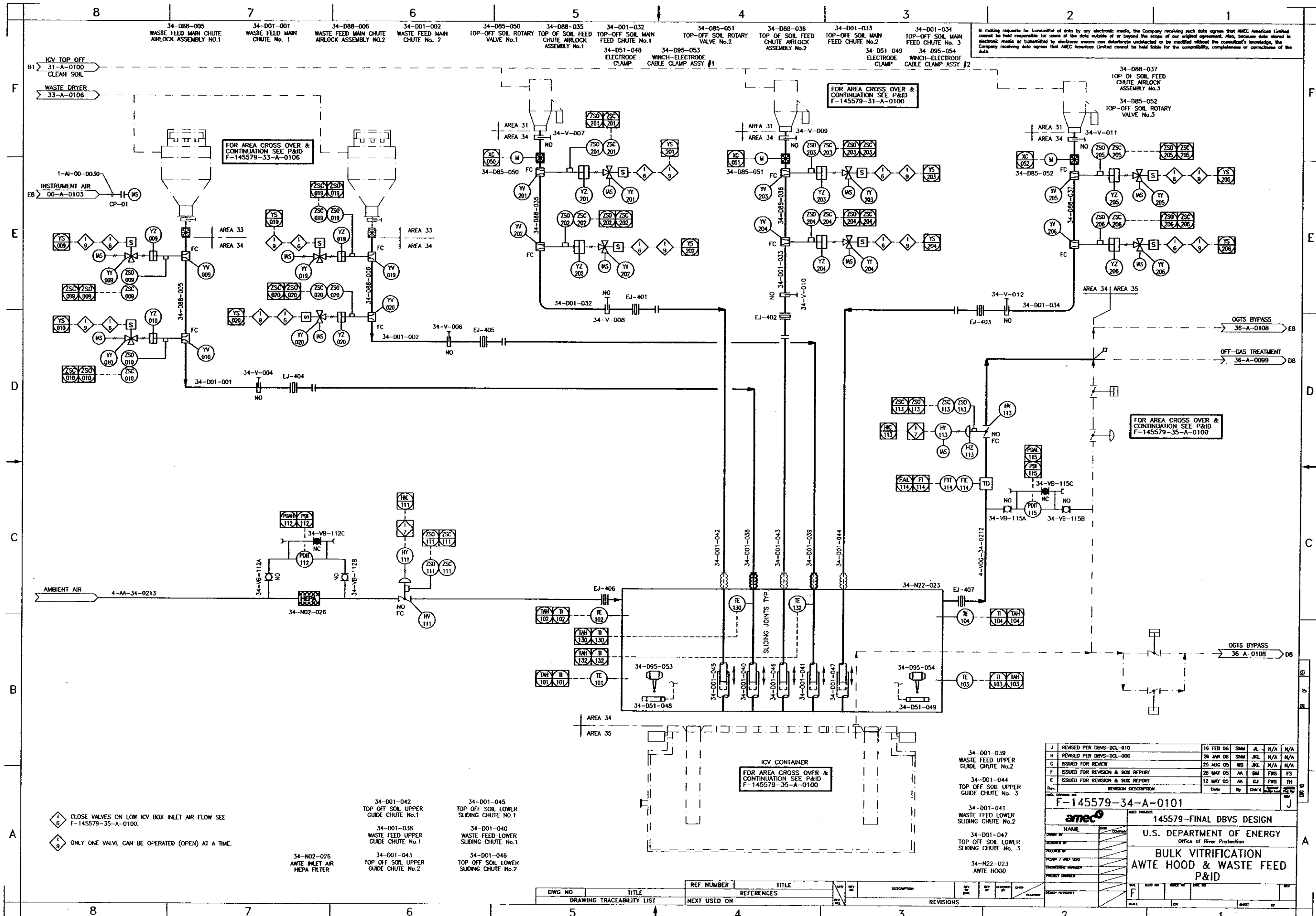
34-D88-005 WASTE FEED MAIN CHUTE AIRLOCK ASSEMBLY NO.1
34-D01-001 WASTE FEED MAIN CHUTE No. 1
34-D88-006 WASTE FEED MAIN CHUTE AIRLOCK ASSEMBLY NO.2
34-D01-002 WASTE FEED MAIN CHUTE No. 2
34-D85-050 TOP-OFF SOIL ROTARY VALVE No.1
34-D88-035 TOP OF SOIL FEED CHUTE AIRLOCK ASSEMBLY No.1
34-D01-032 TOP-OFF SOIL MAIN FEED CHUTE No.1
34-D51-048 ELECTRODE CLAMP
34-D95-053 WINCH-ELECTRODE CABLE CLAMP ASSY #1
34-D85-051 TOP-OFF SOIL ROTARY VALVE No.2
34-D88-036 TOP OF SOIL FEED CHUTE AIRLOCK ASSEMBLY No.2
34-D01-033 TOP-OFF SOIL MAIN FEED CHUTE No.2
34-D51-049 ELECTRODE CLAMP
34-D01-034 TOP-OFF SOIL MAIN FEED CHUTE No. 3
34-D95-054 WINCH-ELECTRODE CABLE CLAMP ASSY #2
34-D88-037 TOP OF SOIL FEED CHUTE AIRLOCK ASSEMBLY No.3
34-D85-052 TOP-OFF SOIL ROTARY VALVE No.3
ICV TOP OFF 31-A-0100 CLEAN SOIL
WASTE DRYER 33-A-0106
INSTRUMENT AIR 00-A-0103
1-AI-00-0030
CP-01
FOR AREA CROSS OVER & CONTINUATION SEE P&ID F-145579-33-A-0106
FOR AREA CROSS OVER & CONTINUATION SEE P&ID F-145579-31-A-0100
FOR AREA CROSS OVER & CONTINUATION SEE P&ID F-145579-35-A-0100
AREA 31
AREA 33
AREA 34
AREA 35
34-V-007
34-V-009
34-V-011
34-V-008
34-V-006
34-V-004
34-V-010
34-V-012
34-D01-032
34-D01-002
34-D01-001
34-D01-033
34-D01-034
34-D85-050
34-D85-051
34-D85-052
34-D88-035
34-D88-036
34-D88-037
34-D88-005
34-D88-006
EJ-401
EJ-402
EJ-403
EJ-404
EJ-405
EJ-406
EJ-407
OGTS BYPASS 36-A-0108
OFF-GAS TREATMENT 36-A-0099
34-VB-115C
34-VB-115A
34-VB-115B
4-VOG-34-0212
34-D01-042
34-D01-038
34-D01-043
34-D01-039
34-D01-044
34-N22-023
SLIDING JOINTS TYP.
34-D95-053
34-D95-054
34-D51-048
34-D51-049
34-D01-045
34-D01-040
34-D01-046
34-D01-041
34-D01-047
AMBIENT AIR
4-AA-34-0213
34-VB-112C
34-VB-112A
34-VB-112B
34-N02-026
ICV CONTAINER
FOR AREA CROSS OVER & CONTINUATION SEE P&ID F-145579-35-A-0100
34-D01-042 TOP OFF SOIL UPPER GUIDE CHUTE No.1
34-D01-038 WASTE FEED UPPER GUIDE CHUTE No.1
34-D01-043 TOP OFF SOIL UPPER GUIDE CHUTE No.2
34-D01-045 TOP OFF SOIL LOWER SLIDING CHUTE No.1
34-D01-040 WASTE FEED LOWER SLIDING CHUTE No.1
34-D01-046 TOP OFF SOIL LOWER SLIDING CHUTE No.2
34-N02-026 AWTE INLET AIR HEPA FILTER
34-D01-039 WASTE FEED UPPER GUIDE CHUTE No.2
34-D01-044 TOP OFF SOIL UPPER GUIDE CHUTE No. 3
34-D01-041 WASTE FEED LOWER SLIDING CHUTE No.2
34-D01-047 TOP OFF SOIL LOWER SLIDING CHUTE No. 3
34-N22-023 AWTE HOOD
CLOSE VALVES ON LOW ICV BOX INLET AIR FLOW SEE F-145579-35-A-0100.
ONLY ONE VALVE CAN BE OPERATED (OPEN) AT A TIME.
J REVISED PER DBVS-DCL-010 16 FEB 06 SMM JL N/A N/A
H REVISED PER DBVS-DCL-006 26 JAN 06 SMM JKL N/A N/A
G ISSUED FOR REVIEW 25 AUG 05 WB JKL N/A N/A
F ISSUED FOR REVISION & SQIX REPORT 26 MAY 05 AA BM FWS FS
E ISSUED FOR REVISION & SQIX REPORT 12 MAY 05 AA CJ FWS TH
Rev. REVISION DESCRIPTION Date By CHK'd
F-145579-34-A-0101
J
amec
145579-FINAL DBVS DESIGN
U.S. DEPARTMENT OF ENERGY
Office of River Protection
BULK VITRIFICATION
AWTE HOOD & WASTE FEED
P&ID
DWG NO TITLE
DRAWING TRACEABILITY LIST
REF NUMBER TITLE
REFERENCES
NEXT USED ON
REVISIONS

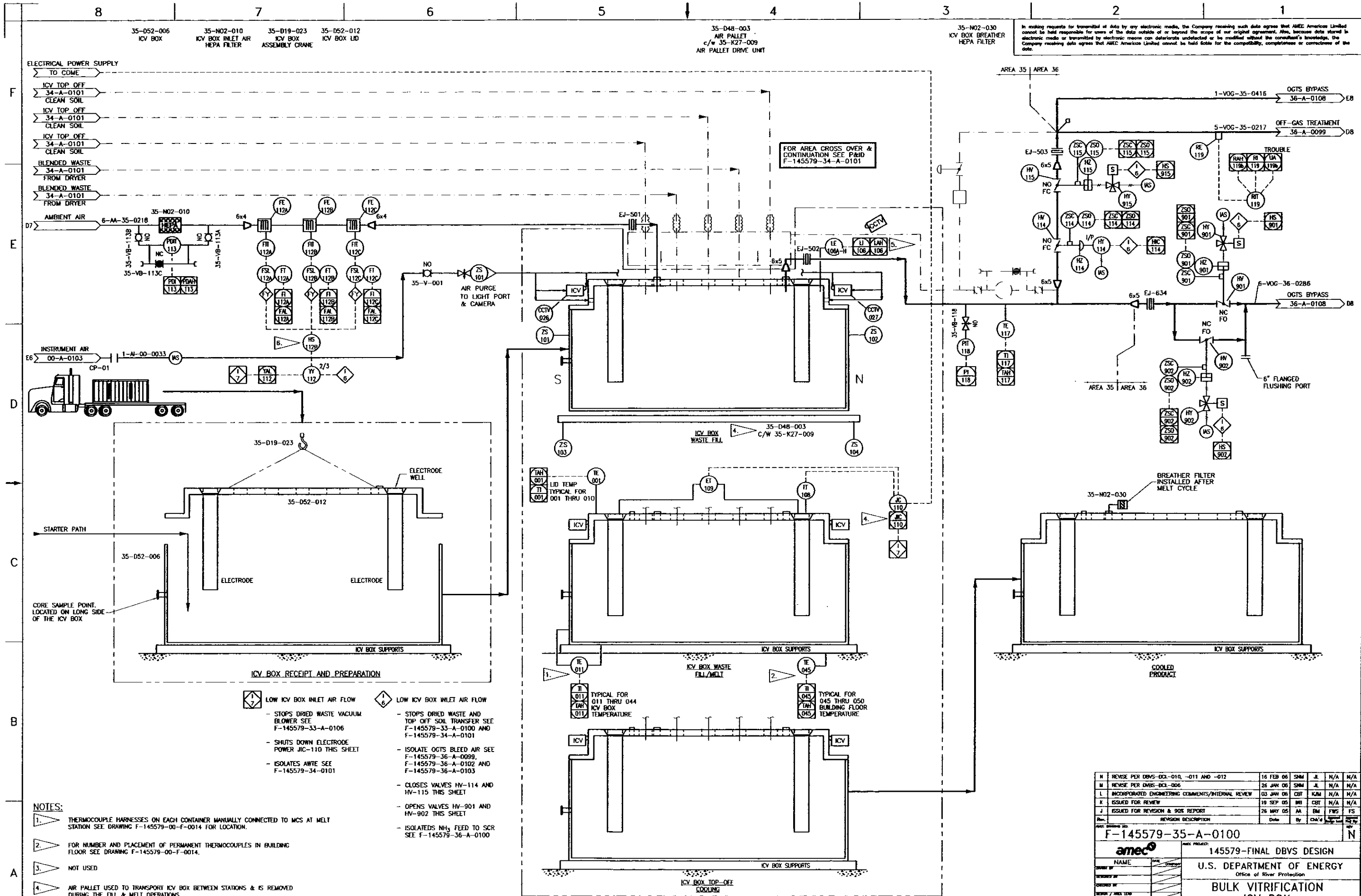
35-D52-006 ICV BOX
35-N02-010 ICV BOX INLET AIR HEPA FILTER
35-D19-023 ICV BOX ASSEMBLY CRANE
35-D52-012 ICV BOX LID
35-D48-003 AIR PALLET c/w 35-K27-009 AIR PALLET DRIVE UNIT
35-N02-030 ICV BOX BREATHER HEPA FILTER
ELECTRICAL POWER SUPPLY
TO COME
ICV TOP OFF 34-A-0101 CLEAN SOIL
BLENDED WASTE 34-A-0101 FROM DRYER
AMBIENT AIR
INSTRUMENT AIR 00-A-0103
FOR AREA CROSS OVER & CONTINUATION SEE P&ID F-145579-34-A-0101
AIR PURGE TO LIGHT PORT & CAMERA
ICV BOX WASTE FILL
C/W 35-K27-009
AREA 35 | AREA 36
OGTS BYPASS 36-A-0108
OFF-GAS TREATMENT 36-A-0099
TROUBLE
6" FLANGED FLUSHING PORT
ELECTRODE WELL
STARTER PATH
CORE SAMPLE POINT, LOCATED ON LONG SIDE OF THE ICV BOX
ELECTRODE
ICV BOX SUPPORTS
ICV BOX RECEIPT AND PREPARATION
LID TEMP TYPICAL FOR 001 THRU 010
ICV BOX WASTE FILL/MELT
TYPICAL FOR 011 THRU 044 ICV BOX TEMPERATURE
TYPICAL FOR 045 THRU 050 BUILDING FLOOR TEMPERATURE
ICV BOX TOP-OFF COOLING
BREATHER FILTER INSTALLED AFTER MELT CYCLE
COOLED PRODUCT
LOW ICV BOX INLET AIR FLOW
- STOPS DRIED WASTE VACUUM BLOWER SEE F-145579-33-A-0106
- SHUTS DOWN ELECTRODE POWER JIC-110 THIS SHEET
- ISOLATES AWTE SEE F-145579-34-0101
LOW ICV BOX INLET AIR FLOW
- STOPS DRIED WASTE AND TOP OFF SOIL TRANSFER SEE F-145579-33-A-0100 AND F-145579-34-A-0101
- ISOLATE OGTS BLEED AIR SEE F-145579-36-A-0099, F-145579-36-A-0102 AND F-145579-36-A-0103
- CLOSES VALVES HV-114 AND HV-115 THIS SHEET
- OPENS VALVES HV-901 AND HV-902 THIS SHEET
- ISOLATEDS NH3 FEED TO SCR SEE F-145579-36-A-0100
NOTES:
1. THERMOCOUPLE HARNESSES ON EACH CONTAINER MANUALLY CONNECTED TO MCS AT MELT STATION SEE DRAWING F-145579-00-F-0014 FOR LOCATION.
2. FOR NUMBER AND PLACEMENT OF PERMANENT THERMOCOUPLES IN BUILDING FLOOR SEE DRAWING F-145579-00-F-0014.
3. NOT USED
4. AIR PALLET USED TO TRANSPORT ICV BOX BETWEEN STATIONS & IS REMOVED DURING THE FILL & MELT OPERATIONS.
5. SENSOR 35-LE-106 EMPLOYS A VERTICAL ARRAY OF EIGHT THERMOCOUPLES MONITORED IN THE MCS, TO INDICATE MELT LEVEL
6. STARTUP OVERRIDE FOR OGTS BYPASS SYSTEM.
N REVISE PER DBVS-DCL-010, -011 AND -012 16 FEB 06 SMM JL N/A N/A
M REVISE PER DVBS-DCL-006 26 JAN 06 SMM JL N/A N/A
L INCORPORATED ENGINEERING COMMENTS/INTERNAL REVIEW 03 JAN 06 CBT KJM N/A N/A
K ISSUED FOR REVIEW 19 SEP 05 WI CBT N/A N/A
J ISSUED FOR REVISION & 90% REPORT 26 MAY 05 AA BM FWS FS
F-145579-35-A-0100
amec
145579-FINAL DBVS DESIGN
U.S. DEPARTMENT OF ENERGY
Office of River Protection
BULK VITRIFICATION ICV BOX P&ID
DRAWING TRACEABILITY LIST
REFERENCES
REVISIONS