START 9713541.0744

0046739

DOE/RL-96-101

UC-630

Radioactive Air Emissions Notice of Construction Fuel Removal for 105-KE Basin

Date Published
February 1997

FEB 1997
RECEIVED
LDMC

United States
Department of Energy
P.O. Box 550
Richland, Washington 99352

Approved for Public Release

TRADEMARK DISCLAIMER

Reference herein to any specific commercial product, process, or service by trade name, trademark, manufacturer, or otherwise, does not necessarily constitute or imply its endorsement, recommendation, or favoring by the United States Government or any agency thereof or its contractors or subcontractors.

This report has been reproduced from the best available copy. Available in paper copy and microfiche.

Available to the U.S. Department of Energy and its contractors from:
Office of Scientific and Technical Information
P.O. Box 62
Oak Ridge, TN 37831
(615) 576-8401

Available to the public from the U.S. Department of Commerce
National Technical Information Service
5285 Port Royal Road
Springfield, VA 22161
(703) 487-4650

Printed in the United States of America

DISCLM-5 CHP (8-91)

CONTENTS

GLOSSARY vi

METRIC CONVERSION CHART vii

1.0 INTRODUCTION 1-1

2.0 FACILITY LOCATION (Requirement 1) 2-1

3.0 RESPONSIBLE MANAGER (Requirement 2) 3-1

4.0 TYPE OF PROPOSED ACTION (Requirement 3) 4-1

5.0 STATE ENVIRONMENTAL POLICY ACT (Requirement 4) 5-1

6.0 PROCESS DESCRIPTION (Requirements 5 and 7) 6-1
6.1 EQUIPMENT AND PROCESS DESCRIPTIONS 6-6
6.1.1 Fuel Retrieval System 6-10
6.1.1.1 Fuel Retrieval System Equipment Description 6-10
6.1.1.2 Fuel Retrieval System Equipment Operation 6-13
6.1.1.3 Fuel Retrieval System Equipment Maintenance 6-14
6.1.2 Multi-Canister Overpack/Cask Loadout Operations Overview 6-14
6.1.2.1 Multi-Canister Overpack 6-16
6.1.2.2 Cask 6-16
6.1.2.3 Immersion Pail 6-16
6.1.2.4 Conveyance Vehicle 6-20
6.1.2.5 Multi-Canister Overpack Loading System . . . 6-20
6.1.3 Integrated Water Treatment System Overview 6-20
6.1.3.1 Integrated Water Treatment System 6-23
6.1.3.2 Water Addition 6-26
6.1.3.3 Excess Water Removed From the Basin 6-26
6.1.3.4 Integrated Water Treatment System Operation 6-26
6.1.3.5 Integrated Water Treatment System Maintenance 6-27
6.1.4 Sludge Relocation Underwater 6-28
6.2 FACILITY MODIFICATIONS 6-28
6.2.1 General Construction Activities 6-28
6.2.2 Fuel Retrieval System 6-29
6.2.3 Multi-Canister Overpack/Cask Loadout System 6-30
6.2.4 Integrated Water Treatment System 6-31
6.2.5 Water Returns to the 105-KE Basin from Cold Vacuum Drying 6-31

CONTENTS (cont)

6.3 DEBRIS REMOVAL DESCRIPTION 6-32

7.0 ANNUAL POSSESSION QUANTITY AND PHYSICAL FORM (Requirements 8, 10, 11, and 12) 7-1
7.1 SOURCE TERM DESCRIPTION 7-1
7.1.1 Fuel Elements 7-1
7.1.2 Basin Water 7-3
7.1.3 Sludge 7-3
7.1.4 Surface Contamination 7-5
7.1.5 Multi-Canister Overpack Source Term 7-6
7.1.6 Multi-Canister Overpack Particulate 7-6
7.2 ANNUAL POSSESSION QUANTITY, PHYSICAL FORM, RELEASE FORM, AND CHEMICAL FORM 7-6

8.0 CONTROL SYSTEM (Requirement 6) 8-1
8.1 CONTROL EQUIPMENT 8-1
8.1.1 Basin Water 8-1
8.1.2 Existing Water Treatment 8-1
8.1.3 Integrated Water Treatment System 8-1
8.2 CONTROLS FOR ABOVE WATER ACTIVITIES 8-2
8.3 CONTROL EQUIPMENT EFFICIENCIES 8-2
8.4 INTEGRATED WATER TREATMENT SYSTEM OPERATIONAL CONTROLS 8-3

9.0 MONITORING SYSTEM (Requirement 9) 9-1

10.0 RELEASE RATES (Requirement 13) 10-1
10.1 PROJECTED EMISSIONS BASED ON GOOD ENGINEERING JUDGMENT AND EMISSIONS DATA 10-1
10.2 1995 ANNUAL EMISSIONS 10-3
10.3 PROJECTED EMISSIONS WITHOUT ABATEMENT CONTROLS IN PLACE (POTENTIAL TO EMIT) 10-3

11.0 OFFSITE IMPACT (Requirement 14 and 15) 11-1

12.0 FACILITY LIFETIME (Requirement 17) 12-1

13.0 TECHNOLOGY STANDARDS (Requirement 18) 13-1

14.0 REFERENCES 14-1

APPENDIX

A DISCUSSION OF AS LOW AS REASONABLY ACHIEVABLE CONTROL TECHNOLOGY . . . . . APP A-i

FIGURES

2-1. Location of the 100-K Area within the Hanford Site 2-2
2-2. Location of Both Basins within the 100-K Area 2-3
6-1. Fuel Retrieval System General System Layout 6-3
6-2. The Basin Water Level in Relation to the Stored Fuel 6-5
6-3. Multi-Canister Overpack Fuel Basket 6-7
6-4. Functional Process Flow Diagram for the Integrated Water Treatment System 6-9
6-5. Conceptual Schematic of the Fuel Retrieval System Mechanical Flow 6-11
6-6. Fuel Element with Inner and Outer Elements 6-15
6-7. Multi-Canister Overpack with Mechanical Closure Assembly 6-17
6-8. Cask Assembly 6-18
6-9. Immersion Pail Interfaces 6-19
6-10. Cask and Conveyance System 6-21
9-1. Fixed Head Sampler Positions 9-3
9-2. Locations of Near-Field Monitoring Locations 9-4

TABLES

7-1. 105-KE Basin Radionuclide Inventory (Source Term) 7-2
7-2. Radionuclides in 105-KE Basin Water (February 20, 1996) 7-3
7-3. Estimated 105-KE Basin Sludge Volumes. 7-5
7-4. Calculated 105-KE Basin Sludge 7-5
7-5. Physical Form, Release Form, and Chemical Form 7-7
8-1. Average Radionuclide Maximum Removal Efficiencies of the 105-KE Basin Water Treatment System Components 8-2
8-2. Projected Particulate Removal Efficiencies of the 105-KE Basin Water Treatment System Components 8-3
10-1. Good Engineering Judgment Projected Emissions Using Fixed Head Sampler (RV11) Data 10-1
10-2. Radioactive Air Emissions Measured at 105-KE Basin in Calendar Year 1995 10-5
10-3. Projected Unabated Radioactive Air Emissions 10-6
10-4. Potential to Emit from Excess KE-Basin Water via Tanker Truck to 200 Area Effluent Treatment Facility 10-7
11-1. Total Effective Dose Equivalent to the Maximally Exposed Individual Using Projected Emissions Based on Best Engineering Judgment and Emissions Data for the Unabated Emissions 11-1

11-2. Total Effective Dose Equivalent to the Maximally Exposed Individual Using CAP-88 Dose Conversion Factors for Good Engineering Judgment of Abated Emissions 11-2

GLOSSARY

ALARA	as low as reasonable achievable
CFR	Code of Federal Regulations
CVDF	Cold Vacuum Drying Facility
DOH	Washington State Department of Health
Ecology	Washington State Department of Ecology
FRS	fuel retrieval system
HEPA	high-efficiency particulate air
IXM	ion exchange module
MEI	maximally exposed individual
MCO	multi-canister overpack
NOC	notice of construction
PTE	potential to emit
RCRA	*Resource Conservation and Recovery Act of 1976*
SEPA	(Washington) *State Environmental Policy Act of 1971*
SNF	spent nuclear fuel
SNM	special nuclear material
SPR	single pass reactor
TEDE	total effective dose equivalent
WAC	Washington Administrative Code
Ci	curies
Ci/day	curies per day
Ci/yr	curies per year
C°	degrees Celsius
Kg	kilogram
Kpa	kilopascal
mrem	milliroentgen equivalent man
MTU	metric tons of uranium
rem	roentgen equivalent man
µCi/ml	microcuries per milliliter
µCi/L	microcuries per liter

METRIC CONVERSION CHART

The following conversion chart is provided to the reader as a tool to aid in conversion.

Into metric units			Out of metric units		
If you know	Multiply by	To get	If you know	Multiply by	To get
Length			**Length**		
inches	25.40	millimeters	millimeters	0.0393	inches
inches	2.54	centimeters	centimeters	0.393	inches
feet	0.3048	meters	meters	3.2808	feet
yards	0.914	meters	meters	1.09	yards
miles	1.609	kilometers	kilometers	0.62	miles
Area			**Area**		
square inches	6.4516	square centimeters	square centimeters	0.155	square inches
square feet	0.092	square meters	square meters	10.7639	square feet
square yards	0.836	square meters	square meters	1.20	square yards
square miles	2.59	square kilometers	square kilometers	0.39	square miles
square miles	259	hectares	hectares	0.00391	square miles
acres	0.404	hectares	hectares	2.471	acres
Mass (weight)			**Mass (weight)**		
ounces	28.35	grams	grams	0.0352	ounces
pounds	0.453	kilograms	kilograms	2.2046	pounds
short ton	0.907	metric ton	metric ton	1.10	short ton
Volume			**Volume**		
fluid ounces	29.57	milliliters	milliliters	0.03	fluid ounces
quarts	0.95	liters	liters	1.057	quarts
gallons	3.79	liters	liters	0.26	gallons
cubic feet	0.03	cubic meters	cubic meters	35.3147	cubic feet
cubic yards	0.76	cubic meters	cubic meters	1.308	cubic yards
Temperature			**Temperature**		
Fahrenheit	subtract 32 then multiply by 5/9ths	Celsius	Celsius	multiply by 9/5ths, then add 32	Fahrenheit

Source: *Engineering Unit Conversions*, M. R. Lindeburg, PE., Second Ed., 1990, Professional Publications, Inc., Belmont, California.

9713541.0748

RADIOACTIVE AIR EMISSIONS NOTICE OF CONSTRUCTION FUEL REMOVAL FOR 105-KE BASIN

1.0 INTRODUCTION

This document serves as a notice of construction (NOC), pursuant to the requirements of Washington Administrative Code (WAC) 246-247-060, and as a request for approval to construct pursuant to 40 Code of Federal Regulations (CFR) 61.96 for the modifications, installation of new equipment, and fuel removal and sludge relocation activities at 105-KE Basin.

The 105-K east reactor and its associated spent nuclear fuel (SNF) storage basin (105-KE Basin) were constructed in the early 1950s and are located in the 100-K Area about 1,400 feet from the Columbia River. The 105-KE Basin contains 1,152 metric tons of SNF stored underwater in 3,673 open canisters. This SNF has been stored for varying periods of time ranging from 8 to 24 years. The 105-KE Basin is constructed of unlined concrete and contains approximately 1.3 million gallons of water with an asphaltic membrane beneath the pool. The fuel is corroding and an estimated 1,700 cubic feet of sludge, containing radionuclides and miscellaneous materials, have accumulated in the basin.

The 105-KE Basin has leaked radiologically contaminated water to the soil beneath the basin in the past most likely at the construction joint between the foundation of the basin and the foundation of the reactor.

The purpose of the activities described in this Notice of Construction (NOC) is to enable the retrieval and transport of the fuel to the Cold Vacuum Drying Facility (CVDF). This NOC describes modifications, the installation of new equipment, and fuel removal and sludge relocation activities expected to be routine in the future. Debris removal activities described in this NOC will supersede the previously approved NOC (DOE/RL-95-65).

The proposed modifications described are scheduled to begin in calendar year 1997.

This page intentionally left blank.

2.0 FACILITY LOCATION (Requirement 1)

The 105-KE Basin is located within the 105-KE Reactor structure in the 100-K Area of the Hanford Site. The 100-K Area is approximately 25 miles northwest of the city of Richland, Washington. Figure 2-1 shows the location of the 100-K Area and Figure 2-2 shows the location of both basins within the 100-K Area.

There are four roof exhausters in 105-KE Basin. The Washington State Plane Coordinates for these points are as follows:

P-105KE-1	Latitude:	146722 N	Longitude:	569150 E
P-105KE-2	Latitude:	146728 N	Longitude:	569149 E
P-105KE-3	Latitude:	146735 N	Longitude:	569170 E
P-105KE-4	Latitude:	146742 N	Longitude:	569187 E

Address: U.S. Department of Energy, Richland Operations Office
Hanford Site
100-K Area, 105-KE and KW Basins
Richland, Washington 99352.

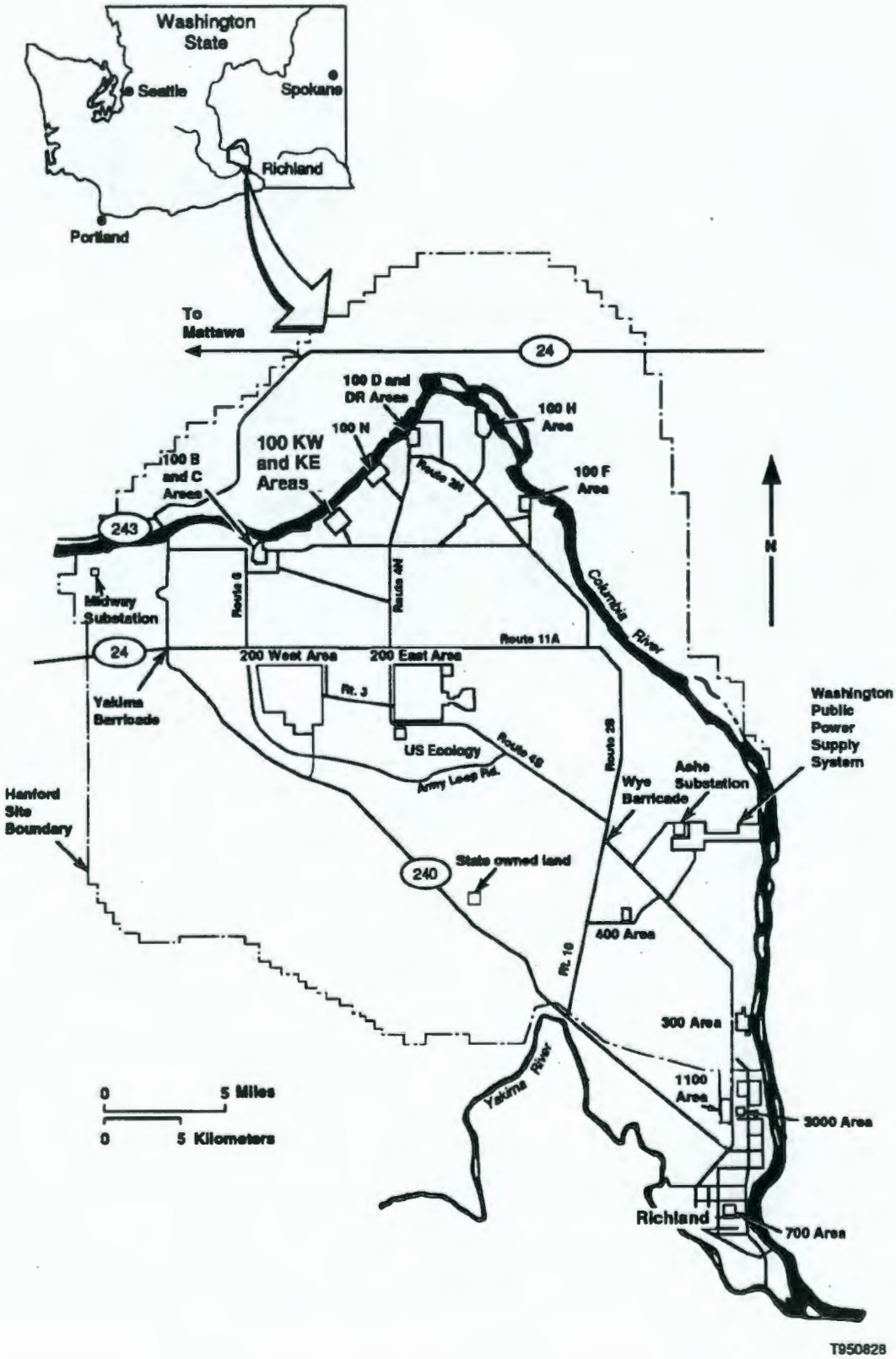

Figure 2-1. Location of the 100-K Area within the Hanford Site.

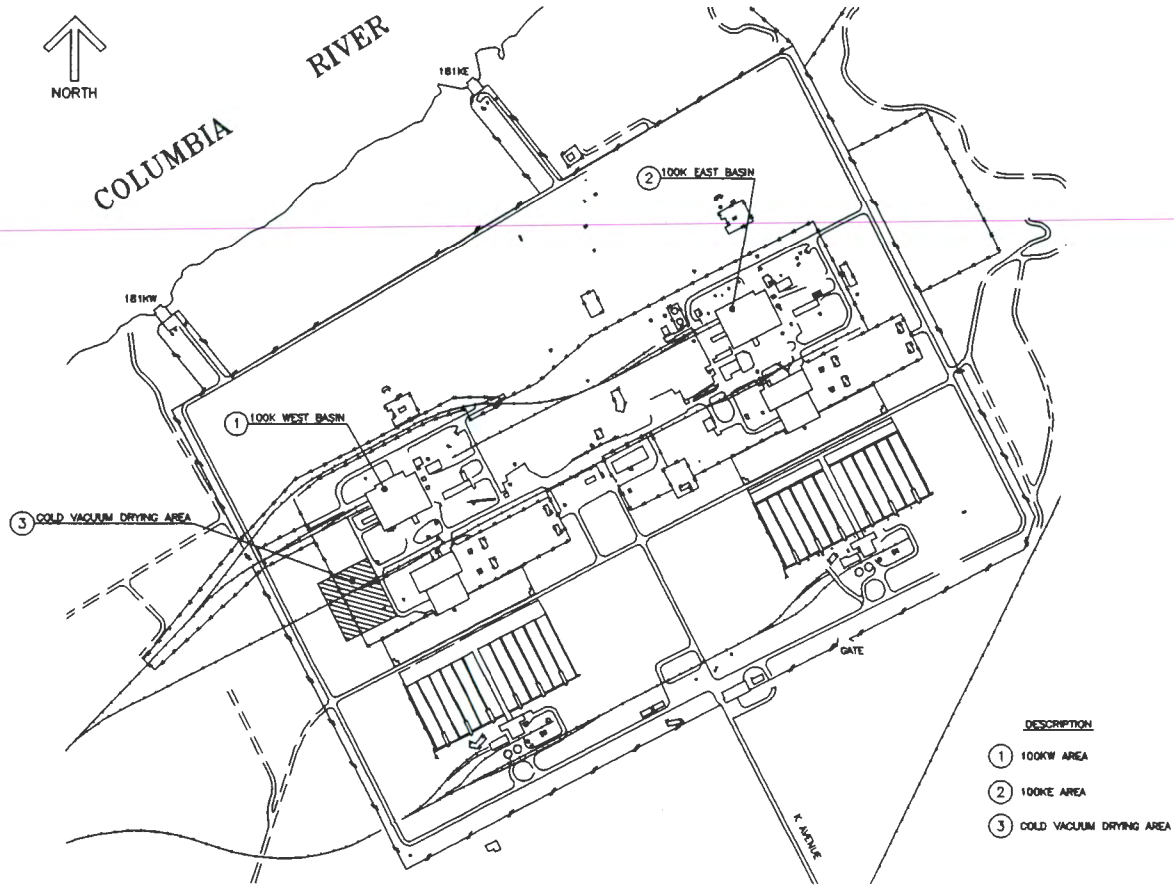

Figure 2-2. Location of Both Basins within the 100-K Area.

This page intentionally left blank.

3.0 RESPONSIBLE MANAGER (Requirement 2)

The responsible manager's name and address are as follows:

Ms. E. D. Sellers, Division Director
Spent Nuclear Fuels Project Division
U.S. Department of Energy
Richland Operations Office
Mail Stop S7-41
P.O. Box 550
Richland, WA. 99352
(509) 373-9860.

This page intentionally left blank.

4.0 TYPE OF PROPOSED ACTION (Requirement 3)

The proposed action consists of the installation, operation, and maintenance of fuel removal and sludge relocation equipment; the transport of fuel and residual sludge on the fuel in multi-canister overpacks (MCOs) to the CVDF; as well as debris removal and minor basin modifications.

This proposed action is not considered a significant modification to the existing basin and operations at the 105-KE Basin in accordance with Washington Administrative Code (WAC) 246-247-030 (16) and (25).

This page intentionally left blank.

9713141.0756

5.0 STATE ENVIRONMENTAL POLICY ACT (Requirement 4)

The proposed activity is categorically exempt from the *State Environmental Policy Act* (SEPA) *of 1971* per WAC 197-11-845(1).

This page intentionally left blank.

6.0 PROCESS DESCRIPTION (Requirements 5 and 7)

Fuel storage operations at the 105-KE Basin have been continuous since 1975. The 105-KE Basin is a rectangular, reinforced concrete basin measuring 125 feet long by 66 feet wide by 21 feet deep with three main storage bays separated by concrete partitions open at each end, two loadout pits, viewing pits, and a discharge chute. Structures for transporting fuel are at the west end where the railroad tracks enter through a large rollup door providing access to the (south) loadout pit. A 30-ton bridge crane has been used for lifting casks from the railcar into the loadout pit. Metal grating is suspended over the entire basin, 21 feet above the basin floor (5 feet over the nominal water level) to provide a working surface from which operators maneuver the fuel canisters. Canisters are moved by using a hoist and monorail system that runs throughout the 105-KE Basin.

The main storage bay floor is equipped with racks designed to house fuel canisters. The canisters are stored directly on the basin floor, surrounded by storage racks that maintain the canisters upright, in a fixed geometric array. The existing canisters consist of two cylinders approximately 9 inches in diameter by 26 inches tall, made of aluminum or stainless steel, and are joined by trunnions to facilitate handling. A canister can hold a maximum of 14 N Reactor fuel elements.

The water level of the 105-KE Basin is maintained at approximately 16 feet deep to cool the fuel and to provide radiological shielding for personnel. To maintain low concentrations of radionuclides, the water is circulated through a closed-loop water treatment system. A detailed description of this system is provided in Section 6.1.3.1. The general layout of the fuel retrieval system (FRS) is shown in Figure 6-1 and the basin water level in relation to the stored fuel is shown in Figure 6-2.

A complete description of the 105-KE Basin can be found in the Safety Analysis Report (WHC 1996a) and in technical safety requirements.

This NOC describes activities necessary to remove SNF from the 105-KE Basin and transport the fuel to the CVDF. Operations within the CVDF are covered by other NOCs. Removal and transport of the fuel involves four major program elements as follows:

- Supporting construction activities necessary to provide the specialized equipment to do the work
- Underwater fuel retrieval processes and associated water treatment by the integrated water treatment system (IWTS)
- Removal of the fuel from the water and transport of the fuel to the CVDF
- Handling of fuel retrieval byproducts including debris and sludge.

This page intentionally left blank.

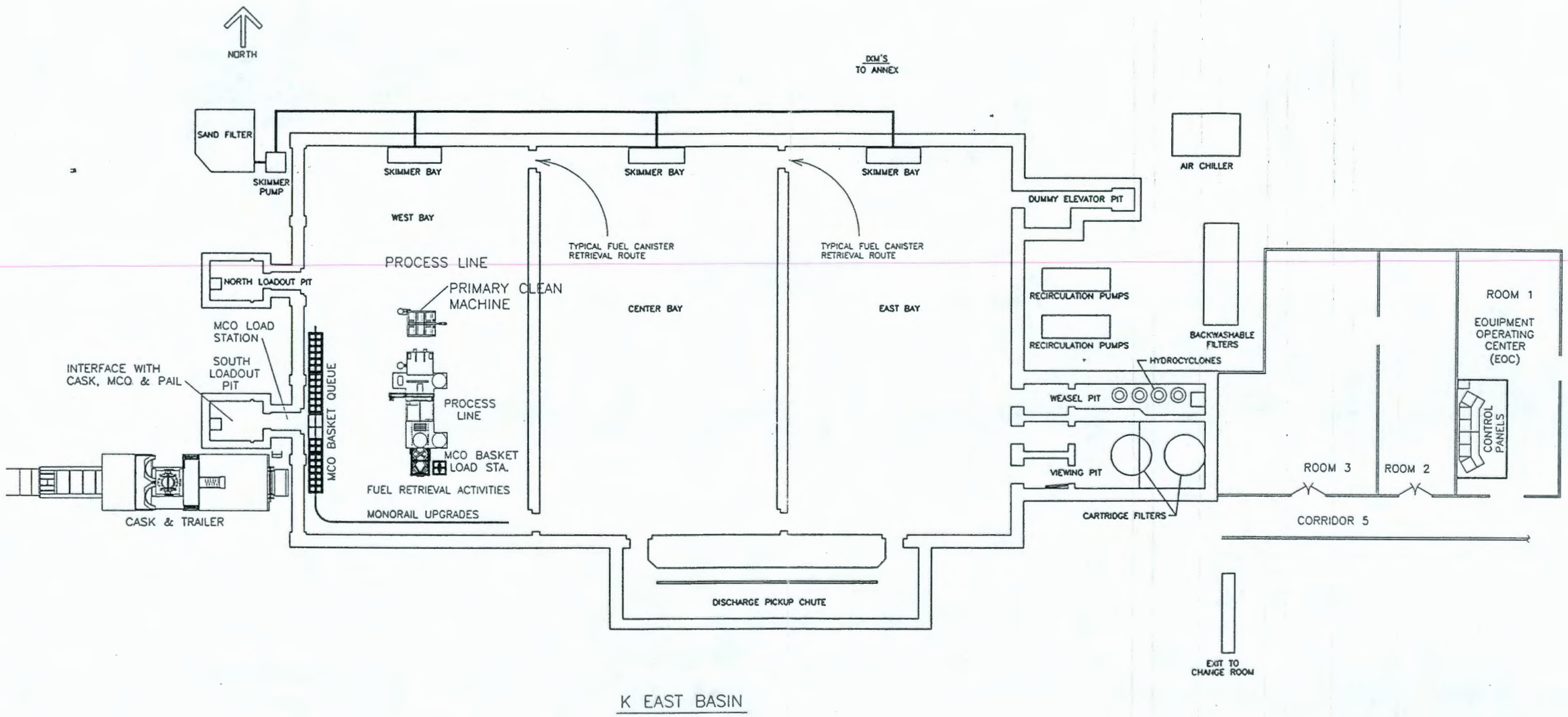

Figure 6-1. Fuel Retrieval System General Layout.

THIS PAGE INTENTIONALLY
LEFT BLANK

9713541.0755

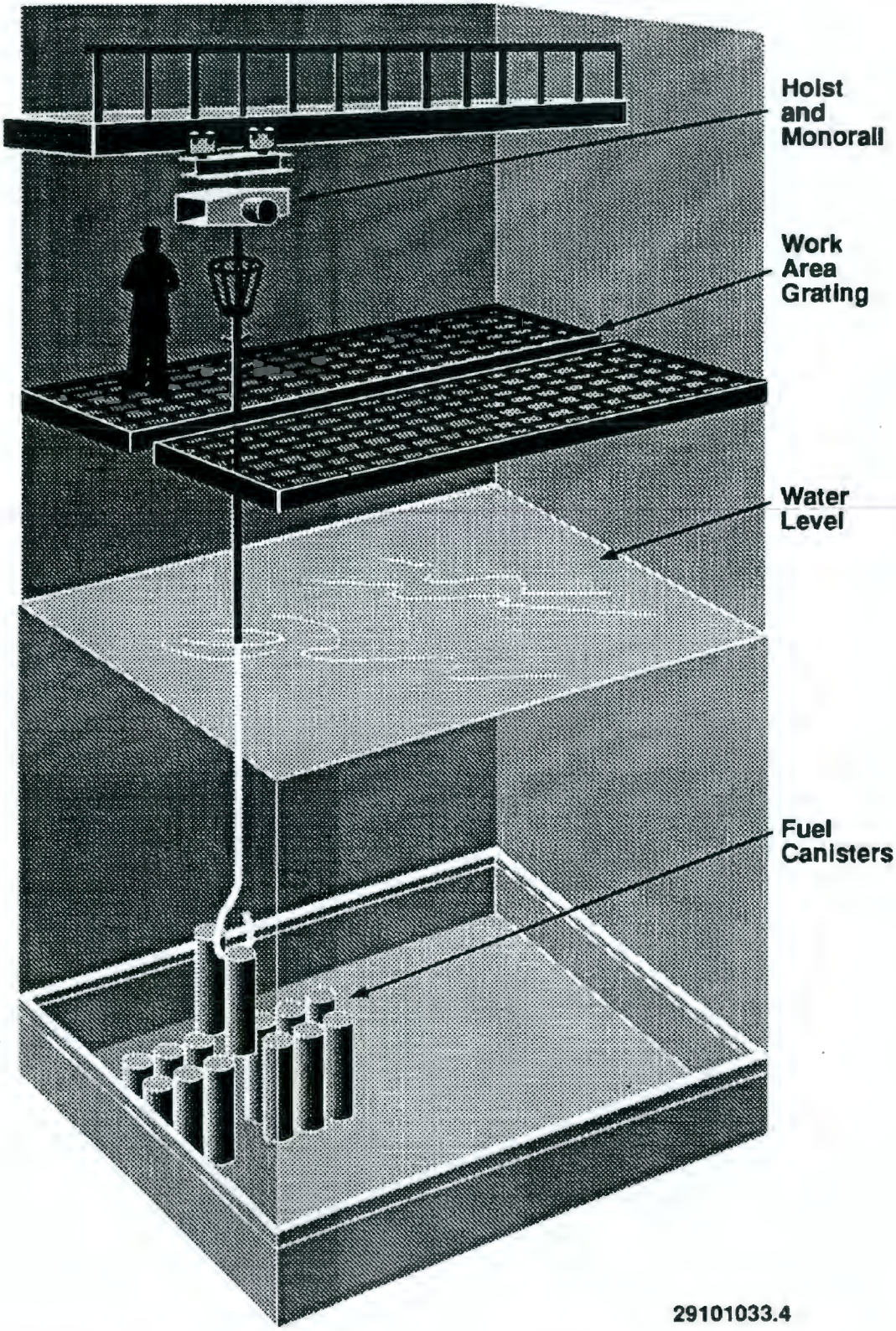

Figure 6-2. The Basin Water Level in Relation to the Stored Fuel.

The fuel retrieval process will be conducted underwater. The process will encompass cleaning the fuel and repackaging in MCO baskets (Figure 6-3). The process is designed to ensure that as much of the loose oxides as possible are removed from the fuel before transport. Underwater operations involve the use of manipulators to handle the fuel, although some (above water) hoists will be used to handle MCO baskets and canisters. The use of long-handled tongs or similar tools will supplement the manipulators as necessary. The radionuclides dispersed within the water during this process will be collected and treated by the IWTS. The fuel retrieval process cannot be conducted without the IWTS operating, as necessary, to remove sludge from the work areas.

The fuel, once packaged in MCO baskets, will be removed from the basin by way of a container (MCO and integral cask) that is designed to minimize contamination on the cask as the cask leaves the water. Only the top surface of the MCO will be exposed to the basin water and will be readily decontaminated. The MCO is closed underwater and sealed within the cask before loading for transport to the CVDF.

The proposed construction activities largely involve the installation of uncontaminated (new) equipment in the basin, portions of which will be placed underwater on the floor of the basin and portions that will be installed above water. An annex will be constructed to house the part of the water treatment system that adjoins the building.

During the installation of FRS, IWTS, or MCO/cask loadout equipment, it might be necessary to remove, reconfigure, and reinstall such equipment. The as low as reasonably achievable (ALARA) methods will be followed to control contamination on this relatively new equipment.

The fuel removal process will result in the generation of several thousand empty fuel canisters. These canisters and other existing debris will continue to be removed from the basin. Sludge collected by the IWTS will be transported and accumulated underwater for subsequent transfer, which will be addressed in a future NOC.

6.1 EQUIPMENT AND PROCESS DESCRIPTIONS

The equipment includes new systems for the FRS, MCOs, MCO casks, MCO/cask handling, MCO/cask transportation, IWTS, and sludge and debris handling. Figure 6-4 shows a functional process flow schematic for the IWTS. Modifications to the existing basin will be necessary to accommodate these new systems, as described in Section 6.2. Existing systems will provide support functions. Equipment descriptions, system operations, and related system maintenance for the new systems are discussed in the following sections.

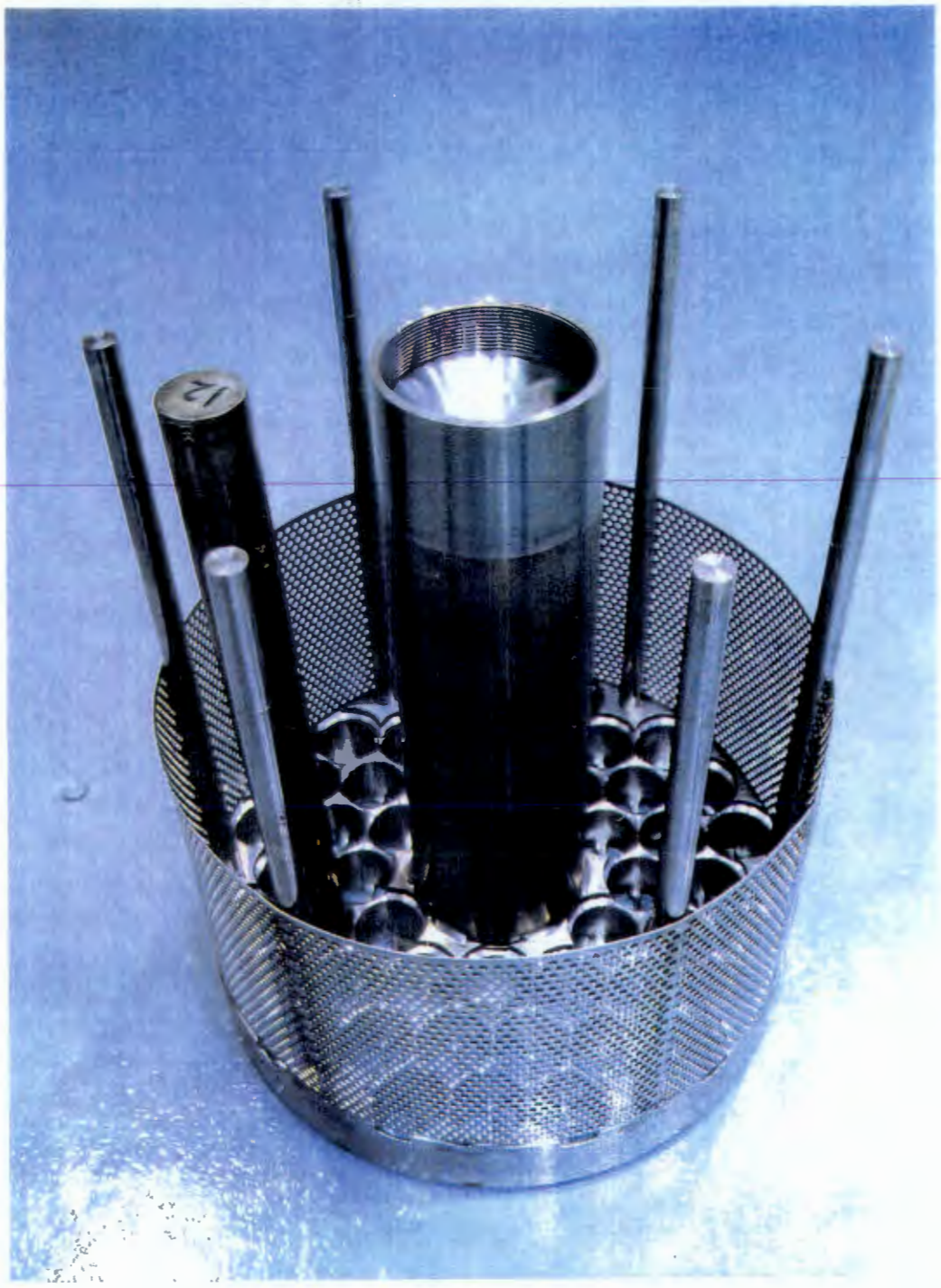

Figure 6-3. Multi-Canister Overpack Fuel Basket.

This page intentionally left blank.

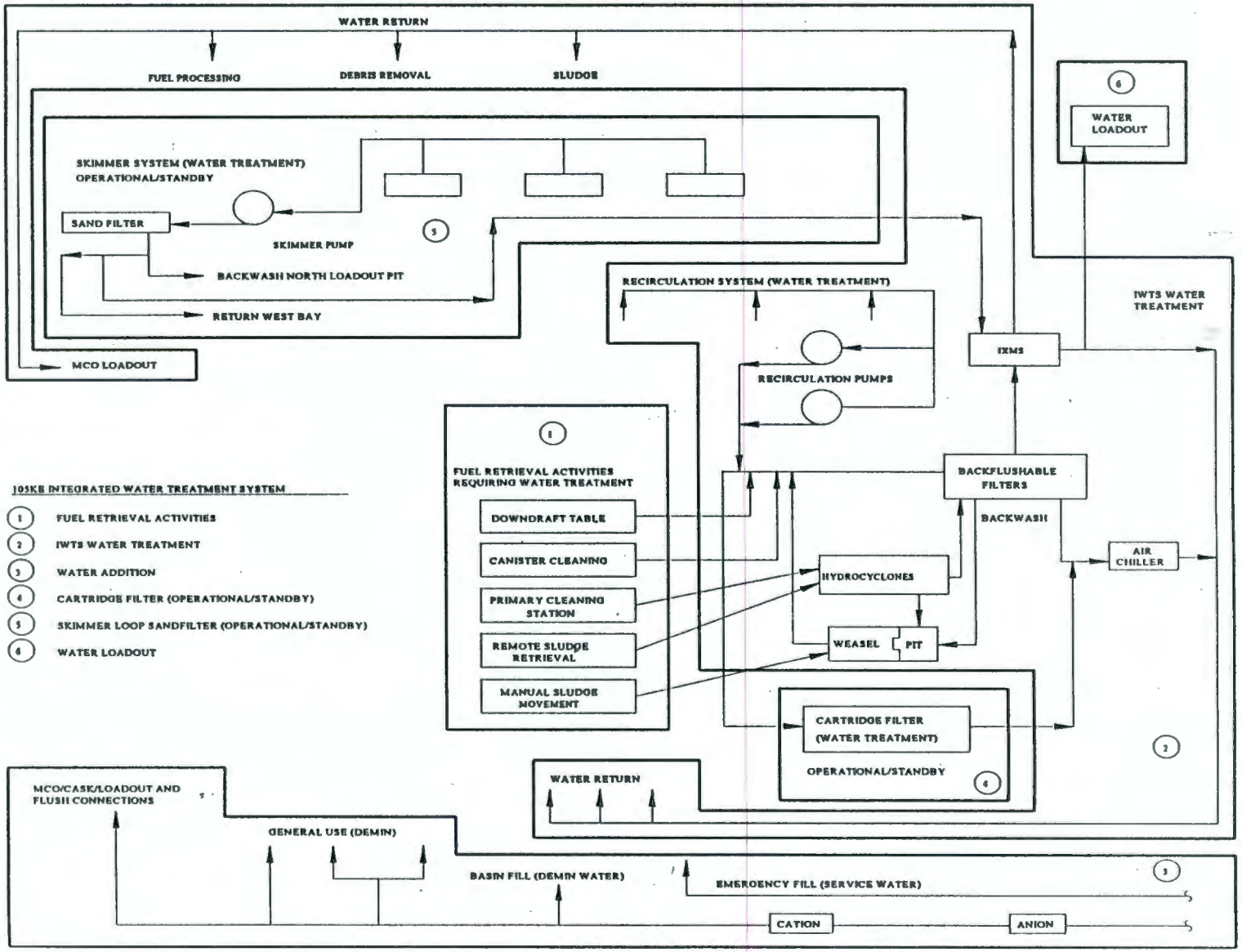

Figure 6-4. Functional Process Flow Diagram for the Integrated Water Treatment System.

6.1.1 Fuel Retrieval System

The FRS is necessary to enable retrieval of fuel stored in canisters and baskets throughout the basin and to prepare the fuel for removal from the basin in a configuration suitable for downstream conditioning processes. A description of the FRS is provided in the following sections.

6.1.1.1 Fuel Retrieval System Equipment Description. Major components of the FRS include the monorail hoists and transfer crane, primary clean machine, process table, manipulators, cameras and lighting, MCO basket queue, equipment operations center, and stuck fuel equipment. Figure 6-5 is a schematic of the FRS mechanical flow.

- **Monorail Hoist and Flexible Transfer Crane**--The 105-KE Basin has an existing monorail and hoist system for the underwater handling of fuel canisters and equipment. This existing monorail system will be modified to include motorized variable speed hoists and a power driven transfer crane capable of moving a fully loaded MCO basket. The hoists and the flexible transfer crane will be used to move canisters and MCO baskets underwater, and to load empty MCO baskets into the basin.

- **Primary Clean Machine**--The primary clean machine (refer to Figures 6-1 and 6-5) will be used to facilitate separation of the fuel from the canisters and to remove canister sludge, while minimizing impact on the basin water quality. Primary cleaning will be accomplished via a combination of mechanical agitation and pressure water rinsing. Sludge will be transported to the sludge accumulation area(s) and scrap fuel will be accumulated in scrap baskets. Wash water and sludge will be transferred to the IWTS via a hose, pump, and associated piping.

- **Process Table**--The process table (refer to Figures 6-1 and 6-5) will be the basic support structure for equipment used to inspect and handle the fuel and will consist of a large table with defined areas for fuel handling functions, e.g., disassembly, secondary cleaning, inspection.

- **Manipulators**--The underwater manipulators, which are hydraulically operated and remotely controlled (refer to Figures 6-1 and 6-5), will be used to handle fuel elements, fuel scrap, and debris on the process table. The manipulator support will consist of the bridge support structure installed over the in-pool process table within the west bay of the basin.

- **Cameras and lighting**--Underwater closed-circuit television cameras and related lighting will be provided to support fuel inspection and fuel handling operations. Control and operation of the closed-circuit television will be provided from a remote location (Figure 6-1).

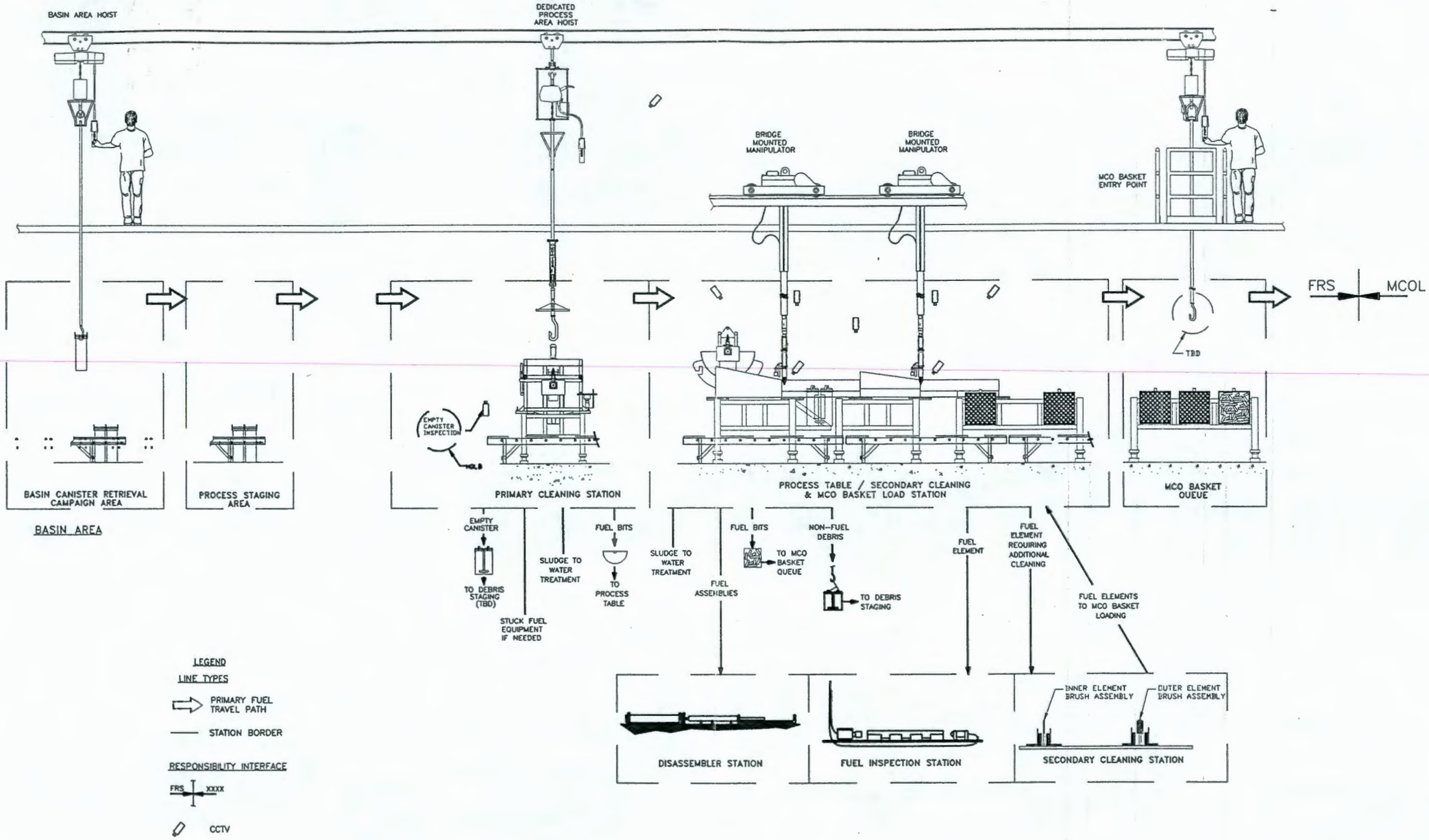

Figure 6-5. Conceptual Schematic of the Fuel Retrieval System Mechanical Flow.

THIS PAGE INTENTIONALLY
LEFT BLANK

- **MCO Basket Queue**--The MCO basket queue (refer to Figures 6-1 and 6-5) will consist of stands located underwater near the south loadout pit that will hold the loaded MCO baskets. The basket queue will be a simple rigid steel structure designed to hold the weight of the loaded MCO baskets under all expected conditions.

- **Equipment Operations Center**--The equipment operations center (EOC) is located in the existing office area adjacent to the basin. The EOC, a remote (noncontaminated) operations station, provides for the operation of the hydraulic manipulators, closed-circuit televisions, and general surveillance. Communication among operators is possible with a two-way radio system. Enhanced radiation monitoring will be provided by the installation of a portable gamma radiation monitor in the FRS process area.

- **Stuck Fuel Equipment**--This underwater equipment will include apparatus to hold the canister and long-handled tools that will allow stuck fuel to be loosened. Apparatus also could be provided for slitting of the canister walls to remove stuck fuel. All stuck fuel operations will be conducted underwater.

6.1.1.2 Fuel Retrieval System Equipment Operation. The FRS operation will retrieve the fuel from storage locations in the basin, clean the fuel, load the fuel into MCO baskets, and will queue the baskets for MCO loading. Sludge generated during the cleaning process will be relocated to the sludge accumulation area(s) via the IWTS interface with the primary clean machine, and the stuck fuel equipment (if needed). Debris material collected during the fuel cleaning process will be stored in the basin for later removal from the basin using the controls discussed in Section 8.0 and descriptions provided in Section 6.3 of this NOC. All FRS operations occur underwater in the basin.

The SNF is stored underwater in open canisters containing up to 14 fuel assemblies per canister. Some single pass reactor (SPR) fuel (Section 7.0) presently is stored in existing SPR fuel baskets. The SPR fuel will be reloaded into canisters or will be loaded directly into the primary clean machine for cleaning. Fuel canisters will be retrieved from the basin and will be placed, as needed, in existing fuel storage racks in front of the primary clean machine. The primary clean machine will clean the canister and the fuel by a combination of mechanical agitation and water sprays. This mechanical action also will serve to loosen fuel that could be stuck in the canister. Sludge and fuel corrosion particles loosened during the cleaning will be directed into the IWTS.

The fuel will be tipped out onto the process table (Figure 6-5) where the fuel will be sorted, disassembled, and inspected as necessary. The fuel will be sorted to separate out non-fuel debris and fuel scrap (fuel element pieces shorter than 3 inches in length). Fuel scrap will be loaded into an MCO scrap basket located on the process table. Non-fuel debris will be loaded into a debris bin on the process table. Filled debris bins will be transferred to a debris staging area for later removal from the basin using the controls discussed in Section 8.0 and descriptions provided in Section 6.3 of this NOC.

Fuel assemblies (consisting of an inner and outer element), as shown in Figure 6-6, could be picked up and rotated to a vertical orientation to separate the inner element from the outer element. Fuel elements that do not disassemble by this method could be loaded into a disassembly station to separate the inner and outer elements.

Fuel elements will be inspected for cleanliness. Clean fuel elements will be transferred directly to the MCO basket loading area of the process table. Fuel elements that fail the cleanliness inspection will be cleaned underwater in the secondary cleaning station as necessary. The secondary cleaning station will use mechanical or hydraulic means to remove residual sludge from the fuel elements.

Following cleaning and inspection, the fuel elements will be loaded into MCO fuel baskets. Fuel that does not meet the fuel element criteria will be loaded into an MCO scrap basket. When MCO fuel baskets and MCO fuel scrap baskets are filled, these will be moved to the MCO loading queue using a transfer crane and hoists.

It is expected that the fuel can be demonstrated to be clean without subjecting the fuel to all of the cleaning steps. Operating plans include a stage of the primary process validation strategy that will demonstrate the adequacy of the first cleaning process during startup of the system. During the process validation phase, all the disassembled fuel will be inspected to verify that the primary clean machine is adequately cleaning the fuel. If the validation is successfully completed, clean fuel will be loaded directly into MCO baskets from the canisters, bypassing secondary cleaning. To ensure that the system is continuing to properly clean the fuel, assemblies will be sampled periodically and inspected before loading in the MCO basket. Inspection of each of the loaded fuel baskets will provide additional assurance that the cleaning process is functional.

6.1.1.3 Fuel Retrieval System Equipment Maintenance. Maintenance of the FRS is expected to include routine removal of the manipulators from the basin for rebuilding. The balance of the FRS equipment is primarily passive and therefore requires minimal maintenance and repair. FRS maintenance will be conducted in accordance with controls discussed in Section 8.2.

6.1.2 Multi-Canister Overpack/Cask Loadout Operations Overview

At the 105-KE Basin, the MCO fuel baskets will be put into the MCO/cask while underwater. The transfer bay crane will be used to hoist the MCO and transport cask together into and out of the south loadout pit. The cask and MCO assembly combined have approximately 7.86 inches of radiation shielding around the fuel. Together these shield operations personnel working in the vicinity of the cask from radiation emanating from the fuel. The immersion pail assembly in the loadout pit is designed so that the MCO/cask assembly will have a minimal exposure to the basin water and the exterior of the cask will be free (at radiological survey detection limits) of all removable contamination when the cask is removed from the basin. The MCO and cask will be sealed and transported to the CVDF full of basin water. A total of

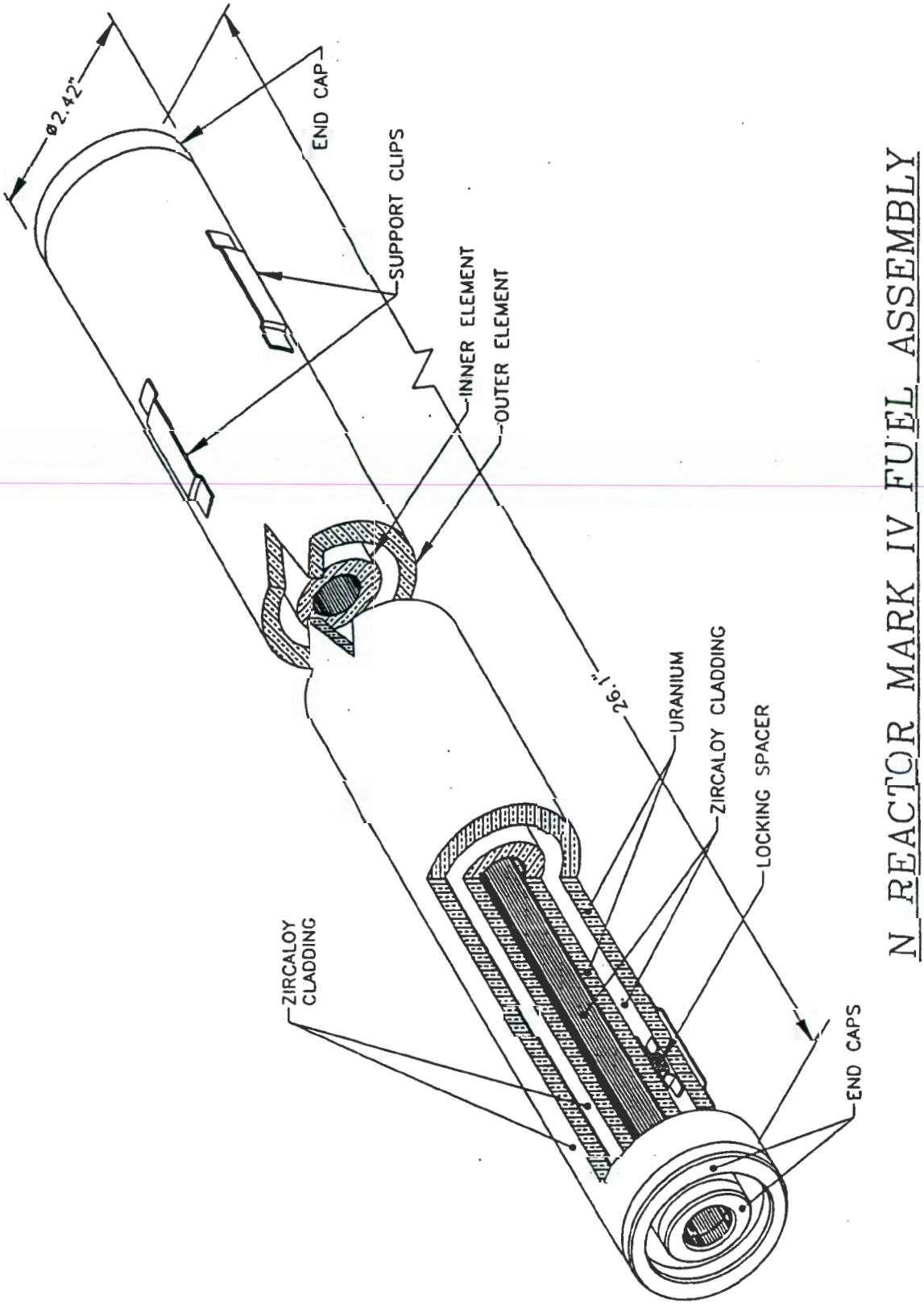

Figure 6-6. Fuel Element with Inner and Outer Elements.

approximately 200 MCOs will be required to remove the fuel from the 105-KE Basin. The MCO casks are reusable.

6.1.2.1 Multi-Canister Overpack. The MCO is fabricated from a (24 inch outside diameter) stainless steel pipe with a 0.5-inch-thick wall (Figure 6-7). The MCO is approximately 13 feet 4 inches long. The bottom is flat with a central depression to allow water to be subsequently removed from the MCO through a central dip tube. The top is a thick shield plug (Figure 6-7) that could be sealed to the body. The shield plug has passages and ports to facilitate the removal of water. Subsequent operations at the CVDF and elsewhere will access the MCO interior via ports.

6.1.2.2 Cask. The cask consists of a cylindrical body fabricated from stainless steel forging(s) with a bolted-on stainless steel lid. The cask incorporates features for ease of loading, decontamination, and routine handling. The design is engineered to minimize cask maintenance and to maximize in-service time.

The overall dimensions of the cask are approximately 15 feet 11 inches long and 41 inches in diameter. The cask is designed to be lifted and placed in a vertical orientation only.

The basic components of the cask are the cask body, closure lid, and the lid bolts. The general arrangement of the cask is shown in Figure 6-8. The closure lid is removable to allow placement and removal of an MCO. The cask lid is secured to the cask body by bolts.

There are two penetrations through the cask, one located in the cask body at the lid end (designated the vent port) and the other in the cask bottom (designated the drain port). The penetrations are used to drain, dry, backfill, and vent the containment boundary, or circulate warm water in the interspace between the cavity wall and the MCO during operations subsequent to the transfer to the CVDF. All cask penetrations will be closed and sealed during transport.

The cask closure lid is a bolted flanged plate made from stainless steel. Lifting trunnions are provided for engagement with the transfer bay crane. One dovetail seal groove is machined in the underside of the lid flange. An O-ring is installed in this groove to provide a seal.

6.1.2.3 Immersion Pail. The immersion pail (Figure 6-9) is a box type of structure that will be used in the loadout pit to provide a physical separation between the interior and exterior surfaces of the cask and the radiologically contaminated basin water. The MCO and immersion pail will be filled with clean deionized water. Refer to Section 6.1.2 for details regarding how this separation of clean water from contaminated basin water will be maintained.

The immersion pail lid is fabricated of stainless steel. The lid will be held in place through seal pressure, dead weight, and bolts to the main pail structure. The lid design limits seal crevices and pool water entrapment,

9713541.0760

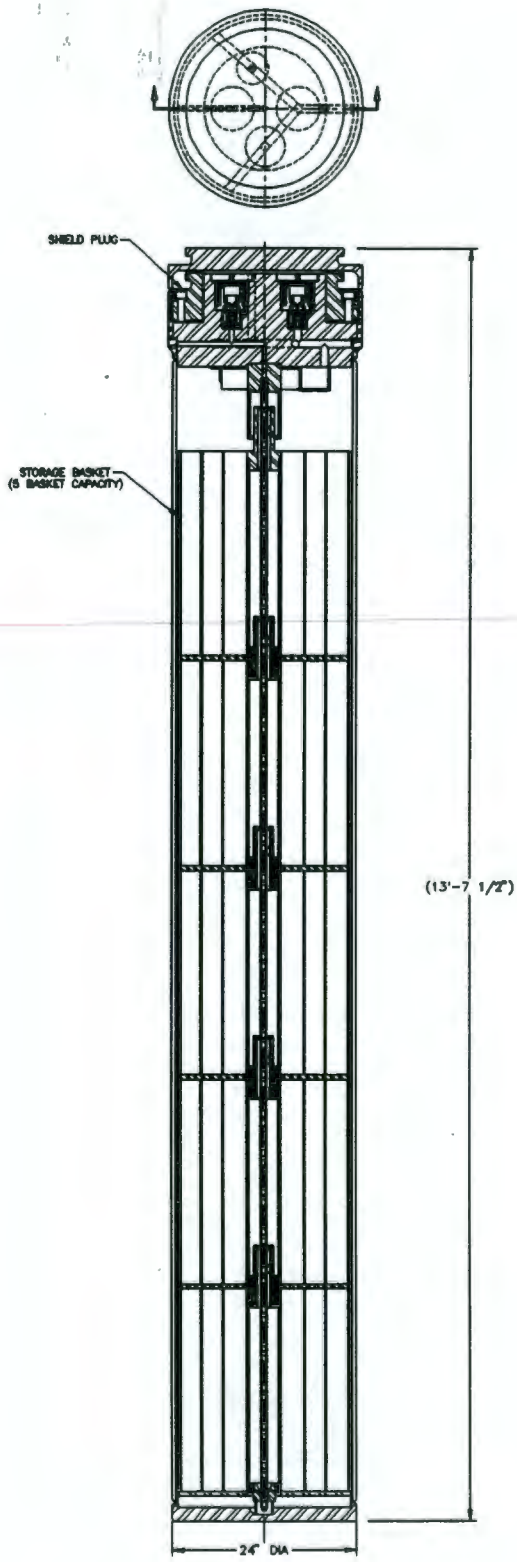

MULTI CANISTER OVERPACK

Figure 6-7. Multi-Canister Overpack with Mechanical Closure Assembly.

Figure 6-8. Cask Assembly.

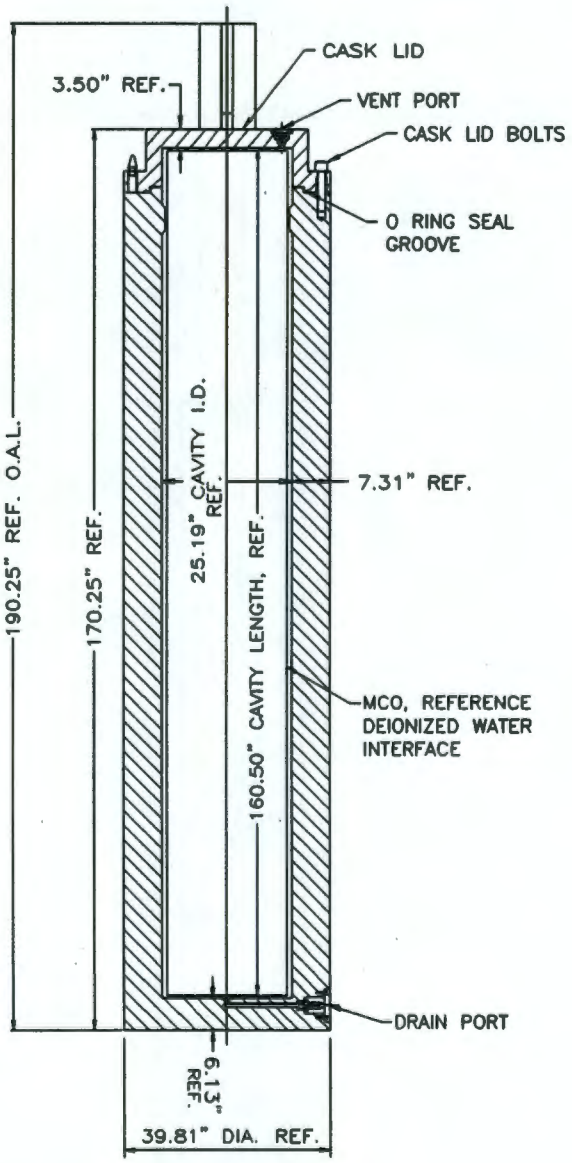

CASK ASSEMBLY
LONGITUDINAL SECTION

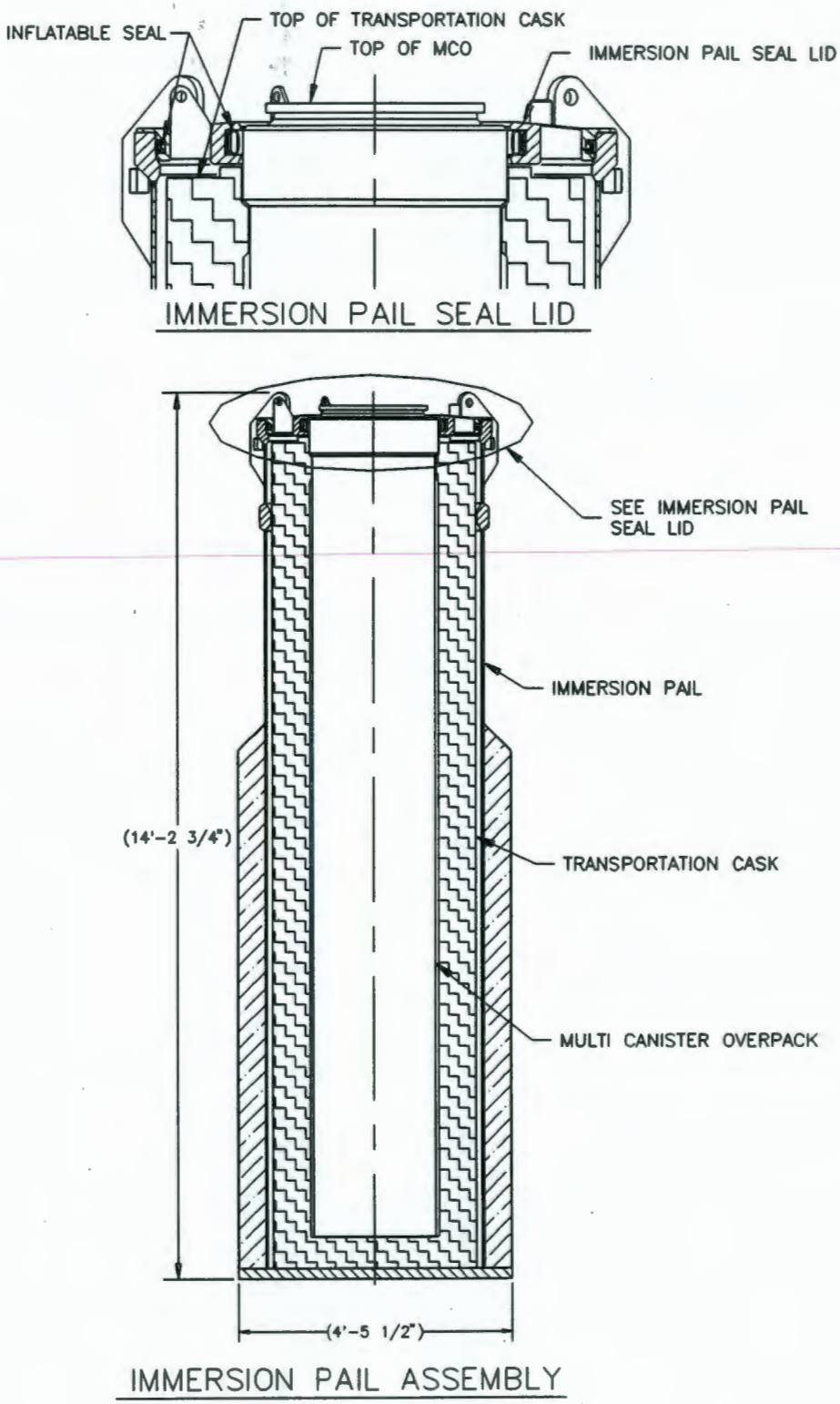

Figure 6-9. Immersion Pail Interfaces.

allows flushing of the seal surface before breaking the seal, and allows clean immersion pail water to flow from the seal boundary when seal pressure is removed. Each of these features will support ease of decontamination during the operation sequence.

The immersion pail with a sealing lid will enclose the cask in a cavity filled with clean deionized water. Pneumatic seal contact surfaces between the immersion pail seal lid and immersion pail, and between the seal lid and MCO, will contain an internal immersion pail positive pressure relative to external hydrostatic pressure during all in-pit operational sequences. Use of the sealed immersion pail precludes contamination by basin water of the exterior and interior surfaces of the cask.

6.1.2.4 Conveyance Vehicle. The conveyance (trailer) vehicle (Figure 6-10) is a semi-trailer that can be attached to a standard tractor. The trailer provides the necessary supports and attachment points for securing the cask in the vertical orientation during transport to the CVDF.

6.1.2.5 Multi-Canister Overpack Loading System. The MCO loading will be accomplished by backing the conveyance vehicle and tractor into the basin at the west end of the 105-KE Building (refer to Figure 6-1). The tractor will be removed from the basin and the rollup door closed. After the cask lid is removed, the cask with (a new) MCO will be lifted by the overhead crane into the immersion pail located in the loadout pit.

Before submerging the immersion pail into the basin, both the MCO and immersion pail will be filled with clean deionized water. A lid will be attached to the immersion pail and will be sealed by inflation. The immersion pail will be lowered to the bottom of the loadout pit and the MCO/cask ready for loading with MCO fuel baskets. The interior of the MCO will be in contact with the basin water.

After loading of MCO fuel baskets, a shield plug will be installed on the MCO while underwater. The assembly (immersion pail with MCO) will be raised to the top of the loadout pit and rinsed with clean deionized water as it exits the basin water to reduce contamination. The exposed surfaces of the MCO shield plug will be decontaminated, the seals deflated, and the immersion pail lid removed and stored. The cask lid will be installed and sealed via bolting. The cask will be lifted via the overhead crane out of the immersion pail. Surveys of the cask external surfaces will be performed to verify contamination removal before loading onto the trailer. After the cask is secure, the rollup door will be opened, the tractor will be reconnected to the trailer, and the cask will be transported to the CVDF.

6.1.3 Integrated Water Treatment System Overview

The IWTS serves the purpose of maintaining basin water quality during fuel retrieval and removal activities. This system integrates existing basin water treatment capabilities associated with current fuel storage operations with features that accommodate the increased radionuclide particulates and dissolved solids expected during fuel removal operations.

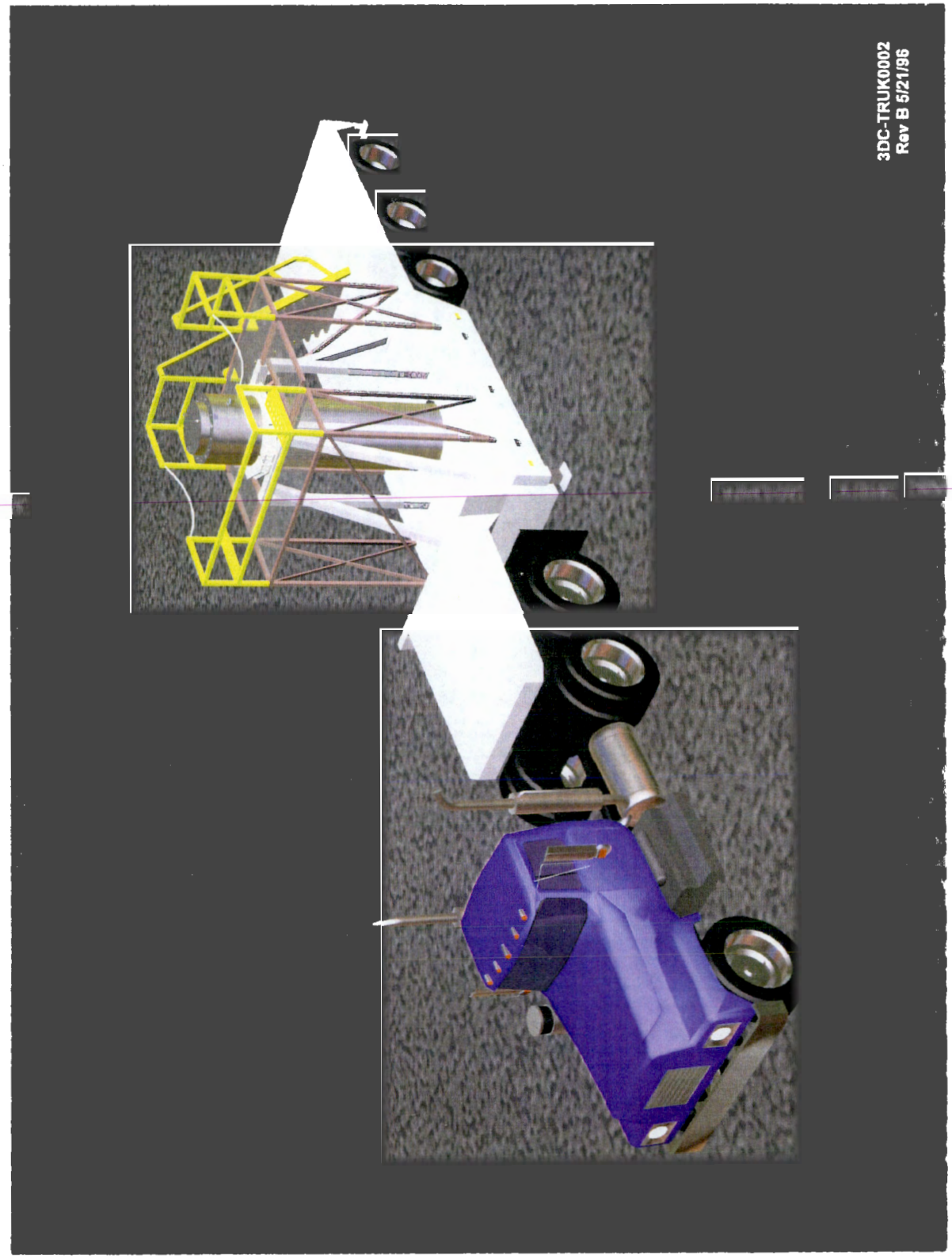

Figure 6-10. Cask and Conveyance System.

This page intentionally left blank.

The IWTS will treat the basin water by filtering, cooling, and providing ion exchange capabilities. Intakes will be configured, as necessary, to provide suction from operations dispersing sludge into the water such as fuel cleaning, sludge pumping, and debris removal. Some of the resulting treated water will be sent to processes as required. Any excess from the IWTS will be returned to maintain circulation throughout the basin. Typical processes of the 105-KE Basin IWTS are depicted in Figure 6-4.

The following activities will require water treatment.

- **FRS Primary Clean Machine**--The discharge from the FRS primary clean machine, via piping connected to an approximately 100-gallon per minute pump, will go underwater and be treated first by one or more of the hydrocyclones. The hydrocyclones will be located in the basin pit (Figure 6-4).

- **Remote Sludge Relocation**--Equipment will consist of a hose underwater, a robotic vacuum cleaner, and an approximately 160-gallon per minute pump. This equipment will relocate sludge from anywhere in the basin, i.e., floor, tops of canisters, and around canister racks. The hose will be connected to the IWTS or to the sludge accumulation area(s) (Figure 6-4).

- **Manual Sludge Movement**--The equipment used for this relocation will be a system similar to a swimming pool cleaner, which consists of a hand-held wand and hoses that go directly to the sludge accumulation area. This process will handle sludge cleanup while the FRS and IWTS are being installed, using the current water treatment system. Once the IWTS becomes operational (refer to Section 6.1.3.5), the hoses also could be routed through the IWTS. The manual system, if required, will remain operational throughout the fuel removal project to supplement the remote system.

- **Canister Cleaning**--Canister cleaning could use a combination of mechanical agitation and high pressure water to clean particulates from empty canisters. Particulates removed from the canisters can be routed, as necessary to maintain clarity, by hose underwater to an area located near the recirculation system pumps. From here piping can be routed above water to the recirculation pumps connection points and be treated first by one or more of the backwashable filters (Figure 6-4).

6.1.3.1 Integrated Water Treatment System. Water in the basin will be managed as a closed-loop system, with the water continually being removed from the basin, circulated through the treatment system, and returned to the basin. The IWTS will maintain water quality and temperature in the basin, while providing the necessary collection of cloudy water, treatment of water, and return of treated water to fuel removal processes as necessary. The IWTS will have the following water treatment processes.

- **Recirculation System**--The IWTS will use the existing basin piping, but will replace the existing recirculation pumps with two (approximately 500 gallons per minute) units located in existing pump locations.

- **Prefilter**--A prefilter will be installed between the primary cleaning machine and the hydrocyclones. The prefilter would be operated entirely underwater and will remove particulates from the water. There are two options for the prefilter. The particulates could be accumulated on a backflushable filter and periodically discharged to the sludge accumulation area. Alternatively, the particles could be retained within disposable prefilters. Disposable prefilters, if used, will be packaged into an underwater container for disposal.

- **Hydrocyclones**--Hydrocyclones will be used to separate sludge/particles from the water. Through valve arrangements, one or more of the hydrocyclones could be dedicated for use for fuel retrieval or sludge retrieval. Concentrated solids from the hydrocyclones will be deposited in the sludge accumulation area(s) (Figure 6-4) for settling.

- **Backwashable Filters**--Main filtration will be undertaken in several filter vessels. The vessels, located in the chiller bay (east end of 105-KE Basin), will use porous filtering material to remove the fines suspended in the water due to the FRS and underwater activities (Figure 6-4). Periodically the particulates will be flushed off the filters to the sludge accumulation area.

- **Ion Exchange Modules**--Soluble radionuclides (including but not limited to cesium and strontium that predominate) present in the basin water will be removed using ion exchange resins contained inside the IXMs. For the 105-KE Basin, ion exchange for removal of soluble radionuclides will be provided by several IXMs located in a 1,500-square-foot annex to be located on the existing radiological waste storage pad north of the basin.

- **Air Cooled Chiller**--An existing chiller, installed in the chiller bay, is used to maintain the basin water temperature and to reduce the amount of radionuclides that enter into the basin water from the corrosion of the fuel.

- **Sludge Accumulation Area**--The IWTS will include provision for the collection of sludge in a confined area(s) or container(s) underwater. The sludge accumulation area(s) will be used to retain sludge and solids collected in the water treatment system. Solids from the hydrocyclones and the backwashable filters will be piped to the accumulation area(s) along with any sludge collected during remote and manual sludge movement activities. Excess water will be returned to the IWTS as a closed-loop system. Thus, the sludge accumulation area(s) will be used as a settling tank for the solids. It might be necessary to provide a cover over the sludge accumulation area(s) for occupational shielding purposes because of the concentration of the source term and decreasing depth of water cover in this area. If it

is necessary to ventilate the airspace under the cover, e.g., to dissipate hydrogen, the exhausted air will be HEPA filtered before reentering the basin airspace as an ALARA best practice. If the HEPA ventilation is installed, a CAM will be operated continuously near the exhaust. Access will be provided to allow personnel to inspect and redistribute the solids as necessary. Multiple sludge accumulation areas could be established during the fuel removal activities. However, the present design involves only use of the weasel pit, which will be provided with an isolation door. Figures 6-1 and 6-4 show the weasel pit location within the basin.

- **Water Return**--Water will be returned to the basin for circulation and project uses. The south side of the basin has the main water return for basin circulation. The other water return will direct water to debris removal, fuel processing, and MCO loadout activities as needs dictate.

- **Annex (IXM Facility)**--An annex will be constructed on the existing radiation storage pad on the north side of 105-KE Basin. This annex will be designed to be a prefabricated structure to house the IXMs, with a floor area of approximately 1,500 square feet. A personnel door will be placed in the north wall of 105-KE Basin and will open into a step-off pad enclosure. After this door is closed, a second door could be opened for access into the annex. This step-off area will separate the contaminated basin from the annex. The annex is planned to be operated as noncontaminated. A personnel door also will be located on the north side of the annex to allow access to the outside during routine work and for emergency egress. For IXM changeout, an overhead door approximately 10 feet by 10 feet will be installed. The IXMs will be moved through this door by an air pallet or similar moving device. Once outside, the IXMs will be removed by portable crane.

  Basin piping will penetrate both the basin/annex walls above ground. This piping will be the inlet and outlet lines for IXMs, IXM drain lines, and air compressor lines plus a drainage sump for emergency spills. Any incidental leakage during changeout of an IXM would be collected and the area decontaminated. The annex will be heated to prevent freezing, but air will not be exhausted to the outside from the annex. Air could be exhausted into the basin from the annex; any contaminated air exhausted from the annex into the basin air space will be HEPA filtered as an ALARA best practice.

- **Cartridge Filters**--Two disposable cartridge filters will be part of the IWTS recirculation system (Figure 6-4). These were part of the original basin water treatment system and are valved out at this time. If required, this system may augment the other IWTS equipment identified previously.

- **Skimmer Loop**--The skimmer loop is located on the north side of the basin and uses a backwashable sandfilter for filtration. The sandfilter, which is part of the original water treatment system,

discharges water to the west bay of the basin after being filtered. When the sandfilter is backwashed, the effluent goes to the north loadout pit and may be backflushed to the sludge accumulation area. The sandfilter could be operated during fuel removal. If required, this system will augment the other IWTS equipment identified previously.

6.1.3.2 Water Addition. At times, water might need to be added to the basin for makeup and cleaning of equipment. An anion/cation deionization system will be used to add clean water. Other uses for this water will be connections for MCO/cask loadout flushing and general future use connection points.

During a major basin leak (earthquake), an emergency fill water system from the service water line is, and will continue to be, in place to fill the basin. This emergency fill water is part of the original water system.

6.1.3.3 Excess Water Removed From the Basin. In the transfer bay area, there will be the capability to remove excess treated basin water through the IWTS piping. Water will be removed via a connection located in the transfer bay. This water will be pumped to a tanker truck and transported to the 200 Area Effluent Treatment Facility (200 Area ETF). The tanker truck will be equivalent to the truck currently being used to transport water from the 100 N Emergency Dump Basin to the 200 Area ETF. The tanker truck will be located either in a transfer bay or in an enclosure adjacent to the facility.

6.1.3.4 Integrated Water Treatment System Operation. The operation of the IWTS has been designed to minimize operator involvement. The IWTS will use manual, remote, and automated techniques for operational control.

- **Operation During IWTS Change Over**--The current water treatment system will remain operational during the installation of new and relocated equipment for the IWTS. It might become necessary to have the current water treatment system offline when connections are made from the current water treatment system. This is planned to be minimal and the water quality will be monitored during this time.

- **Minimum Water Treatment Operation for Underwater Activities**--The IWTS will have the capability to control water quality in the basin. This will be accomplished by bringing those systems online, as needed, to achieve the desired water quality. Minimum system configuration is discussed in Section 8.4. Additional equipment will be placed online as necessary to maintain water quality.

- **Operation of IWTS**--IXM changeout, certain valve special line configurations, sampling, and system surveillances will be performed manually. Remote operations, valving, and other items are designed into the system. Automatic operations will include backwashing filters, sludge relocation operations to the sludge accumulation area, and others designed into the system. All remote and automatic operations will be performed from the EOC. Automatic features will be equipped with manual overrides.

6.1.3.5 Integrated Water Treatment System Maintenance. The IWTS has been designed with appropriate access to facilitate maintenance. The following are general maintenance items for the IWTS.

- Pumps, valves, and associated piping connections are designed for ease of decontamination, replacement, and repair of seals. The design minimizes potential crud traps (such as dead legs, socket welds, and 90-degree bends) and provides for flushing before maintenance or removal operations. Discarded units will be bagged and disposed as solid waste.

- IXMs, located in the annex, will be connected and disconnected manually, moved by air pallet lift or similar moving device inside the annex, and lifted by a mobile crane external to the building onto a truck for disposal as low-level waste. To control spills and drips during changeout, all IXMs will be positioned within a bermed area. Absorbent pad placement around the IXMs, or other methods will be used to contain any spills. This area also will be provided with a sump in case of a pipe break. Leakage will be collected in a sump and returned to the basin. The IXM changeout is projected to occur at approximately 24 units a year.

- The backwashable filter housings, which contain the filter elements, are anticipated to be relatively high dose assemblies and filter media changeouts will be infrequent. The filter media was designed so as to not require frequent changeout during fuel removal activities. However, in the unlikely event that a changeout is needed, an engineered containment will be provided. If it is necessary to ventilate the containment, the exhausted air will be HEPA filtered before reentering the basin air space as an ALARA best practice.

- The hydrocyclones will be used for coarse solids separation to limit filter loadings. Generally, these are very reliable pieces of equipment containing no moving parts. Maintenance of the units is not anticipated to be required. However, the units can be valved to allow for different pathways through the system if necessary. Flushing equipment access will be provided to allow the hydrocyclones to be flushed with water should these become clogged.

- The disposable cartridge filters are original water treatment system equipment. If these become clogged with sludge, the filters will be changed. The spent filters will be loaded underwater into a disposal container.

- The sandfilter currently is backwashed to the north loadout pit, when required, and might be backwashed to the sludge accumulation area.

6.1.4 Sludge Relocation Underwater

Relocation of sludge underwater will be performed as follows.

- **Manual Sludge Relocation**--105-KE Basin floor sludge and canister sludge will be relocated to the sludge accumulation area(s) using the methods described in a previous NOC (DOE/RL 95-65) Debris Removal 105-KE Basin. Sludge will be relocated from areas where FRS and IWTS equipment will be located in the basin. The equipment used for this removal will be similar to that used in swimming pool cleaning, consisting of a hand-held pole with a vacuum head, an underwater pump, and hoses that are routed to the sludge accumulation area. After the IWTS becomes operational, the pump discharge will be routed directly to the hydrocyclones. The manual system will be operational throughout the fuel retrieval project and will supplement the sludge retrieval remote operated system.

- **Remote Operated Sludge Relocation**--This process consists of flexible hoses connected to a powered vacuum unit, which is similar to an underwater robotic vacuum cleaner.

6.2 FACILITY MODIFICATIONS

The following information describes the activities that will occur during the installation of the new equipment (Section 6.1).

6.2.1 General Construction Activities

General construction activities identified thus far include the following. Any additional activities necessary will be conducted within the bounds of projected air emissions identified in Section 11.0, Table 11-2. All activities will be performed using standard personnel protective equipment, ALARA practices, and use specific controls discussed in Section 8.0.

- Above Water Work
  - Drilling including but not limited to steel, wood, asbestos, concrete
  - Asbestos removal and replacement
  - Grinding, cutting, and abrading of metals
  - Carpentry activities
  - Welding activities
  - Electrical wiring installation, reconfiguration, and rerouting
  - Pipe, hose and valve installation; reconfiguration, and rerouting
  - Instrument installation, reconfiguration, and rerouting
  - Heating and cooling equipment installation, reconfiguration, and rerouting that does not impact airflow in or out of the building
  - Paint and coating removal and application
  - Structural steel removal, replacement, reconfiguration, and upgrade
  - Cement, mortar, grouting and concrete removal, replacement, reconfiguration, and installation

- Lifting, hoisting, lowering, dragging, pulling, and pushing of construction supplies and equipment
- Use of gas engines and electric motors
- Use of hydraulic, pneumatic, and electric hand-tools and equipment
- Pump (for transport of water, compressed air or grouting) installation, use, reconfiguration, and removal
- Manually operated equipment installation, reconfiguration, and removal
- Remotely operated equipment installation, reconfiguration, and removal
- Nondestructive testing
- Use of portable heaters for personnel comfort
- Obsolete and unused equipment disconnection and removal
- Debris removal, using controls discussed in Section 8.0 of this NOC.

• Below Water Work
- Drilling including, but not limited to, concrete
- Grinding, cutting, and abrading of metals
- Pipe and hose installation, reconfiguration, and rerouting
- Cement, mortar, grouting and concrete removal, replacement, reconfiguration, and installation
- Obsolete and unused equipment disconnection and removal
- Manually operated equipment installation, reconfiguration, and removal
- Remotely operated equipment installation, reconfiguration, and removal
- Nondestructive testing
- Debris relocation, using controls discussed in Section 8.0 of this NOC
- Pump (for transport of water, compressed air, sludge, and grouting) installation, use, reconfiguration, and removal
- Fuel relocation. (Throughout the lifetime of the facility, small quantities of fuel canisters have been moved during previous activities. Approximately 30 percent of the fuel canisters might require relocation to support FRS equipment installation. Fuel canisters might be moved more than once, i.e. out of the way for equipment installation and later along with other fuel as the canisters enter the FRS. Current methods will be used.

6.2.2 Fuel Retrieval System

The following information describes the activities that will occur during the construction of the FRS equipment previously described in Section 6.1. Any additional activities necessary will be conducted within the bounds of projected air emissions identified in Section 11.0, Table 11-2. All activities will be performed using standard personnel protective equipment and ALARA practices.

• Above Water Work - Installation/reconfiguration of:
- Basin building structural steel and overhead trolley rail upgrades
- Hydraulic system

- Radiation shielding where necessary
- New fuel handling hoists
- Basin grating
- Electrical and mechanical utility services
- EOC.

- Below Water Work - Installation/reconfiguration of:
  - Process table
  - Primary clean machine
  - Manipulators
  - Lights and cameras
  - MCO basket queue
  - Seismic restraints
  - Remaining process equipment.

6.2.3 Multi-Canister Overpack/Cask Loadout System

The following information describes the activities that will occur during the construction of the MCO/cask loadout system previously described in Section 6.1. Any additional activities necessary will be conducted within the bounds of projected air emissions identified in Section 11, Table 11-2. All activities will be performed using standard personnel protective equipment and ALARA practices.

- Above Water Work
  - Reroute miscellaneous conduit
  - Install personnel heaters
  - Install windbreak and upgrade rollup door components
  - Upgrade compressed air system
  - Relocate/install radiation detector
  - Install rinse and decontamination water piping
  - Install electrical and mechanical utilities
  - Decontaminate and seal conveyance vehicle driving surfaces
  - Decontaminate and seal cask receiving area
  - Prepare laydown and decontamination area(s)
  - Upgrade transfer bay crane
  - Upgrade building structure (install/relocate structural steel)
  - Install MCO loading system (above water components and structure)
  - Install immersion pail and support structure (above water components and structure).

- Below Water Work
  - Install MCO loading system (below water components and structure)
  - Install immersion pail and support structure (below water components and structure)
  - Remove canister elevator and general debris from transfer channel
  - Install MCO loading system in south loadout pit (to include sludge/sediment relocation and floor surface preparation including grouting to level floor as necessary).

6.2.4 Integrated Water Treatment System

The following information describes the activities that will occur during the construction of the IWTS previously described in Section 6.1. Any additional activities necessary will be conducted within the bounds of projected air emissions identified in Section 11, Table 11-2. All activities will be performed using standard personnel protective equipment and ALARA practices.

- Above Water Work
  - Install water piping to the loadout pit
  - Erect new IXM annex adjacent to 105-KE Basin
  - Install barrier cover over sludge accumulation area
  - Remove and replace selected portions of grating over the basin water surface
  - Replace basin recirculation pump
  - Install backwashable filter and interconnecting piping to IWTS
  - Install piping from the existing cooling system into the enhanced IWTS
  - Install interconnecting piping from FRS processes and debris removal to IWTS
  - Install electrical and mechanical utility services
  - Install IXMs in annex and interconnected piping to IWTS
  - Install sludge accumulation area(s) pump and interconnected piping to IWTS as described in Section 6.1.4.
  - Install hydrocyclones and intersecting piping to weasel pit.

- Below Water Work
  - Relocate basin floor sludge under IWTS to sludge accumulation area as described in Section 6.1.4.
  - Install barrier door to weasel pit
  - Install pumps and hoses connecting FRS processes and debris removal to IWTS as described in Section 6.1.4.

6.2.5 Water Returns to the 105-KE Basin from Cold Vacuum Drying

During processing at the CVDF, most of the water and some of the particulates will be removed from MCOs. It might become necessary to return the water removed to the 105-KE Basin. If the excess water is returned, the water would be treated first by ion exchange and filtration to reduce the radionuclides.

The liquid at the CVDF will be transferred to the 105-KE Basin by tanker trucks. A temporary building will be provided outside the transfer bay to house the truck unloading/loading area. This temporary area will house a spill containment pan for the tanker, piping, pump, and instrumentation. For unloading, the tanker truck will be connected to the pump using flexible hose and quick disconnect fittings. Any leakage from the fittings will be cleaned up promptly so that the work area is maintained with no smearable radioactive contamination.

The pump discharge will be hard-piped into the basin and routed to the water treatment system. An average of approximately 60,000 gallons of water per year could be transported from the CVDF.

6.3 DEBRIS REMOVAL DESCRIPTION

Debris is defined as anything (e.g., scrap, equipment, and material) that is over 0.25 inch in largest dimension that is not a permanent structure within the basin, is not used for current or planned operations or maintenance activity, and is not fuel or sludge. Debris would include such things as empty fuel canisters, old equipment (e.g., pumps, neutron detectors, other segregation equipment, etc.), hand tools, and miscellaneous irradiated and non-irradiated scrap. The quantity of debris in KE basin is substantial, being estimated at 185 cubic meters (DOE/RL-95-65). Debris will be removed and packaged for disposal in accordance with onsite methods.

The basin debris consists of widely varying forms of material ranging from those items easily cleaned and expected to have low levels of contamination to items that would be difficult to clean and might entrap substantial contamination.

Canisters will be cleaned underwater using mechanical brushing and/or a pressure washer. A high pressure washer currently is installed for the purpose of canister cleaning and consists of rotating nozzles that clean the inner and outer surfaces of the canister. The canisters will be removed from the water into a HEPA filtered ventilated engineered containment that confines the canisters while excess water is drained and while packaging into plastic is accomplished. Alternative underwater washing processes might be employed if the removal of radionuclides would be assured to be reduced to comparable levels achieved with the high-pressure washing system. Alternative cleaning of canisters will not be adopted without testing trial quantities of canisters to evaluate the process. Some canisters, particularly stainless steel, might be candidates for alternative handling because these are more readily cleaned. Canisters will continue to be removed from the water into an engineered containment unless canister smear sampling or actual air samples inside the containment show that the annual emissions would remain within those projected in Section 11.0, Table 11-2. Canisters constitute the largest portion of the debris volume.

Other items that are amenable to cleaning, i.e., smooth, non-porous surfaces, will be cleaned by pressure washing or mechanical brushing to remove surface contamination. Upon removal from the water, these items will be rinsed with relatively clean water (deionized or treated by the IXMs) and promptly bagged in plastic before disposal. Oversized debris, such as handling equipment and pipes, first could be cut to an appropriate size by using a hydraulic cutter underwater or could be cut on removal from the water after applying protective bagging and tape.

Debris that cannot be readily cleaned (e.g., a fire hose) or that remains highly contaminated after cleaning will not be removed directly from the water, but will be removed into an engineered containment as practical.

Containment will be used on all such debris removal except when justified by ALARA review to be ineffective, impractical, or otherwise not justified. In no case will containment be removed if annual emissions would exceed those projected in Section 11.0, Table 11-2.

Some debris with high radiation dose rates could be placed into shielded containers underwater, the container removed from the water, rinsed, decontaminated, and properly dispositioned. Irradiated fuel element hardware would be expected to fall in this category.

Specific Debris Removal Equipment and Operation will be as follows. The monorail, hoist, and trolley will be used for transferring debris underwater in the basin. Long-handled tools used to manipulate items under water will be used as required.

Cutters may be used to size the debris as required. The cutters will either be supplied from a portable hydraulic power pack or be manually operated cutters. Control for the operation of the powered cutter will be provided via a hydraulic valve assembly (closed loop) that controls the cutter in both the forward (cutting) and reverse (release) direction. The motive fluid used in the cutter assembly will be an approved compatible water soluble hydraulic fluid.

High pressure water (approximately 10,000 pounds per square inch) currently is available for cleaning canisters underwater in an engineered system and a hand-held wand also is available for general use. The high pressure nozzles operate at least 4 feet below the water surface. In addition, commercially available pressure washers that operate at lower pressures also are available at the basin. The pressure washers can be supplied from either the IXM discharge water, general basin water supplied from an underwater pump submersed in the basin, or deionized water. The lower pressure washer systems consist of a hand-held cleaning wand and other cleaning fixtures as required by the specific application. The lower-pressure washer nozzles are operated far enough below the water so as to not cause the surface of the water to become disturbed.

As mentioned previously, an engineered containment will be employed as a general practice, except when it is clearly demonstrated by ALARA review to be impractical or ineffective. In all cases, emissions will be controlled to not exceed those projected in Section 11.0, Table 11-2. Containment forms range from a rigid structure that is ventilated (e.g., greenhouse) or a glovebox or glovebag that might or might not be ventilated. If ventilated, a HEPA filtered exhaust will be used.

When the debris has been properly prepared (bagged, painted, wrapped, etc.), the debris will be moved to a disposal container located near access doors at the 105-KE Basin. Debris will be packaged in accordance with onsite methods.

This page intentionally left blank.

7.0 ANNUAL POSSESSION QUANTITY AND PHYSICAL FORM

(Requirements 8, 10, 11, and 12)

It is noted that the following discussion is presented to provide the reader with an understanding of the approximate quantity of radioactive material to be handled during the course of the proposed activities. However, the inventory identified is not used to directly calculate the projected emissions in Sections 10.0 and 11.0.

The 105-KE Basin contains approximately 1,150 metric tons of uranium N Reactor fuel (approximately 3,700 canisters) and five containers filled with 138 aluminum-clad fuel elements (0.4 metric tons of uranium) from the SPR. The N Reactor fuel consists of slightly enriched metallic uranium completely enclosed and bonded to a layer of zirconium alloy (Zircaloy-2), also known as the cladding. Two elements are combined together to form a fuel assembly (refer to Chapter 6.0, Figure 6-7). The SPR fuel is very similar, except the fuel is of smaller dimensions and is clad in aluminum. The cladding is designed to provide a barrier against the escape of the radionuclide source term (fission products and fissile materials).

The N Reactor fuel was discharged between 1975 and 1987. The fuel has decayed sufficiently to essentially eliminate iodine-131, as well as other short half-life radionuclides. Following discharge of the fuel from the N Reactor, the fuel was allowed to cool for a minimum of 150 days in N Basin. The fuel was placed into open-top canisters, loaded into railcars, and transported to the 105-KE Basin for storage.

The fuel cladding integrity varies from undamaged cladding that retains the radionuclide source term, to fuel that has breached its cladding from reactor defueling and subsequent handling operations. The cladding breaches range from cracking to the complete separation of fuel elements into two or more parts. Once the cladding has been breached, and the basin water gains access to the radionuclide source term, the radionuclides in the fuel either dissolve or corrode slowly over time. For example, radionuclides with high solubilities such as cesium and strontium dissolve into the basin water while less soluble radionuclides are oxidized (corroded), released from the fuel elements, and incorporated into the sludge or suspended in the water.

7.1 SOURCE TERM DESCRIPTION

The following sections provide a discussion on fuel elements, basin water, sludge, surface contamination, and the annual possession quantity.

7.1.1 Fuel Elements

The radionuclide inventory of the irradiated fuel is shown in Table 7-1, decayed to December, 31, 1997. The irradiated fuel is the total source term in 105-KE Basin. The source term for all the potentially significant constituents is presented in Table 7-1 [constituents with an activity of less than one curie each were not included, but are available in the source document (WHC 1995a)]. The quantity presented in Table 7-1 represents the total available inventory of the basin, whether still in the fuel, in the water, or in the sludge.

Table 7-1. 105-KE Basin Radionuclide Inventory (Source Term).

Radionuclide	Inventory (Ci)	Radionuclide	Inventory (Ci)
^{3}H	1.84 E+04	^{137}Cs	6.61 E+06
^{14}C	3.62 E+02	$^{137}Ba^{m}$	6.255E+06
^{55}Fe	1.08 E+03	^{144}Ce	1.09 E+03
^{60}Co	1.96 E+03	^{144}Pr	1.08 E+03
^{59}Ni	2.11 E+01	$^{144}Pr^{m}$	1.31 E+01
^{63}Ni	2.31 E+03	^{147}Pm	2.73 E+05
^{79}Se	4.35 E+01	^{151}Sm	8.95 E+04
^{85}Kr	2.92 E+05	^{152}Eu	4.77 E+02
^{90}Sr	5.01 E+06	^{154}Eu	5.48 E+04
^{90}Y	5.01 E+06	^{155}Eu	1.19 E+04
^{93}Zr	2.01 E+02	^{234}U	4.66 E+02
$^{93}Nb^{m}$	1.24 E+02	^{235}U	1.77 E+01
^{99}Tc	1.45 E+03	^{236}U	6.61 E+01
^{106}Ru	1.84 E+03	^{238}U	3.80 E+02
^{106}Rh	1.84 E+03	^{237}Np	3.02 E+01
^{107}Pd	8.59 E+00	^{238}Pu	6.07 E+04
$^{113}Cd^{m}$	1.84 E+03	^{239}Pu	1.15 E+05
$^{119}Sn^{m}$	3.82 E-01	^{240}Pu	6.38 E+04
$^{121}Sn^{m}$	4.03 E+01	^{241}Pu	2.60 E+06
^{126}Sn	8.07 E+01	^{242}Pu	3.07 E+01
^{125}Sb	1.88 E+04	^{241}Am	2.03 E+05
^{126}Sb	1.13 E+01	^{242}Am	1.14 E+02
$^{126}Sb^{m}$	8.07 E+01	$^{242}Am^{m}$	1.14 E+02
$^{125}Te^{m}$	4.57 E+03	^{243}Am	7.12 E+01
^{129}I	3.26 E+00	^{242}Cm	9.42 E+01
^{134}Cs	7.99 E+03	^{244}Cm	8.84 E+02
^{135}Cs	3.96 E+01		
		Total	2.67 E+07

Source: WHC 1995a (only those isotopes with an activity greater than 1.0 curie reported).

7.1.2 Basin Water

The water in the 105-KE Basin provides both cooling and shielding. The sludge and fuel are immersed in 1.3 x 10^6 gallons of water. Even with the large size of the source term in the fuel and sludge, the source term in the basin water is relatively small.

Table 7-2 represents data from a routine analysis for selected basin radionuclides taken on February 20, 1996. Predominant isotopes present in the water were tritium (15 curies), strontium-90 (10 curies), and cesium-137 (17 curies). Except for tritium, varying levels are achieved depending on the operation of the water treatment systems. These data are presented for information as to the relative quantities present in the water.

Table 7-2. Radionuclides in 105-KE Basin Water (February 20, 1996).

Isotope	Concentration (microcuries per milliliter)	Activity (curies)
^{241}Am	6.50 E-06	0.03
^{134}Cs	2.05 E-06	0.01
^{137}Cs	3.45 E-03	16.91
^{60}Co	1.06 E-06	0.01
^{152}Eu	3.44 E-06	0.02
Eu^{154}	2.99 E-06	0.01
^{155}Eu	6.62 E-06	0.03
^{238}Pu	1.71 E-05	0.08
$^{239/240}Pu$	2.94 E-05	0.14
^{90}Sr	2.06 E-03	10.09
^{3}H	3.06 E-03	14.99
Total		42.33

Note: Volume of basin assumed to be 4.9 E+09 milliliters, (1.29 E+06 gallons).

The radionuclides of significance in the airborne emissions are known to be particulates that originate from the basin water. The primary mechanisms responsible for airborne contamination are transport at the water line of the basin, and resuspension of surface contamination on basin floors, gratings, and tools (WHC 1993b).

7.1.3 Sludge

Detailed estimates (WHC 1995a) previously have been made of the volume of sludge distributed in the basin and of constituents in the basin. Studies currently are ongoing to better define and characterize the sludge to produce more refined estimates for the purpose of future plans for disposal. During

the activities described in this NOC, all sludge, except for that already in the weasel pit, will be relocated to the sludge accumulation area(s).

Recent studies have revised earlier sludge volume estimates of 51 cubic meters up slightly to 53 cubic meters (WHC 1996b). An estimate of the volume of sludge to be relocated underwater, including that generated by fuel removal operations, can be determined by excluding the weasel pit and amounts to slightly less than 44 cubic meters (Table 7-3). The volume estimates are for 'wet' sludge, i.e., as the sludge resides in the basin.

The source term of the sludge is shown in Table 7-4. Information in Table 7-4 is based on the smaller projection of 51 cubic meters and represents the composite sludge samples from the floor of the basin (does not include sludge from the canisters). The sludge inside the canisters, which is expected to be minor in volume is expected to have a higher radionuclide content. The floor sludge radionuclide content is expected to be lower than the canister radionuclide content because of dirt and debris (i.e. dilution). The sludge in the canisters has been sampled; however, sample data are not available. The results will be provided as soon as available. Table 7-4 presents information as to the relative magnitude of the sludge source term. It is noted at this point that although there exist certain unknowns associated with the sludge, there are good data that clearly describe the impact of sludge movement, on a large scale, on emissions to basin air. This discussion is provided in Section 10.3.

To estimate that portion of the total inventory of SNF that is in the basin sludge, the following methods were used:

Using the amount of Pu 239/240 from Table 7-4 in the floor sludge divided by the amount of Pu 239 and 240 in 105-KE Basin Inventory (Table 7-1) equals the following:

(260 Ci of Pu239/240 in sludge divided by 188,100 Ci of Pu239/240 in Fuel) x 100 = 0.14%

Alternatively, K-Basin Corrosion Program Report (WHC 1995b) states that the amount of KE fuel that exists as uranium oxide is equal to 4.3 metric tons. Converting to a uranium metal basis, this equals 3.79 metric tons of uranium. Further, as previously stated in Section 7.0, there are 1,152 metric tons uranium in the SNF. Using the previous logic, it can be confirmed that the estimate of 1 percent is bounding.

(3.79 mtu of uranium in sludge divided by 1,152 mtu in SNF) x 100 equals = 0.33%

These quantities are likely to be revised upward, but still would not exceed 1 percent.

This information was not developed for predicting emissions, only to show what fraction of the source term is in the sludge versus the spent fuel.

Table 7-3. Estimated 105-KE Basin Sludge Volumes.

Location	Volume (cubic meters)
Fuel canisters, containing fuel	7.45
Basin and other areas, except weasel pit	31.21
Weasel pit	8.92
Generated during fuel removal*	5.22
Total	52.8

*Estimated at 70 percent of sludge presently in canisters containing fuel.

Table 7-4. Calculated 105-KE Basin Sludge Relocation Inventory.

Radionuclide	Inventory (curies)
^{60}Co	2.86 E+01
^{90}Sr	1.33 E+03
^{90}Y	1.33 E+03
^{137}Cs	1.01 E+03
^{137}Ba-m	9.55 E+02
^{154}Eu	2.98 E+01
^{155}Eu	1.70 E+01
^{238}Pu	6.60 E+01
$^{239/240}Pu$	2.60 E+02
^{241}Pu	5.66 E+03
^{242}Pu	4.36 E-02
^{241}Am	7.69 E+02
Total	9.17 E+03

7.1.4 Surface Contamination

Most of the interior of the 105-KE Basin has measurable surface (removable) contamination. Weekly surveys are performed to measure the levels and assess changes in these levels. An administrative control level of

10,000 d/m/100 cm^2 of β-γ and 500 d/m/100 cm^2 α is employed, above which the contamination levels are required to be reduced by decontamination to the extent practical. Radiological control requirements dictate that any areas above 100,000 d/m/100 cm^2 of β-γ and 2000 d/m/100 cm^2 α be posted "DANGER, HIGH CONTAMINATION AREA". There is only one small (<10 square feet) area of the basin piping underneath lead shielding that is permanently posted as discussed. This area is not accessed routinely and will not be disturbed in the performance of the activities described in this NOC.

Therefore, most above water activities described in this NOC are expected to be conducted with contamination levels less than the administrative control levels, or less than 10,000 d/m/100 cm^2 of β-γ and 500 d/m/100 cm^2 α.

7.1.5 Multi-Canister Overpack Source Term

The maximum source term present in an MCO represents 5 MCO baskets per MCO and 54 Mark IV (design of fuel stored in 105-KE Basin) assemblies per MCO basket, or 270 fuel assemblies. Because the maximum weight of a fuel assembly is 23.6 kilograms, a total of 6,372 kilograms of fuel could be present in an MCO. This quantity is 0.55 percent of the (6.3/1,150) Table 7-1 inventory.

7.1.6 Multi-Canister Overpack Particulate

The average particulate in an MCO, described in a previous NOC (DOE/RL-96-76) was estimated at up to 5.95 kilograms of sludge (metallic uranium) at the time of transfer to the CVDF. This is presented for information and continuity and might not be particularly relevant because the MCO/cask will be sealed before leaving the water for transport. The MCO, while vented, will be contained within a sealed cask.

7.2 ANNUAL POSSESSION QUANTITY, PHYSICAL FORM, RELEASE FORM, AND CHEMICAL FORM

The annual possession quantity is identified in Table 7-1. Table 7-5 represents data on some of the more significant isotopes and their release forms. Tritium and krypton are released routinely during basin operation because of ongoing fuel corrosion, while the balance of the isotopes are released as particulate solids. As the fuel corrodes, complex compounds are produced that are not easily categorized.

Physical form, release form, chemical form, and radionuclides that could contribute greater than 10 percent of the potential to emit total effective dose equivalent to the maximally exposed individual are identified in Table 7-5. For ICRP 30 solubility, default solubility classes from CAP-88 code were used for all radionuclides (EPA 1990).

Table 7-5. Physical Form, Release Form, and Chemical Form.

Radionuclide	Physical form	Release form	Chemical form*
^{3}H	solid	vapor	water
^{60}Co	solid	particulate solid	various
^{85}Kr	solid	gas	elemental
^{90}Sr	solid	particulate solid	various
^{137}Cs	solid	particulate solid	various
^{238}Pu	solid	particulate solid	various
$^{239/240}Pu$	solid	particulate solid	various
^{241}Pu	solid	particulate solid	various
^{241}Am	solid	particulate solid	various

* Radionuclides identified as various form numerous complex compounds.

This page intentionally left blank.

8.0 CONTROL SYSTEM (Requirement 6)

The 105-KE Basin does not provide for inlet supply air and exhausted air is not filtered. Air is exhausted from the building via roof vents, two over the basin and two over the high bay area.

All radioactive particulates providing the potential for airborne emissions from the 105-KE Basin will or have originate(d) from the basin water. The primary mechanisms responsible for airborne contamination are transport at the water line of particulates from the basin and suspension of surface contamination on floors, gratings, and tools (WHC 1993b).

8.1 CONTROL EQUIPMENT

The existing abatement technology consists of water treatment equipment, chiefly IXMs, used to support the storage operations. Additional treatment equipment components have been designed and will be operated to support the fuel removal activities to control the source term in the water. The application of these radionuclide controls are in accordance with ANS-57.7 (ANS 1988).

8.1.1 Basin Water

The basin water consists of the 1.3×10^6 gallons of water that cover the irradiated fuel. The basin water is an inherent part of the fuel storage process. The water precludes the radionuclide source term from becoming directly airborne as might occur if the water were absent. The water also provides radiation shielding. Fuel handling operations described in this NOC will be conducted underwater.

8.1.2 Existing Water Treatment

The existing water treatment takes place normally with a single IXM and an air cooled chiller. This treatment is a normal part of fuel storage operations. Cartridge filters are available for water treatment, but normally are not applied because of high radiation exposure to personnel during changeout and the cost for disposal.

8.1.3 Integrated Water Treatment System

The IWTS (Section 6.1.3) provides for the removal of particulates and an increased capacity for removal of radionuclides from the basin water. The IWTS provides capability beyond that of the existing water treatment system and has been engineered to meet the increased source term that will be added to the water during fuel handling activities.

8.2 CONTROLS FOR ABOVE WATER ACTIVITIES

Specific controls will be applied, as necessary, for individual water activities. However, the construction activities described will involve, to the most degree, uncontaminated new equipment. Where existing above water contaminated equipment or structures are involved that will be disturbed, ALARA practices will be followed to minimize emissions. Contaminated areas will be decontaminated before work, as practical, or engineered controls such as glovebags, fixatives, ventilation or containment will be applied when practical to do so. Any surface contaminated materials removed will be bagged promptly in plastic and packaged for disposal during routine transports.

Maintenance activities performed on fuel removal equipment will follow current ALARA practices. These activities will be conducted in accordance with routine activity contamination control practices, e.g., glovebags, decontamination, fixatives, etc., thus minimizing the potential to emit. Any items that need to be removed from the water will be rinsed upon removal from the water; if these items need to be left out of the water, the items will be bagged in plastic for storage. Maintenance on components that directly contact the fuel, e.g., end effectors on manipulators, will be conducted within a confinement enclosure such as glovebag or HEPA ventilated enclosure.

8.3 CONTROL EQUIPMENT EFFICIENCIES

The water treatment system contains ion exchange components for removal of radionuclides and particulate filters for removal of particulate radionuclides. Removal efficiencies are presented in Tables 8-1 and 8-2. The removal efficiencies for IXMs decrease with increasing run time. The IXMs are changed out when sampling indicates the removal efficiency for cesium-137 decreases from 99 percent to approximately 70 percent. Time between changeouts varies and depends on basin water quality; changeouts are expected to occur every few weeks.

Table 8-1. Average Radionuclide Maximum Removal Efficiencies of the 105-KE Basin Water Treatment System Components.

Radionuclide	Ion exchange module (%)
Strontium	99
Cesium	99
Plutonium	81

Table 8-2. Projected Particulate Removal Efficiencies of the 105-KE Basin Water Treatment System Components.

Component	Nominal flow rate	Remarks
Prefilter	100 gallons per minute	Removes canister sludge and fuel particles. Varying filter sizes available.
Hydrocyclones	80 gallons per minute each	Removes suspended solids; 98 percent removal for particulate greater than 40 microns.
Backwashable filter	1,400 gallons per minute each	Varying filter sizes available.
Sandfilter	400 gallons per minute	Particulate removal at 10 microns.
Cartridge filter	450 gallons per minute each	Disposable for cartridge filters 5 micron in size, (varying filter sizes are available).

The radionuclide particulate from the primary clean station and remote operated sludge machine normally will be removed first by the hydrocyclones and filtered by the backwashable filters. The sandfilter and cartridge filters are available to augment the IWTS if required. The sandfilter is backwashed infrequently, normally every several months, depending on basin water quality. The cartridge filters, if used, could require changeout every few weeks to months.

8.4 INTEGRATED WATER TREATMENT SYSTEM OPERATIONAL CONTROLS

The minimum configuration of the IWTS will be at least one backwashable filter or sandfilter, or cartridge filter and at least one IXM, will be operated when underwater fuel handling operations are performed.

The other elements of the IWTS will be operated selectively depending on water quality process needs. Should the IWTS fail entirely during underwater fuel handling, the operations involving fuel already on the process table may be completed followed immediately by a safe and orderly shutdown.

Prefilter--A prefilter will be installed between the primary cleaning machine and the hydrocyclones. The prefilter would be operated entirely underwater and will remove particulates from the water. There are two options for the prefilter. The particulates could be accumulated on a backflushable filter and periodically discharged to the sludge accumulation area. Alternatively, the particles could be retained within disposable prefilters. Disposable prefilters, if used, will be packaged into an underwater container for disposal.

This page intentionally left blank.

9.0 MONITORING SYSTEM (Requirement 9)

The 105-KE Basin does not provide inlet supply air and exhausted air is not filtered. Air is exhausted from the building via roof vents, two over the basin and two over the transfer high bay area. The combined air flow from the four roof vents is 848 cubic feet per second (WHC 1993c).

The sampling system inside the 105-KE Basin consists of three fixed head samplers. The design of the fixed head samplers allows the filter head to be lowered or elevated for safe changeout and sample collection. The particulate filters from the three samplers are collected weekly. The particulate filters are currently delivered to Quanterra Environmental Services of Richland, Washington. Quanterra Environmental Services performs total alpha/beta analyses on the particulate filters. The contractual detection limits for Quanterra Environmental Services are 1 picocurie per sample. For a typical sample, this is approximately 4.4 E-16 microcuries per milliliter. Weekly filters are composited for a monthly gamma scan, strontium-90, americium-241, and plutonium isotopic analysis. The particulate radionuclides contributing 10 percent or more of the total effective dose equivalent from 105-KE Basin are plutonium-239/240, plutonium-241, and americium-241. Of the air emissions measured for calendar year 1995 at 105-KE Basin, 10.0 percent of the alpha emitting actinides were plutonium-238, 65.5 percent were plutonium-239/240, and 24.5 percent were americium-241 (DOE/RL-96-37).

The three samplers are located as follows: two are located over the 105-KE Basin and one is located in the transfer high bay area. The samplers over the 105-KE Basin are positioned directly in front of roof vent 11 and roof vent 10, the inlet to the exhaust fans. The sample head filter assembly is attached to an adjustable support extended to the inlet of the fan, about 11.1 feet above the floor. The third sampler is in the transfer high bay area near exhaust fans roof vent 6 and roof vent 7. The filter assembly for the high bay sampler is approximately 20 feet above the floor. Figure 9-1 identifies the relative position of these fixed head samplers.

The sampler system design eliminates any sample line loss concerns. The particulate filter employed is a 1.85-inch-glass fiber filter with a 91 percent capture efficiency for particles with a median diameter of 0.3 micron. The sample filter assembly is connected to a vacuum pump via plastic tubing. Because the particulate filter is upstream of the plastic tubing, the particulate filter is not influenced by the tubing. The sample pumps are equipped with a flow regulator. The nominal sample flow rate is a 2.12 cubic feet per minute.

Operational checks of the exhaust fans and the sample pumps are performed daily. In the event a fan is found not operating or is de-energized for any reason, the sampler is turned off until the exhaust fan is returned to service. The operability information for the samplers and exhaust fans is logged and reported to monitoring program personnel. The sample pump flow rate is checked bi-weekly using a calibrated National Institute of Standards and Technology traceable flow meter.

In addition to the system described previously, near-field ambient air monitoring currently is being performed at several locations around the 105-KE Basin. Three monitors, designated as N-402, -403 and -404 will continue to be operated until changes are approved by the DOH. A fourth sampler, designated as N-401 also is in current operation. However, DOH has approved plans to discontinue use of this sampler and sampling at this site may be discontinued. Figure 9-2 shows the current locations of the four monitoring points.

9713541.0776

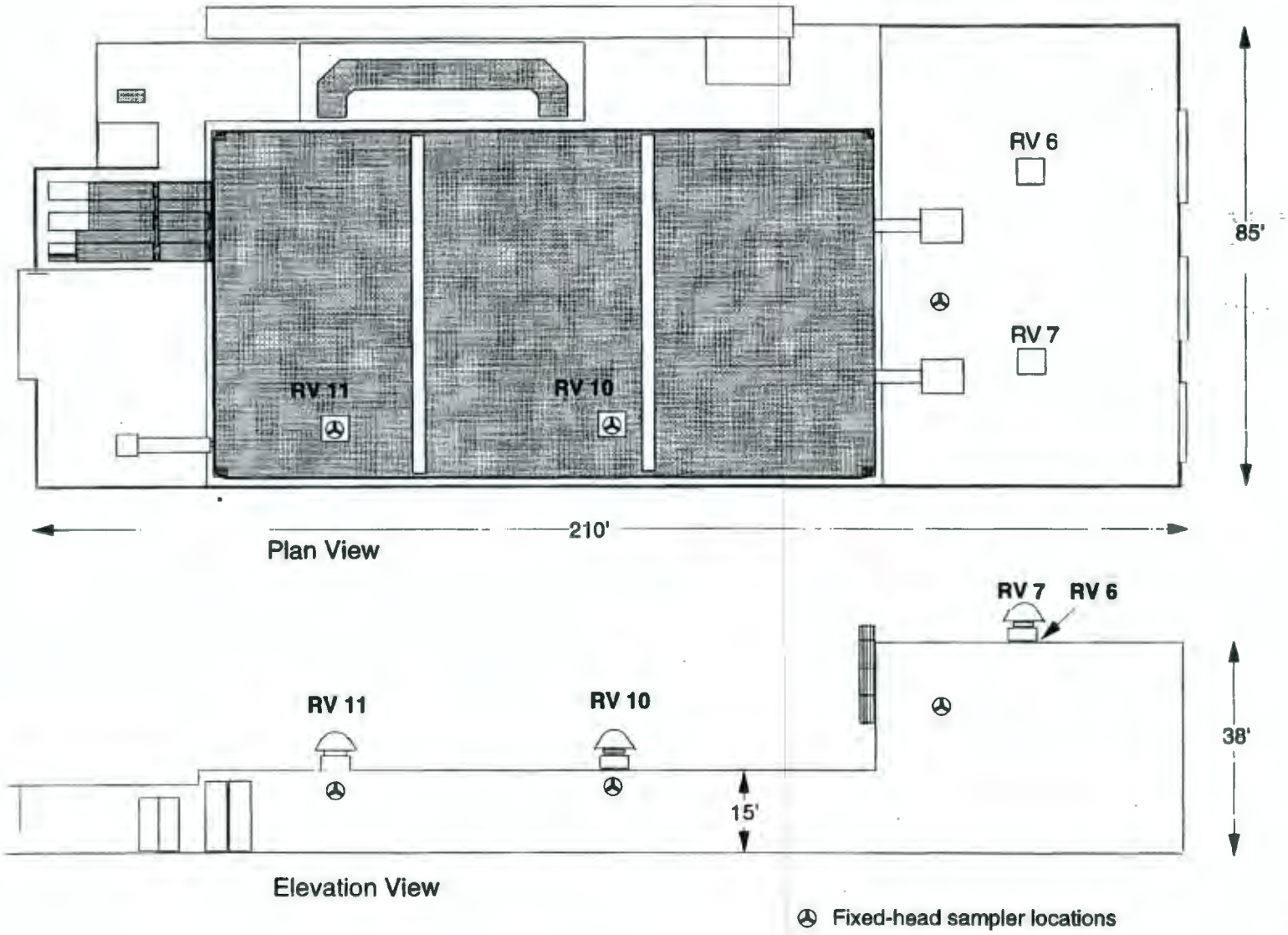

Figure 9-1. Fixed Head Sampler Positions.

970204.1004

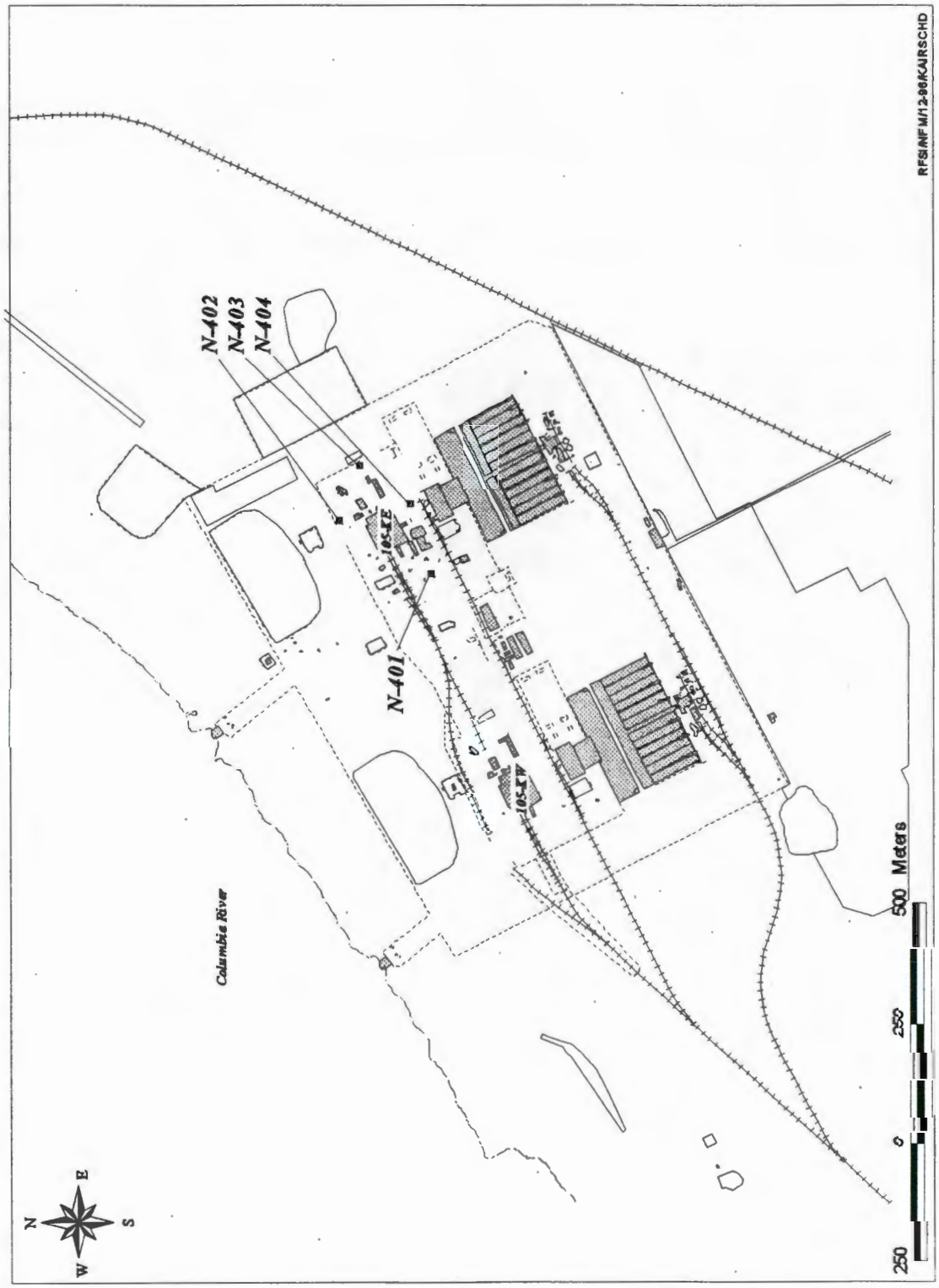

Figure 9-2. Locations of Near-Field Monitoring Locations.

10.0 RELEASE RATES (Requirement 13)

The following provides projections of potential emissions based on good engineering judgment, actual emissions data, and the required assumptions regarding absence of emissions control equipment.

10.1 PROJECTED EMISSIONS BASED ON GOOD ENGINEERING JUDGMENT AND EMISSIONS DATA

The average concentration data for the good engineering judgment presented in the Debris NOC (DOE-RL-95-65, Table 10-2) and the earlier Encapsulation NOC (DOE/RL-93-13, Table 4-6) were reviewed and are applicable for this NOC with the exception of two isotopes, plutonium-241 and americium-241, which will be discussed later. Table 10-1 below represents a projection of the estimated (abated) emissions for fuel retrieval based on good engineering judgment.

Table 10-1. Good Engineering Judgment Projected Emissions Using Fixed Head Sampler (RV11) Data

Radionuclide	Average concentration (μCi/mL)	Projected annual emissions (Ci/yr)
^{60}Co	1.5 E-14	1.2 E-05
^{90}Sr	7.5 E-13	6.2 E-04
^{106}Ru	3.3 E-14	2.7 E-05
^{137}Cs	6.4 E-13	5.3 E-04
^{238}Pu	6.9 E-15	5.7 E-06
$^{239/240}$Pu	4.2 E-14	3.4 E-05
^{241}Am	2.9 E-14	2.4 E-05
^{241}Pu	1.4 E-12	1.2 E-03
Total		2.4 E-03

The projected annual emissions presented do not include tritium (^{3}H). Multiplying the concentration of ^{3}H in the basin water by the evaporation rate of the basin water yields the amount of ^{3}H released per year.

Concentration of ^{3}H in basin water (WHC 1993b) = 3.0 E-03 μCi/Ml.

Evaporation rate of the basin water = 41.6 liters per hour.
(3.0 E-03 μci/mL)(4.16 E+04 mL/hr)(8,760 hr/year)(1 E-06 Ci/L μCi) = 1.2 Ci/year of ^{3}H.

Most of the projections presented in Table 10-1 were developed from actual data (concentrations) obtained from the fixed head sampler (RV11) (Chapter 9.0, Figure 9-1) for the period October through December 1992. Chapter 9.0 presents a description of the fixed head sampler. The two exceptions to this are plutonium-241 and americium-241 for which insufficient data were available during this sampling period.

This sampling period was selected for two reasons. First, the extensive sludge pumping and sludge debris raking during this time resulted in increased suspension of radionuclides in the basin water. Second, the radionuclides in the water were elevated further by shutdown of the water treatment system during October and the first 2 weeks of December 1992. The shutdowns of the water treatment systems were necessary to replace the existing water-cooled chiller with a new air-cooled chiller and to minimize the generation of transuranic waste associated with operation of the ion exchange columns. The combination of the increase in suspended sludge and the necessity of the water treatment system shutdowns during this period resulted in radionuclide concentrations in the water that afforded a bounding case projection of air emissions. Because most of the activities described in this NOC involve handling the source term underwater, the use of the earlier data is applicable.

As noted previously, limited data describing airborne radionuclide concentrations were available in 1992 for americium-241 and plutonium-241. A revised airborne concentration for americium-241 was developed in the Debris NOC (DOE/RL-95-65), and has been reviewed and accepted as reflected by DOH approval of the NOC. In the case of plutonium-241, data collection for airborne emissions only began in February 1995. Recent data from this sampling activity, regarding airborne concentrations of ^{241}Pu, were provided to DOH on March 27, 1996 (DOE/RL 1966). That same data have been used to estimate ^{241}Pu emissions set forth in Table 10-1.

The projected annual release for each radionuclide was calculated by multiplying the individual radionuclide concentration by the maximum annual flow rate with all four vent fans operating continuously. Formulas for the flow rate and projected annual emission of each isotope in Table 10-1 (with the exception of tritium) are as follows:

Annual Flow Rate:

$$(60 \text{ minutes/hour})(8{,}760 \text{ hours/year})(54{,}781 \text{ ft}^3\text{/minute})^{1}$$
$$(28.32 \text{ L/ft}^3)(1{,}000 \text{ mL/liter}) = 8.2 \text{ E+14 mL/year.}$$

Expected Annual Emission:

$$(\text{concentration } \mu\text{Ci/mL})(10 \text{ E}^{-06} \text{ Ci/}\mu\text{ci})(8.2 \text{ E+14 mL/year}) = \text{Ci/year.}$$

The projected annual emission for tritium was calculated by multiplying the concentration of tritium in the basin water by the evaporation rate of the basin water to yield the amount of tritium released.

---

[1] The maximum measured flow rate is used in projecting emissions. This is the same value that is used in reporting actual facility emissions.

Table 10-1 emissions include above water activities. The following above water activities can be considered as three general cases.

(1) **Construction activities** involve structural and piping reconfigurations to the building not unlike those activities that have been performed during previous piping reconfigurations, pipe cleaning, and discharge chute door installation. Historically, there have been no well defined tangible effects from these activities on emission measurement data provided controls such as those proposed in Chapter 8.0 are employed. Because the construction activities will occur largely before operations, which involve handling the fuel underwater, with associated effects on projected air emissions, the emission estimate should bound the construction activity emissions.

(2) **Operational activities** during fuel removal activities above water largely involve movement of fuel canisters with the hoist/trolley system and transport of the MCO/casks. Fuel and empty canister movements have been conducted in the basin at a rate comparable to that required for fuel removal. There also have been cask transports made out of the basins that had more contaminated surface area than the MCO/cask will involve. None of these activities has shown a tangible effect on emission measurement data. Therefore, the above water operational activities are expected to be able to be conducted within the emission estimate provided.

(3) **Maintenance activities** are expected to be similar to those routinely conducted in the basin. If the activities are conducted with controls described in Chapter 8.0, the emissions from these activities also are expected to be covered by the emission estimate provided.

10.2 1995 ANNUAL EMISSIONS

The following are the results of monitoring 105-KE Basin, in calendar year 1995, using the sampling system described in Chapter 9.0. As indicated in Table 10-2, the actual release for all radionuclides is 5.0 E-04 curies.

10.3 PROJECTED EMISSIONS WITHOUT ABATEMENT CONTROLS IN PLACE (POTENTIAL TO EMIT)

A potential to emit is determined by comparing ^{137}Cs radionuclide concentrations in the basin water to radioactive air emissions. As shown in Table 10-2, total emissions in 1995 were 5.0 E-4 curies. In general, water quality during this time averaged about 3 microcuries of ^{137}Cs per liter of water. For the emission estimates listed in Section 10.1, the Table 10-1 projected total emissions are 2.4 E-3 curies. The water quality associated with this estimate is 15 microcuries of ^{137}Cs per liter. The concentration of ^{137}Cs in the water has been previously shown to be related to the level of radioactive air emissions (WHC 1993b).

Table 10-2. Radioactive Air Emissions Measured at 105-KE Basin in Calendar Year 1995.

Radionuclide	Release (curies)
^{60}Co	1.9 E-06
^{90}Sr	5.9 E-06
^{106}Ru	1.1 E-05
^{125}Sb	2.5 E-06
^{134}Cs	4.6 E-07
^{137}Cs	2.4 E-04
^{154}Eu	5.8 E-06
^{155}Eu	1.2 E-06
^{238}Pu	2.3 E-06
$^{239/240}Pu$	1.5 E-05
^{241}Pu	2.1 E-04
^{241}Am	5.6 E-06
Total	5.0 E-04

In 1983 to 1984, a fuel segregation campaign was conducted in 105-KE Basin. This campaign involved handling all fuel in the discharge chute; hence, there are some parallels to the current proposed fuel handling/retrieval activity. Further, there was a minimal water treatment system in operation at that time, consisting of only IX columns. This is comparable to the IXM that is in routine operation for fuel storage today. While air emissions measurements made during 1983 and 1984 were of questionable accuracy in view of the different sampling techniques used then, the water quality was well measured during this period. Water quality data plotted over this 2-year period (1983 to 1984) show that the ^{137}Cs concentration in the water reached levels as high as 23 microcuries per liter. Therefore, the 1983 to 1984 water quality data can be used as a comparison of the effect of performing fuel retrieval with only a minimal water treatment system operating, i.e., without the benefit of abatement controls that will be afforded by the environmental IWTS capability.

If total air emissions are assumed to be proportional to the water quality, i.e., as indicated cesium-137 concentration, then a potential to emit for unabated emissions can be determined as follows:

$$\frac{\text{Change in total air emissions}^2}{\text{Change in cesium-137 concentration}^2} = \frac{(2.4\ E\text{-}3) - (5.0\ E\text{-}4)\ \ Ci}{(15) - (3)\ \mu Ci/L} =$$

1.9 E-3 Ci/12 μCi/L = 1.6 E-4 Ci/μCi/L = Rate of change factor.

For a level of cesium-137 in the water of 23 microcuries per liter, the air emissions can be estimated as:

Total Unabated Air Emissions = Total 1995 Emissions + Rate of Change Factor x Change in cesium-137 Concentration

= 5.0 E-4 Ci + 1.6 E-4 Ci / μCi/L x 23-3 μCi/L

= 5.0 E-4 Ci + 3.2 E-3 Ci = 3.7 E-3 Ci.

Therefore, the potential to emit, or unabated emissions for the fuel removal activity, will be 3.7 E-3 curies. Note that this is a factor of 7.4 times the emissions measured in 1995. Table 10-3 lists the projected emissions by isotope. The emissions were derived by multiplying information from Table 10-2 by a factor of 7.4.

[2] Projected - 1995.

Table 10-3. Projected Unabated Radioactive Air Emissions (Potential to Emit).

Radionuclide	Release (curies)
^{60}Co	1.4 E-05
^{90}Sr	4.4 E-05
^{106}Ru	8.1 E-05
^{125}Sb	1.9 E-05
^{134}Cs	3.4 E-06
^{137}Cs	1.8 E-03
^{154}Eu	4.3 E-05
^{155}Eu	8.9 E-06
^{238}Pu	1.7 E-05
$^{239/240}Pu$	1.1 E-04
^{241}Pu	1.6 E-03
^{241}Am	4.1 E-05
Total	3.7 E-03

The isotopes listed in Table 10-3 account for those that could contribute greater than 10 percent of the potential to emit TEDE to the MEI. This has been demonstrated previously in (DOE/RL 95-65, Table 11-1).

As noted in Section 6.1.3.3, the tanker truck that will transport treated basin water to the 200 Area ETF may constitute a point of emission separate from the KE Basin. An emission estimate is provided in Table 10-4, based on the release of basin water, using a release factor of 1.0 E-04 for the free fall of solutions in static air. Emission estimates in Table 10-4 are extremely conservative for the following reasons.

- The radionuclides in the basin water were assumed to be unchanged from those in Table 7-2. No credit for decontamination provided by the IWTS

- The release was assumed to occur from free falling water into an open or unconfined airspace. No credit is taken for the fact that the water is confined within the tanker truck with only a small (approximately 1 foot) opening to the air.

Table 10-4. Potential to Emit from Excess KE-Basin Water via Tanker Truck to 200 Area Effluent Treatment Facility.

Volume per Truck Load	5,000 gallons
Truck Loads per year	12
Total Annual Volume	60,000 gallons (227,124 liters) or (227,124,000 milliliters)

Isotope	Concentration μCi/ml	Total quantity Ci/yr	Release factor	Unabated release, Ci/yr	CAP 88 dose factors*, mrem/Ci	Unabated dose, mrem/yr
^{241}Am	6.500E-06	1.476E-03	1.000E-04	1.476E-07	1.940E+01	1.864E-06
^{134}Cs	2.050E-06	4.656E-04	1.000E-04	4.656E-08	4.620E-02	2.151E-09
^{137}Cs	3.450E-03	7.836E-03	1.000E-04	7.836E-05	3.530E-02	2.766E-06
^{60}Co	1.060E-06	2.408E-04	1.000E-04	2.408E-08	4.280E-02	1.030E-09
^{152}Eu	3.440E-06	7.813E-04	1.000E-04	7.813E-08	2.270E-02	1.774E-09
^{154}Eu	2.990E-06	6.791E-04	1.000E-04	6.791E-08	2.690E-02	1.827E-09
^{155}Eu	6.620E-06	1.504E-03	1.000E-04	1.504E-07	4.900E-03	7.367E-10
^{238}Pu	1.710E-05	3.884E-03	1.000E-04	3.884E-07	1.180E+01	4.583E-06
$^{239/240}Pu$	2.940E-05	6.677E-03	1.000E-04	6.677E-07	1.280E+01	8.547E-06
^{90}Sr	2.060E-03	4.679E-01	1.000E-04	4.679E-05	6.450E-02	3.018E-06
^{3}H	3.060E-03	6.950E-01	1.000E-04	6.950E-05	3.360E-05	2.335E-09
Total		1.96E+00				2.18E-05

Concentration, μCi/ml: from Table 7-2.
Total quantity in Ci/yr: from total annual volume x 1.0E-06.
Release factor from: (PNL 1981).
* EPA 1990.
μCi/mL = microcuries per milliliter.
Ci/yr = curies per year.
mrem/Ci = millirem per curie.
mrem/yr = millirem per year.

9713541.0780

This page intentionally left blank.

11.0 OFFSITE IMPACT (Requirement 14 and 15)

The total effective dose equivalent for unabated potential emission to the maximally exposed individual using best engineering judgment and emissions data is presented in Table 11-1. The maximally exposed individual is located 6.14 miles west of the 100 Area. The dose conversion factors used were derived from the EPA-approved CAP-88 code (EPA 1990). The projected dose for each individual radionuclide was calculated by multiplying the projected annual emission (Chapter 10.0, Table 10-3) by the dose conversion factor. The resulting dose is 2.8 E-03 millirem.

The total effective dose equivalent to the maximally exposed individual using good engineering judgment of projected abated emissions is presented in Table 11-2. The maximally exposed individual is located 6.14 miles west of the 100 Area. The dose conversion factors used were derived from the CAP-88 code. The projected dose for each individual radionuclide is calculated by multiplying the projected annual emission from Table 10-1 by the dose conversion factor. The resulting dose is 1.3 E-03 millirem.

Table 11-1. Total Effective Dose Equivalent to the Maximally Exposed Individual Using Projected Emissions Based on Best Engineering Judgment and Emissions Data for the Unabated Emissions.

Radionuclide	Actual emissions (Ci/yr)	CAP-88 Dose conversion factor, mrem/Ci	TEDE to the MEI, mrem/yr	Dose[a] (percent of total)
^{60}Co	1.4 E-05	4.28 E-02	6.02 E-07	<1.0
^{90}Sr	4.4 E-05	6.45 E-02	2.82 E-06	<1.0
^{106}Ru	8.1 E-05	3.08 E-02	2.51 E-06	<1.0
^{125}Sb	1.9 E-05	6.13 E-03	1.13 E-07	<1.0
^{134}Cs	3.4 E-06	4.62 E-02	1.57 E-07	<1.0
^{137}Cs	1.8 E-03	3.53 E-02	6.27 E-05	2.2
^{154}Eu	4.3 E-05	2.69 E-02	1.15 E-06	<1.0
^{155}Eu	8.9 E-06	4.90 E-03	2.42 E-08	<1.0
^{238}Pu	1.7 E-05	1.18 E+01	2.01 E-04	7.1
$^{239/240}Pu$[b]	1.1 E-04	1.28 E+01	1.42 E-03	50.5
^{241}Pu[b]	1.6 E-03	2.03 E-01	3.15 E-04	11.2
^{241}Am[b]	4.1 E-05	1.94 E+01	8.04 E-04	28.6
Total	3.7 E-03		2.81 E-03	100.0

[a] Column might not add up to 100% due to rounding off.
[b] Radionuclides that could contribute greater than 10% of the potential to emit.

Ci/yr = curie per year.
MEI = maximally exposed individual.
mrem/Ci = millirem per curie.
mrem/yr = millirem per year.
TEDE = total effective dose equivalent.

Table 11-2. Total Effective Dose Equivalent to the Maximally Exposed Individual Using CAP-88 Dose Conversion Factors for Good Engineering Judgment of Abated Emissions.

Radionuclide	Projected emissions (Ci/yr)	CAP-88 Dose conversion factor, mrem/Ci	TEDE to the MEI, mrem/yr	Dose*, percent of total
^{60}Co	1.2 E-05	4.28 E-02	5.3 E-07	<1
^{90}Sr	6.2 E-04	6.45 E-02	4.0 E-05	3.1
^{106}Ru	2.7 E-05	3.08 E-02	8.3 E-07	<1
^{137}Cs	5.3 E-04	3.53 E-02	1.9 E-05	1.5
^{238}Pu	5.7 E-06	1.18 E+01	6.7 E-05	5.3
$^{239/240}Pu^{b}$	3.4 E-05	1.28 E+01	4.4 E-04	35.0
$^{241}Pu^{b}$	1.2 E-03	2.03 E-01	2.3 E-04	18.5
$^{241}Am^{b}$	2.4 E-05	1.94 E+01	4.6 E-04	36.6
Total	2.4 E-03		1.3 E-03	100

* Column might not add up to 100% due to rounding off.

Ci/yr = curie per year.
MEI = maximally exposed individual.
mrem/Ci = millirem per curie.
mrem/yr = millirem per year.
TEDE = total effective dose equivalent.

12.0 FACILITY LIFETIME (Requirement 17)

The construction activities described in this NOC are scheduled to begin in calendar year 1997. Fuel elements will begin to be retrieved during calendar year 1998 and removal will be completed within a 2-year period. Sludge removal will be conducted later and will be covered by a subsequent NOC. The date for basin deactivation has not been established and depends on milestones established in the *Hanford Federal Facility Agreement and Consent Order* (Tri-Party Agreement) (Ecology et al. 1996).

This page intentionally left blank.

9713641.0786

13.0 TECHNOLOGY STANDARDS (Requirement 18)

Modifications to emission control process equipment (water treatment) are proposed. The IWTS will be designed and constructed to meet ANSI/ANS-57.7, Section 6.3, except that 10 CFR 50 is not applicable.

During the other activities described in this NOC, good engineering practices will be employed to reduce airborne emissions. General design criteria, based on "National Consensus" codes and standards as well as pertinent state and local codes and standards, will be used.

This page intentionally left blank.

14.0 REFERENCES

ANS, 1988, *"Design Criteria for an Independent Spent Fuel Storage Installation (Water Pool Type)"*, ANS 57-7-1988, American Nuclear Society, LaGrange, Illinois.

DOE/RL-93-13, *Notice of Construction for the 105-KE Encapsulation*, U.S. Department of Energy, Richland Operations Office, Richland, Washington.

DOE/RL-95-65, *Radioactive Air Emissions Notice Of Construction, Debris Removal, 105 KE-Basin*, U.S. Department of Energy, Richland Operations Office, Richland, Washington.

DOE/RL-96-37, *Radionuclide Air Emissions Report for the Hanford Site Calendar Year 1995*, U.S. Department of Energy, Richland Operations Office, Richland, Washington.

DOE/RL-96-76, *U.S. Environmental Protection Agency Clean Air Act Notice of Construction for Spent Nuclear Fuel Project--Hot Conditioning System Annex*, Project W-484, U.S. Department of Energy, Richland Operations Office, Richland, Washington.

DOE/RL, 1996, *105 K East (KE) Basin Radioactive Air Emission Limit Exceedence*, Correspondence number 96-SFD-090, James E. Rasmussen to A.W. Conklin, Washington State Department of Health, March 27, 1996

DOH, 1993, letter from A.W. Conklin, Washington State Department of Health, to J.D. Bauer, U.S. Department of Energy, Richland Field Office, September 13, 1993, AIR 93-908.

Ecology, EPA, and DOE-RL, 1996, *Hanford Federal Facility Agreement and Consent Order*, Washington State Department of Ecology, U.S. Environmental Protection Agency, U.S. Department of Energy, Richland Operations Office, Olympia, Washington, amended periodically.

EPA, 1990, *The Clean Air Act Assessment Package - 1988 (CAP-88), A Dose and Risk Assessment Methodology for Radionuclide Emissions to Air*, Vols. 1-3, U.S. Environmental Protection Agency, Washington, D.C.

PNL, 1981, *Aerosols Generated by Free Fall Spills of Powders and Solutions in Static Air*, PNL-3786, Pacific Northwest Laboratory, Richland, Washington

WHC, 1993a, *BARCT Assessment for 105-KE Encapsulation Activity*, WHC-SD-NR-TI-052, Westinghouse Hanford Company, Richland, Washington.

WHC, 1993b, *Transport Mechanism of Radionuclides in 105-KE Fuel Storage Basin to Airborne Effluent Release*, WHC-SD-NR-ES-016, April 1993, Westinghouse Hanford Company, Richland, Washington.

WHC, 1993c, *Test Report - 100K Basin Air Flow Effluent Volume Test*, WHC-SD-NR-TRP-015, Westinghouse Hanford Company, Richland, Washington.

WHC, 1995a, *105-K Basin Material Design Basis Feed Description for Spent Nuclear Fuel Project Facilities*, WHC-SD-SNF-TI-009, Rev. 0A (Values have been adjusted to reflect decay from 1-1-95 through 12-31-97: W.L. Willis, Numatec Hanford Corporation to L.D. Kamberg, Rust Federal Services Hanford Inc., internal correspondence dated January 28, 1997).

WHC, 1995b, *The K-Basin Corrosion Program Report*, WHC-EP-0877, Rev. 0, September 1995, Westinghouse Hanford Company, Richland, Washington.

WHC, 1996a, *SARP (Safety Analysis Report Packaging) for the MCO Transport*, WHC-SD-TP-SARP-017, Draft, Rev. 0, Westinghouse Hanford Company, Richland, Washington.

WHC, 1996b, *Functional Design Criteria for the K-Basin Sludge Removal System*, WHC-SD-SNF-FDC-004, October 1996, Westinghouse Hanford Company, Richland, Washington.

APPENDIX A

DISCUSSION OF AS LOW AS REASONABLY ACHIEVABLE CONTROL TECHNOLOGY

As stated in WAC 246-247-040(4), "All existing emission units and nonsignificant modifications shall utilize ALARACT..." By definition, the proposed modification is "nonsignificant". As stated in WAC 246-247-030(6), in part, "Control technology that meets BARCT requirements also meets ALARACT requirements."

A BARCT assessment (WHC 1993a) was prepared for the 105-KE Basin encapsulation activity. The BARCT assessment studied the economic impacts of installing several HEPA filtration systems in the 105-KE Basin. The BARCT assessment revealed that installing HEPA filtration on the 105-KE Basin was not cost effective.

In a September 13, 1993 letter to U.S. Department of Energy, Richland Operations Office, the Washington State Department of Health agreed (subject to specific conditions) that the water in the K-Basins would be accepted as BARCT for the control of airborne radionuclides (DOH 1993).

Therefore, it is concluded that the IWTS, described in Section 6.1.3, is ALARACT for the proposed activity.

This page intentionally left blank.

DISTRIBUTION

OFFSITE

A. W. Conklin, Head
Air Emissions and Defense Waste Section
Division of Radiation Protection
State of Washington Department of Health
Airdustrial Park Building 5, LE-13
Olympia, Washington 98504-0095

S. E. Mckinney
Hanford Project Manager
Washington State Department of Ecology
P. O. Box 47600
Olympia, Washington 98504-7600

S. M. Alexander
Perimeter Section
Washington State Department of Ecology
1315 West Fourth Avenue
Kennewick, Washington 99336-6018

A. J. Frankel, Acting Director
Air and Toxics Division
U.S. Environmental Protection Agency
Region 10
Mail Stop AT-082
1200 Sixth Avenue
Seattle, Washington 98101

J. Wilkinson
Confederated Tribes of the Umatilla
Indian Reservation
P. O. Box 638
Pendleton, Oregon 97801

D. Powaukee
Nez Perce Tribe
P. O. Box 305
Lapwai, Idaho 80540

R. Jim, Manager
Environmental Restoration/
Waste Management Program
Confederated Tribes and Bands
of the Yakama Nation
P. O. Box 151
Toppenish, Washington 98948

DISTRIBUTION (cont)

ONSITE		MSIN
	U.S. Department of Energy	
	Richland Operations Office	
	C. A. Ayoub (4)	S7-41
	G. M. Bell	A4-52
	R. G. Holt	S7-41
	P. G. Loscoe	S7-41
	J. E. Rasmussen	A5-15
	H. M. Rodriguez (7)	A5-15
	E. E. Sellers	S7-41
	G. D. Trenchard	S7-41
	Reading Room (2)	H2-53
	Duke Engineering & Services Hanford, Inc.	
	K. E. Ard	X3-85
	D. C. Best	R3-56
	B. S. Carlisle	R3-85
	A. S. Daughtridge	R3-85
	C. DeFigh-Price	X3-79
	R. G. Gant	X3-79
	M. W. Gmyrek	X3-71
	F. G. Hudson	R3-11
	P. G. LeRoy	R3-11
	R. J. Lodwick	X3-78
	J. P. Matthews	B4-08
	C. C. Pitkoff	X3-85
	R. W. Rasmussen	R3-86
	D. W. Siddoway	X3-71
	J. A. Swenson	R3-11
	D. S. Takasumi	X3-85
	C. A. Thompson	R3-85
	D. J. Watson (3)	X3-79
	M. J. Wiemers	X3-85
	PGL File/LB	R3-11
	SNF Project Files	R3-11
	Fluor Daniel Hanford, Inc.	
	J. A. Bates	H6-36
	J. D. Davis	H5-20
	E. W. Gerber	R3-11
	J. L. Jacobson	B3-70
	K. A. Peterson	H6-36
	L. K. Trent	H8-67
	N. H. Williams	R3-11
	B. D. Williamson	B3-15

ONSITE

DISTRIBUTION (cont)

	MSIN
Fluor Daniel Northwest, Inc.	
F. W. Bradshaw	R3-85
Hanford Technical Library	K1-11
Lockheed Martin Services, Inc.	
Central Files	A3-88
DPC	A3-94
EDMC (2)	H6-08
Numatec Hanford Corporation	
P. M. Bourlard	R3-86
J. E. Filip	R3-85
J. J. Irwin	HO-34
W. W. Willis	R3-86
Rust Federal Services of Hanford, Inc.	
E. M. Greager	H6-36
L. D. Kamberg	H6-26
J. J. Luke	H6-25
Air Operating Permit File	H6-25

This page intentionally left blank.