9513346.0918
START
0039252
17

BHI-OP-00017
Rev. 00

Startup and Operating Procedure for Pilot-Scale Soil Washington/Treatability Tests at Hanford 100-DR-1 Area

Author
E. A. Nelson, CH2M Hill, Inc.
J. R. Hoyle, CH2M Hill, Inc.

Date Published
November 1994

Environmental Excellence
HANFORD

Prepared for the U.S. Department of Energy
Office of Environmental Restoration and
Waste Management

Bechtel Hanford, Inc.
Richland, Washington

NOV 1994
RECEIVED
EDMC

Approved for Public Release

1.0 SITE FACILITIES 1
1.1 INTRODUCTION 1
1.2 SCOPE 1
1.3 CONTAINMENT ENCLOSURES 1
1.4 ELECTRICAL POWER 2
1.5 WATER 3
1.6 COMPRESSED AIR 3

2.0 PRESTARTUP CHECKS 4
2.1 SAFETY 4
2.2 LUBRICATION 4
2.3 ELECTRICAL 4
2.3.1 Grounding 4
2.3.2 Electrical Control Center Energization 4
2.3.3 Water and Equipment 5
2.3.4 Piping and Hoses 5
2.3.5 Clarifiers 6
2.3.6 Attrition Scrubbers 6
2.3.7 Spiral Classifiers 6
2.3.8 Rotary Drum Filters 7
2.4 FINAL INSPECTIONS 7
2.4.1 Safety 7
2.4.2 Equipment 7

3.0 PLANT STARTUP 8
3.1 ENERGIZE ELECTRICAL CIRCUITS 8
3.2 FIRST STAGE CLASSIFIER CIRCUIT 9
3.3 ATTRITION SCRUBBING CIRCUITS 10
3.4 WATER CIRCUITS OPERATION 11

4.0 FIELD PRETEST 12
4.1 SYSTEM RESTART WITH SOIL 12
4.2 SYSTEM OPERATIONAL GUIDANCE 13
4.2.1 Liquid Polymer System 13
4.2.2 Soil Feed Rate 14
4.2.3 Water Tank Levels 15
4.2.4 Organic Material 15
4.2.5 Screw Classifiers – General 16
4.2.6 Primary Spiral Classifier 16
4.2.7 Secondary Spiral Classifier 16
4.2.8 Attrition Scrubbers 16

NOV 1994
RECEIVED
EDMC

9513346.0919

Controlled Copy No. 9

BHI-OP-00017
REV: 00
OU: 100-DR-1
TSD: N/A
ERA: N/A

APPROVAL PAGE

Title of Document: STARTUP AND OPERATING PROCEDURE FOR PILOT-SCALE SOIL WASHING/TREATABILITY TESTS AT HANFORD 100-DR-1 AREA

Author(s): E. A. Nelson, CH2M Hill, Inc.
J. R. Hoyle, CH2M Hill, Inc.

Approval: T. F. Demmitt, Responsible Manager, Bechtel Hanford, Inc.

Signature _____ Date 11/18/94

The approval signature on this page indicates that this document has been authorized for information release to the public through appropriate channels. No other forms or signatures are required to document this information release.

In some cases, for documents in process or previously issued with a WHC document number before July 1, 1994, this page will appear in documents identified with WHC document numbers. No other forms are required for these documents.

BHI-PC DM 11-18-94

TOTAL PAGES: ____

BHI-DC-010 (10/94)

THIS PAGE INTENTIONALLY
LEFT BLANK

CONTENTS (Continued)

5.0 PLANT SHUTDOWN PROCEDURES 17
5.1 SHUTDOWN WITH ONLY WATER IN THE SYSTEM 17
5.2 SHUTDOWN WITH WATER AND SOIL IN THE SYSTEM 18
5.3 EMERGENCY SHUTDOWN 21

6.0 REFERENCES 21

APPENDIX
A PROCESS AND INSTRUMENTATION DIAGRAM A-1
EQUIPMENT LAYOUT AND HOSE ROUTING A-2

Metric Conversion Chart

The following conversion chart is provided to the reader as a tool to aid in conversion.

Into Metric Units

If You Know	*Multiply By*	*To Get*
Length		
inches	25.4	millimeters
inches	2.54	centimeters
feet	0.305	meters
yards	0.914	meters
miles	1.609	kilometers
Area		
sq. inches	6.452	sq. centimeters
sq. feet	0.093	sq. meters
sq. yards	.0836	sq. meters
sq. miles	2.6	sq. kilometers
acres	0.405	hectares
Mass (weight)		
ounces	28.35	grams
pounds	0.454	kilograms
ton	0.907	metric ton
Volume		
teaspoons	5	milliliters
tablespoons	15	milliliters
fluid ounces	30	milliliters
cups	0.24	liters
pints	0.47	liters
quarts	0.95	liters
gallons	3.8	liters
cubic feet	0.028	cubic meters
cubic yards	0.765	cubic meters
Temperature		
Fahrenheit	subtract 32, then multiply by 5/9	Celsius

Out of Metric Units

If You Know	*Multiply By*	*To Get*
Length		
millimeters	0.039	inches
centimeters	0.394	inches
meters	3.281	feet
meters	1.094	yards
kilometers	0.621	miles
Area		
sq. centimeters	0.155	sq. inches
sq. meters	10.76	sq. feet
sq. meters	1.196	sq. yards
sq. kilometers	0.4	sq. miles
hectares	2.47	acres
Mass (weight)		
grams	0.035	ounces
kilograms	2.205	pounds
metric ton	1.102	ton
Volume		
milliliters	0.033	fluid ounces
liters	2.1	pints
liters	1.057	quarts
liters	0.264	gallons
cubic meters	35.315	cubic feet
cubic meters	1.308	cubic yards
Temperature		
Celsius	multiply by 9/5, then add 32	Fahrenheit

1.0 SITE FACILITIES

1.1 INTRODUCTION

The 100-DR-1 soil washing test facility has been assembled to scale up laboratory test results for removing radioactive contaminants from 100 Area trenches. The system consists of commercially available materials handling and water clarification equipment sized to accommodate processing material less than 150 mm in diameter at a rate of up to 10 tons/hr. Although the laboratory tests included the use of an electrolyte solution and the system has been configured to have the same capability, only water will be used for current field testing.

1.2 SCOPE

This document contains only instructions for equipment startup, operations, and shutdown. Operation of the radiation monitoring system will be conducted by Pacific Northwest Laboratory. For other requirements and procedures related to facility operations consult:

- **Radiation Work Permit**: Description of radiological hazards that may be present and protective measures to be taken.
- **Site Specific Health and Safety Plan**: Description of nonradiological hazards present and proper protective measures to be taken.
- **Lock and Tag Log**: Details of isolating components for maintenance.
- **Excavation Plan/Permit**: Details of providing soil to the soil washing facility.
- **Field Test Procedure**: Details of collecting test information. The Field Test Procedures includes the Waste Control Plan, the Quality Assurance Project Plan, and the Sampling and Analysis Plan.
- **Job Hazard Analysis**: Precautions concerned with equipment operation.
- **Component Technical Manuals**: Detailed maintenance instructions.
- **Conduct of Operations Matrix**: Overall operations information.

Because the soil washing facility is used for testing, each day's operation will begin with a briefing ("tail-gate" meeting) by the Field Coordinator to review safety information, modify system operating parameters and/or configuration, review test results to date, and outline the day's major activities.

1.3 CONTAINMENT ENCLOSURES

Containment enclosures are provided to contain water spillage from the soil washing plant equipment. The enclosures are formed by 30 mL polyvinyl chloride (PVC) sheeting draped over 12-in. PVC pipe and provide a method for holding plant spillage until such time that it can be recycled or disposed of.

A portable air operated diaphragm pump or small electrical sump pump will be used to transfer water spillage to a separate tank for disposal or to the system for recycling. The recycle method is preferable because the washing plant equipment will remove any entrained solids and provide a clarified effluent stream. The enclosures will be covered by heated tents to provide weather protection.

1.4 ELECTRICAL POWER

The service requirement for the plant is 480V, 3-phase, 60 Hz, 600 amp. The service will be supplied initially with a portable diesel generator rated for 400 kW at 480V and at a later date may be converted to site utility power. The utility power conversion would consist of overhead 13.8-kV distribution to a plant 500-kVA pad mounted transformer, that converts the 13.8 kV to the 480V service level. The transformer 480V secondary cabling (parallel 500 m___ c___ m___ cable groups) is then routed underground in dual 4-in. rigid galvanized steel conduits to a metering enclosure containing the instruments (CT and PT transformers) used to measure the power consumption. The meter enclosure is mounted on the outside wall of a conex enclosure designed to serve as an electrical control center for the plant.

Distribution of the 480V service to the plant equipment is accomplished through three 480V, 3-phase distribution panelboards located in the conex enclosure electrical control center. The three 480V panelboards (PPA, PPB, and PPC) provide isolation and protection for all 480V power distributed to the plant electrical equipment.

Supply and distribution of the 120V service to the plant equipment is accomplished using a 50-kVA floor mounted, dry-type transformer located in the electrical control center that converts a 480V feeder from PPC to a 208/120V, 3-phase, 60-Hz service level distributed through two 208/120V, 3-phase distribution panelboards also located in the electrical control center for the plant. The two 208/120V panelboards (LPA and LPB) provide isolation and protection for all 208/120V power distributed to the plant electrical equipment lighting instrument and receptacles.

Points of isolation for electrical power sources:

- 13.8-kV fused disconnect switches at future utility line tap
- 13.8-kV fused bayonet switches at 500-kVA transformer
- 480V main 700A circuit breaker at portable generator
- 480V main 400A circuit breaker for PPA
- 480V main 600A circuit breaker for PPB
- 480V main 400A circuit breaker for PPC
- 120V main 225A circuit breaker for LPA
- 120V main 225A circuit breaker for LPB.

Distribution of the power from the electrical control center panelboards to terminal boxes, located in the environmental tents (A, B, and C) enclosing the process equipment, is accomplished using type-THHN/THWN building wire routed in intermediate metal conduits. The wire is terminated at the panelboards and terminal boxes using compression-type mechanical terminals.

Distribution of power from the tent terminal boxes to the individual pieces of equipment is done using individual type G or SO round, portable power cables. The flexible cables allow for easy

replacement and positioning adjustment of the individual equipment skids without rework of conduit systems. The cables are terminated at the equipment control panels and terminal boxes using compression type mechanical terminals. Cord connectors provide strain relief and seal out dust and water at the point of cable entry to the electrical boxes.

The flexible cables routed inside the tents must be protected from physical damage. Use of walk-way covers, short conduit sections, and supporting the cables in bundles several points along the cable routes is acceptable. Use of long lengths of raceway for flexible cable protection is not permitted.

Each equipment skid or single piece of electrical equipment is provided with an electrical disconnect or isolation means. All motor starters and controls are locally mounted on or near the energized equipment. No control automation functions are provided in the electrical control center at this time, but space is provided for future installation if desired.

A simple static ground grid is provided between tent A and tents B and C. A loop ground grid will be provided for the permanent power transformer. Ground grid connections will be provided for the panelboard grounding. Two ground grid connections will be provided for the portable generator. All ground grid components shall be electrically continuous. Each metal structure will be statically grounded. Metal structures with energized electrical equipment will have both a static ground and an electrical ground supplied from the power source.

All electrical work shall conform to the requirements of the National Electrical Code. Following installation all circuits shall be verified for proper connection and wire continuity.

1.5 WATER

Process water for the plant will come from two mobile fractionation tanks (TK-101 and TK-102) that are capable of holding about 18,000 gal each. Initially tank TK-101 will be filled with about 15,000 gal and tank TK-102 will be filled with about 5,000 gal of potable grade water trucked to the site. This water will be cascaded through the plant during equipment startup and testing. Additional water will be supplied to tanks TK-101 and TK-102 as needed to maintain adequate submergence for their transfer pumps (P-104 and P-109).

1.6 COMPRESSED AIR

Compressed air for plant operation is provided by a portable air compressor. The compressed air will be used for blowing out lines, sparging connections (to keep solids in suspension) or for the diaphragm pumps, as required.

2.0 PRESTARTUP CHECKS

2.1 SAFETY

During initial startup all equipment will have to be observed closely to ensure damage was not incurred during transportation and installation. If necessary, machinery guards may be temporarily removed to establish that the equipment is operating properly. **MACHINERY GUARDS MUST BE IN PLACE FOR NORMAL PLANT OPERATION**. Because of the test nature of the facility, maximum use has been made of temporary connections via hoses and electrical cabling. These items will present potential tripping hazards in areas where ramps and covers are not provided. For equipment having ladder access, ensure that ladders, platforms, and handrails are securely fastened before use.

2.2 LUBRICATION

Equipment and components having grease fittings have been lubricated at the factory and require only periodic lubrication in the field. Oil filled gearboxes should be checked for proper level before initial startup and daily, during operating periods. The technical manual should be consulted for proper lubricant types and frequency of change/addition.

2.3 ELECTRICAL

2.3.1 Grounding

1. Before energizing the plant electrical system a qualified electrician shall ensure that the ground circuits are connected for the distribution panelboards PPA, PPB, PPC, LPA, and LPB.

2. Before energizing plant electrical equipment a qualified electrician shall ensure that the ground circuits, static and power, are connected for the piece of equipment. Grounding conductors shall be checked to ensure continuity of the ground system.

   WARNING: Improper grounding can result in serious physical injury or death of person coming in contact with that equipment.

2.3.2 Electrical Control Center Energization

1. Verify that all equipment controllers and all disconnect switches for standalone motor starters are in the off or disconnected state.

2. Before energizing the plant incoming power from either the portable generator or the permanent utility sources, ensure that the main circuit breakers for panelboards PPA, PPB, PPC, LPA, LPB, and all branch breakers are in the "off" position.

3. For startup using the portable generator, verify that the generator main circuit breaker is in the "off" position. Start the generator and verify the voltage indicator reads 480V and amperage indicator reads 0-A.

4. For startup using the permanent utility source verify that the 13.8-kV utility fused disconnects are in the open position and the pole ground wires appear properly connected.

5. Place the generator breaker in the "on" position.

6. Place the main breakers in panels PPA, PPB, PPC, LPA, and LPB in the "on" position.

7. Place the feeder breakers for the transformers TZ in the "on" position and energize the transformer.

8. Open all breakers ("off" position) and shutdown the generator until ready to commence the plant startup sequence.

2.3.3 Water and Equipment

Process water will be supplied to the site via tanker truck. At the site the water will be placed into storage tanks (TK-101 and TK-102) before being pumped into the system for filling and operation.

1. Check that the drain valves (located under the tanks near the wheels) are shut.

2. Check that the sight gage connection valve is open (the transfer pumps [P-104 and P-109] suction valves should remain closed until ready to start the pumps).

3. Fill tank TK-101 to about 15,000 gal and tank TK-102 to about 5,000 gal.

   NOTE: Once the levels are higher than 5,000 gal in each tank, system filling can be started.

2.3.4 Piping and Hoses

As noted earlier maximum use will be made of hoses to route fluid streams instead of "hard" piping throughout. The hoses will allow for movement between components and provide for easy drainage to prevent freezing.

1. Shut the drain/sample valves on all components and piping.

2. Check that all hoses are routed in accordance with the piping and instrumentation diagram (100-PE-7FA-M001)/layout (100-PE-7FA-M002) drawings and that all cam-lock fittings are securely fastened.

3. Shut spray and dilution control valves for:

   - First stage spiral classifier (PK-101)
   - Second stage spiral classifier (PK-111)
   - First stage attrition scrubber (PK-105)
   - Intensive rinse (drying) screen (PK-110)

4. Partially open (about 1/4 to 1/2 of full open position) sprays and dilution control valves for:

   - Multideck screen (SC-102)
   - Second Stage Attrition Scrubber (PK-106)

5. Shut the underflow butterfly control valves for each clarifier (PK-102 and PK-107).

6. Open the normal clarifier overflow (effluent) butterfly control valves located at tanks TK-101 and TK-102.

2.3.5 Clarifiers

The purpose of the clarifiers is to remove fine sediments/particles from the water stream so that the water may be recycled through the storage tanks (TK-101 and TK-102). A flocculent and polymer are added in the flocculating tank that causes the small particles to agglomerate. The resulting floc is separated by gravity in the clarifier tank before being routed to the rotary drum filters.

The clarifiers will be erected in accordance with the technical manual and the manufacturer's representative. Before initial startup, ensure the connection between each flocculator and clarifier vessel is secure. Ensure that the effluent and emergency overflow openings are not obstructed. Check that the flocculator agitator and mixer turn freely by hand.

2.3.6 Attrition Scrubbers

The attrition scrubbers are used to mechanically remove contamination from the incoming soil slurry by agitating it with counter-rotating paddles.

1. Check that the inlet and outlet openings are free of obstructions.

2. Check that the second stage attrition scrubber overflow tank (TK-105) is ready to receive liquid.

2.3.7 Spiral Classifiers

The spiral classifiers separate particles less than 2 mm in diameter. Adjustments to overflow particle size are accomplished by dilution water and weir height adjustments.

1. Ensure that the overflow tanks (TK-103 and TK-106) are in place and ready to receive liquid.

2. Check for foreign objects in the spirals. Raise and lower the spirals using the hand cranks to ensure they do not interfere with the tank end.

2.3.8 Rotary Drum Filters

The rotary drum filters are designed to dewater and filter the contaminated soil slurry produced by the wash system. The filter assembly consists of the rotating drum/agitator, vacuum pump, blower, filtrate pump and air/water separating vessels.

1. Check to ensure the overflow tanks (TK-10 and TK-20) are in place and ready to receive liquid.

2. Shut all valves in the seal water supply lines.

3. Shut the vacuum pot drain valves.

4. Check around the drum and agitator to ensure there are no foreign objects.

   NOTE: The screen material should be installed in accordance with the manufacturer's instructions. Ensure there are no rips or tears. The scraper bar should also be preadjusted in accordance with the technical manual. Ensure it is not contacting the screen.

5. Check that the seal water drain tank (TK-104), is ready to receive liquid. A sight tube (tygon) should be installed on the tank drain to provide visual level indication.

   NOTE: For initial plant startup, vacuum pump seal water discharge will be routed to tank TK-107 until it is determined that it may be directed to tank TK-104 without causing vacuum pump operating problems.

2.4 FINAL INSPECTIONS

2.4.1 Safety

1. Check that fire extinguishers, first aid kits, and eye wash/showers are in place.

2. Ensure all personnel entering the equipment enclosures are aware of the hazards and are wearing appropriate protective equipment.

2.4.2 Equipment

1. Ensure all electrical cabinets are closed.

2. Remove any obstructions from motor ventilation openings.

3. Ensure all pump shafts, belts and agitators are free of obstructions.

3.0 PLANT STARTUP

During initial plant startup water will be cascaded through the components to check operation and determine control settings before admitting soil. Because the system does not contain any automatic control valves, operators will be required to make many minor changes before gaining equilibrium. If abnormal leakage or a break occurs, shutdown the system and make repairs before continuing. The electrical system will be checked up to the local starter of each piece of equipment as part of the construction turnover process.

3.1 ENERGIZE ELECTRICAL CIRCUITS

1. Start generator and verify the voltage on the load side of the breaker (read the meters).

2. Close the generator breaker.

3. Measure the voltage at the line side of the 480V main breakers (PPA, PPB, and PPC).

4. Close main breaker PPA and measure the voltage on the load side.

5. Close main breaker PPB and measure the voltage on the load side.

6. Close main breaker PPC and measure the voltage on the load side.

7. Close the 80 amp TZ feeder in panel PPC and energize the transformer.

8. Measure the voltage at the line side of the 208V main breaker in panel LPA.

9. Close the main breaker in LPA and close the 100 amp branch breaker feeding panel LPB.

10. Measure the voltage at the line side of the 208 volt main breaker in LPB.

11. Close the main breaker in LPB.

12 Close the branch circuit breakers feeding individual pieces of equipment as required to support equipment operation.

NOTE: At any time after electrical power is available, the belt conveyors can be started to check belt tracking and weight scale operation. The conveyor will need

several hours of operation to adjust for normal belt stretching. The attrition scrubber may also be started (without water) to check operation and determine characteristic noises.

3.2 FIRST STAGE CLASSIFIER CIRCUIT

NOTE: Ensure all valves are in the proper position as detailed in Section 2.3.3.

1. Open pump P-104 suction valve, start the pump and immediately open the discharge valve to allow the lines to fill and initiate flow from the multideck screen sprays.

   CAUTION: None of the centrifugal pumps in the soil wash system are equipped with recirculation lines to remove pump added heat. Do not allow the pumps to run at shutoff conditions (no flow), otherwise pump damage will result.

2. Adjust the multideck screen spray nozzle control valve as desired. Water will fill the first stage classifier tank and overflow into tank TK-103.

3. As the level in tank TK-103 rises above the clarifier feed pump (P-101) suction pipe, start the pump and crack open the discharge valve to avoid drawing the level in T-103 below the suction line. Open the classifier (PK-101) spray control valve, and adjust pump (P-101) discharge valve to control suction level.

   CAUTION: Always ensure the Galigher pump suctions remain flooded during operation.

4. After the flocculator fills and water is above the top sample tap in the clarifier conical section startup of the large rotary filter can begin. The system can run indefinitely without the rotating drum filter, as noted above, until the operators are comfortable with system operation. The clarifier will continue to fill until it overflows into tank TK-101.

   NOTE: For initial testing, air operated diaphragm pumps (P-103 and P-108) will not be used to transport the clarifier underflows to the rotary filters. Flow will be controlled by a butterfly valve located below the clarifier cone section. Normal flow adjustments can't be made until clarified water reaches the normal overflow opening.

5. Startup the rotary filter as follows:

   - Ensure pump (P-110) discharge valve is open and the pump is aligned for automatic operation.

   - Start the agitator.

     NOTE: During normal operation, the agitator must be operated whenever slurry is in the tank. If the filter is to be off for more than a few minutes, drain the slurry below the filter level and clean the filter.

- Open the seal water supply valves to the vacuum pump and filtrate pump stuffing box.

- Close the valve that controls the vacuum to the upper position of the drum.

- Start the blower.

- Start the filter drive.

- Adjust the clarifier butterfly valve to admit flow to the filter tank.

- Start the filtrate pump and the vacuum pump.

  NOTE: Adjust the flow regulating valve such that there is neither a vacuum or pressure registered on the seal supply compound gauge. When the vacuum pump starts, seal water will begin to flow into tank TK-104. If the level rises excessively the pump P-110 may be started manually. The pump discharge valve may be regulated to maintain a constant level, but will require periodic adjustment as flow rates change.

6. Water is now flowing around the first stage classifier circuit. Flow rates should be varied to gain experience on system operating characteristics. Monitor tank levels and adjust flow rates to prevent overflow or loss of pump suction.

3.3 ATTRITION SCRUBBING CIRCUITS

NOTE: If not already performed, the attrition scrubbers should be run dry to check operation and determine characteristic noises.

1. Open pump P-109 suction valve at tank TK-102, start the pump and immediately open the discharge valve to fill the line and start filling the second stage attrition scrubber (PK-106).

2. After the second stage attrition scrubber is full, it will overflow to tank TK-105. When the level in tank TK-105 is above pump P-105 suction, start the pump and immediately adjust flow to the dewatering (drying) screen (PK-110).

3. Water will flow through the dewatering screen into tank TK-107. When the level in tank TK-107 is above pump P-117 suction, start the pump and immediately adjust flow to fill the first stage attrition scrubber (PK-105).

4. After the first stage attrition scrubber is full, it will overflow to the second spiral classifier (PK-111). The second spiral classifier overflows to tank TK-106.

5. When the level in tank TK-106 is above pump P-106 suction, start the pump and immediately open the discharge valve to start flow to the solution clarifier (PK-107) flash tank (flocculator).

6. Open the spiral classifier (PK-111) spray control valves to increase the rate of filling of the solution clarifier (PK-107). Adjust pump P-106 discharge valve as necessary.

7. Initiate flow to the dewatering screen sprays.

   - Open the dewatering screen spray from pump P-109 and adjust flows as required.

   - Open the dewatering screen spray from pump P-104 and adjust flows as required.

8. As the solution clarifier fills, check that the normal overflow (effluent) to tank TK-102 is aligned for operation. The butterfly valve at tank TK-102 must be open.

9. Operation with the solution clarifier may continue indefinitely (without the small rotary drum filter operating) until operators have gained confidence in system operation. When ready, start the small rotary drum filter as outlined for the large rotary drum filter in Section 3.2, step 5.

3.4 WATER CIRCUITS OPERATION

As the water circuits operate and experience is gained at controlling flows/levels, remaining system equipment should be checked out before introducing soil.

NOTE: With the water circuit operating in equilibrium and all other plant equipment running (conveyors, scrubbers, and screen shakers) a total plant "no load" power/current reading should be taken.

1. The classifier spirals should be started and checked. When operation is determined to be satisfactory, the spirals may be stopped until ready to feed soil.

2. Fill the flocculent and polymer tanks with water/chemicals in accordance with field instructions. The metering pumps should be started to prime them and check operation. After checkout the metering pumps may be stopped until ready to add soil to the system.

3. The motors on the multideck and dewatering screens should be started to check for proper vibratory movement. After checkout the screens' motors may be stopped until ready to add soil to the system.

4. Run all conveyors again to check for proper operation.

5. Run the attrition scrubbers to check out wet operation.

4.0 FIELD PRETEST

The goal of the field pretest is to ensure that the soil washing system and equipment are functioning properly so that the requirements and objectives of the treatability field tests can be met. Any necessary equipment modification or process reconfiguration will be made during this test. The field pretest is an opportunity for the operators to become familiar with the entire system operation. There is no set tonnage of soil required to perform the field pretest. For all field testing procedure specifics, refer to *Soil Washing Field Test Procedure for the 100-DR-1 Operable Unit* (WHC 19XX).

4.1 SYSTEM RESTART WITH SOIL

With the water systems operating as detailed in Chapter 3.0 restart idle system equipment secured after checkout.

NOTE: Water systems flows should be adjusted to a "low" flow value until soil is added. (Refer to log sheet values recorded during water system checkout).

1. Place L____ S____ A____ boxes under all conveyor discharges (CO-102, CO-104, CO-105, CO-106, and CO-107).

2. Start the multideck and dewatering (drying) screen discharge conveyor belts (CO-102, CO-104, and CO-106).

   NOTE: For initial testing the drying screen will be run without a vacuum pump. If field results are unsatisfactory (wet fines discharge) the vacuum pump will be connected to provide more drainage.

3. Start both spiral classifiers and attrition scrubbers.

4. Start the water clarifier (PK-102) flocculator polymer pump (P-112). Also start the flocculator mixer and agitator.

   NOTE: Check the cone section sample taps (start at bottom) for the presence of sludge. Adjust the underflow butterfly valve to maintain sludge level between the middle and top sample taps.

5. Start the feed conveyor (CO-101) at about 25% of maximum belt speed.

   NOTE: During operation the target test feed rate is 10 tons/hr.

6. Add uncontaminated soil to the feed hopper (CO-101).

   NOTE: At this point the plant operators will have to start making adjustments to the feed conveyor (CO-101) feed rate (belt speed) water sprays and pump flows to maintain system equilibrium.

7. Start the solution clarifier (PK-107) flocculent and polymer pumps (P-112 and P-113). Also start the flocculator mixer and agitator.

   NOTE: Check the cone section sample taps, starting at the bottom, for the presence of sludge. Adjust the underflow butterfly valve to maintain the sludge level between the middle and top sample taps.

8. Start both rotary vacuum filter discharge conveyors (CO-105 and CO-107).

9. As the cake begins rising above the slurry in each rotary filter, begin to open the valve that controls vacuum to the upper portion of the drum. Have the valve fully open by the time the cake reaches top dead center.

10. Optimizing filter performance. In General:

    - Filter speed should be varied to allow sufficient pickup of cake in conjunction with an optimization of drying time.
    - Vary submergence to obtain maximum bed thickness with maximum drying time.
    - Adjust scraper blade to remove maximum amount of cake without damaging cloth.

    NOTE: Refer to the component technical manual for scraper adjustment procedure and troubleshooting guidance.

4.2 SYSTEM OPERATIONAL GUIDANCE

Operation of the soil washing system will be largely a process of trial and error to establish desired output (10 tons/hr). When the system is stable at 10 tons/hr, system flows should be recorded and compared to the calculated mass balance. While making operating adjustments use the following as guidance.

4.2.1 Liquid Polymer System

The clarity of Clarifier overflow water is an indication successful flocculation is occurring in the Clarifier. While some turbity can be expected initially, it should disappear shortly after the introduction of polymer.

If clear water is not being produced within approximately 20 minutes of feed introduction into the plant, the dosage rate should be increased. After increasing the dosage rate, approximately 20 minutes should be allowed for the system to stabilize. Water should then be sampled to judge the effects of increased rate. This trial and error process should continue until the optimum dosage rate is determined.

Determination of the optimum polymer dosage rate is extremely important to the successful operation of the plant. If the dosage rate is too small, soil particles returning with the Clarifier overflow will settle out in the storage tanks. These contaminated particles may also leave the process through the clean soil streams. If the dosage rate is too high, polymer may blind the filter cloth.

4.2.2 Soil Feed Rate

The maximum feed rate that can be sustained in the Soil Washing Plant is primarily a function of particle size distribution in the feed soil. Because this distribution will vary based on soil type, the optimum Soil Feed Rate can be determined only by operational experience.

As the plant is brought on line and capacity increased the Operator's primary goal must be to determine the maximum plant feed rate (taking possible surges into account). The following process will aid in this determination:

- Observe the load in each unit operation (conveyor belt capacity, drain tank operating level, etc.).
- Identify the unit operation having the smallest reserve capacity.
- Assess this unit operation's ability to carry more material.
- Using the soil particle size distribution as a guide, consider the effect an increase in feed rate will have on the stream feeding the unit operation.
- Assuming the incremental feed rate increase will not overload the unit operation identified above, increase the feed rate a small incremental amount. Allow the system to stabilize.

Repeat the above process until the unit operation controlling plant feed rate can be identified. The maximum feed rate resulting from this trial and error process will remain in effect as long as no significant changes in particle size distribution occur in the plant feed.

The successful operation of the plant is dependent upon a uniform and steady flow of soil into the feed hopper. Over-feeding of soil into the feed hopper is to be avoided. Soil must be fed into the hopper at a rate that will prevent plugging and/or stalling of the feed conveyor. Operating personnel should observe the bed depth of the feed conveyor to ensure a steady and uniform stream of material is being delivered to the wash system.

If plugging occurs in the feed system, and the plug cannot be safely dislodged while in operation, the feed system must be shutdown and the problem corrected. Short-term disruptions (not lasting more than 5 to 10 minutes) in the soil stream are not detrimental to the operation of the soil washing plant. If the plug cannot be removed within 5 to 10 minutes, the polymer feed systems should be shutdown to prevent overdosing of the plant process and recycle streams.

An incremental increase in plant feed rate will require a corresponding adjustment of water flow to the multideck screen. Water, in sufficient quantity, must (at all times) be provided in this units' operation to:

- Slurry soil into the multideck screen
- Thoroughly rinse oversize material on the screening surfaces
- Prevent blinding of the screen deck openings.

The amount of water required is soil dependent and can only be determined by visual inspection. The plant operator should periodically look at the screening operation to determine if a water flow adjustment is required. Visual indications of proper operation are as follows:

- **Multideck Screen Feed**:

  -- Soil is entering the multideck screen through the feed chute.

  The feed chute blockage problem is most critical to plant operations and must be addressed first. Assuming the feed conveyor is running, and is delivering soil to the feed chute, the first course of action for correcting a blockage problem is to increase water flow into the feed chute. If this increased flow does not clear the blockage immediately the Plant Operator must immediately stop the feed conveyor until the problem is corrected.

- **Multideck Screen Discharge**:

  -- Material leaving the screen consists of clean stone and gravel. Water sprays have removed fine particles and slime from the stone and gravel.

  If this visual indicator is not evident, gradually increase flow to the screen rinse sprays. If an increase in flow is not possible, reduce the plant feed rate.

  -- The screen does not have excessive blinding (i.e., near-size particles lodged in the screen opening).

  If excessive blinding is occurring, it will be necessary to suspend plant operations and manually clean the screen.

4.2.3 Water Tank Levels

For all overflow tanks connected to pump suctions, ensure the water level always remains above the pump suction line but below the overflow level.

4.2.4 Organic Material

Organic material (i.e., grass, roots, twigs, etc.) found in the feed soil, in reasonable quantity, should cause relatively few problems in the plant. The majority of this material should pass through the plant as an oversize stream from either of the two decks on the multideck screen.

4.2.5 Screw Classifiers – General

The Plant Operator should periodically observe the two spiral classifiers, particularly after an adjustment in the feed rate. A change in feed rate will obviously affect the soil separation occurring in these units.

Based on knowledge of the desired cut versus observed cut, the Operator may need to adjust the overflow weir height or water flow into the classifier. If the observed cut is not acceptable, and corrective adjustments to the classier are not possible, the plant feed rate must be reduced.

The Plant Operator should also observe the auger (spiral) load. The auger is fully loaded when material is touching the auger barrel. At no time should the conveyed material be allowed to rise above the barrel. Reduce plant feed rate if this condition is observed.

4.2.6 Primary Spiral Classifier

The Plant Operator should periodically observe material flowing in the primary classifier discharge chute to the attrition scrubber. The material should be flowing freely with little or no build-up in the chute.

The consistency (i.e., percent solids) of primary spiral classifier under-flow material directly affects flow in the discharge chute. The percent solids may need adjustment to maintain consistent flow.

Dilution water at the discharge chute should be introduced only if necessary to maintain flow in the chute. This water must be kept to a minimum because it directly affects attrition scrubber performance. Over-dilution will have a detrimental affect on the performance of the scrubber.

4.2.7 Secondary Spiral Classifier

The Plant Operator should periodically observe material flowing in the secondary classifier discharge chute feeding the second stage attrition scrubber. The material should be flowing freely with little or no buildup in the chute. If plugging of the chute is observed, increase the flow rate of dilution water into the chute.

4.2.8 Attrition Scrubbers

Periodic observation of the attrition scrubber should be made. A properly operating scrubber will have two characteristics: (1) material is continuously overflowing the scrubber discharge and (2) percent solids of the overflow material is approximately 70%.

Successful operation of the attrition scrubber depends primarily on the percent solids of material in the scrubber. If percent solids are too high, the scrubber will stall. If percent solids are too low the attriting action is reduced and the scrubbers become ineffective.

The percent solids of scrubber material can easily be lowered in one of two ways: (1) dilution water can be introduced to the scrubber chambers by momentarily opening and closing the dilution valve to

a scrubber chamber and (2) dilution water can be introduced through the primary spiral classifier discharge chute. If either method is used, water should be added in small quantities. Adequate time for stabilization must be allowed to assess the effects of this water addition. The effect of water addition may not be apparent for several minutes.

Increasing percent solids of scrubber material is more difficult to accomplish because this material characteristic is controlled by the dewatering that occurs in the primary spiral classifier. An increased plant feed rate, if possible, may effect the desired change.

The attrition scrubber must not be allowed to remain stopped for extended periods while loaded. Slurry percent solids will gradually increase, because of evaporation and settling, in an idle scrubber and prevent the scrubber from restarting. During shutdown periods lasting more than 1 hour (depending on weather conditions) start the scrubber for several minutes at regular intervals. Dilution water, in small quantity, may be added during the shutdown period.

5.0 PLANT SHUTDOWN PROCEDURES

5.1 SHUTDOWN WITH ONLY WATER IN THE SYSTEM

Before introducing soil into the system the operator does not have to be concerned with solids settling out and causing problems on restart. The major concerns at this point are overflowing the drain tanks or causing cavitation (loss of suction) of the drain tank pumps. Any mixers, belt conveyors, attrition scrubbers, vibrating screens or spiral classifiers operating may be stopped at any time.

1. Stop the rotary vacuum equipment:

   - Shut both clarifier (PK-102 and PK-107) outlet butterfly valves
   - Vacuum pumps and blowers
   - Agitators
   - Filtrate Pumps.

   NOTE: The transfer pump (P-119) associated with tank TK-104 (combined seal water drain tank) is normally operated automatically by a preset float switch.

2. Stop the recycle tanks (TK-101 and TK-102) transfer pumps, P-104 and P-109, respectively.

   CAUTION: When pumps P-104 and P-109 are stopped, the "downstream" pumps (step 3, below) will lose suction if their shutdown is delayed.

3. Stop all transfer pumps:

   - Clarifier feed pumps (P-101 and P-106)
   - Dewatering screen feed pump (P-105)
   - Dewatering screen drain pump (P-117).

CAUTION: The drain tanks associated with the above pumps have small reserve capacity before the pump suction lines are uncovered. Do not run the pumps dry.

4. If freezing weather is expected, hoses outside the tent enclosure should be drained if they are not heat traced and insulated.

5.2 SHUTDOWN WITH WATER AND SOIL IN THE SYSTEM

After introducing soil into the system, several components will need adequate additional run time to flush out suspended solids before shutdown. This additional time is necessary to prevent the possibility of the solids immobilizing shafts/impellers or plugging hoses and pipes. Steps 1 through 10 may be followed for a sequential plant shutdown. An alternative shutdown method is outlined in steps 13 through 15.

1. Stop feeding material into the grizzly (SC-101). When the feed conveyor belt (CO-101) empties, the conveyor may be stopped.

   NOTE: Water sprays on the multideck screen may need adjustment to flush out residual materials. Because the soil wash system contains only MANUAL valves, flows to and from all downstream tanks may be affected. Two or more operators may need to make simultaneous adjustments.

2. When the double deck screen is empty, stop conveyors CO-104 and CO-102. The water sprays may be turned off, however, they may be left running at a lower flow to assist in flushing out the clarifier feed pump (P-101). The clarifier feed pump outlet valve will require adjustment to maintain pump suction.

   NOTE: The first stage classifier (PK-101) spray flow may be increased to maintain level in tank TK-103.

3. With no more feed to the first stage classifier, the classifier may be stopped and the spray flow turned off.

   NOTE: A volume of residual sands in the classifier present no restart problems because the classifier screw may be raised up (using the adjustment handwheel) before restarting. This may be the case in the event of a power failure during operation. During restart the screw would be gradually lowered into the sands until it was operating properly.

   NOTE: As the flow of incoming feed from the multideck screen through the screw classifier decreases, less polymer/flocculent will be needed. Proper adjustment of the metering pumps will result from operational experience.

4. As the clarity of tank T-103 improves through dilution (from spray water or use of a portable diaphragm pump with a suction on T-101), the pump (P-101) effluent should be checked to determine when the entrained solids are reduced to the point when the pump can be stopped. Stop the pump, turn off water sprays (to the classifier PK-101), and close the clarifier (PK-102) outlet butterfly valve.

NOTE: After solids have been introduced into the system, the pump shaft should always be rotated by hand before subsequent startups to ensure the impeller is not immobilized. This note applies to all Galigher pumps (P-101, P-106, P-117, and P-109).

5. After stopping the clarifier feed pump (P-101) stop the clarifier (PK-102) flocculent pump (P-112) along with the mixer and agitator.

NOTE: If the shutdown is of short duration (one day or less) the sludge level may be maintained below the conical section upper sample tap. If shutdown is expected to last longer than one day, fresh water should be added to flush out the sludge.

6. When cake formation is poor or no longer possible on the rotary vacuum filter, it may be shutdown. The agitator should run as long as slurry remains in the filter tank.

- Stop the vacuum pump. The seal water solenoid valve should stop water flow, however, the manual valve should also be closed.

- Stop the agitator and hose off the drum.

  NOTE: Minimize wash water usage to prevent filling the tank. Wash water can be supplied by a portable diaphragm pump from T-101.

- Stop the filter drive and conveyor (CO-105).

- Stop the blower.

- Stop the filtrate pump (P-10) only after both the vacuum pump and the filter drive have been stopped and time has been allowed to pump the receiver dry. Shut the valve supplying seal water to the filtrate pump stuffing box.

- As time permits, inspect the filter for damage.

7. After stopping the first-stage classifier (PK-101) the first-stage attrition scrubber (PK-105) should continue to run, with dilution water from the solution storage tank (T-102) transfer pump (P-109) via the dewatering screen, until the drying screen is considered clean enough to be stopped. Turn off drying screen water sprays. Stop the drying screen shaker motors, the drying screen feed pump (P-105), the drying screen drain tank (T-107) transfer pump (P-117), and conveyor CO-106.

NOTE 1: Check the pump effluent for solids before stopping. The pumps may continue to run for flushing as required before proceeding to step 8, below.

NOTE 2: The remaining pulp may be left in the scrubber cells or drained out. Before restarting, the pulp should be diluted/resuspended before restarting the scrubber drive.

8. Stop the second-stage spiral classifier (PK-111) and continue operating the sprays and pump P-106 until the discharge is clear enough to stop the pump. Stop pumps P-106 and P-109 (tank TK-102 transfer pump) and close the pump P-109 discharge valve. Next close the solution clarifier (PK-107) underflow butterfly valve and the water spray control valves to the classifier (PK-111).

   CAUTION: Do not turn off the classifier water spray and attrition scrubber (PK-106) dilution water supply before stopping pump P-109. Pump damage could result if the pump runs at a shutoff condition.

   NOTE: A volume of residual sands in the classifier presents no restart problem because the classifier screw may be raised up (using the adjustment handwheel) before restarting.

9. Stop metering pumps (P-107 and P-114) on the solution clarifier (PK-107) along with the mixer and agitator. See Note, step 5, above.

10. When cake formation is poor or no longer possible on the rotary vacuum filter, it may be shutdown. The agitator should run as long as slurry remains in the filter tank.

    - Stop tank TK-101 transfer pump (P-104) and the vacuum pump. The seal water solenoid valve should stop water flow, however, the manual valve should also be closed.

      NOTE: When the vacuum pump stops (and seal water flow is halted) there will be no flow through the storage tank (T-101) transfer pump (P-104). After pump P-104 is stopped, close its discharge valve.

    - Stop the agitator and hose off the drum.

      NOTE: Minimize wash water usage to prevent filling the tank. Wash water can be supplied by a portable diaphragm pump from T-101.

    - Stop the filter drive and conveyor CO-107.

    - Stop the blower.

    - Stop the filtrate pump (P-20) only after both the vacuum pump and the filter drive have been stopped and time has been allowed to pump the receiver dry. Shut the valve supplying seal water to the filtrate pump stuffing box.

    - As time permits, inspect the filter for damage.

11. If freezing weather exists, hoses outside the tents should be drained if they are not heat traced and insulated.

12. Plant power panels may be de-energized with the exception of light and heating supplies. If light and heat are not required, the diesel generator may also be shutdown and the remaining breakers opened.

13. Alternate shutdown with soil in the system: Stop feeding material into the grizzly (SC-101) and keep equipment operating until a cake is no longer formed on either rotary drum filter. Adjust system water flow rates as required to maintain equilibrium. Conveyors may be stopped when they finish discharging material.

14. Observe NOTES in steps 1 through 10, above.

15. When all slurry pumps (P-101, P-105, P-106, and P-107) are discharging minimal solids, shutdown the system as indicated in Section 5.1.

5.3 EMERGENCY SHUTDOWN

1. In the event of an emergency in any tent (A, B, or C) an emergency "stop" button is provided at the exit to shutdown the electrical equipment operating in the tent (except lights and heaters). If any tent is given an emergency shutdown, the remaining tents should also be given an emergency "stop" and both clarifier (PK-102 and PK-107) underflow butterfly valves should be closed to prevent overflowing the drum filters.

2. If it is impractical to stop equipment from the tents, power panels PPA, PPB, and PPC may be de-energized from the electrical control center. Turning off these panels will also cause a loss of lights and heat.

6.0 REFERENCES

WHC, 19XX, *Soil Washing Field Test Procedure for the 100-DR-1 Operable Unit*, WHC-SD-EN-TI-255, Westinghouse Hanford Company, Richland, Washington.

DISTRIBUTION

Onsite (19 copies)

Controlled

Cook, K. C. (CH2) (6) H6-02
Procedures Coordination H4-79
EPIC (2) H6-08
ERC H6-07
ERE Project File H6-08
Resource Center N3-05

Uncontrolled
Belden, R. D. (CH2) H6-01
Blankenship, D. D.(WHC) X8-29
Kerkow, R. B. (ITC) H6-01
Hoyle, J. R. (CH2) H4-79
Mukherjee, B. F. (BHI) H4-79
DeSemple, D. L. (CH2) H4-79
Byers, D. R. (BHI) X5-57

9513346.0952

BHI-OP-00017
REV: 00
OU: 100-DR-1
TSD: N/A
ERA: N/A

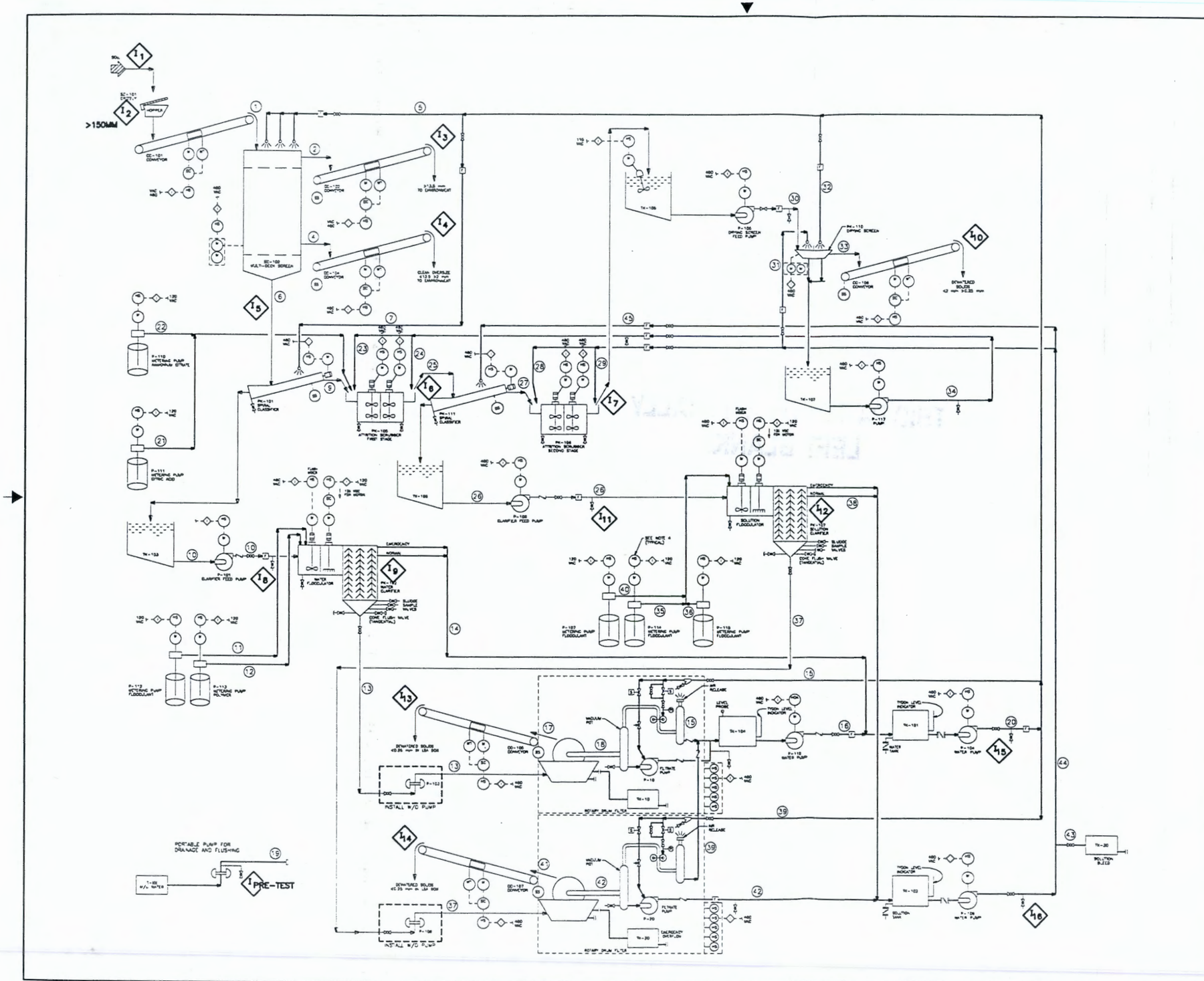

NOTES

1. COMPONENT INTERCONNECTIONS ARE MADE VIA RUBBER HOSES.
2. INITIAL TESTING OF THE CLARIFIERS WILL BE DONE WITHOUT UNDERFLOW PUMPS (P-103 AND P-108) INSTALLED.
3. THIS DRAWING IS CONFIGURED TO SHOW USING AN ELECTROLYTE SOLUTION IN TK-102. IF ONLY WATER IS USED FOR THE FIELD TESTING 1 FLOCCULANT TANK WILL BE USED AT PK-102 AND 2 FLOCCULANT TANKS WILL BE USED AT PK-107.
4. METERING PUMP AND FLOCCULATOR MIXER & AGITATOR CONTROLS ARE LOCATED IN THE CLARIFIER CONTROL CABINET.

LEGEND

- BALL VALVE (OPEN)
- BALL VALVE (CLOSED)
- BUTTERFLY VALVE
- CHECK VALVE
- NEEDLE VALVE
- SOLENOID OPERATED VALVE
- HOSE CONNECTION
- END PLUG
- SPRAY NOZZLE
- FLOW METER
- SAMPLE POINT
- MOTOR
- HAND SWITCH
- SPEED CONTROL
- SPEED SENSOR
- WT. SCALE
- HAND OFF AUTO SWITCH
- INTERFACE
- STREAM NUMBER
- AGITATOR
- MIXER
- AIR OPERATED DIAPHRAGM PUMP
- CENTRIFUGAL PUMP

REV.	DATE	DESCRIPTION	BY	CHK	ENGR	CH2M HILL APPROV	BHI PROJ ENGR
0	11/02/94	ISSUED FOR PROCEDURE MANUAL	JJA				

SCALE NONE

U.S. DEPARTMENT OF ENERGY
DOE FIELD OFFICE, RICHLAND
HANFORD ENVIRONMENTAL RESTORATION PROGRAM

BECHTEL HANFORD INC. RICHLAND, WASHINGTON | CH2M HILL HANFORD INC. RICHLAND, WASHINGTON

100 AREA SOIL WASHING TREATABILITY TEST
100-DR-1 OPERABLE UNIT
PROCESS AND INSTRUMENTATION DIAGRAM

BECHTEL JOB NO.	DOE CONTRACT NO.	CADD FILENAME
22192	DE-AC06-93RL12367	PE7FAM1A.DWG

DRAWING NO.
100-PE7FA-M001

THIS PAGE INTENTIONALLY
LEFT BLANK

9513546.0933

BHI-OP-00017
REV: 00
OU: 100-DR-1
TSD: N/A
ERA: N/A

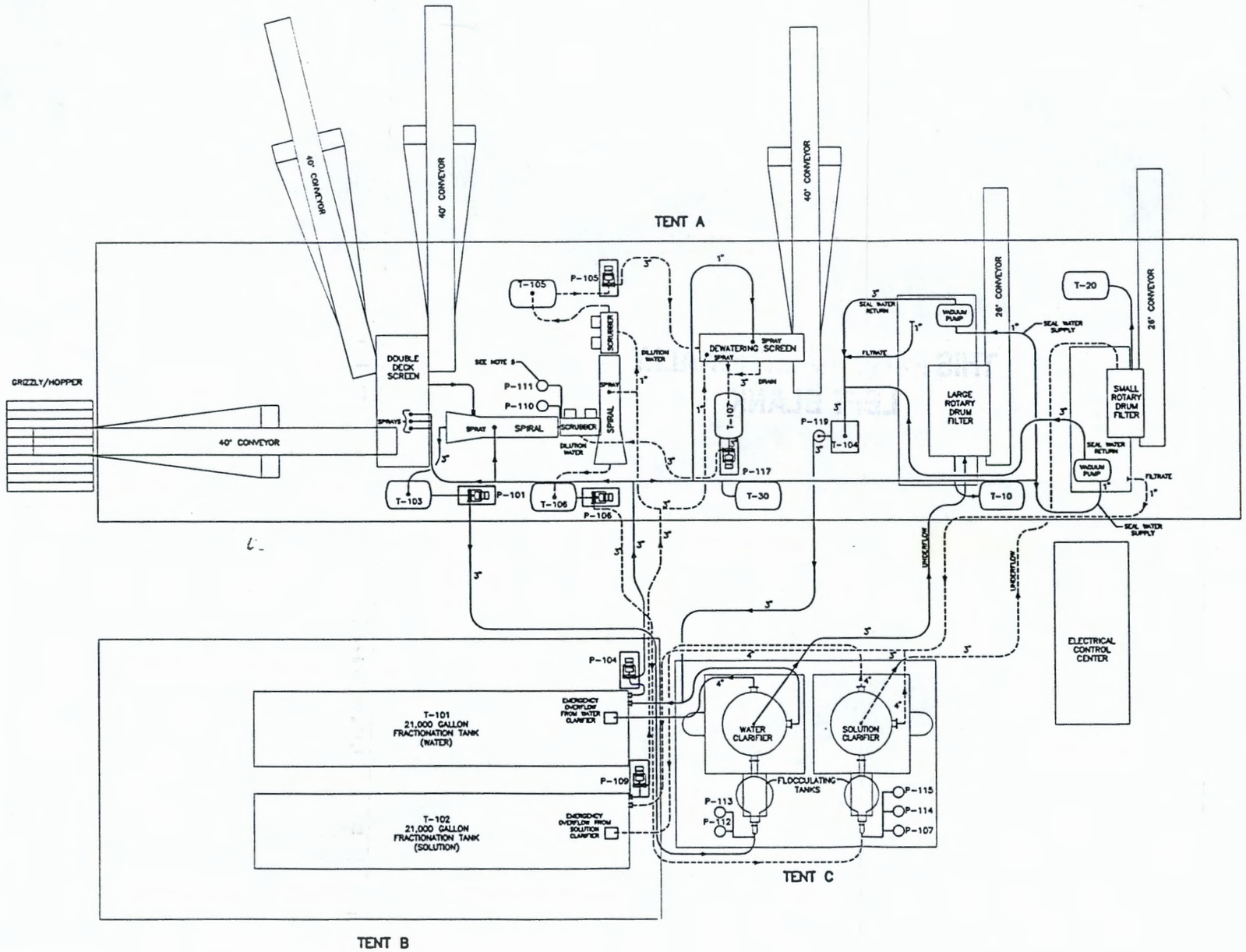

NOTES

1. SYSTEM CONFIGURATION FOR INITIAL STARTUP AND TESTING. COMPONENT INTERCONNECTIONS ARE MADE VIA RUBBER HOSES WITH CAM-LOCK FITTINGS. VALVES HAVE BEEN OMITTED FOR CLARITY.
2. SEE F&ID DRAWING NO. 100-PE7FA-M001 FOR DETAILS OF VALVES, FLOWMETERS AND SAMPLE POINTS.
3. BERM OUTLINES ARE NOT SHOWN ON THIS DRAWING. SEE DRAWING NO. PE7FA-S3.
4. PORTABLE AIR OPERATED DIAPHRAGM PUMPS AND ADDITIONAL LENGTHS OF HOSE ARE AVAILABLE FOR FILLING AND/OR DRAINAGE.
5. P-110 AND P-111 ARE INSTALLED ONLY IF AN ELECTROLYTE IS ADDED TO THE SYSTEM FOR ENHANCED RADIONUCLIDE REMOVAL.

LEGEND

- T-XXX — POLYETHYLENE TANK - 220 GALLONS
- CENTRIFUGAL PUMP (CLEAN WATER)
- P-XXX — METERING PUMP
- SLURRY PUMP

REV.	DATE	DESCRIPTION	BY	DATE	CHKD	CHKD BY	APPROVED	BY CHKD
A	11/11/94	ISSUED FOR CONSTRUCTION	JJA					

SCALE NONE

U.S. DEPARTMENT OF ENERGY
DOE FIELD OFFICE, RICHLAND
HANFORD ENVIRONMENTAL RESTORATION PROGRAM

BECHTEL HANFORD INC. RICHLAND, WASHINGTON | CH2M HILL HANFORD INC. RICHLAND, WASHINGTON

100 AREA SOIL WASHING TREATABILITY TEST
EQUIPMENT LAYOUT AND HOSE ROUTING

BECHTEL JOB NO.	DOE CONTRACT NO.	CADD FILENAME
22192	DE-AC06-93RL12367	PE7FAM2.DWG

DRAWING NO.
100-PE7FA-M002

THIS PAGE INTENTIONALLY
LEFT BLANK

9513346.0934

Bechtel Hanford, Inc.	TRANSMITTAL FOR CONTROLLED PROCEDURES	
EPIC 09 H6-08	Transmittal No. TR-OP-24	Date 11-18-94
	Document No./Title of Manual BHI-OP-00017	

The procedure(s) listed below are being issued by BHI Procedures Coordination as new or revised procedures.

PROCEDURE NO.	REV. NO.	TITLE
BHI-OP-00017	0	Startup and Operating Procedure for Pilot-Scale Soil Washing/Treatability Tests at Hanford 100-DR-1 Area

Receipt Acknowledgment

I acknowledge receipt of the procedure(s) listed above. These procedures have been appropriately inserted and the superseded material removed and disposed of.

Signature: John Riley Date: 11-28-94

New address if different than listed above _____

PLEASE RETURN THIS SIGNED TRANSMITTAL WITHIN TEN WORKING DAYS TO

BHI Procedures Coordination/Natalie Maiuri
372-9555
H4-79

BHI-DC-001 (8/94)

PLEASE DO NOT STAPLE OR TAPE

THIS PAGE INTENTIONALLY
LEFT BLANK