0022552

WHC-SD-NR-ES-014
Revision 0

# N Reactor Wastewater Treatment System Summary Engineering Report

AUG 1992
RECEIVED
EDMC

Prepared for the U.S. Department of Energy
Office of Environmental Restoration and Waste Management

Westinghouse
Hanford Company Richland, Washington

Hanford Operations and Engineering Contractor for the
U.S. Department of Energy under Contract DE-AC06-87RL10930

Approved for Public Release

**LEGAL DISCLAIMER**

This report was prepared as an account of work sponsored by an agency of the United States Government. Neither the United States Government nor any agency thereof, nor any of their employees, nor any of their contractors, subcontractors or their employees, makes any warranty, express or implied, or assumes any legal liability or responsibility for the accuracy, completeness, or any third party's use or the results of such use of any information, apparatus, product, or process disclosed, or represents that its use would not infringe privately owned rights. Reference herein to any specific commercial product, process, or service by trade name, trademark, manufacturer, or otherwise, does not necessarily constitute or imply its endorsement, recommendation, or favoring by the United States Government or any agency thereof or its contractors or subcontractors. The views and opinions of authors expressed herein do not necessarily state or reflect those of the United States Government or any agency thereof.

This report has been reproduced from the best available copy.

Printed in the United States of America

DISCLM-2.CHP (1-91)

# SUPPORTING DOCUMENT

1. Total Pages 152

2. Title

N-Reactor Wastewater Treatment System Summary Engineering Report

3. Number

WHC-SD-NR-ES-014

4. Rev No.

REV. 0

5. Key Words

N-Reactor, Wastewater Treatment, NPDES, BAT

6. Author

Name: G.S. Hunacek

Signature

Organization/Charge Code 11120/KN311

7. Abstract

This summary engineering report has been prepared to establish the best available technology (BAT) economically achievable for the N-Reactor wastewater. This Treatment system was chosen from among three alternatives following the process called BAT. This report can also support detailed design and construction of a treatment system before discharging N-Reactor effluent to the river.

8. ~~PURPOSE AND USE OF DOCUMENT - This document was prepared for use within the U.S. Department of Energy and its contractors. It is to be used only to perform, direct, or integrate work under U.S. Department of Energy contracts. This document is not approved for public release until reviewed.~~

~~PATENT STATUS - This document copy, since it is transmitted in advance of patent clearance, is made available in confidence solely for use in performance of work under contracts with the U.S. Department of Energy. This document is not to be published nor its contents otherwise disseminated or used for purposes other than specified above before patent approval for such release or use has been secured, upon request, from the Patent Counsel, U.S. Department of Energy Field Office, Richland, WA.~~

DISCLAIMER - This report was prepared as an account of work sponsored by an agency of the United States Government. Neither the United States Government nor any agency thereof, nor any of their employees, nor any of their contractors, subcontractors or their employees, makes any warranty, express or implied, or assumes any legal liability or responsibility for the accuracy, completeness, or any third party's use or the results of such use of any information, apparatus, product, or process disclosed, or represents that its use would not infringe privately owned rights. Reference herein to any specific commercial product, process, or service by trade name, trademark, manufacturer, or otherwise, does not necessarily constitute or imply its endorsement, recommendation, or favoring by the United States Government or any agency thereof or its contractors or subcontractors. The views and opinions of authors expressed herein do not necessarily state or reflect those of the United States Government or any agency thereof.

9. Impact Level 3 QE

10. RELEASE STAMP

OFFICIAL RELEASE BY WHC (14)

DATE JUL 27 1992

Sta. 1

(*) LEGENDS REMOVED
PER GENERAL COUNSEL'S OFFICE
B.D. WILLIAMSON by M. Boster
7/27/92

**APPROVED FOR PUBLIC RELEASE**

## EXECUTIVE SUMMARY

The U.S. Department of Energy (DOE) plans to cease discharges to the 1325-N Liquid Waste Disposal Facility (LWDF) in the 100 N Area of the Hanford Site. This action is required to meet Milestone M-17-15 of the Hanford Federal Facility Agreement and Consent Order (the Tri-Party Agreement) (Ecology et al. 1989), and commitments under a related agreement with the Washington Department of Ecology (Ecology) for the management of liquid effluents at the Hanford Site.

This summary engineering report has been prepared to establish the best available technology (BAT) economically achievable for the N Reactor wastewater. This report will also support the detailed design and construction of a system to treat the N Reactor wastewater before discharging it to the Columbia River under a National Pollutant Discharge Elimination System (NPDES) permit. The treatment system was chosen from among three alternatives following the process outlined in the Westinghouse Hanford Company (Westinghouse Hanford) guidance document *Best Available Technology (Economically Achievable) Guidance Document for the Hanford Site* (WHC 1988).

A treatment process was selected using a disciplined assessment methodology (WHC 1988). This assessment selected a process that satisfies the federal BAT standard using the generic treatment system method (WHC 1988). The selected process includes treatment for suspended solids using a backflushable microfilter and removal of dissolved solids using ion-exchange treatment. Organic compounds are removed using granulated activated carbon (GAC) adsorption.

As a part of the overall management of wastewater at the N Reactor, approximately one-half of the wastewater (an average of 428,000 gal/yr) that will be generated during fiscal years (FY) 1994 to 1999 will be treated and recycled back to the 105-N Fuel Basin area for reuse in N Reactor shutdown activities.

The treatment system has been sized to treat the remainder of the wastewater, an average of approximately 480,000 gal per year, at a flow rate of 10 gal/min. Portions of the treatment system will be used to treat wastewater for recycle to the 105-N Fuel Basin area when wastewater is not being treated for discharge to the 009 Outfall. Using this approach, 81% to 91% of the treatment system capacity will be used in the peak flow years (FY 1997 and FY 1998), assuming a 5-day-per-week, 8-hour-per-day operation.

Three alternative treatment processes were considered for this application, and the best alternative was selected based on a set of evaluation criteria. These criteria included the effectiveness of the treatment system, the cost of treatment, and implementation considerations. Implementation considerations included schedule constraints, worker and public exposure to hazardous materials, treatment system flexibility, process development status, secondary waste, and treatment system reliability.

The selected alternative meets treatment goals for all dissolved and suspended solids and organics, and most radionuclides in the treated effluent. Effluent comparative levels are not met for tritium. Cost-effective technologies for the removal of tritium do not currently exist for wastewater similar to that generated by N Reactor.

Effluent comparative levels are developed in this report for the purpose of evaluating treatment alternatives for the N Reactor wastewater. The effluent comparative levels for chemical constituents are based on ambient water quality limits published in state and federal regulations and guidance documents. These ambient limits are meant to apply to the receiving water body, and not necessarily to the effluent at the point of discharge. Similarly, the effluent comparative levels for radionuclides are based upon the derived concentration guidelines (DCGs) established in DOE Order 5400.5 for the purpose of determining if wastewater should be treated before discharge into the environment (DOE 1990). Therefore, the effluent comparative levels are not meant to be discharge limits.

Detailed, current wastewater characterization data for discharges to the 1325-N LWDF were not yet available; however, recent data indicate that the chemical composition of the current discharge to the 1325-N LWDF is similar to that observed during an extensive sampling effort in 1990 (WHC 1990a). Therefore, data from the 1990 samples were used to develop an anticipated stream composition as a design basis for evaluating systems for treatment of the N Reactor wastewater before discharge to the Columbia River. Recent samples of the N Reactor wastewater indicated that key beta-emitting radionuclides (tritium, $^{60}Co$, $^{90}Sr$, $^{134}Cs$, and $^{137}Cs$) had increased in concentration over those observed in 1990 by factors ranging from 3 to 28. Therefore, the design basis assumes an order of magnitude increase in concentration for radionuclides over those observed in 1990 in the wastewater. A similar method was used to develop a design basis for treatment of wastewater for recycle.

The most cost-effective management strategy for the relatively small volumes of secondary waste generated by the treatment process appears to be treatment and disposal via the Hanford Grout Treatment Facility (GTF) and Central Waste Complex. Most secondary wastes are assumed to be mixed (radioactive and dangerous) wastes based upon the removal efficiencies achieved by the treatment train and the estimated influent concentrations of toxic characteristic metals.

The rough order of magnitude installed equipment cost for the selected treatment alternative is approximately $1.3 million. Annual operating costs are approximately $592,000. Based on a design life of 6 years, the installed equipment cost and annual operating costs represent a present worth of about $4.1 million.

## CONTENTS


1.0 INTRODUCTION . . . . . 1

2.0 WATER USE AND WASTEWATER CHARACTERIZATION . . . . . 3
2.1 WATER USE AND WASTEWATER SOURCES . . . . . 3
2.1.1 Current Sources for Discharges to 1325-N Liquid Waste Disposal Facility . . . . . 3
2.1.2 Future Sources of N Reactor Wastewater . . . . . 5
2.1.3 Wastewater Sources Discharged to the 009 Outfall . . . . 7
2.2 WASTEWATER CHARACTERIZATION . . . . . 7
2.2.1 Characterization Data Summary for Current Discharges to 1325-N Liquid Waste Disposal Facility . . . . . 7
2.2.2 Wastewater Characterization for Future Discharges . . . 8
2.2.3 Constituent Sources . . . . . 8
2.3 DESIGN BASIS WASTEWATER COMPOSITION . . . . . 11
2.3.1 Sources to be Treated and Discharged via the 009 Outfall . . . . . 12
2.3.2 Sources to be Recycled . . . . . 12

3.0 WATER QUALITY STANDARDS . . . . . 17
3.1 OUTFALL LOCATION . . . . . 17
3.2 RIVER CHARACTERISTICS . . . . . 17
3.2.1 River Flow . . . . . 17
3.2.2 River Topography . . . . . 18
3.2.3 Ambient River Water Quality . . . . . 18
3.3 WATER QUALITY STANDARDS APPLICABLE TO THE TREATED N REACTOR EFFLUENT . . . . . 18
3.3.1 Clean Water Act . . . . . 18
3.3.2 Radiation Exposure Limits . . . . . 23
3.3.3 Drinking Water Standards . . . . . 23
3.3.4 Ambient Surface Water Quality Standards . . . . . 23
3.3.5 Effluent Guidelines Summary . . . . . 24

4.0 WASTEWATER TREATMENT ALTERNATIVES ANALYSIS . . . . . 27
4.1 THE BEST AVAILABLE TECHNOLOGY PROCESS . . . . . 27
4.2 TECHNOLOGY SCREENING . . . . . 29
4.2.1 No Action . . . . . 30
4.2.2 Source Control . . . . . 31
4.2.3 End-of-Pipe Treatments . . . . . 32
4.2.4 Summary of Technology Screening . . . . . 39
4.3 BEST AVAILABLE TECHNOLOGY PROCESS EVALUATION . . . . . 40
4.3.1 Description of the Alternatives . . . . . 40
4.3.2 Evaluation Criteria . . . . . 47
4.3.3 Evaluation of the Alternatives . . . . . 51
4.4 RECOMMENDED ALTERNATIVE . . . . . 66

5.0 PROPOSED TREATMENT SYSTEM . . . . . 69
5.1 PROCESS DESCRIPTION . . . . . 69
5.1.1 Treatment of Wastewater for Discharge to the Columbia River . . . . . 69
5.1.2 105-N Fuel Basin Decontamination Water Treatment System . . . . . 74

**CONTENTS (cont.)**

5.2 SIZING CRITERIA FOR TREATMENT UNITS . . . . . 75
5.2.1 Wastewater Accumulation and Equalization . . . . . 76
5.2.2 Filtration . . . . . 76
5.2.3 Ion Exchange . . . . . 76
5.2.4 Granulated Activated Carbon Adsorption . . . . . 77
5.2.5 Effluent Collection, Neutralization, and Sampling . . . 78
5.3 LIMITATIONS . . . . . 78

6.0 REFERENCES . . . . . 79

APPENDIXES

A ALTERNATIVE A TREATMENT EQUIPMENT SIZING AND SECONDARY WASTE CALCULATIONS . . . . . A-1

B ALTERNATIVE B TREATMENT EQUIPMENT SIZING AND SECONDARY WASTE CALCULATIONS . . . . . B-1

C ALTERNATIVE C TREATMENT EQUIPMENT SIZING AND SECONDARY WASTE CALCULATIONS . . . . . C-1

D DECONTAMINATION WASTEWATER RECYCLE SYSTEM TREATMENT EQUIPMENT SIZING AND SECONDARY WASTE CALCULATIONS . . . . . D-1

E SHUTDOWN EFFLUENT SOURCES (AS PROVIDED BY WESTINGHOUSE HANFORD) . . . . . E-1

F APPLICATION OF THE BEST AVAILABLE TECHNOLOGY PROCEDURE TO THE N REACTOR WASTEWATER . . . . . F-1

G OFFSITE DOSE CALCULATIONS . . . . . G-1

## LIST OF FIGURES

2-1 Water Balance Diagram . . . . . 4

3-1 Columbia River Topography . . . . . 19

3-2 Columbia River Topography . . . . . 21

4-1 Best Available Technology Determination Process . . . . . 28

4-2 Alternative A Flow Schematic . . . . . 42

4-3 Alternative B Flow Schematic . . . . . 45

4-4 Alternative C Flow Schematic . . . . . 46

5-1 Process Flow Diagram . . . . . 70

## LIST OF TABLES


2-1 Estimated 1325-N Liquid Waste Disposal Facility Wastewater Volumes by Source in 1,000 Gallons . . . . . 6

2-2 Summary of N Reactor Effluent Sources Characterization Data . . . . 9

2-3 Characterization Data Summary for N Reactor Effluent Radiochemical Constituents . . . . . 10

2-4 Design Basis Concentrations for Chemical Constituents in N Reactor Wastewater . . . . . 13

2-5 Design Basis Concentrations for Radiochemical Constituents in N Reactor Wastewater . . . . . 14

3-1 Comparative Effluent Levels and Ambient Columbia River Concentrations . . . . . 22

4-1 Potential Wastewater Treatment Technologies . . . . . 30

4-2 Scoring Matrix . . . . . 47

4-3 Alternative A Effluent Quality . . . . . 53

4-4 Cost Estimate Treatment Alternative A . . . . . 58

4-5 Alternative B Effluent Quality . . . . . 59

4-6 Cost Estimate Treatment Alternative B . . . . . 62

4-7 Alternative C Effluent Quality . . . . . 64

4-8 Cost Estimate Treatment Alternative C . . . . . 65

4-9 Alternative Reading . . . . . 67

5-1 Estimated Effluent Composition at Discharge to Columbia River . . . 73

## ACRONYMS AND ABBREVIATIONS

| | |
|---|---|
| ALARA | As low as reasonably achievable (radiation exposure) |
| ANS | American Nuclear Society |
| ANSI | American National Standards Institute |
| ARL | Alden Research Laboratory |
| ASME | American Society of Mechanical Engineers |
| BAT | best available technology (economically achievable) |
| BMP | best management practices |
| CFR | Code of Federal Regulations |
| CWA | *Clean Water Act of 1977* |
| DCG | derived concentration guidelines |
| DF | decontamination factor |
| DOE | U.S. Department of Energy |
| Ecology | Washington State Department of Ecology |
| EPA | U.S. Environmental Protection Agency |
| FY | fiscal year |
| GAC | granulated activated carbon |
| GTF | Hanford Grout Treatment Facility |
| IX | ion exchange |
| LDR | land disposal restriction |
| LWDF | Liquid Waste Disposal Facility |
| LETF | Liquid Effluent Treatment Facility |
| LOEL | lowest observed effects levels |
| MCL | maximum contaminant levels |
| MCLG | maximum contaminant level goals |
| MVR | mechanical vapor recompression |
| NGVD | National Geodetic Vertical Datum |
| NPDES | National Pollutant Discharge Elimination System |
| PAC | powdered activated carbon |
| PCB | polychlorinated biphenyls |
| PFD | process flow diagram |
| RCRA | *Resource Conservation and Recovery Act of 1976* |
| RCW | Revised Code of Washington |
| RO | reverse osmosis |
| SLM | supported liquid membrane |
| SMCL | secondary maximum contaminant levels |
| SPCC | spill prevention, control and countermeasures |
| SWDP | State Waste Discharge Permit |
| TEMR | toxic equivalent mass removed |
| TOC | total organic carbon |
| Tri-Party Agreement | *Hanford Federal Facility Agreement and Consent Order* |
| TSS | total suspended solids |
| TWF | toxic weighting factor |
| UNC | United Nuclear Corporation (previously UNI) |
| UNI | United Nuclear Incorporated |
| UV | ultraviolet (light) |
| WAC | Washington Administrative Code |
| Westinghouse Hanford | Westinghouse Hanford Company |
| WPCA | Washington State *Coastal Waters Protection Act of 1971* |
| WQC | Water Quality Criteria |

## Metric Conversion Chart

| INTO METRIC | | |
|---|---|---|
| If you know: | Multiply by: | To get: |
| **Mass** | | |
| pounds | 0.4536 | kilograms |
| **Length** | | |
| inches | 2.54 | centimeters |
| feet | 30.48 | centimeters |
| **Volume** | | |
| gallons | 3.785 | liters |
| cubic feet | 0.02832 | cubic meters |
| **Temperature** | | |
| Fahrenheit | Subtract 32 then multiply by (5/9) | Celsius |
| **Pressure** | | |
| inches water | 1.87 | millimeters Hg |
| inches water | 249 | Pascal (Pa) |

| OUT OF METRIC | | |
|---|---|---|
| **Mass** | | |
| kilograms | 2.205 | pounds |
| **Length** | | |
| centimeters | 0.3937 | inches |
| meters | 3.28 | feet |
| **Volume** | | |
| milliliters | $1.247 \times 10^{-3}$ | cubic feet |
| liters | 0.264 | gallons |
| cubic meters | 35.31 | cubic feet |
| **Temperature** | | |
| Celsius | Multiply by (9/5) then add 32 | Fahrenheit |
| **Pressure** | | |
| millimeters Hg | 0.5353 | inches water |
| Pascal (Pa) | $4.02 \times 10^{-3}$ | inches water |

# N REACTOR WASTEWATER TREATMENT SYSTEM

## 1.0 INTRODUCTION

The Hanford Site N Reactor is located in the 100 N Area along the Columbia River, approximately 29 mi north of Richland, Washington. From 1963 to 1987 it was operated by the U.S. Department of Energy (DOE) to produce special nuclear materials. The N Reactor is not currently operating to produce special nuclear materials, and special nuclear material production will not occur at the N Reactor in the future. The N Reactor is currently in dry layup configuration; shutdown activities have started as a prerequisite to decommissioning. Current and future activities include decontaminating and stabilizing radiologically contaminated areas of the N Reactor facilities, and removing radiologically contaminated equipment for disposal. Shutdown of N Reactor is scheduled to be complete in fiscal year (FY) 1999.

Two major facilities at the 100 N Area currently discharge wastewater to the 1325-N Liquid Waste Disposal Facility (LWDF), a soil-column infiltration unit that is used to dispose of liquid effluents from radiologically contaminated areas. These include the 105-N Reactor Facility and its associated spent fuel storage basins, and the 109-N Steam Generator Facility.

Nonradiologically contaminated wastewater from the 100 N Area is currently discharged to the Columbia River through a series of outfalls that are permitted under the National Pollutant Discharge Elimination System (NPDES). Each of the N Reactor wastewater sources are described in further detail in Section 2 of this document.

In May 1989 an agreement reached between DOE, the U.S. Environmental Protection Agency (EPA), and the Washington Department of Ecology (Ecology) set priorities for environmental remediation activities at the Hanford Site (Ecology et al. 1989). This agreement (known as the Tri-Party Agreement) was amended in October 1991 to include Milestone M-17-15, "Cease discharge to the 1325-N LWDF system," by June 1995.

The DOE is seeking an NPDES permit to discharge the treated effluent to the Columbia River through the existing 009 Outfall.

Actions regarding the selection, construction, and operation of a treatment system for the N Reactor wastewater will require permits, including an NPDES permit under the *Clean Water Act of 1977* (aka *Water Pollution Control Act*) (CWA) for discharge to the Columbia River. One requirement for gaining an NPDES permit is to demonstrate to the regulatory agencies that the best available technology economically achievable (BAT) will be used to prevent the degradation of surface water by effluent discharges. The CWA provides guidance on the regulatory meaning of BAT as it applies to wastewater treatment systems. This engineering study was performed to establish the appropriate level of treatment for the N Reactor wastewater stream to meet these requirements and commitments.

This page intentionally left blank.

# 2.0 WATER USE AND WASTEWATER CHARACTERIZATION

This section discusses water use at the N Reactor, including wastewater sources that currently discharge to the 1325-N LWDF and sources that discharge to the Columbia River via the 009 Outfall. Future sources of wastewater that will be generated during N Reactor shutdown activities are also discussed. The chemical composition and physical characteristics of each wastewater discharge are summarized.

## 2.1 WATER USE AND WASTEWATER SOURCES

Figure 2-1 depicts the current water distribution and wastewater collection and disposal systems at the N Reactor. Currently, only two sources of water exist at the N Reactor. These sources are potable water generated by an onsite filter plant which receives makeup water from Hanford Site export (raw) water system, and storm water runoff. The Hanford Site export (raw) water system is supplied from the Columbia River at intake structures located at the 100-B and 100-D areas. Potable water is normally supplied to the N Reactor facility at a rate of approximately 200 gal/min. Flow rates of up to 1300 gal/min may occur if fire systems are activated.

The wastewater that is currently discharged to the 1325-N LWDF is the focus of this report. These discharges will be discussed first, followed by a brief discussion of N Reactor wastewater sources that discharge to the Columbia River via the 009 Outfall.

### 2.1.1 Current Sources for Discharges to 1325-N Liquid Waste Disposal Facility

Currently, five miscellaneous sources of wastewater discharge to the 1325-N LWDF. Most of these wastewater sources discharge intermittently, and the actual volumes contributed by individual sources cannot be readily measured or estimated. Together these sources contribute on the order of 100,000 to 150,000 gal/yr of wastewater to the 1325-N LWDF discharge based upon wastewater accumulations measured in the 105-N Lift Station and 109-N Sumps.

**2.1.1.1 Floor Drain Discharges, Potable Water System Leaks, and Fire System Leaks.** Wastewater from leaks in those portions of the potable and fire water systems that service areas of the 105-N and 109-N Buildings is collected in floor drains in these buildings. Floor drains in the 105-N Building are routed to the 105-N Lift Station and from there flow to the 1325-N LWDF. The floor drains in the 109-N Facility discharge to the 1325-N LWDF via the 1301-N Weir Box. The actual volume of the discharge from all of these sources has not been measured, but is estimated to be up to 95,000 gal/yr.

**2.1.1.2 Fire System Runoff.** If a fire occurs in the radiologically contaminated areas of either the 109-N or 105-N Buildings, runoff water from fire-fighting activities will be discharged to the 1325-N LWDF via the floor drains described above. The potential wastewater flow rate from this source is up to 1,300 gal/min for approximately 4 h.

Figure 2-1. Water Balance Diagram.

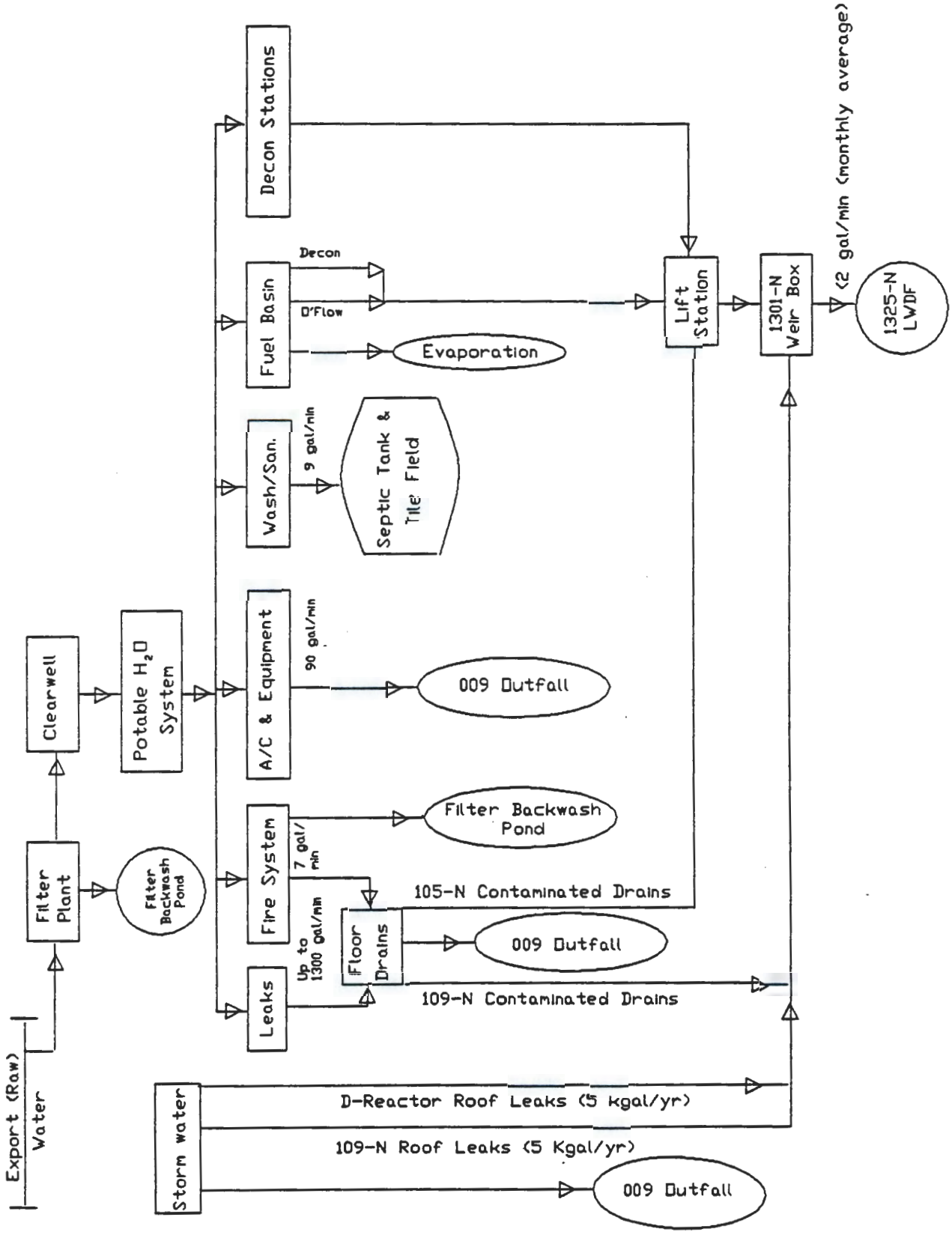

**2.1.1.3 Storm Water Intrusion.** Storm water from leaks in the D Reactor facility is collected in a sump at the D Reactor and periodically shipped by tanker to the N Reactor for disposal. The D Reactor contributes approximately 5,000 gal/yr of wastewater. Similarly, storm water runoff from leaks in the roof of the 109-N Building collects in sumps within the building and is routed to the 1325-N LWDF via the 1301-N Weir Box, bypassing the 105-N Lift Station. The contribution of this stream to the total volume of wastewater has not been measured, but is assumed to be on the order of 5,000 gal/yr based upon D Reactor storm water volumes.

**2.1.1.4 105-N Fuel Basin Activities.** Water currently used for radiation shielding and hardware decontamination in the 105-N Fuel Basin overflows into the 105-N Lift Station and eventually discharges to the 1325-N LWDF. Wastewater from equipment and area decontamination activities within the fuel basin building is also collected in the 105-N Lift Station and discharged to the 1325-N LWDF. The total volume of wastewater contributed to the 1325-N discharge by 105-N Fuel Basin activities is variable; daily average flow rates during 105-N Fuel Basin decontamination activities in April 1991 were on the order of 0.75 to 1.0 gal/min.

**2.1.1.5 105-N Decontamination Stations.** Wastewater from personnel and equipment decontamination within the 105-N Building drains to the 105-N Lift Station before discharge to the 1325-N LWDF. The volume of wastewater generated by personnel and equipment decontamination is unknown. Activities within the 105-N Building have been substantially reduced and occur infrequently; therefore, the contribution of this source to the total 1325-N LWDF wastewater discharge is believed to be extremely small.

### 2.1.2 Future Sources of N Reactor Wastewater

Many of the activities that must occur before FY 1999 to support shutdown of the N Reactor will generate significant quantities of wastewater. Five of these activities will produce wastewater in areas that currently drain to the 1325-N LWDF. These activities and their associated wastewater volumes are summarized in Table 2-1 and Sections 2.1.2.1 through 2.1.2.5. These activities are described in greater detail in the *N Reactor Shutdown Program Plan* (WHC 1991a). A more detailed explanation of the wastewater volume projections discussed below is provided in Appendix E.

**2.1.2.1 Radiation Zone Reduction.** Radiologically contaminated areas within the 105-N and 109-N Buildings will be decontaminated to the extent possible during N Reactor shutdown. During this decontamination, substantial quantities of water will be used to flush and scrub contaminated areas. Approximately 400,000 gal of wastewater are anticipated to be generated by radiation zone reduction activities each year during FY 1994, 1995, and 1996.

**2.1.2.2 105-N Fuel Basin Hardware Decontamination.** Approximately 1,000,000 lb of underwater equipment and hardware that remains in the 105-N Fuel Basin must be removed from the 105-N Fuel Basin and undergo minimal decontamination before disposal (WHC 1991a). These decontamination activities are anticipated to generate approximately 150,000 gal/yr of wastewater in FY 1994 and 1995, and 1.1 Mgal of wastewater in FY 1997.

Table 2-1. Estimated 1325-N Liquid Waste Disposal Facility Wastewater Volumes by Source in 1,000 Gallons.

| Sources | Volume (1000 gal) | | | | | | | |
|---|---|---|---|---|---|---|---|---|
| | 1992* | 1993 | 1994 | 1995 | 1996 | 1997 | 1998 | 1999 |
| **Future Wastewater Sources** | | | | | | | | |
| Candidates for recycle | | | | | | | | |
| Draining and decontamination of piping, pits, and sumps | 150 | | 120 | | | 120 | 60 | 120 |
| Draining and decontamination of 105-N Fuel Basin | | | | | 150 | 600 | | |
| 105-N Fuel Basin hardware decontamination | | | 150 | 150 | | 1100 | | |
| Candidates for disposal | | | | | | | | |
| Radiation zone reduction | | | 400 | 400 | 400 | | | |
| Draining and decontamination of 105-N Fuel Basin | | | | | | | 1000 | |
| Draining of D Reactor Test Loop | | | 45 | | | | | |
| **Current Wastewater Sources** | | | | | | | | |
| Candidates for disposal | | | | | | | | |
| Floor drain discharges, potable water system leaks, and fire system leaks | | 95 | 95 | 95 | 95 | 95 | 95 | 95 |
| Stormwater intrusion | 5 | 10 | 10 | 10 | 10 | 10 | 10 | 10 |
| 105-N Decontamination Stations (negligible) | | | | | | | | |
| Fire system runoff (1300 gal/min potential during fire) | | | | | | | | |
| Total | 155 | 105 | 820 | 655 | 655 | 1925 | 1165 | 225 |
| Cumulative | 155 | 260 | 1080 | 1735 | 2390 | 4315 | 5480 | 5705 |

Note: Years refer to fiscal years.

**2.1.2.3 Draining and Decontamination of Piping, Pits, and Sumps.** Pits within the 105-N Fuel Basin area and wastewater sumps throughout the 105-N and 109-N Buildings will be drained and decontaminated. These activities are anticipated to generate a total of 570,000 gal of water during FY 1992 to 1999.

**2.1.2.4 Draining and Decontamination of 105-N Fuel Basin.** Shielding water will be drained from the 105-N Fuel Basin after all equipment is removed and the 105-N Fuel Basin has been decontaminated. This activity is anticipated to generate approximately 150,000 gal of wastewater in FY 1996; 600,000 gal of wastewater in FY 1997; and 1,000,000 gal of wastewater in FY 1998.

**2.1.2.5 Draining of D Reactor Test Loop.** The D Reactor Test Loop was used to simulate cooling water flows for materials handling tests performed at the

D Reactor. Approximately 45,000 gal of water is scheduled to be drained from the D Reactor Test Loop in FY 1994; one potential means of disposal of this wastewater involves processing at N Reactor.

### 2.1.3 Wastewater Sources Discharged to the 009 Outfall

Leaks that occur in nonradiologically contaminated areas from the potable water and fire systems are collected in floor drains and discharged to the Columbia River at the 009 Outfall. As discussed in Section 2.1.1, this flow is intermittent and of variable rate and volume.

Between 60 and 120 gal/min of cooling water from equipment and air conditioning units at the N Reactor are discharged to the Columbia River at the 009 Outfall.

Storm water runoff from roof drains from the 105-N, 109-N, and 184-N Buildings is currently discharged to the Columbia River at the 009 Outfall. The volume and rate of this discharge is both intermittent and variable. Based upon the normal rainfall at the Hanford Site and the intercepted area, an average of up to 1,600 gal/day (1.1 gal/min) of storm water is discharged via the 009 Outfall.

## 2.2 WASTEWATER CHARACTERIZATION

Characterization of wastewater discharges from the N Reactor is required to provide a basis for selecting treatment and disposal alternatives. Recent water quality analyses are available for the N Reactor wastewater, as described later in this section. The composition of future N Reactor wastewater discharges has been estimated using best professional judgement from data currently available, after accounting for the effects of the proposed changes.

### 2.2.1 Characterization Data Summary for Current Discharges to 1325-N Liquid Waste Disposal Facility

As a part of the Hanford Site-wide effort to characterize all major wastewater streams discharged to the soil column, the wastewater discharged to the 1325-N LWDF was extensively sampled between October 1989 and March 1990. Twenty-seven samples were collected and analyzed for volatile and semi-volatile organics, priority pollutant metals, and radionuclides (WHC 1990a). As a part of the 1990 sampling effort, sample data from the export (raw) water supply system were also reviewed and compared to the constituent concentrations observed in the N Reactor wastewater.

More recent data are available on the radionuclide content of the wastewater (WHC 1991b). Chemical data are also available from samples collected in February 1992 from the 105-N Lift Station, the 105-N Fuel Basin, the 109-N Sumps, and the 105-N Emergency Dump Basin. The 1992 chemical data indicate that, for most wastewater sources, constituent concentrations are similar to those reported in 1990. The recent radiochemical sample data

indicate a 3- to 28-fold increase in the concentrations of beta-emitting radionuclides in the wastewater versus those reported in 1990.

Recent data for ambient (background) Columbia River water quality are also available. During March and September 1991, samples of Columbia River water were collected near the Vernita Bridge, approximately 9 miles upstream from the N Reactor; these samples were analyzed for various water quality parameters (WHC 1992).

These data are summarized for chemical constituents and radionuclides in Tables 2-2 and 2-3, respectively.

### 2.2.2 Wastewater Characterization for Future Discharges

The anticipated discharges can be broken into two major categories; those associated with decontaminating and draining the 105-N Fuel Basin, and those associated with general radiation zone decontamination/reduction.

**2.2.2.1 Fuel Basin Decontamination and Draining.** A comparison of concentration data for key radionuclides in water samples collected from the 105-N Fuel Basin in 1991 and data from the 1990 1325-N LWDF characterization samples indicates that the 105-N Fuel Basin water contains radionuclide concentrations approximately an order of magnitude higher (and two orders of magnitude higher for tritium) than were present in the combined discharge to the 1325-N LWDF. Hardware removal and decontamination activities within the 105-N Fuel Basin area are anticipated to resuspend solids that have settled to the bottom of the basin, increasing the total suspended solids concentration.

**2.2.2.2 Radiation Zone Reduction and Decontamination Wastewater Sources.** Decontamination activities at the N Reactor are generally accomplished by washing down contaminated surfaces with water. The wastewater from this activity will be radiologically contaminated.

### 2.2.3 Constituent Sources

Specific sources for all constituents listed in Tables 2-2 and 2-3 are described in the following paragraphs.

Barium, calcium, chloride, fluoride, magnesium, potassium, silicon, sodium, (nonradioactive) strontium, and sulfate are all present in Columbia River water upstream of the N Reactor at concentrations on the order of those noted in 1325-N LWDF samples collected in 1990 (WHC 1990a, WHC 1992). Average concentrations of cadmium and nitrate for samples of the raw water system collected during the period from 1986 to 1989 are also very similar to those noted in the N Reactor effluent (WHC 1990a). Because the water used to supply the N Reactor potable water system treatment plant is essentially untreated Columbia River water, these constituents are likely to be present in the 1325-N LWDF wastewater due to their presence in the Columbia River. Additional aluminum, sulfate, and chloride may be contributed to the wastewater by the treatment process carried out at the filtration plant; here, the water is treated with alum (aluminum sulfate) and chlorinated to produce potable water.

## Table 2-2. Summary of N Reactor Effluent Sources Characterization Data.

| | 10/89 to 3/90 1325-N Average at 90% CI (c) (ug/L) | 9/91 Ambient Columbia River Characterization (d) | | February 1992 Sample Data (e) | | | | 1986 to 1987 Raw Water Average (ug/L) (c) |
|---|---|---|---|---|---|---|---|---|
| | | Avg (ug/L) | Max (ug/L) | 105-N Lift Station (ug/L) | 105-N Fuel Basin (ug/L) | 109-N Sumps (ug/L) | 1300-N Dump Basin (ug/L) | |
| **INORGANICS** | | | | | | | | |
| Ammonia (Total N) | 223 | 60 | 120 | <50 | <50 | <50 | 110.00 | |
| Ammonia | | | | | | | | |
| Ammonium | | | | | | | | |
| Aluminum | | 25.56(a) | 36.95 | 37.6(a) | 558.5 | ND | ND | |
| Antimony | | | | | | 14.1(a) | | |
| Arsenic | 13 | 1.2(a) | 2.8 | 3.8(a) | | 3.5(a) | | |
| Barium | 41 | 26.5(a) | 26.8 | 104(a) | 1720 | 17.5(a) | 35(a) | 26.00 |
| Boron | 83 | | | | | | | |
| Cadmium | 2 | | | | | | 2.85(a) | 2.40 |
| Calcium | 16700 | 16410 | 16550 | 16750 | 19700 | 16650 | 22750 | 18400 |
| Chloride | 1250 | 1980 | 2600 | | | | | 871 |
| Chromium | 6 | | | | | ND | | |
| Cobalt | | | | | 3.3(a) | | | |
| Copper | | | | 3.95(a) | 12.7(a) | 29.65 | | 10.6 |
| Fluoride | 204 | 100 | 100 | | | | | |
| Iron | 296 | 50.73(a) | 58.85 | 128 | 343 | ND | 178.50 | 63.60 |
| Lead | 39 | | | ND | ND | ND | ND | |
| Magnesium | 4330 | 3652(a) | 3695 | 3000(a) | 526(a) | 2480 | 6805 | 4190 |
| Manganese | 86.9 | 6.78(a) | 7.2 | 10.2(a) | 5.4(a) | ND | 7(a) | 9.80 |
| Mercury | | | | | | ND | | |
| Nickel | | 8.18(a) | 8.9 | | | ND | | 10.4 |
| Nitrate | 438 | | | | | | | 996 |
| Phosphorous | | 20 | 20 | | | | | |
| Potassium | 679 | 640.8(a) | 787 | 1590(a) | 769(a) | 3530(a) | 2315(a) | 795 |
| Selenium | 42 | | | | | | | |
| Silicon | 2040 | 1842 | 1875 | | | | | |
| Silver | 0.5 | | | ND | | | | |
| Sodium | 2030 | 1630 | 1710 | 19700 | 2175 | 16750 | 6200 | 2260 |
| Strontium | 87.3 | 82.98 | 83.5 | | | | | |
| Sulfate | 12100 | 9760 | 10000 | | | | | 10600 |
| Thallium | | | | ND | | | | |
| Uranium | 2.84 | 0.808(b) | | | | | | 0.73 |
| Vanadium | | 1.62(a) | 2.50(a) | | | 6.1(a) | | |
| Zinc | 12.1 | 5.75 | 10.95 | ND | 21.80 | ND | ND | 20.00 |
| Carbonate | | 800 | 2000 | | | | | |
| Bicarbonate | | 64400 | 67000 | | | | | |
| Alkalinity (as CaCO3) | 34500 | 54000 | 55000 | | | | | |
| **ORGANICS** | | | | | | | | |
| Acetone | 17 | | | ND | ND | ND | | |
| 1-butanol | 36 | | | | | | | |
| 2-butanone | 29 | | | | | | | |
| BHT | 14 | | | | | | | |
| Hydrazine | 31 | | | | | | | |
| Hexone (MIBK) | 10 | | | | | | | |
| Toluene | 5 | | | | | | 2 | |
| Trichloromethane | 5 | | | | 2 | | | 11.80 |
| Methylene Chloride | | 3.8(a) | 4.0(a) | ND | ND | ND | ND | |
| Tetrachloroethene | | | | | | 1 | | |
| Total Organic Carbon | 880 | 1680 | 1700 | | | | | 1360 |
| Total Carbon | 11900 | 14800 | 15000 | | | | | |
| Total Organic Halides | 24 | 108 | 150 | | | | | |
| **OTHER** | | | | | | | | |
| TDS | 47100 | 69400 | 78000 | | | | | |
| TSS | | 3000 | 3000 | | | | | |
| Temperature (deg C) | 18.5 | 18.6 | 18.8 | | | | | |
| Conductivity (uS) | 151 | 13 | 13 | | | | | |
| pH (Dimensionless) | 7.36 | 8.3 | 8.5 | | | | | 7.41 |
| Hardness (mg/L) | | 55 | 57.2 | | | | | |

a. Constituent detected in laboratory or field blank; effect unknown
b. Based upon uranium radioassay and specific activity for natural uranium
c. Concentrations were taken from the N Reator Effluent Stream-Specific Report. (WHC-EP-0342 Addendum 3)
d. Concentrations were taken from the Columbia River Characterization Data Report in Support of Hanford Project L-045. (WHC-SD-L045H-DP-002, Rev. 0).
e. Unpublished data

ND Constituent was not present at concentration 5x blank concentration

Table 2-3. Characterization Data Summary for N Reactor Effluent Radiochemical Constituents.

| | 1325-N LWDF 90% CI 10/89-3/90 (b) (pCi/L) | Average Columbia River 9/91 (c) (pCi/L) | Average 105-N Lift Station 3/91-6/91 (d) (pCi/L) | Average 105-N Basin 2/91-12/91 (d) (pCi/L) |
|---|---|---|---|---|
| Total Alpha | 4.99E+01 | 7.60E-01 | 2.86E+01 | 3.37E+02 |
| Total Beta | 1.65E+05 | 7.2E-01 | 2.07E+06 | 4.68E+06 |
| Am-241 | 7.03E+01 | | | |
| Cm-242 | 4.93E-01 | | | |
| Cm-244 | 8.92E-01 | | | |
| Co-60 | 7.00E+02 | | 6.06E+03 | 1.02E+04 |
| Cs-134 | 1.67E+02 | | 7.23E+02 | |
| Cs-137 | 4.71E+04 | | 1.83E+05 | 5.58E+05 |
| C-14 | 4.24E+00 | | | |
| H-3 | 1.98E+05 | 3.74E+02 | 5.59E+06 | 2.01E+07 |
| Mn-54 | 6.04E+02 | | | 9.54E+02 |
| Pb-210 | 2.97E+00 | | | |
| Pu-238 | 1.09E+01 | | 1.48E-01 | 9.57E+00 |
| Pu-239/240 | 6.66E+01 | 6.6E-02 | 8.68E-01 | 6.19E+01 |
| Radium | 3.30E-01 | 1.14E-01 | | |
| Ru-106 | 1.72E+03 | | | |
| Sr-90 | 1.76E+05 | 3.84E-01 | 6.55E+05 | 1.96E+06 |
| U-234 | 1.60E+00 | | | |
| U-235 | 2.17E-01 | | | |
| U-238 | 1.13E+00 | | | |
| Total Uranium (a) | 2.95E+00 | 5.50E-01 | | |

a. Concentration for 1325-N LWDF based upon sum of isotopics
b. Concentrations were taken from the N-Reactor Effluent Stream-Specific Report (WHC-EP-0342, Addendum 3)
c. Concentrations were taken from the Columbia River Characterization Data Report in Support of Hanford Project L-045H (WHC-SD-L045H-DP-002, Rev.0).
d. Unpublished Data

Trichloromethane concentrations found in the wastewater are consistent with those present in raw water, and may also be present in potable water due to chlorination (WHC 1990a). Facility personnel believe that the remaining organic constituents identified in the wastewater in 1990 are due to contamination of the samples, because many of the blank samples analyzed with the N Reactor wastewater were observed to be contaminated with common laboratory chemicals (WHC 1990a).

Iron, chromium, cobalt, manganese, uranium, nickel, vanadium, and zinc are likely to be present in the wastewater discharged to the 1325-N LWDF as residual materials from past operations or due to corrosion of steel piping and metal components in contact with the water supply and wastewater collection systems.

Hydrazine and ammonia were used at N Reactor as corrosion inhibitors for reactor coolant systems, and may be present in the samples collected during 1990 from this use. Ammonia is present in Columbia River water at approximately one-fourth the concentration noted in the 1990 samples of the 1325-N LWDF wastewater, and is still likely to be present in the wastewater due to its presence in the Columbia River. Hydrazine is highly reactive, and is not likely to be present in current discharges.

Radionuclides are present in the discharge due to residual contamination from past reactor operations. Recent increases in the concentrations of radionuclides in the wastewater from those reported in 1990 are believed to be primarily due to the decreased total wastewater flow to the 1325-N LWDF, resulting in reduced dilution of the contaminated wastewater from the remaining sources.

Specific sources have not been identified for antimony, arsenic, boron, copper, mercury, selenium, silver, and thallium. These compounds were not detected consistently in N Reactor wastewater samples, were detected at concentrations approaching instrument detection limits, or were also detected in laboratory or field blanks associated with the samples in question. Therefore, the actual presence of these constituents in the N Reactor wastewater is questionable. For the purpose of developing a conservative design basis for evaluating treatment systems for the N Reactor wastewater, these constituents have been retained in the assumed wastewater composition.

## 2.3 DESIGN BASIS WASTEWATER COMPOSITION

The design basis wastewater composition (or "design source term") developed for evaluating treatment alternatives for the N Reactor wastewater is described in the following sections. Two design bases are developed, one for wastewater sources that will be treated and discharged to the Columbia River, and one for wastewater sources that will be recycled. This distinction is discussed further in Section 4.

The design source term radionuclide concentrations have not been corrected for radioactive decay. Therefore, the assumed concentrations for short-lived radioisotopes (e.g., $^{242}Cm$, $^{210}Pb$, $^{106}Ru$) are generally higher than those anticipated in the later years of the wastewater treatment facility operating period.

Based upon the reactivity of hydrazine, and because no sources of new hydrazine additions currently exist at N Reactor, the design source term assumes that no hydrazine will be present in the wastewater.

### 2.3.1 Sources to be Treated and Discharged via the 009 Outfall

The design source term developed for wastewater sources that will be treated and discharged to the 009 Outfall assumes that the chemical constituent concentrations for discharges to the 1325-N LWDF are equal to the 90% confidence interval concentrations reported in the 1990 samples, or the values reported for the appropriate 1992 samples, whichever is highest. Radionuclide constituent concentrations are based upon recent sample data that suggest that most beta-emitting radionuclides are generally present at concentrations up to an order of magnitude greater than those measured in the 1990 samples. Tritium is present at concentrations nearly 28 times those measured in 1990. Assumed tritium concentrations are based upon average 105-N Lift Station sample data for the period between March and June 1991. Total suspended solids (TSS) concentrations and particle size distributions were assumed to be the same as those measured during 1986 pilot studies on the 1325-N LWDF discharge; these are the most recent data available for TSS.

In FY 1998, the majority of the wastewater discharged will be from the 105-N Fuel Basin. It has been assumed that the 105-N Fuel Basin will be drained in a manner that will minimize carryover of solids from the basin to the treatment system. Some carryover of solids is anticipated, however, resulting in increased concentrations of inorganics. In this one operating year, the average treated effluent composition is anticipated to be higher in aluminum, barium, boron, chromium, (nonradioactive) cobalt, copper, iron, nickel, selenium, silicon, uranium, zinc, (nonradioactive) strontium, and most radionuclides than that estimated using the design source term described above. The impact of this variation will be discussed in detail in Section 5.1.1.6.

It has been assumed that future decontamination water from areas outside the 105-N Fuel Basin will have the composition of the current 1325-N LWDF wastewater as described in Section 2.3.1.

The wastewater from the D Reactor test loop has been assumed to have the same composition as the current 1325-N LWDF wastewater for the purposes of this study; samples should be collected from the test loop and analyzed before determining the final disposition of this wastewater to ensure that this wastewater is compatible with any N Reactor wastewater management system.

The design source term for wastewater that will be treated and discharged to the Columbia River is summarized for chemical and physical characteristics in Table 2-4 and for radionuclides in Table 2-5.

### 2.3.2 Sources to be Recycled

The 105-N Fuel Basin decontamination wastewater constituent concentrations are assumed to be two orders of magnitude higher for tritium,

Table 2-4. Design Basis Concentrations for Chemical Constituents in N Reactor Wastewater.

| Chemical | Wastewater for Treatment and Discharge Constituent Concentrations | | | Wastewater for Recycle Constituent Concentrations | | |
|---|---|---|---|---|---|---|
| | (ug/L) | (Mol/L) | Basis | (ug/L) | (Mol/L) | Basis |
| **INORGANICS** | | | | | | |
| Ammonia (Total N) | 223.00 | 1.24E-05 | SSR | 223.00 | 1.24E-05 | SSR |
| Ammonia | 3.00 | 1.76E-07 | Calc'd | 3.00 | 1.76E-07 | Calc'd |
| Ammonium | 219.83 | 1.22E-05 | Calc'd | 219.83 | 1.22E-05 | Calc'd |
| Aluminum | 38.00 | 1.41E-06 | L | 5600.00 # | 2.07E-05 | 10xB |
| Antimony | 14.00 | 1.15E-07 | S | 0.00 | 0.00E+00 | B |
| Arsenic | 13.00 | 1.74E-07 | SSR | 0.00 | 0.00E+00 | B |
| Barium | 104.00 | 7.57E-07 | L | 1720.00 | 1.25E-05 | B |
| Boron | 83.40 | 7.72E-06 | SSR | 834.00 # | 7.72E-06 | 10xSSR |
| Cadmium | 3.00 | 2.67E-08 | D | 3.00 | 2.67E-08 | D |
| Calcium | 22750.00 | 5.67E-04 | D | 19700.00 | 4.91E-04 | B |
| Chloride | 2600.00 | 7.32E-05 | CR | 1250.00 | 3.52E-05 | SSR |
| Chromium | 6.00 | 1.15E-07 | SSR | 60.00 # | 1.15E-07 | 10xSSR |
| Cobalt | 0.00 | 0.00E+00 | L,S,D | 33.00 # | 5.59E-08 | 10xB |
| Copper | 30.00 | 4.72E-07 | S | 130.00 # | 2.05E-07 | 10xB |
| Fluoride | 204.00 | 7.26E-06 | SSR | 204.00 | 7.26E-06 | SSR |
| Iron | 179.00 | 3.21E-06 | D | 35000.00 # | 6.27E-05 | 10xB |
| Lead | 39.00 | 1.88E-07 | SSR | 39.00 | 1.88E-07 | SSR |
| Magnesium | 6805.00 | 2.80E-04 | D | 5260.00 # | 2.16E-05 | 10xB |
| Manganese | 86.90 | 1.58E-06 | SSR | 54.00 # | 9.84E-08 | 10xB |
| Nickel | 9.00 | 1.53E-07 | CR | 90.00 # | 1.53E-07 | 10xCR |
| Nitrate | 438.00 | 7.06E-03 | SSR | 438.00 | 7.06E-06 | SSR |
| Phosphorous | 20.00 | 6.46E-07 | CR | 20.00 | 6.46E-07 | CR |
| Potassium | 3530.00 | 9.03E-05 | S | 769.00 | 1.97E-05 | B |
| Selenium | 42.00 | 5.32E-07 | SSR | 420.00 # | 5.32E-07 | 10xSSR |
| Silicon | 2040.00 | 7.26E-05 | SSR | 20400.00 # | 7.26E-05 | 10xSSR |
| Silver | 0.50 | 4.63E-09 | SSR | 0.50 | 4.63E-09 | SSR |
| Sodium | 19700.00 | 8.57E-04 | L | 2175.00 | 9.46E-05 | B |
| Strontium | 87.30 | 9.97E-07 | SSR | 873.00 | 9.97E-06 | 10xSSR |
| Sulfate | 12100.00 | 1.26E-04 | SSR | 12100.00 | 1.26E-04 | SSR |
| Uranium | 2.84 | 1.19E-08 | SSR | 28.40 # | 1.19E-08 | 10xSSR |
| Vanadium | 6.10 | 1.20E-07 | S | 0.00 | 0.00E+00 | B |
| Zinc | 12.10 | 1.85E-07 | SSR | 218.00 # | 3.33E-07 | 10xB |
| Total Cations (meq/L) | 2.70 | | Calc'd | 1.41 | | Calc'd |
| Total Anions (meq/L)* | -0.49 | | Calc'd | -0.45 | | Calc'd |
| **OTHER** | | | | | | |
| Alkalinity (as CaCO3) | 110650.78 | 1.11E-03 | Est. | 48155.20 | 4.81E-04 | Est. |
| pH (Dimensionless) | 7.36 | | SSR | 7.36 | | SSR |
| Carbonate | 169.96 | 2.83E-06 | Calc'd | 73.95 | 1.23E-06 | Calc'd |
| Bicarbonate | 134688.52 | 2.21E-03 | Calc'd | 58602.47 | 9.61E-04 | Calc'd |
| TDS | -3000.00 | | Calc'd | -61314.66 | | Calc'd |
| TSS | 3000.00 | | CR | 61314.66 | | Est. |
| Temperature (deg C) | 18.50 | | SSR | 18.50 | | SSR |
| **ORGANICS** | | | | | | |
| Acetone | 17.30 | | SSR | 17.30 | | SSR |
| 1-butanol | 36.20 | | SSR | 36.20 | | SSR |
| 2-butanone | 29.10 | | SSR | 29.10 | | SSR |
| BHT | 13.50 | | SSR | 13.50 | | SSR |
| Hydrazine | 31.20 | | SSR | 31.20 | | SSR |
| Hexone (MIBK) | 10.30 | | SSR | 10.30 | | SSR |
| Toluene | 5.36 | | SSR | 5.36 | | SSR |
| Trichloromethane | 5.19 | | SSR | 5.19 | | SSR |
| Tetrachloroethene | 1.00 | | S | | | |
| Total Organic Carbon | 880.00 | | SSR | 880.00 | SSR | |
| Total Carbon | 11900.00 | | SSR | 11900.00 | SSR | |
| Total Organic Halides | 24.20 | | SSR | 24.20 | SSR | |

For Calculations

| | |
|---|---|
| K [NH4=>NH3] | 6.30E-10 |
| K [HCO3=>CO3] | 5.60E-11 |

* Does not include contribution from carbonate or bicarbonate.
\# Assume that 90% of this material is present in solids 100um and larger; molar concentrations are for dissolved fraction
SSR Stream Specific Report (1990) 90% confidence interval concentrations (WHC 1990a)
CR Columbia River ambient concentrations
L 105-N Lift Station Sample concentrations
S 109-N Sump sample concentrations
D Emergency Dump Basin sample concentrations
B 105-N Fuel Basin sample concentrations
Calc'd Calculated based upon other parameters
Est Estimated from the assumption that the solution charge is balanced by the carbonate and bicarbonate concentrations

Table 2-5. Design Basis Concentrations for Radiochemical Constituents in N Reactor Wastewater.

| Radionuclides | Wastewater for Treatment and Discharge Radionuclide Content (pCi/L) | Basis | Wastewater for Recycle Radionuclide Content* (pCi/L) | Basis |
|---|---|---|---|---|
| Total Alpha | 4.99E+01 | SSR | 4.99E+02 | 10xSSR |
| Total Beta | 1.65E+06 | 10xSSR | 1.65E+07 | 100xSSR |
| Am-241 | 7.03E+01 | SSR | 7.03E+02 | 10xSSR |
| Cm-242 | 4.93E-01 | SSR | 4.93E+00 | 10xSSR |
| Cm-244 | 8.92E-01 | SSR | 8.92E+00 | 10xSSR |
| Co-60 | 7.00E+03 | 10xSSR | 7.00E+04 | 100xSSR |
| Cs-134 | 1.67E+03 | 10xSSR | 1.67E+04 | 100xSSR |
| Cs-137 | 4.71E+05 | 10xSSR | 4.71E+06 | 100xSSR |
| C-14 | 4.24E+01 | 10xSSR | 4.24E+02 | 100xSSR |
| H-3 | 5.54E+06 | Env Smpl | 2.00E+07 | Basin Sample |
| Mn-54 | 6.04E+03 | 10xSSR | 6.04E+04 | 100xSSR |
| Pb-210 | 2.97E+01 | 10xSSR | 2.97E+02 | 100xSSR |
| Pu-238 | 1.09E+01 | SSR | 1.09E+02 | 10xSSR |
| Pu-239/240 | 6.66E+01 | SSR | 6.66E+02 | 10xSSR |
| Radium | 3.30E-01 | SSR | 3.30E+00 | 10xSSR |
| Ru-106 | 1.72E+04 | 10xSSR | 1.72E+05 | 100xSSR |
| Sr-90 | 1.76E+06 | 10xSSR | 1.76E+07 | 100xSSR |
| U-234 | 1.60E+00 | SSR | 1.60E+01 | 10xSSR |
| U-235 | 2.17E-01 | SSR | 2.17E+00 | 10xSSR |
| U-238 | 1.13E+00 | SSR | 1.13E+01 | 10xSSR |

* Assume increased concentration over that of wastewater for treatment and discharge is present in solids for all but H-3

SSR Stream Specific Report (1990) 90% confidence interval concentrations (WHC 1990a)

EnvSmpl Average concentration reported in unpublished results from routine samples of discharge to 1325-N LWDF during 1991

Basin Sample Average concentration reported in unpublished results from routine samples collected from 105-N Fuel Basin in 1991

and one order of magnitude higher for all other radionuclides, than those assumed for the current discharge to the 1325-N LWDF (Section 2.3.1). Most species are assumed to be present at concentrations equal to those assumed for the current 1325-N LWDF discharge, using the data described in Section 2.3.1. For antimony, arsenic, barium, calcium, potassium, sodium, and vanadium, data from 1992 samples of the 105-N Fuel Basin have been used instead. Key insoluble constituents (aluminum, boron, chromium, cobalt, copper, iron, magnesium, manganese, nickel, selenium, silicon, uranium, and zinc) were assumed to be present at concentrations an order of magnitude above those present in the aqueous fraction of the wastewater, to account for increased solids loading. The TSS concentrations in basin decontamination wastewater are assumed to be approximately 20 times those for the 1325-N LWDF discharge. It has been further assumed based upon previous operating experience that all of the increased contamination load over that in the 1325-N LWDF discharge will be present in suspended solids that are amenable to filtration, with the exception of tritium. No increase in organic species concentration was assumed.

These compositions are summarized in Table 2-4 for chemical and physical characteristics and Table 2-5 for radionuclides.

This page intentionally left blank.

# 3.0 WATER QUALITY STANDARDS

This section describes the receiving water for the proposed discharge, and presents the water quality standards that will apply at the discharge point.

## 3.1 OUTFALL LOCATION

Treated N Reactor effluent will be discharged through the existing 009 Outfall, located near river mile 379.5 at 46°40'32" North latitude by 119°34'12" West longitude, at a point approximately 350 ft west of the east bank of the river. This point of discharge is approximately 18 mi downstream from the Priest Rapids Dam; river conditions at this location are determined largely by operation of the Priest Rapids Dam. Releases from the dam are controlled by the Columbia River Regulation Section of the U.S. Army Corps of Engineers.

## 3.2 RIVER CHARACTERISTICS

### 3.2.1 River Flow

The river flow at the 009 Outfall varies seasonally in response to water runoff and daily in response to Corps of Engineers operating controls. The naturally occurring seasonal flow extremes are moderated by the Priest Rapids Dam. The high-flow extremes are a 100-yr flood of 440,000 $ft^3/s$ and a 10-yr flood of 330,000 $ft^3/s$. Seasonal high flows occur in winter and late spring (usually May), ranging between 50,000 and 250,000 $ft^3/s$ with an average flow of about 150,000 $ft^3/s$. The low-flow extreme is 36,000 $ft^3/s$, a minimum level established as part of the Lower Columbia River operating agreement for fishery protection. Seasonal low flows occur in late summer and fall (usually August), ranging between 36,000 and 150,000 $ft^3/s$, with an average flow of about 80,000 $ft^3/s$.

A daily flow variation is superimposed upon the seasonal flows. In the fall, the daytime flow is controlled to be as low as possible to minimize disturbances to fish spawning. The minimum flow is usually about 50,000 $ft^3/s$ but can drop to the target minimum low of 36,000 $ft^3/s$. At night, the flow increases to 140,000 $ft^3/s$. During the winter, the low flow is controlled at about 65,000 $ft^3/s$ in the day and increased to 140,000 $ft^3/s$ maximum at night. During the spring and early summer, the daily flow variations are not significant due to the high baseline flow rate caused by runoff.

### 3.2.2 River Topography

The river channel at the discharge point has a bottom elevation of approximately 355 ft National Geodetic Vertical Datum (NGVD). The river is approximately 1560 ft wide at this point at an elevation of 380 ft NGVD. River bottom contours in the vicinity of the 009 Outfall are depicted in Figures 3-1 and 3-2.

### 3.2.3 Ambient River Water Quality

The Columbia River is designated as a Class A River by Ecology under state water quality regulations, Chapter 173-201 of the Washington Administrative Code (WAC). Water quality in Class A rivers must meet or exceed all requirements for use as a drinking water supply, fish and wildlife habitat, recreation, stock watering, commerce, and navigation.

Samples of Columbia River water were collected in September 1991 at river mile 388, approximately 9 mi upstream from the 009 Outfall, and analyzed for constituents which may impact river water quality. The results of these samples are provided in Table 3-1; see Section 3.3.6 for further explanation of Table 3-1.

## 3.3 WATER QUALITY STANDARDS APPLICABLE TO THE TREATED N REACTOR EFFLUENT

Water quality standards, criteria, and guidance that may be applied to treated N Reactor effluent discharged to the Columbia River are discussed below. Effluent comparative levels for various constituents of concern present in the treated N Reactor effluent are developed based upon these standards.

### 3.3.1 Clean Water Act

Effluent limits have been set under the CWA for 50 industrial source categories and eight key priority pollutants, including polychlorinated biphenyls (PCB) and certain herbicides and pesticides. Part 423 of Title 40 of the Code of Federal Regulations (40 CFR 423) establishes effluent guidelines and standards for facilities "... primarily engaged in the generation of electricity for distribution and sale, which results primarily from a process utilizing ... nuclear fuel in conjunction with a thermal cycle employing the steam water system as the thermodynamic medium." Standards are established for "low-volume waste streams," including floor drains, and for "chemical metal cleaning wastes" and "metal cleaning wastes," which could include decontamination wastes.

Some of the source streams contributing to the N Reactor wastewater are similar to those covered by the 40 CFR 423 standard (e.g., those described in Sections 2.1.1.1 and 2.1.1.5). However, as the N Reactor was operated primarily for the production of special nuclear material, not electricity, this standard may not be wholly applicable. The standard may be considered

Figure 3-1. Columbia River Topography.

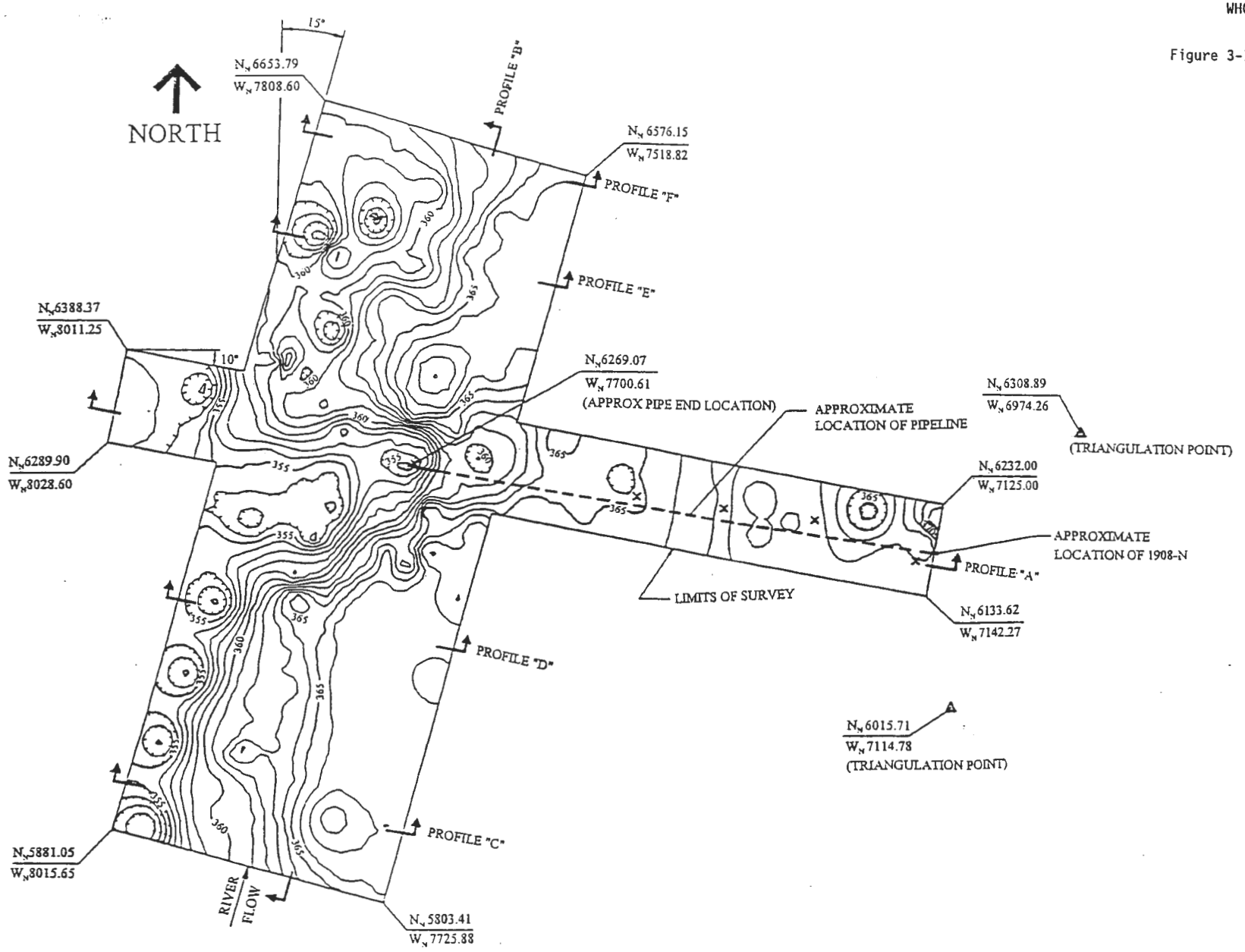

Figure 3-2. Columbia River Topography.

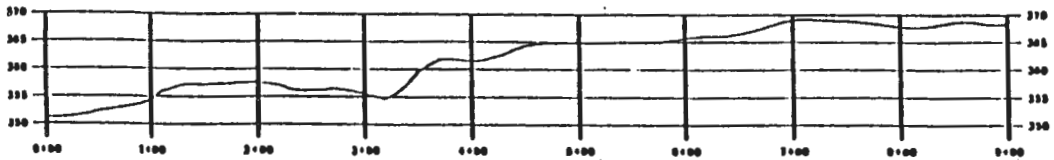

PROFILE "A" (LOOKING DOWNSTREAM)

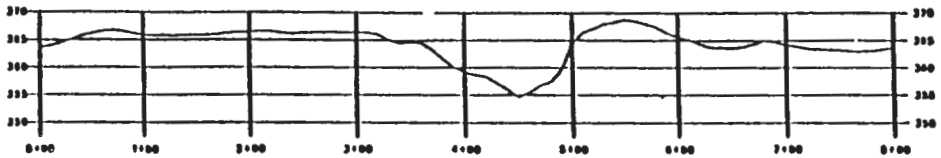

PROFILE "B" (LOOKING WEST)

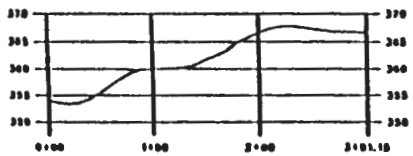

PROFILE "C" (LOOKING DOWNSTREAM)

PROFILE "D" (LOOKING DOWNSTREAM)

PROFILE "E" (LOOKING DOWNSTREAM)

PROFILE "F" (LOOKING DOWNSTREAM)

Table 3-1. Comparative Effluent Levels and Ambient Columbia River Concentrations.

| Chemical | Initial Influent (ug/L) | Columbia River Concentrations (ug/L) | Effluent Comparative Levels: Chronic Conc. (ug/L) | Chronic Source | Acute Conc. (ug/L) | Acute Source | Required DF |
|---|---|---|---|---|---|---|---|
| **INORGANICS** | | | | | | | |
| Ammonia (Total N) | 2.23E+02 | 6.00E+01 | 2.00E+03 | a,i | 1.65E+04 | a,h | |
| Aluminum | 3.80E+01 | 2.56E+01 | 5.00E+01 | d | | | |
| Antimony | 1.40E+01 | | 1.60E+03 | b | 9.00E+03 | b | |
| Arsenic | 1.30E+01 | 1.20E+00 | 1.90E+02 | b | 3.60E+02 | b | |
| Barium | 1.04E+02 | 2.65E+01 | 1.00E+03 | b | | | |
| Boron | 8.34E+01 | | | | | | |
| Cadmium | 3.00E+00 | | 7.59E-01 | a,i | 2.20E+00 | a,h | 3.95 |
| Calcium | 2.28E+04 | 1.64E+04 | | | | | |
| Chloride | 2.60E+03 | 1.98E+03 | 2.50E+05 | d | | | |
| Chromium | 6.00E+00 | | 1.10E+01 | a,i | 1.60E+01 | a,h | |
| Cobalt | 0.00E+00 | | | | | | |
| Copper | 3.00E+01 | | 7.64E+00 | a,i | 1.10E+01 | a,h | 3.93 |
| Fluoride | 2.04E+02 | 1.00E+02 | 4.00E+03 | c | | | |
| Iron | 1.79E+02 | 5.07E+01 | 1.00E+03 | b | | | |
| Lead | 3.90E+01 | | 1.66E+00 | a,i | 4.26E+01 | a,h | 23.49 |
| Magnesium | 6.81E+03 | 3.65E+03 | | | | | |
| Manganese | 8.69E+01 | 6.78E+00 | 5.00E+01 | b | | | 1.74 |
| Nickel | 9.00E+00 | 8.18E+00 | 1.02E+02 | a | 9.21E+02 | a,h | |
| Nitrate | 4.38E+02 | | 1.00E+04 | b | | | |
| Phosphorous | 2.00E+01 | 2.00E+01 | | | | | |
| Potassium | 3.53E+03 | 6.41E+02 | | | | | |
| Selenium | 4.20E+01 | | 3.50E+01 | a,i | 2.60E+02 | a,f | 1.20 |
| Silicon | 2.04E+03 | 1.84E+03 | | | | | |
| Silver | 5.00E-01 | | 1.20E-01 | b | 1.69E+00 | a,f | 4.17 |
| Sodium | 1.97E+04 | 1.63E+03 | | | | | |
| Strontium | 8.73E+01 | 8.30E+01 | | | | | |
| Sulfate | 1.21E+04 | 9.76E+03 | 2.50E+05 | d | | | |
| Uranium | 2.84E+00 | 8.08E-01 | | | | | |
| Vanadium | 6.10E+00 | 1.62E+00 | | | | | |
| Zinc | 1.21E+01 | 5.75E+00 | 6.88E+01 | a,i | 7.59E+01 | a,h | |
| **ORGANICS** | | | | | | | |
| Acetone | 1.73E+01 | | | | | | |
| 1-butanol | 3.62E+01 | | | | | | |
| 2-butanone | 2.91E+01 | | | | | | |
| BHT | 1.35E+01 | | | | | | |
| Hydrazine | 3.12E+01 | | | | | | |
| Hexone (MIBK) | 1.03E+01 | | | | | | |
| Toluene | 5.36E+00 | | 1.43E+04 | b | 1.75E+04 | b | |
| Trichloromethane | 5.19E+00 | | 1.24E+03 | b | 2.89E+04 | b | |
| Tetrachloroethene | 1.00E+00 | | 8.40E+02 | b | 5.28E+03 | b | |
| **RADIONUCLIDES** | (pCi/L) | (pCi/L) | (pCi/L) | | | | |
| Total Alpha | 4.99E+01 | 7.60E-01 | | | | | |
| Total Beta | 1.65E+06 | 9.60E-01 | | | | | |
| Am-241 | 7.03E+01 | | 3.00E+01 | e | | | 2.34 |
| Cm-242 | 4.93E-01 | | 1.00E+03 | e | | | |
| Cm-244 | 8.92E-01 | | 6.00E+01 | e | | | |
| Co-60 | 7.00E+03 | | 1.00E+04 | e | | | |
| Cs-134 | 1.67E+03 | | 2.00E+03 | e | | | |
| Cs-137 | 4.71E+05 | | 3.00E+03 | e | | | 157.00 |
| C-14 | 4.24E+01 | | 7.00E+04 | e | | | |
| H-3 | 5.54E+06 | 3.74E+02 | 2.00E+06 | e | | | 2.77 |
| Mn-54 | 6.04E+03 | | 5.00E+04 | e | | | |
| Pb-210 | 2.97E+01 | | 3.00E+01 | e | | | |
| Pu-238 | 1.09E+01 | 1.32E-01 | 4.00E+01 | e | | | |
| Pu-239/240 | 6.66E+01 | 7.00E-02 | 3.00E+01 | e | | | 2.22 |
| Radium | 3.30E-01 | 1.42E-01 | 1.00E+02 | e | | | |
| Ru-106 | 1.72E+04 | | 6.00E+03 | e | | | 2.87 |
| Sr-90 | 1.76E+06 | 3.84E-01 | 1.00E+03 | e | | | 1760.00 |
| U-234 | 1.60E+00 | | 5.00E+02 | e | | | |
| U-235 | 2.17E-01 | | 6.00E+02 | e | | | |
| U-238 | 1.13E+00 | | 6.00E+02 | e | | | |

a. Values reported are specifically listed in WAC 173-201-047 or were calculated using equations as defined in WAC 173-201-047. Equation inputs for the Columbia River were: pH=7.41, Temperature=16.4 C, Hardness=60 mg/L as CaCO3, and Salmonids present.
b. EPA Gold Book
c. 40 CFR 141 Primary Drinking Water Standards
d. 40 CFR 143 Secondary Drinking Water Standards
e. DOE Order 5400.5 Radiation Protection of the Public and the Environment
f. An instantaneous concentreation not to be exceeded any time.
g. A 24 hour average not to be exceeded.
h. A 1-hour average concentration not to be exceeded more than once every three years.
i. A 4-day average concentration not to be exceeded more than once every three years.

along with other water quality guidelines and standards in establishing effluent comparative levels for evaluating potential treatment systems for the N Reactor wastewater.

### 3.3.2 Radiation Exposure Limits

For DOE defense production facilities, DOE Order 5400.5 establishes a public exposure limit of 100 millirem per year (mrem/yr) from all facility sources via all exposure pathways, with limits of 10 mrem/yr for exposure to airborne releases and 4 mrem/yr for exposure through consumption of drinking water (DOE 1990). To implement these exposure-based limits, the order establishes ambient derived concentration guidelines (DCG) for releases to surface water and groundwater, with 1 DCG being the annual average concentration needed to exceed the 100 mrem/yr limit, assuming that the only exposure pathway is through drinking water, and assuming that 730 L/yr of contaminated drinking water is consumed.

The order sets DOE policy with respect to the treatment of wastewater discharges, establishing 1 DCG as the screening level that triggers evaluation of potential treatment technologies for the wastewater discharge via the BAT process. The order also requires that treatment be consistent with DOE As Low As Reasonably Achievable (ALARA) policy. As such, the application of the DOE BAT process to wastewater streams may result in an additional level of control, as well as contribute to the overall ALARA program at the Hanford Site.

### 3.3.3 Drinking Water Standards

Both Ecology and EPA use drinking water standards to determine the potential for adverse impacts that could be caused by wastewater discharges to surface water. The Washington State Department of Health has promulgated drinking water standards in Chapter 248-54 WAC, "Public Water Supplies." Federal drinking water standards appear in 40 CFR 141 and 143. Drinking water standards considered in this report include the following.

- Maximum contaminant levels (MCL) established for toxics and carcinogens are to be set at nontoxic levels, and as close as possible to MCLGs, with some allowance for economic and technical factors.

- Secondary maximum contaminant levels (SMCL) established primarily on the basis of secondary water effects such as color, odor, and taste are generally set for compounds that are not considered to be toxic or carcinogenic to humans.

### 3.3.4 Ambient Surface Water Quality Standards

Ecology and EPA have developed ambient surface water quality criteria (WQC) designed to prevent adverse effects to aquatic organisms and to humans who may be consuming aquatic organisms or surface water. Ecology has promulgated surface water regulations pursuant to Chapter 90.48 of the Revised

Code of Washington (RCW), *Water Pollution Control Act* (WPCA). The EPA has established WQC (although not yet promulgated in regulations) pursuant to its authority under the CWA. The focus of these standards and criteria is to define ambient levels of chemical concentrations that are not expected to pose adverse effects if present in the aquatic environment.

Federal surface water criteria are established in EPA program guidance documents, principally *Quality Criteria for Water*, commonly known as the Gold Book (EPA 1986). Ecology has generally adopted the Gold Book criteria into its regulations, either directly or by reference. Ecology regulations are currently found in Chapter 173-201 WAC, "Water Quality Standards for Surface Waters of the State of Washington."

**3.3.4.1 Protection of Aquatic Life.** One goal of the ambient surface water standards is the protection of aquatic species from direct toxic effects. Toxicity is addressed in terms of acute (short-term) and chronic (long-term) effects.

Many of the acute and chronic toxicity criteria are based on lowest observed effects levels (LOEL) for sensitive aquatic species. In some cases, the LOEL or the species of interest may not be pertinent to a particular surface water body. In addition, some of the criteria depend on temperature, hardness, or pH. The derivation of particular toxicity criteria may affect their relevance to a specific discharge scenario.

**3.3.4.2 Protection of Human Health.** A second goal of the surface water standards is the protection of human health. Criteria are established for organism consumption only, where the water does not also serve as a source of drinking water (e.g., marine or estuarine waters). Criteria also exist for consumption of organisms and water, where the surface water is used as a drinking water source. The latter criteria are typically more restrictive, because it assumes an additional route of exposure to chemical compounds.

Human consumption criteria may also reflect certain factors related to the tendency of some compounds (typically carcinogens) to accumulate and/or bioconcentrate in aquatic species before consumption. Thus, the EPA Gold Book lists a range of criteria reflecting 1 in 100,000; 1 in 1,000,000; and 1 in 10,000,000 incremental human cancer risk from consuming affected aquatic organisms, or organisms and water. The 1 in 1,000,000 risk criteria have been used where appropriate to establish effluent comparative levels for this report.

### 3.3.5 Effluent Guidelines Summary

Table 3-1 presents effluent comparative levels that were derived for the treated N Reactor effluent. All effluent comparative levels for radionuclides are based upon DCGs published in DOE Order 5400.5. For chemical constituents, effluent comparative levels were developed using the following guidelines and criteria:

- Chronic ambient surface WQC for freshwater species and human consumption of water and organisms from the EPA Gold Book and Chapter 173-201 WAC

- Federal MCLs for drinking water
- Federal SMCLs for drinking water.

In all cases, the WQC from the Gold Book and Chapter 173-201 WAC were consulted first to determine the appropriate effluent comparative level. If no WQC had been established, MCLs and SMCLs were used to establish the appropriate effluent comparative level. If no WQC, MCL, or SMCL has been established, then no effluent comparative level has been listed for the compound. Acute WQC are provided in Table 3-1 for comparison to treated effluent concentrations.

Values are also shown in Table 3-1 for the estimated influent concentrations for the N Reactor wastewater and the resulting decontamination factors (DF) required to meet the effluent comparative levels. The DF for any given contaminant and treatment unit operation or treatment train is defined as the ratio of the influent concentration to the effluent concentration.

Based upon the effluent comparative levels presented in Table 3-1 and the estimated wastewater constituent concentrations developed in Section 2, treatment will likely be required to reduce concentrations of the following influent constituents before discharge to the Columbia River:

- Organics
- Inorganics (as dissolved and suspended solids)
- Radionuclides (as dissolved and suspended solids).

This page intentionally left blank.

# 4.0 WASTEWATER TREATMENT ALTERNATIVES ANALYSIS

Federal regulations require that BAT be applied to all surface water discharges permitted under the NPDES. The DOE has established a procedure for determining the BAT to be used in managing wastewater streams at the Hanford Site (WHC 1988). As applied to any specific stream or combination of streams, the procedure incorporates the flexibility necessary to support determination of BAT without limitation as to the variety or concentrations of individual contaminant species.

## 4.1 THE BEST AVAILABLE TECHNOLOGY PROCESS

The BAT evaluation process employs a five-step, hierarchical approach. Figure 4-1 outlines that approach.

The first step in the BAT evaluation process involves wastewater characterization. It begins with assembling all relevant liquid effluent data. The second step in the BAT evaluation process involves the identification of applicable effluent guidelines (e.g., 40 CFR 423). Sections 1 through 3 of this report describe how these steps were completed for the N Reactor wastewater.

If a BAT determination is not possible from the effluent guidelines method, then it may be possible to establish BAT using the technology transfer method. Technology transfer requires full-scale technology applications to be in place and effectively treating wastewater similar to the subject wastewater. Such technologies may be suitable for transfer to the Hanford Site application.

If transferable technologies do not exist, treatability studies conducted on similar wastes may provide a sufficient basis for selecting the technology as BAT.

For most Hanford Site wastewater streams, BAT is determined by the final step, which involves developing and comparing generic source control and treatment alternatives. Source controls include both administrative and equipment changes that reduce waste stream flows and/or contaminant loadings without treating the waste stream; examples include substituting nontoxic chemicals for toxic chemicals, capping drains, and installing new equipment that reduces or eliminates stream flows.

The DOE process has been used to evaluate treatment technologies which might be applied to the N Reactor wastewater. The results of this evaluation are documented in Appendix F. It has been determined that, while federal effluent guidelines and treatment systems for similar wastewater discharges provide supporting data that will aid in the selection of BAT for the N Reactor wastewater, they are not by themselves sufficient to establish BAT. Therefore, the generic treatment system method has been used to select BAT for this wastewater.

Figure 4-1. Best Available Technology Determination Process.

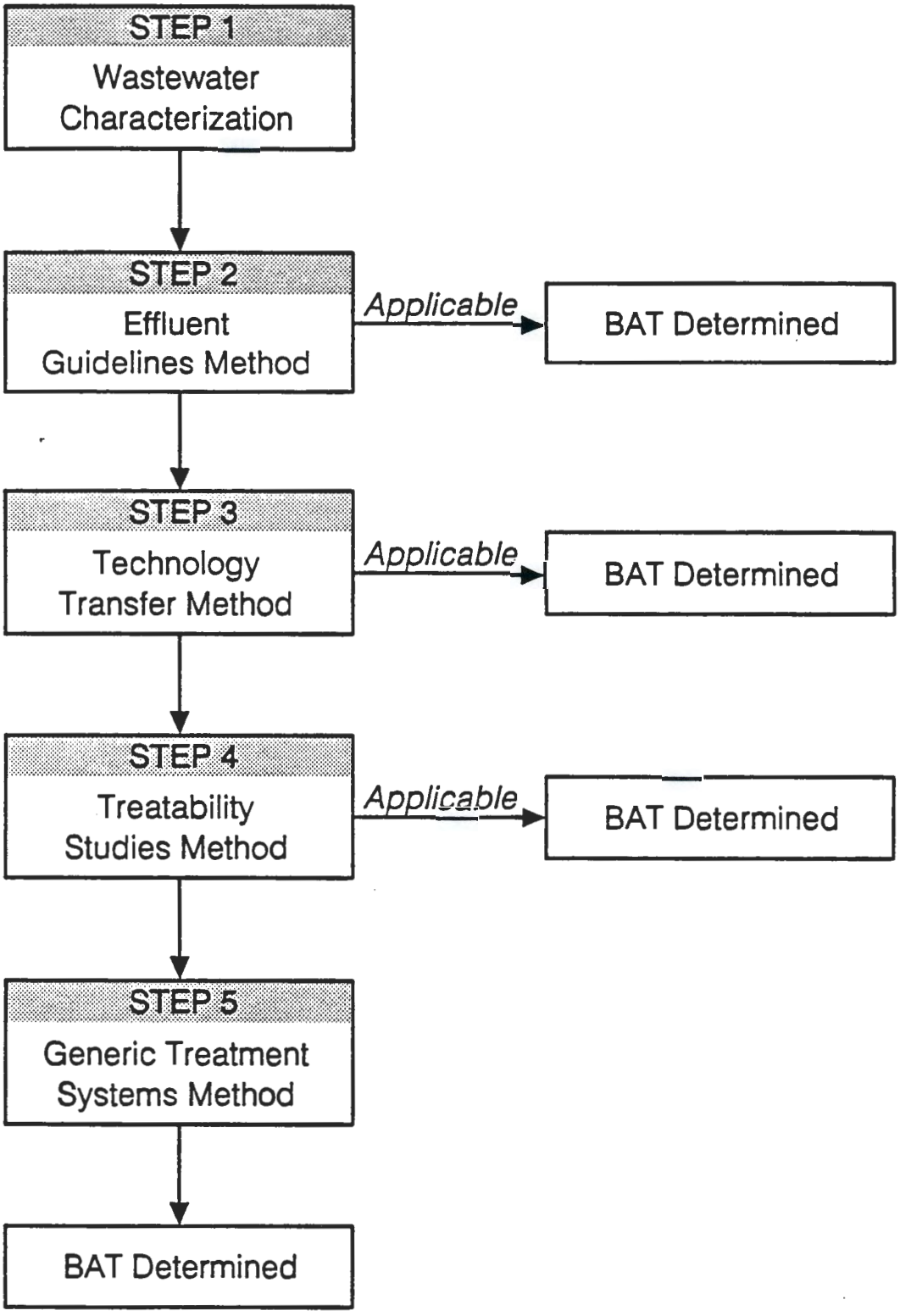

## 4.2 TECHNOLOGY SCREENING

During the evaluation described in Appendix F, a large array of alternatives for treating the subject wastewater were identified. The technologies include source controls as well as treatment processes with the potential for removing suspended solids, organics, and dissolved solids from the wastewater. To qualify for further consideration, these technologies, individually or in combination within an integrated system, must satisfy the following general criteria.

- **Effectiveness**--Treatment technologies must have the potential to meet effluent comparative levels identified in Table 3-1.
- **Implementability**--Treatment technologies and treatment systems are assessed in terms of maintenance and reliability constraints, safety and ALARA considerations, and process development status.
- **Cost**--Treatment systems are evaluated based on both installed equipment and operating costs.

Acceptable wastewater treatment technologies, individually or in combination within an integrated system, must also be able to effectively treat the various categories of constituents expected in the wastewater. There are two routes to effective treatment. The first route consists of physical, chemical, and thermal conversion of harmful substances to a benign state. The second route consists of the capture and concentration of harmful substances into a waste stream that is disposed of separately from the wastewater, supplemented with secondary waste treatment as necessary to achieve the degree of stability required for safe disposal of the secondary waste. The wastewater is expected to contain the following types of constituents:

- Inorganics and radionuclides as suspended solids
- Inorganics and radionuclides as dissolved solids
- Organics.

Table 4-1 presents a matrix of the technologies considered, along with other alternatives including source control and no action. The table indicates the type of target constituents each technology might be expected to treat. Many of the technologies are also somewhat effective in treating constituents other than those shown.

For clarity, the technologies are listed individually in Table 4-1. However, most cases would require a combination of two or more compatible technologies to effectively treat the full range of constituents in the wastewater. Each of the technologies in the matrix was evaluated within the context of the three criteria (effectiveness, implementability, and cost) to reduce the list to only those suitable for the current application.

Sections 4.2.1 through 4.2.3 present generalized descriptions of the technologies. The descriptions include rationales for retaining or eliminating particular technologies from further consideration.

Table 4-1. Potential Wastewater Treatment Technologies.

| Treatment technology | Target contaminant category | | |
|---|---|---|---|
| | Suspended solids | Organics | Dissolved solids |
| No action | | | |
| Source treatment source control | • | • | • |
| End-of-pipe treatments suspended solids removal | | | |
| Coagulation/flocculation | • | | |
| Sedimentation/Clarification | • | | |
| Bag filtration | • | | |
| Deep bed filtration | • | | |
| Cartridge filtration | • | | |
| Microfiltration | • | | |
| Ultrafiltration | • | | |
| Organics removal | | | |
| Activated carbon adsorption | | • | |
| Biological treatment | | • | |
| Supercritical fluid extraction | | • | |
| Air stripping | | • | |
| UV/Oxidation | | • | |
| Pervaporation | | • | |
| Dissolved solids removal | | | |
| Evaporation | | | • |
| Vacuum-freezing | • | | • |
| Chemical precipitation | | | • |
| Ion exchange | | | • |
| Reverse osmosis | | | • |
| Electrodialysis | | | • |
| Alumina adsorption | | | • |
| Algae adsorption | | | • |
| Supported liquid membrane | | | • |

• = Effectively removed by the treatment technology.

### 4.2.1 No Action

The objective of applying BAT is to reduce constituent concentrations contained in the N Reactor wastewater to levels consistent with guidelines developed from relevant effluent comparative levels. Examination of the wastewater characteristics indicate that treatment is necessary to achieve that objective. Treatment technologies have been identified and are available to implement the objective. Therefore, no action is an unacceptable alternative.

### 4.2.2 Source Control

In support of a best management practices (BMP) approach, Westinghouse Hanford Company (Westinghouse Hanford) has instituted a program of physical and administrative source controls and waste minimization to reduce the volume of the N Reactor wastewater. These controls, coupled with the reduced operational status of the N Reactor, decreased the average wastewater flow to the 1325-N LWDF from nearly 1,600 gal/min in 1987 to approximately 100,000 gal/yr (0.02 gal/min) currently. At current flow rates, water is not being routinely discharged to the 1325-N LWDF, but is accumulated in the 105-N Lift Station and 109-N Sumps until sufficient volumes are reached to warrant pumping the wastewater to the 1325-N LWDF. Waste minimization and further source controls remain appropriate for consideration in relation to the N Reactor wastewater discharge, particularly for projected future sources of wastewater, and should be considered as a part of any treatment system.

**4.2.2.1 Source Control by Wastewater Recycle.** Decontamination operations in and around the 105-N Fuel Basin area are the source of approximately one-half of the wastewater that is anticipated to be generated during N Reactor shutdown between FY 1994 and 1999. The 105-N Fuel Basin area currently has a water treatment and recycle system that was previously used to maintain water clarity in the fuel basin. Portions of this system may be modified to support the recycle of decontamination water. The objective of decontamination in the 105-N Fuel Basin area is to reduce contamination on hardware and equipment through hydraulic action before packaging for disposal. High-purity water supplies are not required for this activity. Therefore, recycling decontamination wastewater back to the 105-N Fuel Basin area for reuse, following some minimal level of treatment to reduce radiation exposures to the workers performing decontamination activities, appears to be a feasible source-control option. The recycle of 105-N Fuel Basin decontamination wastewater has been incorporated into each of the alternatives examined for this report.

Assuming that 105-N Fuel Basin decontamination water is recycled, an average of approximately 480,000 gal/yr of wastewater will still be generated. This wastewater will be generated through decontamination activities in other areas of the 105-N and 109-N Buildings, and from miscellaneous sources including piping leaks and rainwater intrusion.

Distribution systems for recycling radiologically contaminated water to various locations within the 105-N and 109-N Buildings do not exist and would be difficult and expensive to install. Therefore, recycling wastewater generated by general building decontamination activities is not a feasible alternative.

**4.2.2.2 Source Control by Maintenance Activities.** The total amount of wastewater that could be eliminated through maintenance activities such as repairing facility roofs and miscellaneous leaks within the 105-N and 109-N Buildings could range up to 100,000 gal/yr. Wastewater treatment costs are anticipated to range between $1/gal to $5/gal for this low-flow stream. This cost would be nearly equally split between capital investment costs and annual operating costs. Due to the low flow rate and total volumes of wastewater anticipated, these source controls are not likely to lead to a reduction in the required capacity or cost of treatment equipment. However, a

reduction in operating costs may be realized. For example, up to $1.5 million of operating expenses could be eliminated by reducing flows up to 100,000 gal/yr through corrective and preventive maintenance performed before FY 1994. However, these source controls will not eliminate the need to treat and dispose of wastewater generated at N Reactor.

**4.2.2.3 Source Control Summary.** For purposes of evaluating treatment technologies for the N Reactor wastewater, it has been assumed that decontamination wastewater from the 105-N Fuel Basin area will be recycled. An average of 480,000 gal/yr of wastewater from the remaining N Reactor sources that would normally discharge to the 1325-N LWDF will be treated and disposed.

### 4.2.3 End-of-Pipe Treatments

The following sections describe end-of-pipe treatment technologies for all constituents of concern identified in Table 3-1. These technologies are grouped according to the type of contaminant removed. The contaminant types include inorganics and radionuclides as suspended solids; organics; and inorganics and radionuclides as dissolved solids.

Tritium is present in the wastewater as water. Tritium cannot be separated from the wastewater matrix by common chemical or physical techniques. No demonstrated, cost-effective technology currently exists to remove tritium from wastewater.

#### 4.2.3.1 Suspended Solids Removal.

**4.2.3.1.1 Sedimentation/Clarification.** Sedimentation/clarification is the application of gravitational force to remove suspended particles from a fluid. The rate at which solids settle is affected by the size, shape, particle density, and fluid density. Types of sedimentation/clarification equipment include sedimentation basins and inclined-plate separators. Coagulants and flocculants are often added to the waste stream to increase the particle size and sedimentation rate. Following sedimentation/clarification, collected solids can be further dewatered using a drying bed, filtration, or centrifugation.

Typical sedimentation/clarification DFs are lower than those for other candidate technologies when used to treat wastewaters with relatively low concentrations of small suspended solids. Therefore, sedimentation/clarification will not be considered further for this application.

**4.2.3.1.2 Bag Filtration.** Bag filtration is commonly used to remove particles as small as 1 $\mu$m. Bag filtration units consist of fabric bags supported by strainer baskets that are housed within rigid casings. Fabric bags can degrade in the presence of certain organics, so materials must be selected carefully. The strainer basket and rigid housing must also be made of carefully selected materials. Bag filters are more prone to failure than are rigid cartridge filter media and require a high degree of contact maintenance. Therefore, this alternative will not be considered further.

**4.2.3.1.3 Deep Bed Filtration.** Deep bed filters may contain one or more sizes of filter media such as sand and pulverized coal. The media are layered in a vertical cylinder through which wastewater flows in a downward direction. Particulates collect on the upper surface of the filter media. The collected solids are removed by back-flushing. Usually multiple deep bed filters are provided to allow for continuous operation. Deep bed filters are most attractive for treating wastewaters containing relatively high concentrations of large (1-5 μm and larger) particles. Therefore, this alternative will not be considered further due to the low levels of suspended solids in the N Reactor wastewater that will be treated for discharge to the Columbia River.

Sand filters, a type of deep bed filter, have proven effective in the past for removing suspended solids from N Reactor fuel basin water. Therefore, this technology will be retained for use in treating decontamination wastewater for recycle.

**4.2.3.1.4 Disposable Cartridge Filtration.** Cartridge filters are used to remove particles ranging in size from submicron to 40 μm from fluids containing 0.01% solids or less. Disposable cartridge filters can be constructed of a variety of materials including paper, cloth, and polypropylene. This type of filtration is typically operated with the feed pumped through the cartridges until they are loaded with solids and the pressure differential exceeds operating specifications. The cartridges then are removed to be cleaned or disposed. The high level of contact maintenance required for disposal of cartridge filters operated in batch mode preclude their use for the N Reactor effluent. Therefore, this alternative will not be considered further.

**4.2.3.1.5 Microfiltration.** Microfiltration is used to remove solid particles in the size range of 0.1 to 10 μm (1,000 to 100,000 Å). The technology uses elevated pressure to drive liquid waste through a membrane matrix containing extremely fine pores that trap particulates. The pH and organic content of the liquid stream must be compatible with the membrane material to prevent plugging or physical damage. Membrane materials are typically polymeric but can also be ceramic or sintered metal.

Microfiltration is often a semicontinuous operation in which trapped particles are periodically removed by back-flushing the filter membrane with the filtration unit offline. Alternatively, microfilters can be used in recirculation/cross-flow operation. A recirculation loop includes a reservoir tank, a recirculation pump, and the filter modules. The recirculation feature maintains a high velocity across the filter face to prolong on-stream time by avoiding accumulation of solids at the surface. A small portion of the recirculation flow is bled off to maintain a constant solids concentration as feed water is added. Thus, extended filter life is obtained, but with higher pumping costs.

Microfiltration has proven effective in treating N Reactor wastewater during pilot studies conducted at N Reactor in 1988. Due to the low levels of contact maintenance required, the expected particle size distribution, and the demonstrated effectiveness of this technology in removing radionuclides from the N Reactor wastewater, microfiltration will be evaluated further.

**4.2.3.1.6 Ultrafiltration.** Ultrafiltration is similar to microfiltration except that it addresses particles in a size range from 0.001 to 0.1 μm (10 to 1,000 Å). There are similar design constraints on materials of construction. The membranes consist of a very thin skin supported on a spongy sublayer of membrane material. Like microfiltration, ultrafilters are usually operated in a recirculation cross-flow mode. The recirculation feature maintains a high velocity across the filter membranes to prolong on-stream time by avoiding solids accumulation at the membrane surfaces. Because the particle size distribution in the N Reactor wastewater is expected to range from 1.5 to 49 μm, this technology will not be considered further.

**4.2.3.2 Organics Removal.**

**4.2.3.2.1 Activated Carbon Adsorption.** Activated carbon is widely used to adsorb organics contained in aqueous feed streams. Activated carbon is most effective when employed to adsorb relatively high-molecular-weight hydrocarbons that exhibit low solubility in aqueous solution. Activated carbon is not as effective in adsorbing some organics such as small halogenated hydrocarbons and acetone. The adsorption process, however, is relatively nonselective and is commonly used as a broad-spectrum treatment method. Two forms of activated carbon, granulated and powdered, can be used.

Granulated activated carbon (GAC) is typically used in flow-through columns, while powdered activated carbon (PAC) is used in well-mixed slurry reaction vessels. Some organics may exhibit a chromatographic effect after adsorption on GAC in which one adsorbed compound is displaced by another. Activated carbon adsorption is retained for further consideration due to its broad-spectrum applicability and standard use in wastewater and hazardous waste treatment.

**4.2.3.2.2 Biological Treatment.** The use of biological processes is becoming more common in removing undesirable organics from wastewater streams. Specific organisms can be cultivated to target specific organic compounds. A given system often requires pH adjustment, nutrient additions, and precise temperature control. The low carbon concentrations in the N Reactor wastewater would require that substantial carbon sources be added to sustain a viable microbial population. In addition, biological treatment systems normally require prolonged startup periods until steady state treatment levels are achieved, and are sensitive to transients in both influent flow and concentration. These operating characteristics reduce the effectiveness and reliability of biological treatment units for systems with noncontinuous or highly variable flows. Due to these considerations, biological treatment will be eliminated from further consideration.

**4.2.3.2.3 Supercritical Fluid Extraction.** Supercritical fluid extraction is an emerging technology for removing organics from wastewater using fluids that possess unique physical characteristics. The fluid (typically carbon dioxide) is obtained by compressing a gas to its critical point where it begins to behave as a liquid with the capacity for dissolving large quantities of organics. However, the fluid continues to exhibit some gaseous properties, including the ability to extract organics at an extremely high rate compared with the rates normally observed for liquid-liquid extraction. This technology is just emerging and cannot be considered to be

commercially demonstrated for wastewater treatment. The high pressures required for this technology present additional safety concerns. Therefore, this alternative will be eliminated from further consideration.

**4.2.3.2.4 Air Stripping.** Air stripping may be used to remove low concentrations of volatile materials from wastewater. Air stripping towers are typically operated with counter-current flow of the air and water. The effectiveness of stripping is a function of the Henry's Law constant for a given constituent. A material with a Henry's Law constant of greater than 0.003 atm $m^3$/mole can generally be treated economically by air stripping.

Air stripping is potentially a cost-effective treatment for toluene, trichloromethane, and tetrachloroethene, as all of these constituents have Henry's constants greater than 0.003 atm $m^3$/mole at ambient temperatures. Ammonia is also easily treated by air stripping. Increasing the temperature of the influent wastewater can improve air stripping performance (increases in air temperature will have less of an effect) for the remaining organic compounds. Steam stripping, where steam is used instead of a air, is required for cost-effective removal of acetone. The energy input necessary to heat the influent wastewater or produce steam is likely to reduce the cost effectiveness of this technology. Steam stripping of a highly soluble compound like acetone generally results in a secondary waste in the form of a condensate containing high concentrations of organics, which will require additional treatment before disposal.

Offgas from the air stripper must be treated to comply with state and federal air quality regulations; treatment technologies that are commonly employed to treat the offgas are carbon adsorption and oxidation (e.g., fume incineration). Both of these technologies can be directly applied to the wastewater as well, with the added advantage that more of the less volatile organics present in the wastewater may be removed by direct treatment of the wastewater. Therefore, air stripping will not be considered further for this application.

**4.2.3.2.5 Ultraviolet-Light/Ozone/Peroxide Oxidation.** Ultraviolet (UV)-catalyzed oxidation is an organic destruction process that uses the tendency of hydrocarbons to absorb light within the UV spectrum. The hydrocarbons are activated and become more susceptible to oxidation. The oxidant is typically provided in the form of ozone, hydrogen peroxide, or a mixture of the two. This process requires 1 to 30 min of residence time to effect near-complete oxidation. Residence time depends on contaminant type and concentration. Additionally, the energy input in the form of UV light required to enhance oxidation is strongly dependent upon contaminant type. Aromatic and other unsaturated hydrocarbons are more easily oxidized by this process than are saturated or halogenated organics. The equipment operates at room temperature and nominal pressure under continuous water flow conditions. UV/ozone/peroxide oxidation requires only monitoring of lamp activity/ cleanliness and oxidant flows. Because the technology is relatively expensive and aggressive organic treatment does not appear to be warranted for this stream, UV-catalyzed oxidation has not been considered further for this application.

**4.2.3.2.6 Pervaporation.** Pervaporation is a membrane-based process that uses a vacuum to increase the membrane flux for organic wastewater

constituents. The wastewater is directed across the upstream side of the membrane at ambient pressure and a slightly elevated temperature of 50 °C to 90 °C. The vapor-phase permeate is withdrawn by maintaining a slight vacuum on the downstream side of the membrane. Membranes are used that have a high selectivity for the organic compounds over water. Pervaporation cannot be considered a demonstrated process at this time and will be eliminated from further consideration.

**4.2.3.3 Dissolved Solids Removal.**

**4.2.3.3.1 Coagulation/Flocculation.** Coagulation and flocculation can be used to enhance the removal of metals and particulates from wastewater. Coagulating agents act to neutralize charges and collapse colloidal particles causing them to agglomerate or flocculate and settle. Common coagulants include aluminum sulfate (alum), ferric chloride, and ferric sulfate. In addition to these inorganic materials, polyelectrolytes can be used to flocculate colloidal particles. Polyelectrolytes are polymers of large, water-soluble organic molecules that react with particles to form flocs.

Typical coagulation/flocculation DFs are lower that those for other candidate dissolved solids removal technologies. Therefore, coagulation/flocculation will not be considered further for this application.

**4.2.3.3.2 Evaporation.** This option is commonly used to reduce the volume of radioactive effluents; it is also effective in removing suspended and dissolved solids. Evaporators commonly use elevated temperature and/or reduced pressure to evaporate water. Various methods can be used to provide the heat. Steam can be used directly or indirectly through heating coils. The mechanical vapor recompression (MVR) evaporator is a thermally efficient design in which a compressor is used to compress the evaporated vapor and pass it through a heat exchanger to transfer energy to the incoming water. The use of the compressor results in a high thermal efficiency and nearly eliminates the need for any energy input other than the compressor power after startup. Mechanical vapor recompression evaporation will be retained for primary wastewater treatment.

**4.2.3.3.3 Vacuum-Freezing Multiple-Phase Transformation.** Vacuum-freezing is a separation technique that uses freezing point differences and the unique properties of ice to remove organics and dissolved solids from water.

Partial freezing of wastewater produces a solid fraction consisting of pure ice. The remaining liquid contains the original impurities, but in a concentrated form. The ice crystals are removed and melted into relatively pure water (plus whatever brine adheres to the surface of the crystals after washing the ice) using the heat of condensation of the vapors produced in the initial vaporization step.

In a primary refrigerant mode, cold wastewater containing contaminants of low volatility is sprayed into a vacuum chamber at a pressure slightly below the vapor pressure of water at its freezing point so that simultaneous vaporization and freezing of the water occurs in an adiabatic (constant total heat content) mode. A sub-triple-point vapor and a slurry containing ice (water) crystals and a concentrated brine results. The low pressure flash

vaporizes a fraction of the feed water, and the heat of vaporization removed from the running liquid causes ice crystals to form. About one-half of the feed remaining liquid is frozen.

The resulting mixture is transferred to the bottom of a separation column. The ice floats to the top of the column, and the brine is drawn off the side at selected points. Vapor leaving the freezer is condensed in an auxiliary refrigeration system and is admitted to the top of the separation column to wash brine from the ice crystals.

Because of the complexity of this technology, and lack of demonstrated experience in concentrating similar waste streams, it will be eliminated from further consideration as both a primary treatment method and a method for secondary waste concentration.

**4.2.3.3.4 Chemical Precipitation.** Dissolved solids can be removed from solution by adding a chemical agent that reduces the solubility of the target constituent and causes a precipitate to form. Chemical precipitation is a common method for removing metals from wastewater. Removal of dissolved metals usually involves adjusting the solution within a range of pH 8 to pH 11 to form insoluble hydroxides. Typical additives include sodium hydroxide, magnesium hydroxide, and hydrated lime. Many metals can also be precipitated using sodium sulfide or sodium bisulfide.

The precipitated solids are typically removed by sedimentation and filtration. Various coagulants and flocculants are often added to assist in forming large, dense particles that settle rapidly and are easily filterable.

Many variations of precipitation processes can be used to target specific constituents. One variation is a co-precipitation process. Co-precipitation can be accomplished by adjusting the solution pH between 2 and 4 to make a ferrous sulfate additive soluble. The ferrous sulfate is added and the mixture is agitated. The pH is readjusted via addition of hydrated lime [$Ca(OH)_2$] or sodium hydroxide. Iron then precipitates as an oxyhydroxide (FeOOH). Some contaminants are adsorbed on the FeOOH, some co-precipitate with the oxyhydroxide, and some precipitate as hydroxides. Microfiltration or clarification can be used to separate the resulting solids. Other precipitation processes combine sulfide precipitation in a basic (pH 10) solution with microfiltration using filter media with ion-exchange (IX) properties.

For relatively dilute aqueous streams such as the N Reactor wastewater, chemical precipitation is not as effective at removing dissolved solids as other commonly applied technologies. Therefore, chemical precipitation will not be considered further for this application.

**4.2.3.3.5 Ion Exchange.** Ion exchange removes ions from an aqueous phase by displacing complementary ions from exchange sites located on the surface of an insoluble support material. The support materials are typically synthetic organic resins. The complementary ions are composed of specific functional groups that are selectively displaced by ions in the solution. In cation resins, the exchange sites usually contain hydrogen ions but may also be

designed and operated to contain sodium or ammonium ions. In anion resins, the exchange sites usually contain hydroxide ions, but other ions, such as chloride, can be used.

Upon depletion of the available complementary ions, the resins are either removed for disposal and replaced with fresh resin or they are regenerated. Regeneration involves displacing contaminant ions with fresh, complementary ions to restore the exchange capacity of the resin. In conventional applications, cation or anion resins are typically regenerated by washing with sulfuric acid or sodium hydroxide solutions, respectively. Conventional regeneration usually generates secondary waste volumes up to 5% of the original flow rate.

Prerequisites for using IX may include pretreatment to remove suspended solids and organics. Both of those contaminants can mask the exchange sites, resulting in loss of exchange efficiency, or plug the resin bed, resulting in restricted flow through the unit. Ion exchange is a standard water treatment technology for both radionuclides and more conventional toxic pollutants and should be effective in removing dissolved solids from the N Reactor wastewater. Additionally, disposal of the resin bed versus regeneration may be a potential option, reducing the amount of secondary wastes generated. Therefore, IX will be retained for further evaluation.

**4.2.3.3.6 Reverse Osmosis.** Reverse osmosis (RO) is a physical unit process that removes dissolved constituents from an aqueous solution and concentrates them. The process involves filtering the contaminated solution through a semi-permeable membrane at a pressure greater than the osmotic pressure exerted by the dissolved constituents in the wastewater. Relatively pure water passes through the membrane while most of the impurities do not.

An RO unit produces two streams from the original feed stream. The first is permeate that consists of relatively pure water. The second is concentrate that contains impurities that did not pass through the membrane. To achieve enhanced concentration of the removed contaminants, applications may employ two or more RO stages operating in series. In such applications, the permeate streams are combined for discharge while the feed stream to each of the latter stages consists of concentrate produced in the previous stage. In a given RO stage, the fraction of the total feed water appearing in the permeate stream is primarily a function of the operating pressure upstream of the membrane which, in turn, is established by the design criteria for the desired level of contaminant removal.

Either several stages of RO in series or multiple passes through a single stage in a semi-batch process could be applied to enhance the removal of dissolved solids from the N Reactor wastewater. Colloidal and organic matter tend to foul RO membrane surfaces, causing significant deterioration in the rate of water throughput. Therefore, RO may require pretreatment steps, including filtration and organic removal. Secondary waste volumes typically range from 10 to 20% of the original flow rate.

Reverse osmosis is generally not as effective as other technologies commonly applied to low-volume, dilute waste streams such as the N Reactor wastewater. Additionally, RO generates substantial quantities of secondary wastes. Therefore, RO will not be considered further for this application.

**4.2.3.3.7 Electrodialysis.** Ion selective membranes in a direct-current electrical field are used in electrodialysis to separate ionic species in a fluid. In comparison to RO, electrodialysis can result in reject streams which are significantly more concentrated. However, leakage to the permeate is greater with electrodialysis, resulting in a "dirtier" product stream. As electrodialysis does not offer significant advantages over RO in this application, it will not be evaluated further.

**4.2.3.3.8 Alumina Adsorption.** Activated alumina is used to adsorb ions from the wastewater as the water passes through a packed column. The alumina can be regenerated by rinsing with basic and acidic solutions such as sodium hydroxide and nitric acid, respectively. Anions of arsenic are often adsorbed using activated alumina. Activated alumina will not be considered further because there are other broader-spectrum separation methods available for treating N Reactor wastewater.

**4.2.3.3.9 Algae Adsorption.** Dried algae can be formed into beads for use as a chemical sorbent. Sorbed species are removed by adjusting the solution pH. This medium has been shown to be quite effective for sorbing certain heavy metals, including uranium. Its applications involve concentrating weak solutions of specific metal ions to facilitate further processing of the solution. Careful control of pH during sorption is required. Algae adsorption was eliminated from further consideration because its treatment functions are achieved by other, more-proven technologies.

**4.2.3.3.10 Supported Liquid Membrane.** Supported liquid membrane (SLM) is an emerging technology with the potential for removing and concentrating dilute contaminants from an aqueous feed stream. An SLM consists of an organic extractant held by capillary forces within the pores of a microporous membrane. The feed solution is flushed across one side of the membrane. The organic solvent extracts solute from the feed. Concurrently, a stripping solution is flushed across the other side of the membrane to remove the solute from the organic solvent.

Applied to the N Reactor wastewater, an SLM unit would be configured with multiple types of membranes in series to effectively remove both cations and anions. The process would be expected to generate a relatively small volume of secondary waste comprised of a flushing solution carrying the removed impurities. Filtration and organic removal are necessary pretreatment steps to avoid plugging or blinding the membranes. The technology cannot be considered commercially demonstrated at this time. Therefore, it will be eliminated from further consideration.

### 4.2.4 Summary of Technology Screening

Based on the results of the technology screening, the following source controls and treatment technologies were retained for further evaluation:

- Recycling of fuel basin decontamination water
- Deep bed filtration treatment
- Microfiltration treatment

- Granulated activated carbon treatment
- Evaporation treatment
- Ion exchange treatment.

## 4.3 BEST AVAILABLE TECHNOLOGY PROCESS EVALUATION

The selected technologies were combined into three candidate treatment systems for further evaluation and comparison. Each of the candidate systems addresses the three categories of constituents of concern (suspended solids, organics, dissolved solids) in the N Reactor wastewater. Each relies on filtration to remove suspended solids and on IX to remove at least a portion of the dissolved solids.

### 4.3.1 Description of the Alternatives

Each of the candidate systems would be located in the existing 107-N Building, which is not currently in use. This building was previously used to treat water from the 105-N Fuel Basins for recycle and contains much of the support equipment (e.g., chemical and secondary waste storage tanks) needed to treat the N Reactor wastewater. The current IX system installed in the 107-N Building has been sized for a flow rate orders of magnitude greater than that needed for N Reactor wastewater treatment; therefore, this system will be replaced with an appropriately sized IX system. The existing sand filters can be used to treat recycled decontamination wastewater, and will be retained for that purpose.

The following treatment alternatives will be considered:

- Alternative A--Microfiltration, evaporation, IX, and GAC adsorption
- Alternative B--Microfiltration, IX, and GAC adsorption (preferred alternative)
- Alternative C--Microfiltration and IX.

For each treatment system, a design flow rate of 10 gal/min and a maximum flow rate of 20 gal/min were assumed. Portions of the new IX system will be reused to treat basin decontamination water for recycle; during these periods they will operate at flow rates approaching the maximum of 20 gal/min. These design flow rates allow all wastewater to be treated in the peak generating years of FY 1997 and 1998 at operating efficiencies of 81% and 91%, respectively, assuming an 8-hour-per-day, 5-day-per-week operation.

The treatment systems are designed to operate in a campaign mode, with wastewater from the 105-N and 109-N Buildings accumulating in the 105-N Lift Station until a sufficient volume of wastewater has been collected to allow processing. Wastewater will be pumped from the 105-N Lift Station to the 107-N Building, where the treatment system will be located. The 105-N Lift Station is a concrete sump with a steel liner, sized to hold up to 100,000 gal of wastewater. The 105-N Lift Station is generally operated at a maximum

depth of 14 ft (the top of the steel liner), that equates to a volume of approximately 54,000 gal. Each treatment system also incorporates two holding tanks with a working volume of 15,000 gal each to allow treated effluent to be monitored and sampled.

The treatment technologies that will be considered for the N Reactor wastewater all generate secondary wastes that must be disposed of. The secondary wastes will be radioactive, and possibly subject to the Washington State Dangerous Waste Regulations due to the concentrations of toxic characteristic metals present. Secondary wastes which could be generated are listed below:

- Evaporator bottoms
- Filter sludges
- Spent IX resins or IX regeneration solutions
- Spent GAC.

Options for handling these secondary wastes include both stabilization at N Reactor and shipment to other Hanford Site facilities in an unstabilized form for further processing. Secondary waste management will be discussed in greater detail in Section 4.3.3.

The following subsections discuss each of the N Reactor wastewater treatment alternatives. Because of the similarity of the processes, the discussion of alternatives is in some cases limited to the differences between the alternatives.

**4.3.1.1 N Reactor Wastewater Treatment Alternative A.** Alternative A is comprised of four treatment unit operations: microfiltration, evaporation, IX, and GAC adsorption. The process train, including ancillary equipment, is shown in Figure 4-2.

Wastewater will be pumped from the 105-N Lift Station to the 107-N Building at a nominal flow rate of 10 gal/min, with flows as high as 20 gal/min. A filter is the first treatment component. The purpose of the filter is to remove particles 1 $\mu m$ and larger. In addition to removing the particles, the filter may also remove some of the heavy metals that are adsorbed to the particles. There are several viable options for filters in this application. The selected option uses a tubular filter element constructed of sintered ceramic or metal particles. These filters capture solids on the surface of the filter element while allowing water and dissolved matter to pass through. This type of filter can be back-flushed in place to avoid producing waste filters typical of conventional cartridge filtration.

To enhance solids removal, both a precoat and body feed will be used. Before filtering any N Reactor wastewater, a precoat slurry of filter aid (such as diatomaceous earth) in clean water will be run through the filter, building up a porous cake that enhances the performance of the filter element. Approximately 0.1 to 0.2 $lb/ft^2$ of precoat per unit of filter area will be used. This precoat will also be applied to the filter element following each filter back-flush.

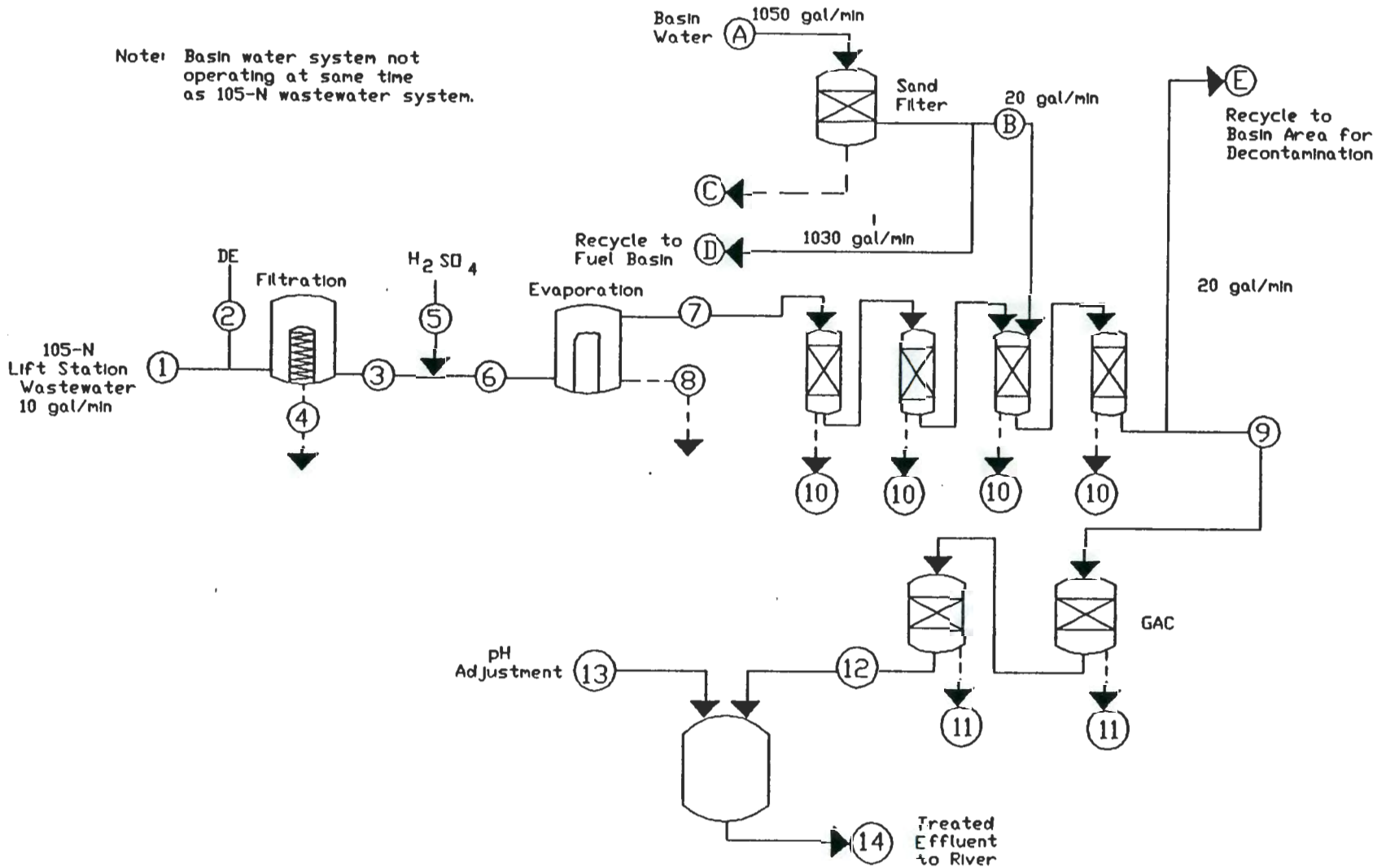


Figure 4-2. Alternative A Flow Schematic.

Filter aid will also be metered into the incoming N Reactor wastewater stream as body feed to enhance filtration. Body feed will be used at a concentration of 2 to 10 ppm filter aid in the wastewater flowing to the filter.

The filter will be back-flushed regularly to remove solids that collect on the filter elements. The back-flushing will be automatic, based on measured pressure drops across the filter. Based on an assumed waste stream flow of 480,000 gal/yr at an operating flow rate of 10 gal/min, the assumed stream constituents, 100 N Area Liquid Effluent Treatment Facility (LETF) pilot test data, and vendor information, a microfilter with an area of 58.2 $ft^2$ will need to be back-flushed every 130 operating hours, or about six times per year.

Evaporation is the second treatment unit. A vertical tube, falling film MVR evaporator will be used to remove dissolved solids from the filtered wastewater, achieving a total DF of 1000. The evaporator bottoms will have a total solids concentration of approximately 5.0% by weight. The majority of the volatile organic constituents will remain in the overheads of the evaporator. The evaporator will use a seed slurry to help control scale deposits, which are prevalent due to the high proportion of calcium and sulfate ions present in the wastewater. Scale deposits will form on the seed slurry instead of the heat transfer surfaces and exit the evaporator with the waste slurry. Sulfuric acid will also be added to the influent to the evaporator to help reduce scaling by lowering the pH to about 5.5. This converts the bicarbonates to carbon dioxide, which will then be stripped from solution by the evaporator deaerator.

The evaporator will be designed for a maximum flow rate of 20 gal/min, and will operate at a turndown rate of 50% of the maximum flow rate. At the design flow rate, waste slurry will be produced at a rate of approximately 5 lb/h with a solids concentration of 5% by weight. This evaporator will require approximately 400 lb/h steam from an outside source, such as a steam boiler, for up to 24 h during startup. For continuous operation for periods longer than 24 h, recompressed overhead vapor will be used instead of steam as a heat source.

Distillate from the evaporator will be pumped to the IX system to further reduce its dissolved solids content. Two sets of IX columns are used in series, each with a strong acid cation and a weak base anion exchange bed. The strong acid IX column will contain 13 $ft^3$ of resin, and the weak base column will contain 11 $ft^3$ of resin. Conductivity and radioactivity will be used to measure breakthrough of an operating column. Assuming that resins will not be regenerated and estimating reported typical resin capacities, approximately 0.3 $ft^3$ of strong acid resin and 0.1 $ft^3$ will be expended to treat 480,000 gal of N Reactor evaporator overhead.

Effluent from the IX system will be pumped through GAC canisters to remove organic compounds. Two canisters will be used in series. For this alternative, pressure-flow canisters containing 35 $ft^3$ (approximately 1050 lb) of GAC each were assumed. Water quality will be monitored at the discharge from each vessel to detect breakthrough of the target compounds. When breakthrough occurs in the first vessel, the GAC will be removed hydraulically and replaced with fresh GAC. The flow will then be switched to direct water

through the second vessel first and the vessel with the fresh GAC second. This alternation will be continued throughout the operation. Based on the stream flow, stream constituents, and vendor information, each canister will need to be replaced every 470 operating hours. Approximately two canisters of GAC will be needed to treat 480,000 gal of N Reactor wastewater per year.

Treated effluent from the GAC system will be discharged to one of the two effluent holding tanks, where pH adjustment and sampling will be performed prior to discharge to the river.

**4.3.1.2 N Reactor Wastewater Treatment Alternative B.** Alternative B is similar to Alternative A, in that filtration, GAC adsorption, and IX will be used to remove radionuclides, organics, and suspended and dissolved solids. The difference between Alternatives A and B is that Alternative A will utilize an evaporator for dissolved solids removal, while Alternative B will rely upon additional stages of IX to accomplish an equivalent level of treatment. Figure 4-3 is a diagram of the Alternative B process train.

In Alternative B, effluent from the filter will enter an expanded IX system, consisting of four pairs of cation and anion exchange columns operated in series. As in Alternative A, a strong acid cation and weak base anion column will be used for each pair. Assuming that resins will not be regenerated and using reported typical resin capacities, approximately 256 $ft^3$ of strong acid resin and 47 $ft^3$ of weak base resin will be expended to treat 480,000 gal of filtered N Reactor wastewater. Effluent from the IX system will be treated using GAC, pH adjusted, sampled, and discharged as described for Alternative A.

**4.3.1.3 Alternative C.** Alternative C is identical to Alternative B, except that no provision has been made for organics removal. Alternative C consists solely of filtration followed by IX. Figure 4-4 is a flow diagram for the Alternative C process train.

**4.3.1.4 Recycle of Decontamination Wastewater.** For all of the N Reactor wastewater treatment alternatives described above, wastewater from decontamination activities in the 105-N Fuel Basin area will be treated and recycled for reuse in the fuel basin area.

Decontamination wastewater will be routed to the 107-N Building for treatment using the existing pumps and piping that connect the 105-N Fuel Basin area to the 107-N Building. During decontamination activities, water will be withdrawn from the fuel basin at a rate of up to 1050 gal/min.

The water will first pass through one of two existing sand filters to remove suspended solids. The online sand filter will be operated until a set differential pressure across the filter media is reached, at which time the flow will be diverted to the standby filter and the now offline filter will be back-flushed. Based upon previous operation of the sand filter while treating recirculated fuel basin water, it is estimated that approximately 1 gal of sludge will be generated by the sand filter for every 19,157 gal of water processed. Approximately 25.2 Mgal of water will be processed through the sand filter on an annual average basis.

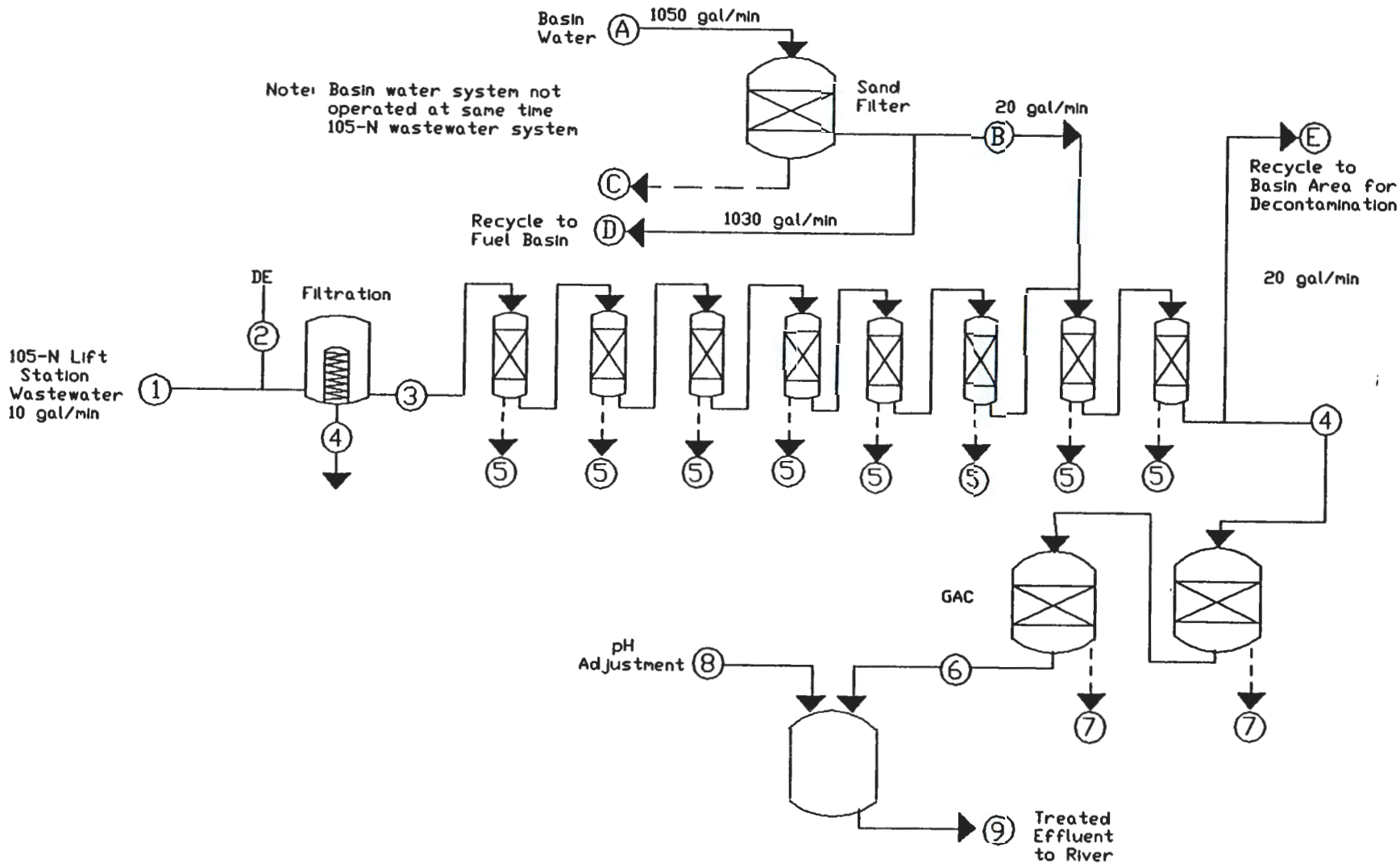


Figure 4-3. Alternative B Flow Schematic.

Figure 4-4. Alternative C Flow Schematic.

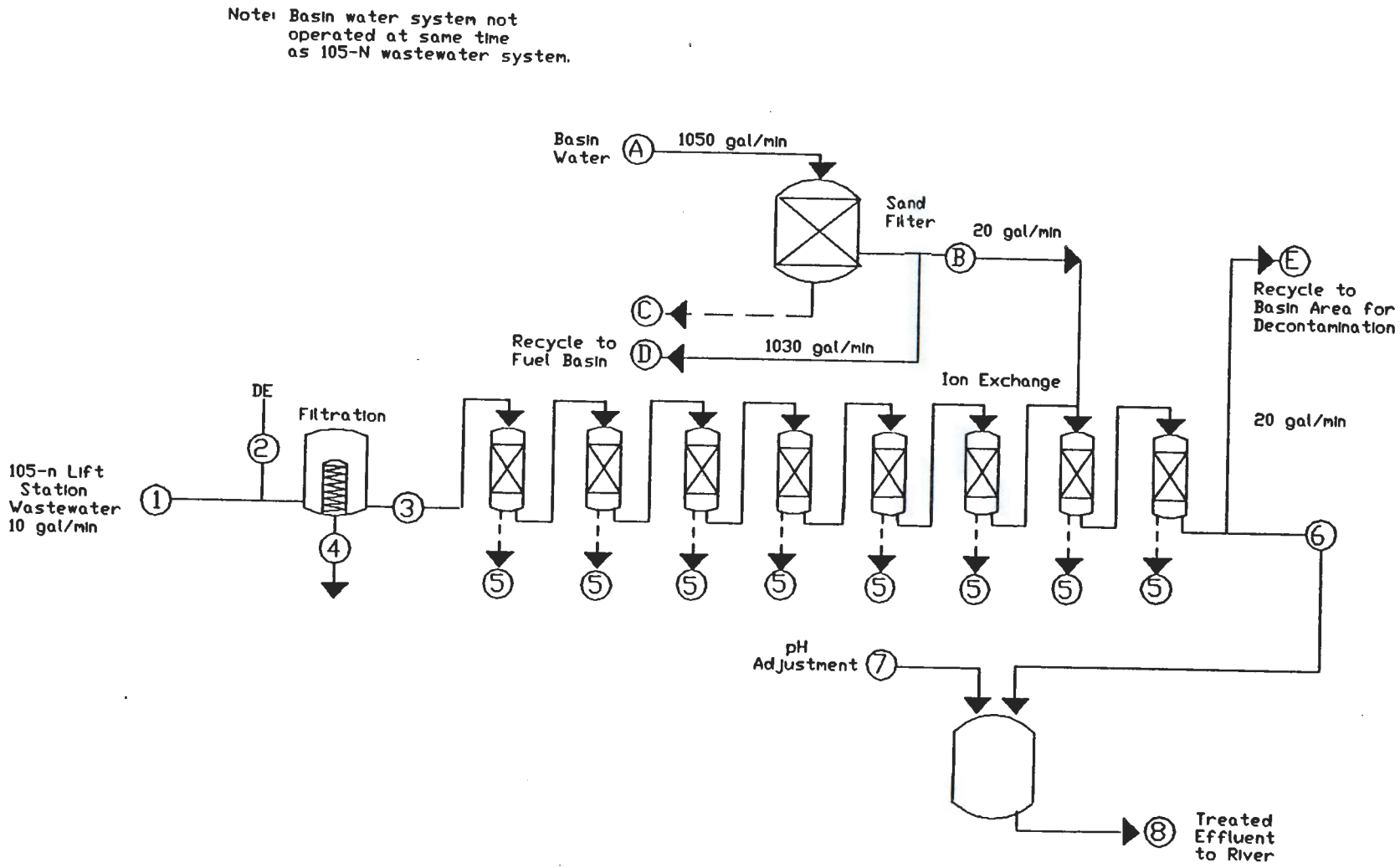

After filtration, the majority of the water (approximately 24.7 Mgal/yr) will be returned to the 105-N Fuel Basin with no further treatment using an existing piping system to help maintain water clarity. Approximately 20 gal/min of recycled water (or an assumed 480,000 gal/yr) will also be treated by IX to further reduce its radionuclide content, and then returned to the fuel basin area for reuse in decontamination.

One set of IX columns from the N Reactor wastewater treatment system will be used, with a strong acid cation and a weak base anion exchange bed in series. The strong acid IX column will contain 13 $ft^3$ of resin, and the weak base column will contain 11 $ft^3$ of resin. Conductivity and radioactivity are typically used to measure breakthrough of an operating column. When treating recycled decontamination wastewater, the strong acid resin will be expended at a rate of approximately $2.8 \times 10^{-4}$ $ft^3$/gal, and the weak base resin at a rate of approximately $1.2 \times 10^{-4}$ $ft^3$/gal. On average, approximately 134 $ft^3$/yr of strong acid resin and 60 $ft^3$/yr of weak base resin will be required to treat recycled decontamination water, assuming that resins will not be regenerated and given reported typical resin capacities.

Treated water will be routed back to the 105-N Fuel Basin area via new underground piping. Wastewater from decontamination activities will flow to the fuel basin, from which it will be recycled as described above.

### 4.3.2 Evaluation Criteria

The criteria that will be used to evaluate the three N Reactor wastewater treatment alternatives and their associated weighting factors are listed in Table 4-2. Each of the criteria listed in Table 4-2 are discussed in further detail below.

Table 4-2. Scoring Matrix.

| Criteria | Weight |
|---|---|
| Effectiveness | 20 |
| Schedule | 10 |
| Optimization | 15 |
| Maintenance and reliability | 15 |
| Safety and ALARA | 20 |
| Flexibility | 10 |
| Process development status | 5 |
| Secondary waste | 15 |
| Cost | 10 |

ALARA = As Low As Reasonably Achieveable.

**4.3.2.1 Effectiveness.** The relative effectiveness of each alternative is evaluated by comparing the reduction in overall effluent toxicity achieved. To evaluate the reduction in effluent toxicity achieved by each alternative,

toxicity weighting factors (TWF) for each target constituent will be calculated using the following formula:

$$TWF = (10.95/CEL_{ac}) + (7.64/CEL_{ch})$$

where:

$CEL_{ac}$ = The freshwater acute toxicity-based comparative effluent level

$CEL_{ch}$ = The lowest chronic human health or freshwater organism toxicity-based comparative effluent level identified in Table 3-1 for that constituent.

The TWFs are equivalency factors, standardized to the acute and chronic toxicities of copper to freshwater organisms. The TWFs allow alternatives that remove different constituents to be compared. The sum of the products of the mass of each constituent removed and its TWF yields the total toxic equivalent mass removed (TEMR) by the treatment process. The alternative with the highest TEMR is the most effective.

The equation presented above is similar to that recommended in the Hanford BAT procedure (WHC 1988), with two exceptions. First, the factors in the numerators of the equation presented above are the freshwater acute and chronic toxicities for copper calculated at an ambient receiving water hardness of 60 mg/L as calcium carbonate; the equation presented in the Hanford BAT procedure does not account for differences in ambient receiving water hardness. Second, the equation in the Hanford BAT procedure does not account for constituents that do not have freshwater acute and chronic toxicities published in either the Gold Book or Chapter 173-201 WAC. The equation presented above has expanded the definition of chronic toxicity to include effluent comparative levels based on MCLs, SMCLs, or DCGs (converted to $\mu$g/L concentrations).

In evaluating the N Reactor treatment alternatives, the TEMR for each alternative was evaluated, and a score of 4 assigned to the most effective, a score of 3 to the next most effective, and a score of 2 to the least effective treatment alternative.

**4.3.2.2 Schedule.** Alternatives are ranked based on their ability to support the current schedule for ceasing discharges to the 1325-N Basin and for final N Reactor shutdown, using the following scale:

- Meets commitment for ceasing discharge to 1325-N Basin; few if any potential impacts to N Reactor shutdown schedule due to unavailability of equipment or supporting facilities = Score of 4

- Meets commitment of ceasing discharge to 1325-N Basin; potential impacts to N Reactor shutdown schedule due to unavailability of equipment/facilities are possible = Score of 3

- Some risk of not meeting commitment of ceasing discharge to 1325-N Basin, or many potential impacts to shutdown schedule due to unavailability of equipment/facilities = Score of 2

- High risk of not meeting commitment of ceasing discharge to 1325-N Basin; definite impacts to shutdown schedule = Score of 1.

**4.3.2.3 Optimization of Future and Existing Treatment Capability.** This criterion ranks each alternative based upon the extent to which they rely upon existing or currently planned and authorized facilities to manage the wastewater. Each alternative is ranked according to the following absolute scale:

- Relies solely on existing or currently planned and authorized facilities with minor modifications to items such as wastewater routing = Score of 4

- Relies upon existing or currently planned capability, but requires minor modifications or additions to treatment/disposal process = Score of 3

- Relies upon existing or currently planned capability, but requires major modifications or additions to treatment/disposal process = Score of 2

- Relies upon new facility which reuses little or no existing or currently planned future capability = Score of 1.

**4.3.2.4 Maintenance and Reliability.** Each alternative will be evaluated on its reliability and ease of maintenance based upon the following scale:

- Simple process requiring little corrective and preventive maintenance, and where equipment failures are unlikely to significantly impact process operation or effluent quality = Score of 4

- More complex process, requiring more frequent preventive maintenance, or where equipment failures may significantly impact process operation or effluent quality = Score of 3

- More complex process with the potential for frequent corrective maintenance, or where equipment failure is likely to significantly impact process operation effluent quality = Score of 2

- Complex process requiring frequent corrective maintenance, or where equipment failure will impact effluent quality = Score of 1.

**4.3.2.5 Safety and ALARA.** Process safety for each alternative is evaluated using the following scale:

- Process exceptionally safe, with minimal worker exposure to hazardous or radioactive materials during routine operation and maintenance = Score of 4

- Process safe, but requires shielding or engineered barriers to control exposure to hazardous or radioactive materials during routine operation and maintenance = Score of 3

- Process has some potential hazards, or an increased frequency of exposure to hazardous or radioactive materials = Score of 2

- Relatively hazardous process, or one that requires substantial shielding to ensure worker exposure limits are met during routine operation and maintenance = Score of 1.

**4.3.2.6 Flexibility.** The alternative that is the most able to respond to changing conditions, such as temperature, contaminant concentrations, contaminant constituents, and stream flow will be ranked with the highest ranking, based upon the following criteria:

- Process able to easily respond to varying process conditions with no significant impact to effluent or secondary waste quality; changes in flow rate can be absorbed for short periods of time based on component design and past operational experience = Score of 4

- Process able to easily respond to varying process conditions with no significant impact to effluent/secondary waste quality; changes in flow rate may be accommodated by minor modifications or restricting wastewater generating activities = Score of 3

- Process may respond to varying process conditions with no impact to effluent/secondary waste quality; process is not able to respond to significant flow variations without major modification = Score of 2

- Process may respond to varying process conditions only with major modifications = Score of 1.

**4.3.2.7 Process Development Status.** The level of technological maturity and the need for site-specific process development for the alternatives is evaluated using the following criteria:

- Process relies solely upon established, proven technologies, and will require minimal site-specific process development activity to ensure its suitability for this application = Score of 4

- Process relies upon established technologies, but will require more extensive site-specific development = Score of 3

- Process relies partially upon less-established technology = Score of 2

- Process is highly experimental = Score of 1.

**4.3.2.8 Secondary Waste (Volume/Form/Handling).** The alternatives will be ranked in terms of their secondary waste characteristics using the following criteria:

- Process generates relatively low volume of secondary waste that is relatively easy and inexpensive to handle = Score of 4

- Process generates higher volume of secondary waste that is relatively easy and inexpensive to handle = Score of 3

- Process generates higher volume of secondary waste that is more difficult and/or expensive to handle = Score of 2

- Process generates excessive amounts of secondary waste that is difficult and/or expensive to handle = Score of 1.

**4.3.2.9 Cost.** The alternative with the lowest total present worth cost over the project life will be given the highest ranking, with the alternative having the highest present worth cost receiving the lowest ranking. Alternatives that differ in cost by less than 25% will be ranked as equivalent.

### 4.3.3 Evaluation of the Alternatives

In this section, each of the three wastewater treatment alternatives described in Section 4.3.1 are evaluated using the criteria, weighting factors, and scoring system described in Section 4.3.2. Alternative B is selected as the BAT for treating the N Reactor wastewater.

To estimate treatment effectiveness and system performance, several sources of data on the performance of the selected unit operations have been used. These sources of data include average treatment efficiencies reported by the EPA (EPA 1990), and information supplied by vendors. Radionuclide treatability tests on the N Reactor wastewater conducted in the LETF pilot plant have been used where appropriate (UNC 1986a, 1986b, 1986c, 1987a, 1987b). Average DFs for radionuclides published in nuclear industry standards have also been used (ANSI/ANS 1979).

In some cases, engineering judgement has been used to apply treatability data for similar compounds to compounds for which no data exists. In all instances, the assumed DFs should be considered an estimate of system performance; actual performance may vary from the assumptions presented below and should be verified prior to proceeding with detailed process design.

All costs are provided in constant FY 1992 dollars. Cost estimates presented in this report were developed specifically for the comparison of treatment alternatives, and are not to be construed as total project implementation costs for budgetary purposes. All costs assume that the treatment systems will be located in the 107-N Building in the 100 N Area and will utilize existing utility services available at the 107-N Building to the maximum extent possible. Therefore, installed equipment costs include only a minimal markup (40%) over quoted purchased equipment costs to account for the placement and hookup of prepackaged treatment equipment units. For determining the present worth cost for each alternative, a 6-yr facility operating life and 7% time value for money were also assumed.

Design calculations and material balances are provided for Alternatives A, B and C in Appendices A, B, and C, respectively. Appendix D contains calculations and material balances for the recycle of the 105-N Fuel Basin area decontamination wastewater.

#### 4.3.3.1 Evaluation of Alternative A.

**4.3.3.1.1 Effectiveness.** The predicted effluent quality for Alternative A is tabulated in Table 4-3. The first column lists the specific compound or water quality parameter of interest. The second column lists the influent concentrations for those parameters. The next series of columns list the DFs associated with the treatment unit operations. For volatile species removals in the evaporator, the relative volatility (alpha) assumed is also provided in Table 4-3. The relative volatility is defined as the concentration in the overheads divided by the concentration in the evaporator bottoms. The DF and alpha are related by the following equation:

$$DF = Ci/Co=(Fo/Fi)-[Fo/(Fi*alpha)]+(1/alpha)$$

where:

Ci = Influent concentration
Co = Overhead concentration
Fi = Flow into evaporator
Fo = Flow out of evaporator.

The last columns list the final effluent concentration, comparative effluent levels, and the toxic equivalent mass removed by the treatment process. A total of 43 toxic equivalent lb/yr are removed by Alternative A.

A number of generalizations can be made regarding the treatment effectiveness of Alternative A. Effluent comparative levels are met for all organics. Heavy metal ions and other inorganic compounds are removed by filtration, IX, and evaporation. Evaporation is able to remove total dissolved solids with a DF of 1000. Two IX beds in series provide an additional DF of about 50. Filtration DFs are variable, based on the individual compound. Under these assumptions, effluent comparative levels are met following treatment for all constituents except tritium.

**4.3.3.1.2 Schedule.** All equipment needed to implement Alternative A is readily available; the longest lead time is required for procurement of the evaporator, which can be delivered approximately 26 weeks from placement of the order. This alternative relies on supporting Hanford Site facilities for management of secondary wastes, as described in Section 4.3.3.1.8. All of the facilities that will be used for secondary waste management are currently operational and have the capacity to accept the wastes which will be generated. Modifications to the existing Hanford Grout Treatment Facility (GTF) Resource Conservation and Recovery Act (RCRA) permit may be required to allow the disposal of some of the secondary wastes. Assuming each shipment of liquid wastes contains up to 18,000 gal of slurry, with at least one shipment made each year, one shipment of secondary waste slurry to the GTF will be required each year. Up to 10 shipments of dewatered resin to the Hanford Site Central Waste Complex from the treatment of both recycled and discharged wastewater are anticipated on an annual basis, assuming wastes are shipped immediately following resin changeout.

**4.3.3.1.3 Optimization of Future/Existing Treatment Capability.** Implementation of Alternative A will require the installation of a

# Table 4-3. Alternative A Effluent Quality.

60 mg/L of Hardness
10 gal/min
800 hr/yr of Operation
0.999 Evaporation Concentration Factor

| Chemical | Influent Conc. (ug/L) | Removal DFs: Filtration (DF) | Evaporation (DF) | IX (DF) | GAC (DF) | Overall (DF) | Effluent Conc. (ug/L) | Effluent Comparative Levels: Chronic (ug/L) | Acute (ug/L) | Toxic Lbs Removed (lbs/yr)** |
|---|---|---|---|---|---|---|---|---|---|---|
| **INORGANICS** | | | | | | | | | | |
| Ammonia (Total N) | 2.23E+02 | 1 | 100 | 50 | 1 | 4.97E+03 | 5.00E+01 (a) | 2.00E+03 | 1.65E+04 | 4.00E-03 |
| Ammonia | 3.00E+00 | 1 | | | | 6.76E+01 | 4.43E-02 | | | |
| Ammonium | 2.20E+02 | 1 | | | | 3.94E+05 | 5.58E-04 | | | |
| Aluminum | 3.80E+01 | 7.1 | 1000 | 50 | 1 | 3.55E+05 | 3.00E+00 (i) | 5.00E+01 | | 2.32E-02 |
| Antimony | 1.40E+01 | 1.1 | 1000 | 50 | 1 | 5.50E+04 | 3.00E+00 (j) | 1.60E+03 | 9.00E+03 | 3.35E-04 |
| Arsenic | 1.30E+01 | 1.1 | 1000 | 50 | 1 | 5.50E+04 | 1.00E+00 (k) | 1.90E+02 | 3.60E+02 | 3.67E-03 |
| Barium | 1.04E+02 | 1.3 | 1000 | 50 | 1 | 6.50E+04 | 2.00E+00 (b) | 1.00E+03 | | 3.18E-03 |
| Boron | 8.34E+01 | 1.1 | 1000 | 50 | 1 | 5.50E+04 | 5.00E+00 (b) | | | |
| Cadmium | 3.00E+00 | 1.3 | 1000 | 50 | 1 | 6.50E+04 | 1.00E-01 (l) | 7.59E-01 | 2.20E+00 | 1.80E-01 |
| Calcium | 2.28E+04 | 1 | 1000 | 50 | 1 | 5.00E+04 | 1.00E+01 (b) | | | |
| Chloride | 2.60E+03 | 1 | 1000 | 50 | 1 | 5.00E+04 | 1.00E+02 (c) | 2.50E+05 | | 3.18E-04 |
| Chromium | 6.00E+00 (b) | 5.1 | 1000 | 50 | 1 | 2.55E+05 | 7.00E+00 (b) | 1.10E+01 | 1.60E+01 | 3.31E-02 |
| Cobalt | 0.00E+00 (b) | 1 | 1000 | 50 | 1 | 1.00E+00 | 7.00E+00 (b) | | | |
| Copper | 3.00E+01 | 2.3 | 1000 | 50 | 1 | 1.15E+05 | 1.00E+00 (m) | 7.44E+00 | 1.10E+01 | 2.39E-01 |
| Fluoride | 2.04E+02 | 1 | 1000 | 50 | 1 | 5.00E+04 | 1.00E+02 (d) | 4.00E+03 | | 1.56E-03 |
| Iron | 1.79E+02 | 17.3 | 1000 | 50 | 1 | 8.65E+05 | 7.00E+00 (b) | 1.60E+03 | | 5.47E-03 |
| Lead | 3.90E+01 | 2.7 | 1000 | 50 | 1 | 1.35E+05 | 1.00E+00 (n) | 1.86E+00 | 4.26E+01 | 7.58E-01 |
| Magnesium | 6.81E+03 | 1 | 1000 | 50 | 1 | 5.00E+04 | 3.00E+01 (b) | | | |
| Manganese | 8.69E+01 | 3 | 1000 | 50 | 1 | 1.50E+05 | 2.00E+00 (b) | 5.00E+01 | | 5.31E-02 |
| Nickel | 9.00E+00 (b) | 1.2 | 1000 | 50 | 1 | 6.00E+04 | 1.50E+01 (b) | 1.02E+02 | 9.21E+02 | 3.12E-03 |
| Nitrate | 4.38E+02 | 1 | 1000 | 50 | 1 | 5.00E+04 | 1.00E+02 (e) | 1.00E+04 | | 1.34E-03 |
| Phosphorous | 2.00E+01 (f) | 1 | 1000 | 50 | 1 | 5.00E+04 | 1.00E+02 (f) | | | |
| Potassium | 3.53E+03 | 1.2 | 1000 | 50 | 1 | 6.00E+04 | 5.00E+02 (b) | | | |
| Selenium | 4.20E+01 | 1 | 1000 | 50 | 1 | 5.00E+04 | 2.00E+00 (o) | 3.50E+01 | 2.60E+02 | 4.37E-02 |
| Silicon | 2.04E+03 | 10 | 1000 | 50 | 1 | 5.00E+05 | 5.80E+01 (b) | | | |
| Silver | 5.00E-01 | 1.2 | 1000 | 50 | 1 | 6.00E+04 | 2.00E-01 (p) | 1.20E-01 | 1.69E+00 | 1.40E-01 |
| Sodium | 1.97E+04 | 1 | 1000 | 50 | 1 | 3.61E-02 | 5.46E+05 | | | |
| Strontium | 8.73E+01 | 1.1 | 1000 | 50 | 1 | 5.50E+04 | 2.00E+01 (u) | | | |
| Sulfate | 1.21E+04 | 1 | 1000 | 50 | 1 | 2.11E+04 | 2.50E+03 (g) | 2.50E+05 | | 1.48E-03 |
| Uranium | 2.84E+00 | 10 | 1000 | 50 | 1 | 5.00E+05 | 1.00E+00 (t) | | | |
| Vanadium | 6.10E+00 (b) | 1 | 1000 | 50 | 1 | 5.00E+04 | 8.00E+00 (b) | | | |
| Zinc | 1.21E+01 | 2.2 | 1000 | 50 | 1 | 1.10E+05 | 5.00E-02 (q) | 6.98E+01 | 7.59E+01 | 1.24E-02 |
| **ORGANICS** | | | Alpha | | | | | | | |
| Acetone | 1.73E+01 (h) | 1.3 | 4.08 | 1 | 1 | 1.30E+00 | 5.00E+01 (h) | | | |
| 1-butanol | 3.62E+01 | 1 | 0.49 | 1 | 100 | 9.99E+01 | 3.62E-01 | | | |
| 2-butanone | 2.91E+01 (h) | 1 | 1.83 | 1 | 100 | 9.99E+01 | 5.00E+01 (h) | | | |
| BHT | 1.35E+01 | 1 | 0.0003 | 1 | 100 | 1.09E+02 | 1.24E-01 | | | |
| Hexone (MIBK) | 1.03E+01 | 1.5 | 0.51 | 1 | 100 | 1.50E+02 | 6.87E-02 | | | |
| Toluene | 5.36E+00 | 1 | 0.72 | 1 | 100 | 9.99E+01 | 2.00E-01 (r) | 1.43E+04 | 1.75E+04 | 2.46E-05 |
| Trichloromethane | 5.19E+00 | 1 | 3.08 | 1 | 100 | 9.99E+01 | 5.20E-02 | 1.24E+03 | 2.99E+04 | 1.34E-04 |
| Tetrachloroethene | 1.00E+00 | 1 | 0.82 | 1 | 100 | 9.99E+01 | 3.00E-02 (s) | 8.40E+02 | 5.28E+03 | 4.42E-05 |
| **RADIONUCLIDES** | (pCi/L) | | | | | | | (pCi/L) | | |
| Total Alpha | 4.99E+01 | 10 | 1000 | 50 | 1 | 5.00E+05 | 9.98E-05 | | | |
| Total Beta | 1.65E+06 | 1 | 1 | 2 | 1 | 1.70E+00 | 9.71E+05 | | | |
| Am-241 | 7.03E+01 | 10 | 1000 | 50 | 1 | 5.00E+05 | 1.41E-04 | 3.00E+01 | | 5.25E-02 |
| Cm-242 | 4.93E-01 | 10 | 1000 | 50 | 1 | 5.00E+05 | 9.86E-07 | 1.00E+03 | | 1.10E-05 |
| Cm-244 | 8.92E-01 | 10 | 1000 | 50 | 1 | 5.00E+05 | 1.78E-06 | 6.00E+01 | | 3.33E-04 |
| Co-60 | 7.00E+03 | 7.4 | 1000 | 50 | 1 | 3.70E+05 | 1.89E-02 | 1.00E+04 | | 1.57E-02 |
| Cs-134 | 1.67E+03 | 1.1 | 1000 | 50 | 1 | 5.50E+04 | 3.04E-02 | 2.00E+03 | | 1.87E-02 |
| Cs-137 | 4.71E+05 | 1.1 | 1000 | 50 | 1 | 5.50E+04 | 8.56E+00 | 3.00E+03 | | 3.51E+00 |
| C-14 | 4.24E+01 | 1 | 1000 | 1 | 1 | 1.00E+03 | 4.24E-02 | 7.00E+04 | | 1.35E-05 |
| H-3 | 5.54E+06 | 1 | 1 | 1 | 1 | 1.00E+00 | 5.54E+06 * | 2.00E+06 | | 0.00E+00 |
| Mn-54 | 6.04E+03 | 3 | 1000 | 50 | 1 | 1.50E+05 | 4.03E-02 | 5.00E+04 | | 2.70E-03 |
| Pb-210 | 2.97E+01 | 2.7 | 1000 | 50 | 1 | 1.35E+05 | 2.20E-04 | 3.00E+01 | | 2.22E-02 |
| Pu-238 | 1.09E+01 | 10 | 1000 | 50 | 1 | 5.00E+05 | 2.18E-05 | 4.00E+01 | | 6.10E-03 |
| Pu-239/240 | 6.66E+01 | 10 | 1000 | 50 | 1 | 5.00E+05 | 1.33E-04 | 3.00E+01 | | 4.97E-02 |
| Radium | 3.30E-01 | 10 | 1000 | 50 | 1 | 5.00E+05 | 6.60E-07 | 1.00E+02 | | 7.39E-05 |
| Ru-106 | 1.72E+04 | 1.7 | 1000 | 50 | 1 | 8.50E+04 | 2.02E-01 | 6.00E+03 | | 6.42E-02 |
| Sr-90 | 1.76E+06 | 1.1 | 1000 | 50 | 1 | 5.50E+04 | 3.20E+01 * | 1.00E+03 | | 3.94E+01 |
| U-234 | 1.60E+00 | 10 | 1000 | 50 | 1 | 5.00E+05 | 3.20E-06 | 5.00E+02 | | 7.16E-05 |
| U-235 | 2.17E-01 | 10 | 1000 | 50 | 1 | 5.00E+05 | 4.34E-07 | 6.00E+02 | | 9.10E-06 |
| U-238 | 1.13E+00 | 10 | 1000 | 50 | 1 | 5.00E+05 | 2.26E-06 | 6.00E+02 | | 4.22E-05 |
| | | | | | | | Total Toxic Pounds Removed per Year | | | 43.154 |

Toxic pounds removed per year is based on the design stream flow of 1,916,800 L/yr (480,000 gal/yr).
Organic DFs for evaporation are based on relative volatility factors (alpha).
Comparative Levels are as previously presented in Table 3-1.
Sodium and sulfate concentrations in the treated effluent are effected by chemical additions during processing.
* Constituent does not meet effluent quality criteria in treated wastewater.
** Calculated as described in Section 4.3.2.1

Footnotes in the Influent Concentration column indicate that the concentration that has been reported is less than the detection limit for that constituent using the EPA Method cited below.
Footnotes in the Effluent Concentration column indicate that the calculated concentration is lower than the detection limit using the EPA Method cited below.
The detection limits are listed in the Effluent Concentration column when the calculated concentration was lower than the detection limit.

a. EPA Method 350.3
b. EPA Method 200.7
c. EPA Method 325.1
d. EPA Method 340.1
e. EPA Method 352.1
f. EPA Method 365.2
g. EPA Method 375.1
h. EPA Method 1624
i. EPA Method 202.2
j. EPA Method 204.2
k. EPA Method 206.2
l. EPA Method 213.2
m. EPA Method 220.2
n. EPA Method 239.2
o. EPA Method 270.2
p. EPA Method 272.2
q. EPA Method 289.2
r. EPA Method 602
s. EPA Method 601
t. ASTM-D2907-83
u. EPA Method 6010

IX = Ion Exchange
DF = Decontamination Factor
GAC = Granular Activated Carbon Adsorption

microfilter, an evaporator, an IX battery, a GAC treatment system, and a prepackaged steam boiler and supporting propane tank. This equipment can be installed in or near the existing 107-N Building. The current resin dewatering and loadout tank (Tank T-5), regenerant chemical storage tanks (T-2 and T-3), the 107-N Sand Filters, and the sand filter sludge loadout tank (Tank T-1) can be reused to implement this alternative. Existing waste transfer piping between the 105-N Fuel Basin area and the 107-N Building will be reused for recycling decontamination water. Additional transfer piping between the 105-N Lift Station and the 107-N Building, and between the 107-N Building and the 009 Outfall will be necessary. Additional new supporting equipment will include a 20 gal/min sump pump and agitator for the 105-N Lift Station, and two 18,000-gal discharge holding tanks for treated effluent.

**4.3.3.1.4 Maintenance and Reliability.** Routine maintenance and operation is required for several of the unit operations in Alternative A. The filtration, IX, and GAC adsorption systems have components that will be replaced on a periodic basis. The treatment system design reflects the need to replace these parts with minimal effort and frequency.

The filter elements are designed to be automatically back-flushed without human contact. Contact maintenance is required only when filter elements must be replaced. Filter element lives of 3 to 10 yr are common, especially when precoats are used, as filter element pores do not become plugged with small solids. Before replacement, the filters should be thoroughly back-flushed and cleaned in place to minimize potential exposure hazards.

Maintenance of the GAC columns requires GAC replacement, pump servicing, and routine inspection. None of these operations is technically difficult. The GAC replacement involves hydraulically transferring the spent GAC to a holding tank, dewatering the spent GAC, barreling the spent GAC, and recharging the adsorption vessel. Pump servicing and routine inspection are simple operations. Overall, the GAC adsorption component is relatively easy to maintain. Routine operation will involve sample collection between the two GAC columns to determine when breakthrough occurs.

Maintenance for the MVR evaporator will need to address three areas: wear on the compressor, scaling of the heat transfer surfaces, and corrosion of the pressure vessel walls and heat transfer surface areas. Compressor wear can be monitored by the use of appropriate sensors on the rotating elements and by visually inspecting components at regularly scheduled intervals. The evaporator has a scale control system, but scaling needs to be monitored by observing heat transfer performance over a period of time. If scale deposits need to be removed, it may be necessary to clean the heat transfer surfaces if other means are not successful in controlling scaling. Corrosion can be monitored by a careful nondestructive inspection program using ultrasonic thickness testing, acoustic emissions testing, X-ray inspection, and visual inspection. If corrosion rates are excessive or pitting develops, repairs will have to be made to the appropriate areas. None of these maintenance requirements is unusual or exceptional. Operating time is estimated at 2 worker-hours per shift. General duties include monitoring operations, housekeeping, and sample chemistry evaluation.

The IX operation requires maintenance and routine resin regeneration or replacement similar to the operation described for the GAC system. The strong acid IX resin will require replacement or regeneration approximately 10 times per year for the column used to treat both wastewater and recycled decontamination water from the fuel basin. The strong acid IX columns used strictly for treatment of wastewater are not expected to require replacement or regeneration during the life of the facility. Weak base columns will require less frequent regeneration or changeout.

Mechanical failure of any of the treatment equipment in Alternative A is not likely to significantly impact treated water quality. Equipment failure is more likely to cause wastewater flows to cease, preventing the discharge of untreated effluent.

**4.3.3.1.5 Safety and ALARA.** There are no unusual safety concerns associated with Alternative A. Minimal worker exposure to hazardous chemicals or conditions is expected.

**Dose Rates from Treatment of 105-N Lift Station Wastewater.** Radiation dose rates from the treatment of wastewater from the 105-N Lift Station are expected to be minimal. Dose rates from the spent carbon are estimated to be $5 \times 10^{-4}$ mR/h for one 35.2 $ft^3$ canister of spent carbon at a distance of 1 ft. Dose rates for spent carbon in stacked and lined 55-gal drums are estimated to be 3 to 4 orders of magnitude less than that for a canister full of spent carbon from the same distance.

Radiation dose rate estimate for one 12 $ft^3$ IX column range up to 5 mR/h at a distance of 1 ft. Dose rates for spent IX resins in stacked and lined 55-gal drums are estimated to be 1 to 2 orders of magnitude less than that for the IX column.

Dose rates from filter slurries in a tanker car are estimated to be less than 10 mR/h at 3 ft. Dose rates from evaporator bottoms in the same geometry are less than 150 mR/h at 3 ft.

**Dose Rates from Treatment of 105-N Fuel Basin Wastewater.** Radiation dose rates from the treatment of decontamination wastewater from the 105-N Fuel Basin are expected to be significantly higher than those noted above. Average radiation dose rates from one IX column are estimated to be on the order of 50 mR/h at 1 ft and 16 mR/h at 3 ft. Dose rates from spent resin packaged in 55-gal drums are estimated to be approximately 20 mR/h at 1 ft and less than 5 mR/h at 3 ft.

Dose rates from approximately 2000 gal of sludge accumulated in Tank T-1 are estimated to be on the order of 2000 mR/h at a distance of 1 ft, and 600 mR/h at a distance of 3 ft. For waste shipments, dose rates are estimated to be on the order of 15,000 mR/h at 1 ft, and 750 mR/h at 3 ft from the sides of the tanker car; dose rates on the order of 1700 mR/h at 1 ft and 750 mR/h at 3 ft from the ends of the tanker are also anticipated.

**4.3.3.1.6 Flexibility.** All of the treatment operations used in Alternative A are relatively insensitive to variations in both flow and constituent concentrations.

All treatment equipment has been sized to allow for a doubling of the effective flow rate with minimal impact upon equipment operation. With this sizing assumption, the MVR evaporator is operating at its maximum turndown ratio; therefore, further reductions in treatment system flow rate cannot be accommodated without the use of accumulation tanks upstream and downstream of the evaporator to allow for operation at a minimum 10 gal/min flow rate.

Removal efficiencies for each of the treatment operations are not expected to be a strong function of stream composition at constituent concentrations of the order of magnitude of those encountered in the N Reactor wastewater. The treatment operations selected are broad-spectrum and applicable to a wide variety of contaminants.

**4.3.3.1.7 Process Development Status.** Alternative A relies solely upon well-established treatment technologies, and is anticipated to require a minimum level of site-specific process development activity. Final IX resin selection should be based upon bench scale test results verifying that acceptable decontamination factors can be maintained with acceptably long operating periods between resin regeneration or replacement.

**4.3.3.1.8 Secondary Waste.** Secondary wastes produced by Alternative A include filter and evaporator slurries, and wastes from both IX and GAC processing.

Because relatively small amounts of GAC will be expended on an annual basis, it is recommended that the spent GAC be disposed of without attempting to regenerate it. Approximately 60 $ft^3$ of GAC will be expended in treating 480,000 gal of N Reactor wastewater. The GAC is expected to be mixed waste.

Evaporator and filter slurries can be shipped as a liquid to other Hanford Site facilities for additional processing, or stabilized at N Reactor and shipped as solid wastes.

Approximately 8357 gal/yr (1117 $ft^3$/yr) of 18% by volume slurry will be generated by treatment of both the wastewater from the 105-N Lift Station and 105-N Fuel Basin decontamination wastewater. Based upon the assumed influent concentrations and decontamination factors for filtration and evaporation, the resulting slurry will exceed current GTF feed specifications for aluminum, chromium, iron, and sodium. Assuming the majority of the lead is present in the solids in a form that is not highly leachable, the lead and cadmium concentrations are not expected to be high enough to subject the wastes to federal land disposal restriction (LDR) regulations. The total cost for disposal at the GTF is estimated to be approximately $163,000/yr, assuming a $14/gal cost for grout treatment (WHC 1990b). More recent cost estimates for grout treatment have ranged as high as $22/gal; at this rate, grout treatment of the secondary wastes would cost $233,000/yr.

Filter and evaporator slurries could also be stabilized onsite by mixing them with cement or diatomaceous earth, with the stabilized slurry transferred into 55-gal drums and shipped to the Hanford Central Waste Complex for treatment and disposal as a solid low level radioactive waste. Approximately 1151 $ft^3$ of waste would be generated through onsite stabilization. The cost for disposal of low-level wastes at the Hanford Site is approximately $69/$ft^3$; therefore, the cost for disposal of the stabilized wastes would be

approximately $79,419 plus equipment approximate costs. Minimum purchased equipment costs for a drum stabilization system are estimated to be on the order of $150,000.

Based upon the cost and volume estimates, and the relatively small volume of liquid waste that must be transported, shipment of unstabilized liquid wastes to the GTF is recommended.

Spent IX resin can be regenerated, with the regeneration solutions shipped to other Hanford Site facilities for treatment and disposal. Approximately 17,000 gal of IX regeneration waste would be generated on an annual basis by Alternative A. Based upon then assumed influent concentrations and the DFs for the IX system, the regeneration wastes are expected to contain aluminum, barium, iron, and sodium concentrations that exceed the concentrations allowed under the current GTF RCRA permit. Assuming that treatment at the GTF was feasible, the minimum cost of treatment would be approximately $240,000 per year.

Alternatively, the spent resin can be replaced with fresh resin and the spent resin disposed of as a solid waste. Approximately 195 $ft^3$ of spent resin would be generated annually by Alternative A; this equates to approximately $2 \times 10^{-4}$ $ft^3$/gal wastewater treated. This resin is likely to be a mixed waste; disposal of 195 $ft^3$ of mixed waste would cost approximately $58,500/yr. Based upon these cost and volume estimates, disposal of spent resin is preferred to regeneration for Alternative A.

Assuming that the recommended management alternatives are chosen, Alternative A will generate approximately 255 $ft^3$/yr of solid mixed waste and 8357 gal/yr of liquid waste that will require stabilization at the GTF.

**4.3.3.1.9 Cost.** Estimated costs for installing and operating Alternative A are provided in Table 4-4. The total present worth cost of Alternative A is estimated to be $6.2 million.

**4.3.3.2 Evaluation of Alternative B.**

**4.3.3.2.1 Effectiveness.** The predicted effluent quality for Alternative B is tabulated in Table 4-5. A total of 43 toxic equivalent lb/yr are removed by Alternative B.

As in Alternative A, effluent comparative levels are met after treatment for all organic species. Heavy metal ions and other inorganic compounds are removed by filtration and IX. Four IX beds in series provide a DF of about 10,000. Filtration DFs are variable, based on the individual compound. As in Alternative A, effluent comparative levels for tritium are not met after treatment.

**4.3.3.2.2 Schedule.** All equipment needed to implement Alternative B is readily available. This alternative relies on existing supporting Hanford Site facilities for management of secondary wastes, as described in Section 4.3.3.2.8. All facilities that will be used for secondary waste management are currently operational and have the capacity to accept the wastes that will be generated; GTF permit modifications will also be required

Table 4-4. Cost Estimate Treatment Alternative A.

| Item | Unit Cost | Quantity | | Subtotal | | Total |
|---|---|---|---|---|---|---|
| Remove existing equipment | | | | | | |
| Demolition | $150/ft$^2$ | 300 | ft$^2$ | $45,000 | | |
| Disposal | $69/ft$^2$ | 212 | ft$^2$ | $14,628 | | |
| Process equipment (installed) | | | | | | |
| Evaporator (20 gal/min) | $1,085,000 ea | 1 | | $1,085,000 | | |
| Filter (58.8 ft$^2$) | $42,000 ea | 1 | | $42,000 | | |
| Granulated activated carbon (35 ft$^3$) | $7,000 ea | 2 | | $14,000 | | |
| Ion exchange (13 ft$^3$) | $31,500 ea | 4 | | $126,000 | | |
| Steam boiler (4.2E+05 Btu/h) | $4,396 ea | 1 | | $4,396 | | |
| Discharge tanks (18 kgal) | $70,000 ea | 2 | | $140,000 | | |
| Pumps | $11,200 LS | 1 | | $11,200 | | |
| Piping | | | | | | |
| Piping to 009 Outfall | $82/ft | 875 | ft | $71,750 | | |
| Piping to 107-N | $82/ft | 600 | ft | $49,200 | | |
| Subtotal | | | | | | $1,603,174 |
| Instrumentation and miscellaneous hookups @ 15% | | | | | | $240,476 |
| Engineering @ 27% | | | | | | $432,857 |
| Contract administration @ 16% | | | | | | $256,508 |
| Project management @ 15% | | | | | | $240,476 |
| Contingency @ 30% | | | | | | $480,952 |
| Total Installed Equipment | | | | | | $3,254,443 |
| Annual operating costs | | | | | | |
| Treatment Secondary Waste Disposal | | | | | | |
| Spent granulated activated carbon | $300/ft$^3$ | 59 | ft$^3$ | 17,700 | * | |
| Spent resin | $300/ft$^3$ | 0.35 | ft$^3$ | $105 | * | |
| Evaporator slurry | $22/gal | 480 | gal | $10,560 | * | |
| Filter solids | $22/gal | 639 | gal | $14,058 | * | |
| Decon water recycle secondary waste disposal | | | | | | |
| Spent resin | $300/ft$^3$ | 195 | ft$^3$ | $58,500 | * | |
| Filter solids | $22/gal | 7239 | gal | $159,258 | ** | |
| Secondary waste shipment | | | | | | |
| Railcar load/unload | $5/gal | 8358 | gal | $41,790 | | |
| Railcar operation | $7,200/d | 1 | d | $7,200 | | |
| Maintenance (10% Equipment) | $160,317 LS | 1 | | $160,317 | | |
| Propane | $1/gal | 326 | gal | $245 | | |
| Outfall analyses | $4,000 ea | 4 | | $16,000 | | |
| Operations | $45/h | 2800 | h | $126,000 | | |
| Subtotal | | | | | | $611,733 |
| TOTAL PRESENT WORTH FOR ALTERNATIVE | | | | | | $6,170,574 |

LS = Lump sum
*Based on 480,000 gal/yr effluent
**Based on 25,200,000 gal/yr effluent
(1050 gal/min for 400 h)

# Table 4-5. Alternative B Effluent Quality.

60 mg/L of Hardness
10 gal/min
800 hr/yr of Operation

| Chemical | Influent Conc. (ug/L) | Removal DFs: Filtration (DF) | Removal DFs: IX (DF) | Removal DFs: GAC (DF) | Removal DFs: Overall (DF) | Effluent Conc. (ug/L) | Effluent Comparative Levels: Chronic (ug/L) | Effluent Comparative Levels: Acute (ug/L) | Toxic Lbs Removed (lbs/yr)** |
|---|---|---|---|---|---|---|---|---|---|
| **INORGANICS** | | | | | | | | | |
| Ammonia (Total N) | 2.23E+02 | 1 | 10000 | 1 | 1.01E+04 | 5.00E+01 (a) | 2.00E+03 | 1.65E+04 | 4.00E-03 |
| Ammonia | 3.00E+00 | 1 | | | 1.37E+02 | 2.18E-02 | | | |
| Ammonium | 2.20E+02 | 1 | | | 7.99E+05 | 2.75E-04 | | | |
| Aluminum | 3.80E+01 | 7.1 | 10000 | 1 | 7.10E+04 | 3.00E+00 (i) | 5.00E+01 | | 2.32E-02 |
| Antimony | 1.40E+01 | 1.1 | 10000 | 1 | 1.10E+04 | 3.00E+00 (j) | 1.60E+03 | 9.00E+03 | 3.35E-04 |
| Arsenic | 1.30E+01 | 1.1 | 10000 | 1 | 1.10E+04 | 1.00E+00 (k) | 1.90E+02 | 3.60E+02 | 3.67E-03 |
| Barium | 1.04E+02 | 1.3 | 10000 | 1 | 1.30E+04 | 2.00E+00 (b) | 1.00E+03 | | 3.18E-03 |
| Boron | 8.34E+01 | 1.1 | 10000 | 1 | 1.10E+04 | 5.00E+00 (b) | | | |
| Cadmium | 3.00E+00 | 1.3 | 10000 | 1 | 1.30E+04 | 1.00E-01 (l) | 7.59E-01 | 2.20E+00 | 1.80E-01 |
| Calcium | 2.28E+04 | 1 | 10000 | 1 | 1.00E+04 | 1.00E+01 (b) | | | |
| Chloride | 2.60E+03 | 1 | 10000 | 1 | 1.00E+04 | 1.00E+02 (c) | 2.50E+05 | | 3.18E-04 |
| Chromium | 6.00E+00 (b) | 5.1 | 10000 | 1 | 5.10E+04 | 7.00E+00 (b) | 1.10E+01 | 1.60E+01 | 3.31E-02 |
| Cobalt | 0.00E+00 (b) | 1 | 10000 | 1 | 1.00E+00 | 7.00E+00 (b) | | | |
| Copper | 3.00E+01 | 2.3 | 10000 | 1 | 2.30E+04 | 1.00E+00 (m) | 7.64E+00 | 1.10E+01 | 2.39E-01 |
| Fluoride | 2.04E+02 | 1 | 10000 | 1 | 1.00E+04 | 1.40E+02 (d) | 4.00E+03 | | 1.56E-03 |
| Iron | 1.79E+02 | 17.3 | 10000 | 1 | 1.73E+05 | 7.00E+00 (b) | 1.00E+03 | | 5.47E-03 |
| Lead | 3.90E+01 | 2.7 | 10000 | 1 | 2.70E+04 | 1.00E+00 (n) | 1.66E+00 | 4.26E+01 | 7.58E-01 |
| Magnesium | 6.81E+03 | 1 | 10000 | 1 | 1.00E+04 | 3.00E+01 (b) | | | |
| Manganese | 8.69E+01 | 3 | 10000 | 1 | 3.00E+04 | 2.00E+00 (b) | 5.00E+01 | | 5.31E-02 |
| Nickel | 9.00E+00 (b) | 1.2 | 10000 | 1 | 1.20E+04 | 1.50E+01 (b) | 1.02E+02 | 9.21E+02 | 3.11E-03 |
| Nitrate | 4.38E+02 | 1 | 10000 | 1 | 1.00E+04 | 1.00E+02 (e) | 1.00E+04 | | 1.34E-03 |
| Phosphorous | 2.00E+01 (f) | 1 | 10000 | 1 | 1.00E+04 | 1.00E+02 (f) | | | |
| Potassium | 3.53E+03 | 1.2 | 10000 | 1 | 1.20E+04 | 5.00E+02 (b) | | | |
| Selenium | 4.20E+01 | 1 | 10000 | 1 | 1.00E+04 | 2.00E+00 (o) | 3.50E+01 | 2.60E+02 | 4.37E-02 |
| Silicon | 2.04E+03 | 10 | 10000 | 1 | 1.00E+05 | 5.80E+01 (b) | | | |
| Silver | 5.00E-01 | 1.2 | 10000 | 1 | 1.20E+04 | 2.00E-01 (p) | 1.20E-01 | 1.69E+00 | 1.40E-01 |
| Sodium | 1.97E+04 | 1 | 10000 | 1 | 2.61E-02 | 7.54E+05 | | | |
| Strontium | 8.73E+01 | 1.1 | 10000 | 1 | 1.10E+04 | 2.00E+01 (u) | | | |
| Sulfate | 1.21E+04 | 1 | 10000 | 1 | 1.00E+04 | 2.50E+03 (g) | 2.50E+05 | | 1.48E-03 |
| Uranium | 2.84E+00 | 10 | 10000 | 1 | 1.00E+05 | 1.00E+00 (t) | | | |
| Vanadium | 6.10E+00 (b) | 1 | 10000 | 1 | 1.00E+04 | 8.00E+00 (b) | | | |
| Zinc | 1.21E+01 | 2.2 | 10000 | 1 | 2.20E+04 | 5.00E-02 (q) | 6.88E+01 | 7.59E+01 | 1.24E-02 |
| **ORGANICS** | | | | | | | | | |
| Acetone | 1.73E+01 (h) | 1.3 | 1 | 1 | 3.46E-01 | 5.00E+01 (h) | | | |
| 1-butanol | 3.62E+01 | 1 | 1 | 100 | 1.00E+02 | 3.62E-01 | | | |
| 2-butanone | 2.91E+01 (h) | 1 | 1 | 100 | 5.82E-01 | 5.00E+01 (h) | | | |
| BHT | 1.35E+01 | 1 | 1 | 100 | 1.00E+02 | 1.35E-01 | | | |
| Hexone (MIBK) | 1.03E+01 | 1.5 | 1 | 100 | 1.50E+02 | 6.87E-02 | | | |
| Toluene | 5.36E+00 | 1 | 1 | 100 | 2.68E+01 | 2.00E-01 (r) | 1.43E+04 | 1.75E+04 | 2.46E-05 |
| Trichloromethane | 5.19E+00 | 1 | 1 | 100 | 1.00E+02 | 5.19E-02 | 1.24E+03 | 2.89E+04 | 1.34E-04 |
| Tetrachloroethene | 1.00E+00 | 1 | 1 | 100 | 3.33E+01 | 3.00E-02 (s) | 8.40E+02 | 5.28E+03 | 4.42E-05 |
| **RADIONUCLIDES** | (pCi/L) | | | | | | (pCi/L) | | |
| Total Alpha | 4.99E+01 | 10 | 10000 | 1 | 1.00E+05 | 4.99E-04 | | | |
| Total Beta | 1.66E+06 | 1 | 9344 | 1 | 9.34E+03 | 1.77E+02 | | | |
| Am-241 | 7.03E+01 | 10 | 10000 | 1 | 1.00E+05 | 7.03E-04 | 3.00E+01 | | 5.25E-02 |
| Cm-242 | 4.93E-01 | 10 | 10000 | 1 | 1.00E+05 | 4.93E-06 | 1.00E+03 | | 1.10E-05 |
| Cm-244 | 8.92E-01 | 10 | 10000 | 1 | 1.00E+05 | 8.92E-06 | 6.00E+01 | | 3.33E-04 |
| Co-60 | 7.00E+03 | 7.4 | 10000 | 1 | 7.40E+04 | 9.46E-02 | 1.00E+04 | | 1.57E-02 |
| Cs-134 | 1.67E+03 | 1.1 | 10000 | 1 | 1.10E+04 | 1.52E-01 | 2.00E+03 | | 1.87E-02 |
| Cs-137 | 4.71E+05 | 1.1 | 10000 | 1 | 1.10E+04 | 4.28E+01 | 3.00E+03 | | 3.51E+00 |
| C-14 | 4.24E+01 | 1 | 1 | 1 | 1.00E+00 | 4.24E+01 | 7.00E+04 | | 0.00E+00 |
| H-3 | 5.54E+06 | 1 | 1 | 1 | 1.00E+00 | 5.54E+06 * | 2.00E+06 | | 0.00E+00 |
| Mn-54 | 6.04E+03 | 3 | 10000 | 1 | 3.00E+04 | 2.01E-01 | 5.00E+04 | | 2.70E-03 |
| Pb-210 | 2.97E+01 | 2.7 | 10000 | 1 | 2.70E+04 | 1.10E-03 | 3.00E+01 | | 2.22E-02 |
| Pu-238 | 1.09E+01 | 10 | 10000 | 1 | 1.00E+05 | 1.09E-04 | 4.00E+01 | | 6.10E-03 |
| Pu-239/240 | 6.66E+01 | 10 | 10000 | 1 | 1.00E+05 | 6.66E-04 | 3.00E+01 | | 4.97E-02 |
| Radium | 3.30E-01 | 10 | 10000 | 1 | 1.00E+05 | 3.30E-06 | 1.00E+02 | | 7.39E-05 |
| Ru-106 | 1.72E+04 | 1.7 | 10000 | 1 | 1.70E+04 | 1.01E+00 | 6.00E+03 | | 6.42E-02 |
| Sr-90 | 1.76E+06 | 1.1 | 10000 | 1 | 1.10E+04 | 1.60E+02 * | 1.00E+03 | | 3.94E+01 |
| U-234 | 1.60E+00 | 10 | 10000 | 1 | 1.00E+05 | 1.60E-05 | 5.00E+02 | | 7.16E-05 |
| U-235 | 2.17E-01 | 10 | 10000 | 1 | 1.00E+05 | 2.17E-06 | 6.00E+02 | | 8.10E-06 |
| U-238 | 1.13E+00 | 10 | 10000 | 1 | 1.00E+05 | 1.13E-05 | 6.00E+02 | | 4.22E-05 |
| | | | | | | Total Toxic Pounds Removed per Year | | | 43.150 |

Toxic pounds removed per year is based on the design stream flow of 1,816,800 L/yr (480,000 gal/yr).
Organic DFs for evaporation are based on relative volatility factors (alpha).
Comparative Levels are as previously presented in Table 3-1.
Sodium concentrations in the treated effluent are effected by chemical additions during processing.
* Constituent does not meet effluent quality criteria in treated wastewater.
** Calculated as described in Section 4.3.2.1

Footnotes in the Influent Concentration column indicate that the concentration that has been reported is less than the detection limit for that constituent using the EPA Method cited below.
Footnotes in the Effluent Concentration column indicate that the calculated concentration is lower than the detection limit using the EPA Method cited below. The detection limits are listed in the Effluent Concentration column when the calculated concentration was lower than the detection limit.

a. EPA Method 350.3
b. EPA Method 200.7
c. EPA Method 325.1
d. EPA Method 340.1
e. EPA Method 352.1
f. EPA Method 365.2
g. EPA Method 375.1
h. EPA Method 1624
i. EPA Method 202.2
j. EPA Method 204.2
k. EPA Method 206.2
l. EPA Method 213.2
m. EPA Method 220.2
n. EPA Method 239.2
o. EPA Method 270.2
p. EPA Method 272.2
q. EPA Method 289.2
r. EPA Method 602
s. EPA Method 601
t. ASTM-D2907-83
u. EPA Method 6010

IX = Ion Exchange
GAC = Granular Activated Carbon Adsorption
DF = Decontamination Factor

for this alternative. One shipment of secondary waste slurry to the GTF and up to 50 shipments of dewatered resin to the Hanford Central Waste Complex are anticipated on an annual basis.

**4.3.3.2.3 Optimization of Future/Existing Treatment Capability.** Implementation of Alternative B will require the installation of a microfilter, an IX battery, and a GAC adsorption system. This equipment can be installed in or near the existing 107-N Building. The current resin dewatering and loadout tank (Tank T-5), regeneration chemical storage tanks (T-2 and T-3) the 107-N Sand Filters, and the sand filter sludge loadout tank (Tank T-1) can be reused as in Alternative A. Existing waste transfer piping between the 105-N Fuel Basin area and the 107-N Building will be reused for recycling decontamination water. Additional transfer piping between the 105-N Lift Station and the 107-N Building, and between the 107-N Building and the 009 Outfall will be necessary. Additional new supporting equipment will include a 20 gal/min sump pump and agitator for the 105-N Lift Station, and two 18,000-gal discharge holding tanks for treated effluent.

**4.3.3.2.4 Maintenance and Reliability.** Routine maintenance and operation is required for Alternative B; however, this alternative is mechanically less complex than Alternative A due to the absence of the MVR evaporator. Maintenance for the filtration, IX, and GAC adsorption systems are as described for Alternative A.

As in Alternative A, the strong acid IX resin in Alternative B will require replacement or regeneration approximately 10 times per year for the column used to treat both wastewater and recycled decontamination water from the fuel basin. The strong acid IX columns used strictly for treatment of wastewater only are expected to require replacement or regeneration every 2 yr, at the assumed processing rate of 480,000 gal/yr.

Mechanical failure of any of the treatment equipment in Alternative B is not likely to significantly impact treated water quality. Equipment failure is more likely to cause wastewater flows to cease, preventing the discharge of untreated effluent.

**4.3.3.2.5 Safety and ALARA.** There are no unusual safety concerns associated with Alternative B. Minimal worker exposure to hazardous chemicals or conditions is anticipated. Radiation dose rates from the treatment of the 105-N Lift Station wastewater are expected to be minimal, and on the same order as those described for Alternative A. Dose rates encountered during the treatment and recycle of decontamination wastewater are also expected to be identical to those described in Alternative A.

**4.3.3.2.6 Flexibility.** All of the treatment operations used in Alternative B are relatively insensitive to variations in both flow and constituent concentrations. As in Alternative A, all treatment equipment has been sized to allow for a doubling in the effective flow rate with minimal impact upon equipment operation, and removal efficiencies for each of the treatment operations are not expected to be a strong function of stream composition at constituent concentrations. Based upon vendor recommended flow rates for the IX system, Alternative B can treat wastewater flows as small as 1 gal/min.

**4.3.3.2.7 Process Development Status.** Alternative B also relies solely upon well-established treatment technologies, and is anticipated to require a minimum level of site-specific process development activity. As noted in Alternative A, final IX resin selection should be based upon bench scale test results verifying that the desired DFs can be maintained with acceptably long operating periods between resin regeneration or replacement.

**4.3.3.2.8 Secondary Waste.** Secondary wastes produced by Alternative B are similar to those produced by Alternative A, with the exception that evaporator slurries are not produced. In Alternative B, additional IX wastes are generated through the use of extra IX batteries in lieu of the evaporator.

As in Alternative A, approximately 60 $ft^3$ of GAC will be expended in treating 480,000 gal of N Reactor wastewater. The GAC from Alternative B is also expected to be mixed waste, and will be discarded when expended instead of regenerated.

Approximately 7877 gal/yr (1053 $ft^3$/yr) of 18% by volume filter slurry will be generated by the combined N Reactor wastewater and 105-N Fuel Basin decontamination wastewater treatment processes. Therefore, the total cost for disposal of liquid wastes at the GTF is estimated to be $157,000 to $230,000/yr, using the same cost bases as Alternative A.

Approximately 973 $ft^3$ of waste would be generated through onsite stabilization as described in Alternative A. Assuming that the wastes would be low-level radioactive waste, the cost for disposal of the stabilized wastes would be over $230,000, including equipment costs.

Based upon the cost and volume estimates, and the relatively small volume of liquid waste that must be shipped, shipment of unstabilized liquid wastes to the GTF is also recommended for Alternative B.

Assuming that IX resins are regenerated, approximately 116,000 gal (15,500 $ft^3$) of IX regeneration waste would be generated on an annual basis by Alternative B. The regeneration wastes would contain aluminum and sodium in concentrations that exceed the concentrations allowed under the current GTF RCRA permit; assuming that treatment at the GTF was feasible, the minimum cost of treatment would be approximately $1.6 million per year.

In contrast, approximately 500 $ft^3$ of spent resin would be generated annually by Alternative A; this equates to approximately $5.2 \times 10^{-4}$ $ft^3$/gal wastewater treated. Disposal of 500 $ft^3$ of mixed waste would cost approximately $150,000/yr. Based upon these cost and volume estimates, disposal of spent resin is also recommended for Alternative B.

Assuming that the recommended management alternatives are chosen, Alternative B will generate approximately 560 $ft^3$ of solid mixed waste and 7877 gal of liquid waste that will require stabilization at the GTF.

**4.3.3.2.9 Cost.** Estimated costs for installing and operating Alternative B are provided in Table 4-6. The total present worth cost for Alternative B is estimated to be approximately $4.1 million.

Table 4-6. Cost Estimate Treatment Alternative B.

| Item | Unit Cost | Quantity | Subtotal | Total |
|---|---|---|---|---|
| Remove existing equipment | | | | |
| Demolition | $150/ft$^2$ | 300 ft$^2$ | $45,000 | |
| Disposal | $69/ft$^3$ | 212 ft$^3$ | $14,628 | |
| Process equipment (installed) | | | | |
| Filter (58.8 ft$^2$) | $42,000 ea | 1 | $42,000 | |
| Granulated activated carbon (35 ft$^3$) | $7,000 ea | 2 | $14,000 | |
| Ion exchange (13 ft$^3$) | $31,500 ea | 8 | $252,000 | |
| Discharge tanks (18 kgal) | $70,000 ea | 2 | $140,000 | |
| Pumps | $11,200 LS | 1 | $11,200 | |
| Piping | | | | |
| Piping to 009 Outfall | $82/ft | 875 ft | $71,750 | |
| Piping to 107-N | $82/ft | 600 ft | $49,200 | |
| Subtotal | | | | $639,778 |
| Instrumentation and miscellaneous hookups @ 15% | | | | $95,967 |
| Engineering @ 27% | | | | $172,740 |
| Contract administration @ 16% | | | | $102,364 |
| Project management @ 15% | | | | $95,967 |
| Contingency @ 30% | | | | $191,933 |
| Total Installed Equipment | | | | $1,298,749 |
| Annual operating costs | | | | |
| Treatment secondary waste disposal | | | | |
| Spent granulated activated carbon | $300/ft$^3$ | 59 ft$^3$ | 17,700 | * |
| Spent resin | $300/ft$^3$ | 303 ft$^3$ | $90,900 | * |
| Filter solids | $22/gal | 639 gal | $14,058 | * |
| Decon water recycle secondary waste disposal | | | | |
| Spent resin | $300/ft$^3$ | 193 ft$^3$ | $57,900 | * |
| Filter solids | $22/gal | 7239 gal | $159,258 | ** |
| Secondary waste shipment | | | | |
| Railcar load/unload | $5/gal | 7878 gal | $39,390 | |
| Railcar operation | $7,200/d | 1 d | $7,200 | |
| Maintenance (10% Equipment) | $63,978 LS | 1 | $63,978 | |
| Outfall analyses | $4,000 ea | 4 | $16,000 | |
| Operations | $45/h | 2800 h | $126,000 | |
| Subtotal | | | | $592,384 |
| TOTAL PRESENT WORTH FOR ALTERNATIVE | | | | $4,122,643 |

LS = Lump sum
*Based on 480,000 gal/yr effluent
**Based on 25,200,000 gal/yr effluent
(1050 gal/min for 400 h)

**4.3.3.3 Evaluation of Alternative C.**

**4.3.3.3.1 Effectiveness.** The predicted effluent quality for Alternative C is tabulated in Table 4-7. A total of 43 toxic equivalent lb/yr are removed by Alternative C.

Because organic treatment capability is not provided, organic compounds are not removed in Alternative C. Therefore, final concentrations of trichloromethane and tetrachloroethene exceed effluent comparative levels. Heavy metal ions and other inorganic compounds are removed by filtration and IX. Four IX beds in series provide a DF of about 10,000. Filtration DFs are variable, based on the individual compound. As with Alternative B, comparative effluent levels are exceeded for tritium at the point of discharge.

**4.3.3.3.2 Schedule.** Schedule considerations are identical to those described in Section 4.3.3.2.2 for Alternative B.

**4.3.3.3.3 Optimization of Future/Existing Treatment Capability.** Equipment requirements are identical to those described in Alternative B. As with Alternative B, Alternative C will use the existing 107-N Building and its currently installed equipment to the maximum extent possible.

**4.3.3.3.4 Maintenance and Reliability.** Maintenance and reliability considerations are identical to those described in Section 4.3.3.2.4 for Alternative B, with the exception that operation and maintenance of a GAC system are not required. This difference is not anticipated to significantly improve maintenance and reliability considerations for Alternative C.

**4.3.3.3.5 Safety and ALARA.** Safety and ALARA considerations are identical to those described in Section 4.3.3.2.5 for Alternative B, with the exception that spent GAC will not be handled.

**4.3.3.3.6 Flexibility.** Flexibility considerations are identical to those described in Section 4.3.3.2.6 for Alternative B.

**4.3.3.3.7 Process Development Status.** Process development considerations are identical to those described in Section 4.3.3.2.7 for Alternative B.

**4.3.3.3.8 Secondary Waste.** Secondary waste handling considerations are identical to those described in Section 4.3.3.2.8 for Alternative B, with the exception that spent GAC will not be generated.

Therefore, Alternative C will generate approximately 500 $ft^3$ of solid mixed waste and 7877 gal of liquid waste which will require stabilization at the GTF.

**4.3.3.3.9 Cost.** Estimated costs for installing and operating Alternative C are provided in Table 4-8. The total present worth cost for Alternative C is estimated to be approximately $4.0 million.

# Table 4-7. Alternative C Effluent Quality.

80 mg/L of Hardness
10 gal/min
800 hr/yr of Operation

| Chemical | Influent Conc. (ug/L) | Removal DFs: Filtration (DF) | Removal DFs: IX (DF) | Removal DFs: Overall (DF) | Effluent Conc. (ug/L) | Effluent Comparative Levels: Chronic (ug/L) | Effluent Comparative Levels: Acute (ug/L) | Toxic Lbs Removed (lbs/yr)** |
|---|---|---|---|---|---|---|---|---|
| **INORGANICS** | | | | | | | | |
| Ammonia (Total N) | 2.23E+02 | 1 | 10000 | 5.10E+03 | 5.00E+01 (a) | 2.00E+03 | 1.65E+04 | 4.00E-03 |
| Ammonia | 3.00E+00 | 1 | | 1.37E+02 | 2.18E-02 | | | |
| Ammonium | 2.20E+02 | 1 | | 1.01E+04 | 2.18E-02 | | | |
| Aluminum | 3.80E+01 | 7.1 | 10000 | 7.10E+04 | 3.00E+00 (i) | 5.00E+01 | | 2.32E-02 |
| Antimony | 1.40E+01 | 1.1 | 10000 | 1.10E+04 | 3.00E+00 (j) | 1.60E+03 | 9.00E+03 | 3.35E-04 |
| Arsenic | 1.30E+01 | 1.1 | 10000 | 1.10E+04 | 1.00E+00 (k) | 1.90E+02 | 3.60E+02 | 3.67E-03 |
| Barium | 1.04E+02 | 1.3 | 10000 | 1.30E+04 | 2.00E+00 (b) | 1.00E+03 | | 3.18E-03 |
| Boron | 8.34E+01 | 1.1 | 10000 | 1.10E+04 | 5.00E+00 (b) | | | |
| Cadmium | 3.00E+00 | 1.3 | 10000 | 1.30E+04 | 4.00E+00 (l) | 7.59E-01 | 2.20E+00 | 1.80E-01 |
| Calcium | 2.28E+04 | 1 | 10000 | 1.00E+04 | 1.00E+01 (b) | | | |
| Chloride | 2.60E+03 | 1 | 10000 | 1.00E+04 | 1.00E+02 (c) | 2.50E+05 | | 3.18E-04 |
| Chromium | 6.00E+00 (b) | 5.1 | 10000 | 5.10E+04 | 7.00E+00 (b) | 1.10E+01 | 1.60E+01 | 3.31E-02 |
| Cobalt | 0.00E+00 (b) | 1 | 10000 | 1.00E+00 | 7.00E+00 (b) | | | |
| Copper | 3.00E+01 | 2.3 | 10000 | 2.30E+04 | 1.00E+00 (m) | 7.64E+00 | 1.10E+01 | 2.39E-01 |
| Fluoride | 2.04E+02 | 1 | 10000 | 1.00E+04 | 1.00E+02 (d) | 4.00E+03 | | 1.56E-03 |
| Iron | 1.79E+02 | 17.3 | 10000 | 1.73E+05 | 7.00E+00 (b) | 1.00E+03 | | 5.47E-03 |
| Lead | 3.90E+01 | 2.7 | 10000 | 2.70E+04 | 1.00E+00 (n) | 1.66E+00 | 4.26E+01 | 7.58E-01 |
| Magnesium | 6.81E+03 | 1 | 10000 | 1.00E+04 | 3.00E+01 (b) | | | |
| Manganese | 8.69E+01 | 3 | 10000 | 3.00E+04 | 2.00E+00 (b) | 5.00E+01 | | 5.31E-02 |
| Nickel | 9.00E+00 (b) | 1.2 | 10000 | 1.20E+04 | 1.50E+01 (b) | 1.02E+02 | 9.21E+02 | 3.11E-03 |
| Nitrate | 4.36E+02 | 1 | 10000 | 1.00E+04 | 1.00E+02 (e) | 1.00E+04 | | 1.34E-03 |
| Phosphorous | 2.00E+01 (f) | 1 | 10000 | 1.00E+04 | 1.00E+02 (f) | | | |
| Potassium | 3.53E+03 | 1.2 | 10000 | 1.20E+04 | 5.00E+02 (b) | | | |
| Selenium | 4.20E+01 | 1 | 10000 | 1.00E+04 | 2.00E+00 (o) | 3.50E+01 | 2.60E+02 | 4.37E-02 |
| Silicon | 2.04E+03 | 10 | 10000 | 1.00E+05 | 5.80E+01 (b) | | | |
| Silver | 5.00E-01 | 1.2 | 10000 | 1.20E+04 | 2.00E-01 (p) | 1.20E-01 | 1.69E+00 | 1.40E-01 |
| Sodium | 1.97E+04 | 1 | 10000 | 2.61E-02 | 7.55E+05 | | | |
| Strontium | 8.73E+01 | 1.1 | 10000 | 1.10E+04 | 2.00E+01 (u) | | | |
| Sulfate | 1.21E+04 | 1 | 10000 | 1.00E+04 | 2.50E+03 (g) | 2.50E+05 | | 1.48E-03 |
| Uranium | 2.84E+00 | 10 | 10000 | 1.00E+05 | 1.00E+00 (t) | | | |
| Vanadium | 6.10E+00 (b) | 1 | 10000 | 1.00E+04 | 8.00E+00 (b) | | | |
| Zinc | 1.21E+01 | 2.2 | 10000 | 2.20E+04 | 5.00E-02 (q) | 6.98E+01 | 7.59E+01 | 1.24E-02 |
| **ORGANICS** | | | | | | | | |
| Acetone | 1.73E+01 (h) | 1.3 | 1 | 1.30E+00 | 5.00E+01 (h) | | | |
| 1-butanol | 3.62E+01 | 1 | 1 | 1.00E+00 | 3.62E+01 | | | |
| 2-butanone | 2.91E+01 (h) | 1 | 1 | 1.00E+00 | 5.00E+01 (h) | | | |
| BHT | 1.35E+01 | 1 | 1 | 1.00E+00 | 1.35E+01 | | | |
| Hexone (MIBK) | 1.03E+01 | 1.5 | 1 | 1.50E+00 | 6.87E+00 | | | |
| Toluene | 5.36E+00 | 1 | 1 | 1.00E+00 | 5.36E+00 | 1.43E+04 | 1.75E+04 | 0.00E+00 |
| Trichloromethane | 5.19E+00 | 1 | 1 | 1.00E+00 | 5.19E+00 * | 1.24E+03 | 2.89E+04 | 0.00E+00 |
| Tetrachloroethene | 1.00E+00 | 1 | 1 | 1.00E+00 | 1.00E+00 * | 8.40E+02 | 5.29E+03 | 0.00E+00 |
| **RADIONUCLIDES** | (pCi/L) | | | | | (pCi/L) | | |
| Total Alpha | 4.99E+01 | 10 | 10000 | 1.00E+05 | 4.99E-04 | | | |
| Total Beta | 1.65E+06 | 1 | 9344 | 8.34E+03 | 1.77E+02 | | | |
| Am-241 | 7.03E+01 | 10 | 10000 | 1.00E+05 | 7.03E-04 | 3.00E+01 | | 5.25E-02 |
| Cm-242 | 4.93E-01 | 10 | 10000 | 1.00E+05 | 4.93E-06 | 1.00E+03 | | 1.10E-05 |
| Cm-244 | 8.92E-01 | 10 | 10000 | 1.00E+05 | 8.92E-06 | 6.00E+01 | | 3.33E-04 |
| Co-60 | 7.00E+03 | 7.4 | 10000 | 7.40E+04 | 9.46E-02 | 1.00E+04 | | 1.57E-02 |
| Cs-134 | 1.67E+03 | 1.1 | 10000 | 1.10E+04 | 1.52E-01 | 2.00E+03 | | 1.87E-02 |
| Cs-137 | 4.71E+05 | 1.1 | 10000 | 1.10E+04 | 4.28E+01 | 3.00E+03 | | 3.51E+00 |
| C-14 | 4.24E+01 | 1 | 1 | 1.00E+00 | 4.24E+01 | 7.00E+04 | | 0.00E+00 |
| H-3 | 5.54E+06 | 1 | 1 | 1.00E+00 | 5.54E+06 * | 2.00E+06 | | 0.00E+00 |
| Mn-54 | 6.04E+03 | 3 | 10000 | 3.00E+04 | 2.01E-01 | 5.00E+04 | | 2.70E-03 |
| Pb-210 | 2.97E+01 | 2.7 | 10000 | 2.70E+04 | 1.10E-03 | 3.00E+01 | | 2.22E-02 |
| Pu-238 | 1.09E+01 | 10 | 10000 | 1.00E+05 | 1.09E-04 | 4.00E+01 | | 6.10E-03 |
| Pu-239/240 | 6.66E+01 | 10 | 10000 | 1.00E+05 | 6.66E-04 | 3.00E+01 | | 4.97E-02 |
| Radium | 3.30E-01 | 10 | 10000 | 1.00E+05 | 3.30E-06 | 1.00E+02 | | 7.39E-05 |
| Ru-106 | 1.72E+04 | 1.7 | 10000 | 1.70E+04 | 1.01E+00 | 6.00E+03 | | 6.42E-02 |
| Sr-90 | 1.76E+06 | 1.1 | 10000 | 1.10E+04 | 1.60E+02 * | 1.00E+03 | | 3.94E+01 |
| U-234 | 1.80E+00 | 10 | 10000 | 1.00E+05 | 1.80E-05 | 5.00E+02 | | 7.16E-05 |
| U-235 | 2.17E-01 | 10 | 10000 | 1.00E+05 | 2.17E-06 | 6.00E+02 | | 8.10E-06 |
| U-238 | 1.13E+00 | 10 | 10000 | 1.00E+05 | 1.13E-05 | 6.00E+02 | | 4.22E-05 |
| | | | | | Total Toxic Pounds Removed per Year | | | 43.150 |

Toxic pounds removed per year is based on the design stream flow of 1,816,800 L/yr (480,000 gal/yr).
Organic DFs for evaporation are based on relative volatility factors (alpha).
Comparative Levels are as previously presented in Table 3-1.
Sodium concentrations in the treated effluent are effected by chemical additions during processing.
* Constituent does not meet effluent quality criteria in treated wastewater.
** Calculated as described in Section 4.3.2.1.

Footnotes in the Influent Concentration column indicate that the concentration that has been reported is less than the detection limit for that conc using the EPA Method cited below.
Footnotes in the Effluent Concentration column indicate that the calculated concentration is lower than the detection limit using the EPA Method c The detection limits are listed in the Effluent Concentration column when the calculated concentration was lower than the detection limit.

a. EPA Method 350.3
b. EPA Method 200.7
c. EPA Method 325.1
d. EPA Method 340.1
e. EPA Method 352.1
f. EPA Method 365.2
g. EPA Method 375.1
h. EPA Method 1624
i. EPA Method 202.2
j. EPA Method 204.2
k. EPA Method 206.2
l. EPA Method 213.2
m. EPA Method 220.2
n. EPA Method 239.2
o. EPA Method 270.2
u. EPA Method 6010

IX = Ion Exchange
DF = Decontamination Factor

Table 4-8. Cost Estimate Treatment Alternative C.

| Item | Unit Cost | Quantity | Subtotal | | Total |
|---|---|---|---|---|---|
| Remove existing equipment | | | | | |
| Demolition | $150/ft$^2$ | 300 ft$^2$ | $45,000 | | |
| Disposal | $69/ft$^3$ | 212 ft$^3$ | $14,628 | | |
| Process equipment (installed) | | | | | |
| Filter (58.8 ft$^2$) | $42,000 ea | 1 | $42,000 | | |
| Ion exchange (13 ft$^3$) | $31,500 ea | 8 | $252,000 | | |
| Discharge tanks (18 kgal) | $70,000 ea | 2 | $140,000 | | |
| Pumps | $11,200 LS | 1 | $11,200 | | |
| Piping | | | | | |
| Piping to 009 Outfall | $82/ft | 875 ft | $71,750 | | |
| Piping to 107-N | $82/ft | 600 ft | $49,200 | | |
| Subtotal | | | | | $625,778 |
| Instrumentation and miscellaneous hookups @ 15% | | | | | $93,867 |
| Engineering @ 27% | | | | | $168,960 |
| Contract administration @ 16% | | | | | $100,124 |
| Project management @ 15% | | | | | $93,867 |
| Contingency @ 30% | | | | | $187,733 |
| Total Installed Equipment | | | | | $1,270,329 |
| Annual operating costs | | | | | |
| Treatment secondary waste disposal waste disposal | | | | | |
| Spent resin | $300/ft$^3$ | 303 ft$^3$ | $90,900 | * | |
| Filter solids | $22/gal | 639 gal | $14,058 | * | |
| Decon water recycle secondary waste disposal | | | | | |
| Spent resin | $300/ft$^3$ | 193 ft$^3$ | $57,900 | * | |
| Filter solids | $22/gal | 7239 gal | $159,258 | ** | |
| Secondary waste shipment | | | | | |
| Railcar load/unload | $5/gal | 7878 gal | $39,390 | | |
| Railcar operation | $7,200/d | 1 d | $7,200 | | |
| Maintenance (10% Equipment) | $62,578 LS | 1 | $62,578 | | |
| Outfall analyses | $4,000 ea | 4 | $16,000 | | |
| Operations | $45/h | 2800 h | $126,000 | | |
| Subtotal | | | | | $573,284 |
| TOTAL PRESENT WORTH FOR ALTERNATIVE | | | | | $4,003,173 |

LS = Lump sum
*Based on 480,000 gal/yr effluent
**Based on 25,200,000 gal/yr effluent
(1050 gal/min for 400 h)

## 4.4 RECOMMENDED ALTERNATIVE

Each of the alternatives was scored as described in Section 4.3.2 using the considerations presented in Section 4.3.3. The results of this comparison are provided in Table 4-9. Based upon the scores presented in Table 4-9, Alternative B has been selected as the recommended treatment alternative.

Table 4-9. Alternative Reading.

| | | Alternative A | | Alternative B | | Alternative C | |
|---|---|---|---|---|---|---|---|
| Criteria | Weight | Score | Score x Wt. | Score | Score x Wt. | Score | Score x Wt. |
| Effectiveness | 20 | 4 | 80 | 3 | 60 | 2 | 40 |
| Schedule | 10 | 4 | 40 | 4 | 40 | 4 | 40 |
| Optimization | 15 | 2 | 30 | 3 | 45 | 3 | 45 |
| Maintenance/Reliability | 15 | 3 | 45 | 4 | 60 | 4 | 60 |
| Safety/ALARA | 20 | 3 | 60 | 3 | 60 | 3 | 60 |
| Flexability | 10 | 3 | 30 | 4 | 40 | 4 | 40 |
| Process Development Status | 5 | 4 | 20 | 4 | 20 | 4 | 20 |
| Secondary Waste | 15 | 4 | 60 | 3 | 45 | 3 | 45 |
| Costs | 10 | 3 | 30 | 4 | 40 | 4 | 40 |
| TOTALS | | | 395 | | 410 | | 390 |

This page intentionally left blank.

# 5.0 PROPOSED TREATMENT SYSTEM

## 5.1 PROCESS DESCRIPTION

This section contains a more detailed description of the proposed treatment system for the N Reactor wastewater. The process flow diagram (PFD) for the proposed treatment system is provided in Figure 5-1.

The proposed treatment system consists of two interrelated processes. One process is used to treat wastewater for disposal to the Columbia River, while the second is used to treat wastewater from decontamination activities for recycle back to the 105-N Fuel Basin area.

### 5.1.1 Treatment of Wastewater for Discharge to the Columbia River

This section describes the proposed system for treating N Reactor wastewater for discharge to the Columbia River.

**5.1.1.1 Wastewater Collection and Equalization.** Wastewater from the 105-N and 109-N Buildings will be accumulated in the existing 105-N Lift Station until a sufficient volume of wastewater has been collected to allow processing. As previously described, the 105-N Lift Station is a concrete sump with a steel liner, sized to hold up to 100,000 gal of wastewater with a working volume based upon the extent of the steel liner of approximately 54,000 gal. The maximum flow rate to the 105-N Lift Station will occur if the 105-N or 109-N Building fire suppression systems are activated. If activated, up to 1300 gal/min of wastewater could flow to the 105-N Lift Station over a 4-h period. At this maximum flow rate, the lift station can accumulate up to 1.25 h of fire suppression system runoff, assuming that the entire capacity of the 105-N Lift Station is used; additional capacity can be provided by transferring excess water from the 105-N Lift Station to the 105-N Fuel Basin. During building decontamination activities, up to 20 gal/min of wastewater will be generated. At this flow rate, wastewater from up to 45 h of continuous building decontamination can be contained in the working volume of the 105-N Lift Station.

The 105-N Lift Station will be fitted with a sump-type pump that will allow the transfer of up to 20 gal/min of wastewater to the treatment process in the 107-N Building, with a nominal treatment flow rate under normal operating conditions of 10 gal/min. The 105-N Lift Station will also be fitted with an agitator to ensure that the contents of the lift station are well mixed.

The system feed pump will be interlocked to level sensors on the treated effluent accumulation tanks to prevent operation of the treatment system when the accumulation tanks are full. The system will also be interlocked to prevent the simultaneous treatment of wastewater for discharge to the Columbia River and treatment of decontamination waste for recycle to the 105-N Fuel Basin Area.

Figure 5-1. Process Flow Diagram.

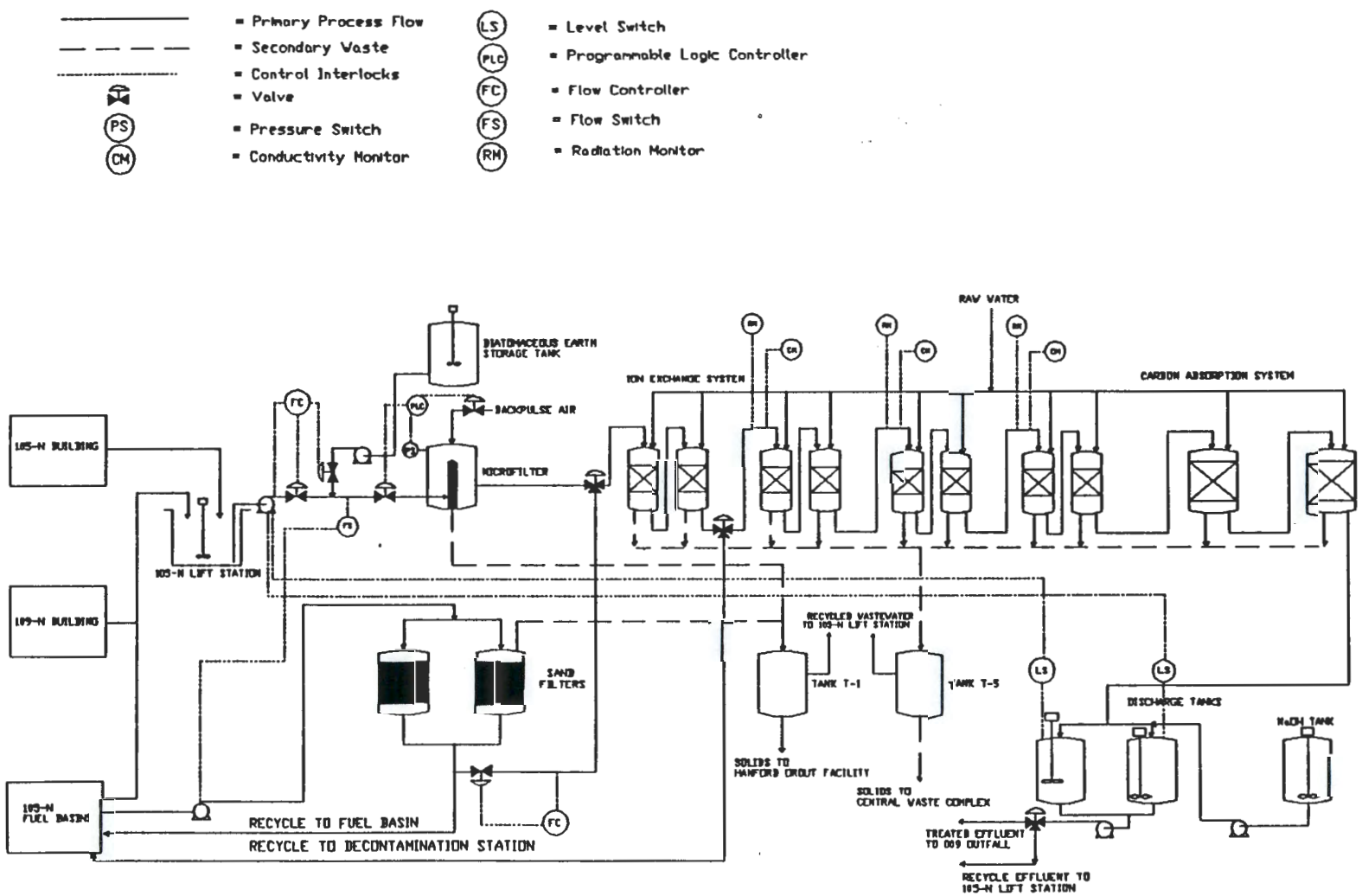

Provisions will be made to allow the recycle of treated effluent that does not meet discharge specifications back to the 105-N Lift Station for further processing. Wastewater will also be recycled to the 105-N Lift station from the 107-N Building sump, the T-1 Settling Tank, and the T-5 Resin Dewatering Tank.

**5.1.1.2 Wastewater Filtration.** Wastewater will be pumped from the 105-N Lift Station to a microfilter consisting of a sintered metal element within a stainless steel American Society of Mechanical Engineers (ASME) Code housing. Filtration will occur on the inside surfaces of the filter element, while filtered wastewater will accumulate on the shell side of the filter. The filter element will have approximately 60 $ft^2$ of active filtration area, and will be rated at a nominal 2.0 $\mu m$.

To enhance solids removal, both a precoat and body feed will be used. Before filtering any N Reactor wastewater, a slurry of filter aid (such as diatomaceous earth) in clean water will be run through the filter, building up a porous cake which enhances the performance of the filter element. Approximately 0.1 to 0.2 $lb/ft^2$ of precoat per unit of filter area will be used. This precoat will also be applied to the filter element following each filter back-flush.

Filter aid will also be added to the incoming N Reactor wastewater stream as body feed to enhance filtration. Body feed will be used at a concentration of 2 to 10 ppm filter aid in the wastewater flowing to the filter.

When solids accumulate to the point where filter performance is impaired, as determined by the differential pressure measured across the filter element, the filter will be automatically back-flushed. The back-flush will consist of approximately 100 gal of filtered wastewater and potable water pulsed through the filter element with compressed air.

Solids from the filter will be discharged to the existing T-1 Settling Tank in the 107-N Facility to await transfer to the GTF. The solid slurries will be transported to the GTF by railcar; existing piping from the T-1 Tank to the N Reactor Railcar Facility will be used to load the solid slurry into railcars for transfer. At the assumed TSS loading in the influent wastewater, it is estimated that the filter will be back-flushed once every 78,000 gal of wastewater processed, based upon previous data for similar filters tested on the N Reactor effluent.

**5.1.1.3 Ion Exchange Treatment.** Wastewater will flow from the filter shell through four pairs of strong acid cation and weak base anion exchange columns in series. Each IX column will be a steel ASME Code pressure vessel, and will contain 10 to 15 $ft^3$ of IX resin. Radiation levels and conductivity in the effluent will be monitored between each of the pairs of IX columns to detect when the resin bed has been expended.

When the resin has been expended (signified by a sharp rise in conductivity and/or radiation levels in the treated effluent), the expended resin will be hydraulically displaced using potable water and transferred to the T-5 Resin Dewatering Tank. The resin will be drained of free liquid and packaged into 55-gal drums for shipment to the Central Waste Complex using this existing tank and load-out facility.

Deionization in the cation exchange columns will cause a significant change in the pH of the treated wastewater. It is estimated that the pH will drop from 7.4 in the influent to approximately 3.5 at the discharge of the IX columns.

**5.1.1.4 Granulated Activated Carbon Treatment.** Wastewater will flow from the IX system to two GAC treatment units in series. Each unit will consist of an ASME Code pressure vessel containing approximately 35 $ft^3$ of activated carbon. Samples will be periodically collected between each carbon unit and at the discharge and analyzed for total organic carbon (TOC) to detect when the GAC has been expended.

When the GAC has been expended (signified by a sharp rise in TOC levels in the treated effluent), the expended GAC will be hydraulically displaced using potable water and transferred to the T-5 Resin Dewatering Tank. The GAC will be drained of free liquid and packaged into 55-gal drums for shipment to the Central Waste Complex using this existing tank and load-out facility.

**5.1.1.5 Treated Effluent Collection and Neutralization.** Treated effluent will be collected in one of two new tanks located to the south of the 107-N Building. These tanks will each have a working volume of 15,000 gal and will have level sensing elements which will be interlocked to the 105-N Lift Station pump. This interlock will prevent overflow of a full tank.

The pH of the effluent will be adjusted through the addition of sodium hydroxide before discharge. Treated effluent will be pumped from the collection tanks to the 009 Outfall at a rate of 100 gal/min, where it will be discharged to the Columbia River.

**5.1.1.6 Predicted Treated Effluent Characteristics.** A summary of the average predicted treated effluent characteristics after pH adjustment is provided in Table 5-1. Two different compositions are provided. One composition is after treatment and pH adjustment, but before combination with other streams discharging to the 009 Outfall. The second composition is that discharged to the Columbia River, assuming a discharge rate of 100 gal/min to the 009 Outfall from the effluent collection tanks, and an minimum current 009 Outfall discharge rate of 60 gal/min.

The effluent compositions presented in Table 5-1 have been predicted based upon the assumed average wastewater composition presented in Tables 2-4 and 2-5 for the N Reactor wastewater, and upon typical DFs reported by the EPA, treatment equipment vendors consulted for this application, and other published data. The results of radionuclide treatability tests conducted on the N Reactor wastewater in 1986 and 1987 have been used where appropriate. For these reasons, the predicted effluent composition should be considered an estimate of treatment performance, subject to verification through treatability testing and further characterization of the N Reactor wastewater.

Effluent comparative levels are exceeded for tritium in the effluent from the N Reactor wastewater treatment system. Recent detailed compositional data are not available for the wastewater currently discharged to the Columbia River through the 009 Outfall. Therefore, the current 009 Outfall discharge has been assumed to have a composition based upon ambient Columbia River conditions and the composition of the filtered water supply. Some of the

## Table 5-1. Estimated Effluent Composition at Discharge to Columbia River.

| Chemical | Treated N-Reactor Effluent (ug/L) | Current 009 Outfall (ug/L) | Estimated Concentrations in Discharge to River (ug/L) | Analytical Detection Limit (ug/L) | Effluent Comparative Levels Chronic (ug/L) | Effluent Comparative Levels Acute (ug/L) | Required Reduction Factor in Mixing Zone |
|---|---|---|---|---|---|---|---|
| **INORGANICS** | | | | | | | |
| Ammonia (Total N) | 2.20E-02 + | 6.00E+01 * | 2.25E+01 + | 5.00E+01 | 2.00E+03 | 1.65E+04 | |
| Aluminum | 5.35E-04 + | 2.56E+01 | 9.60E+00 + | 3.00E+00 | 5.00E+01 | | |
| Antimony | 1.27E-03 + | | 7.94E-04 + | 3.00E+00 | 1.60E+03 | 9.00E+03 | |
| Arsenic | 1.18E-03 + | 1.20E+00 * | 4.51E-01 + | 1.00E+00 | 1.90E+02 | 3.60E+02 | |
| Barium | 6.00E-03 + | 2.65E+01 * | 9.94E+00 | 2.00E+00 | 1.00E+03 | | |
| Boron | 7.58E-03 + | | 4.74E-03 + | 5.00E+00 | | | |
| Cadmium | 2.31E-04 + | 2.40E+00 *** | 9.00E-01 ##+ | 1.00E-01 | 7.59E-01 | 2.20E+00 | 1.19 |
| Calcium | 2.28E+00 + | 1.64E+04 * | 6.16E+03 | 1.00E+01 | | | |
| Chloride | 2.60E-01 + | 1.98E+03 * | 7.43E+02 | 1.00E+02 | 2.50E+05 | | |
| Chromium | 1.18E-04 + | | 7.38E-05 + | 7.00E+00 | 1.10E+01 | 1.60E+01 | |
| Copper | 1.30E-03 + | 1.06E+01 *** | 3.98E+00 + | 1.00E+00 | 7.64E+00 | 1.10E+01 | |
| Fluoride | 2.04E-02 + | 1.00E+02 * | 3.75E+01 + | 1.00E+02 | 4.00E+03 | | |
| Iron | 1.03E-03 + | 5.07E+01 * | 1.90E+01 | 7.00E+00 | 1.00E+03 | | |
| Lead | 1.44E-03 + | | 9.00E-04 + | 1.00E+00 | 1.66E+00 | 4.26E+01 | |
| Magnesium | 6.81E-01 + | 3.65E+03 * | 1.37E+03 | 3.00E+01 | | | |
| Manganese | 2.90E-03 + | 6.78E+00 * | 2.54E+00 | 2.00E+00 | 5.00E+01 | | |
| Nickel | 7.50E-04 + | 8.00E+00 * | 3.00E+00 | 1.50E+01 | 1.02E+02 | 9.21E+02 | |
| Nitrate | 4.36E-02 + | 9.96E+02 *** | 3.74E+02 | 1.00E+02 | 1.00E+04 | | |
| Phosphorous | 2.00E-03 + | 2.00E+01 * | 7.50E+00 + | 1.00E+02 | | | |
| Potassium | 2.94E-01 + | 6.41E+02 * | 2.40E+02 + | 5.00E+02 | | | |
| Selenium | 4.20E-03 + | | 2.63E-03 + | 2.00E+00 | 3.50E+01 | | |
| Silicon | 2.04E-02 + | 1.84E+03 * | 6.91E+02 | 5.60E+01 | | | |
| Silver | 4.17E-05 + | | 2.61E-05 + | 2.00E-01 | 1.20E-01 | 1.69E+00 | |
| Sodium | 7.54E+05 | 1.63E+03 * | 4.72E+05 + | 7.54E+05 | | | |
| Strontium | 7.94E-03 + | 8.30E+01 * | 3.11E+01 | 2.00E+01 | | | |
| Sulfate | 1.21E+00 + | 1.06E+04 *** | 3.98E+03 | 2.50E+03 | 2.50E+05 | | |
| Uranium | 2.84E-05 + | 8.08E-01 * | 3.03E-01 | 1.00E+00 | | | |
| Vanadium | 6.10E-04 + | 1.62E+00 *,+ | 6.08E-01 + | 8.00E+00 | | | |
| Zinc | 5.50E-04 + | 5.75E+00 * | 2.16E+00 | 5.00E-02 | 6.88E+01 | 7.59E+01 | |
| **ORGANICS** | | | | | | | |
| Acetone | 1.33E+01 + | | 8.31E+00 + | 5.00E+01 | | | |
| 1-butanol | 3.62E-01 | | 2.26E-01 | | | | |
| 2-butanone | 2.91E-01 + | | 1.82E-01 + | 5.00E+01 | | | |
| BHT | 1.35E-01 | | 8.44E-02 | | | | |
| Hexone (MIBK) | 6.87E-02 | | 4.29E-02 | | | | |
| Toluene | 5.36E-02 + | | 3.35E-02 + | 2.00E-01 | 1.43E+04 | 1.75E+04 | |
| Trichloromethane | 5.19E-02 | 1.18E+01 *** | 4.46E+00 ## | 5.00E-02 | 1.24E+03 | 2.89E+04 | |
| Tetrachloroethene | 1.00E-02 + | | 6.25E-03 + | 3.00E-02 | 8.40E+02 | 5.28E+03 | |
| **RADIONUCLIDES** * | (pCi/L) | (pCi/L) | | | | | |
| Total Alpha | 4.99E-04 | 7.60E-01 | 2.85E-01 | | | | |
| Total Beta | 1.77E+02 | 9.60E-01 | 1.11E+02 | | | | |
| Am-241 | 7.03E-04 | | 4.39E-04 | | 3.00E+01 | | |
| Cm-242 | 4.93E-06 | | 3.08E-06 | | 1.00E+03 | | |
| Cm-244 | 8.92E-06 | | 5.58E-06 | | 6.00E+01 | | |
| Co-60 | 9.46E-02 | | 5.91E-02 | | 1.00E+04 | | |
| Cs-134 | 1.52E-01 | | 9.50E-02 | | 2.00E+03 | | |
| Cs-137 | 4.28E+01 | | 2.68E+01 | | 3.00E+03 | | |
| C-14 | 4.24E+01 | | 2.65E+01 | | 7.00E+04 | | |
| H-3 | 5.54E+06 | 3.74E+02 * | 3.46E+06 # | | 2.00E+06 | | 1.73 |
| Mn-54 | 2.01E-01 | | 1.26E-01 | | 5.00E+04 | | |
| Pb-210 | 1.10E-03 | | 6.88E-04 | | 3.00E+01 | | |
| Pu-238 | 1.09E-04 | 1.32E-01 * | 4.96E-02 | | 4.00E+01 | | |
| Pu-239/240 | 6.66E-04 | 7.00E-02 * | 2.67E-02 | | 3.00E+01 | | |
| Radium | 3.30E-06 | 1.42E-01 * | 5.33E-02 | | 1.00E+02 | | |
| Ru-106 | 1.01E+00 | | 6.31E-01 | | 6.00E+03 | | |
| Sr-90 | 1.60E+02 | 3.84E-01 * | 1.00E+02 | | 1.00E+03 | | |
| U-234 | 1.60E-05 | | 1.00E-05 | | 5.00E+02 | | |
| U-235 | 2.17E-06 | | 1.36E-06 | | 6.00E+02 | | |
| U-238 | 1.13E-05 | 5.50E-01 ** | 2.06E-01 | | 6.00E+02 | | |

Assumed current 009 Outfall Flow 60 gal/min
Assumed treated effluent discharge 100 gal/min

In cases where no data are available for Columbia River or 009 Outfall, discharge concentrations are assumed to be those in the treated effluent

* Concentration assumed is average Columbia River Concentration
** Concentration assumed is average total uranium for Columbia River
*** Concentration assumed is average filtered water concentration (1986-1987)
\# Exceeds Effluent Comparative Level at discharge due to discharge from treatment system
\## Exceeds Effluent Comparative Level due to assumed concentration in current 009 Outfall
\+ Estimated concentration is below analytical detection limit

constituent concentrations assumed for the 009 Outfall exceed the effluent comparative levels identified in Table 3-1. These constituents include cadmium and copper. For both cadmium and copper, the assumed 009 Outfall concentrations are based upon data from supply water samples collected in the 200 Area of the Hanford Site in 1986 and 1987 (WHC 1990a). Using this assumption, cadmium concentrations would exceed the effluent comparative levels in the combined effluent at the point of discharge. However, if it is assumed that cadmium and copper concentrations in the current 009 Outfall are the same as ambient Columbia River concentrations, effluent comparative levels are not exceeded in the combined effluent discharges to the Columbia River.

In 1998, the majority of the discharged effluent will be treated wastewater from the 105-N Fuel Basin. Treated effluent is anticipated to contain iron, (nonradioactive) strontium, barium, aluminum, boron, silicon, chromium, copper, nickel, selenium, zinc, and most radionuclides at concentrations approximately one order of magnitude greater than the discharges noted in Table 5-1 due to carry-over of basin sediments. Even at these increased levels, the chemical concentrations will still be below the analytical detection limits listed in Table 5-1. Neither the treated or combined effluent discharge will exceed effluent comparative levels for these constituents under normal process conditions.

Discharges in 1998 will also contain substantially more tritium. After decay correction, the tritium concentration in treated N Reactor effluent is anticipated to be approximately $1.26 \times 10^7$ pCi/L. At the point of discharge, after combination with the wastewater currently discharged through the 009 Outfall, tritium concentrations will be approximately $7.88 \times 10^6$ pCi/L, or about 2.3 times the values shown in Table 5-1.

DOE Order 5400.5 states that facility discharges shall not cause private or public water systems downstream of the discharge to exceed the 40 CFR 141 radiological exposure limit of 4 mrem/yr. Dose conversion factors are available that allow offsite doses to be estimated from effluent concentrations and total volumes of effluent released (WHC 1991c). During FY 1998, when the maximum concentrations of radionuclides will be discharged, incremental increases in the doses caused by N Reactor effluent discharged to the Columbia River are estimated to be approximately 0.0024 mrem/yr for an individual consuming water at Ringold, Washington. This incremental increase is approximately 0.06% of the limit established by DOE Order 5400.5 for all discharges to the Columbia River from the Hanford Site. Dose rate calculations are provided in Appendix G.

**5.1.1.7 Provisions for Bypass.** No capability has been provided for bypass of the treatment system. Treatment system outages that might otherwise require discharge of untreated wastewater will be accommodated by accumulating the wastewater in the 105-N Lift Station, if needed.

### 5.1.2 105-N Fuel Basin Decontamination Water Treatment System

**5.1.2.1 Wastewater Transfer to 107-N Facility.** During decontamination operations, wastewater will be withdrawn from the 105-N Fuel Basin and transferred to the 107-N Building at a rate up to 1050 gal/min using existing

pumps and piping networks. The 105-N Fuel Basin overflow pipes that currently discharge to the 105-N Lift Station will be fitted with valves to prevent the unplanned transfer of fuel basin water to the 105-N Lift Station.

**5.1.2.2 Wastewater Filtration.** Wastewater from the 105-N Fuel Basin will be filtered using existing sand filters in the 107-N Building that were previously used to treat recycled fuel basin water. Filtration will remove suspended solids and help maintain clarity in the fuel basin during decontamination operations.

When solids accumulate to the point where filter performance is impaired, as determined by the differential pressure measured across the filter media, the online filter will be back-flushed using raw water.

Solids from the filter will be discharged to the existing T-1 Settling Tank in the 107-N Facility to await transfer to the GTF. The solid slurries will be transported to the GTF by railcar; existing piping from the T-1 Tank to the N Reactor Railcar Facility will be used to load the solid slurry into railcars for transfer. Based upon the previous operating history of this filter in this application, it is estimated that approximately 1 gal of filter sludge will be generated for every 19,000 gal of wastewater processed.

**5.1.2.3 Ion Exchange Treatment.** Approximately 20 gal/min of the filtered wastewater from the basin area will be diverted to one of the cation/anion exchange column pairs in the N Reactor wastewater treatment system. Treatment will reduce the radionuclide content of the wastewater supplied to decontamination hoses in the 105-N Fuel Basin area, lowering the radiation exposure from this source to less than 1 mR/h.

When the resin has been expended (signified by a sharp rise in conductivity and/or radiation levels in the treated effluent), the expended resin will be hydraulically displaced using potable water and transferred to the T-5 Resin Dewatering Tank. The resin will be drained of free liquid and packaged into 55-gal drums for shipment to the Central Waste Complex using existing tank and load-out facility.

**5.1.2.4 Recycle of Wastewater to 105-N Fuel Basin.** Both the filtered wastewater and the effluent from the IX system will be recycled to the 105-N Fuel Basin area. The filtered wastewater will be reintroduced directly into the fuel basin through an existing piping network. The IX effluent will be returned to new decontamination stations located within the fuel basin area through a new piping system.

## 5.2 SIZING CRITERIA FOR TREATMENT UNITS

This section presents the design bases and sizing calculations for the major treatment operations and processes for the N Reactor wastewater treatment system.

### 5.2.1 Wastewater Accumulation and Equalization

**5.2.1.1 Design Basis.** Detain wastewater generated by up to 40 h of building decontamination activities at a flow rate of 20 gal/min.

**5.2.1.2 Sizing Calculations.** The required collection tank size is given by the following equation:

Minimum Volume = (20 gal/min) × (2400 min) = 48,000 gal

Therefore, the existing 105-N Lift Station with a working capacity of 54,000 gal, is adequate for this use.

### 5.2.2 Filtration

**5.2.2.1 Design Basis.** The microfilter has been sized by a vendor experienced in radioactive waste filtration processes to ensure a maximum wastewater flux of 0.5 gal/min/ft$^2$, with 100% theoretical retention of spherical particles 5 μm and larger. The following particle size distribution was also assumed:

- 100 volume percent (vol %) of the particles greater than 1.5 μm
- 50 vol % of the particles between 1.5 and 26 μm
- 90 vol % of the particles between 1.5 and 49 μm.

**5.2.2.2 Sizing Calculations.** The minimum filter surface area is given by the following equation:

Minimum area = (20 gal/min)/(0.5 gal/min/ft$^2$) = 40 ft$^2$

Chosen surface area = 58.8 ft$^2$

Based upon data provided by the vendor, a filter with a bubble pressure of 20 in. of water will theoretically retain 100% of spherical particles 5 μm and larger on its surface. Actual performance is generally considerably better, as depth-filtration occurs as the particles penetrate into the porous media. Vendor data indicates that a filter rated at 2 μm has an average bubble pressure of 17 to 24 in. of water. Therefore, a 2-μm nominal filter element was selected.

### 5.2.3 Ion Exchange

**5.2.3.1 Design Basis.** The IX system was sized using a minimum wastewater flux of 1.75 gal/min/ft$^2$ and a maximum flux of 10 gal/min/ft$^2$ based upon vendor data. A 24-h minimum run time between IX resin changeouts for the strong acid cation column was established. A wastewater loading of 1.40 meq/L of cations in the influent and an exchange resin capacity of approximately 19,000 meq/ft$^3$ were assumed.

**5.2.3.2 Sizing Calculations.** The minimum and maximum diameters of the IX columns are given by the following equations:

Minimum area = (20 gal/min)/(10 gal/min/$ft^2$) = 2 $ft^2$

Minimum diameter = 2 × [(2 $ft^2$)/(3.1416)]$^{1/2}$ = 1.6 ft

Maximum area = (10 gal/min)/(1.75 gal/min/$ft^2$) = 5.7 $ft^2$

Maximum diameter = 2 × [(5.7 $ft^2$)/(3.1416)]$^{1/2}$ = 2.7 ft

Chosen column diameter = 1.67 ft

The minimum size of the cation exchange bed based upon run time during recycling of basin water is given by the following equation:

Minimum Volume = (1.40 meq/L) × (3.785 L/gal) × (20 gal/min) × (1440 min) × (5.26E-5 $ft^3$/meq)

= 8 $ft^3$

Chosen column volume = 13 $ft^3$

### 5.2.4 Granulated Activated Carbon Adsorption

**5.2.4.1 Design Basis.** The GAC system was sized using a maximum wastewater flux of 4.5 gal/min/$ft^2$ based upon vendor data. A 360-h minimum run time between regenerations or changeout was established. A wastewater loading of 880 μg/L of TOC, a GAC capacity of approximately 0.002 μg TOC/μg carbon, and a carbon density of 30 lb/$ft^3$ were assumed.

**5.2.4.2 Sizing Calculations.** The minimum diameter of the GAC adsorbers are given by the following equation:

Minimum area = (20 gal/min)/(4.5 gal/min/$ft^2$) = 4.4 $ft^2$

Minimum diameter = 2 × [(4.4 $ft^2$)/(3.1416)]$^{1/2}$ = 2.38 ft

Chosen column diameter = 3.75 ft

The minimum size of the GAC adsorbers based upon run time is given by the following equation:

Minimum Volume = (880 μg TOC/L) × (3.785 L/gal) × (10 gal/min) × (500 μg GAC/μg TOC) × (2.2E-9 lb/μg) × (0.03 $ft^3$/lb GAC) × (21,600 min)

= 23.7 $ft^3$

Chosen Volume = 35 $ft^3$

### 5.2.5 Effluent Collection, Neutralization, and Sampling

**5.2.5.1 Design Basis.** Provide two collection tanks, each sized to contain up to 24 h of treated wastewater. To provide adequate freeboard, the working volume of the tank will be equal to 80% of the total capacity. A flow rate of 10 gal/min and a tank fluid depth equal to the tank diameter were assumed.

**5.2.5.2 Sizing Calculations.** The minimum tank size is given by the following equations:

$$\text{Minimum Volume} = (10\ \text{gal/min}) \times (1440\ \text{min}) = 14{,}400\ \text{gal}$$

$$\text{Chosen Volume} = (14{,}400\ \text{gal})/(0.8) = 18{,}000\ \text{gal} = 2{,}406\ \text{ft}^3$$

$$\text{Tank Diameter} = \{[4 \times (2406\ \text{ft}^3)]/(3.1416)\}^{1/3} = 14.5\ \text{ft}$$

## 5.3 LIMITATIONS

In many cases, detailed current data for the composition of wastewater streams to be treated were not available for use in preparing this report. In these instances, best professional judgement was used to extend available data to develop a design basis for the treatment system. Before final design of the recommended treatment system, these estimates must be confirmed through additional sampling and analysis of the wastewater. In particular, the assumptions regarding composition and characteristics of solids in the 105-N Fuel Basins should be confirmed.

The predicted treated effluent composition and treatment system performance are based upon typical reported DFs and unit-process operating characteristics, not site-specific testing. Treatability testing to verify the assumed DFs and predicted performance of the treatment system is strongly recommended prior to final design and construction.

## 6.0 REFERENCES

40 CFR 141, "National Primary Drinking Water Regulations," Title 40, *Code of Federal Regulations*, Part 141, as amended, U.S. Environmental Protection Agency, Washington, D.C.

40 CFR 143, "National Secondary Drinking Water Regulations," Title 40, *Code of Federal Regulations*, Part 143, as amended, U.S. Environmental Protection Agency, Washington, D.C.

40 CFR 423, "Steam Electric Power Generating Point Source Category," Title 40, *Code of Federal Regulations*, Part 423, as amended, U.S. Environmental Protection Agency, Washington, D.C.

ANSI/ANS, 1979, *American National Standard - Liquid Radioactive Waste Processing System for Light Water Reactor Plants*, ANSI/ANS-55.6-1979, American Nuclear Society, New York, New York.

ARL, 1988, *Hydrothermal Modeling of Cooling Water Outfall for N Reactor*, Alden Research Laboratory, Inc., Holden, Massachusetts.

DOE, 1990a, *Grout Treatment Facility Dangerous Waste Permit Application*, DOE/RL 88-27, U.S. Department of Energy, Richland, Washington.

DOE, 1990b, *Radiation Protection of the Public and the Environment*, DOE Order 5400.5, U.S. Department of Energy, Washington, D.C.

Ecology, EPA and DOE, 1989, *Hanford Federal Facility Agreement and Consent Order*, Washington State Department of Ecology, U.S. Environmental Protection Agency, and U.S. Department of Energy, Olympia, Washington.

Ecology, 1991a, *Water Quality Permit Writers Guide (Draft)*, Washington State Department of Ecology, Olympia, Washington.

Ecology, 1991b, "In the Matter of the Compliance by the United States Department of Energy with Chapter 70.105 and 90.48 RCW and the Rules and Regulations of the Department of Ecology," Draft Consent Order No. DE 91NM-177, dated November 20, 1991, Washington State Department of Ecology, Olympia, Washington.

EPA, 1986, *Quality Criteria for Water*, U.S. Environmental Protection Agency EPA 440/5-86-001, Washington, D.C.

EPA, 1990, *Risk Reduction Engineering Laboratory (RREL) Treatability Database*, U.S. Environmental Protection Agency, Washington, D.C.

*Federal Water Pollution Control Act of 1977*, 33 USC 1251 et seq.

*Resource Conservation and Recovery Act of 1976*, 42 USC 6901 et seq.

UNC, 1986a, Internal Memorandum, A. P. Larrick to D. A. Wiggins and G. P. Simon, "Effect of Polyelectrolyte on Radionuclide Removal," United Nuclear Corporation, Richland, Washington.

UNC, 1986b, Internal Memorandum, B. R. Ball to A. P. Larrick, "Project H-682 Pilot Study, Summary Report for Run 2," United Nuclear Corporation, Richland, Washington.

UNC, 1986c, Internal Memorandum, B. R. Ball to A. P. Larrick, "Project H-682 Pilot Study, Summary Report for Run 3," United Nuclear Corporation, Richland, Washington.

UNC, 1987a, Internal Memorandum, B. R. Ball to D. J. Watson, "Precoat Filter Performance," United Nuclear Corporation, Richland, Washington.

UNC, 1987b, Internal Memorandum, B. R. Ball to R. E. Worthington, "Project H-682, Influent Properties for FDC Appendix A," United Nuclear Corporation, Richland, Washington.

UNI, 1983, *N Reactor Thermal Plume Characterization Study During Dual Purpose Mode of Operation*, UNI-2620, Pacific Northwest Laboratory, Richland, Washington.

*Water Pollution Control Act of 1977*, (aka Clean Water Act) 33 USC 1251 et seq.

WAC 173-201, "Water Quality Standards for Waters of the State of Washington," Washington Administrative Code 173-201, as amended, Washington State Department of Ecology, Olympia, Washington.

WAC 173-203, "Water Quality Standards for Waters of the State of Washington," Washington Administrative Code 173-203, proposed June 5, 1991, Washington State Department of Ecology, Olympia, Washington.

WAC 248-54, "Public Water Supplies," Washington Administrative Code 248-54, as amended, Washington State Department of Ecology, Olympia, Washington.

WHC, 1988, *Best Available Technology (Economically Achievable) Guidance Document for the Hanford Site*, WHC-EP-0137, Westinghouse Hanford Company Waste Management Systems Engineering, Richland, Washington, July 1988.

WHC, 1990a, *N Reactor Effluent Stream Specific Report*, WHC-EP-0342, Addendum 3, Westinghouse Hanford Company, Richland, Washington, August 1990.

WHC, 1990b, *Cost Analysis for Final Disposal of Double Shell Tank Waste*, WHC-SD-WM-ER-079, Westinghouse Hanford Company, Richland, Washington.

WHC, 1991a, *N Reactor Shutdown Program Plan*, WHC-SP-0615, Rev. 2, Westinghouse Hanford Company, Richland, Washington.

WHC, 1991b, Letter, D. J. Watson (WHC) to R. L. Treat (Ebasco), Westinghouse Hanford Company, Richland, Washington.

WHC, 1991c, *Facility Effluent Monitoring Plan Determinations for the 100 Area Facilities*, WHC-EP-0439, Westinghouse Hanford Company, Richland, Washington.

WHC, 1992, *Columbia River Characterization Data Report in Support of Hanford Project L-045H*, WHC-SD-L045H-DP-002, Rev. 0, Westinghouse Hanford Company, Richland, Washington.

WPCA, 1971, "Coastal Waters Protection Act," *Revised Code of Washington*, Chapter 90.48 et seq., Olympia, Washington.

This page intentionally left blank.

# APPENDIX A

## ALTERNATIVE A
## TREATMENT EQUIPMENT SIZING AND
## SECONDARY WASTE CALCULATIONS

This page intentionally left blank.

# ALTERNATIVE A
# TREATMENT EQUIPMENT SIZING, AND
# SECONDARY WASTE CALCULATIONS

Appendix A consists of spreadsheets and tables that represent waste stream treatment calculations, treatment system equipment sizing calculations, and calculations of the secondary waste streams generated for Alternative A. Each spreadsheet typically presents one of these calculations for each specific unit or process in the treatment train.

The first table presented for each unit or process shows how the concentration of each contaminant is affected by the specific treatment unit or process. The concentrations in the stream exiting each treatment unit or process are calculated by dividing the contaminant concentrations entering the treatment unit/process by the decontamination factor (DF) noted on each table. Based on the concentrations and flow rates, the mass of the contaminant entering and exiting the unit or process is also presented. The mass of secondary wastes are noted by the difference between the influents and effluent masses.

Spreadsheets calculation related to secondary wastes are attached following the treatment calculation spreadsheet for each specific treatment unit or process.

Spreadsheets showing sizing and general design calculations are presented for IX or GAC treatment units.

Assumptions for specific calculations are generally noted on each corresponding spreadsheet.

Alternative A

| Design Criteria | | |
|---|---|---|
| Filtration | | |
| Influent From Equalization Tank | | |
| 10 | Flow Rate,GPM | |
| | K [NH4+=NH3] | 6.3E-10 |
| | K [HCO3=CO3] | 5.6E-11 |
| 3 | ppm Body Feed | |
| 880 | Hours of Operation per Year | |
| 480,000 | Gal/yr treated effluent | |
| 6 | pounds of product per backflush | |

Design Basis
Specific Activity

| | Bq(ug) | Bq(gm) |
|---|---|---|
| Am-241 | 3.43E+00 | 3.43E+12 |
| Cm-242 | 3.31E+03 | 3.31E+15 |
| Cm-244 | 8.10E+01 | 8.10E+13 |
| Co-60 | 1.13E+03 | 1.13E+15 |
| Cs-134 | 1.30E+03 | 1.30E+15 |
| Cs-137 | 1.00E+02 | 1.00E+14 |
| C-14 | 4.46E+00 | 4.46E+12 |
| H-3 | 9.68E+03 | 9.68E+15 |
| Mn-54 | 7.70E+03 | 7.70E+15 |
| Pb-210 | 7.66E+01 | 7.66E+13 |
| Pu-238 | 1.71E+01 | 1.71E+13 |
| Pu-239/240 | 7.20E-02 | 7.20E+10 |
| Radium | 9.90E-01 | 9.90E+11 |
| Ru-106 | 6.60E+03 | 6.60E+15 |
| Sr-90 | 2.70E+02 | 2.70E+14 |
| U-234 | 6.25E-03 | 6.25E+09 |
| U-235 | 2.16E-06 | 2.16E+06 |
| U-238 | 3.36E-07 | 3.36E+05 |

| | | | | Cations | Anions | Concentrations (Pt. 1) Before DE Addition | | | Concentrations (Pt. 2) Entering Filtration | | | | Concentrations Exiting Filtration Unit (Pt 3) | | | (Pt. 4) Bottom |
|---|---|---|---|---|---|---|---|---|---|---|---|---|---|---|---|---|
| Chemical | Valence | Charge | MW | (meq/L) | (meq/L) | (ug/L) | (Mol/L) | (lbs/hr) | (ug/L) | (Mol/L) | (lbs/hr) | (DF) | (ug/L) | (Mol/L) | (lbs/hr) | (lbs/hr) |
| Inorganics | | | | | | | | | | | | | | | | |
| Ammonia (Total N) | | | 18 | | | 2.23E+02 | 1.24E-05 | 1.11E-03 | 2.23E+02 | 1.24E-05 | 1.11E-03 | 1 | 2.23E+02 | 1.24E-05 | 1.11E-03 | 0.00E+00 |
| Ammonia | | | 17 | | | 3.00E+00 | 1.5873E-08 | 1.50E-05 | 3.00E+00 | 1.59E-08 | 1.50E-05 | 1 | 3.00E+00 | 1.59E-08 | 1.50E-05 | 0.00E+00 |
| Ammonium | 1 | 1 | 18 | 1.22E-02 | 0.00E+00 | 2.20E+02 | 1.24E-05 | 1.10E-03 | 2.20E+02 | 1.24E-05 | 1.10E-03 | 1 | 2.20E+02 | 1.24E-05 | 1.10E-03 | 0.00E+00 |
| Aluminum | 3 | 1 | 27 | 4.22E-03 | 0.00E+00 | 3.80E+01 | 1.41E-06 | 1.90E-04 | 3.80E+01 | 1.41E-06 | 1.90E-04 | 7.1 | 5.35E+00 | 1.98E-07 | 2.67E-05 | 1.63E-04 |
| Antimony | 1 | 1 | 121.75 | 1.15E-04 | 0.00E+00 | 1.40E+01 | 1.15E-07 | 6.99E-05 | 1.40E+01 | 1.15E-07 | 6.99E-05 | 1.1 | 1.27E+01 | 1.05E-07 | 6.34E-05 | 6.30E-06 |
| Arsenic | 3 | 1 | 74.9 | 5.21E-04 | 0.00E+00 | 1.30E+01 | 1.74E-07 | 6.50E-05 | 1.30E+01 | 1.74E-07 | 6.50E-05 | 1.1 | 1.18E+01 | 1.58E-07 | 5.90E-05 | 5.90E-06 |
| Barium | 2 | 1 | 137.30 | 1.51E-03 | 0.00E+00 | 1.04E+02 | 7.57E-07 | 5.20E-04 | 1.04E+02 | 7.57E-07 | 5.20E-04 | 1.3 | 8.00E+01 | 5.83E-07 | 4.00E-04 | 1.20E-04 |
| Boron | 3 | 1 | 10.80 | 2.32E-02 | 0.00E+00 | 8.34E+01 | 7.72E-06 | 4.17E-04 | 8.34E+01 | 7.72E-06 | 4.17E-04 | 1.1 | 7.58E+01 | 7.02E-06 | 3.79E-04 | 3.79E-05 |
| Cadmium | 2 | 1 | 112.40 | 5.34E-05 | 0.00E+00 | 3.00E+00 | 2.67E-08 | 1.50E-05 | 3.00E+00 | 2.67E-08 | 1.50E-05 | 1.3 | 2.31E+00 | 2.06E-08 | 1.16E-05 | 3.46E-06 |
| Calcium | 2 | 1 | 40.10 | 1.13E+00 | 0.00E+00 | 2.28E+04 | 5.67E-04 | 1.14E-01 | 2.28E+04 | 5.67E-04 | 1.14E-01 | 1 | 2.28E+04 | 5.67E-04 | 1.14E-01 | 0.00E+00 |
| Chloride | 1 | -1 | 35.50 | 0.00E+00 | -7.32E-02 | 2.60E+03 | 7.32E-05 | 1.30E-02 | 2.60E+03 | 7.32E-05 | 1.30E-02 | 1 | 2.60E+03 | 7.32E-05 | 1.30E-02 | 0.00E+00 |
| Chromium | 2 | -1 | 52 | 0.00E+00 | -2.21E-04 | 6.00E+00 | 1.15E-07 | 3.00E-05 | 6.00E+00 | 1.15E-07 | 3.00E-05 | 5.1 | 1.18E+00 | 2.26E-08 | 5.88E-06 | 2.41E-05 |
| Cobalt | 2 | 1 | 59 | 0.00E+00 | 0.00E+00 | 0.00E+00 | 0.00E+00 | 0.00E+00 | 0.00E+00 | 0.00E+00 | 0.00E+00 | 1 | 0.00E+00 | 0.00E+00 | 0.00E+00 | 0.00E+00 |
| Copper | 2 | 1 | 63.55 | 9.44E-04 | 0.00E+00 | 3.00E+01 | 4.72E-07 | 1.50E-04 | 3.00E+01 | 4.72E-07 | 1.50E-04 | 2.3 | 1.30E+01 | 2.05E-07 | 6.52E-05 | 8.47E-05 |
| Fluoride | 1 | -1 | 28.10 | 0.00E+00 | -7.20E-03 | 2.04E+02 | 7.20E-06 | 1.02E-03 | 2.04E+02 | 7.20E-06 | 1.02E-03 | 1 | 2.04E+02 | 7.20E-06 | 1.02E-03 | 0.00E+00 |
| Iron | 2 | 1 | 55.80 | 6.42E-03 | 0.00E+00 | 1.79E+02 | 3.21E-06 | 8.94E-04 | 1.79E+02 | 3.21E-06 | 8.94E-04 | 17.3 | 1.03E+01 | 1.85E-07 | 5.17E-05 | 8.43E-04 |
| Lead | 2 | 1 | 207.2 | 3.76E-04 | 0.00E+00 | 3.90E+01 | 1.88E-07 | 1.95E-04 | 3.90E+01 | 1.88E-07 | 1.95E-04 | 2.7 | 1.44E+01 | 6.97E-08 | 7.22E-05 | 1.23E-04 |
| Magnesium | 2 | 1 | 24.30 | 5.60E-01 | 0.00E+00 | 6.81E+03 | 2.80E-04 | 3.40E-02 | 6.81E+03 | 2.80E-04 | 3.40E-02 | 1 | 6.81E+03 | 2.80E-04 | 3.40E-02 | 0.00E+00 |
| Manganese | 2 | 1 | 54.90 | 3.17E-03 | 0.00E+00 | 8.68E+01 | 1.58E-06 | 4.34E-04 | 8.68E+01 | 1.58E-06 | 4.34E-04 | 3 | 2.89E+01 | 5.26E-07 | 1.45E-04 | 2.89E-04 |
| Nickel | 2 | 1 | 58.7 | 3.07E-04 | 0.00E+00 | 9.00E+00 | 1.53E-07 | 4.50E-05 | 9.00E+00 | 1.53E-07 | 4.50E-05 | 1.2 | 7.50E+00 | 1.28E-07 | 3.75E-05 | 7.40E-06 |
| Nitrate | 1 | -1 | 62.00 | 0.00E+00 | -7.06E-03 | 4.38E+02 | 7.06E-06 | 2.19E-03 | 4.38E+02 | 7.06E-06 | 2.19E-03 | 1 | 4.38E+02 | 7.06E-06 | 2.19E-03 | 0.00E+00 |
| Phosphorous | 3 | -1 | 30.97 | *0.00E+00 | -1.94E-03 | 2.00E+01 | 6.46E-07 | 9.99E-05 | 2.00E+01 | 6.46E-07 | 9.99E-05 | 1 | 2.00E+01 | 6.46E-07 | 9.99E-05 | 0.00E+00 |
| Potassium | 1 | 1 | 39.10 | 9.03E-02 | 0.00E+00 | 3.53E+03 | 9.03E-05 | 1.76E-02 | 3.53E+03 | 9.03E-05 | 1.76E-02 | 1.2 | 2.94E+03 | 7.52E-05 | 1.47E-02 | 2.94E-03 |
| Selenium | 2 | 1 | 79 | 1.06E-03 | 0.00E+00 | 4.20E+01 | 5.32E-07 | 2.10E-04 | 4.20E+01 | 5.32E-07 | 2.10E-04 | 1 | 4.20E+01 | 5.32E-07 | 2.10E-04 | 0.00E+00 |
| Silicon | 2 | -1 | 28.10 | 0.00E+00 | -1.46E-01 | 2.04E+03 | 7.26E-05 | 1.02E-02 | 2.04E+03 | 7.26E-05 | 1.02E-02 | 10 | 2.04E+02 | 7.26E-06 | 1.02E-03 | 9.18E-03 |
| Silver | 1 | 1 | 107.8 | 4.63E-06 | 0.00E+00 | 5.00E-01 | 4.63E-09 | 2.50E-06 | 5.00E-01 | 4.63E-09 | 2.50E-06 | 1.2 | 4.17E-01 | 3.86E-09 | 2.08E-06 | 4.16E-07 |
| Sodium | 1 | 1 | 23.00 | 8.57E-01 | 0.00E+00 | 1.97E+04 | 8.57E-04 | 9.84E-02 | 1.97E+04 | 8.57E-04 | 9.84E-02 | 1 | 1.97E+04 | 8.57E-04 | 9.84E-02 | 0.00E+00 |
| Strontium | 2 | 1 | 87.60 | 1.99E-03 | 0.00E+00 | 8.73E+01 | 9.97E-07 | 4.36E-04 | 8.73E+01 | 9.97E-07 | 4.36E-04 | 1.1 | 7.94E+01 | 9.06E-07 | 3.97E-04 | 3.97E-05 |
| Sulfate | 2 | -1 | 96.00 | 0.00E+00 | -2.52E-01 | 1.21E+04 | 1.26E-04 | 6.05E-02 | 1.21E+04 | 1.26E-04 | 6.05E-02 | 1 | 1.21E+04 | 1.26E-04 | 6.05E-02 | 0.00E+00 |
| Uranium | 2 | 1 | 238.00 | 2.39E-05 | 0.00E+00 | 2.84E+00 | 1.19E-08 | 1.42E-05 | 2.84E+00 | 1.19E-08 | 1.42E-05 | 10 | 2.84E-01 | 1.19E-09 | 1.42E-06 | 1.28E-05 |
| Vanadium | 2 | 1 | 50.94 | 2.39E-04 | 0.00E+00 | 6.10E+00 | 1.20E-07 | 3.05E-05 | 6.10E+00 | 1.20E-07 | 3.05E-05 | 1 | 6.10E+00 | 1.20E-07 | 3.05E-05 | 0.00E+00 |
| Zinc | 2 | 1 | 65.40 | 3.70E-04 | 0.00E+00 | 1.21E+01 | 1.85E-07 | 6.05E-05 | 1.21E+01 | 1.85E-07 | 6.05E-05 | 2.2 | 5.50E+00 | 8.41E-08 | 2.75E-05 | 3.30E-05 |
| Diatomaceous Earth | | | | | | 0.00E+00 | | 0.00E+00 | 3.00E+03 | | 1.50E-02 | 100 | 3.00E+01 | | 1.50E-04 | 1.48E-02 |
| SUM INORGANICS | | | | | | 7.14E+04 | 2.12E-03 | 3.57E-01 | 7.14E+04 | 2.12E-03 | 3.57E-01 | 1.040583 | 6.86E+04 | 2.04E-03 | 3.43E-01 | 1.39E-02 |
| Total Cations (meq/L) | | | | | | 2.70E+00 | | | 2.70E+00 | | | | 2.67E+00 | | | |
| Total Anions (meq/L) | | | | | | -4.87E-01 | | | -4.87E-01 | | | | -3.56E-01 | | | |
| Charge Balance (%) | | | | | | NA | | | NA | | | | 5.97% | | | |
| Alkalinity (as CaCO3) | | | | | | 1.12E-01 | | | 1.12E-01 | | | | 1.17E-01 | | | |
| pH (Dimensionless) | | | | | | 7.30E+00 | | | 7.30E+00 | | | | 7.30E+00 | | | |
| Carbonate | 2 | -1 | 60 | | | 1.70E+02 | 2.83E-06 | 8.49E-04 | 1.70E+02 | 2.83E-06 | 8.49E-04 | 0.964685 | 1.70E+02 | 2.90E-06 | 8.09E-04 | -3.05E-05 |
| Bicarbonate | 1 | -1 | 61 | | | 1.35E+05 | 2.21E-03 | 6.73E-01 | 1.35E+05 | 2.21E-03 | 6.73E-01 | 0.964685 | 1.41E+05 | 2.31E-03 | 7.04E-01 | -3.05E-02 |
| TDS | | | | | | 6.84E+04 | | 3.42E-01 | 6.84E+04 | | 3.42E-01 | 1 | 6.84E+04 | | 3.42E-01 | 0.00E+00 |
| TSS | | | | | | 3.00E+03 | | 1.50E-02 | 6.00E+03 | | 3.00E-02 | 18.2 | 3.30E+02 | | 1.65E-03 | 2.83E-02 |
| Temperature (deg C) | | | | | | 1.85E+01 | | | | | | | 1.85E+01 | | | |
| Organics | | | | | | | | | | | | | | | | |
| Acetone | | | | | | 1.73E+01 | | 8.64E-05 | 1.73E+01 | | 8.64E-05 | 1.3 | 1.33E+01 | | 6.65E-05 | 1.99E-05 |
| 1-butanol | | | | | | 3.62E+01 | | 1.81E-04 | 3.62E+01 | | 1.81E-04 | 1 | 3.62E+01 | | 1.81E-04 | 0.00E+00 |
| 2-butanone | | | | | | 2.91E+01 | | 1.46E-04 | 2.91E+01 | | 1.46E-04 | 1 | 2.91E+01 | | 1.46E-04 | 0.00E+00 |
| BHT | | | | | | 1.35E+01 | | 6.74E-05 | 1.35E+01 | | 6.74E-05 | 1 | 1.35E+01 | | 6.74E-05 | 0.00E+00 |
| Hexone (MIBK) | | | | | | 1.03E+01 | | 5.15E-05 | 1.03E+01 | | 5.15E-05 | 1.5 | 6.87E+00 | | 3.43E-05 | 1.72E-05 |
| Toluene | | | | | | 5.30E+00 | | 2.65E-05 | 5.30E+00 | | 2.65E-05 | 1 | 5.30E+00 | | 2.65E-05 | 0.00E+00 |
| Trichloromethane | | | | | | 5.10E+00 | | 2.55E-05 | 5.10E+00 | | 2.55E-05 | 1 | 5.10E+00 | | 2.55E-05 | 0.00E+00 |
| Methylene Chloride | | | | | | | | | | | | 1 | 0.00E+00 | | 0.00E+00 | 0.00E+00 |
| Tetrachloroethane | | | | | | 1.00E+00 | | 5.00E-06 | 1.00E+00 | | 5.00E-06 | 1 | 1.00E+00 | | 5.00E-06 | 0.00E+00 |
| Total Organic Carbon | | | | | | 8.80E+02 | | 4.40E-03 | 8.80E+02 | | 4.40E-03 | 1 | 8.80E+02 | | 4.40E-03 | 0.00E+00 |
| Total Carbon | | | | | | 1.19E+04 | | 5.95E-02 | 1.19E+04 | | 5.95E-02 | 1 | 1.19E+04 | | 5.95E-02 | 0.00E+00 |
| Total Organic Halides | | | | | | 2.42E+01 | | 1.21E-04 | 2.42E+01 | | 1.21E-04 | 1 | 2.42E+01 | | 1.21E-04 | 0.00E+00 |
| Radionuclides | | | | | | (ug/L) | (pCi/L) | (pCi/hr) | (ug/L) | (pCi/L) | (pCi/hr) | (DF) | (ug/L) | (pCi/L) | (pCi/hr) | (pCi/hr) |
| Total Alpha | | | | | | | 4.00E+01 | 1.13E+06 | | 4.00E+01 | 1.13E+06 | 10 | | 4.00E+00 | 1.13E+04 | 1.02E+06 |
| Total Beta | | | | | | | 1.65E+00 | 3.75E+09 | | 1.65E+00 | 3.75E+09 | 1 | | 1.65E+00 | 3.75E+09 | 0.00E+00 |
| Am-241 | | | | | | 2.86E-05 | 7.83E+01 | 1.88E+05 | 2.86E-05 | 7.83E+01 | 1.88E+05 | 10 | 2.86E-06 | 7.83E+00 | 1.88E+04 | 1.44E+06 |
| Cm-242 | | | | | | 1.49E-10 | 4.93E-01 | 1.12E+03 | 1.49E-10 | 4.93E-01 | 1.12E+03 | 10 | 1.49E-11 | 4.93E-02 | 1.12E+02 | 1.01E+03 |
| Cm-244 | | | | | | 1.10E-08 | 8.92E-01 | 2.03E+03 | 1.10E-08 | 8.92E-01 | 2.03E+03 | 10 | 1.10E-09 | 8.92E-02 | 2.03E+02 | 1.82E+03 |
| Co-60 | | | | | | 6.10E-06 | 7.00E+03 | 1.59E+07 | 6.10E-06 | 7.00E+03 | 1.59E+07 | 7.4 | 8.37E-07 | 9.46E+02 | 2.15E+06 | 1.37E+07 |
| Cs-134 | | | | | | 1.29E-06 | 1.67E+03 | 3.79E+06 | 1.29E-06 | 1.67E+03 | 3.79E+06 | 1.1 | 1.17E-06 | 1.52E+03 | 3.45E+06 | 3.45E+05 |
| Cs-137 | | | | | | 2.70E-03 | 4.71E+05 | 1.07E+09 | 2.70E-03 | 4.71E+05 | 1.07E+09 | 1.1 | 2.63E-03 | 4.28E+05 | 9.72E+08 | 9.72E+07 |
| C-14 | | | | | | 9.50E-06 | 4.24E+01 | 9.63E+04 | 9.50E-06 | 4.24E+01 | 9.63E+04 | 1 | 9.50E-06 | 4.24E+01 | 9.63E+04 | 0.00E+00 |
| H-3 | | | | | | 5.72E-04 | 5.54E+06 | 1.26E+10 | 5.72E-04 | 5.54E+06 | 1.26E+10 | 1 | 5.72E-04 | 5.54E+06 | 1.26E+10 | 0.00E+00 |
| Mn-54 | | | | | | 7.70E-07 | 6.04E+03 | 1.37E+07 | 7.70E-07 | 6.04E+03 | 1.37E+07 | 3 | 2.56E-07 | 2.01E+03 | 4.57E+06 | 9.14E+06 |
| Pb-210 | | | | | | 3.88E-07 | 2.97E+01 | 6.74E+04 | 3.88E-07 | 2.97E+01 | 6.74E+04 | 2.7 | 1.44E-07 | 1.10E+01 | 2.50E+04 | 4.25E+04 |
| Pu-238 | | | | | | 6.37E-07 | 1.09E+01 | 2.48E+04 | 6.37E-07 | 1.09E+01 | 2.48E+04 | 10 | 6.37E-08 | 1.09E+00 | 2.48E+03 | 2.23E+04 |
| Pu-239/240 | | | | | | 9.25E-04 | 6.66E+01 | 1.51E+05 | 9.25E-04 | 6.66E+01 | 1.51E+05 | 10 | 9.25E-05 | 6.66E+00 | 1.51E+04 | 1.36E+05 |
| Radium | | | | | | 3.33E-07 | 3.30E-01 | 7.49E+02 | 3.33E-07 | 3.30E-01 | 7.49E+02 | 10 | 3.33E-08 | 3.30E-02 | 7.49E+01 | 6.74E+02 |
| Ru-106 | | | | | | 2.57E-06 | 1.72E+04 | 3.91E+07 | 2.57E-06 | 1.72E+04 | 3.91E+07 | 1.7 | 1.51E-06 | 1.01E+04 | 2.30E+07 | 1.61E+07 |
| Sr-90 | | | | | | 6.33E-03 | 1.76E+06 | 4.00E+09 | 6.33E-03 | 1.76E+06 | 4.00E+09 | 1.1 | 5.70E-03 | 1.60E+06 | 3.63E+09 | 3.63E+08 |
| U-234 | | | | | | 2.60E-04 | 1.60E+00 | 3.63E+03 | 2.60E-04 | 1.60E+00 | 3.63E+03 | 10 | 2.60E-05 | 1.60E-01 | 3.63E+02 | 3.27E+03 |
| U-235 | | | | | | 1.00E-01 | 2.17E-01 | 4.93E+02 | 1.00E-01 | 2.17E-01 | 4.93E+02 | 10 | 1.00E-02 | 2.17E-02 | 4.93E+01 | 4.44E+02 |
| U-238 | | | | | | 3.36E+00 | 1.13E+00 | 2.57E+03 | 3.36E+00 | 1.13E+00 | 2.57E+03 | 10 | 3.36E-01 | 1.13E-01 | 2.57E+02 | 2.31E+03 |

Secondary Waste Volumes
Alternative A
Filtration

| | | |
|---|---|---|
| Assume: | 1,335 | Gal/sq ft before backflush, based on LETF data |
| | 480,000 | Gal/yr effluent |
| | 58.8 | ft2 of area, Mott LSI Filter, operated per vendor |
| | 8.33 | lb/Gal backflush water and filter solids mixed |
| | 104.4 | Gal H2O /backflush (assuming 2 filter volumes to backflush) |
| Feed Solids: | 2.83E-02 | lbs per hour |
| Precoat: | 6 | lbs per backflush |
| Number of Operating Hours to Backflush | 130.83 | hrs/backflush |
| Number of Backflushes per year | 6 | backflushes/yr |
| Volume of Backflushes per Year | 638.3096 | gal/yr |
| Per year will generate | 5,317 | lb of unstabilized filter solids and backflush water |
| Assume: | 1 | lb cement/lb solid slurry to stabilize |
| | 94 | lb/ft3 dry Portland cement density |
| Portland Cement Required = | 56.5651 | ft3 per year |
| Stabilized Volume = | 141.7753 | ft3 per year |
| # of Drums of Stabilized Product | 19.28145 | Drums per year |

Alternative A

Design Criteria
H2SO4 Addition (Pt. 5)
Influent From Filtration
400,000 Gal/yr treated effluent
10 Flow Rate, GPM
800 Hours per Year Treatment System is in use

4.300E-07 = K [H2CO3==HCO3] K [H++==H+O] 8.3E-10
K [HCO3==CO3] 5.6E-11

5.5 Neutral pH
7.36 Incoming pH

pH Adjustment Calculations

| | | | | |
|---|---|---|---|---|
| Initial HCO3 = | 2.31E-03 m | | 1.8E-08 m [H+O] initially | |
| Initial CO3 = | 3.8E-06 m | | 1.1E-06 m [H++] | |
| Initial H2CO3 = | 1.58E-02 m | | | |
| x = | 1.56E-04 | Final H2CO3 = | | 1.68E-02 m |
| z = | 2.33E-05 | Final HCO3 = | | 2.10E-03 |
| y = | 1.24E-04 | Final CO3 = | | 8.80E+00 |

Total H+ Required = 1.73E-04 mol/L H2SO4 3.98E+01 kg/yr H2SO4
1.69E+04 ug/L H2SO4

Design Basis

| | Sec(g) | Sec(g) |
|---|---|---|
| Am-241 | 3.43E+08 | 3.43E+12 |
| Cm-242 | 3.31E+03 | 3.31E+15 |
| Cm-244 | 8.10E+01 | 8.10E+13 |
| Co-60 | 1.13E+03 | 1.13E+15 |
| Cs-134 | 1.30E+03 | 1.30E+15 |
| Cs-137 | 1.00E+02 | 1.00E+14 |
| C-14 | 4.46E+00 | 4.46E+12 |
| H-3 | 9.88E+03 | 9.88E+15 |
| Mn-54 | 7.78E+03 | 7.78E+15 |
| Pb-210 | 7.65E+01 | 7.65E+13 |
| Pu-239 | 1.71E+01 | 1.71E+13 |
| Pu-239/240 | 7.20E+02 | 7.20E+14 |
| Radium | 9.90E+01 | 9.90E+11 |
| Ru-106 | 6.88E+03 | 6.88E+15 |
| Sr-90 | 2.78E+02 | 2.78E+14 |
| U-234 | 6.25E+00 | 6.25E+00 |
| U-235 | 2.16E+00 | 2.16E+00 |
| U-238 | 3.30E+07 | 3.30E+05 |

| Chemical | Valence | Charge | MW | Cations (meq/L) | Anions (meq/L) | Concentrations (Pt. 3) Before H2SO4 Addition (mg/L) | (Mol/L) | (lb/hr) | Concentrations (Pt. 6) After H2SO4 Addition (mg/L) | (Mol/L) | (lb/hr) |
|---|---|---|---|---|---|---|---|---|---|---|---|
| **Inorganics** | | | | | | | | | | | |
| Ammonia (Total N) | | | 18 | | | 2.23E+02 | 1.24E-05 | 1.11E-03 | 2.23E+02 | 1.24E-05 | 1.11E-03 |
| Ammonia | | | 17 | | | 3.00E+00 | 1.56E-08 | 1.50E-05 | 3.73E-03 | 2.19E-10 | 1.86E-08 |
| Ammonium | 1 | 1 | 18 | 1.22E-02 | 0.00E+00 | 2.20E+02 | 1.24E-05 | 1.10E-03 | 2.22E+02 | 1.24E-05 | 1.11E-03 |
| Aluminum | 3 | 1 | 27 | 5.96E-04 | 0.00E+00 | 5.35E+00 | 1.98E-07 | 2.67E-05 | 5.35E+00 | 1.98E-07 | 2.67E-05 |
| Antimony | 1 | 1 | 121.75 | 1.05E-04 | 0.00E+00 | 1.27E+01 | 1.05E-07 | 6.36E-05 | 1.27E+01 | 1.05E-07 | 6.36E-05 |
| Arsenic | 3 | 1 | 74.9 | 4.73E-04 | 0.00E+00 | 1.18E+01 | 1.58E-07 | 5.90E-05 | 1.18E+01 | 1.58E-07 | 5.90E-05 |
| Barium | 2 | 1 | 137.30 | 1.17E-03 | 0.00E+00 | 8.00E+01 | 5.83E-07 | 4.00E-04 | 8.00E+01 | 5.83E-07 | 4.00E-04 |
| Boron | 3 | 1 | 10.80 | 2.11E-02 | 0.00E+00 | 7.58E+01 | 7.02E-06 | 3.79E-04 | 7.58E+01 | 7.02E-06 | 3.79E-04 |
| Cadmium | 2 | 1 | 112.40 | 4.11E-05 | 0.00E+00 | 2.31E+00 | 2.05E-08 | 1.15E-05 | 2.31E+00 | 2.05E-08 | 1.15E-05 |
| Calcium | 2 | 1 | 40.10 | 1.13E+00 | 0.00E+00 | 2.28E+04 | 5.67E-04 | 1.14E-01 | 2.28E+04 | 5.67E-04 | 1.14E-01 |
| Chloride | 1 | -1 | 35.50 | 0.00E+00 | -7.32E-02 | 2.60E+03 | 7.32E-05 | 1.30E-02 | 2.60E+03 | 7.32E-05 | 1.30E-02 |
| Chromium | 2 | -1 | 52 | 0.00E+00 | -4.52E-05 | 1.15E+00 | 2.26E-08 | 5.80E-04 | 1.15E+00 | 2.26E-08 | 5.80E-04 |
| Cobalt | 2 | 1 | 59 | 0.00E+00 | 0.00E+00 | 0.00E+00 | 0.00E+00 | 0.00E+00 | 0.00E+00 | 0.00E+00 | 0.00E+00 |
| Copper | 2 | 1 | 63.55 | 4.10E-04 | 0.00E+00 | 1.30E+01 | 2.05E-07 | 6.52E-05 | 1.30E+01 | 2.05E-07 | 6.52E-05 |
| Fluoride | 1 | -1 | 20.10 | 0.00E+00 | -7.20E-03 | 2.04E+02 | 7.20E-06 | 1.02E-03 | 2.04E+02 | 7.20E-06 | 1.02E-03 |
| Iron | 2 | 1 | 55.80 | 3.71E-04 | 0.00E+00 | 1.03E+01 | 1.85E-07 | 5.17E-05 | 1.03E+01 | 1.85E-07 | 5.17E-05 |
| Lead | 2 | 1 | 207.2 | 1.38E-04 | 0.00E+00 | 1.44E+01 | 6.87E-08 | 7.22E-05 | 1.44E+01 | 6.87E-08 | 7.22E-05 |
| Magnesium | 2 | 1 | 24.30 | 5.60E-01 | 0.00E+00 | 6.81E+03 | 2.80E-04 | 3.40E-02 | 6.81E+03 | 2.80E-04 | 3.40E-02 |
| Manganese | 2 | 1 | 54.90 | 1.09E-03 | 0.00E+00 | 2.00E+01 | 5.20E-07 | 1.46E-04 | 2.00E+01 | 5.20E-07 | 1.46E-04 |
| Nickel | 2 | 1 | 58.7 | 2.54E-04 | 0.00E+00 | 7.50E+00 | 1.28E-07 | 3.75E-05 | 7.50E+00 | 1.28E-07 | 3.75E-05 |
| Nitrate | 1 | -1 | 62.00 | 0.00E+00 | -7.00E-03 | 4.38E+02 | 7.06E-06 | 2.19E-03 | 4.38E+02 | 7.06E-06 | 2.19E-03 |
| Phosphorous | 3 | -1 | 30.97 | 0.00E+00 | -1.94E-03 | 2.00E+01 | 6.46E-07 | 9.98E-06 | 2.00E+01 | 6.46E-07 | 9.98E-06 |
| Potassium | 1 | 1 | 39.10 | 7.52E-02 | 0.00E+00 | 2.94E+03 | 7.52E-05 | 1.47E-02 | 2.94E+03 | 7.52E-05 | 1.47E-02 |
| Selenium | 2 | 1 | 78 | 1.00E-03 | 0.00E+00 | 4.20E+01 | 5.32E-07 | 2.10E-04 | 4.20E+01 | 5.32E-07 | 2.10E-04 |
| Silicon | 2 | -1 | 28.10 | 0.00E+00 | -1.46E-02 | 2.04E+02 | 7.26E-06 | 1.02E-03 | 2.04E+02 | 7.26E-06 | 1.02E-03 |
| Silver | 1 | 1 | 107.9 | 3.86E-08 | 0.00E+00 | 4.17E-01 | 3.86E-09 | 2.08E-06 | 4.17E-01 | 3.86E-09 | 2.08E-06 |
| Sodium | 1 | 1 | 23.00 | 8.57E-01 | 0.00E+00 | 1.97E+04 | 8.57E-04 | 9.84E-02 | 1.97E+04 | 8.57E-04 | 9.84E-02 |
| Strontium | 2 | 1 | 87.60 | 7.91E-03 | 0.00E+00 | 7.94E+01 | 9.06E-07 | 3.97E-04 | 7.94E+01 | 9.06E-07 | 3.97E-04 |
| Sulfate | 2 | -1 | 96.00 | 0.00E+00 | -2.52E-01 | 1.21E+04 | 1.26E-04 | 6.06E-02 | 2.87E+04 | 2.98E-04 | 1.43E-01 |
| Uranium | 2 | 1 | 238.00 | 2.38E-06 | 0.00E+00 | 2.84E-01 | 1.19E-09 | 1.42E-06 | 2.84E-01 | 1.19E-09 | 1.42E-06 |
| Vanadium | 2 | 1 | 50.94 | 2.38E-04 | 0.00E+00 | 6.18E+00 | 1.20E-07 | 3.06E-05 | 6.18E+00 | 1.20E-07 | 3.06E-05 |
| Zinc | 2 | 1 | 65.40 | 1.09E-04 | 0.00E+00 | 5.50E+00 | 8.41E-08 | 2.75E-05 | 5.50E+00 | 8.41E-08 | 2.75E-05 |
| SUM INORGANICS | | | | | | 6.84E+04 | 2.84E-03 | 3.42E-01 | 9.52E+04 | 2.21E-03 | 4.76E-01 |
| Total Cations (meq/L) | | | | | | 7.67E+00 | | | 2.67E+00 | | |
| Total Anions (meq/L) | | | | | | -3.56E-01 | | | -7.82E-01 | | |
| Charge Balance (%) | | | | | | NA | | | 11.44% | | |
| Alkalinity (as CaCO3) | | | | | | 1.17E-01 | | | 1.19E-01 | | |
| pH (Dimensionless) | | | | | | 7.36E+00 | | | 5.50E+00 | | |
| Carbonate | 2 | -1 | 60 | | | 1.70E+02 | 2.80E-06 | 8.98E-04 | 0.00E+00 | 0.00E+00 | 0.00E+00 |
| Bicarbonate | 1 | -1 | 61 | | | 1.41E+05 | 2.31E-03 | 7.94E-01 | 1.33E+05 | 2.19E-03 | 0.86E-01 |
| TDS | | | | | | 6.84E+04 | | 3.42E-01 | 6.48E+04 | | 4.24E-01 |
| TSS | | | | | | 3.30E+02 | | 1.65E-03 | 3.30E+02 | | 1.65E-03 |
| Temperature (deg C) | | | | | | 1.85E+01 | | | 1.85E+01 | | |
| **Organics** | | | | | | | | | | | |
| Acetone | | | | | | 1.33E+01 | | 6.65E-05 | 1.33E+01 | | 6.65E-05 |
| 1-butanol | | | | | | 3.62E+01 | | 1.81E-04 | 3.62E+01 | | 1.81E-04 |
| 2-butanone | | | | | | 2.91E+01 | | 1.46E-04 | 2.91E+01 | | 1.46E-04 |
| BHT | | | | | | 1.35E+01 | | 6.74E-05 | 1.35E+01 | | 6.74E-05 |
| Hexane (MEK) | | | | | | 6.97E+00 | | 3.43E-05 | 6.97E+00 | | 3.43E-05 |
| Toluene | | | | | | 5.30E+00 | | 2.65E-05 | 5.30E+00 | | 2.65E-05 |
| Trichlorotrifluoro | | | | | | 5.10E+00 | | 2.50E-05 | 5.10E+00 | | 2.50E-05 |
| Methylene Chloride | | | | | | | | | | | |
| Tetrachloroethene | | | | | | 1.00E+00 | | 5.00E-06 | 1.00E+00 | | 5.00E-06 |
| Total Organic Carbon | | | | | | 8.00E+02 | | 4.40E-03 | 8.00E+02 | | 4.40E-03 |
| Total Carbon | | | | | | 1.19E+04 | | 5.95E-02 | 1.19E+04 | | 5.95E-02 |
| Total Organic Halides | | | | | | 2.42E+01 | | 1.21E-04 | 2.42E+01 | | 1.21E-04 |
| **For Calculations** | | | | | | | | | | | |
| **Radionuclides** | | | | | | (mg/L) | (pCi/L) | (pCi/hr) | (mg/L) | (pCi/L) | (pCi/hr) |
| Total Alpha | | | | | | | 4.99E+00 | 1.13E+04 | | 4.99E+00 | 1.13E+04 |
| Total Beta | | | | | | | 1.65E+00 | 3.75E+00 | | 1.65E+00 | 3.75E+00 |
| Am-241 | | | | | | 2.85E-06 | 7.83E+00 | 1.00E+04 | 2.85E-06 | 7.83E+00 | 1.00E+04 |
| Cm-242 | | | | | | 1.48E-11 | 4.83E-02 | 1.12E+02 | 1.48E-11 | 4.83E-02 | 1.12E+02 |
| Cm-244 | | | | | | 1.10E-09 | 8.97E-02 | 2.83E+02 | 1.10E-09 | 8.97E-02 | 2.83E+02 |
| Co-60 | | | | | | 8.37E-07 | 9.46E+02 | 2.15E+06 | 8.37E-07 | 9.46E+02 | 2.15E+06 |
| Cs-134 | | | | | | 1.17E-06 | 1.52E+03 | 3.46E+06 | 1.17E-06 | 1.52E+03 | 3.46E+06 |
| Cs-137 | | | | | | 2.53E-03 | 4.20E+05 | 9.77E+08 | 2.53E-03 | 4.20E+05 | 9.72E+08 |
| C-14 | | | | | | 9.58E-08 | 4.24E+01 | 9.63E+04 | 9.58E-08 | 4.24E+01 | 9.63E+04 |
| H-3 | | | | | | 5.72E-04 | 5.54E+00 | 1.26E+10 | 5.72E-04 | 5.54E+00 | 1.26E+10 |
| Mn-54 | | | | | | 2.58E-07 | 2.01E+03 | 4.57E+06 | 2.58E-07 | 2.01E+03 | 4.57E+06 |
| Pb-210 | | | | | | 1.44E-07 | 1.10E+01 | 2.50E+04 | 1.44E-07 | 1.10E+01 | 2.50E+04 |
| Pu-239 | | | | | | 6.37E-08 | 1.06E+00 | 2.40E+03 | 6.37E-08 | 1.06E+00 | 2.40E+03 |
| Pu-239/240 | | | | | | 9.25E-05 | 6.66E+00 | 1.51E+04 | 9.25E-05 | 6.66E+00 | 1.51E+04 |
| Radium | | | | | | 3.33E-08 | 3.30E-02 | 7.49E+01 | 3.33E-08 | 3.30E-02 | 7.49E+01 |
| Ru-106 | | | | | | 1.51E-06 | 1.01E+04 | 2.30E+07 | 1.51E-06 | 1.01E+04 | 2.30E+07 |
| Sr-90 | | | | | | 5.78E-03 | 1.00E+00 | 3.63E+06 | 5.78E-03 | 1.00E+00 | 3.63E+06 |
| U-234 | | | | | | 2.56E-05 | 1.09E-01 | 3.63E+07 | 2.56E-05 | 1.09E-01 | 3.63E+07 |
| U-235 | | | | | | 1.80E-02 | 2.17E-02 | 4.93E+01 | 1.80E-02 | 2.17E-02 | 4.93E+01 |
| U-238 | | | | | | 3.36E-01 | 1.13E-01 | 2.57E+07 | 3.36E-01 | 1.13E-01 | 2.57E+07 |

Alternative A

Design Criteria
Evaporation
Influent From H2SO4 Addition

| | |
|---|---|
| 10 Flow Rate,GPM | |
| K [NH4+=H+] | 6.3E-10 |
| K [HCO3-=CO3] | 5.6E-11 |
| 0.999 Concentration Factor | |
| 800 Hours of operation per year | |
| 400,000 Gal/yr treated effluent | |

Design Basis
Specific Activity

| | Sci/g | Sci/gmol |
|---|---|---|
| Am-241 | 3.43E+00 | 3.43E+12 |
| Cm-242 | 3.31E+03 | 3.31E+15 |
| Cm-244 | 8.10E+01 | 8.10E+13 |
| Co-60 | 1.13E+03 | 1.13E+15 |
| Cs-134 | 1.30E+03 | 1.30E+15 |
| Cs-137 | 1.00E+02 | 1.00E+14 |
| C-14 | 4.46E+00 | 4.46E+12 |
| H-3 | 9.00E+03 | 9.00E+15 |
| Mn-54 | 7.76E+00 | 7.76E+15 |
| Po-210 | 7.85E+01 | 7.85E+13 |
| Pu-238 | 1.71E+01 | 1.71E+13 |
| Pu-239/240 | 7.20E-02 | 7.20E+10 |
| Radium | 9.00E-01 | 9.00E+11 |
| Ru-106 | 6.00E+03 | 6.00E+15 |
| Sr-90 | 2.70E+02 | 2.70E+14 |
| U-234 | 6.25E-03 | 6.25E+00 |
| U-235 | 2.16E-06 | 2.16E+00 |
| U-238 | 3.36E-07 | 3.36E+05 |

| Chemical | Valence | Charge | MW | Cations (meq/L) | Anions (meq/L) | Concentrations (Pt. 6) After H2SO4 Addition (mg/L) | (Mol/L) | (lb/hr) | (DF) | Concentrations (Pt. 7) Exiting the Evaporator (mg/L) | (Mol/L) | Top (lb/hr) | (Pt. 8) Bottom (lb/hr) |
|---|---|---|---|---|---|---|---|---|---|---|---|---|---|
| **Inorganics** | | | | | | | | | | | | | |
| Ammonia (Total N) | | | 18 | | | 2.23E+02 | 1.24E-05 | 1.11E-03 | 100 | 2.23E+00 | 1.24E-07 | 1.11E-05 | 1.10E-03 |
| Ammonia | | | 17 | | | 3.73E-03 | 2.19E-10 | 1.86E-06 | | 3.73E-05 | 2.19E-12 | 1.86E-10 | 1.84E-06 |
| Ammonium | 1 | 1 | 18 | 1.24E-02 | 0.00E+00 | 2.23E+02 | 1.24E-05 | 1.11E-03 | | 2.23E+00 | 1.24E-07 | 1.11E-05 | 1.10E-03 |
| Aluminum | 3 | 1 | 27 | 5.05E-04 | 0.00E+00 | 5.36E+00 | 1.98E-07 | 2.67E-05 | 1000 | 5.36E-03 | 1.98E-10 | 2.67E-08 | 2.67E-05 |
| Antimony | 1 | 1 | 121.75 | 1.05E-04 | 0.00E+00 | 1.27E+01 | 1.05E-07 | 6.36E-05 | 1000 | 1.27E-02 | 1.05E-10 | 6.36E-08 | 6.35E-05 |
| Arsenic | 3 | 1 | 74.9 | 4.73E-04 | 0.00E+00 | 1.18E+01 | 1.58E-07 | 5.90E-05 | 1000 | 1.18E-02 | 1.58E-10 | 5.90E-08 | 5.90E-05 |
| Barium | 2 | 1 | 137.30 | 1.17E-03 | 0.00E+00 | 8.08E+01 | 5.83E-07 | 4.00E-04 | 1000 | 8.08E-02 | 5.83E-10 | 4.00E-07 | 3.99E-04 |
| Boron | 3 | 1 | 10.80 | 2.11E-02 | 0.00E+00 | 7.58E+01 | 7.02E-06 | 3.79E-04 | 1000 | 7.58E-02 | 7.02E-09 | 3.79E-07 | 3.78E-04 |
| Cadmium | 2 | 1 | 112.40 | 4.11E-05 | 0.00E+00 | 2.31E+00 | 2.05E-08 | 1.15E-05 | 1000 | 2.31E-03 | 2.05E-11 | 1.15E-09 | 1.15E-05 |
| Cesium | 2 | 1 | 40.10 | 1.13E+00 | 0.00E+00 | 2.28E+04 | 5.67E-04 | 1.14E-01 | 1000 | 2.28E+01 | 5.67E-07 | 1.14E-04 | 1.14E-01 |
| Chloride | 1 | -1 | 35.50 | 0.00E+00 | -7.32E-02 | 2.60E+03 | 7.32E-05 | 1.30E-02 | 1000 | 2.60E+00 | 7.32E-08 | 1.30E-05 | 1.30E-02 |
| Chromium | 2 | -1 | 52 | 0.00E+00 | -4.52E-05 | 1.10E+00 | 2.20E-08 | 5.68E-06 | 1000 | 1.10E-03 | 2.20E-11 | 5.68E-09 | 5.67E-06 |
| Cobalt | 2 | 1 | 59 | 0.00E+00 | 0.00E+00 | 0.00E+00 | 0.00E+00 | 0.00E+00 | 1000 | 0.00E+00 | 0.00E+00 | 0.00E+00 | 0.00E+00 |
| Copper | 2 | 1 | 63.55 | 4.10E-04 | 0.00E+00 | 1.30E+01 | 2.05E-07 | 6.53E-05 | 1000 | 1.30E-02 | 2.05E-10 | 6.53E-08 | 6.51E-05 |
| Fluoride | 1 | -1 | 20.10 | 0.00E+00 | -7.20E-03 | 2.04E+02 | 7.20E-06 | 1.02E-03 | 1000 | 2.04E-01 | 7.20E-09 | 1.02E-06 | 1.02E-03 |
| Iron | 2 | 1 | 55.80 | 3.71E-04 | 0.00E+00 | 1.03E+01 | 1.85E-07 | 5.17E-05 | 1000 | 1.03E-02 | 1.85E-10 | 5.17E-08 | 5.16E-05 |
| Lead | 2 | 1 | 207.2 | 1.30E-04 | 0.00E+00 | 1.44E+01 | 6.97E-08 | 7.22E-05 | 1000 | 1.44E-02 | 6.97E-11 | 7.22E-08 | 7.21E-05 |
| Magnesium | 2 | 1 | 24.30 | 5.00E-01 | 0.00E+00 | 6.81E+03 | 2.00E-04 | 3.40E-02 | 1000 | 6.81E+00 | 2.00E-07 | 3.40E-06 | 3.40E-02 |
| Manganese | 2 | 1 | 54.90 | 1.00E-03 | 0.00E+00 | 2.00E+01 | 5.20E-07 | 1.46E-04 | 1000 | 2.00E-02 | 5.20E-10 | 1.46E-07 | 1.46E-04 |
| Nickel | 2 | 1 | 58.7 | 2.50E-04 | 0.00E+00 | 7.50E+00 | 1.28E-07 | 3.75E-05 | 1000 | 7.50E-03 | 1.28E-10 | 3.75E-08 | 3.74E-05 |
| Nitrate | 1 | -1 | 62.00 | 0.00E+00 | -7.00E-03 | 4.30E+02 | 7.00E-06 | 2.15E-03 | 1000 | 4.30E-01 | 7.00E-09 | 2.15E-06 | 2.15E-03 |
| Phosphorus | 3 | -1 | 30.97 | 0.00E+00 | -1.94E-03 | 2.00E+01 | 6.46E-07 | 9.99E-06 | 1000 | 2.00E-02 | 6.46E-10 | 9.99E-09 | 9.98E-06 |
| Potassium | 1 | 1 | 39.10 | 7.52E-02 | 0.00E+00 | 2.94E+03 | 7.52E-05 | 1.47E-02 | 1000 | 2.94E+00 | 7.52E-08 | 1.47E-05 | 1.47E-02 |
| Selenium | 2 | 1 | 79 | 1.00E-03 | 0.00E+00 | 4.20E+01 | 5.32E-07 | 2.10E-04 | 1000 | 4.20E-02 | 5.32E-10 | 2.10E-07 | 2.10E-04 |
| Silicon | 2 | -1 | 28.10 | 0.00E+00 | -1.46E-02 | 2.04E+02 | 7.26E-06 | 1.02E-03 | 1000 | 2.04E-01 | 7.26E-09 | 1.02E-06 | 1.02E-03 |
| Silver | 1 | 1 | 107.9 | 3.00E-06 | 0.00E+00 | 4.17E-01 | 3.86E-09 | 2.08E-06 | 1000 | 4.17E-04 | 3.86E-12 | 2.08E-09 | 2.08E-06 |
| Sodium | 1 | 1 | 23.00 | 8.57E-01 | 0.00E+00 | 1.97E+04 | 8.57E-04 | 9.84E-02 | 1000 | 1.97E+01 | 8.57E-07 | 9.84E-05 | 9.83E-02 |
| Strontium | 2 | 1 | 87.60 | 1.81E-03 | 0.00E+00 | 7.94E+01 | 9.06E-07 | 3.97E-04 | 1000 | 7.94E-02 | 9.06E-10 | 3.97E-07 | 3.96E-04 |
| Sulfate | 2 | -1 | 96.06 | 0.00E+00 | -5.98E-01 | 2.87E+04 | 2.99E-04 | 1.43E-01 | 1000 | 2.87E+01 | 2.99E-07 | 1.43E-04 | 1.43E-01 |
| Uranium | 2 | 1 | 238.00 | 2.20E-06 | 0.00E+00 | 2.84E-01 | 1.19E-09 | 1.42E-06 | 1000 | 2.84E-04 | 1.19E-12 | 1.42E-09 | 1.42E-06 |
| Vanadium | 2 | 1 | 50.94 | 2.30E-04 | 0.00E+00 | 6.10E+00 | 1.20E-07 | 3.06E-05 | 1000 | 6.10E-03 | 1.20E-10 | 3.06E-08 | 3.04E-05 |
| Zinc | 2 | 1 | 65.40 | 1.88E-04 | 0.00E+00 | 5.50E+00 | 8.41E-08 | 2.75E-05 | 1000 | 5.50E-03 | 8.41E-11 | 2.75E-08 | 2.75E-05 |
| SUM INORGANICS | | | | | | 8.52E+04 | 2.21E-03 | 4.26E-01 | | 8.52E+01 | 2.43E-06 | 4.46E-04 | 4.25E-01 |
| Total Cations (meq/L) | | | | | | 2.87E+00 | | | | 2.78E-03 | | | |
| Total Anions (meq/L) | | | | | | -7.02E-01 | | | | -7.02E-04 | | | |
| Charge Balance (%) | | | | | | NA | | | | 00.00% | | | |
| Alkalinity (as CaCO3) | | | | | | 1.10E-01 | | | | 1.10E-01 | | | |
| pH (Dimensionless) | | | | | | 5.50E+00 | | | | 5.50E+00 | | | |
| Carbonate | 2 | -1 | 60 | | | 0.00E+00 | 0.00E+00 | 0.00E+00 | | 0.00E+00 | 0.00E+00 | 0.00E+00 | 0.00E+00 |
| Bicarbonate | 1 | -1 | 61 | | | 1.33E+05 | 2.18E-03 | 8.66E-01 | | 1.33E+05 | 2.18E-03 | 8.66E-01 | 8.66E+00 |
| TDS | | | | | | 8.48E+04 | | 4.24E-01 | 964.9415 | 8.80E+01 | | 4.44E-04 | 4.24E-01 |
| TSS | | | | | | 3.30E+02 | | 1.86E-03 | 1000 | 3.30E-01 | | 1.86E-06 | 1.86E-03 |
| Temperature (deg C) | | | | | | 1.86E+01 | | | | | | | |
| **Organics** | | | | Alpha | | | | | | | | | |
| Acetone | | | | 4.00 | | 1.33E+01 | | 6.66E-05 | 0.999745 | 1.33E+01 | | 6.66E-05 | -5.02E-08 |
| 1-butanol | | | | 0.40 | | 3.62E+01 | | 1.81E-04 | 1.001041 | 3.62E+01 | | 1.81E-04 | 1.88E-07 |
| 2-butanone | | | | 1.63 | | 2.91E+01 | | 1.46E-04 | 0.9996-46 | 2.91E+01 | | 1.46E-04 | -6.60E-08 |
| BHT | | | | 0.0003 | | 1.36E+01 | | 8.74E-05 | 4.332333 | 3.12E+00 | | 1.56E-05 | 5.19E-05 |
| Hexane (MIBK) | | | | 0.51 | | 6.87E+00 | | 3.43E-05 | 1.000061 | 6.88E+00 | | 3.43E-05 | 3.29E-08 |
| Toluene | | | | 0.72 | | 5.30E+00 | | 2.66E-05 | 1.000300 | 5.30E+00 | | 2.66E-05 | 1.04E-08 |
| Trichloromethane | | | | 3.00 | | 5.10E+00 | | 2.54E-05 | 0.999325 | 5.10E+00 | | 2.54E-05 | -1.75E-08 |
| Methylene Chloride | | | | | | | | | | | | | |
| Tetrachloroethene | | | | 1 | | 1.00E+00 | | 5.00E-06 | | 0 | | 0.00E+00 | 5.00E-06 |
| Total Organic Carbon | | | | 1 | | 8.00E+02 | | 4.40E-03 | | 8.00E+02 | | 4.40E-03 | 0.00E+00 |
| Total Carbon | | | | 1 | | 1.10E+04 | | 5.95E-02 | | 1.10E+04 | | 5.95E-02 | 0.00E+00 |
| Total Organic Halides | | | | 1 | | 2.42E+01 | | 1.21E-04 | | 2.42E+01 | | 1.21E-04 | 0.00E+00 |

| Radionuclides | (mg/L) | (pCi/L) | (pCi/hr) | (DF) | (mg/L) | (pCi/L) | Top (pCi/hr) | Bottom (pCi/hr) |
|---|---|---|---|---|---|---|---|---|
| Total Alpha | | 4.98E+00 | 1.13E+04 | 1000 | | 4.98E-03 | 1.13E+01 | 1.13E+04 |
| Total Beta | | 1.66E+00 | 3.75E+00 | 1 | | 1.66E+00 | 3.75E+00 | 0.00E+00 |
| Am-241 | 2.05E-06 | 7.03E+00 | 1.60E+04 | 1000 | 2.05E-09 | 7.03E-03 | 1.60E+01 | 1.59E+04 |
| Cm-242 | 1.49E-11 | 4.93E-02 | 1.12E+02 | 1000 | 1.49E-14 | 4.93E-05 | 1.12E-01 | 1.12E+02 |
| Cm-244 | 1.18E-08 | 8.92E-02 | 2.03E+02 | 1000 | 1.18E-12 | 8.92E-05 | 2.03E-01 | 2.02E+02 |
| Co-60 | 9.37E-07 | 9.46E+02 | 2.15E+06 | 1000 | 9.37E-10 | 9.46E-01 | 2.15E+03 | 2.15E+06 |
| Cs-134 | 1.17E-06 | 1.52E+03 | 3.46E+06 | 1000 | 1.17E-09 | 1.52E+00 | 3.46E+03 | 3.44E+06 |
| Cs-137 | 2.53E-03 | 4.28E+05 | 9.72E+08 | 1000 | 2.53E-06 | 4.28E+02 | 9.72E+05 | 9.71E+08 |
| C-14 | 9.50E-06 | 4.24E+01 | 9.63E+04 | 1000 | 9.50E-09 | 4.24E-02 | 9.63E+01 | 9.62E+04 |
| H-3 | 5.72E-04 | 5.54E+06 | 1.26E+10 | 1 | 5.72E-04 | 5.54E+06 | 1.26E+10 | 0.00E+00 |
| Mn-54 | 2.50E-07 | 2.01E+03 | 4.57E+06 | 1000 | 2.50E-10 | 2.01E+00 | 4.57E+03 | 4.57E+06 |
| Po-210 | 1.44E-07 | 1.10E+01 | 2.50E+04 | 1000 | 1.44E-10 | 1.10E-02 | 2.50E+01 | 2.50E+04 |
| Pu-238 | 8.37E-08 | 1.08E+00 | 2.46E+03 | 1000 | 8.37E-11 | 1.08E-03 | 2.46E+00 | 2.47E+03 |
| Pu-239/240 | 9.25E-05 | 6.66E+00 | 1.51E+04 | 1000 | 9.25E-08 | 6.66E-03 | 1.51E+01 | 1.51E+04 |
| Radium | 3.33E-06 | 3.30E-02 | 7.49E+01 | 1000 | 3.33E-11 | 3.30E-05 | 7.49E-02 | 7.49E+01 |
| Ru-106 | 1.51E-08 | 1.01E+04 | 2.30E+07 | 1000 | 1.51E-09 | 1.01E+01 | 2.30E+04 | 2.30E+07 |
| Sr-90 | 5.78E-03 | 1.60E+00 | 3.63E+09 | 1000 | 5.78E-06 | 1.60E+03 | 3.63E+06 | 3.63E+09 |
| U-234 | 2.56E-05 | 1.60E-01 | 3.63E+07 | 1000 | 2.56E-08 | 1.60E-04 | 3.63E-01 | 3.63E+02 |
| U-235 | 1.00E-02 | 2.17E-02 | 4.93E+01 | 1000 | 1.00E-05 | 2.17E-05 | 4.93E-02 | 4.92E+01 |
| U-238 | 3.36E-01 | 1.13E-01 | 2.57E+07 | 1000 | 3.36E-04 | 1.13E-04 | 2.57E-01 | 2.56E+07 |

Secondary Waste
Alternative A
Evaporation

| | |
|---|---|
| Assume: | 0.01 gpm of bottoms, or |
| | 0.6 gallons per hour |
| | 4.998 lb/hr bottoms, containing 8.5% by wt. solids |
| | 2.67 lb cement/lb bottoms to stabilize |
| | 8.33 lb/gal bottoms density |
| | 62.5 lb/ft3 bottoms |
| | 94 lb/ft3 dry cement |
| Total slurry volume = | 480 gallons/ year unstabilized |
| Cement required = | 114 ft3 cement/year |
| Stabilized volume = | 178 ft3/year |
| # of Drums Stabilized = | 24 Drums/year (1000 lb weight limit) |

Alternative A

Design Criteria
Ion Exchange
Influent From Filter

10 Flow Rate, GPM
K [HCO3==CO3] 0.30E-10
K [HCO3==CO3] 5.00E-11

10 Max Service Flow, GPM/ft2 (Vendor Data)
1.75 Min Service Flow, GPM/ft2 (Vendor Data)
24 Maximum IX Run Time, Hours
479520 Total Volume Treated, Gal/Yr

Assume Strong Acid Followed by Weak Base

2 Pairs of IX Columns

960 Hours of operation per year

Conversions
Specific Activity

| | Sa(ci/g) | Sa(pci/g) |
|---|---|---|
| Am-241 | 3.43E+00 | 3.43E+12 |
| Cm-242 | 3.31E+03 | 3.31E+15 |
| Cm-244 | 0.10E+01 | 0.10E+13 |
| Co-60 | 1.13E+03 | 1.13E+15 |
| Cs-134 | 1.30E+03 | 1.30E+15 |
| Cs-137 | 1.00E+02 | 1.00E+14 |
| C-14 | 4.46E+00 | 4.46E+12 |
| H-3 | 9.00E+03 | 9.00E+15 |
| Mn-54 | 7.76E+03 | 7.76E+15 |
| Pb-210 | 7.66E+01 | 7.66E+13 |
| Po-238 | 1.71E+01 | 1.71E+13 |
| Po-239/240 | 7.20E+02 | 7.20E+10 |
| Radium | 0.90E-01 | 0.90E+11 |
| Ru-106 | 0.00E+03 | 0.00E+15 |
| Sr-90 | 2.70E+02 | 2.70E+14 |
| U-234 | 0.25E-03 | 0.25E+00 |
| U-235 | 2.10E-06 | 2.10E+00 |
| U-238 | 3.30E-07 | 3.30E+00 |

| Chemical | Valence | Chg | MW | Cations (meq/L) | Anions (meq/L) | Point 7 Concentrations Entering Ion Exchange From Evaporator (mg/L) | (M/L) | (Ci/L) | DF Resid Assumed | Point 9 Concentrations Exiting Ion Exchange (mg/L) | (M/L) | (Ci/L) | Point 10 IX Column Load (Ci/yr) |
|---|---|---|---|---|---|---|---|---|---|---|---|---|---|
| **Inorganics** | | | | | | | | | | | | | |
| Ammonia (Total N) | | | 18 | | | 2.23E+00 | 1.24E-07 | 1.11E-05 | | 4.46E-02 | 2.48E-09 | 2.23E-07 | 1.00E-05 |
| Ammonia | | | 17 | | | 3.73E-05 | 2.19E-12 | 1.00E-10 | | 0.00E+00 | 0.00E+00 | 0.00E+00 | 1.00E-10 |
| Ammonium | 1 | 1 | 18 | 1.24E-04 | 0.00E+00 | 2.23E+00 | 1.24E-07 | 1.11E-05 | 50 | 4.46E-02 | 2.48E-09 | 2.23E-07 | 1.00E-05 |
| Aluminum | 3 | 1 | 27 | 5.95E-07 | 0.00E+00 | 5.36E-03 | 1.98E-10 | 2.67E-08 | 50 | 1.07E-04 | 3.96E-12 | 5.34E-10 | 2.62E-08 |
| Antimony | 1 | 1 | 121.75 | 1.05E-07 | 0.00E+00 | 1.27E-02 | 1.05E-10 | 6.35E-09 | 50 | 2.55E-04 | 2.09E-12 | 1.27E-09 | 6.23E-09 |
| Arsenic | 3 | 1 | 74.9 | 4.73E-07 | 0.00E+00 | 1.18E-02 | 1.58E-10 | 5.90E-09 | 50 | 2.36E-04 | 3.16E-12 | 1.18E-09 | 5.78E-09 |
| Barium | 2 | 1 | 137.30 | 1.17E-06 | 0.00E+00 | 0.00E-02 | 5.83E-10 | 3.90E-07 | 50 | 1.00E-03 | 1.17E-11 | 7.99E-09 | 3.91E-07 |
| Boron | 3 | 1 | 10.80 | 2.11E-05 | 0.00E+00 | 7.56E-03 | 7.02E-09 | 3.78E-07 | 50 | 1.52E-03 | 1.40E-10 | 7.57E-09 | 3.71E-07 |
| Cadmium | 2 | 1 | 112.40 | 4.11E-09 | 0.00E+00 | 7.21E-03 | 2.05E-11 | 1.15E-08 | 50 | 4.82E-05 | 4.11E-13 | 2.30E-10 | 1.13E-08 |
| Calcium | 2 | 1 | 40.10 | 1.13E-03 | 0.00E+00 | 2.29E+01 | 5.67E-07 | 1.14E-04 | 50 | 4.56E-01 | 1.13E-09 | 2.27E-06 | 1.11E-04 |
| Chloride | 1 | -1 | 35.50 | 0.00E+00 | -7.32E-05 | 2.60E+00 | 7.32E-08 | 1.30E-05 | 50 | 5.20E-02 | 1.46E-09 | 2.60E-07 | 1.27E-05 |
| Chromium | 2 | -1 | 52 | 0.00E+00 | -4.52E-05 | 1.18E-03 | 2.26E-11 | 5.87E-09 | 50 | 2.35E-05 | 4.52E-13 | 1.17E-10 | 5.75E-09 |
| Cobalt | 2 | 1 | 50 | 0.00E+00 | 0.00E+00 | 0.00E+00 | 0.00E+00 | 0.00E+00 | 50 | 0.00E+00 | 0.00E+00 | 0.00E+00 | 0.00E+00 |
| Copper | 2 | 1 | 63.54 | 4.10E-07 | 0.00E+00 | 1.30E-02 | 2.05E-10 | 6.51E-09 | 50 | 2.61E-04 | 4.10E-12 | 1.30E-09 | 6.38E-09 |
| Fluoride | 1 | -1 | 20.10 | 0.00E+00 | -7.20E-05 | 2.94E-01 | 7.20E-09 | 1.02E-06 | 50 | 4.08E-03 | 1.46E-10 | 2.04E-08 | 9.98E-07 |
| Iron | 2 | 1 | 55.80 | 3.71E-07 | 0.00E+00 | 1.03E-02 | 1.86E-10 | 5.16E-09 | 50 | 2.07E-04 | 3.71E-12 | 1.03E-09 | 5.06E-09 |
| Lead | 2 | 1 | 207.2 | 1.38E-07 | 0.00E+00 | 1.44E-02 | 6.97E-11 | 7.21E-09 | 50 | 2.88E-04 | 1.39E-12 | 1.44E-09 | 7.07E-09 |
| Magnesium | 2 | 1 | 24.30 | 5.00E-04 | 0.00E+00 | 6.81E+00 | 2.00E-07 | 3.40E-05 | 50 | 1.36E-01 | 5.00E-09 | 6.79E-07 | 3.33E-05 |
| Manganese | 2 | 1 | 54.94 | 1.00E-08 | 0.00E+00 | 2.99E-02 | 5.20E-10 | 1.49E-07 | 50 | 5.79E-04 | 1.00E-11 | 2.89E-09 | 1.42E-07 |
| Nickel | 2 | 1 | 58.7 | 2.54E-07 | 0.00E+00 | 7.50E-03 | 1.29E-10 | 3.74E-09 | 50 | 1.50E-04 | 2.54E-12 | 7.48E-10 | 3.67E-08 |
| Nitrate | 1 | -1 | 62.00 | 0.00E+00 | -7.90E-05 | 4.38E-01 | 7.90E-09 | 2.19E-06 | 50 | 8.76E-03 | 1.41E-10 | 4.37E-08 | 2.14E-06 |
| Phosphorus | 3 | -1 | 30.97 | 0.00E+00 | -1.94E-06 | 2.98E-02 | 6.46E-10 | 8.90E-09 | 50 | 4.00E-04 | 1.29E-11 | 2.00E-09 | 9.78E-08 |
| Potassium | 1 | 1 | 39.10 | 7.52E-06 | 0.00E+00 | 2.94E+00 | 7.52E-08 | 1.47E-05 | 50 | 5.88E-02 | 1.50E-09 | 2.94E-07 | 1.44E-05 |
| Selenium | 2 | 1 | 79 | 1.00E-06 | 0.00E+00 | 4.20E-02 | 5.32E-10 | 2.10E-07 | 50 | 8.40E-04 | 1.00E-11 | 4.19E-09 | 2.05E-07 |
| Silicon | 2 | -1 | 28.10 | 0.00E+00 | -1.46E-05 | 2.04E-01 | 7.29E-09 | 1.02E-06 | 50 | 4.08E-03 | 1.46E-10 | 2.04E-08 | 9.98E-07 |
| Silver | 1 | 1 | 107.9 | 3.80E-09 | 0.00E+00 | 4.17E-04 | 3.86E-12 | 2.08E-09 | 50 | 8.33E-06 | 7.72E-14 | 4.16E-11 | 2.04E-09 |
| Sodium | 1 | 1 | 23.00 | 8.57E-04 | 0.00E+00 | 1.07E+01 | 8.57E-07 | 9.83E-05 | 50 | 3.94E-01 | 1.71E-08 | 1.97E-06 | 9.64E-05 |
| Strontium | 2 | 1 | 87.60 | 1.91E-08 | 0.00E+00 | 7.94E-02 | 9.08E-10 | 3.96E-07 | 50 | 1.58E-03 | 1.91E-11 | 7.92E-09 | 3.88E-07 |
| Sulfate | 2 | -1 | 96.06 | 0.00E+00 | -5.00E-04 | 2.87E+01 | 2.98E-07 | 1.43E-04 | 50 | 5.74E-01 | 5.98E-09 | 2.86E-06 | 1.40E-04 |
| Uranium | 2 | 1 | 238.00 | 2.30E-09 | 0.00E+00 | 2.84E-04 | 1.19E-12 | 1.42E-09 | 50 | 5.68E-06 | 2.39E-14 | 2.84E-11 | 1.39E-09 |
| Vanadium | 2 | 1 | 50.94 | 2.30E-07 | 0.00E+00 | 6.10E-03 | 1.20E-10 | 3.04E-09 | 50 | 1.22E-04 | 2.39E-12 | 6.08E-10 | 2.98E-08 |
| Zinc | 2 | 1 | 65.40 | 1.00E-07 | 0.00E+00 | 5.30E-03 | 8.41E-11 | 2.75E-09 | 50 | 1.10E-04 | 1.68E-12 | 5.49E-10 | 2.69E-08 |
| Total Inorganics | | | | | | 8.92E+01 | 2.43E-06 | 4.46E-04 | | 1.78E+00 | 4.86E-09 | 8.91E-06 | 4.36E-04 |
| Total Cations (meq/L) | | | | | | 2.78E-03 | | | | 5.56E-05 | | | |
| Total Anions (meq/L) | | | | | | -7.62E-04 | | | | -1.48E-05 | | | |
| Charge Balance (%) | | | | | | NA | | | | 10.70% | | | |
| Alkalinity (as CaCO3) | | | | | | 1.10E-01 | | | | 1.00E-01 | | | |
| pH (Dimensionless) | | | | | | 5.50E+00 | | | | 5.50E+00 | | | |
| Carbonate | 2 | -1 | 60 | | 0.00E+00 | 0.00E+00 | 0.00E+00 | 0.00E+00 | | 0.00E+00 | 0.00E+00 | 0.00E+00 | 0.00E+00 |
| Bicarbonate | 1 | -1 | 61 | | -1.33E+00 | 1.33E+05 | 2.18E-03 | 6.04E-01 | | 1.33E+05 | 2.18E-03 | 6.03E-01 | 8.29E-04 |
| TDS | | | | | | 9.90E+01 | | 4.44E-04 | 50 | 1.78E+00 | | | |
| TSS | | | | | | 3.30E-01 | | 1.65E-06 | 1 | 3.30E-01 | | | |
| Temperature (deg C) | | | | | | 0.00E+00 | | | | 0.00E+00 | | | |
| **Organics** | | | | | | | | | | | | | |
| Acetone | | | | | | 1.33E+01 | | 6.65E-05 | 1 | 1.33E+01 | | 6.65E-05 | 0.00E+00 |
| 1-Butanol | | | | | | 3.62E+01 | | 1.00E-04 | 1 | 3.62E+01 | | 1.00E-04 | 0.00E+00 |
| 2-Butanone | | | | | | 2.91E+01 | | 1.46E-04 | 1 | 2.91E+01 | | 1.46E-04 | 0.00E+00 |
| BHT | | | | | | 3.12E+00 | | 1.56E-05 | 1 | 3.12E+00 | | 1.56E-05 | 0.00E+00 |
| Hexone (MIBK) | | | | | | 6.86E+00 | | 3.42E-05 | 1 | 6.86E+00 | | 3.42E-05 | 0.00E+00 |
| Toluene | | | | | | 5.36E+00 | | 2.67E-05 | 1 | 5.36E+00 | | 2.67E-05 | 0.00E+00 |
| Tetrachloroethane | | | | | | 5.19E+00 | | 2.59E-05 | 1 | 5.19E+00 | | 2.59E-05 | 0.00E+00 |
| Methylene Chloride | | | | | | 0.00E+00 | | 0.00E+00 | 1 | 0.00E+00 | | 0.00E+00 | 0.00E+00 |
| Tetrachloroethene | | | | | | 5 | | 0.00E+00 | 1 | 0.00E+00 | | 0.00E+00 | 0.00E+00 |
| Total Organic Carbon | | | | | | 0.00E+02 | | 4.30E-03 | 1 | 0.00E+02 | | 4.30E-03 | 0.00E+00 |
| Total Carbon | | | | | | 1.19E+04 | | 5.94E-02 | 1 | 1.19E+04 | | 5.94E-02 | 0.00E+00 |
| Total Organic Halides | | | | | | 2.42E+01 | | 1.21E-04 | 1 | 2.42E+01 | | 1.21E-04 | 0.00E+00 |
| **Radionuclides** | | | | | | (ng/L) | (pci/L) | (pci/yr) | | (ng/L) | (pci/L) | (pci/yr) | (pci/yr) |
| Total Alpha | | | | | | | 4.90E-03 | 1.12E+01 | 50 | | 9.80E-05 | 2.20E-01 | 1.11E+01 |
| Total Beta | | | | | | | 1.85E+00 | 3.74E+00 | 2 | | 0.71E+05 | 2.20E+00 | 1.54E+00 |
| Am-241 | | | | | | 2.86E-00 | 7.93E-02 | 1.58E+01 | 50 | 4.16E-11 | 1.41E-04 | 3.19E-01 | 1.56E+01 |
| Cm-242 | | | | | | 1.40E-14 | 4.93E-06 | 1.12E-01 | 50 | 2.89E-16 | 9.86E-07 | 2.24E-03 | 1.10E-01 |
| Cm-244 | | | | | | 1.18E-12 | 8.92E-06 | 2.02E-01 | 50 | 2.29E-14 | 1.78E-00 | 4.05E-03 | 1.98E-01 |
| Co-60 | | | | | | 9.37E-10 | 9.44E-01 | 2.16E+03 | 50 | 1.87E-11 | 1.88E-02 | 4.29E+01 | 2.10E+03 |
| Cs-134 | | | | | | 1.17E-00 | 1.52E+00 | 3.44E+03 | 50 | 2.34E-11 | 3.04E-02 | 6.88E+01 | 3.38E+03 |
| Cs-137 | | | | | | 2.53E-06 | 4.29E+02 | 9.71E+05 | 50 | 5.07E-09 | 8.58E+00 | 1.94E+04 | 9.52E+05 |
| C-14 | | | | | | 9.50E-06 | 4.24E-02 | 9.62E+01 | 1 | 9.50E-09 | 4.24E-02 | 9.62E+01 | 0.00E+00 |
| H-3 | | | | | | 5.72E-04 | 5.54E+06 | 1.26E+10 | 1 | 5.72E-04 | 5.54E+06 | 1.26E+10 | 0.00E+00 |
| Mn-54 | | | | | | 2.50E-10 | 2.01E+00 | 4.57E+03 | 50 | 5.10E-12 | 4.03E-02 | 9.14E+01 | 4.48E+03 |
| Pb-210 | | | | | | 1.44E-10 | 1.10E-02 | 2.50E+01 | 50 | 2.88E-12 | 2.20E-04 | 4.99E-01 | 2.45E+01 |
| Po-238 | | | | | | 6.37E-11 | 1.00E-03 | 2.47E+00 | 50 | 1.27E-12 | 2.19E-05 | 4.95E-02 | 2.42E+00 |
| Po-239/240 | | | | | | 0.25E-00 | 0.00E-03 | 1.51E+01 | 50 | 1.05E-09 | 1.33E-04 | 3.02E-01 | 1.48E+01 |
| Radium | | | | | | 3.33E-11 | 3.30E-06 | 7.49E-02 | 50 | 6.67E-13 | 6.60E-07 | 1.50E-03 | 7.34E-02 |
| Ru-106 | | | | | | 1.51E-00 | 1.01E+01 | 2.30E+04 | 50 | 3.02E-11 | 2.02E-01 | 4.58E+02 | 2.25E+04 |
| Sr-90 | | | | | | 5.70E-00 | 1.00E+03 | 3.63E+06 | 50 | 1.15E-07 | 3.20E+01 | 7.26E+04 | 3.56E+06 |
| U-234 | | | | | | 2.54E-00 | 1.00E-04 | 3.63E-01 | 50 | 5.12E-10 | 3.20E-00 | 7.26E-03 | 3.56E-01 |
| U-235 | | | | | | 1.00E-06 | 2.17E-06 | 4.92E-02 | 50 | 2.01E-07 | 4.34E-07 | 9.86E-04 | 4.82E-02 |
| U-238 | | | | | | 3.30E-04 | 1.13E-04 | 2.56E-01 | 50 | 6.73E-08 | 2.26E-06 | 5.13E-03 | 2.51E-01 |

Design Calculations for Ion Exchange System
Alternative A

Influent and Effluent Composition

| | Cations | Anions | |
|---|---|---|---|
| Influent | 0.002779 meq/L | 0.000702 meq/L | |
| Effluent | 0.000056 meq/L | 0.000014 meq/L | |
| Removed | 0.002724 meq/L | 0.000688 meq/L or | 0.002604 meq/Gal |

Strong Acid Resin Capacity

| | | | |
|---|---|---|---|
| % Sodium | 30.81735 % | Using Culligan Water Company Tables | |
| % Alkalinity | 100 % | Capacity | 37792.21 meq/ft3 |

Weak Base Resin Capacity

Using Culligan Water Company Tables
Capacity 27272.73 meq/ft3

Column Sizing Calculations

| | | |
|---|---|---|
| Strong Acid Resin Usage | 5.5E-07 ft3/gal | (assume safety factor of 2) |
| | 0.261619 ft3/yr | |
| Weak Base Resin Usage | 1.9E-07 ft3/gal | (assume safety factor of 2) |
| | 0.091556 ft3/yr | |
| Strong Acid Column Minimum Size | 0.007856 ft3 | |
| Weak Base Column Minimum Size | 0.002749 ft3 | |
| Chosen SA Size | 13 ft3 | |
| Chosen WB Size | 11 ft3 | |
| Minimum Column Diameter | 1.128378 ft | |
| Maximum Column Diameter | 2.697339 ft | |
| Chosen Size | 1.666667 ft | |
| Regeneration Waste | | |
| Strong Acid Column | 1052.92 Gal/Regen | |
| | 21.18954 Gal/Year | |
| Weak Base Column | 1052.92 Gal/Regen | |
| | 8.763773 Gal/Year | |
| Regeneration Time (SA Column) | 9.91902 Hrs/Regen | |

Regeneration Calculations

Chemicals

| | |
|---|---|
| H2SO4 | 2 wt% |
| NaOH | 4 wt% |

Backwash+Rinse 4 Bed Volumes Each Column

| | |
|---|---|
| Volume | 388.96 gal Each Column |
| Flowrate | 5 gpm/ft2 |
| Duration | 169.7162 min |

Regeneration

SA Column 12 #H2SO4/ft3

| | |
|---|---|
| Volume | 975 Gal/Column |
| Flowrate | 5 gpm/ft2 |
| Duration | 425.425 min |

WB Column 4 #NaOH/ft3

| | |
|---|---|
| Volume | 137.5 Gal/Column |
| Flowrate | 5 gpm/ft2 |
| Duration | 59.99583 min |

Alternative A

Design Criteria
Granulated Activated Carbon
Influent From Ion Exchange
800 Hours per year of operation
10 Flow Rate, GPM
K [NH4+=NH3] 6.30E-10
K [HCO3=CO3] 5.60E-11

4.5 Max Service Flow, GPM/ft2 (Vendor Data)
8 Min Service Flow, GPM/ft2 (Vendor Data)
300 Minimum GAC Run Time, Hours
479,520 Total Volume Treated, Gal/Yr

Design Basis
Specific Activity

| | Sa(pci/g) | Sa(g/pci) |
|---|---|---|
| Am-241 | 3.43E+00 | 3.43E+12 |
| Cm-242 | 3.31E+03 | 3.31E+15 |
| Cm-244 | 0.10E+01 | 0.10E+13 |
| Co-60 | 1.13E+03 | 1.13E+15 |
| Cs-134 | 1.30E+03 | 1.30E+15 |
| Cs-137 | 1.60E+02 | 1.60E+14 |
| C-14 | 4.46E+00 | 4.46E+12 |
| H-3 | 9.60E+03 | 9.60E+15 |
| Mn-54 | 7.70E+03 | 7.70E+15 |
| Pb-210 | 7.65E+01 | 7.65E+13 |
| Pu-238 | 1.71E+01 | 1.71E+13 |
| Pu-239/240 | 7.20E+02 | 7.20E+14 |
| Radium | 9.90E-01 | 9.90E+11 |
| Ru-106 | 6.60E+03 | 6.60E+15 |
| Sr-90 | 2.70E+02 | 2.70E+14 |
| U-234 | 0.25E+03 | 0.25E+00 |
| U-235 | 2.10E+00 | 2.10E+00 |
| U-238 | 3.30E-07 | 3.30E+05 |

| Chemical | Valence | Chg | MW | Cations (meq/L) | Anions (meq/L) | Point 9 Concentrations Entering GAC From Ion Exchange (ug/L) | (M/L) | (Lbs/Hr) | DF Resid Assumed | Point 12 Concentrations Exiting From GAC (ug/L) | (M/L) | (Lbs/Hr) | Carbon Load (Lbs/Hr) |
|---|---|---|---|---|---|---|---|---|---|---|---|---|---|
| **Inorganics** | | | | | | | | | | | | | |
| Ammonia (Total N) | | | 18 | | | 4.46E-02 | 2.48E-09 | 2.23E-07 | | | | | 0.00E+00 |
| Ammonia | | | 17 | | | 0.00E+00 | 0.00E+00 | 0.00E+00 | | | | | 0.00E+00 |
| Ammonium | 1 | 1 | 18 | 2.48E-09 | 0.00E+00 | 4.46E-02 | 2.48E-09 | 2.23E-07 | 1 | 4.46E-02 | 2.48E-09 | 2.23E-07 | 0.00E+00 |
| Aluminum | 3 | 1 | 27 | 1.10E-09 | 0.00E+00 | 1.07E-04 | 3.98E-12 | 5.34E-10 | 1 | 1.07E-04 | 3.98E-12 | 5.34E-10 | 0.00E+00 |
| Antimony | 1 | 1 | 121.75 | 2.98E-09 | 0.00E+00 | 2.55E-04 | 2.09E-12 | 1.27E-09 | 1 | 2.55E-04 | 2.09E-12 | 1.27E-09 | 0.00E+00 |
| Arsenic | 3 | 1 | 74.9 | 9.47E-09 | 0.00E+00 | 2.20E-04 | 3.10E-12 | 1.10E-09 | 1 | 2.20E-04 | 3.10E-12 | 1.10E-09 | 0.00E+00 |
| Barium | 2 | 1 | 137.36 | 2.33E-09 | 0.00E+00 | 1.00E-03 | 1.17E-11 | 7.99E-09 | 1 | 1.00E-03 | 1.17E-11 | 7.99E-09 | 0.00E+00 |
| Boron | 3 | 1 | 10.80 | 4.21E-07 | 0.00E+00 | 1.52E-03 | 1.40E-10 | 7.57E-09 | 1 | 1.52E-03 | 1.40E-10 | 7.57E-09 | 0.00E+00 |
| Cadmium | 2 | 1 | 112.40 | 8.21E-10 | 0.00E+00 | 4.62E-06 | 4.11E-13 | 2.30E-10 | 1 | 4.62E-06 | 4.11E-13 | 2.30E-10 | 0.00E+00 |
| Calcium | 2 | 1 | 40.10 | 2.27E-06 | 0.00E+00 | 4.55E-01 | 1.13E-08 | 2.27E-06 | 1 | 4.55E-01 | 1.13E-09 | 2.27E-06 | 0.00E+00 |
| Chloride | 1 | -1 | 35.50 | 0.00E+00 | -1.44E-06 | 5.20E-02 | 1.46E-09 | 2.60E-07 | 1 | 5.20E-02 | 1.46E-09 | 2.60E-07 | 0.00E+00 |
| Chromium | 2 | -1 | 52 | 0.00E+00 | -9.06E-10 | 2.36E-06 | 4.52E-13 | 1.17E-10 | 1 | 2.36E-06 | 4.52E-13 | 1.17E-10 | 0.00E+00 |
| Cobalt | 2 | 1 | 58 | 0.00E+00 | 0.00E+00 | 0.00E+00 | 0.00E+00 | 0.00E+00 | 1 | 0.00E+00 | 0.00E+00 | 0.00E+00 | 0.00E+00 |
| Copper | 2 | 1 | 63.55 | 8.21E-08 | 0.00E+00 | 2.61E-04 | 4.10E-12 | 1.30E-09 | 1 | 2.61E-04 | 4.10E-12 | 1.30E-09 | 0.00E+00 |
| Fluoride | 1 | -1 | 20.10 | 0.00E+00 | -1.46E-07 | 4.00E-03 | 1.46E-10 | 2.04E-08 | 1 | 4.00E-03 | 1.46E-10 | 2.04E-08 | 0.00E+00 |
| Iron | 2 | 1 | 55.80 | 7.42E-09 | 0.00E+00 | 2.07E-04 | 3.71E-12 | 1.03E-09 | 1 | 2.07E-04 | 3.71E-12 | 1.03E-09 | 0.00E+00 |
| Lead | 2 | 1 | 207.2 | 2.79E-09 | 0.00E+00 | 2.89E-04 | 1.39E-12 | 1.44E-09 | 1 | 2.89E-04 | 1.39E-12 | 1.44E-09 | 0.00E+00 |
| Magnesium | 2 | 1 | 24.30 | 1.12E-06 | 0.00E+00 | 1.36E-01 | 5.60E-09 | 6.79E-07 | 1 | 1.36E-01 | 5.60E-09 | 6.79E-07 | 0.00E+00 |
| Manganese | 2 | 1 | 54.94 | 2.11E-08 | 0.00E+00 | 5.79E-04 | 1.06E-11 | 2.89E-08 | 1 | 5.79E-04 | 1.06E-11 | 2.89E-08 | 0.00E+00 |
| Nickel | 2 | 1 | 58.7 | 5.11E-08 | 0.00E+00 | 1.50E-04 | 2.56E-12 | 7.49E-10 | 1 | 1.50E-04 | 2.56E-12 | 7.49E-10 | 0.00E+00 |
| Nitrate | 1 | -1 | 62.00 | 0.00E+00 | -1.41E-07 | 8.70E-03 | 1.41E-10 | 4.37E-08 | 1 | 8.70E-03 | 1.41E-10 | 4.37E-08 | 0.00E+00 |
| Phosphorus | 3 | -1 | 30.97 | 0.00E+00 | -3.87E-08 | 4.00E-04 | 1.29E-11 | 2.00E-08 | 1 | 4.00E-04 | 1.29E-11 | 2.00E-08 | 0.00E+00 |
| Potassium | 1 | 1 | 39.10 | 1.50E-08 | 0.00E+00 | 5.89E-02 | 1.50E-09 | 2.94E-07 | 1 | 5.89E-02 | 1.50E-09 | 2.94E-07 | 0.00E+00 |
| Selenium | 2 | 1 | 79 | 2.13E-09 | 0.00E+00 | 8.40E-04 | 1.06E-11 | 4.19E-09 | 1 | 8.40E-04 | 1.06E-11 | 4.19E-09 | 0.00E+00 |
| Silica | 2 | -1 | 28.10 | 0.00E+00 | -2.91E-07 | 4.08E-03 | 1.45E-10 | 2.04E-08 | 1 | 4.08E-03 | 1.45E-10 | 2.04E-08 | 0.00E+00 |
| Silver | 1 | 1 | 107.9 | 7.72E-11 | 0.00E+00 | 8.33E-06 | 7.72E-14 | 4.16E-11 | 1 | 8.33E-06 | 7.72E-14 | 4.16E-11 | 0.00E+00 |
| Sodium | 1 | 1 | 23.00 | 1.71E-06 | 0.00E+00 | 3.94E-01 | 1.71E-09 | 1.97E-06 | 1 | 3.94E-01 | 1.71E-09 | 1.97E-06 | 0.00E+00 |
| Strontium | 2 | 1 | 87.60 | 3.62E-09 | 0.00E+00 | 1.58E-03 | 1.81E-11 | 7.92E-09 | 1 | 1.58E-03 | 1.81E-11 | 7.92E-09 | 0.00E+00 |
| Sulfate | 2 | -1 | 96.06 | 0.00E+00 | -1.20E-06 | 5.74E-01 | 5.98E-09 | 2.86E-06 | 1 | 5.74E-01 | 5.98E-09 | 2.86E-06 | 0.00E+00 |
| Uranium | 2 | 1 | 238.03 | 4.77E-11 | 0.00E+00 | 5.68E-06 | 2.39E-14 | 2.84E-11 | 1 | 5.68E-06 | 2.39E-14 | 2.84E-11 | 0.00E+00 |
| Vanadium | 2 | 1 | 50.94 | 4.78E-09 | 0.00E+00 | 1.22E-04 | 2.39E-12 | 6.08E-10 | 1 | 1.22E-04 | 2.39E-12 | 6.08E-10 | 0.00E+00 |
| Zinc | 2 | 1 | 65.40 | 3.36E-09 | 0.00E+00 | 1.10E-04 | 1.68E-12 | 5.48E-10 | 1 | 1.10E-04 | 1.68E-12 | 5.48E-10 | 0.00E+00 |
| Total Inorganics | | | | | | 1.70E+00 | 4.08E-09 | 9.91E-08 | | 1.70E+00 | 4.02E-09 | 9.86E-08 | 0.00E+00 |
| Total Cations (meq/L) | | | | | | 5.56E-06 | | | | 5.56E-06 | | | |
| Total Anions (meq/L) | | | | | | -1.40E-06 | | | | -1.40E-06 | | | |
| Charge Balance (%) | | | | | | NA | | | | 0.00% | | | |
| Alkalinity (as CaCO3) | | | | | | 1.00E-01 | | | 1 | 1.00E-01 | | | |
| pH (Dimensionless) | | | | | | 5.50E+00 | | | | 5.50E+00 | | | |
| Carbonate | 2 | -1 | 60 | | 0.00E+00 | 0.00E+00 | 0.00E+00 | 0.00E+00 | 1 | 0.00E+00 | 0.00E+00 | 0.00E+00 | 0.00E+00 |
| Bicarbonate | 1 | -1 | 61 | | 0.00E+00 | 1.33E+05 | 2.18E-03 | 8.63E-01 | 1 | 1.33E+05 | 2.18E-03 | 8.63E-01 | 0.00E+00 |
| TDS | | | | | | 1.70E+00 | | 9.87E-08 | 1 | 1.70E+00 | | 9.87E-08 | 0.00E+00 |
| TSS | | | | | | 3.30E-01 | | 1.65E-08 | 1 | 3.30E-01 | | 1.65E-08 | 0.00E+00 |
| Temperature (deg C) | | | | | | 0.00E+00 | | | | 0.00E+00 | | | |
| **Organics** | | | | | | | | | | | | | |
| Acetone | | | | | | 1.33E+01 | | 6.65E-05 | 1 | 1.33E+01 | | 6.65E-05 | 0.00E+00 |
| 1-butanol | | | | | | 3.62E+01 | | 1.80E-04 | 100 | 3.62E-01 | | 1.80E-06 | 1.79E-04 |
| 2-butanone | | | | | | 2.91E+01 | | 1.45E-04 | 100 | 2.91E-01 | | 1.45E-06 | 1.44E-04 |
| BHT | | | | | | 3.12E+00 | | 1.56E-05 | 100 | 3.12E-02 | | 1.56E-07 | 1.54E-05 |
| Hexane (MIBK) | | | | | | 0.00E+00 | | 3.42E-05 | 100 | 0.00E-02 | | 3.42E-07 | 3.39E-05 |
| Toluene | | | | | | 5.30E+00 | | 2.67E-05 | 100 | 5.30E-02 | | 2.67E-07 | 2.65E-05 |
| Trichloroethane | | | | | | 5.10E+00 | | 2.56E-05 | 100 | 5.10E-02 | | 2.56E-07 | 2.57E-05 |
| Methylene Chloride | | | | | | 0.00E+00 | | 0.00E+00 | 100 | 0.00E+00 | | 0.00E+00 | 0.00E+00 |
| Tetrachloroethene | | | | | | 0.00E+00 | | 0.00E+00 | 100 | 0.00E+00 | | 0.00E+00 | 0.00E+00 |
| Total Organic Carbon | | | | | | 0.00E+02 | | 4.39E-03 | 100 | 0.00E+00 | | 4.39E-05 | 4.35E-03 |
| Total Carbon | | | | | | 1.19E+04 | | 5.94E-02 | 100 | 1.19E+02 | | 5.94E-04 | 5.88E-02 |
| Total Organic Halides | | | | | | 2.42E+01 | | 1.21E-04 | 100 | 2.42E-01 | | 1.21E-06 | 1.20E-04 |
| **Radionuclides** | | | | | | (ug/L) | (pci/L) | (pci/Hr) | | (ug/L) | (pci/L) | (pci/Hr) | (pci/Hr) |
| Total Alpha | | | | | | | 9.98E-06 | 2.20E-01 | 1 | | 9.98E-06 | 2.20E-01 | 0.00E+00 |
| Total Beta | | | | | | | 9.71E+05 | 2.20E+00 | 1 | | 9.71E+05 | 2.20E+00 | 0.00E+00 |
| Am-241 | | | | | | 4.10E-11 | 1.41E-04 | 3.10E-01 | 1 | 4.10E-11 | 1.41E-04 | 3.10E-01 | 0.00E+00 |
| Cm-242 | | | | | | 2.90E-10 | 9.96E-07 | 2.24E-03 | 1 | 2.90E-10 | 9.96E-07 | 2.24E-03 | 0.00E+00 |
| Cm-244 | | | | | | 2.20E-14 | 1.78E-08 | 4.00E-03 | 1 | 2.20E-14 | 1.78E-08 | 4.00E-03 | 0.00E+00 |
| Co-60 | | | | | | 1.67E-11 | 1.89E-02 | 4.20E+01 | 1 | 1.67E-11 | 1.89E-02 | 4.20E+01 | 0.00E+00 |
| Cs-134 | | | | | | 2.34E-11 | 3.04E-02 | 6.80E+01 | 1 | 2.34E-11 | 3.04E-02 | 6.80E+01 | 0.00E+00 |
| Cs-137 | | | | | | 5.07E-09 | 8.56E+00 | 1.94E+04 | 1 | 5.07E-09 | 8.56E+00 | 1.94E+04 | 0.00E+00 |
| C-14 | | | | | | 9.56E-09 | 4.24E-02 | 9.63E+01 | 1 | 9.56E-09 | 4.24E-02 | 9.62E+01 | 0.00E+00 |
| H-3 | | | | | | 5.72E-04 | 5.54E+00 | 1.26E+10 | 1 | 5.72E-04 | 5.54E+00 | 1.26E+10 | 0.00E+00 |
| Mn-54 | | | | | | 5.19E-12 | 4.83E-02 | 9.14E+01 | 1 | 5.19E-12 | 4.83E-02 | 9.14E+01 | 0.00E+00 |
| Pb-210 | | | | | | 2.89E-12 | 2.20E-04 | 4.99E-01 | 1 | 2.89E-12 | 2.20E-04 | 4.99E-01 | 0.00E+00 |
| Pu-238 | | | | | | 1.27E-12 | 2.10E-05 | 4.95E-02 | 1 | 1.27E-12 | 2.10E-05 | 4.95E-02 | 0.00E+00 |
| Pu-239/240 | | | | | | 1.85E-09 | 1.33E-04 | 3.02E-01 | 1 | 1.85E-09 | 1.33E-04 | 3.07E-01 | 0.00E+00 |
| Radium | | | | | | 6.67E-13 | 6.60E-07 | 1.50E-03 | 1 | 6.67E-13 | 6.60E-07 | 1.50E-03 | 0.00E+00 |
| Ru-106 | | | | | | 3.02E-11 | 2.02E-01 | 4.59E+02 | 1 | 3.02E-11 | 2.02E-01 | 4.59E+02 | 0.00E+00 |
| Sr-90 | | | | | | 1.15E-07 | 3.20E+01 | 7.26E+04 | 1 | 1.15E-07 | 3.20E+01 | 7.26E+04 | 0.00E+00 |
| U-234 | | | | | | 5.12E-10 | 3.20E-08 | 7.26E-03 | 1 | 5.12E-10 | 3.20E-08 | 7.26E-03 | 0.00E+00 |
| U-235 | | | | | | 2.01E-07 | 4.34E-07 | 9.86E-04 | 1 | 2.01E-07 | 4.34E-07 | 9.86E-04 | 0.00E+00 |
| U-238 | | | | | | 6.73E-06 | 2.26E-06 | 5.13E-03 | 1 | 6.73E-06 | 2.26E-06 | 5.13E-03 | 0.00E+00 |

| | |
|---|---|
| Design Calculations for GAC System | |
| Alternative A | |
| Carbon Exhaustion Calculated on | 880 ug/L TOC |
| Assumed Capture at Breakthrough | 0.002 ug TOC/ug Carbon |
| Carbon Density | 30 Lb/ft3 |
| | |
| Carbon Exhaustion Rate | 0.003664 Lb/Gal H2O Treated |
| | 0.073278 ft3/Hr Operation |
| | |
| | 58.56346 ft3/Yr |
| | 1.673242 Beds/Yr |
| | 477.6357 Hrs/Bed |
| | |
| Minimum Bed Volume | 26.37994 ft3 |
| Selected Bed Volume | 35 ft3 |
| Minimum Bed Diameter | 1.682086 ft |
| Selected Bed Diameter | 3.75 ft |

Alternative A

Design Criteria
pH Adjustment (PL 13)
effluent From Ion Exchange
479,520 Gal/yr treated effluent
10 Flow Rate, GPM
800 Hours per Year Treatment System is in use

4.3E-07 = K [H][CO3]/[HCO3] K [H][OH]/[H2O] 6.3E-10
K [HCO3]/[CO3] 5.6E-11

7 Needed pH
5.5 Incoming pH

pH Adjustment Calculations

| | | | |
|---|---|---|---|
| Initial HCO3 = | 2.19E-03 m | 0 m [H+O] initially | |
| Initial CO3 = | 0.00E+00 m | 0 m [H+H+] | |
| Initial H2CO3 = | 2.19E-03 m | | |
| x = | -7.19E-03 | Final H2CO3 = | 0.00E+00 m |
| z = | -3.00E-02 | Final HCO3 = | 0.00E+00 |
| y = | 2.37E-02 | Final CO3 = | 3.00E-02 |

Total H+ Required = 2.37E-02 mol/L NaOH 1.72E+03 kg/yr NaOH
9.48E+05 ug/L NaOH

Design Basis
Specific Activity

| | Sa(ci/g) | Sa(pci/g) |
|---|---|---|
| Am-241 | 3.43E+00 | 3.43E+12 |
| Cm-242 | 3.31E+03 | 3.31E+15 |
| Cm-244 | 0.10E+01 | 0.10E+13 |
| Co-60 | 1.13E+03 | 1.13E+15 |
| Cs-134 | 1.30E+03 | 1.30E+15 |
| Cs-137 | 1.88E+02 | 1.88E+14 |
| C-14 | 4.46E+00 | 4.46E+12 |
| H-3 | 9.88E+02 | 9.88E+15 |
| Mn-54 | 7.76E+03 | 7.76E+15 |
| Pb-210 | 7.66E+01 | 7.66E+13 |
| Pu-238 | 1.71E+01 | 1.71E+13 |
| Pu-239/240 | 7.20E-02 | 7.20E+10 |
| Radium | 9.00E-01 | 9.00E+11 |
| Ru-106 | 6.96E+03 | 6.96E+15 |
| Sr-90 | 2.78E+02 | 2.78E+14 |
| U-234 | 6.25E-03 | 6.25E+09 |
| U-235 | 2.16E-04 | 2.16E+08 |
| U-238 | 3.36E-07 | 3.36E+05 |

| Chemical | Valence | Chg | MW | Cations (meq/L) | Anions (meq/L) | Point 12 Concentrations Entering pH Adjustment From GAC (mg/L) | (M/L) | (Lbs/Hr) | Point 14 Concentrations Entering From pH Adjustment (mg/L) | (M/L) | (Lbs/Hr) |
|---|---|---|---|---|---|---|---|---|---|---|---|
| **Inorganics** | | | | | | | | | | | |
| Ammonia (Total N) | | | 18 | | | 4.46E-02 | 2.46E-09 | 2.23E-07 | 4.46E-02 | 2.46E-09 | 2.24E-07 |
| Ammonia | | | 17 | | | 0.00E+00 | 0.00E+00 | 0.00E+00 | 4.43E-02 | 2.46E-09 | 2.21E-07 |
| Ammonium | 1 | 1 | 18 | 2.46E-09 | 0.00E+00 | 4.46E-02 | 2.46E-09 | 2.23E-07 | 6.56E-04 | 3.16E-11 | 2.78E-09 |
| Aluminum | 3 | 1 | 27 | 1.19E-09 | 0.00E+00 | 1.07E-04 | 3.98E-12 | 5.34E-10 | 1.07E-04 | 3.98E-12 | 5.34E-10 |
| Antimony | 1 | 1 | 121.75 | 2.06E-09 | 0.00E+00 | 2.56E-04 | 2.08E-12 | 1.27E-09 | 2.56E-04 | 2.08E-12 | 1.27E-09 |
| Arsenic | 3 | 1 | 74.9 | 0.47E-09 | 0.00E+00 | 2.30E-04 | 3.16E-12 | 1.18E-09 | 2.30E-04 | 3.16E-12 | 1.18E-09 |
| Barium | 2 | 1 | 137.36 | 2.33E-09 | 0.00E+00 | 1.60E-03 | 1.17E-11 | 7.98E-09 | 1.60E-03 | 1.17E-11 | 7.98E-09 |
| Boron | 3 | 1 | 10.80 | 4.31E-07 | 0.00E+00 | 1.53E-03 | 1.40E-10 | 7.57E-09 | 1.53E-03 | 1.40E-10 | 7.57E-09 |
| Cadmium | 2 | 1 | 112.40 | 5.21E-10 | 0.00E+00 | 4.62E-05 | 4.11E-13 | 2.30E-10 | 4.62E-05 | 4.11E-13 | 2.30E-10 |
| Calcium | 2 | 1 | 40.16 | 7.27E-05 | 0.00E+00 | 4.56E-01 | 1.13E-09 | 2.27E-06 | 4.56E-01 | 1.13E-09 | 2.27E-06 |
| Chloride | 1 | -1 | 35.50 | 0.00E+00 | -1.46E-06 | 5.20E-02 | 1.46E-09 | 2.60E-07 | 5.20E-02 | 1.46E-09 | 2.60E-07 |
| Chromium | 2 | -1 | 52 | 0.00E+00 | -9.05E-10 | 2.35E-05 | 4.52E-13 | 1.17E-10 | 2.35E-05 | 4.52E-13 | 1.17E-10 |
| Cobalt | 2 | 1 | 59 | 0.00E+00 | 0.00E+00 | 0.00E+00 | 0.00E+00 | 0.00E+00 | 0.00E+00 | 0.00E+00 | 0.00E+00 |
| Copper | 2 | 1 | 63.55 | 9.21E-09 | 0.00E+00 | 2.61E-04 | 4.10E-12 | 1.30E-09 | 2.61E-04 | 4.10E-12 | 1.30E-09 |
| Fluoride | 1 | -1 | 29.10 | 0.00E+00 | -1.45E-07 | 4.06E-03 | 1.46E-10 | 2.04E-08 | 4.06E-03 | 1.46E-10 | 2.04E-08 |
| Iron | 2 | 1 | 55.80 | 7.42E-09 | 0.00E+00 | 2.07E-04 | 3.71E-12 | 1.03E-09 | 2.07E-04 | 3.71E-12 | 1.03E-09 |
| Lead | 2 | 1 | 207.2 | 2.79E-09 | 0.00E+00 | 2.90E-04 | 1.39E-12 | 1.44E-09 | 2.90E-04 | 1.39E-12 | 1.44E-09 |
| Magnesium | 2 | 1 | 24.30 | 1.12E-05 | 0.00E+00 | 1.36E-01 | 5.60E-09 | 6.79E-07 | 1.36E-01 | 5.60E-09 | 6.79E-07 |
| Manganese | 2 | 1 | 54.94 | 2.11E-09 | 0.00E+00 | 5.79E-04 | 1.06E-11 | 2.89E-09 | 5.79E-04 | 1.06E-11 | 2.89E-09 |
| Nickel | 2 | 1 | 58.7 | 5.11E-09 | 0.00E+00 | 1.50E-04 | 2.56E-12 | 7.48E-10 | 1.50E-04 | 2.56E-12 | 7.48E-10 |
| Nitrate | 1 | -1 | 62.00 | 0.00E+00 | -1.41E-07 | 8.76E-03 | 1.41E-10 | 4.37E-08 | 8.76E-03 | 1.41E-10 | 4.37E-08 |
| Phosphorous | 3 | -1 | 30.97 | 0.00E+00 | -3.07E-08 | 4.00E-04 | 1.29E-11 | 2.00E-09 | 4.00E-04 | 1.29E-11 | 2.00E-09 |
| Potassium | 1 | 1 | 39.10 | 1.50E-09 | 0.00E+00 | 5.80E-02 | 1.50E-09 | 2.94E-07 | 5.80E-02 | 1.50E-09 | 2.94E-07 |
| Selenium | 2 | 1 | 79 | 2.13E-09 | 0.00E+00 | 9.40E-04 | 1.06E-11 | 4.19E-09 | 9.40E-04 | 1.06E-11 | 4.19E-09 |
| Silicon | 2 | -1 | 28.10 | 0.00E+00 | -2.01E-07 | 4.00E-03 | 1.46E-10 | 2.04E-08 | 4.00E-03 | 1.46E-10 | 2.04E-08 |
| Silver | 1 | 1 | 107.9 | 7.72E-11 | 0.00E+00 | 8.33E-06 | 7.72E-14 | 4.16E-11 | 8.33E-06 | 7.72E-14 | 4.16E-11 |
| Sodium | 1 | 1 | 23.00 | 1.71E-05 | 0.00E+00 | 3.94E-01 | 1.71E-09 | 1.97E-06 | 5.46E-05 | 2.37E-02 | 2.72E+00 |
| Strontium | 2 | 1 | 87.60 | 3.62E-09 | 0.00E+00 | 1.58E-03 | 1.81E-11 | 7.92E-09 | 1.58E-03 | 1.81E-11 | 7.92E-09 |
| Sulfate | 2 | -1 | 96.00 | 0.00E+00 | -1.20E-05 | 5.74E-01 | 5.00E-09 | 2.86E-06 | 5.74E-01 | 5.00E-09 | 2.86E-06 |
| Uranium | 2 | 1 | 238.00 | 4.77E-11 | 0.00E+00 | 5.66E-06 | 2.38E-14 | 2.84E-11 | 5.66E-06 | 2.38E-14 | 2.84E-11 |
| Vanadium | 2 | 1 | 50.94 | 4.79E-09 | 0.00E+00 | 1.22E-04 | 2.39E-12 | 6.00E-10 | 1.22E-04 | 2.39E-12 | 6.00E-10 |
| Zinc | 2 | 1 | 65.40 | 3.36E-09 | 0.00E+00 | 1.10E-04 | 1.68E-12 | 5.49E-10 | 1.10E-04 | 1.68E-12 | 5.49E-10 |
| Total Inorganics | | | | | | 1.74E+00 | 4.06E-09 | 9.91E-06 | 5.46E+05 | 2.37E-02 | 2.72E+00 |
| Total Cations (meq/L) | | | | | | 5.56E-05 | | | 2.37E+01 | | |
| Total Anions (meq/L) | | | | | | -1.46E-05 | | | -1.46E-05 | | |
| Charge Balance (%) | | | | | | 0.00E+00 | | | | | |
| Alkalinity (as CaCO3) | | | | | | 1.00E-01 | | | 3.12E+00 | | |
| pH (Dimensionless) | | | | | | 5.56E+00 | | | 7.00E+00 | | |
| Carbonate | 2 | -1 | 60 | | | 0.00E+00 | 0.00E+00 | 0.00E+00 | 1.95E-04 | 3.09E-02 | 9.20E+00 |
| Bicarbonate | 1 | -1 | 61 | | | 1.33E+05 | 2.19E-03 | 6.63E-01 | 0.00E+00 | 0.00E+00 | 0.00E+00 |
| TDS | | | | | | 1.79E+00 | | 8.87E-06 | 1.79E+00 | | [illegible] |
| TSS | | | | | | 3.30E-01 | | 1.65E-06 | 3.30E-01 | | 1.65E-06 |
| Temperature (deg C) | | | | | | 0.00E+00 | | | 0.00E+00 | | |
| **Organics** | | | | | | | | | | | |
| Acetone | | | | | | 1.33E+01 | | 6.66E-05 | 1.33E+01 | | 6.66E-05 |
| 1-butanol | | | | | | 3.62E-01 | | 1.80E-06 | 3.62E-01 | | 1.80E-06 |
| 2-butanone | | | | | | 2.91E-01 | | 1.46E-06 | 2.91E-01 | | 1.46E-06 |
| BHT | | | | | | 3.12E-02 | | 1.56E-07 | 3.12E-02 | | 1.56E-07 |
| Hexone (MIBK) | | | | | | 6.86E-02 | | 3.42E-07 | 6.86E-02 | | 3.42E-07 |
| Toluene | | | | | | 5.30E-02 | | 2.67E-07 | 5.30E-02 | | 2.67E-07 |
| Trichloroethane | | | | | | 5.10E-02 | | 2.56E-07 | 5.10E-02 | | 2.56E-07 |
| Methylene Chloride | | | | | | 0.00E+00 | | 0.00E+00 | 0.00E+00 | | 0.00E+00 |
| Tetrachloroethane | | | | | | 0.00E+00 | | 0.00E+00 | 0.00E+00 | | 0.00E+00 |
| Total Organic Carbon | | | | | | 0.00E+00 | | 4.30E-05 | 0.00E+00 | | 4.30E-05 |
| Total Carbon | | | | | | 1.10E+02 | | 5.94E-04 | 1.10E+02 | | 5.94E-04 |
| Total Organic Halides | | | | | | 2.43E-01 | | 1.21E-06 | 2.43E-01 | | 1.21E-06 |
| **Radionuclides** | | | | | | (ug/L) | (pm/L) | (pm/Hr) | (ug/L) | (pm/L) | (pm/Hr) |
| Total Alpha | | | | | | | 9.00E-05 | 2.20E-01 | | 9.00E-05 | 2.20E-01 |
| Total Beta | | | | | | | 9.71E+05 | 2.20E+00 | | 9.71E+05 | 2.20E+00 |
| Am-241 | | | | | | 4.10E-11 | 1.41E-04 | 3.10E-01 | 4.10E-11 | [illegible] | 3.10E-01 |
| Cm-242 | | | | | | 2.90E-10 | 9.00E-07 | 2.24E-03 | 2.90E-10 | 9.00E-07 | 2.24E-03 |
| Cm-244 | | | | | | 2.20E-14 | 1.78E-08 | 4.06E-03 | 2.20E-14 | 1.78E-08 | 4.06E-03 |
| Co-60 | | | | | | 1.67E-11 | 1.80E-02 | 4.20E+01 | 1.67E-11 | [illegible] | 4.20E+01 |
| Cs-134 | | | | | | 2.34E-11 | 3.04E-02 | 6.80E+01 | 2.34E-11 | 3.04E-02 | [illegible] |
| Cs-137 | | | | | | 5.87E-08 | 8.54E+00 | 1.94E+04 | 5.87E-08 | 8.54E+00 | 1.94E+04 |
| C-14 | | | | | | 9.54E-06 | 4.24E-02 | 9.62E+01 | 9.54E-06 | 4.24E-02 | 9.62E+01 |
| H-3 | | | | | | 5.72E-04 | 5.54E+06 | 1.26E+10 | 5.72E-04 | 5.54E+06 | 1.26E+10 |
| Mn-54 | | | | | | 5.19E-12 | 4.63E-02 | 9.14E+01 | 5.19E-12 | 4.63E-02 | 9.14E+01 |
| Pb-210 | | | | | | 2.00E-12 | 2.29E-04 | 4.99E-01 | 2.00E-12 | 2.29E-04 | 4.99E-01 |
| Pu-238 | | | | | | 1.27E-12 | 2.19E-06 | 4.95E-02 | 1.27E-12 | 2.19E-06 | 4.95E-02 |
| Pu-239/240 | | | | | | 1.86E-09 | 1.33E-04 | 3.02E-01 | 1.86E-09 | 1.33E-04 | 3.02E-01 |
| Radium | | | | | | 6.67E-13 | 6.00E-07 | 1.56E-03 | 6.67E-13 | 6.00E-07 | 1.56E-03 |
| Ru-106 | | | | | | 3.02E-11 | 2.02E-01 | 4.58E+02 | 3.02E-11 | 2.02E-01 | 4.58E+02 |
| Sr-90 | | | | | | 1.15E-07 | 3.20E+01 | 7.26E+04 | 1.15E-07 | 3.20E+01 | 7.26E+04 |
| U-234 | | | | | | 5.12E-10 | 3.20E-06 | 7.26E-03 | 5.12E-10 | 3.20E-06 | 7.26E-03 |
| U-235 | | | | | | 2.01E-07 | 4.34E-07 | 9.86E-04 | 2.01E-07 | 4.34E-07 | 9.86E-04 |
| U-238 | | | | | | 6.73E-06 | 2.26E-06 | 5.13E-03 | 6.73E-06 | 2.26E-06 | 5.13E-03 |

Alternative A

Design Criteria
8.00E+01 mg/L of Hardness

| Chemical | Final Effluent Concentrations (ug/L) | Columbia River Concentrations (ug/L) | Effluent Limits Chronic (ug/L) | Effluent Limits Acute (ug/L) | Overall (DF) | Toxic Pounds Removed Factor | Toxic Pounds Removed (Lbs/yr) |
|---|---|---|---|---|---|---|---|
| **Inorganics** | | | | | | | |
| Ammonia (Total N) | 4.49E-02 | 8.00E+01 | 2.00E+03 | 1.85E+04 | 4.97E+03 | 4.48E-03 | 4.00E-03 |
| Ammonia | 4.43E-02 | | | | 6.76E+01 | | |
| Ammonium | 5.58E-04 | | | | 3.94E+05 | | |
| Aluminum | 1.07E-04 | | 5.00E+01 | | 3.55E+05 | 1.53E-01 | 2.32E-02 |
| Antimony | 2.55E-04 | | 1.50E+03 | 9.00E+03 | 5.50E+04 | 5.99E-03 | 3.35E-04 |
| Arsenic | 2.36E-04 | 1.20E+00 | 1.90E+02 | 3.60E+02 | 5.50E+04 | 7.06E-02 | 3.67E-03 |
| Barium | 1.60E-03 | 2.65E+01 | 1.00E+03 | | 6.50E+04 | 7.84E-03 | 3.18E-03 |
| Boron | 1.52E-03 | | | | 5.50E+04 | | 0.00E+00 |
| Cadmium | 4.62E-05 | | 7.59E-01 | 2.20E+00 | 6.50E+04 | 1.50E+01 | 1.80E-01 |
| Calcium | 4.55E-01 | 1.64E+04 | | | 5.00E+04 | | 0.00E+00 |
| Chloride | 5.20E-02 | 1.98E+03 | 2.50E+05 | | 5.00E+04 | 3.06E-05 | 3.18E-04 |
| Chromium | 2.35E-05 | | 1.10E+01 | 1.60E+01 | 2.55E+05 | 1.38E+00 | 3.31E-02 |
| Cobalt | 0.00E+00 | | | | | | 0.00E+00 |
| Copper | 2.61E-04 | | 7.84E+00 | 1.10E+01 | 1.15E+05 | 2.00E+00 | 2.39E-01 |
| Fluoride | 4.08E-03 | 1.00E+02 | 4.00E+03 | | 5.00E+04 | 1.91E-03 | 1.56E-03 |
| Iron | 2.07E-04 | 5.07E+01 | 1.00E+03 | | 8.85E+05 | 7.84E-03 | 5.47E-03 |
| Lead | 2.89E-04 | | 1.86E+00 | 4.26E+01 | 1.35E+05 | 4.66E+00 | 7.58E-01 |
| Magnesium | 1.36E-01 | 3.65E+03 | | | 5.00E+04 | | 0.00E+00 |
| Manganese | 5.79E-04 | 6.78E+00 | 5.00E+01 | | 1.50E+05 | 1.53E-01 | 5.31E-02 |
| Nickel | 1.50E-04 | 6.00E+00 | 1.02E+02 | 9.21E+02 | 6.00E+04 | 6.66E-02 | 3.11E-03 |
| Nitrate | 6.76E-03 | | 1.00E+04 | | 5.00E+04 | 7.84E-04 | 1.34E-03 |
| Phosphorous | 4.00E-04 | 2.00E+01 | | | 5.00E+04 | | 0.00E+00 |
| Potassium | 5.88E-02 | 6.41E+02 | | | 6.00E+04 | | 0.00E+00 |
| Selenium | 6.40E-04 | | 3.50E+01 | 2.60E+02 | 5.00E+04 | 2.60E-01 | 4.37E-02 |
| Silicon | 4.06E-03 | 1.84E+03 | | | 5.00E+05 | | 0.00E+00 |
| Silver | 6.33E-06 | | 1.20E-01 | 1.69E+00 | 6.00E+04 | 7.02E+01 | 1.40E-01 |
| Sodium | 5.46E+05 | 1.63E+03 | | | 3.61E-02 | | 0.00E+00 |
| Strontium | 1.59E-03 | 6.30E+01 | | | 5.50E+04 | | 0.00E+00 |
| Sulfate | 5.74E-01 | 9.76E+03 | 2.50E+05 | | 2.11E+04 | 3.06E-05 | 1.46E-03 |
| Uranium | 5.68E-06 | 6.06E-01 | | | 5.00E+05 | | 0.00E+00 |
| Vanadium | 1.22E-04 | | | | 5.00E+04 | | 0.00E+00 |
| Zinc | 1.10E-04 | 5.75E+00 | 6.66E+01 | 7.59E+01 | 1.10E+05 | 2.55E-01 | 1.24E-02 |
| Total Inorganics | 5.46E+05 | | | | 1.31E-01 | | |
| Total Cations (meq/L) | 2.37E+01 | | | | 1.14E-01 | | |
| Total Anions (meq/L) | -1.40E-05 | | | | 3.47E+04 | | |
| Charge Balance (%) | | | | | | | |
| Alkalinity (as CaCO3) | 3.12E+00 | 5.40E+04 | | | | | |
| pH (Dimensionless) | 7.00E+00 | 8.30E+00 | | | | | |
| Carbonate | 1.85E+06 | 6.00E+02 | | | | | |
| Bicarbonate | 0.00E+00 | 6.44E+04 | | | | | |
| TDS | 1.78E+00 | 6.94E+04 | | | 3.85E+04 | | |
| TSS | 3.30E-01 | 3.00E+03 | | | 9.10E+03 | | |
| Temperature (deg C) | | 1.66E+01 | | | | | |
| **Organics** | | | | | | | |
| Acetone | 1.33E+01 | | | | 1.30E+00 | | 0.00E+00 |
| 1-butanol | 3.62E-01 | | | | 1.00E+02 | | 0.00E+00 |
| 2-butanone | 2.91E-01 | | | | 1.00E+02 | | 0.00E+00 |
| BHT | 3.12E-02 | | | | 4.33E+02 | | 0.00E+00 |
| Hexone (MIBK) | 6.86E-02 | | | | 1.50E+02 | | 0.00E+00 |
| Toluene | 5.36E-02 | | 1.43E+04 | 1.75E+04 | 1.00E+02 | 1.18E-03 | 2.48E-05 |
| Trichloromethane | 5.19E-02 | | 1.24E+03 | 2.89E+04 | 9.99E+01 | 6.54E-03 | 1.34E-04 |
| Methylene Chloride | 0.00E+00 | | 5.00E+00 | | | 1.53E+00 | 0.00E+00 |
| Tetrachloroethene | 0.00E+00 | | 8.40E+02 | 5.28E+03 | ERR | 1.12E-02 | 4.47E-05 |
| Total Organic Carbon | 6.50E+00 | 1.66E+03 | | | 1.00E+02 | | |
| Total Carbon | 1.19E+02 | 1.48E+04 | | | 1.00E+02 | | |
| Total Organic Halides | 2.42E-01 | 1.06E+02 | | | 1.00E+02 | | |
| **Radionuclides** | (pci/L) | (pci/L) | (pci/L) | | | | |
| Total Alpha | 9.96E-05 | 7.60E-01 | 3.00E-01 | | 5.00E+05 | | |
| Total Beta | 9.71E+05 | 9.60E-01 | 3.00E+01 | | 1.70E+00 | | |
| Am-241 | 1.41E-04 | | 3.00E+01 | | 5.00E+05 | 6.40E+05 | 5.25E-02 |
| Cm-242 | 9.66E-07 | | 1.00E+03 | | 5.00E+05 | 1.85E+07 | 1.10E-05 |
| Cm-244 | 1.78E-06 | | 6.00E+01 | | 5.00E+05 | 7.58E+06 | 3.33E-04 |
| Co-60 | 1.89E-02 | | 1.00E+04 | | 3.70E+05 | 8.33E+05 | 1.57E-02 |
| Cs-134 | 3.04E-02 | | 2.00E+03 | | 5.50E+04 | 3.64E+06 | 1.87E-02 |
| Cs-137 | 8.86E+00 | | 3.00E+03 | | 5.50E+04 | 3.15E+05 | 3.51E+00 |
| C-14 | 4.24E-02 | | 7.00E+04 | | 1.00E+03 | 3.57E+02 | 1.35E-05 |
| H-3 | 5.54E+06 | 3.74E+02 | 2.00E+06 | | 1.00E+00 | 2.71E+04 | 0.00E+00 |
| Mn-54 | 4.03E-02 | | 5.00E+04 | | 1.50E+05 | 8.69E+05 | 2.70E-03 |
| Pb-210 | 2.20E-04 | | 3.00E+01 | | 1.35E+05 | 1.43E+07 | 2.22E-02 |
| Pu-238 | 2.18E-05 | 1.32E-01 | 4.00E+01 | | 5.00E+05 | 2.40E+06 | 6.10E-03 |
| Pu-239/240 | 1.33E-04 | 7.00E-02 | 3.00E+01 | | 5.00E+05 | 1.34E+04 | 4.97E-02 |
| Radium | 6.60E-07 | 1.42E-01 | 1.00E+02 | | 5.00E+05 | 5.54E+04 | 7.39E-05 |
| Ru-106 | 2.02E-01 | | 8.00E+03 | | 6.50E+04 | 6.24E+06 | 8.42E-02 |
| Sr-90 | 3.20E+01 | 3.64E-01 | 1.00E+03 | | 5.50E+04 | 1.56E+06 | 3.94E+01 |
| U-234 | 3.20E-06 | | 5.00E+02 | | 5.00E+05 | 7.00E+01 | 7.18E-05 |
| U-235 | 4.34E-07 | | 6.00E+02 | | 5.00E+05 | 2.02E-02 | 8.10E-06 |
| U-238 | 2.26E-06 | | 6.00E+02 | | 5.00E+05 | 3.14E-03 | 4.22E-05 |
| | | | | Total Toxic Pounds Removed per Year | | | 43.1536 |

# APPENDIX B

## ALTERNATIVE B
## TREATMENT EQUIPMENT SIZING AND SECONDARY WASTE CALCULATIONS

This page intentionally left blank.

# ALTERNATIVE B
# TREATMENT EQUIPMENT SIZING, AND
# SECONDARY WASTE CALCULATIONS

Appendix B consists of spreadsheets and tables that represent waste stream treatment calculations, treatment system equipment sizing calculations, and calculations of the secondary waste streams generated for Alternative B. Each spreadsheet typically presents one of these calculations for each specific unit or process in the treatment train.

The first table presented for each unit or process shows how the concentration of each contaminant is affected by the specific treatment unit or process. The concentrations in the stream exiting each treatment unit or process are calculated by dividing the contaminant concentrations entering the treatment unit/process by the decontamination factor (DF) noted on each table. Based on the concentrations and flow rates, the mass of the contaminant entering and exiting the unit or process is also presented. The mass of secondary wastes are noted by the difference between the influents and effluent masses.

Spreadsheet calculations related to secondary wastes are attached following the treatment calculation spreadsheet for each specific treatment unit or process.

Spreadsheets showing sizing and general design calculations are presented for IX or GAC treatment units.

Assumptions for specific calculations are generally noted on each corresponding spreadsheet.

Alternative B

Design Criteria
Filtration
Influent From Equalization Tank

10 Flow Rate,GPM
K [NH4+<==>NH3] 6.3E-10
K [HCO3-<==>CO3] 5.6E-11
3 ppm Body Feed
800 Hours of Operation per Year
480,000 Gal/yr treated effluent
6 pounds of precoat per backflush

Design Basis
Specific Activity

| | Sa(ci/g) | Sa(pci/g) |
|---|---|---|
| Am-241 | 3.43E+00 | 3.43E+12 |
| Cm-242 | 3.31E+03 | 3.31E+15 |
| Cm-244 | 8.10E+01 | 8.10E+13 |
| Co-60 | 1.13E+03 | 1.13E+15 |
| Cs-134 | 1.30E+03 | 1.30E+15 |
| Cs-137 | 1.00E+02 | 1.00E+14 |
| C-14 | 4.46E+00 | 4.46E+12 |
| H-3 | 9.68E+03 | 9.68E+15 |
| Mn-54 | 7.70E+03 | 7.70E+15 |
| Pb-210 | 7.86E+01 | 7.86E+13 |
| Pu-238 | 1.71E+01 | 1.71E+13 |
| Pu-239/240 | 7.20E-02 | 7.20E+10 |
| Radium | 9.90E-01 | 9.90E+11 |
| Ru-106 | 6.68E+03 | 6.68E+15 |
| Sr-90 | 2.70E+02 | 2.70E+14 |
| U-234 | 6.25E-03 | 6.25E+09 |
| U-235 | 2.16E-06 | 2.16E+06 |
| U-238 | 3.36E-07 | 3.36E+05 |

| | | | | Cations | Anions | Concentrations (Pt. 1) Before DE Addition | | | Concentrations (Pt. 2) Entering Filtration | | | | Concentrations Exiting Filtration Unit (Pt 3) | | | (Pt. 4) Bottom |
|---|---|---|---|---|---|---|---|---|---|---|---|---|---|---|---|---|
| Chemical | Valence | Charge | MW | (meq/L) | (meq/L) | (ug/L) | (Mol/L) | (lbs/hr) | (ug/L) | (Mol/L) | (lbs/hr) | (DF) | (ug/L) | (Mol/L) | (lbs/hr) | (lbs/hr) |
| Inorganics | | | | | | | | | | | | | | | | |
| Ammonia (Total N) | | | 18 | | | 2.23E+02 | 1.24E-05 | 1.11E-03 | 2.23E+02 | 1.24E-05 | 1.11E-03 | 1 | 2.23E+02 | 1.24E-05 | 1.11E-03 | 0.00E+00 |
| Ammonia | | | 17 | | | 3.00E+00 | 1.5873E-08 | 1.50E-05 | 3.00E+00 | 1.58E-08 | 1.50E-05 | 1 | 3.00E+00 | 1.58E-08 | 1.50E-05 | 0.00E+00 |
| Ammonium | 1 | 1 | 18 | 1.22E-02 | 0.00E+00 | 2.20E+02 | 1.24E-05 | 1.10E-03 | 2.20E+02 | 1.24E-05 | 1.10E-03 | 1 | 2.20E+02 | 1.24E-05 | 1.10E-03 | 0.00E+00 |
| Aluminum | 3 | 1 | 27 | 4.22E-03 | 0.00E+00 | 3.80E+01 | 1.41E-06 | 1.90E-04 | 3.80E+01 | 1.41E-06 | 1.90E-04 | 7.1 | 5.35E+00 | 1.98E-07 | 2.67E-05 | 1.63E-04 |
| Antimony | 1 | 1 | 121.75 | 1.15E-04 | 0.00E+00 | 1.40E+01 | 1.15E-07 | 6.99E-06 | 1.40E+01 | 1.15E-07 | 6.99E-06 | 1.1 | 1.27E+01 | 1.05E-07 | 6.34E-06 | 6.34E-06 |
| Arsenic | 3 | 1 | 74.9 | 5.21E-04 | 0.00E+00 | 1.30E+01 | 1.74E-07 | 6.50E-06 | 1.30E+01 | 1.74E-07 | 6.50E-06 | 1.1 | 1.18E+01 | 1.58E-07 | 5.90E-06 | 5.90E-06 |
| Barium | 2 | 1 | 137.30 | 1.51E-03 | 0.00E+00 | 1.04E+02 | 7.57E-07 | 5.20E-04 | 1.04E+02 | 7.57E-07 | 5.20E-04 | 1.3 | 8.00E+01 | 5.83E-07 | 4.00E-04 | 1.20E-04 |
| Boron | 3 | 1 | 10.80 | 2.32E-02 | 0.00E+00 | 8.34E+01 | 7.72E-06 | 4.17E-04 | 8.34E+01 | 7.72E-06 | 4.17E-04 | 1.1 | 7.58E+01 | 7.02E-06 | 3.79E-04 | 3.79E-05 |
| Cadmium | 2 | 1 | 112.40 | 5.34E-05 | 0.00E+00 | 3.00E+00 | 2.67E-08 | 1.50E-05 | 3.00E+00 | 2.67E-08 | 1.50E-05 | 1.3 | 2.31E+00 | 2.05E-08 | 1.15E-05 | 3.46E-06 |
| Calcium | 2 | 1 | 40.10 | 1.13E+00 | 0.00E+00 | 2.28E+04 | 5.67E-04 | 1.14E-01 | 2.28E+04 | 5.67E-04 | 1.14E-01 | 1 | 2.28E+04 | 5.67E-04 | 1.14E-01 | 0.00E+00 |
| Chloride | 1 | -1 | 35.50 | 0.00E+00 | -7.22E-02 | 2.60E+03 | 7.32E-05 | 1.30E-02 | 2.60E+03 | 7.32E-05 | 1.30E-02 | 1 | 2.60E+03 | 7.32E-05 | 1.30E-02 | 0.00E+00 |
| Chromium | 2 | -1 | 52 | 0.00E+00 | -2.31E-04 | 6.00E+00 | 1.15E-07 | 3.00E-05 | 6.00E+00 | 1.15E-07 | 3.00E-05 | 5.1 | 1.18E+00 | 2.26E-08 | 5.88E-06 | 2.41E-05 |
| Cobalt | 2 | 1 | 59 | 0.00E+00 | 0.00E+00 | 0.00E+00 | 0.00E+00 | 0.00E+00 | 0.00E+00 | 0.00E+00 | 0.00E+00 | 1 | 0.00E+00 | 0.00E+00 | 0.00E+00 | 0.00E+00 |
| Copper | 2 | 1 | 63.55 | 9.44E-04 | 0.00E+00 | 3.00E+01 | 4.72E-07 | 1.50E-04 | 3.00E+01 | 4.72E-07 | 1.50E-04 | 2.3 | 1.30E+01 | 2.05E-07 | 6.52E-05 | 8.47E-05 |
| Fluoride | 1 | -1 | 20.10 | 0.00E+00 | -7.20E-03 | 2.04E+02 | 7.20E-06 | 1.02E-03 | 2.04E+02 | 7.20E-06 | 1.02E-03 | 1 | 2.04E+02 | 7.20E-06 | 1.02E-03 | 0.00E+00 |
| Iron | 2 | 1 | 55.80 | 8.42E-03 | 0.00E+00 | 1.79E+02 | 3.21E-06 | 8.94E-04 | 1.79E+02 | 3.21E-06 | 8.94E-04 | 17.3 | 1.03E+01 | 1.85E-07 | 5.17E-05 | 8.43E-04 |
| Lead | 2 | 1 | 207.2 | 3.76E-04 | 0.00E+00 | 3.90E+01 | 1.88E-07 | 1.95E-04 | 3.90E+01 | 1.88E-07 | 1.95E-04 | 2.7 | 1.44E+01 | 6.97E-08 | 7.22E-05 | 1.23E-04 |
| Magnesium | 2 | 1 | 24.30 | 5.80E-01 | 0.00E+00 | 6.81E+03 | 2.80E-04 | 3.40E-02 | 6.81E+03 | 2.80E-04 | 3.40E-02 | 1 | 6.81E+03 | 2.80E-04 | 3.40E-02 | 0.00E+00 |
| Manganese | 2 | 1 | 54.90 | 3.17E-03 | 0.00E+00 | 8.68E+01 | 1.58E-06 | 4.34E-04 | 8.68E+01 | 1.58E-06 | 4.34E-04 | 3 | 2.89E+01 | 5.26E-07 | 1.45E-04 | 2.89E-04 |
| Nickel | 2 | 1 | 58.7 | 3.07E-04 | 0.00E+00 | 9.00E+00 | 1.53E-07 | 4.50E-05 | 9.00E+00 | 1.53E-07 | 4.50E-05 | 1.2 | 7.50E+00 | 1.28E-07 | 3.75E-05 | 7.48E-06 |
| Nitrate | 1 | -1 | 62.00 | 0.00E+00 | -7.06E-03 | 4.38E+02 | 7.06E-06 | 2.19E-03 | 4.38E+02 | 7.06E-06 | 2.19E-03 | 1 | 4.38E+02 | 7.06E-06 | 2.19E-03 | 0.00E+00 |
| Phosphorus | 3 | -1 | 30.97 | 0.00E+00 | -1.94E-03 | 2.00E+01 | 6.46E-07 | 9.99E-05 | 2.00E+01 | 6.46E-07 | 9.99E-05 | 1 | 2.00E+01 | 6.46E-07 | 9.99E-05 | 0.00E+00 |
| Potassium | 1 | 1 | 39.10 | 9.03E-02 | 0.00E+00 | 3.53E+03 | 9.03E-05 | 1.76E-02 | 3.53E+03 | 9.03E-05 | 1.76E-02 | 1.2 | 2.94E+03 | 7.52E-05 | 1.47E-02 | 2.94E-03 |
| Selenium | 2 | 1 | 79 | 1.08E-03 | 0.00E+00 | 4.20E+01 | 5.32E-07 | 2.10E-04 | 4.20E+01 | 5.32E-07 | 2.10E-04 | 1 | 4.20E+01 | 5.32E-07 | 2.10E-04 | 0.00E+00 |
| Silicon | 2 | -1 | 28.10 | 0.00E+00 | -1.45E-01 | 2.04E+03 | 7.26E-05 | 1.02E-02 | 2.04E+03 | 7.26E-05 | 1.02E-02 | 10 | 2.04E+02 | 7.26E-06 | 1.02E-03 | 9.18E-03 |
| Silver | 1 | 1 | 107.9 | 4.63E-06 | 0.00E+00 | 5.00E-01 | 4.63E-09 | 2.50E-06 | 5.00E-01 | 4.63E-09 | 2.50E-06 | 1.2 | 4.17E-01 | 3.86E-09 | 2.08E-06 | 4.16E-07 |
| Sodium | 1 | 1 | 23.00 | 8.57E-01 | 0.00E+00 | 1.97E+04 | 8.57E-04 | 9.84E-02 | 1.97E+04 | 8.57E-04 | 9.84E-02 | 1 | 1.97E+04 | 8.57E-04 | 9.84E-02 | 0.00E+00 |
| Strontium | 2 | 1 | 87.60 | 1.99E-03 | 0.00E+00 | 8.73E+01 | 9.97E-07 | 4.36E-04 | 8.73E+01 | 9.97E-07 | 4.36E-04 | 1.1 | 7.94E+01 | 9.06E-07 | 3.97E-04 | 3.97E-05 |
| Sulfate | 2 | -1 | 96.00 | 0.00E+00 | -2.52E-01 | 1.21E+04 | 1.26E-04 | 6.05E-02 | 1.21E+04 | 1.26E-04 | 6.05E-02 | 1 | 1.21E+04 | 1.26E-04 | 6.05E-02 | 0.00E+00 |
| Uranium | 2 | 1 | 238.00 | 2.30E-05 | 0.00E+00 | 2.84E+00 | 1.19E-08 | 1.42E-05 | 2.84E+00 | 1.19E-08 | 1.42E-05 | 10 | 2.84E-01 | 1.19E-09 | 1.42E-06 | 1.28E-05 |
| Vanadium | 2 | 1 | 50.94 | 2.30E-04 | 0.00E+00 | 6.10E+00 | 1.20E-07 | 3.05E-05 | 6.10E+00 | 1.20E-07 | 3.05E-05 | 1 | 6.10E+00 | 1.20E-07 | 3.05E-05 | 0.00E+00 |
| Zinc | 2 | 1 | 65.40 | 3.70E-04 | 0.00E+00 | 1.21E+01 | 1.85E-07 | 6.05E-05 | 1.21E+01 | 1.85E-07 | 6.05E-05 | 2.2 | 5.50E+00 | 8.41E-08 | 2.75E-05 | 3.30E-05 |
| Diatomaceous Earth | | | | | | 0.00E+00 | | 0.00E+00 | 3.00E+03 | | 1.50E-02 | 100 | 3.00E+01 | | 1.50E-04 | 1.48E-02 |
| SUM INORGANICS | | | | | | 7.14E+04 | 2.12E-03 | 3.57E-01 | 7.14E+04 | 2.12E-03 | 3.57E-01 | 1.040583 | 6.86E+04 | 2.04E-03 | 3.43E-01 | 1.39E-02 |
| Total Cations (meq/L) | | | | | | 2.70E+00 | | | 2.70E+00 | | | | 2.67E+00 | | | |
| Total Anions (meq/L) | | | | | | -4.87E-01 | | | -4.87E-01 | | | | -3.50E-01 | | | |
| Charge Balance (%) | | | | | | NA | | | NA | | | | 5.87% | | | |
| Alkalinity (as CaCO3) | | | | | | 1.12E-01 | | | 1.12E-01 | | | | 1.17E-01 | | | |
| pH (Dimensionless) | | | | | | 7.30E+00 | | | 7.30E+00 | | | | 7.30E+00 | | | |
| Carbonate | 2 | -1 | 60 | | | 1.70E+02 | 2.83E-06 | 8.49E-04 | 1.70E+02 | 2.83E-06 | 8.49E-04 | 0.954585 | 1.70E+02 | 2.80E-06 | 8.88E-04 | -3.86E-05 |
| Bicarbonate | 1 | -1 | 61 | | | 1.35E+05 | 2.21E-03 | 6.73E-01 | 1.35E+05 | 2.21E-03 | 6.73E-01 | 0.954585 | 1.41E+05 | 2.31E-03 | 7.04E-01 | -3.06E-02 |
| TDS | | | | | | 6.84E+04 | | 3.42E-01 | 6.84E+04 | | 3.42E-01 | 1 | 6.84E+04 | | 3.42E-01 | 0.00E+00 |
| TSS | | | | | | 3.00E+03 | • | 1.50E-02 | 6.00E+03 | | 3.00E-02 | 18.2 | 3.30E+02 | | 1.65E-03* | 2.83E-02 |
| Temperature (deg C) | | | | | | 1.85E+01 | | | | | | | 1.85E+01 | | | |
| Organics | | | | | | | | | | | | | | | | |
| Acetone | | | | | | 1.73E+01 | | 8.64E-05 | 1.73E+01 | | 8.64E-05 | 1.3 | 1.33E+01 | | 6.65E-05 | 1.99E-05 |
| 1-butanol | | | | | | 3.62E+01 | | 1.81E-04 | 3.62E+01 | | 1.81E-04 | 1 | 3.62E+01 | | 1.81E-04 | 0.00E+00 |
| 2-butanone | | | | | | 2.91E+01 | | 1.45E-04 | 2.91E+01 | | 1.45E-04 | 1 | 2.91E+01 | | 1.45E-04 | 0.00E+00 |
| BHT | | | | | | 1.35E+01 | | 6.74E-05 | 1.35E+01 | | 6.74E-05 | 1 | 1.35E+01 | | 6.74E-05 | 0.00E+00 |
| Hexone (MIBK) | | | | | | 1.03E+01 | | 5.15E-05 | 1.03E+01 | | 5.15E-05 | 1.5 | 6.87E+00 | | 3.43E-05 | 1.72E-05 |
| Toluene | | | | | | 5.30E+00 | | 2.65E-05 | 5.30E+00 | | 2.65E-05 | 1 | 5.30E+00 | | 2.65E-05 | 0.00E+00 |
| Trichloromethane | | | | | | 5.10E+00 | | 2.55E-05 | 5.10E+00 | | 2.55E-05 | 1 | 5.10E+00 | | 2.55E-05 | 0.00E+00 |
| Methylene Chloride | | | | | | | | | | | | 1 | 0.00E+00 | | 0.00E+00 | 0.00E+00 |
| Tetrachloroethane | | | | | | 1.00E+00 | | 5.00E-06 | 1.00E+00 | | 5.00E-06 | 1 | 1.00E+00 | | 5.00E-06 | 0.00E+00 |
| Total Organic Carbon | | | | | | 8.80E+02 | | 4.40E-03 | 8.80E+02 | | 4.40E-03 | 1 | 8.80E+02 | | 4.40E-03 | 0.00E+00 |
| Total Carbon | | | | | | 1.19E+04 | | 5.95E-02 | 1.19E+04 | | 5.95E-02 | 1 | 1.19E+04 | | 5.95E-02 | 0.00E+00 |
| Total Organic Halides | | | | | | 2.42E+01 | | 1.21E-04 | 2.42E+01 | | 1.21E-04 | 1 | 2.42E+01 | | 1.21E-04 | 0.00E+00 |
| Radionuclides | | | | | | (ug/L) | (pCi/L) | (pCi/hr) | (ug/L) | (pCi/L) | (pCi/hr) | (DF) | (ug/L) | (pCi/L) | (pCi/hr) | (pCi/hr) |
| Total Alpha | | | | | | | 4.00E+01 | 1.13E+05 | | 4.00E+01 | 1.13E+05 | 10 | | 4.00E+00 | 1.13E+04 | 1.02E+05 |
| Total Beta | | | | | | | 1.65E+06 | 3.75E+09 | | 1.65E+06 | 3.75E+09 | 1 | | 1.65E+06 | 3.75E+09 | 0.00E+00 |
| Am-241 | | | | | | 2.05E-05 | 7.03E+01 | 1.60E+05 | 2.05E-05 | 7.03E+01 | 1.60E+05 | 10 | 2.05E-06 | 7.03E+00 | 1.60E+04 | 1.44E+05 |
| Cm-242 | | | | | | 1.40E-10 | 4.63E-01 | 1.12E+03 | 1.40E-10 | 4.63E-01 | 1.12E+03 | 10 | 1.40E-11 | 4.63E-02 | 1.12E+02 | 1.01E+03 |
| Cm-244 | | | | | | 1.10E-08 | 8.92E-01 | 2.03E+03 | 1.10E-08 | 8.92E-01 | 2.03E+03 | 10 | 1.10E-09 | 8.92E-02 | 2.03E+02 | 1.82E+03 |
| Co-60 | | | | | | 6.19E-06 | 7.00E+03 | 1.59E+07 | 6.19E-06 | 7.00E+03 | 1.59E+07 | 7.4 | 8.37E-07 | 9.46E+02 | 2.15E+06 | 1.37E+07 |
| Cs-134 | | | | | | 1.29E-06 | 1.67E+03 | 3.79E+06 | 1.29E-06 | 1.67E+03 | 3.79E+06 | 1.1 | 1.17E-06 | 1.52E+03 | 3.45E+06 | 3.45E+05 |
| Cs-137 | | | | | | 2.70E-03 | 4.71E+05 | 1.07E+09 | 2.70E-03 | 4.71E+05 | 1.07E+09 | 1.1 | 2.53E-03 | 4.29E+05 | 9.72E+08 | 9.72E+07 |
| C-14 | | | | | | 9.50E-06 | 4.24E+01 | 9.63E+04 | 9.50E-06 | 4.24E+01 | 9.63E+04 | 1 | 9.50E-06 | 4.24E+01 | 9.63E+04 | 0.00E+00 |
| H-3 | | | | | | 5.72E-04 | 5.54E+06 | 1.26E+10 | 5.72E-04 | 5.54E+06 | 1.26E+10 | 1 | 5.72E-04 | 5.54E+06 | 1.26E+10 | 0.00E+00 |
| Mn-54 | | | | | | 7.70E-07 | 6.04E+03 | 1.37E+07 | 7.70E-07 | 6.04E+03 | 1.37E+07 | 3 | 2.50E-07 | 2.01E+03 | 4.57E+06 | 9.14E+06 |
| Pb-210 | | | | | | 3.80E-07 | 2.97E+01 | 6.74E+04 | 3.80E-07 | 2.97E+01 | 6.74E+04 | 2.7 | 1.44E-07 | 1.10E+01 | 2.50E+04 | 4.25E+04 |
| Pu-238 | | | | | | 6.37E-07 | 1.09E+01 | 2.48E+04 | 6.37E-07 | 1.09E+01 | 2.48E+04 | 10 | 6.37E-08 | 1.09E+00 | 2.48E+03 | 2.23E+04 |
| Pu-239/240 | | | | | | 9.25E-04 | 6.66E+01 | 1.51E+05 | 9.25E-04 | 6.66E+01 | 1.51E+05 | 10 | 9.25E-05 | 6.66E+00 | 1.51E+04 | 1.36E+05 |
| Radium | | | | | | 3.33E-07 | 3.30E-01 | 7.49E+02 | 3.33E-07 | 3.30E-01 | 7.49E+02 | 10 | 3.33E-08 | 3.30E-02 | 7.49E+01 | 6.74E+02 |
| Ru-106 | | | | | | 2.57E-06 | 1.72E+04 | 3.91E+07 | 2.57E-06 | 1.72E+04 | 3.91E+07 | 1.7 | 1.51E-06 | 1.01E+04 | 2.30E+07 | 1.61E+07 |
| Sr-90 | | | | | | 6.33E-03 | 1.70E+06 | 4.00E+09 | 6.33E-03 | 1.70E+06 | 4.00E+09 | 1.1 | 5.76E-03 | 1.60E+06 | 3.63E+09 | 3.63E+08 |
| U-234 | | | | | | 2.56E-04 | 1.60E+00 | 3.63E+03 | 2.56E-04 | 1.60E+00 | 3.63E+03 | 10 | 2.56E-05 | 1.60E-01 | 3.63E+02 | 3.27E+03 |
| U-235 | | | | | | 1.00E-01 | 2.17E-01 | 4.93E+02 | 1.00E-01 | 2.17E-01 | 4.93E+02 | 10 | 1.00E-02 | 2.17E-02 | 4.93E+01 | 4.44E+02 |
| U-238 | | | | | | 3.36E+00 | 1.13E+00 | 2.57E+03 | 3.36E+00 | 1.13E+00 | 2.57E+03 | 10 | 3.36E-01 | 1.13E-01 | 2.57E+02 | 2.31E+03 |

Secondary Waste Volumes
Alternative B
Filtration

| | | |
|---|---|---|
| Assume: | 1,335 | Gal/sq ft before backflush, based on LETF data |
| | 480,000 | Gal/yr effluent |
| | 58.8 | ft2 of area, Mott LSI Filter, operated per vendor |
| | 8.33 | lb/Gal backflush water and filter solids mixed |
| | 104.4 | Gal H2O /backflush (assuming 2 filter volumes to backflush) |
| Feed Solids: | 2.83E-02 | lbs per hour |
| Precoat: | 6 | lbs per hour |
| Number of Operating Hours to Backflush | 130.83 | hrs/backflush |
| Number of Backflushes per year | 6 | backflushes/yr |
| Volume of Backflushes per Year | 638.3096 | gal/yr |
| Per year will generate | 5,317 | kg of unstabilized filter solids and backflush water |
| Assume: | 1 | lb cement/lb solid slurry to stabilize |
| | 94 | lb/ft3 dry Portland cement density |
| Portland Cement Required = | 56.5651 | ft3 per year |
| Stabilized Volume = | 141.7753 | ft3 per year |
| # of Drums of Stabilized Product | 19.28145 | Drums per year |

Alternative B

| Design Criteria | | Conversions | | |
|---|---|---|---|---|
| Ion Exchange | | Specific Activity | Bq/(d/g) | Bq/(pCi/g) |
| Influent From Filter | | Am-241 | 3.43E+00 | 3.43E+12 |
| 10 Flow Rate, GPM | | Cm-242 | 3.31E+03 | 3.31E+15 |
| K (NH4+/NH3-O) | 6.30E-10 | Cm-244 | 8.10E+01 | 8.10E+13 |
| K (HCO3-/CO3) | 5.60E-11 | Co-60 | 1.13E+03 | 1.13E+15 |
| 10 Max Service Flow, GPM/ft2 (Vendor Data) | | Cs-134 | 1.30E+03 | 1.30E+15 |
| 1.75 Min Service Flow, GPM/ft2 (Vendor Data) | | Cs-137 | 1.00E+02 | 1.00E+14 |
| 24 Minimum IX Run Time, Hours | | C-14 | 4.46E+00 | 4.46E+12 |
| 480000 Total Volume Treated, Gal/Yr | | H-3 | 9.80E+03 | 9.80E+15 |
| Assume Strong Acid Followed by Weak Base | | Mn-54 | 7.70E+03 | 7.70E+15 |
| 4 Pairs of IX Columns in Series | | Pb-210 | 7.85E+01 | 7.85E+13 |
| 800 Hours per year operation time | | Pu-238 | 1.71E+01 | 1.71E+13 |
| 0 Gal/yr treated effluent | | Pu-239/240 | 7.20E-02 | 7.20E+10 |
| | | Radium | 9.80E-01 | 9.80E+11 |
| | | Ru-106 | 6.80E+03 | 6.80E+15 |
| | | Sr-90 | 2.70E+02 | 2.70E+14 |
| | | U-234 | 6.25E-03 | 6.25E+09 |
| | | U-235 | 2.16E-06 | 2.16E+06 |
| | | U-238 | 3.30E-07 | 3.30E+05 |

| Chemical | Valence | Chg | MW | Cations (meq/L) | Anions (meq/L) | Point 3 Concentrations Entering Ion Exchange From Filter (ug/L) | (Mol/L) | (Lbs/Hr) | DF Rmvl Assumed | Point 4 Concentrations Exiting Ion Exchange (ug/L) | (Mol/L) | (Lbs/Hr) | Point 5 IX Column Load (Lbs/Hr) |
|---|---|---|---|---|---|---|---|---|---|---|---|---|---|
| **Inorganics** | | | | | | | | | | | | | |
| Ammonia (Total N) | | | 18 | | | 2.23E+02 | 1.24E-05 | 1.12E-03 | | 2.20E-02 | 1.22E-09 | 1.10E-07 | 1.12E-03 |
| Ammonia | | | 17 | | | 3.00E+00 | 1.70E-07 | 1.50E-05 | | 0.00E+00 | 0.00E+00 | 0.00E+00 | 1.50E-05 |
| Ammonium | 1 | 1 | 18 | 1.22E-02 | 0.00E+00 | 2.20E+02 | 1.22E-05 | 1.10E-03 | 10000 | 2.20E-02 | 1.22E-09 | 1.10E-07 | 1.10E-03 |
| Aluminum | 3 | 1 | 27 | 6.06E-04 | 0.00E+00 | 5.36E+00 | 1.98E-07 | 2.68E-05 | 10000 | 5.36E-04 | 1.98E-11 | 2.68E-09 | 2.68E-05 |
| Antimony | 1 | 1 | 121.75 | 1.05E-04 | 0.00E+00 | 1.27E+01 | 1.05E-07 | 6.37E-05 | 10000 | 1.27E-03 | 1.05E-11 | 6.37E-09 | 6.37E-05 |
| Arsenic | 3 | 1 | 74.9 | 4.73E-04 | 0.00E+00 | 1.18E+01 | 1.58E-07 | 5.91E-05 | 10000 | 1.18E-03 | 1.58E-11 | 5.91E-09 | 5.91E-05 |
| Barium | 2 | 1 | 137.30 | 1.17E-03 | 0.00E+00 | 8.00E+01 | 5.83E-07 | 4.00E-04 | 10000 | 8.00E-03 | 5.83E-11 | 4.00E-08 | 4.00E-04 |
| Boron | 3 | 1 | 10.80 | 2.11E-02 | 0.00E+00 | 7.58E+01 | 7.02E-06 | 3.79E-04 | 10000 | 7.58E-03 | 7.02E-10 | 3.79E-08 | 3.79E-04 |
| Cadmium | 2 | 1 | 112.40 | 4.11E-05 | 0.00E+00 | 2.31E+00 | 2.06E-08 | 1.16E-05 | 10000 | 2.31E-04 | 2.06E-12 | 1.16E-09 | 1.15E-05 |
| Calcium | 2 | 1 | 40.10 | 1.13E+00 | 0.00E+00 | 2.28E+04 | 5.67E-04 | 1.14E-01 | 10000 | 2.28E+00 | 5.67E-08 | 1.14E-05 | 1.14E-01 |
| Chloride | 1 | -1 | 35.50 | 0.00E+00 | -7.32E-02 | 2.60E+03 | 7.32E-05 | 1.30E-02 | 10000 | 2.60E-01 | 7.32E-09 | 1.30E-06 | 1.30E-02 |
| Chromium | 2 | -1 | 52 | 0.00E+00 | -4.52E-05 | 1.18E+00 | 2.26E-08 | 5.88E-06 | 10000 | 1.18E-04 | 2.26E-12 | 5.88E-10 | 5.88E-06 |
| Cobalt | 2 | 1 | 59 | 0.00E+00 | 0.00E+00 | 0.00E+00 | 0.00E+00 | 0.00E+00 | 10000 | 0.00E+00 | 0.00E+00 | 0.00E+00 | 0.00E+00 |
| Copper | 2 | 1 | 63.55 | 4.10E-04 | 0.00E+00 | 1.30E+01 | 2.05E-07 | 6.52E-05 | 10000 | 1.30E-03 | 2.05E-11 | 6.52E-09 | 6.52E-05 |
| Fluoride | 1 | -1 | 28.10 | 0.00E+00 | -7.26E-03 | 2.04E+02 | 7.26E-06 | 1.02E-03 | 10000 | 2.04E-02 | 7.26E-10 | 1.02E-07 | 1.02E-03 |
| Iron | 2 | 1 | 55.80 | 3.71E-04 | 0.00E+00 | 1.03E+01 | 1.86E-07 | 5.18E-05 | 10000 | 1.03E-03 | 1.86E-11 | 5.18E-09 | 5.18E-05 |
| Lead | 2 | 1 | 207.2 | 1.39E-04 | 0.00E+00 | 1.44E+01 | 6.97E-08 | 7.23E-05 | 10000 | 1.44E-03 | 6.97E-12 | 7.23E-09 | 7.22E-05 |
| Magnesium | 2 | 1 | 24.30 | 5.60E-01 | 0.00E+00 | 6.81E+03 | 2.80E-04 | 3.40E-02 | 10000 | 6.81E-01 | 2.80E-08 | 3.40E-06 | 3.40E-02 |
| Manganese | 2 | 1 | 54.90 | 1.06E-03 | 0.00E+00 | 2.86E+01 | 5.20E-07 | 1.45E-04 | 10000 | 2.86E-03 | 5.20E-11 | 1.45E-08 | 1.45E-04 |
| Nickel | 2 | 1 | 58.7 | 2.56E-04 | 0.00E+00 | 7.50E+00 | 1.28E-07 | 3.75E-05 | 10000 | 7.50E-04 | 1.28E-11 | 3.75E-09 | 3.75E-05 |
| Nitrate | 1 | -1 | 62.00 | 0.00E+00 | -7.06E-03 | 4.38E+02 | 7.06E-06 | 2.18E-03 | 10000 | 4.38E-02 | 7.06E-10 | 2.18E-07 | 2.18E-03 |
| Phosphorous | 3 | -1 | 30.97 | 0.00E+00 | -1.94E-03 | 2.00E+01 | 6.46E-07 | 1.00E-04 | 10000 | 2.00E-03 | 6.46E-11 | 1.00E-08 | 1.00E-04 |
| Potassium | 1 | 1 | 39.10 | 7.52E-02 | 0.00E+00 | 2.94E+03 | 7.52E-05 | 1.47E-02 | 10000 | 2.94E-01 | 7.52E-09 | 1.47E-06 | 1.47E-02 |
| Selenium | 2 | 1 | 79 | 1.06E-03 | 0.00E+00 | 4.20E+01 | 5.32E-07 | 2.10E-04 | 10000 | 4.20E-03 | 5.32E-11 | 2.10E-08 | 2.10E-04 |
| Silicon | 2 | -1 | 28.10 | 0.00E+00 | -1.46E-02 | 2.04E+02 | 7.26E-06 | 1.02E-03 | 10000 | 2.04E-02 | 7.26E-10 | 1.02E-07 | 1.02E-03 |
| Silver | 1 | 1 | 107.9 | 3.86E-06 | 0.00E+00 | 4.17E-01 | 3.86E-09 | 2.08E-06 | 10000 | 4.17E-05 | 3.86E-13 | 2.08E-10 | 2.08E-06 |
| Sodium | 1 | 1 | 23.00 | 8.57E-01 | 0.00E+00 | 1.97E+04 | 8.57E-04 | 9.85E-02 | 10000 | 1.97E+00 | 8.57E-08 | 9.85E-06 | 9.85E-02 |
| Strontium | 2 | 1 | 87.60 | 1.81E-03 | 0.00E+00 | 7.94E+01 | 9.06E-07 | 3.97E-04 | 10000 | 7.94E-03 | 9.06E-11 | 3.97E-08 | 3.97E-04 |
| Sulfate | 2 | -1 | 96.00 | 0.00E+00 | -2.52E-01 | 1.21E+04 | 1.26E-04 | 6.05E-02 | 10000 | 1.21E+00 | 1.26E-08 | 6.05E-06 | 6.05E-02 |
| Uranium | 2 | 1 | 238.00 | 2.38E-06 | 0.00E+00 | 2.84E-01 | 1.19E-09 | 1.42E-06 | 10000 | 2.84E-05 | 1.19E-13 | 1.42E-10 | 1.42E-06 |
| Vanadium | 2 | 1 | 50.94 | 2.39E-04 | 0.00E+00 | 6.10E+00 | 1.20E-07 | 3.05E-05 | 10000 | 6.10E-04 | 1.20E-11 | 3.05E-09 | 3.05E-05 |
| Zinc | 2 | 1 | 65.40 | 1.68E-04 | 0.00E+00 | 5.50E+00 | 8.41E-08 | 2.75E-05 | 10000 | 5.50E-04 | 8.41E-12 | 2.75E-09 | 2.75E-05 |
| Total Inorganics | | | | | | 6.86E+04 | 2.04E-03 | 3.43E-01 | | 6.86E+00 | 2.04E-07 | 3.43E-05 | 3.43E-01 |
| Total Cations (meq/L) | | | | | | 2.87E+00 | | | | 2.87E-04 | | | |
| Total Anions (meq/L) | | | | | | -3.54E-01 | | | | -3.54E-05 | | | |
| Charge Balance (%) | | | | | | NA | | | | 99.99% | | | |
| Alkalinity (as CaCO3) | | | | | | 1.17E-01 | | | | 0.00E+00 | | | |
| pH (Dimensionless) | | | | | | 7.36E+00 | | | | 3.46E+00 | | | |
| Carbonate | 2 | -1 | 60 | | -3.56E+05 | 1.70E+02 | 2.80E-06 | 8.80E-04 | | 0.00E+00 | 0.00E+00 | 0.00E+00 | 8.80E-04 |
| Bicarbonate | 1 | -1 | 61 | | -1.41E+08 | 1.41E+05 | 2.31E-03 | 7.04E-01 | | 0.00E+00 | 0.00E+00 | 0.00E+00 | 7.04E-01 |
| TDS | | | | | | 6.84E+04 | | 3.42E-01 | 10000 | 6.84E+00 | | | |
| TSS | | | | | | 3.30E+02 | | 1.65E-03 | 1 | 3.30E+02 | | | |
| Temperature (deg C) | | | | | | 1.86E+01 | | | | 1.86E+01 | | | |
| **Organics** | | | | | | | | | | | | | |
| Acetone | | | | | | 1.33E+01 | | 6.66E-05 | 1 | 1.33E+01 | | 6.66E-05 | 0.00E+00 |
| 1-butanol | | | | | | 3.62E+01 | | 1.81E-04 | 1 | 3.62E+01 | | 1.81E-04 | 0.00E+00 |
| 2-butanone | | | | | | 2.81E+01 | | 1.40E-04 | 1 | 2.81E+01 | | 1.40E-04 | 0.00E+00 |
| BHT | | | | | | 1.35E+01 | | 6.75E-05 | 1 | 1.35E+01 | | 6.75E-05 | 0.00E+00 |
| Hexone (MIBK) | | | | | | 6.87E+00 | | 3.43E-05 | 1 | 6.87E+00 | | 3.43E-05 | 0.00E+00 |
| Toluene | | | | | | 5.30E+00 | | 2.66E-05 | 1 | 5.30E+00 | | 2.66E-05 | 0.00E+00 |
| Trichloromethane | | | | | | 5.10E+00 | | 2.60E-05 | 1 | 5.10E+00 | | 2.60E-05 | 0.00E+00 |
| Methylene Chloride | | | | | | 0.00E+00 | | 0.00E+00 | 1 | 0.00E+00 | | 0.00E+00 | 0.00E+00 |
| Tetrachloroethene | | | | | | 1.00E+00 | | 5.00E-06 | 1 | 1.00E+00 | | 5.00E-06 | 0.00E+00 |
| Total Organic Carbon | | | | | | 8.90E+02 | | 4.40E-03 | 1 | 8.80E+02 | | 4.40E-03 | 0.00E+00 |
| Total Carbon | | | | | | 1.10E+04 | | 5.95E-02 | 1 | 1.10E+04 | | 5.95E-02 | 0.00E+00 |
| Total Organic Halides | | | | | | 2.42E+01 | | 1.21E-04 | 1 | 2.42E+01 | | 1.21E-04 | 0.00E+00 |
| **Radionuclides** | | | | | | (ug/L) | (pCi/L) | (pCi/Hr) | | (ug/L) | (pCi/L) | (pCi/Hr) | (pCi/Hr) |
| Total Alpha | | | | | | | 4.90E+00 | 1.13E+04 | 10000 | | 4.90E-04 | 1.13E+00 | 1.13E+04 |
| Total Beta | | | | | | | 1.66E+06 | 3.75E+09 | 9344 | | 1.77E+02 | 4.01E+05 | 3.75E+09 |
| Am-241 | | | | | | 2.06E-06 | 7.03E+00 | 1.60E+04 | 10000 | 2.06E-10 | 7.03E-04 | 4.06E-07 | 1.60E+04 |
| Cm-242 | | | | | | 1.40E-11 | 4.83E-02 | 1.12E+02 | 10000 | 1.40E-15 | 4.83E-06 | 3.30E-12 | 1.12E+02 |
| Cm-244 | | | | | | 1.10E-09 | 8.92E-02 | 2.03E+02 | 10000 | 1.10E-13 | 8.92E-06 | 2.54E-10 | 2.03E+02 |
| Co-60 | | | | | | 8.37E-07 | 9.46E+02 | 2.15E+06 | 10000 | 8.37E-11 | 9.46E-02 | 1.90E-07 | 2.15E+06 |
| Cs-134 | | | | | | 1.17E-06 | 1.52E+03 | 3.46E+06 | 10000 | 1.17E-10 | 1.52E-01 | 2.65E-07 | 3.46E+06 |
| Cs-137 | | | | | | 2.53E-03 | 4.20E+05 | 9.72E+08 | 10000 | 2.53E-07 | 4.20E+01 | 5.75E-04 | 9.72E+08 |
| C-14 | | | | | | 9.50E-06 | 4.24E+01 | 9.63E+04 | 1 | 9.54E-06 | 4.24E+01 | 2.16E-02 | 9.63E+04 |
| H-3 | | | | | | 5.72E-04 | 5.54E+06 | 1.26E+10 | 1 | 5.72E-04 | 5.54E+06 | 1.30E+00 | 1.26E+10 |
| Mn-54 | | | | | | 2.56E-07 | 2.01E+03 | 4.57E+06 | 10000 | 2.56E-11 | 2.01E-01 | 5.80E-08 | 4.57E+06 |
| Pb-210 | | | | | | 1.44E-07 | 1.10E+01 | 2.50E+04 | 10000 | 1.44E-11 | 1.10E-03 | 3.27E-08 | 2.50E+04 |
| Pu-238 | | | | | | 6.37E-08 | 1.00E+00 | 2.40E+03 | 10000 | 6.37E-12 | 1.00E-04 | 1.45E-08 | 2.40E+03 |
| Pu-239/240 | | | | | | 9.25E-05 | 6.66E+00 | 1.51E+04 | 10000 | 9.25E-09 | 6.66E-04 | 2.10E-05 | 1.51E+04 |
| Radium | | | | | | 3.33E-08 | 3.30E-02 | 7.40E+01 | 10000 | 3.33E-12 | 3.30E-06 | 7.57E-09 | 7.40E+01 |
| Ru-106 | | | | | | 1.51E-06 | 1.01E+04 | 2.30E+07 | 10000 | 1.51E-10 | 1.01E+00 | 3.43E-07 | 2.30E+07 |
| Sr-90 | | | | | | 5.70E-03 | 1.60E+06 | 3.63E+09 | 10000 | 5.70E-07 | 1.60E+02 | 1.31E-03 | 3.63E+09 |
| U-234 | | | | | | 2.56E-05 | 1.60E-01 | 3.63E+02 | 10000 | 2.56E-09 | 1.60E-05 | 5.81E-09 | 3.63E+02 |
| U-235 | | | | | | 1.00E-02 | 2.17E-02 | 4.93E+01 | 10000 | 1.00E-06 | 2.17E-06 | 2.28E-03 | 4.93E+01 |
| U-238 | | | | | | 3.36E-01 | 1.13E-01 | 2.57E+02 | 10000 | 3.36E-05 | 1.13E-05 | 7.64E-02 | 2.57E+02 |

Design Calculations for Ion Exchange System
Alternative B

Influent and Effluent Composition

| | Cations | | Anions | |
|---|---|---|---|---|
| Influent | 2.667675 meq/L | | 0.356156 meq/L | |
| Effluent | 0.000267 meq/L | | 0.000036 meq/L | |
| Removed | 2.667408 meq/L or | 10.09614 meq/Gal | 0.356121 meq/L or | 1.347917 meq/Gal |

Strong Acid Resin Capacity

% Sodium 32.10743 %
% Alkalinity 99.74826 %

Using Culligan Water Company Tables
Capacity 37792.21 meq/ft3

Weak Base Resin Capacity

Using Culligan Water Company Tables
Capacity 27272.73 meq/ft3

Column Sizing Calculations

| | | |
|---|---|---|
| Strong Acid Resin Usage | 0.000534 ft3/gal | (assume a safety factor of 2) |
| | 256.4628 ft3/yr | |
| Weak Base Resin Usage | 0.000099 ft3/gal | (assume a safety factor of 2) |
| | 47.44668 ft3/yr | |
| Strong Acid Column Minimum Size | 7.693883 ft3 | |
| Weak Base Column Minimum Size | 1.4234 ft3 | |
| Chosen SA Size | 13 ft3 | |
| Chosen WB Size | 11 ft3 | |
| Minimum Column Diameter | 1.128378 ft | |
| Maximum Column Diameter | 2.697339 ft | |
| Chosen Size | 1.666667 ft | |

Regeneration Waste

| | |
|---|---|
| Strong Acid Column | 3900 Gal/Regen |
| | 76938.83 Gal/Year |
| Weak Base Column | 550 Gal/Regen |
| | 2372.334 Gal/Year |

Regeneration Time (SA Column) 9.91902 Hrs/Regen

Regeneration Calculations

Chemicals

| | |
|---|---|
| H2SO4 | 2 wt% |
| NaOH | 4 wt% |

Backwash+Rinse 4 Bed Volumes Each Column

| | |
|---|---|
| Volume | 388.96 gal/Column |
| Flowrate | 5 gpm/ft2 |
| Duration | 169.7162 min |

Regeneration

SA Column 12 #H2SO4/ft3

| | |
|---|---|
| Volume | 975 Gal/Column |
| Flowrate | 5 gpm/ft2 |
| Duration | 425.425 min |

WB Column 4 #NaOH/ft3

| | |
|---|---|
| Volume | 137.5 Gal/Column |
| Flowrate | 5 gpm/ft2 |
| Duration | 59.99583 min |

Alternative B

Design Criteria
Granulated Activated Carbon

Influent From Ion Exchange
10 Flow Rate, GPM
K [H+]==>[H+] 0.30E-10
K [HCO3]==>CO3] 5.00E-11

4.5 Max Service Flow, GPM/ft2 (Vendor Data)
0 Min Service Flow, GPM/ft2 (Vendor Data)
300 Minimum GAC Run Time, Hours
400000 Total Volume Treated, Gal/Yr

600 Hours per year operation time
400,000 Gal/yr treated effluent

Design Basis
Specific Activity

| | Solidify | Backwash |
|---|---|---|
| Am-241 | 3.43E+09 | 3.43E+12 |
| Cm-242 | 3.31E+03 | 3.31E+15 |
| Cm-244 | 8.10E+01 | 8.10E+13 |
| Co-60 | 1.13E+03 | 1.13E+15 |
| Cs-134 | 1.20E+03 | 1.20E+15 |
| Cs-137 | 1.00E+02 | 1.00E+14 |
| C-14 | 4.46E+00 | 4.46E+12 |
| H-3 | 9.80E+03 | 9.80E+15 |
| Mn-54 | 7.76E+03 | 7.76E+15 |
| Pb-210 | 7.05E+01 | 7.05E+13 |
| Pu-238 | 1.71E+01 | 1.71E+13 |
| Pu-239/240 | 7.20E-02 | 7.20E+10 |
| Radium | 9.00E-01 | 9.00E+11 |
| Ru-106 | 6.00E+03 | 6.00E+15 |
| Sr-90 | 2.78E+02 | 2.78E+14 |
| U-234 | 6.25E-03 | 6.25E+09 |
| U-235 | 2.16E-00 | 2.16E+06 |
| U-238 | 3.36E-07 | 3.36E+05 |

| Chemical | Valence | Chg | MW | Cations (meq/L) | Anions (meq/L) | Point 4 Concentrations Entering GAC From Ion Exchange (mg/L) | (M/L) | (Lbs/Hr) | DF Removal Assumed | Point 6 Concentrations Exiting From GAC (mg/L) | (M/L) | (Lbs/Hr) | Carbon Load (Lbs/Hr) |
|---|---|---|---|---|---|---|---|---|---|---|---|---|---|
| **Inorganics** | | | | | | | | | | | | | |
| Ammonia (Total N) | | | 18 | | | 2.20E-02 | 1.22E-00 | 1.10E-07 | | 2.20E-02 | 1.22E-00 | 1.10E-07 | 0.00E+00 |
| Ammonia | | | 17 | | | 0.00E+00 | 0.00E+00 | 0.00E+00 | | 0.00E+00 | 0.00E+00 | 0.00E+00 | 0.00E+00 |
| Ammonium | 1 | 1 | 18 | 1.22E-00 | 0.00E+00 | 2.20E-02 | 1.22E-00 | 1.10E-07 | 1 | 2.20E-02 | 1.22E-00 | 1.10E-07 | 0.00E+00 |
| Aluminum | 3 | 1 | 27 | 5.96E-00 | 0.00E+00 | 5.36E-04 | 1.00E-11 | 2.00E-00 | 1 | 5.36E-04 | 1.00E-11 | 2.00E-00 | 0.00E+00 |
| Antimony | 1 | 1 | 121.75 | 1.05E-00 | 0.00E+00 | 1.27E-03 | 1.05E-11 | 6.37E-00 | 1 | 1.27E-03 | 1.05E-11 | 6.37E-00 | 0.00E+00 |
| Arsenic | 3 | 1 | 74.9 | 4.72E-00 | 0.00E+00 | 1.18E-03 | 1.58E-11 | 5.91E-00 | 1 | 1.18E-03 | 1.58E-11 | 5.91E-00 | 0.00E+00 |
| Barium | 2 | 1 | 137.30 | 1.17E-07 | 0.00E+00 | 0.00E-03 | 5.83E-11 | 4.00E-00 | 1 | 0.00E-03 | 5.83E-11 | 4.00E-00 | 0.00E+00 |
| Boron | 3 | 1 | 10.80 | 2.11E-00 | 0.00E+00 | 7.56E-03 | 7.02E-10 | 3.70E-00 | 1 | 7.56E-03 | 7.02E-10 | 3.70E-00 | 0.00E+00 |
| Cadmium | 2 | 1 | 112.40 | 4.11E-00 | 0.00E+00 | 2.31E-04 | 2.06E-12 | 1.15E-00 | 1 | 2.31E-04 | 2.06E-12 | 1.15E-00 | 0.00E+00 |
| Calcium | 2 | 1 | 40.10 | 1.15E-04 | 0.00E+00 | 2.20E+00 | 5.87E-00 | 1.14E-05 | 1 | 2.20E+00 | 5.87E-00 | 1.14E-05 | 0.00E+00 |
| Chloride | 1 | -1 | 35.50 | 0.00E+00 | -7.32E-04 | 2.60E-01 | 7.32E-00 | 1.30E-04 | 1 | [illegible] | 7.32E-00 | 1.30E-04 | 0.00E+00 |
| Chromium | 2 | -1 | 52 | 0.00E+00 | -4.52E-08 | 1.18E-04 | 2.26E-12 | 5.00E-10 | 1 | 1.18E-04 | 2.26E-12 | 5.00E-10 | 0.00E+00 |
| Cobalt | 2 | 1 | 59 | 0.00E+00 | 0.00E+00 | 0.00E+00 | 0.00E+00 | 0.00E+00 | 1 | 0.00E+00 | 0.00E+00 | 0.00E+00 | 0.00E+00 |
| Copper | 2 | 1 | 63.55 | 4.10E-00 | 0.00E+00 | 1.30E-03 | 2.05E-11 | 6.52E-00 | 1 | 1.30E-03 | 2.05E-11 | 6.52E-00 | 0.00E+00 |
| Fluoride | 1 | -1 | 20.10 | 0.00E+00 | -7.20E-07 | 2.04E-02 | 7.20E-10 | 1.02E-07 | 1 | 2.04E-02 | 7.20E-10 | 1.02E-07 | 0.00E+00 |
| Iron | 2 | 1 | 55.80 | 3.71E-00 | 0.00E+00 | 1.03E-03 | 1.85E-11 | 5.10E-00 | 1 | 1.03E-03 | 1.85E-11 | 5.10E-00 | 0.00E+00 |
| Lead | 2 | 1 | 207.2 | 1.30E-00 | 0.00E+00 | 1.44E-03 | 6.97E-12 | 7.23E-00 | 1 | 1.44E-03 | 6.97E-12 | 7.23E-00 | 0.00E+00 |
| Magnesium | 2 | 1 | 24.30 | 5.60E-05 | 0.00E+00 | 6.81E-01 | 2.80E-00 | 3.40E-00 | 1 | 6.81E-01 | 2.80E-00 | 3.40E-00 | 0.00E+00 |
| Manganese | 2 | 1 | 54.90 | 1.00E-07 | 0.00E+00 | 2.80E-03 | 5.20E-11 | 1.40E-00 | 1 | 2.80E-03 | 5.20E-11 | 1.40E-00 | 0.00E+00 |
| Nickel | 2 | 1 | 58.7 | 2.50E-00 | 0.00E+00 | 7.50E-04 | 1.20E-11 | 3.75E-00 | 1 | 7.50E-04 | 1.20E-11 | 3.75E-00 | 0.00E+00 |
| Nitrate | 1 | -1 | 62.00 | 0.00E+00 | -7.00E-07 | 4.20E-02 | 7.00E-10 | 2.10E-07 | 1 | 4.20E-02 | 7.00E-10 | 2.10E-07 | 0.00E+00 |
| Phosphorous | 3 | -1 | 30.97 | 0.00E+00 | -1.04E-07 | 2.00E-03 | 6.46E-11 | 1.00E-00 | 1 | 2.00E-03 | 6.46E-11 | 1.00E-00 | 0.00E+00 |
| Potassium | 1 | 1 | 39.10 | 7.52E-06 | 0.00E+00 | 2.94E-01 | 7.52E-00 | 1.47E-00 | 1 | 2.94E-01 | 7.52E-00 | 1.47E-00 | 0.00E+00 |
| Selenium | 2 | 1 | 79 | 1.00E-07 | 0.00E+00 | 4.20E-03 | 5.32E-11 | 2.10E-00 | 1 | 4.20E-03 | 5.32E-11 | 2.10E-00 | 0.00E+00 |
| Silicon | 2 | -1 | 28.10 | 0.00E+00 | -1.46E-00 | 2.04E-02 | 7.20E-10 | 1.02E-07 | 1 | 2.04E-02 | 7.20E-10 | 1.02E-07 | 0.00E+00 |
| Silver | 1 | 1 | 107.9 | 3.00E-10 | 0.00E+00 | 4.17E-05 | 3.00E-13 | 2.00E-10 | 1 | 4.17E-05 | 3.00E-13 | 2.00E-10 | 0.00E+00 |
| Sodium | 1 | 1 | 23.00 | 8.57E-05 | 0.00E+00 | 1.97E+00 | 8.57E-00 | 9.85E-00 | 1 | 1.97E+00 | 8.57E-00 | 9.85E-00 | 0.00E+00 |
| Strontium | 2 | 1 | 87.60 | 1.01E-07 | 0.00E+00 | 7.94E-03 | 9.06E-11 | 3.97E-00 | 1 | 7.94E-03 | 9.06E-11 | 3.97E-00 | 0.00E+00 |
| Sulfate | 2 | -1 | 96.00 | 0.00E+00 | -2.57E-05 | 1.21E+00 | 1.26E-00 | 6.05E-00 | 1 | 1.21E+00 | 1.26E-00 | 6.05E-00 | 0.00E+00 |
| Uranium | 2 | 1 | 238.00 | 2.30E-10 | 0.00E+00 | 2.84E-05 | 1.19E-13 | 1.42E-10 | 1 | 2.84E-05 | 1.19E-13 | 1.42E-10 | 0.00E+00 |
| Vanadium | 2 | 1 | 50.94 | 2.20E-00 | 0.00E+00 | 6.10E-04 | 1.20E-11 | 3.05E-00 | 1 | 6.10E-04 | 1.20E-11 | 3.05E-00 | 0.00E+00 |
| Zinc | 2 | 1 | 65.40 | 1.00E-00 | 0.00E+00 | 5.50E-04 | 8.41E-12 | 2.75E-00 | 1 | 5.50E-04 | 8.41E-12 | 2.75E-00 | 0.00E+00 |
| Total Inorganics | | | | | | 0.00E+00 | 2.04E-07 | 3.43E-05 | | 0.00E+00 | 2.04E-07 | 3.43E-05 | 0.00E+00 |
| Total Cations (meq/L) | | | | | | 2.97E-04 | | | | 2.97E-04 | | | |
| Total Anions (meq/L) | | | | | | -3.50E-05 | | | | -3.50E-05 | | | |
| Charge Balance (%) | | | | | | NA | | | | 0.00% | | | |
| Alkalinity (as CaCO3) | | | | | | 0.00E+00 | | | 1 | 0.00E+00 | | | |
| pH (Dimensionless) | | | | | | 3.45E+00 | | | | 3.45E+00 | | | |
| Carbonate | 2 | -1 | 60 | | | 0.00E+00 | 0.00E+00 | 0.00E+00 | 1 | 0.00E+00 | 0.00E+00 | 0.00E+00 | 0.00E+00 |
| Bicarbonate | 1 | -1 | 61 | | | 0.00E+00 | 0.00E+00 | 0.00E+00 | 1 | 0.00E+00 | 0.00E+00 | 0.00E+00 | 0.00E+00 |
| TDS | | | | | | 0.04E+00 | | 3.42E-05 | 1 | 0.04E+00 | | 3.42E-05 | 0.00E+00 |
| TSS | | | | | | 3.30E+02 | | 1.05E-03 | 1 | 3.30E+02 | | 1.05E-03 | 0.00E+00 |
| Temperature (deg C) | | | | | | 1.05E+01 | | | | 1.05E+01 | | | |
| **Organics** | | | | | | | | | | | | | |
| Acetone | | | | | | 1.32E+01 | | 0.00E-05 | 1 | 1.32E+01 | | 0.00E-05 | 0.00E+00 |
| 1-butanol | | | | | | 3.82E+01 | | 1.01E-04 | 100 | 3.82E-01 | | 1.01E-00 | 1.79E-04 |
| 2-butanone | | | | | | 2.01E+01 | | 1.40E-04 | 100 | 2.01E-01 | | 1.40E-00 | 1.44E-04 |
| BHT | | | | | | 1.25E+01 | | 6.75E-05 | 100 | 1.25E-01 | | 6.75E-07 | 0.00E-05 |
| Hexane (MEK) | | | | | | 0.07E+00 | | 3.43E-05 | 100 | 0.07E-02 | | 3.43E-07 | 3.40E-05 |
| Toluene | | | | | | 5.20E+00 | | 2.00E-05 | 100 | 5.20E-02 | | 2.00E-07 | 2.05E-05 |
| Trichloromethane | | | | | | 5.10E+00 | | 2.00E-05 | 100 | 5.10E-02 | | 2.00E-07 | 2.57E-05 |
| Methylene Chloride | | | | | | 0.00E+00 | | 0.00E+00 | 100 | 0.00E+00 | | 0.00E+00 | 0.00E+00 |
| Tetrachloroethene | | | | | | 1.00E+00 | | 5.00E-04 | 100 | 1.00E-02 | | 5.00E-00 | 4.05E-04 |
| Total Organic Carbon | | | | | | 0.00E+02 | | 4.40E-03 | 100 | 0.00E+00 | | 4.40E-05 | 4.30E-03 |
| Total Carbon | | | | | | 1.10E+04 | | 5.35E-02 | 100 | 1.10E+02 | | 5.95E-04 | 5.00E-02 |
| Total Organic Halides | | | | | | 2.42E+01 | | 1.21E-04 | 100 | 2.42E-01 | | 1.21E-00 | 1.20E-04 |
| **Radionuclides** | | | | | | Original BAT Rpt Conc. (mg/L) | Basis (pci/L) | (pci/Hr) | | (mg/L) | (pci/L) | (pci/Hr) | (pci/Hr) |
| Total Alpha | | | | | | | 4.00E-04 | 1.13E+00 | 1 | | 4.00E-04 | 1.13E+00 | 0.00E+00 |
| Total Beta | | | | | | | 1.77E+02 | 4.01E+05 | 1 | | 1.77E+02 | 4.01E+05 | 0.00E+00 |
| Am-241 | | | | | | 2.05E-10 | 7.83E-04 | 1.00E+00 | 1 | 2.05E-10 | 7.83E-04 | 1.00E+00 | 0.00E+00 |
| Cm-242 | | | | | | 1.40E-15 | 4.93E-00 | 1.12E-02 | 1 | 1.40E-15 | 4.93E-00 | 1.12E-02 | -0.47E-22 |
| Cm-244 | | | | | | 1.10E-13 | 0.92E-00 | 2.03E-02 | 1 | 1.10E-13 | 0.92E-00 | 2.03E-02 | 0.00E+00 |
| Co-60 | | | | | | 0.37E-11 | 9.40E-02 | 2.15E+02 | 1 | 0.37E-11 | 9.40E-02 | 2.15E+02 | 0.00E+00 |
| Cs-134 | | | | | | 1.17E-10 | 1.52E-01 | 3.46E+02 | 1 | 1.17E-10 | 1.52E-01 | 3.46E+02 | 0.00E+00 |
| Cs-137 | | | | | | 2.53E-07 | 4.20E+01 | 9.72E+04 | 1 | 2.53E-07 | 4.20E+01 | 9.72E+04 | 7.11E-15 |
| C-14 | | | | | | 0.50E-00 | 4.24E+01 | 9.63E+04 | 1 | 0.50E-00 | 4.24E+01 | 9.63E+04 | 0.00E+00 |
| H-3 | | | | | | 5.72E-04 | 5.54E+00 | 1.20E+10 | 1 | 5.72E-04 | 5.54E+00 | 1.20E+10 | 0.00E+00 |
| Mn-54 | | | | | | 2.50E-11 | 2.01E-01 | 4.57E+02 | 1 | 2.50E-11 | 2.01E-01 | 4.57E+02 | 0.00E+00 |
| Pb-210 | | | | | | 1.44E-11 | 1.10E-03 | 2.50E+00 | 1 | 1.44E-11 | 1.10E-03 | 2.50E+00 | -2.17E-10 |
| Pu-238 | | | | | | 0.37E-12 | 1.00E-04 | 2.40E-01 | 1 | 0.37E-12 | 1.00E-04 | 2.40E-01 | 1.30E-20 |
| Pu-239/240 | | | | | | 0.25E-00 | 0.00E-04 | 1.51E+00 | 1 | 0.25E-00 | 0.00E-04 | 1.51E+00 | 1.00E-10 |
| Radium | | | | | | 3.33E-12 | 3.30E-00 | 7.40E-03 | 1 | 3.33E-12 | 3.30E-00 | 7.40E-03 | 4.24E-22 |
| Ru-106 | | | | | | 1.51E-10 | 1.01E+00 | 2.30E+03 | 1 | 1.51E-10 | 1.01E+00 | 2.30E+03 | 2.22E-10 |
| Sr-90 | | | | | | 5.70E-07 | 1.00E+02 | 3.63E+05 | 1 | 5.70E-07 | 1.00E+02 | 3.63E+05 | 0.00E+00 |
| U-234 | | | | | | 2.50E-00 | 1.00E-05 | 3.63E-02 | 1 | 2.50E-00 | 1.00E-05 | 3.63E-02 | 0.00E+00 |
| U-235 | | | | | | 1.00E-00 | 2.17E-00 | 4.93E-03 | 1 | 1.00E-00 | 2.17E-00 | 4.93E-03 | 0.00E+00 |
| U-238 | | | | | | 3.36E-05 | 1.13E-05 | 2.57E-07 | 1 | 3.36E-05 | 1.13E-05 | 2.57E-07 | 0.00E+00 |

| | |
|---|---|
| Design Calculations for GAC System | |
| Alternative B | |
| Carbon Exhaustion Calculated on | 880 ug/L TOC |
| Assumed Capture at Breakthrough | 0.002 ug TOC/ug Carbon |
| Carbon Density | 30 Lb/ft3 |
| Carbon Exhaustion Rate | 0.003664 Lb/Gal H2O Treated |
| | 0.073278 ft3/Hr Operation |
| | 58.62208 ft3/Yr |
| | 1.674917 Beds/Yr |
| | 477.6357 Hrs/Bed |
| Minimum Bed Volume | 26.37994 ft3 |
| Selected Bed Volume | 35 ft3 |
| Minimum Bed Diameter | 1.682086 ft |
| Selected Bed Diameter | 3.75 ft |

Alternative 3

Design Criteria
pH Adjustment
Effluent From Ion Exchange
400,000 Gal/yr treated effluent
10 Flow Rate, GPM
800 Hours per Year Treatment System is in use

4.3E-07 = K [H2CO3=>HCO3] K [H+][OH-] 6.3E-10
K [HCO3=>CO3] 5.6E-11

7 Needed pH
3.452175 Incoming pH

pH Adjustment Calculations

| | | | |
|---|---|---|---|
| Initial HCO3 = | 0.00E+00 m | 0 m [H+][OH-] steady | |
| Initial CO3 = | 0.00E+00 m | 0 m [H+][+] | |
| Initial H2CO3 = | 2.31E-03 m | | |
| x = | -0.94E-03 | Final H2CO3 = | 0.00E+00 m |
| z = | -4.27E-02 | Final HCO3 = | 0.00E+00 |
| y = | 3.26E-02 | Final CO3 = | 4.27E-02 |

Total H+ Required = 3.26E-02 mol/L NaOH 2.36E+03 kg/yr NaOH
1.31E+00 ug/L NaOH

Design Basis
Specific Activity

| | Sa(pCi/g) | Sa(g/g) |
|---|---|---|
| Am-241 | 3.43E+00 | 3.43E+12 |
| Cm-242 | 3.31E+03 | 3.31E+15 |
| Cm-244 | 0.10E+01 | 0.10E+13 |
| Co-60 | 1.13E+03 | 1.13E+15 |
| Cs-134 | 1.30E+03 | 1.30E+15 |
| Cs-137 | 1.60E+02 | 1.60E+14 |
| C-14 | 4.46E+00 | 4.46E+12 |
| H-3 | 9.60E+03 | 9.60E+15 |
| Mn-54 | 7.70E+03 | 7.70E+15 |
| Pb-210 | 7.05E+01 | 7.05E+13 |
| Pu-238 | 1.71E+01 | 1.71E+13 |
| Pu-239/240 | 7.20E+02 | 7.20E+10 |
| Radium | 0.90E-01 | 0.90E+11 |
| Ru-106 | 6.69E+03 | 6.69E+15 |
| Sr-90 | 2.79E+02 | 2.79E+14 |
| U-234 | 0.25E+03 | 0.25E+09 |
| U-235 | 2.16E-04 | 2.16E+04 |
| U-238 | 3.34E-07 | 3.34E+05 |

| Chemical | Valence | Chg | MW | Cations (meq/L) | Anions (meq/L) | Point 4 Concentrations Entering pH Adjustment From GAC (mg/L) | (Mol/L) | (Lbs/Hr) | Point 9 Concentrations Exiting From pH Adjustment (mg/L) | (Mol/L) | (Lbs/Hr) |
|---|---|---|---|---|---|---|---|---|---|---|---|
| **Inorganics** | | | | | | | | | | | |
| Ammonia (Total N) | | | 18 | | | 2.29E-02 | 1.22E-00 | 1.10E-07 | 2.21E-02 | 1.23E-00 | 1.11E-07 |
| Ammonia | | | 17 | | | 0.00E+00 | 0.00E+00 | 0.00E+00 | 2.19E-02 | 1.21E-00 | 1.00E-07 |
| Ammonium | 1 | 1 | 18 | 1.22E-00 | 0.00E+00 | 2.29E-02 | 1.22E-00 | 1.10E-07 | 2.75E-04 | 1.53E-11 | 1.38E-09 |
| Aluminum | 3 | 1 | 27 | 5.06E-00 | 0.00E+00 | 5.35E-04 | 1.98E-11 | 2.68E-09 | 5.35E-04 | 1.98E-11 | 2.68E-09 |
| Antimony | 1 | 1 | 121.75 | 1.06E-00 | 0.00E+00 | 1.27E-03 | 1.05E-11 | 6.37E-09 | 1.27E-03 | 1.05E-11 | 6.37E-09 |
| Arsenic | 3 | 1 | 74.9 | 4.73E-00 | 0.00E+00 | 1.18E-03 | 1.58E-11 | 5.91E-09 | 1.18E-03 | 1.58E-11 | 5.91E-09 |
| Barium | 2 | 1 | 137.30 | 1.17E-07 | 0.00E+00 | 0.00E-03 | 5.83E-11 | 4.00E-09 | 0.00E-03 | 5.83E-11 | 4.00E-09 |
| Boron | 3 | 1 | 10.80 | 2.11E-00 | 0.00E+00 | 7.56E-03 | 7.02E-10 | 3.78E-08 | 7.56E-03 | 7.02E-10 | 3.78E-08 |
| Cadmium | 2 | 1 | 112.40 | 4.11E-00 | 0.00E+00 | 2.31E-04 | 2.06E-12 | 1.15E-09 | 2.31E-04 | 2.06E-12 | 1.15E-09 |
| Calcium | 2 | 1 | 40.10 | 1.13E-04 | 0.00E+00 | 2.29E+00 | 5.67E-08 | 1.14E-05 | 2.29E+00 | 5.67E-08 | 1.14E-05 |
| Chloride | 1 | -1 | 35.50 | 0.00E+00 | -7.32E-08 | 2.60E-01 | 7.32E-08 | 1.30E-05 | 2.60E-01 | 7.32E-08 | 1.30E-05 |
| Chromium | 2 | -1 | 52 | 0.00E+00 | -4.52E-08 | 1.18E-04 | 2.26E-12 | 5.88E-10 | 1.18E-04 | 2.26E-12 | 5.88E-10 |
| Cobalt | 2 | 1 | 59 | 0.00E+00 | 0.00E+00 | 0.00E+00 | 0.00E+00 | 0.00E+00 | 0.00E+00 | 0.00E+00 | 0.00E+00 |
| Copper | 2 | 1 | 63.55 | 4.10E-08 | 0.00E+00 | 1.30E-03 | 2.06E-11 | 6.52E-09 | 1.30E-03 | 2.06E-11 | 6.52E-09 |
| Fluoride | 1 | -1 | 29.10 | 0.00E+00 | -7.26E-07 | 2.04E-02 | 7.26E-10 | 1.02E-07 | 2.04E-02 | 7.26E-10 | 1.02E-07 |
| Iron | 2 | 1 | 55.80 | 3.71E-08 | 0.00E+00 | 1.03E-03 | 1.85E-11 | 5.16E-09 | 1.03E-03 | 1.85E-11 | 5.16E-09 |
| Lead | 2 | 1 | 207.2 | 1.30E-08 | 0.00E+00 | 1.44E-03 | 6.97E-12 | 7.23E-09 | 1.44E-03 | 6.97E-12 | 7.23E-09 |
| Magnesium | 2 | 1 | 24.30 | 5.00E-06 | 0.00E+00 | 0.81E-01 | 2.00E-08 | 3.40E-06 | 0.81E-01 | 2.00E-08 | 3.40E-06 |
| Manganese | 2 | 1 | 54.90 | 1.06E-07 | 0.00E+00 | 2.90E-03 | 5.29E-11 | 1.46E-08 | 2.90E-03 | 5.29E-11 | 1.46E-08 |
| Nickel | 2 | 1 | 58.7 | 2.56E-08 | 0.00E+00 | 7.56E-04 | 1.29E-11 | 3.75E-09 | 7.56E-04 | 1.29E-11 | 3.75E-09 |
| Nitrate | 1 | -1 | 62.00 | 0.00E+00 | -7.00E-07 | 4.30E-02 | 7.00E-10 | 2.16E-07 | 4.30E-02 | 7.00E-10 | 2.16E-07 |
| Phosphorous | 3 | -1 | 30.97 | 0.00E+00 | -1.94E-07 | 2.00E-03 | 6.46E-11 | 1.00E-08 | 2.00E-03 | 6.46E-11 | 1.00E-08 |
| Potassium | 1 | 1 | 39.10 | 7.52E-08 | 0.00E+00 | 2.94E-01 | 7.52E-08 | 1.47E-08 | 2.94E-01 | 7.52E-08 | 1.47E-08 |
| Selenium | 2 | 1 | 79 | 1.06E-07 | 0.00E+00 | 4.20E-03 | 5.32E-11 | 2.10E-08 | 4.20E-03 | 5.32E-11 | 2.10E-08 |
| Silicon | 2 | -1 | 28.10 | 0.00E+00 | -1.46E-08 | 2.94E-02 | 7.26E-10 | 1.02E-07 | 2.94E-02 | 7.26E-10 | 1.02E-07 |
| Silver | 1 | 1 | 107.9 | 3.00E-10 | 0.00E+00 | 4.17E-06 | 3.86E-13 | 2.08E-10 | 4.17E-05 | 3.86E-12 | 2.08E-10 |
| Sodium | 1 | 1 | 23.00 | 8.57E-05 | 0.00E+00 | 1.97E+00 | 8.57E-08 | 9.85E-06 | 7.54E+05 | 3.28E-02 | 3.77E+00 |
| Strontium | 2 | 1 | 87.60 | 1.01E-07 | 0.00E+00 | 7.94E-03 | 9.06E-11 | 3.97E-08 | 7.94E-03 | 9.06E-11 | 3.97E-08 |
| Sulfate | 2 | -1 | 96.06 | 0.00E+00 | -2.53E-05 | 1.21E+00 | 1.26E-08 | 6.05E-06 | 1.21E+00 | 1.26E-08 | 6.05E-06 |
| Uranium | 2 | 1 | 238.00 | 2.39E-10 | 0.00E+00 | 2.84E-05 | 1.19E-13 | 1.42E-10 | 2.84E-05 | 1.19E-13 | 1.42E-10 |
| Vanadium | 2 | 1 | 50.94 | 2.36E-08 | 0.00E+00 | 6.10E-04 | 1.20E-11 | 3.05E-09 | 6.10E-04 | 1.20E-11 | 3.05E-09 |
| Zinc | 2 | 1 | 65.40 | 1.00E-08 | 0.00E+00 | 5.50E-04 | 8.41E-12 | 2.75E-09 | 5.50E-04 | 8.41E-12 | 2.75E-09 |
| Total Inorganics | | | | | | 0.00E+00 | 2.04E-07 | 3.43E-05 | 7.54E+05 | 3.28E-02 | 3.77E+00 |
| Total Cations (meq/L) | | | | | | 2.07E-04 | | | 3.28E+01 | | |
| Total Anions (meq/L) | | | | | | -3.54E-05 | | | -3.54E-05 | | |
| Charge Balance (%) | | | | | | 0.00E+00 | | | | | |
| Alkalinity (as CaCO3) | | | | | | 0.00E+00 | | | 4.31E+00 | | |
| pH (Dimensionless) | | | | | | 3.45E+00 | | | 7.00E+00 | | |
| Carbonate | 2 | -1 | 60 | | | 0.00E+00 | 0.00E+00 | 0.00E+00 | 2.56E+00 | 4.27E-02 | 1.20E+01 |
| Bicarbonate | 1 | -1 | 61 | | | 0.00E+00 | 0.00E+00 | 0.00E+00 | 0.00E+00 | 0.00E+00 | 0.00E+00 |
| TDS | | | | | | 0.04E+00 | | 3.42E-05 | 0.04E+00 | | 3.42E-05 |
| TSS | | | | | | 3.20E+02 | | 1.06E-03 | 3.30E+02 | | 1.06E-03 |
| Temperature (deg C) | | | | | | 1.05E+01 | | | 1.05E+01 | | |
| **Organics** | | | | | | | | | | | |
| Acetone | | | | | | 1.33E+01 | | 0.00E-05 | 1.33E+01 | | 0.00E-05 |
| 1-Butanol | | | | | | 3.62E-01 | | 1.01E-06 | 3.62E-01 | | 1.01E-06 |
| 2-Butanone | | | | | | 2.91E-01 | | 1.40E-06 | 2.91E-01 | | 1.40E-06 |
| BHT | | | | | | 1.35E-01 | | 6.75E-07 | 1.35E-01 | | 6.75E-07 |
| Hexone (MIBK) | | | | | | 6.87E-02 | | 3.43E-07 | 6.87E-02 | | 3.43E-07 |
| Toluene | | | | | | 5.30E-02 | | 2.00E-07 | 5.30E-02 | | 2.00E-07 |
| Trichloromethane | | | | | | 5.10E-02 | | 2.00E-07 | 5.10E-02 | | 2.00E-07 |
| Methylene Chloride | | | | | | 0.00E+00 | | 0.00E+00 | 0.00E+00 | | 0.00E+00 |
| Tetrachloroethene | | | | | | 1.00E-02 | | 5.00E-08 | 1.00E-02 | | 5.00E-08 |
| Total Organic Carbon | | | | | | 0.00E+00 | | 4.40E-05 | 0.00E+00 | | 4.40E-05 |
| Total Carbon | | | | | | 1.10E+02 | | 5.96E-04 | 1.10E+02 | | 5.96E-04 |
| Total Organic Halides | | | | | | 2.42E-01 | | 1.21E-06 | 2.42E-01 | | 1.21E-06 |
| **Radionuclides** | | | | | | (pCi/L) | (pCi/L) | (pCi/Hr) | (pCi/L) | (pCi/L) | (pCi/Hr) |
| Total Alpha | | | | | | | 4.90E-04 | 1.13E+00 | | 4.90E-04 | 1.13E+00 |
| Total Beta | | | | | | | 1.77E+02 | 4.01E+05 | | 1.77E+02 | 4.01E+05 |
| Am-241 | | | | | | 2.05E-10 | 7.83E-04 | 1.00E+00 | 2.05E-10 | 7.83E-04 | 1.00E+00 |
| Cm-242 | | | | | | 1.40E-15 | 4.83E-08 | 1.12E-02 | 1.40E-15 | 4.83E-08 | 1.12E-02 |
| Cm-244 | | | | | | 1.10E-13 | 8.02E-08 | 2.63E-02 | 1.10E-13 | 8.02E-08 | 2.63E-02 |
| Co-60 | | | | | | 0.37E-11 | 9.46E-02 | 2.15E+02 | 0.37E-11 | 9.46E-02 | 2.15E+02 |
| Cs-134 | | | | | | 1.17E-10 | 1.52E-01 | 3.46E+02 | 1.17E-10 | 1.52E-01 | 3.46E+02 |
| Cs-137 | | | | | | 2.53E-07 | 4.20E+01 | 9.72E+04 | 2.53E-07 | 4.20E+01 | 9.72E+04 |
| C-14 | | | | | | 9.50E-08 | 4.24E+01 | 9.63E+04 | 9.50E-08 | 4.24E+01 | 9.63E+04 |
| H-3 | | | | | | 5.72E-04 | 5.54E+06 | 1.20E+10 | 5.72E-04 | 5.54E+06 | 1.20E+10 |
| Mn-54 | | | | | | 2.56E-11 | 2.01E-01 | 4.57E+02 | 2.56E-11 | 2.01E-01 | 4.57E+02 |
| Pb-210 | | | | | | 1.44E-11 | 1.10E-03 | 2.50E+00 | 1.44E-11 | 1.10E-03 | 2.50E+00 |
| Pu-238 | | | | | | 0.37E-12 | 1.00E-04 | 2.40E-01 | 0.37E-12 | 1.00E-04 | 2.40E-01 |
| Pu-239/240 | | | | | | 9.25E-08 | 0.00E-04 | 1.51E+00 | 9.25E-08 | 0.00E-04 | 1.51E+00 |
| Radium | | | | | | 3.33E-12 | 3.30E-08 | 7.49E-03 | 3.33E-12 | 3.30E-08 | 7.49E-03 |
| Ru-106 | | | | | | 1.51E-10 | 1.01E+00 | 2.30E+03 | 1.51E-10 | 1.01E+00 | 2.30E+03 |
| Sr-90 | | | | | | 5.70E-07 | 1.00E+02 | 3.63E+05 | 5.70E-07 | 1.00E+02 | 3.63E+05 |
| U-234 | | | | | | 2.56E-09 | 1.00E-05 | 3.63E-02 | 2.56E-09 | 1.00E-05 | 3.63E-02 |
| U-235 | | | | | | 1.00E-08 | 2.17E-06 | 4.93E-03 | 1.00E-08 | 2.17E-06 | 4.93E-03 |
| U-238 | | | | | | 3.34E-05 | 1.13E-05 | 2.57E-02 | 3.34E-05 | 1.13E-05 | 2.57E-02 |

Alternative B

Design Criteria
6.00E+01 mg/L of Hardness

| Chemical | Final Effluent Concentrations (ug/L) | Columbia River Concentrations (ug/L) | Effluent Limits Chronic (ug/L) | Effluent Limits Acute (ug/L) | Overall (DF) | Toxic Pounds Removed Factor | Toxic Pounds Removed (Lbs/yr) |
|---|---|---|---|---|---|---|---|
| **Inorganics** | | | | | | | |
| Ammonia (Total N) | 2.21E-02 | 6.00E+01 | 2.00E+03 | 1.85E+04 | 1.01E+04 | 4.48E-03 | 4.00E-03 |
| Ammonia | 2.18E-02 | | | | 1.37E+02 | | |
| Ammonium | 2.75E-04 | | | | 7.99E+05 | | |
| Aluminum | 5.38E-04 | | 5.00E+01 | | 7.10E+04 | 1.53E-01 | 2.32E-02 |
| Antimony | 1.27E-03 | | 1.60E+03 | 9.00E+03 | 1.10E+04 | 5.99E-03 | 3.38E-04 |
| Arsenic | 1.18E-03 | 1.20E+00 | 1.90E+02 | 3.60E+02 | 1.10E+04 | 7.06E-02 | 3.67E-03 |
| Barium | 8.00E-03 | 2.65E+01 | 1.00E+03 | | 1.30E+04 | 7.64E-03 | 3.18E-03 |
| Boron | 7.58E-03 | | | | 1.10E+04 | | 0.00E+00 |
| Cadmium | 2.31E-04 | | 7.59E-01 | 2.20E+00 | 1.30E+04 | 1.50E+01 | 1.60E-01 |
| Calcium | 2.28E+00 | 1.84E+04 | | | 1.00E+04 | | 0.00E+00 |
| Chloride | 2.60E-01 | 1.98E+03 | 2.50E+05 | | 1.00E+04 | 3.08E-05 | 3.18E-04 |
| Chromium | 1.18E-04 | | 1.10E+01 | 1.60E+01 | 5.10E+04 | 1.38E+00 | 3.31E-02 |
| Cobalt | 0.00E+00 | | | | | | 0.00E+00 |
| Copper | 1.30E-03 | | 7.64E+00 | 1.10E+01 | 2.30E+04 | 2.00E+00 | 2.39E-01 |
| Fluoride | 2.04E-02 | 1.00E+02 | 4.00E+03 | | 1.00E+04 | 1.91E-03 | 1.58E-03 |
| Iron | 1.03E-03 | 5.07E+01 | 1.00E+03 | | 1.73E+05 | 7.64E-03 | 5.47E-03 |
| Lead | 1.44E-03 | | 1.86E+00 | 4.26E+01 | 2.70E+04 | 4.86E+00 | 7.58E-01 |
| Magnesium | 6.81E-01 | 3.65E+03 | | | 1.00E+04 | | 0.00E+00 |
| Manganese | 2.90E-03 | 6.78E+00 | 5.00E+01 | | 3.00E+04 | 1.53E-01 | 5.31E-02 |
| Nickel | 7.50E-04 | 8.00E+00 | 1.02E+02 | 9.21E+02 | 1.20E+04 | 8.66E-02 | 3.11E-03 |
| Nitrate | 4.38E-02 | | 1.00E+04 | | 1.00E+04 | 7.64E-04 | 1.34E-03 |
| Phosphorous | 2.00E-03 | 2.00E+01 | | | 1.00E+04 | | 0.00E+00 |
| Potassium | 2.94E-01 | 6.41E+02 | | | 1.20E+04 | | 0.00E+00 |
| Selenium | 4.20E-03 | | 3.50E+01 | 2.60E+02 | 1.00E+04 | 2.60E-01 | 4.37E-02 |
| Silicon | 2.04E-02 | 1.84E+03 | | | 1.00E+05 | | 0.00E+00 |
| Silver | 4.17E-05 | | 1.20E-01 | 1.69E+00 | 1.20E+04 | 7.02E+01 | 1.40E-01 |
| Sodium | 7.54E+05 | 1.63E+03 | | | 2.61E-02 | | 0.00E+00 |
| Strontium | 7.94E-03 | 8.30E+01 | | | 1.10E+04 | | 0.00E+00 |
| Sulfate | 1.21E+00 | 9.76E+03 | 2.50E+05 | | 1.00E+04 | 3.08E-05 | 1.48E-03 |
| Uranium | 2.64E-05 | 8.08E-01 | | | 1.00E+05 | | 0.00E+00 |
| Vanadium | 6.10E-04 | | | | 1.00E+04 | | 0.00E+00 |
| Zinc | 5.50E-04 | 5.75E+00 | 6.88E+01 | 7.59E+01 | 2.20E+04 | 2.55E-01 | 1.24E-02 |
| Total Inorganics | 7.54E+05 | | | | 9.47E-02 | | |
| Total Cations (meq/L) | 3.28E+01 | | | | 8.23E-02 | | |
| Total Anions (meq/L) | -3.56E-05 | | | | 1.37E+04 | | |
| Charge Balance (%) | | | | | | | |
| Alkalinity (as CaCO3) | 4.31E+00 | 5.40E+04 | | | | | |
| pH (Dimensionless) | 7.00E+00 | 8.30E+00 | | | | | |
| Carbonate | 2.58E+06 | 8.00E+02 | | | | | |
| Bicarbonate | 0.00E+00 | 6.44E+04 | | | | | |
| TDS | 6.84E+00 | 6.94E+04 | | | 1.00E+04 | | |
| TSS | 3.30E+02 | 3.00E+03 | | | 9.10E+00 | | |
| Temperature (deg C) | | 1.68E+01 | | | | | |
| **Organics** | | | | | | | |
| Acetone | 1.33E+01 | | | | 1.30E+00 | | 0.00E+00 |
| 1-butanol | 3.62E-01 | | | | 1.00E+02 | | 0.00E+00 |
| 2-butanone | 2.91E-01 | | | | 1.00E+02 | | 0.00E+00 |
| BHT | 1.35E-01 | | | | 1.00E+02 | | 0.00E+00 |
| Hexone (MIBK) | 6.87E-02 | | | | 1.60E+02 | | 0.00E+00 |
| Toluene | 5.38E-02 | | 1.43E+04 | 1.75E+04 | 1.00E+02 | 1.16E-03 | 2.46E-05 |
| Trichloromethane | 5.19E-02 | | 1.24E+03 | 2.89E+04 | 1.00E+02 | 6.54E-03 | 1.34E-04 |
| Methylene Chloride | 0.00E+00 | | 5.00E+00 | | | 1.53E+00 | 0.00E+00 |
| Tetrachloroethene | 1.00E-02 | | 8.40E+02 | 5.28E+03 | 1.00E+02 | 1.12E-02 | 4.42E-05 |
| Total Organic Carbon | 8.80E+00 | 1.66E+03 | | | 1.00E+02 | | |
| Total Carbon | 1.19E+02 | 1.46E+04 | | | 1.00E+02 | | |
| Total Organic Halides | 2.42E-01 | 1.08E+02 | | | 1.00E+02 | | |
| **Radionuclides** | (pci/L) | (pci/L) | (pci/L) | | | | |
| Total Alpha | 4.99E-04 | 7.60E-01 | 3.00E-01 | | 1.00E+05 | | |
| Total Beta | 1.77E+02 | 9.60E-01 | 3.00E+01 | | 9.34E+03 | | |
| Am-241 | 7.03E-04 | | 3.00E+01 | | 1.00E+05 | 6.40E+05 | 5.25E-02 |
| Cm-242 | 4.93E-06 | | 1.00E+03 | | 1.00E+05 | 1.65E+07 | 1.10E-05 |
| Cm-244 | 8.92E-06 | | 6.00E+01 | | 1.00E+05 | 7.56E+06 | 3.33E-04 |
| Co-60 | 9.46E-02 | | 1.00E+04 | | 7.40E+04 | 6.33E+05 | 1.57E-02 |
| Cs-134 | 1.52E-01 | | 2.00E+03 | | 1.10E+04 | 3.84E+06 | 1.87E-02 |
| Cs-137 | 4.28E+01 | | 3.00E+03 | | 1.10E+04 | 3.15E+05 | 3.51E+00 |
| C-14 | 4.24E+01 | | 7.00E+04 | | 1.00E+00 | 3.57E+02 | 0.00E+00 |
| H-3 | 5.54E+06 | 3.74E+02 | 2.00E+06 | | 1.00E+00 | 2.71E+04 | 0.00E+00 |
| Mn-54 | 2.01E-01 | | 5.00E+04 | | 3.00E+04 | 8.69E+06 | 2.70E-03 |
| Pb-210 | 1.10E-03 | | 3.00E+01 | | 2.70E+04 | 1.43E+07 | 2.22E-02 |
| Pu-238 | 1.09E-04 | 1.32E-01 | 4.00E+01 | | 1.00E+05 | 2.40E+06 | 6.10E-03 |
| Pu-239/240 | 6.66E-04 | 7.00E-02 | 3.00E+01 | | 1.00E+05 | 1.34E+04 | 4.97E-02 |
| Radium | 3.30E-06 | 1.42E-01 | 1.00E+02 | | 1.00E+05 | 5.54E+04 | 7.39E-05 |
| Ru-106 | 1.01E+00 | | 6.00E+03 | | 1.70E+04 | 6.24E+06 | 6.42E-02 |
| Sr-90 | 1.60E+02 | 3.84E-01 | 1.00E+03 | | 1.10E+04 | 1.56E+06 | 3.94E+01 |
| U-234 | 1.60E-05 | | 5.00E+02 | | 1.00E+05 | 7.00E+01 | 7.18E-05 |
| U-235 | 2.17E-05 | | 6.00E+02 | | 1.00E+05 | 2.02E-02 | 6.10E-06 |
| U-238 | 1.13E-05 | | 6.00E+02 | | 1.00E+05 | 3.14E-03 | 4.22E-05 |
| | | | | | Total Toxic Pounds Removed per Year | | 43.15045 |

This page intentionally left blank.

# APPENDIX C

## ALTERNATIVE C
## TREATMENT EQUIPMENT SIZING AND SECONDARY WASTE CALCULATIONS

This page intentionally left blank.

# ALTERNATIVE C
# TREATMENT EQUIPMENT SIZING, AND
# SECONDARY WASTE CALCULATIONS

Appendix C consists of spreadsheets and tables that represent waste stream treatment calculations, treatment system equipment sizing calculations, and calculations of the secondary waste streams generated for Alternative C. Each spreadsheet typically presents one of these calculations for each specific unit or process in the treatment train.

The first table presented for each unit or process shows how the concentration of each contaminant is affected by the specific treatment unit or process. The concentrations in the stream exiting each treatment unit or process are calculated by dividing the contaminant concentrations entering the treatment unit/process by the decontamination factor (DF) noted on each table. Based on the concentrations and flow rates, the mass of the contaminant entering and exiting the unit or process is also presented. The mass of secondary wastes are noted by the difference between the influents and effluent masses.

Spreadsheet calculations related to secondary wastes are attached following the treatment calculation spreadsheet for each specific treatment unit or process.

Spreadsheets showing sizing and general design calculations are presented for IX or GAC treatment units.

Assumptions for specific calculations are generally noted on each corresponding spreadsheet.

Alternative C

Design Criteria
Filtration
Influent From Equalization Tank

10 Flow Rate,GPM
K [H2O<==>H+OH-] 6.3E-10
K [HCO3<==>CO3] 5.6E-11
3 ppm Body Feed
800 Hours of Operation per Year
480,000 Gal/yr treated effluent
6 pounds of precoat per backflush

Design Basis
Specific Activity

| | Sa(ci/g) | Sa(pci/g) |
|---|---|---|
| Am-241 | 3.43E+00 | 3.43E+12 |
| Cm-242 | 3.31E+03 | 3.31E+15 |
| Cm-244 | 8.10E+01 | 8.10E+13 |
| Co-60 | 1.13E+03 | 1.13E+15 |
| Cs-134 | 1.30E+03 | 1.30E+15 |
| Cs-137 | 1.00E+02 | 1.00E+14 |
| C-14 | 4.40E+00 | 4.40E+12 |
| H-3 | 9.60E+03 | 9.60E+15 |
| Mn-54 | 7.70E+03 | 7.70E+15 |
| Pb-210 | 7.85E+01 | 7.85E+13 |
| Pu-238 | 1.71E+01 | 1.71E+13 |
| Pu-239/240 | 7.20E-02 | 7.20E+10 |
| Radium | 9.90E-01 | 9.90E+11 |
| Ru-106 | 6.60E+03 | 6.60E+15 |
| Sr-90 | 2.70E+02 | 2.70E+14 |
| U-234 | 6.25E-03 | 6.25E+09 |
| U-235 | 2.10E-06 | 2.10E+06 |
| U-238 | 3.30E-07 | 3.30E+06 |

| Chemical | Valence | Charge | | MW | Cations (meq/L) | Anions (meq/L) | Concentrations (Pt. 1) Before DE Addition (ug/L) | (M/L) | (lbs/hr) | Concentrations (Pt. 2) Entering Filtration (ug/L) | (M/L) | (lbs/hr) | (DF) | Concentrations Exiting Filtration Unit (Pt 3) (ug/L) | (M/L) | (lbs/hr) | Bottom (Pt. 4)) (lbs/hr) |
|---|---|---|---|---|---|---|---|---|---|---|---|---|---|---|---|---|---|
| Inorganics | | | | | | | | | | | | | | | | | |
| Ammonia (Total N) | | | | 18 | | | 2.23E+02 | 1.24E-05 | 1.11E-03 | 2.23E+02 | 1.24E-05 | 1.11E-03 | 1 | 2.23E+02 | 1.24E-05 | 1.11E-03 | 0.00E+00 |
| Ammonia | | | | 17 | | | 3.00E+00 | 1.5873E-08 | 1.50E-05 | 3.00E+00 | 1.50E-08 | 1.50E-05 | 1 | 3.00E+00 | 1.50E-08 | 1.50E-05 | 0.00E+00 |
| Ammonium | 1 | 1 | | 18 | 1.22E-02 | 0.00E+00 | 2.20E+02 | 1.24E-05 | 1.10E-03 | 2.20E+02 | 1.24E-05 | 1.10E-03 | 1 | 2.20E+02 | 1.24E-05 | 1.10E-03 | 0.00E+00 |
| Aluminum | 3 | 1 | | 27 | 4.22E-03 | 0.00E+00 | 3.80E+01 | 1.41E-06 | 1.90E-04 | 3.80E+01 | 1.41E-06 | 1.90E-04 | 7.1 | 5.35E+00 | 1.98E-07 | 2.67E-05 | 1.63E-04 |
| Antimony | 1 | 1 | | 121.75 | 1.15E-04 | 0.00E+00 | 1.40E+01 | 1.15E-07 | 6.99E-05 | 1.40E+01 | 1.15E-07 | 6.99E-06 | 1.1 | 1.27E+01 | 1.06E-07 | 6.36E-05 | 6.36E-06 |
| Arsenic | 3 | 1 | | 74.9 | 5.21E-04 | 0.00E+00 | 1.30E+01 | 1.74E-07 | 6.50E-05 | 1.30E+01 | 1.74E-07 | 6.50E-05 | 1.1 | 1.10E+01 | 1.50E-07 | 5.00E-05 | 5.00E-06 |
| Barium | 2 | 1 | | 137.30 | 1.51E-03 | 0.00E+00 | 1.04E+02 | 7.57E-07 | 5.20E-04 | 1.04E+02 | 7.57E-07 | 5.20E-04 | 1.3 | 8.00E+01 | 5.83E-07 | 4.00E-04 | 1.30E-04 |
| Boron | 3 | 1 | | 10.80 | 2.32E-02 | 0.00E+00 | 8.34E+01 | 7.72E-06 | 4.17E-04 | 8.34E+01 | 7.72E-06 | 4.17E-04 | 1.1 | 7.58E+01 | 7.02E-06 | 3.79E-04 | 3.79E-05 |
| Cadmium | 2 | 1 | | 112.40 | 5.34E-05 | 0.00E+00 | 3.00E+00 | 2.67E-08 | 1.50E-05 | 3.00E+00 | 2.67E-08 | 1.50E-05 | 1.3 | 2.31E+00 | 2.05E-08 | 1.15E-05 | 3.46E-06 |
| Calcium | 2 | 1 | | 40.10 | 1.13E+00 | 0.00E+00 | 2.28E+04 | 5.67E-04 | 1.14E-01 | 2.28E+04 | 5.67E-04 | 1.14E-01 | 1 | 2.28E+04 | 5.67E-04 | 1.14E-01 | 0.00E+00 |
| Chloride | 1 | | -1 | 35.50 | 0.00E+00 | -7.32E-02 | 2.60E+03 | 7.32E-05 | 1.30E-02 | 2.60E+03 | 7.32E-05 | 1.30E-02 | 1 | 2.60E+03 | 7.32E-05 | 1.30E-02 | 0.00E+00 |
| Chromium | 2 | | -1 | 52 | 0.00E+00 | -2.31E-04 | 6.00E+00 | 1.15E-07 | 3.00E-05 | 6.00E+00 | 1.15E-07 | 3.00E-05 | 5.1 | 1.18E+00 | 2.26E-08 | 5.88E-06 | 2.41E-05 |
| Cobalt | 2 | 1 | | 59 | 0.00E+00 | 0.00E+00 | 0.00E+00 | 0.00E+00 | 0.00E+00 | 0.00E+00 | 0.00E+00 | 0.00E+00 | 1 | 0.00E+00 | 0.00E+00 | 0.00E+00 | 0.00E+00 |
| Copper | 2 | 1 | | 63.55 | 9.44E-04 | 0.00E+00 | 3.00E+01 | 4.72E-07 | 1.50E-04 | 3.00E+01 | 4.72E-07 | 1.50E-04 | 2.3 | 1.30E+01 | 2.05E-07 | 6.52E-05 | 8.47E-05 |
| Fluoride | 1 | | -1 | 19.10 | 0.00E+00 | -7.20E-03 | 2.04E+02 | 7.20E-06 | 1.02E-03 | 2.04E+02 | 7.20E-06 | 1.02E-03 | 1 | 2.04E+02 | 7.20E-06 | 1.02E-03 | 0.00E+00 |
| Iron | 2 | 1 | | 55.80 | 6.42E-03 | 0.00E+00 | 1.79E+02 | 3.21E-06 | 8.94E-04 | 1.79E+02 | 3.21E-06 | 8.94E-04 | 17.3 | 1.03E+01 | 1.85E-07 | 5.17E-05 | 8.43E-04 |
| Lead | 2 | 1 | | 207.2 | 3.76E-04 | 0.00E+00 | 3.90E+01 | 1.90E-07 | 1.95E-04 | 3.90E+01 | 1.90E-07 | 1.95E-04 | 2.7 | 1.44E+01 | 6.97E-08 | 7.22E-05 | 1.23E-04 |
| Magnesium | 2 | 1 | | 24.30 | 5.60E-01 | 0.00E+00 | 6.81E+03 | 2.80E-04 | 3.40E-02 | 6.81E+03 | 2.80E-04 | 3.40E-02 | 1 | 6.81E+03 | 2.80E-04 | 3.40E-02 | 0.00E+00 |
| Manganese | 2 | 1 | | 54.90 | 3.17E-03 | 0.00E+00 | 8.68E+01 | 1.58E-06 | 4.34E-04 | 8.68E+01 | 1.58E-06 | 4.34E-04 | 3 | 2.90E+01 | 5.28E-07 | 1.45E-04 | 2.89E-04 |
| Nickel | 2 | 1 | | 58.7 | 3.07E-04 | 0.00E+00 | 9.00E+00 | 1.53E-07 | 4.50E-05 | 9.00E+00 | 1.53E-07 | 4.50E-05 | 1.2 | 7.50E+00 | 1.28E-07 | 3.75E-05 | 7.40E-06 |
| Nitrate | 1 | | -1 | 62.00 | 0.00E+00 | -7.06E-03 | 4.38E+02 | 7.06E-06 | 2.19E-03 | 4.38E+02 | 7.06E-06 | 2.19E-03 | 1 | 4.38E+02 | 7.06E-06 | 2.19E-03 | 0.00E+00 |
| Phosphorous | 3 | | -1 | 30.97 | 0.00E+00 | -1.94E-03 | 2.00E+01 | 6.46E-07 | 9.99E-05 | 2.00E+01 | 6.46E-07 | 9.99E-05 | 1 | 2.00E+01 | 6.46E-07 | 9.99E-05 | 0.00E+00 |
| Potassium | 1 | 1 | | 39.10 | 9.03E-02 | 0.00E+00 | 3.53E+03 | 9.03E-05 | 1.76E-02 | 3.53E+03 | 9.03E-05 | 1.76E-02 | 1.2 | 2.94E+03 | 7.52E-05 | 1.47E-02 | 2.94E-03 |
| Selenium | 2 | 1 | | 79 | 1.06E-03 | 0.00E+00 | 4.20E+01 | 5.32E-07 | 2.10E-04 | 4.20E+01 | 5.32E-07 | 2.10E-04 | 1 | 4.20E+01 | 5.32E-07 | 2.10E-04 | 0.00E+00 |
| Silicon | 2 | | -1 | 28.10 | 0.00E+00 | -1.45E-01 | 2.04E+03 | 7.26E-05 | 1.02E-02 | 2.04E+03 | 7.26E-05 | 1.02E-02 | 10 | 2.04E+02 | 7.26E-06 | 1.02E-03 | 9.18E-03 |
| Silver | 1 | 1 | | 107.9 | 4.63E-06 | 0.00E+00 | 5.00E-01 | 4.63E-09 | 2.50E-06 | 5.00E-01 | 4.63E-09 | 2.50E-06 | 1.2 | 4.17E-01 | 3.86E-09 | 2.08E-06 | 4.10E-07 |
| Sodium | 1 | 1 | | 23.00 | 8.57E-01 | 0.00E+00 | 1.97E+04 | 8.57E-04 | 9.84E-02 | 1.97E+04 | 8.57E-04 | 9.84E-02 | 1 | 1.97E+04 | 8.57E-04 | 9.84E-02 | 0.00E+00 |
| Strontium | 2 | 1 | | 87.60 | 1.99E-03 | 0.00E+00 | 8.73E+01 | 9.97E-07 | 4.36E-04 | 8.73E+01 | 9.97E-07 | 4.36E-04 | 1.1 | 7.94E+01 | 9.06E-07 | 3.97E-04 | 3.97E-05 |
| Sulfate | 2 | | -1 | 96.00 | 0.00E+00 | -2.52E-01 | 1.21E+04 | 1.26E-04 | 6.06E-02 | 1.21E+04 | 1.26E-04 | 6.06E-02 | 1 | 1.21E+04 | 1.26E-04 | 6.06E-02 | 0.00E+00 |
| Uranium | 2 | 1 | | 238.00 | 2.30E-05 | 0.00E+00 | 2.04E+00 | 1.10E-08 | 1.42E-05 | 2.04E+00 | 1.10E-08 | 1.42E-05 | 10 | 2.84E-01 | 1.10E-09 | 1.42E-06 | 1.28E-05 |
| Vanadium | 2 | 1 | | 50.94 | 2.39E-04 | 0.00E+00 | 6.10E+00 | 1.20E-07 | 3.06E-05 | 6.10E+00 | 1.20E-07 | 3.06E-05 | 1 | 6.10E+00 | 1.20E-07 | 3.06E-05 | 0.00E+00 |
| Zinc | 2 | 1 | | 65.40 | 3.70E-04 | 0.00E+00 | 1.21E+01 | 1.85E-07 | 6.05E-05 | 1.21E+01 | 1.85E-07 | 6.05E-05 | 2.2 | 5.50E+00 | 8.41E-08 | 2.75E-05 | 3.30E-05 |
| Diatomaceous Earth | | | | | | | 0.00E+00 | | 0.00E+00 | 3.00E+03 | | 1.50E-02 | 100 | 3.00E+01 | | 1.50E-04 | 1.40E-02 |
| SUM INORGANICS | | | | | | | 7.14E+04 | 2.12E-03 | 3.57E-01 | 7.14E+04 | 2.12E-03 | 3.57E-01 | 1.040683 | 6.86E+04 | 2.04E-03 | 3.43E-01 | 1.38E-02 |
| Total Cations (meq/L) | | | | | | | 2.79E+00 | | | 2.79E+00 | | | | 2.67E+00 | | | |
| Total Anions (meq/L) | | | | | | | -4.87E-01 | | | -4.87E-01 | | | | -3.56E-01 | | | |
| Charge Balance (%) | | | | | | | NA | | | NA | | | | 5.07% | | | |
| Alkalinity (as CaCO3) | | | | | | | 1.12E-01 | | | 1.12E-01 | | | | 1.17E-01 | | | |
| pH (Dimensionless) | | | | | | | 7.30E+00 | | | 7.30E+00 | | | | 7.30E+00 | | | |
| Carbonate | 2 | | -1 | 60 | | | 1.70E+02 | 2.83E-06 | 8.40E-04 | 1.70E+02 | 2.83E-06 | 8.40E-04 | 0.960605 | 1.78E+02 | 2.96E-06 | 8.90E-04 | -3.85E-05 |
| Bicarbonate | 1 | | -1 | 61 | | | 1.35E+05 | 2.21E-03 | 6.73E-01 | 1.35E+05 | 2.21E-03 | 6.73E-01 | 0.958605 | 1.41E+05 | 2.31E-03 | 7.04E-01 | -3.05E-02 |
| TDS | | | | | | | 6.84E+04 | | 3.42E-01 | 6.84E+04 | | 3.42E-01 | 1 | 6.84E+04 | | 3.42E-01 | 0.00E+00 |
| TSS | | | | | | | 3.00E+03 | | 1.50E-02 | 6.00E+03 | | 3.00E-02 | 18.2 | 3.30E+02 | | 1.65E-03 | 2.83E-02 |
| Temperature (deg C) | | | | | | | 1.86E+01 | | | | | | | 1.86E+01 | | | |
| Organics | | | | | | | | | | | | | | | | | |
| Acetone | | | | | | | 1.73E+01 | | 8.64E-05 | 1.73E+01 | | 8.64E-05 | 1.3 | 1.33E+01 | | 6.65E-05 | 1.99E-05 |
| 1-butanol | | | | | | | 3.62E+01 | | 1.81E-04 | 3.62E+01 | | 1.81E-04 | 1 | 3.62E+01 | | 1.81E-04 | 0.00E+00 |
| 2-butanone | | | | | | | 2.91E+01 | | 1.46E-04 | 2.91E+01 | | 1.46E-04 | 1 | 2.91E+01 | | 1.46E-04 | 0.00E+00 |
| BHT | | | | | | | 1.35E+01 | | 6.74E-05 | 1.35E+01 | | 6.74E-05 | 1 | 1.35E+01 | | 6.74E-05 | 0.00E+00 |
| Hexone (MIBK) | | | | | | | 1.03E+01 | | 5.15E-05 | 1.03E+01 | | 5.15E-05 | 1.5 | 6.87E+00 | | 3.43E-05 | 1.72E-05 |
| Toluene | | | | | | | 5.30E+00 | | 2.00E-05 | 5.30E+00 | | 2.00E-05 | 1 | 5.30E+00 | | 2.00E-05 | 0.00E+00 |
| Trichloromethane | | | | | | | 5.10E+00 | | 2.59E-05 | 5.10E+00 | | 2.59E-05 | 1 | 5.10E+00 | | 2.59E-05 | 0.00E+00 |
| Methylene Chloride | | | | | | | | | | | | | 1 | 0.00E+00 | | 0.00E+00 | 0.00E+00 |
| Tetrachloroethene | | | | | | | 1.00E+00 | | 5.00E-06 | 1.00E+00 | | 5.00E-06 | 1 | 1.00E+00 | | 5.00E-06 | 0.00E+00 |
| Total Organic Carbon | | | | | | | 8.80E+02 | | 4.40E-03 | 8.80E+02 | | 4.40E-03 | 1 | 8.80E+02 | | 4.40E-03 | 0.00E+00 |
| Total Carbon | | | | | | | 1.19E+04 | | 5.95E-02 | 1.19E+04 | | 5.95E-02 | 1 | 1.19E+04 | | 5.95E-02 | 0.00E+00 |
| Total Organic Halides | | | | | | | 2.42E+01 | | 1.21E-04 | 2.42E+01 | | 1.21E-04 | 1 | 2.42E+01 | | 1.21E-04 | 0.00E+00 |
| Radionuclides | | | | | | | (ug/L) | (pCi/L) | (pCi/hr) | (ug/L) | (pCi/L) | (pCi/hr) | (DF) | (ug/L) | (pCi/L) | (pCi/hr) | (pCi/hr) |
| Total Alpha | | | | | | | | 4.90E+01 | 1.13E+05 | | 4.90E+01 | 1.13E+05 | 10 | | 4.90E+00 | 1.13E+04 | 1.02E+05 |
| Total Beta | | | | | | | | 1.65E+06 | 3.75E+09 | | 1.65E+06 | 3.75E+09 | 1 | | 1.65E+06 | 3.75E+09 | 0.00E+00 |
| Am-241 | | | | | | | 2.05E-05 | 7.03E+01 | 1.60E+05 | 2.05E-05 | 7.03E+01 | 1.60E+05 | 10 | 2.05E-06 | 7.03E+00 | 1.60E+04 | 1.44E+05 |
| Cm-242 | | | | | | | 1.46E-10 | 4.93E-01 | 1.12E+03 | 1.46E-10 | 4.93E-01 | 1.12E+03 | 10 | 1.46E-11 | 4.93E-02 | 1.12E+02 | 1.01E+03 |
| Cm-244 | | | | | | | 1.10E-08 | 8.92E-01 | 2.03E+03 | 1.10E-08 | 8.92E-01 | 2.03E+03 | 10 | 1.10E-09 | 8.92E-02 | 2.03E+02 | 1.82E+03 |
| Co-60 | | | | | | | 6.19E-06 | 7.00E+03 | 1.59E+07 | 6.19E-06 | 7.00E+03 | 1.59E+07 | 7.4 | 8.37E-07 | 9.46E+02 | 2.15E+06 | 1.37E+07 |
| Cs-134 | | | | | | | 1.29E-06 | 1.67E+03 | 3.79E+06 | 1.29E-06 | 1.67E+03 | 3.79E+06 | 1.1 | 1.17E-06 | 1.52E+03 | 3.45E+06 | 3.45E+05 |
| Cs-137 | | | | | | | 2.79E-03 | 4.71E+05 | 1.07E+09 | 2.79E-03 | 4.71E+05 | 1.07E+09 | 1.1 | 2.53E-03 | 4.28E+05 | 9.72E+08 | 9.72E+07 |
| C-14 | | | | | | | 9.50E-06 | 4.24E+01 | 9.63E+04 | 9.50E-06 | 4.24E+01 | 9.63E+04 | 1 | 9.50E-06 | 4.24E+01 | 9.63E+04 | 0.00E+00 |
| H-3 | | | | | | | 5.72E-04 | 5.54E+06 | 1.26E+10 | 5.72E-04 | 5.54E+06 | 1.26E+10 | 1 | 5.72E-04 | 5.54E+06 | 1.26E+10 | 0.00E+00 |
| Mn-54 | | | | | | | 7.79E-07 | 6.04E+03 | 1.37E+07 | 7.79E-07 | 6.04E+03 | 1.37E+07 | 3 | 2.60E-07 | 2.01E+03 | 4.57E+06 | 9.14E+06 |
| Pb-210 | | | | | | | 3.88E-07 | 2.97E+01 | 6.74E+04 | 3.88E-07 | 2.97E+01 | 6.74E+04 | 2.7 | 1.44E-07 | 1.10E+01 | 2.50E+04 | 4.25E+04 |
| Pu-238 | | | | | | | 6.37E-07 | 1.09E+01 | 2.48E+04 | 6.37E-07 | 1.09E+01 | 2.48E+04 | 10 | 6.37E-08 | 1.09E+00 | 2.48E+03 | 2.23E+04 |
| Pu-239/240 | | | | | | | 9.25E-04 | 6.66E+01 | 1.51E+05 | 9.25E-04 | 6.66E+01 | 1.51E+05 | 10 | 9.25E-05 | 6.66E+00 | 1.51E+04 | 1.36E+05 |
| Radium | | | | | | | 3.33E-07 | 3.30E-01 | 7.49E+02 | 3.33E-07 | 3.30E-01 | 7.49E+02 | 10 | 3.33E-08 | 3.30E-02 | 7.49E+01 | 6.74E+02 |
| Ru-106 | | | | | | | 2.57E-06 | 1.72E+04 | 3.91E+07 | 2.57E-06 | 1.72E+04 | 3.91E+07 | 1.7 | 1.51E-06 | 1.01E+04 | 2.30E+07 | 1.61E+07 |
| Sr-90 | | | | | | | 6.30E-03 | 1.70E+00 | 4.00E+00 | 6.30E-03 | 1.70E+00 | 4.00E+00 | 1.1 | 5.70E-03 | 1.60E+00 | 3.63E+00 | 3.63E+08 |
| U-234 | | | | | | | 2.56E-04 | 1.60E+00 | 3.63E+03 | 2.56E-04 | 1.60E+00 | 3.63E+03 | 10 | 2.56E-05 | 1.60E-01 | 3.63E+02 | 3.27E+03 |
| U-235 | | | | | | | 1.00E-01 | 2.17E-01 | 4.93E+02 | 1.00E-01 | 2.17E-01 | 4.93E+02 | 10 | 1.00E-02 | 2.17E-02 | 4.93E+01 | 4.44E+02 |
| U-238 | | | | | | | 3.36E+00 | 1.13E+00 | 2.57E+03 | 3.36E+00 | 1.13E+00 | 2.57E+03 | 10 | 3.36E-01 | 1.13E-01 | 2.57E+02 | 2.31E+03 |

Secondary Waste Volumes
Alternative C
Filtration

| | | |
|---|---|---|
| Assume: | 1.335 | Gal/sq ft before backflush, based on LETF data |
| | 480,000 | Gal/yr effluent |
| | 58.8 | ft2 of area, Mott LSI Filter, operated per vendor |
| | 8.33 | lb/Gal backflush water and filter solids mixed |
| | 104.4 | Gal H2O /backflush (assuming 2 filter volumes to backflush) |
| Feed Solids: | 2.83E-02 | lbs per hour |
| Precoat: | 6 | lbs per hour |
| Number of Operating Hours to Backflush | 130.83 | hrs/backflush |
| Number of Backflushes per year | 6 | backflushes/yr |
| Volume of Backflushes per Year | 638.3096 | gal/yr |
| Per year will generate | 5,317 | kg of unstabilized filter solids and backflush water |
| Assume: | 1 | lb cement/lb solid slurry to stabilize |
| | 94 | lb/ft3 dry Portland cement density |
| Portland Cement Required = | 56.5651 | ft3 per year |
| Stabilized Volume = | 141.7753 | ft3 per year |
| # of Drums of Stabilized Product | 19.28145 | Drums per year |

Alternative C

| Design Criteria Ion Exchange | | |
|---|---|---|
| Influent From Filter | | |
| 10 | Flow Rate, GPM | |
| | K [NH4+=NH3] | 6.30E-10 |
| | K [HCO3-=CO3] | 5.60E-11 |
| 10 | Max Service Flow, GPM/ft2 (Vendor Data) | |
| 1.75 | Min Service Flow, GPM/ft2 (Vendor Data) | |
| 24 | Minimum IX Run Time, Hours | |
| 479167 | Total Volume Treated, Gal/Yr | |
| | Assume Strong Acid Followed by Weak Base | |
| 5 | Pairs of IX Columns in Series | |
| 800 | Hours per year operation time | |
| 0 | Gal/yr treated effluent | |

Conversions
Specific Activity

| | Sa(ci/g) | Sa(pci/g) |
|---|---|---|
| Am-241 | 3.43E+00 | 3.43E+12 |
| Cm-242 | 3.31E+03 | 3.31E+15 |
| Cm-244 | 8.10E+01 | 8.10E+13 |
| Co-60 | 1.13E+03 | 1.13E+15 |
| Cs-134 | 1.30E+03 | 1.30E+15 |
| Cs-137 | 1.00E+02 | 1.00E+14 |
| C-14 | 4.40E+00 | 4.40E+12 |
| H-3 | 9.60E+03 | 9.60E+15 |
| Mn-54 | 7.70E+03 | 7.70E+15 |
| Pb-210 | 7.65E+01 | 7.65E+13 |
| Pu-238 | 1.71E+01 | 1.71E+13 |
| Pu-239/240 | 7.20E-02 | 7.20E+10 |
| Radium | 9.90E-01 | 9.90E+11 |
| Ru-106 | 6.60E+03 | 6.60E+15 |
| Sr-90 | 2.70E+02 | 2.70E+14 |
| U-234 | 6.25E-03 | 6.25E+09 |
| U-235 | 2.10E-06 | 2.10E+06 |
| U-238 | 3.30E-07 | 3.30E+05 |

| Chemical | Valence | Chg | | MW | Cations (meq/L) | Anions (meq/L) | Point 3 Concentrations Entering Ion Exchange From Filter (ug/L) | Point 3 (Mol/L) | Point 3 (Lbs/Hr) | DF Reqd Assumed | Point 4 Concentrations Exiting Ion Exchange (ug/L) | Point 4 (Mol/L) | Point 4 (Lbs/Hr) | Point 5 IX Column Load (Lbs/Hr) |
|---|---|---|---|---|---|---|---|---|---|---|---|---|---|---|
| Inorganics | | | | | | | | | | | | | | |
| Ammonia (Total N) | | | | 18 | | | 2.23E+02 | 1.24E-05 | 1.12E-03 | | 2.20E-02 | 1.22E-09 | 1.10E-07 | 1.12E-03 |
| Ammonia | | | | 17 | | | 3.00E+00 | 1.76E-07 | 1.50E-05 | | 0.00E+00 | 0.00E+00 | 0.00E+00 | 1.50E-05 |
| Ammonium | 1 | 1 | | 18 | 1.22E-02 | 0.00E+00 | 2.20E+02 | 1.22E-05 | 1.10E-03 | 10000 | 2.20E-02 | 1.22E-09 | 1.10E-07 | 1.10E-03 |
| Aluminum | 3 | 1 | | 27 | 5.95E-04 | 0.00E+00 | 5.36E+00 | 1.98E-07 | 2.68E-05 | 10000 | 5.36E-04 | 1.98E-11 | 2.68E-09 | 2.68E-05 |
| Antimony | 1 | 1 | | 121.75 | 1.05E-04 | 0.00E+00 | 1.27E+01 | 1.05E-07 | 6.37E-05 | 10000 | 1.27E-03 | 1.05E-11 | 6.37E-09 | 6.37E-05 |
| Arsenic | 3 | 1 | | 74.9 | 4.73E-04 | 0.00E+00 | 1.18E+01 | 1.58E-07 | 5.91E-05 | 10000 | 1.18E-03 | 1.58E-11 | 5.91E-09 | 5.91E-05 |
| Barium | 2 | 1 | | 137.30 | 1.17E-03 | 0.00E+00 | 8.00E+01 | 5.83E-07 | 4.00E-04 | 10000 | 8.00E-03 | 5.83E-11 | 4.00E-08 | 4.00E-04 |
| Boron | 3 | 1 | | 10.80 | 2.11E-02 | 0.00E+00 | 7.58E+01 | 7.02E-06 | 3.79E-04 | 10000 | 7.58E-03 | 7.02E-10 | 3.79E-08 | 3.79E-04 |
| Cadmium | 2 | 1 | | 112.40 | 4.11E-05 | 0.00E+00 | 2.31E+00 | 2.06E-08 | 1.16E-05 | 10000 | 2.31E-04 | 2.06E-12 | 1.16E-09 | 1.16E-05 |
| Calcium | 2 | 1 | | 40.10 | 1.13E+00 | 0.00E+00 | 2.28E+04 | 5.67E-04 | 1.14E-01 | 10000 | 2.28E+00 | 5.67E-08 | 1.14E-05 | 1.14E-01 |
| Chloride | 1 | | -1 | 35.50 | 0.00E+00 | -7.32E-02 | 2.60E+03 | 7.32E-05 | 1.30E-02 | 10000 | 2.60E-01 | 7.32E-09 | 1.30E-06 | 1.30E-02 |
| Chromium | 2 | | -1 | 52 | 0.00E+00 | -4.53E-05 | 1.18E+00 | 2.26E-08 | 5.88E-06 | 10000 | 1.18E-04 | 2.26E-12 | 5.88E-10 | 5.88E-06 |
| Cobalt | 2 | 1 | | 59 | 0.00E+00 | 0.00E+00 | 0.00E+00 | 0.00E+00 | 0.00E+00 | 10000 | 0.00E+00 | 0.00E+00 | 0.00E+00 | 0.00E+00 |
| Copper | 2 | 1 | | 63.55 | 4.10E-04 | 0.00E+00 | 1.30E+01 | 2.05E-07 | 6.52E-05 | 10000 | 1.30E-03 | 2.05E-11 | 6.52E-09 | 6.52E-05 |
| Fluoride | 1 | | -1 | 20.10 | 0.00E+00 | -7.26E-03 | 2.04E+02 | 7.26E-06 | 1.02E-03 | 10000 | 2.04E-02 | 7.26E-10 | 1.02E-07 | 1.02E-03 |
| Iron | 2 | 1 | | 56.00 | 3.71E-04 | 0.00E+00 | 1.03E+01 | 1.85E-07 | 5.18E-05 | 10000 | 1.03E-03 | 1.85E-11 | 5.18E-09 | 5.18E-05 |
| Lead | 2 | 1 | | 207.2 | 1.39E-04 | 0.00E+00 | 1.44E+01 | 6.97E-08 | 7.23E-05 | 10000 | 1.44E-03 | 6.97E-12 | 7.23E-09 | 7.22E-05 |
| Magnesium | 2 | 1 | | 24.30 | 5.60E-01 | 0.00E+00 | 6.81E+03 | 2.80E-04 | 3.40E-02 | 10000 | 6.81E-01 | 2.80E-08 | 3.40E-06 | 3.40E-02 |
| Manganese | 2 | 1 | | 54.90 | 1.06E-03 | 0.00E+00 | 2.90E+01 | 5.29E-07 | 1.45E-04 | 10000 | 2.90E-03 | 5.29E-11 | 1.45E-08 | 1.45E-04 |
| Nickel | 2 | 1 | | 58.7 | 2.56E-04 | 0.00E+00 | 7.50E+00 | 1.28E-07 | 3.75E-05 | 10000 | 7.50E-04 | 1.28E-11 | 3.75E-09 | 3.75E-05 |
| Nitrate | 1 | | -1 | 62.00 | 0.00E+00 | -7.06E-03 | 4.38E+02 | 7.06E-06 | 2.10E-03 | 10000 | 4.38E-02 | 7.06E-10 | 2.10E-07 | 2.10E-03 |
| Phosphorus | 3 | | -1 | 30.97 | 0.00E+00 | -1.94E-03 | 2.00E+01 | 6.46E-07 | 1.00E-04 | 10000 | 2.00E-03 | 6.46E-11 | 1.00E-08 | 1.00E-04 |
| Potassium | 1 | 1 | | 39.10 | 7.52E-02 | 0.00E+00 | 2.94E+03 | 7.52E-05 | 1.47E-02 | 10000 | 2.94E-01 | 7.52E-09 | 1.47E-06 | 1.47E-02 |
| Selenium | 2 | 1 | | 79 | 1.06E-03 | 0.00E+00 | 4.20E+01 | 5.32E-07 | 2.10E-04 | 10000 | 4.20E-03 | 5.32E-11 | 2.10E-08 | 2.10E-04 |
| Silicon | 2 | | -1 | 28.10 | 0.00E+00 | -1.45E-02 | 2.04E+02 | 7.26E-06 | 1.02E-03 | 10000 | 2.04E-02 | 7.26E-10 | 1.02E-07 | 1.02E-03 |
| Silver | 1 | 1 | | 107.9 | 3.86E-06 | 0.00E+00 | 4.17E-01 | 3.86E-09 | 2.08E-06 | 10000 | 4.17E-05 | 3.86E-13 | 2.08E-10 | 2.08E-06 |
| Sodium | 1 | 1 | | 23.00 | 8.57E-01 | 0.00E+00 | 1.97E+04 | 8.57E-04 | 9.85E-02 | 10000 | 1.97E+00 | 8.57E-08 | 9.85E-06 | 9.85E-02 |
| Strontium | 2 | 1 | | 87.60 | 1.81E-03 | 0.00E+00 | 7.94E+01 | 9.06E-07 | 3.97E-04 | 10000 | 7.94E-03 | 9.06E-11 | 3.97E-08 | 3.97E-04 |
| Sulfate | 2 | | -1 | 96.00 | 0.00E+00 | -2.52E-01 | 1.21E+04 | 1.26E-04 | 6.05E-02 | 10000 | 1.21E+00 | 1.26E-08 | 6.05E-06 | 6.05E-02 |
| Uranium | 2 | 1 | | 238.00 | 2.30E-06 | 0.00E+00 | 2.94E-01 | 1.10E-09 | 1.47E-06 | 10000 | 2.94E-05 | 1.10E-13 | 1.47E-10 | 1.47E-06 |
| Vanadium | 2 | 1 | | 50.94 | 2.39E-04 | 0.00E+00 | 6.10E+00 | 1.20E-07 | 3.05E-05 | 10000 | 6.10E-04 | 1.20E-11 | 3.05E-09 | 3.05E-05 |
| Zinc | 2 | 1 | | 65.40 | 1.68E-04 | 0.00E+00 | 5.50E+00 | 8.41E-08 | 2.75E-05 | 10000 | 5.50E-04 | 8.41E-12 | 2.75E-09 | 2.75E-05 |
| Total Inorganics | | | | | | | 6.86E+04 | 2.04E-03 | 3.43E-01 | | 6.86E+00 | 2.04E-07 | 3.43E-05 | 3.43E-01 |
| Total Cations (meq/L) | | | | | | | 2.87E+00 | | | | 2.87E-04 | | | |
| Total Anions (meq/L) | | | | | | | -3.56E-01 | | | | -3.56E-05 | | | |
| Charge Balance (%) | | | | | | | NA | | | | 00.00% | | | |
| Alkalinity (as CaCO3) | | | | | | | 1.17E-01 | | | | 0.00E+00 | | | |
| pH (Dimensionless) | | | | | | | 7.30E+00 | | | | 3.45E+00 | | | |
| Carbonate | 2 | | -1 | 60 | | -3.56E+05 | 1.70E+02 | 2.90E-06 | 8.50E-04 | | 0.00E+00 | 0.00E+00 | 0.00E+00 | 8.50E-04 |
| Bicarbonate | 1 | | -1 | 61 | | -1.41E+00 | 1.41E+05 | 2.31E-03 | 7.04E-01 | | 0.00E+00 | 0.00E+00 | 0.00E+00 | 7.04E-01 |
| TDS | | | | | | | 6.84E+04 | | 3.42E-01 | 10000 | 6.84E+00 | | | |
| TSS | | | | | | | 3.30E+02 | | 1.65E-03 | 1 | 3.30E+02 | | | |
| Temperature (deg C) | | | | | | | 1.86E+01 | | | | 1.86E+01 | | | |
| Organics | | | | | | | | | | | | | | |
| Acetone | | | | | | | 1.33E+01 | | 6.65E-05 | 1 | 1.33E+01 | | 6.65E-05 | 0.00E+00 |
| 1-butanol | | | | | | | 3.62E+01 | | 1.81E-04 | 1 | 3.62E+01 | | 1.81E-04 | 0.00E+00 |
| 2-butanone | | | | | | | 2.81E+01 | | 1.40E-04 | 1 | 2.81E+01 | | 1.40E-04 | 0.00E+00 |
| BHT | | | | | | | 1.35E+01 | | 6.75E-05 | 1 | 1.35E+01 | | 6.75E-05 | 0.00E+00 |
| Hexone (MIBK) | | | | | | | 6.87E+00 | | 3.43E-05 | 1 | 6.87E+00 | | 3.43E-05 | 0.00E+00 |
| Toluene | | | | | | | 5.30E+00 | | 2.65E-05 | 1 | 5.30E+00 | | 2.65E-05 | 0.00E+00 |
| Trichloroethane | | | | | | | 5.10E+00 | | 2.55E-05 | 1 | 5.10E+00 | | 2.55E-05 | 0.00E+00 |
| Methylene Chloride | | | | | | | 0.00E+00 | | 0.00E+00 | 1 | 0.00E+00 | | 0.00E+00 | 0.00E+00 |
| Tetrachloroethane | | | | | | | 1.00E+00 | | 5.00E-06 | 1 | 1.00E+00 | | 5.00E-06 | 0.00E+00 |
| Total Organic Carbon | | | | | | | 8.80E+02 | | 4.40E-03 | 1 | 8.80E+02 | | 4.40E-03 | 0.00E+00 |
| Total Carbon | | | | | | | 1.10E+04 | | 5.50E-02 | 1 | 1.10E+04 | | 5.50E-02 | 0.00E+00 |
| Total Organic Halides | | | | | | | 2.42E+01 | | 1.21E-04 | 1 | 2.42E+01 | | 1.21E-04 | 0.00E+00 |
| Radionuclides | | | | | | | (ug/L) | (pci/L) | (pci/hr) | | (ug/L) | (pci/L) | (pci/hr) | (pci/hr) |
| Total Alpha | | | | | | | | 4.90E+00 | 1.13E+04 | 10000 | | 4.90E-04 | 1.13E+00 | 1.13E+04 |
| Total Beta | | | | | | | | 1.66E+00 | 3.75E+00 | 9344 | | 1.77E+02 | 4.01E+05 | 3.75E+00 |
| Am-241 | | | | | | | 2.05E-06 | 7.03E+00 | 1.60E+04 | 10000 | 2.05E-10 | 7.03E-04 | 4.65E-07 | 1.60E+04 |
| Cm-242 | | | | | | | 1.40E-11 | 4.93E-02 | 1.12E+02 | 10000 | 1.40E-15 | 4.93E-06 | 3.30E-12 | 1.12E+02 |
| Cm-244 | | | | | | | 1.10E-09 | 8.92E-02 | 2.03E+02 | 10000 | 1.10E-13 | 8.92E-06 | 2.50E-10 | 2.03E+02 |
| Co-60 | | | | | | | 8.37E-07 | 9.46E+02 | 2.15E+06 | 10000 | 8.37E-11 | 9.46E-02 | 1.90E-07 | 2.15E+06 |
| Cs-134 | | | | | | | 1.17E-06 | 1.52E+03 | 3.46E+06 | 10000 | 1.17E-10 | 1.52E-01 | 2.65E-07 | 3.46E+06 |
| Cs-137 | | | | | | | 2.53E-03 | 4.20E+05 | 9.72E+08 | 10000 | 2.53E-07 | 4.20E+01 | 5.75E-04 | 9.72E+08 |
| C-14 | | | | | | | 9.50E-08 | 4.24E+01 | 9.63E+04 | 1 | 9.50E-08 | 4.24E+01 | 2.16E-02 | 9.63E+04 |
| H-3 | | | | | | | 5.72E-04 | 5.54E+06 | 1.26E+10 | 1 | 5.72E-04 | 5.54E+06 | 1.30E+00 | 1.26E+10 |
| Mn-54 | | | | | | | 2.60E-07 | 2.01E+03 | 4.57E+06 | 10000 | 2.60E-11 | 2.01E-01 | 5.89E-08 | 4.57E+06 |
| Pb-210 | | | | | | | 1.44E-07 | 1.10E+01 | 2.50E+04 | 10000 | 1.44E-11 | 1.10E-03 | 3.27E-08 | 2.50E+04 |
| Pu-238 | | | | | | | 6.37E-08 | 1.09E+00 | 2.48E+03 | 10000 | 6.37E-12 | 1.09E-04 | 1.45E-08 | 2.48E+03 |
| Pu-239/240 | | | | | | | 9.25E-05 | 6.66E+00 | 1.51E+04 | 10000 | 9.25E-09 | 6.66E-04 | 2.10E-05 | 1.51E+04 |
| Radium | | | | | | | 3.33E-08 | 3.30E-02 | 7.48E+01 | 10000 | 3.33E-12 | 3.30E-06 | 7.57E-09 | 7.48E+01 |
| Ru-106 | | | | | | | 1.51E-06 | 1.01E+04 | 2.30E+07 | 10000 | 1.51E-10 | 1.01E+00 | 3.43E-07 | 2.30E+07 |
| Sr-90 | | | | | | | 5.70E-03 | 1.60E+06 | 3.63E+09 | 10000 | 5.70E-07 | 1.60E+02 | 1.31E-03 | 3.63E+09 |
| U-234 | | | | | | | 2.50E-05 | 1.60E-01 | 3.63E+02 | 10000 | 2.50E-09 | 1.60E-05 | 5.81E-09 | 3.63E+02 |
| U-235 | | | | | | | 1.00E-02 | 2.17E-02 | 4.93E+01 | 10000 | 1.00E-06 | 2.17E-06 | 2.28E-03 | 4.93E+01 |
| U-238 | | | | | | | 3.30E-01 | 1.13E-01 | 2.57E+02 | 10000 | 3.30E-05 | 1.13E-05 | 7.64E-02 | 2.57E+02 |

Design Calculations for Ion Exchange System
Alternative C

Influent and Effluent Composition

| | Cations | | Anions | |
|---|---|---|---|---|
| Influent | 2.667675 meq/L | | 0.356156 meq/L | |
| Effluent | 0.000267 meq/L | | 0.000036 meq/L | |
| Removed | 2.667408 meq/L or | 10.09614 meq/Gal | 0.356121 meq/L or | 1.347917 meq/Gal |

Strong Acid Resin Capacity

% Sodium 32.10743 %
% Alkalinity 99.74826 %

Using Culligan Water Company Tables
Capacity 37792.21 meq/ft3

Weak Base Resin Capacity

Using Culligan Water Company Tables
Capacity 27272.73 meq/ft3

Column Sizing Calculations

| | | |
|---|---|---|
| Strong Acid Resin Usage | 0.000534 ft3/gal | (assume 50% safety factor) |
| | 256.0177 ft3/yr | |
| Weak Base Resin Usage | 0.000099 ft3/gal | (assume 50% safety factor) |
| | 47.36434 ft3/yr | |
| Strong Acid Column Minimum Size | 7.693883 ft3 | |
| Weak Base Column Minimum Size | 1.4234 ft3 | |
| Chosen SA Size | 13 ft3 | |
| Chosen WB Size | 11 ft3 | |
| Minimum Column Diameter | 1.128378 ft | |
| Maximum Column Diameter | 2.697339 ft | |
| Chosen Size | 1.666667 ft | |

Regeneration Waste

| | |
|---|---|
| Strong Acid Column | 2632.3 Gal/Regen |
| | 51839.64 Gal/Year |
| Weak Base Column | 2632.3 Gal/Regen |
| | 11334.29 Gal/Year |
| Regeneration Time (SA Column) | 9.91902 Hrs/Regen |

Regeneration Calculations

Chemicals

| | |
|---|---|
| H2SO4 | 2 wt% |
| NaOH | 4 wt% |

Backwash+Rinse 4 Bed Volumes Each Column

| | |
|---|---|
| Volume | 388.96 Gal/Column |
| Flowrate | 5 gpm/ft2 |
| Duration | 169.7162 min |

Regeneration

SA Column 12 #H2SO4/ft3

| | |
|---|---|
| Volume | 975 Gal/Column |
| Flowrate | 5 gpm/ft2 |
| Duration | 425.425 min |

WB Column 4 #NaOH/ft3

| | |
|---|---|
| Volume | 137.5 Gal/Column |
| Flowrate | 5 gpm/ft2 |
| Duration | 59.99583 min |

Alternative C

Design Criteria
pH Adjustment
Influent From Ion Exchange
400,000 Gal/yr treated effluent
10 Flow Rate, GPM
000 Hours per Year Treatment System is in use

4.3E-07 = K [H+][HCO3-]/[H2CO3] — 0.3E-10
K [H+][CO3--]/[HCO3-] — 5.6E-11

7 Needed pH
3.452175 Incoming pH

pH Adjustment Calculations

Initial HCO3 = 0.00E+00 m — 0 m [H+] steady
Initial CO3 = 0.00E+00 m — 0 m [H+]
Initial H2CO3 = 2.31E-03 m
x = -9.04E-03 — Final H2CO3 = 0.00E+00 m
z = -4.27E-03 — Final HCO3 = 0.00E+00
y = 3.20E-02 — Final CO3 = 4.27E-03

Total H+ Required = 3.20E-02 mol/L NaOH — 2.30E+03 kgyr NaOH
1.31E+06 ug/L NaOH

Design Basis
Specific Activity

| | Sa(pci/g) | Sa(ppm/g) |
|---|---|---|
| Am-241 | 3.43E+00 | 3.43E+12 |
| Cm-242 | 3.31E+03 | 3.31E+15 |
| Cm-244 | 8.10E+01 | 8.10E+13 |
| Co-60 | 1.13E+03 | 1.13E+15 |
| Cs-134 | 1.30E+03 | 1.30E+15 |
| Cs-137 | 1.00E+02 | 1.00E+14 |
| C-14 | 4.40E+00 | 4.40E+12 |
| H-3 | 9.00E+03 | 9.00E+15 |
| Mn-54 | 7.70E+03 | 7.70E+15 |
| Pb-210 | 7.05E+01 | 7.05E+13 |
| Pu-238 | 1.71E+01 | 1.71E+13 |
| Pu-239/240 | 7.20E+02 | 7.20E+10 |
| Radium | 9.00E-01 | 9.00E+11 |
| Ru-106 | 6.00E+03 | 6.00E+15 |
| Sr-90 | 2.70E+02 | 2.70E+14 |
| U-234 | 6.25E-03 | 6.25E+00 |
| U-235 | 2.10E-06 | 2.10E+00 |
| U-238 | 3.30E-07 | 3.30E+05 |

| Chemical | Valence | Chg | MW | Cations (meq/L) | Anions (meq/L) | Point 7 Concentrations Entering pH Adjustment From GAC (ug/L) | (mol/L) | (Ion/L) | Point 8 Concentrations Entering From pH Adjustment (ug/L) | (mol/L) | (Ion/L) |
|---|---|---|---|---|---|---|---|---|---|---|---|
| **Inorganics** | | | | | | | | | | | |
| Ammonia (Total N) | | | 18 | | | 2.20E-02 | 1.27E-00 | 1.10E-07 | 4.37E-02 | 2.43E-00 | 2.19E-07 |
| Ammonia | | | 17 | | | 0.00E+00 | 0.00E+00 | 0.00E+00 | 2.18E-02 | 1.21E-00 | 1.09E-07 |
| Ammonium | 1 | 1 | 18 | 1.27E-00 | 0.00E+00 | 2.20E-02 | 1.22E-00 | 1.10E-07 | 2.18E-02 | 1.21E-00 | 1.09E-07 |
| Aluminum | 3 | 1 | 27 | 5.95E-00 | 0.00E+00 | 5.35E-04 | 1.98E-11 | 2.00E-00 | 5.35E-04 | 1.98E-11 | 2.00E-00 |
| Antimony | 1 | 1 | 121.75 | 1.05E-00 | 0.00E+00 | 1.27E-03 | 1.05E-11 | 0.37E-00 | 1.27E-03 | 1.05E-11 | 0.37E-00 |
| Arsenic | 3 | 1 | 74.9 | 4.72E-00 | 0.00E+00 | 1.18E-03 | 1.58E-11 | 5.91E-00 | 1.18E-03 | 1.58E-11 | 5.91E-00 |
| Barium | 2 | 1 | 137.30 | 1.17E-07 | 0.00E+00 | 0.00E-03 | 5.83E-11 | 4.00E-00 | 0.00E-03 | 5.83E-11 | 4.00E-00 |
| Boron | 3 | 1 | 10.80 | 2.11E-00 | 0.00E+00 | 7.56E-03 | 7.02E-10 | 3.79E-00 | 7.56E-03 | 7.02E-10 | 3.79E-00 |
| Cadmium | 2 | 1 | 112.40 | 4.16E-00 | 0.00E+00 | 2.31E-04 | 2.06E-12 | 1.15E-00 | 2.31E-04 | 2.06E-12 | 1.15E-00 |
| Calcium | 2 | 1 | 40.10 | 1.13E-04 | 0.00E+00 | 2.20E+00 | 5.67E-00 | 1.14E-05 | 2.20E+00 | 5.67E-00 | 1.14E-05 |
| Chloride | 1 | -1 | 35.50 | 0.00E+00 | -7.32E-00 | 2.00E-01 | 7.32E-00 | 1.30E-00 | 2.00E-01 | 7.37E-00 | 1.30E-00 |
| Chromium | 2 | -1 | 52 | 0.00E+00 | -4.57E-00 | 1.10E-04 | 2.20E-12 | 5.00E-10 | 1.10E-04 | 2.20E-12 | 5.00E-10 |
| Cobalt | 2 | 1 | 59 | 0.00E+00 | 0.00E+00 | 0.00E+00 | 0.00E+00 | 0.00E+00 | 0.00E+00 | 0.00E+00 | 0.00E+00 |
| Copper | 2 | 1 | 63.55 | 4.10E-00 | 0.00E+00 | 1.30E-03 | 2.06E-11 | 0.52E-00 | 1.30E-03 | 2.06E-11 | 0.52E-00 |
| Fluoride | 1 | -1 | 19.10 | 0.00E+00 | -7.24E-07 | 2.04E-02 | 7.20E-10 | 1.02E-07 | 2.04E-02 | 7.20E-10 | 1.02E-07 |
| Iron | 2 | 1 | 55.80 | 3.71E-00 | 0.00E+00 | 1.83E-03 | 1.05E-11 | 5.10E-00 | 1.83E-03 | 1.05E-11 | 5.10E-00 |
| Lead | 2 | 1 | 207.2 | 1.30E-00 | 0.00E+00 | 1.44E-03 | 6.97E-12 | 7.23E-00 | 1.44E-03 | 6.97E-12 | 7.23E-00 |
| Magnesium | 2 | 1 | 24.30 | 5.00E-05 | 0.00E+00 | 6.91E-01 | 2.00E-00 | 3.40E-00 | 6.91E-01 | 2.00E-00 | 3.40E-00 |
| Manganese | 2 | 1 | 54.94 | 1.00E-07 | 0.00E+00 | 2.90E-03 | 5.29E-11 | 1.45E-00 | 2.90E-03 | 5.29E-11 | 1.45E-00 |
| Nickel | 2 | 1 | 58.7 | 2.56E-00 | 0.00E+00 | 7.50E-04 | 1.29E-11 | 3.75E-00 | 7.50E-04 | 1.29E-11 | 3.75E-00 |
| Nitrate | 1 | -1 | 62.00 | 0.00E+00 | -7.00E-07 | 4.30E-02 | 7.00E-10 | 2.19E-07 | 4.30E-02 | 7.00E-10 | 2.19E-07 |
| Phosphorous | 3 | -1 | 30.97 | 0.00E+00 | -1.94E-07 | 2.90E-03 | 0.46E-11 | 1.00E-00 | 2.90E-03 | 0.46E-11 | 1.00E-00 |
| Potassium | 1 | 1 | 39.10 | 7.53E-00 | 0.00E+00 | 2.94E-01 | 7.52E-00 | 1.47E-06 | 2.94E-01 | 7.52E-00 | 1.47E-06 |
| Selenium | 2 | 1 | 79 | 1.00E-07 | 0.00E+00 | 4.20E-03 | 5.32E-11 | 2.10E-00 | 4.20E-03 | 5.32E-11 | 2.10E-00 |
| Silicon | 2 | -1 | 28.10 | 0.00E+00 | -1.46E-00 | 2.94E-02 | 7.20E-10 | 1.02E-07 | 2.04E-02 | 7.20E-10 | 1.02E-07 |
| Silver | 1 | 1 | 107.9 | 3.00E-10 | 0.00E+00 | 4.17E-05 | 3.86E-13 | 2.08E-10 | 4.17E-05 | 3.86E-13 | 2.08E-10 |
| Sodium | 1 | 1 | 23.00 | 8.57E-05 | 0.00E+00 | 1.97E+00 | 8.57E-00 | 0.86E-00 | 1.54E+05 | 3.20E-02 | 3.77E+00 |
| Strontium | 2 | 1 | 87.60 | 1.01E-07 | 0.00E+00 | 7.04E-03 | 0.00E-11 | 3.07E-00 | 7.04E-03 | 0.00E-11 | 3.07E-00 |
| Sulfate | 2 | -1 | 96.06 | 0.00E+00 | -2.52E-05 | 1.21E+00 | 1.20E-00 | 0.06E-00 | 1.21E+00 | 1.20E-00 | 0.06E-00 |
| Uranium | 2 | 1 | 238.00 | 2.30E-10 | 0.00E+00 | 2.04E-05 | 1.10E-13 | 1.42E-10 | 2.04E-05 | 1.10E-13 | 1.42E-10 |
| Vanadium | 2 | 1 | 50.94 | 2.30E-00 | 0.00E+00 | 6.10E-04 | 1.20E-11 | 3.05E-00 | 6.10E-04 | 1.20E-11 | 3.05E-00 |
| Zinc | 2 | 1 | 65.40 | 1.00E-00 | 0.00E+00 | 5.50E-04 | 0.41E-12 | 2.75E-00 | 5.50E-04 | 0.41E-12 | 2.75E-00 |
| Total Inorganics | | | | | | 6.00E+00 | 2.34E-07 | 3.13E-05 | 7.54E+05 | 3.20E-02 | 3.77E+00 |
| Total Cations (meq/L) | | | | | | 2.07E-04 | | | 3.20E+01 | | |
| Total Anions (meq/L) | | | | | | -3.50E-05 | | | -3.50E-05 | | |
| Charge Balance (%) | | | | | | 1.00E+00 | | | | | |
| Alkalinity (as CaCO3) | | | | | | 0.00E+00 | | | 4.31E+00 | | |
| pH (Dimensionless) | | | | | | 3.46E+00 | | | 7.00E+00 | | |
| Carbonate | 2 | -1 | 60 | | | 0.00E+00 | 0.00E+00 | 0.00E+00 | 2.56E+00 | 4.27E-02 | 1.28E+01 |
| Bicarbonate | 1 | -1 | 61 | | | 0.00E+00 | 0.00E+00 | 0.00E+00 | 0.00E+00 | 0.00E+00 | 0.00E+00 |
| TDS | | | | | | 6.04E+04 | | 3.42E-01 | 6.04E+04 | | 3.42E-01 |
| TSS | | | | | | 3.30E+02 | | 1.86E-03 | 3.30E+02 | | 1.86E-03 |
| Temperature (deg C) | | | | | | 1.86E+01 | | | 1.86E+01 | | |
| **Organics** | | | | | | | | | | | |
| Acetone | | | | | | 1.33E+01 | | 0.00E-05 | 1.33E+01 | | 0.00E-05 |
| 1-butanol | | | | | | 3.62E+01 | | 1.81E-04 | 3.62E+01 | | 1.81E-04 |
| 2-butanone | | | | | | 2.91E+01 | | 1.46E-04 | 2.91E+01 | | 1.46E-04 |
| BHT | | | | | | 1.36E+01 | | 0.75E-05 | 1.36E+01 | | 0.75E-05 |
| Hexone (MIBK) | | | | | | 0.87E+00 | | 3.43E-06 | 0.87E+00 | | 3.43E-06 |
| Toluene | | | | | | 5.30E+00 | | 2.00E-05 | 5.30E+00 | | 2.00E-05 |
| Trichloromethane | | | | | | 5.10E+00 | | 2.00E-05 | 5.10E+00 | | 2.00E-05 |
| Methylene Chloride | | | | | | 0.00E+00 | | 0.00E+00 | 0.00E+00 | | 0.00E+00 |
| Tetrachloroethene | | | | | | 1.00E+00 | | 5.00E-06 | 1.00E+00 | | 5.00E-06 |
| Total Organic Carbon | | | | | | 8.00E+02 | | 4.40E-03 | 8.00E+02 | | 4.40E-03 |
| Total Carbon | | | | | | 1.10E+04 | | 5.95E-02 | 1.10E+04 | | 5.95E-02 |
| Total Organic Halides | | | | | | 2.42E+01 | | 1.21E-04 | 2.42E+01 | | 1.21E-04 |
| **Radionuclides** | | | | | | (ug/L) | (pci/L) | (pci/g) | (ug/L) | (pci/L) | (pci/g) |
| Total Alpha | | | | | | | 4.00E-04 | 1.13E+00 | | 4.00E-04 | 1.13E+00 |
| Total Beta | | | | | | | 1.77E+02 | 4.91E+05 | | 1.77E+02 | 4.91E+05 |
| Am-241 | | | | | | 2.05E-10 | 7.83E-04 | 1.00E+00 | 2.05E-10 | 7.83E-04 | 1.00E+00 |
| Cm-242 | | | | | | 1.49E-15 | 4.93E-00 | 1.12E-02 | 1.49E-15 | 4.93E-00 | 1.12E-02 |
| Cm-244 | | | | | | 1.10E-13 | 0.82E-04 | 2.83E-02 | 1.10E-13 | 0.92E-00 | 2.83E-02 |
| Co-60 | | | | | | 0.37E-11 | 9.40E-02 | 2.15E+02 | 0.37E-11 | 9.40E-02 | 2.16E+02 |
| Cs-134 | | | | | | 1.17E-10 | 1.52E-01 | 3.46E+02 | 1.17E-10 | 1.52E-01 | 3.46E+02 |
| Cs-137 | | | | | | 2.53E-07 | 4.20E+01 | 9.72E+04 | 2.53E-07 | 4.20E+01 | 9.72E+04 |
| C-14 | | | | | | 9.50E-00 | 4.24E+01 | 9.63E+04 | 9.50E-00 | 4.24E+01 | 9.63E+04 |
| H-3 | | | | | | 5.72E-04 | 5.54E+00 | 1.20E+10 | 5.72E-04 | 5.54E+00 | 1.20E+10 |
| Mn-54 | | | | | | 2.50E-11 | 2.91E-01 | 4.57E+02 | 2.50E-11 | 2.91E-01 | 4.57E+02 |
| Pb-210 | | | | | | 1.44E-11 | 1.10E-03 | 2.50E+00 | 1.44E-11 | 1.10E-03 | 2.50E+00 |
| Pu-238 | | | | | | 0.37E-12 | 1.00E-04 | 2.40E-01 | 0.37E-12 | 1.00E-04 | 2.40E-01 |
| Pu-239/240 | | | | | | 9.25E-00 | 0.00E-04 | 1.51E+00 | 9.25E-00 | 0.00E-04 | 1.51E+00 |
| Radium | | | | | | 3.33E-12 | 3.30E-00 | 7.40E-03 | 3.33E-12 | 3.30E-00 | 7.40E-03 |
| Ru-106 | | | | | | 1.51E-10 | 1.01E+00 | 2.30E+03 | 1.51E-10 | 1.01E+00 | 2.30E+03 |
| Sr-90 | | | | | | 5.76E-07 | 1.00E+02 | 3.63E+05 | 5.76E-07 | 1.00E+02 | 3.63E+05 |
| U-234 | | | | | | 2.56E-00 | 1.00E-05 | 3.63E-02 | 2.56E-00 | 1.00E-05 | 3.63E-02 |
| U-235 | | | | | | 1.00E-00 | 2.17E-00 | 4.93E-03 | 1.00E-00 | 2.17E-00 | 4.93E-03 |
| U-238 | | | | | | 3.30E-05 | 1.13E-05 | 7.57E-07 | 3.30E-05 | 1.13E-05 | 7.57E-02 |

Alternative C

Design Criteria
6.00E+01 mg/L of Hardness

| Chemical | Final Effluent Concentrations (ug/L) | Columbia River Concentrations (ug/L) | Effluent Limits Chronic (ug/L) | Effluent Limits Acute (ug/L) | Overall (DF) | Toxic Pounds Removed Factor | Toxic Pounds Removed (Lbs/yr) |
|---|---|---|---|---|---|---|---|
| **Inorganics** | | | | | | | |
| Ammonia (Total N) | 4.37E-02 | 6.00E+01 | 2.00E+03 | 1.85E+04 | 5.10E+03 | 4.48E-03 | 4.00E-03 |
| Ammonia | 2.18E-02 | | | | 1.37E+02 | | |
| Ammonium | 2.18E-02 | | | | 1.01E+04 | | |
| Aluminum | 5.35E-04 | | 5.00E+01 | | 7.10E+04 | 1.53E-01 | 2.32E-02 |
| Antimony | 1.27E-03 | | 1.60E+03 | 9.00E+03 | 1.10E+04 | 5.99E-03 | 3.35E-04 |
| Arsenic | 1.18E-03 | 1.20E+00 | 1.90E+02 | 3.60E+02 | 1.10E+04 | 7.06E-02 | 3.67E-03 |
| Barium | 8.00E-03 | 2.65E+01 | 1.00E+03 | | 1.30E+04 | 7.64E-03 | 3.15E-03 |
| Boron | 7.58E-03 | | | | 1.10E+04 | | 0.00E+00 |
| Cadmium | 2.31E-04 | | 7.59E-01 | 2.20E+00 | 1.30E+04 | 1.50E+01 | 1.60E-01 |
| Calcium | 2.28E+00 | 1.64E+04 | | | 1.00E+04 | | 0.00E+00 |
| Chloride | 2.60E-01 | 1.98E+03 | 2.50E+05 | | 1.00E+04 | 3.06E-05 | 3.18E-04 |
| Chromium | 1.18E-04 | | 1.10E+01 | 1.60E+01 | 5.10E+04 | 1.38E+00 | 3.31E-02 |
| Cobalt | 0.00E+00 | | | | | | 0.00E+00 |
| Copper | 1.30E-03 | | 7.64E+00 | 1.10E+01 | 2.30E+04 | 2.00E+00 | 2.39E-01 |
| Fluoride | 2.04E-02 | 1.00E+02 | 4.00E+03 | | 1.00E+04 | 1.91E-03 | 1.58E-03 |
| Iron | 1.03E-03 | 5.07E+01 | 1.00E+03 | | 1.73E+05 | 7.64E-03 | 5.47E-03 |
| Lead | 1.44E-03 | | 1.68E+00 | 4.26E+01 | 2.70E+04 | 4.66E+00 | 7.58E-01 |
| Magnesium | 6.81E-01 | 3.65E+03 | | | 1.00E+04 | | 0.00E+00 |
| Manganese | 2.90E-03 | 6.78E+00 | 5.00E+01 | | 3.00E+04 | 1.53E-01 | 5.31E-02 |
| Nickel | 7.50E-04 | 8.00E+00 | 1.02E+02 | 9.21E+02 | 1.20E+04 | 8.86E-02 | 3.11E-03 |
| Nitrate | 4.38E-02 | | 1.00E+04 | | 1.00E+04 | 7.64E-04 | 1.34E-03 |
| Phosphorous | 2.00E-03 | 2.00E+01 | | | 1.00E+04 | | 0.00E+00 |
| Potassium | 2.94E-01 | 6.41E+02 | | | 1.20E+04 | | 0.00E+00 |
| Selenium | 4.20E-03 | | 3.50E+01 | 2.60E+02 | 1.00E+04 | 2.60E-01 | 4.37E-02 |
| Silicon | 2.04E-02 | 1.84E+03 | | | 1.00E+05 | | 0.00E+00 |
| Silver | 4.17E-05 | | 1.20E-01 | 1.69E+00 | 1.20E+04 | 7.02E+01 | 1.40E-01 |
| Sodium | 7.54E+05 | 1.63E+03 | | | 2.61E-02 | | 0.00E+00 |
| Strontium | 7.94E-03 | 8.30E+01 | | | 1.10E+04 | | 0.00E+00 |
| Sulfate | 1.21E+00 | 9.78E+03 | 2.50E+05 | | 1.00E+04 | 3.06E-05 | 1.46E-03 |
| Uranium | 2.84E-05 | 8.08E-01 | | | 1.00E+05 | | 0.00E+00 |
| Vanadium | 6.10E-04 | | | | 1.00E+04 | | 0.00E+00 |
| Zinc | 5.50E-04 | 5.75E+00 | 6.88E+01 | 7.59E+01 | 2.20E+04 | 2.55E-01 | 1.24E-02 |
| Total Inorganics | 7.54E+05 | | | | 9.47E-02 | | |
| Total Cations (meq/L) | 3.28E+01 | | | | 6.23E-02 | | |
| Total Anions (meq/L) | -3.56E-05 | | | | 1.37E+04 | | |
| Charge Balance (%) | | | | | | | |
| Alkalinity (as CaCO3) | 4.31E+00 | 5.40E+04 | | | | | |
| pH (Dimensionless) | 7.00E+00 | 8.30E+00 | | | | | |
| Carbonate | 2.56E+06 | 6.00E+02 | | | | | |
| Bicarbonate | 0.00E+00 | 6.44E+04 | | | | | |
| TDS | 6.84E+04 | 6.94E+04 | | | 1.00E+00 | | |
| TSS | 3.30E+02 | 3.00E+03 | | | 9.10E+00 | | |
| Temperature (deg C) | | 1.86E+01 | | | | | |
| **Organics** | | | | | | | |
| Acetone | 1.33E+01 | | | | 1.30E+00 | | 0.00E+00 |
| 1-butanol | 3.62E+01 | | | | 1.00E+00 | | 0.00E+00 |
| 2-butanone | 2.91E+01 | | | | 1.00E+00 | | 0.00E+00 |
| BHT | 1.35E+01 | | | | 1.00E+00 | | 0.00E+00 |
| Hexone (MIBK) | 6.67E+00 | | | | 1.50E+00 | | 0.00E+00 |
| Toluene | 5.36E+00 | | 1.43E+04 | 1.75E+04 | 1.00E+00 | 1.16E-03 | 0.00E+00 |
| Trichloromethane | 5.19E+00 | | 1.24E+03 | 2.89E+04 | 1.00E+00 | 6.54E-03 | 0.00E+00 |
| Methylene Chloride | 0.00E+00 | | 5.00E+00 | | | 1.53E+00 | 0.00E+00 |
| Tetrachloroethene | 1.00E+00 | | 6.40E+02 | 5.28E+03 | 1.00E+00 | 1.12E-02 | 0.00E+00 |
| Total Organic Carbon | 6.60E+02 | 1.66E+03 | | | 1.00E+00 | | |
| Total Carbon | 1.19E+04 | 1.48E+04 | | | 1.00E+00 | | |
| Total Organic Halides | 2.42E+01 | 1.08E+02 | | | 1.00E+00 | | |
| **Radionuclides** | (pci/L) | (pci/L) | (pci/L) | | | | |
| Total Alpha | 4.99E-04 | 7.60E-01 | 3.00E-01 | | 1.00E+05 | | |
| Total Beta | 1.77E+02 | 9.60E-01 | 3.00E+01 | | 9.34E+03 | | |
| Am-241 | 7.03E-04 | | 3.00E+01 | | 1.00E+05 | 6.40E+05 | 5.26E-02 |
| Cm-242 | 4.93E-06 | | 1.00E+03 | | 1.00E+05 | 1.85E+07 | 1.10E-05 |
| Cm-244 | 6.92E-06 | | 6.00E+01 | | 1.00E+05 | 7.56E+06 | 3.33E-04 |
| Co-60 | 9.46E-02 | | 1.00E+04 | | 7.40E+04 | 6.33E+05 | 1.57E-02 |
| Cs-134 | 1.52E-01 | | 2.00E+03 | | 1.10E+04 | 3.64E+06 | 1.87E-02 |
| Cs-137 | 4.28E+01 | | 3.00E+03 | | 1.10E+04 | 3.15E+05 | 3.61E+00 |
| C-14 | 4.24E+01 | | 7.00E+04 | | 1.00E+00 | 3.57E+02 | 0.00E+00 |
| H-3 | 5.54E+06 | 3.74E+02 | 2.00E+06 | | 1.00E+00 | 2.71E+04 | 0.00E+00 |
| Mn-54 | 2.01E-01 | | 5.00E+04 | | 3.00E+04 | 6.69E+05 | 2.70E-03 |
| Pb-210 | 1.10E-03 | | 3.00E+01 | | 2.70E+04 | 1.43E+07 | 2.22E-02 |
| Pu-238 | 1.09E-04 | 1.32E-01 | 4.00E+01 | | 1.00E+05 | 2.40E+06 | 6.10E-03 |
| Pu-239/240 | 6.66E-04 | 7.00E-02 | 3.00E+01 | | 1.00E+05 | 1.34E+04 | 4.97E-02 |
| Radium | 3.30E-06 | 1.42E-01 | 1.00E+02 | | 1.00E+05 | 5.54E+04 | 7.39E-05 |
| Ru-106 | 1.01E+00 | | 6.00E+03 | | 1.70E+04 | 6.24E+06 | 6.42E-02 |
| Sr-90 | 1.60E+02 | 3.64E-01 | 1.00E+03 | | 1.10E+04 | 1.56E+06 | 3.94E+01 |
| U-234 | 1.60E-05 | | 5.00E+02 | | 1.00E+05 | 7.00E+01 | 7.16E-05 |
| U-235 | 2.17E-06 | | 6.00E+02 | | 1.00E+05 | 2.02E-02 | 6.10E-06 |
| U-238 | 1.13E-05 | | 6.00E+02 | | 1.00E+05 | 3.14E-03 | 4.22E-05 |
| | | | | Total Toxic Pounds Removed per Year | | | 43.15025 |

This page intentionally left blank.

# APPENDIX D

## DECONTAMINATION WASTEWATER RECYCLE SYSTEM TREATMENT EQUIPMENT SIZING AND SECONDARY WASTE CALCULATIONS

This page intentionally left blank.

# ALTERNATIVE D
# TREATMENT EQUIPMENT SIZING, AND SECONDARY WASTE CALCULATIONS

Appendix D consists of spreadsheets and tables that represent waste stream treatment calculations, treatment system equipment sizing calculations, and calculations of the secondary waste streams generated for the decontamination wastewater recycle system. Each spreadsheet typically presents one of these calculations for each specific unit or process in the treatment train.

The first table presented for each unit or process shows how the concentration of each contaminant is affected by the specific treatment unit or process. The concentrations in the stream exiting each treatment unit or process are calculated by dividing the contaminant concentrations entering the treatment unit/process by the decontamination factor (DF) noted on each table. Based on the concentrations and flow rates, the mass of the contaminant entering and exiting the unit or process is also presented. The mass of secondary wastes are noted by the difference between the influents and effluent masses.

Spreadsheets noting calculations of secondary wastes are attached following the treatment calculation spreadsheet for each specific treatment unit or process.

Spreadsheets showing sizing and general design calculations are presented for IX or GAC treatment units.

Assumptions for specific calculations are generally noted on each corresponding spreadsheet.

Design Water Recycle

**Design Criteria**
Filtration
Influent From Equalization Tank

1650 Flow Rate,GPM
K [HCO3==+H+=H2O] 0.3000E-10
K [HCO3==CO3] 5.0000E-11

400 Hours of Operation per Year
25,200,000 Gal/yr treated effluent

20 Flow Rate to IX Columns, GPM
1630 Flow Rate From Filter to Basin

**Design Basis**
Specific Activity

| | Sa(pCi/g) | Sa(g/mg) |
|---|---|---|
| Am-241 | 3.43E+00 | 3.43E+12 |
| Cm-242 | 3.31E+03 | 3.31E+15 |
| Cm-244 | 8.10E+01 | 8.10E+13 |
| Co-60 | 1.13E+03 | 1.13E+15 |
| Cs-134 | 1.30E+03 | 1.30E+15 |
| Cs-137 | 1.00E+02 | 1.00E+14 |
| C-14 | 4.46E+00 | 4.46E+12 |
| H-3 | 9.00E+03 | 9.00E+15 |
| Mn-54 | 7.70E+03 | 7.70E+15 |
| Pb-210 | 7.05E+01 | 7.05E+13 |
| Pu-238 | 1.71E+01 | 1.71E+13 |
| Pu-239/240 | 7.20E-02 | 7.20E+10 |
| Radium | 9.90E-01 | 9.90E+11 |
| Ru-106 | 6.00E+03 | 6.00E+15 |
| Sr-90 | 2.70E+02 | 2.70E+14 |
| U-234 | 6.25E-03 | 6.25E+09 |
| U-235 | 2.10E-06 | 2.10E+06 |
| U-238 | 3.30E-07 | 3.30E+05 |

| Chemical | Valence | Charge | | MWt | Cations (meq/L) | Anions (meq/L) | Concentrations (Pt. A) Entering Filtration (mg/L) | (Mol/L) | (lbs/hr) | (DF) | Concentrations Exiting Filtration Unit (Pt B) (mg/L) | (Mol/L) | (lbs/hr) | (Pt. C) Bottom (lbs/hr) |
|---|---|---|---|---|---|---|---|---|---|---|---|---|---|---|
| **Inorganics** | | | | | | | | | | | | | | |
| Ammonia (Total N) | | | | 18 | | | 2.23E+02 | 1.24E-05 | 1.17E-01 | 1 | 2.23E+02 | 1.24E-05 | 1.17E-01 | 0.00E+00 |
| Ammonia | | | | 17 | | | 3.00E+00 | 1.05-08 | 1.57E-03 | 1 | 3.00E+00 | 1.50E-08 | 1.57E-03 | 0.00E+00 |
| Ammonium | 1 | 1 | | 18 | 1.22E-02 | 0.00E+00 | 2.20E+02 | 1.24E-05 | 1.15E-01 | 1 | 2.20E+02 | 1.24E-05 | 1.15E-01 | 0.00E+00 |
| Aluminum | 3 | 1 | | 27 | 0.22E-01 | 0.00E+00 | 5.00E+03 | 2.07E-04 | 2.04E+00 | 10 | 5.00E+02 | 2.07E-05 | 2.04E-01 | 2.04E+00 |
| Antimony | 1 | 1 | | 121.75 | 0.00E+00 | 0.00E+00 | 0.00E+00 | 0.00E+00 | 0.00E+00 | 1 | 0.00E+00 | 0.00E+00 | 0.00E+00 | 0.00E+00 |
| Arsenic | 3 | 1 | | 74.9 | 0.00E+00 | 0.00E+00 | 0.00E+00 | 0.00E+00 | 0.00E+00 | 1 | 0.00E+00 | 0.00E+00 | 0.00E+00 | 0.00E+00 |
| Barium | 2 | 1 | | 137.30 | 2.51E-02 | 0.00E+00 | 1.72E+03 | 1.25E-05 | 9.02E-01 | 1 | 1.72E+03 | 1.25E-05 | 9.02E-01 | 0.00E+00 |
| Boron | 3 | 1 | | 10.80 | 2.22E-01 | 0.00E+00 | 0.34E+02 | 7.72E-05 | 4.30E-01 | 10 | 0.34E+01 | 7.72E-06 | 4.30E-02 | 3.94E-01 |
| Cadmium | 2 | 1 | | 112.40 | 5.34E-06 | 0.00E+00 | 3.00E+00 | 2.07E-08 | 1.57E-03 | 1 | 3.00E+00 | 2.07E-08 | 1.57E-03 | 0.00E+00 |
| Calcium | 2 | 1 | | 40.10 | 9.83E-01 | 0.00E+00 | 1.07E+04 | 4.01E-04 | 1.03E+01 | 1 | 1.07E+04 | 4.01E-04 | 1.03E+01 | 0.00E+00 |
| Chloride | 1 | | -1 | 35.50 | 0.00E+00 | -3.52E-02 | 1.25E+03 | 3.52E-05 | 0.50E-01 | 1 | 1.25E+03 | 3.52E-05 | 0.50E-01 | 0.00E+00 |
| Chromium | 2 | | -1 | 52 | 0.00E+00 | -2.31E-03 | 0.00E+01 | 1.15E-06 | 3.15E-02 | 10 | 0.00E+00 | 1.15E-07 | 3.15E-03 | 2.82E-02 |
| Cobalt | 2 | 1 | | 59 | 1.12E-03 | 0.00E+00 | 3.30E+01 | 5.59E-07 | 1.73E-02 | 10 | 3.30E+00 | 5.59E-08 | 1.73E-03 | 1.56E-02 |
| Copper | 2 | 1 | | 63.55 | 4.00E-03 | 0.00E+00 | 1.30E+02 | 2.05E-06 | 0.82E-02 | 10 | 1.30E+01 | 2.05E-07 | 0.82E-03 | 8.14E-02 |
| Fluoride | 1 | | -1 | 20.10 | 0.00E+00 | -7.20E-03 | 2.04E+02 | 7.20E-06 | 1.07E-01 | 1 | 2.04E+02 | 7.20E-06 | 1.07E-01 | 0.00E+00 |
| Iron | 2 | 1 | | 55.80 | 1.25E+00 | 0.00E+00 | 3.50E+04 | 6.27E-04 | 1.04E+01 | 10 | 3.50E+03 | 6.27E-05 | 1.04E+00 | 1.05E+01 |
| Lead | 2 | 1 | | 207.2 | 3.70E-04 | 0.00E+00 | 3.00E+01 | 1.00E-07 | 2.05E-02 | 1 | 3.00E+01 | 1.00E-07 | 2.05E-02 | 0.00E+00 |
| Magnesium | 2 | 1 | | 24.30 | 4.53E-01 | 0.00E+00 | 5.20E+03 | 2.10E-04 | 2.70E+00 | 10 | 5.20E+02 | 2.10E-05 | 2.70E-01 | 2.40E+00 |
| Manganese | 2 | 1 | | 54.90 | 1.07E-03 | 0.00E+00 | 5.40E+01 | 9.84E-07 | 2.83E-02 | 10 | 5.40E+00 | 9.84E-08 | 2.83E-03 | 2.55E-02 |
| Nickel | 2 | 1 | | 58.7 | 3.07E-03 | 0.00E+00 | 9.00E+01 | 1.53E-06 | 4.72E-02 | 10 | 9.00E+00 | 1.53E-07 | 4.72E-03 | 4.25E-02 |
| Nitrate | 1 | | -1 | 62.00 | 0.00E+00 | -7.00E-03 | 4.20E+02 | 7.00E-06 | 2.20E-01 | 1 | 4.20E+02 | 7.00E-06 | 2.20E-01 | 0.00E+00 |
| Phosphorous | 3 | | -1 | 30.97 | 0.00E+00 | -1.04E-03 | 2.00E+01 | 0.40E-07 | 1.05E-02 | 1 | 2.00E+01 | 0.40E-07 | 1.05E-02 | 0.00E+00 |
| Potassium | 1 | 1 | | 39.10 | 1.07E-02 | 0.00E+00 | 7.00E+02 | 1.07E-05 | 4.03E-01 | 1 | 7.00E+02 | 1.07E-05 | 4.03E-01 | 0.00E+00 |
| Selenium | 2 | 1 | | 79 | 1.00E-02 | 0.00E+00 | 4.20E+02 | 5.32E-06 | 2.20E-01 | 10 | 4.20E+01 | 5.32E-07 | 2.20E-02 | 1.98E-01 |
| Silicon | 2 | | -1 | 28.10 | 0.00E+00 | -1.46E-02 | 2.04E+04 | 7.26E-04 | 1.07E+01 | 10 | 2.04E+03 | 7.26E-05 | 1.07E+00 | 0.03E+00 |
| Silver | 1 | 1 | | 107.9 | 4.63E-06 | 0.00E+00 | 5.00E-01 | 4.63E-06 | 2.62E-04 | 1 | 5.00E-01 | 4.63E-09 | 2.62E-04 | 0.00E+00 |
| Sodium | 1 | 1 | | 23.00 | 9.46E-02 | 0.00E+00 | 2.18E+03 | 9.46E-05 | 1.14E+00 | 1 | 2.18E+03 | 9.46E-05 | 1.14E+00 | 0.00E+00 |
| Strontium | 2 | 1 | | 87.60 | 1.00E-02 | 0.00E+00 | 0.73E+02 | 0.07E-06 | 4.50E-01 | 1 | 0.73E+02 | 0.07E-06 | 4.50E-01 | 0.00E+00 |
| Sulfate | 2 | | -1 | 96.00 | 0.00E+00 | -2.52E-01 | 1.21E+04 | 1.20E-04 | 0.36E+00 | 1 | 1.21E+04 | 1.20E-04 | 0.36E+00 | 0.00E+00 |
| Uranium | 2 | 1 | | 238.00 | 2.30E-04 | 0.00E+00 | 2.04E+01 | 1.10E-07 | 1.40E-02 | 10 | 2.04E+00 | 1.10E-08 | 1.40E-03 | 1.34E-02 |
| Vanadium | 2 | 1 | | 50.94 | 0.00E+00 | 0.00E+00 | 0.00E+00 | 0.00E+00 | 0.00E+00 | 1 | 0.00E+00 | 0.00E+00 | 0.00E+00 | 0.00E+00 |
| Zinc | 2 | 1 | | 65.40 | 6.67E-03 | 0.00E+00 | 2.10E+02 | 3.33E-06 | 1.14E-01 | 10 | 2.10E+01 | 3.33E-07 | 1.14E-02 | 1.83E-01 |
| SUM INORGANICS | | | | | | | 1.00E+05 | 2.70E-03 | 5.00E+01 | 2.317177 | 4.00E+04 | 1.02E-03 | 2.44E+01 | 3.22E+01 |
| Total Cations (meq/L) | | | | | | | 3.72E+00 | | | | 1.41E+00 | | | |
| Total Anions (meq/L) | | | | | | | -1.70E+00 | | | | -4.40E-01 | | | |
| Charge Balance (%) | | | | | | | NA | | | | 68.00% | | | |
| Alkalinity (as CaCO3) | | | | | | | 4.02E+04 | | | | 4.00E-02 | | | |
| pH (Dimensionless) | | | | | | | 7.30E+00 | | | | 7.30E+00 | | | |
| Carbonate | 2 | | -1 | 60 | | | 7.30E+01 | 1.20E-06 | 3.00E-02 | 0.000833 | 7.40E+01 | 1.23E-06 | 3.00E-02 | -0.47E+00 |
| Bicarbonate | 1 | | -1 | 61 | | | 5.00E+04 | 0.01E-04 | 3.07E+01 | 0.000833 | 5.00E+04 | 0.01E-04 | 3.07E+01 | -5.13E-03 |
| TDS | | | | | | | 4.00E+04 | | 2.44E+01 | 1 | 4.00E+04 | | 2.44E+01 | 0.00E+00 |
| TSS | | | | | | | 0.13E+04 | | 3.22E+01 | 10 | 0.13E+03 | | 3.22E+00 | 2.00E+01 |
| Temperature (deg C) | | | | | | | 1.05E+01 | | | | 1.05E+01 | | | |
| **Organics** | | | | | | | | | | | | | | |
| Acetone | | | | | | | 1.73E+01 | | 0.00E-03 | 1 | 1.73E+01 | | 0.00E-03 | 0.00E+00 |
| 1-butanol | | | | | | | 3.62E+01 | | 1.00E-02 | 1 | 3.62E+01 | | 1.00E-02 | 0.00E+00 |
| 2-butanone | | | | | | | 2.91E+01 | | 1.53E-02 | 1 | 2.91E+01 | | 1.53E-02 | 0.00E+00 |
| BHT | | | | | | | 1.35E+01 | | 7.00E-03 | 1 | 1.35E+01 | | 7.00E-03 | 0.00E+00 |
| Hexone (MIBK) | | | | | | | 1.03E+01 | | 5.40E-03 | 1 | 1.03E+01 | | 5.40E-03 | 0.00E+00 |
| Toluene | | | | | | | 5.30E+00 | | 2.01E-03 | 1 | 5.30E+00 | | 2.01E-03 | 0.00E+00 |
| Trichloromethane | | | | | | | 5.10E+00 | | 2.72E-03 | 1 | 5.10E+00 | | 2.72E-03 | 0.00E+00 |
| Methylene Chloride | | | | | | | | | | 1 | 0.00E+00 | | 0.00E+00 | 0.00E+00 |
| Tetrachloroethene | | | | | | | 1.00E+00 | | 5.25E-04 | 1 | 1.00E+00 | | 5.25E-04 | 0.00E+00 |
| Total Organic Carbon | | | | | | | 0.00E+02 | | 4.62E-01 | 1 | 0.00E+02 | | 4.62E-01 | 0.00E+00 |
| Total Carbon | | | | | | | 1.10E+04 | | 0.34E+00 | 1 | 1.10E+04 | | 0.34E+00 | 0.00E+00 |
| Total Organic Halides | | | | | | | 2.42E+01 | | 1.27E-02 | 1 | 2.42E+01 | | 1.27E-02 | 0.00E+00 |
| **Radionuclides** | | | | | | | (mg/L) | (pCi/L) | (pCi/hr) | (DF) | (mg/L) | (pCi/L) | (pCi/hr) | (pCi/hr) |
| Total Alpha | | | | | | | | 4.00E+02 | 1.10E+00 | 10 | | 4.00E+01 | 1.10E+07 | 1.07E+00 |
| Total Beta | | | | | | | | 1.05E+07 | 3.03E+12 | 1 | | 1.05E+07 | 3.03E+12 | 0.00E+00 |
| Am-241 | | | | | | | 2.05E-04 | 7.03E+02 | 1.00E+00 | 10 | 2.05E-05 | 7.03E+01 | 1.00E+07 | 1.51E+00 |
| Cm-242 | | | | | | | 1.40E-00 | 4.03E+00 | 1.10E+06 | 10 | 1.40E-10 | 4.03E-01 | 1.10E+05 | 1.00E+00 |
| Cm-244 | | | | | | | 1.10E-07 | 0.02E+00 | 2.13E+06 | 10 | 1.10E-08 | 0.02E-01 | 2.13E+05 | 1.01E+06 |
| Co-60 | | | | | | | 0.10E-05 | 7.00E+04 | 1.07E+10 | 10 | 0.10E-06 | 7.00E+03 | 1.07E+09 | 1.50E+10 |
| Cs-134 | | | | | | | 1.20E-05 | 1.07E+04 | 3.00E+09 | 1 | 1.20E-05 | 1.07E+04 | 3.00E+09 | 0.00E+00 |
| Cs-137 | | | | | | | 2.70E-02 | 4.71E+00 | 1.12E+12 | 1 | 2.70E-02 | 4.71E+00 | 1.12E+12 | 0.00E+00 |
| C-14 | | | | | | | 9.50E-05 | 4.24E+02 | 1.01E+08 | 1 | 9.50E-05 | 4.24E+02 | 1.01E+08 | 0.00E+00 |
| H-3 | | | | | | | 2.07E-03 | 2.00E+07 | 4.77E+12 | 1 | 2.07E-03 | 2.00E+07 | 4.77E+12 | 0.00E+00 |
| Mn-54 | | | | | | | 7.70E-06 | 6.04E+04 | 1.44E+10 | 10 | 7.70E-07 | 6.04E+03 | 1.44E+09 | 1.30E+10 |
| Pb-210 | | | | | | | 3.00E-06 | 2.97E+02 | 7.00E+07 | 10 | 3.00E-07 | 2.97E+01 | 7.00E+06 | 6.37E+07 |
| Pu-238 | | | | | | | 0.37E-04 | 1.00E+02 | 2.00E+07 | 10 | 0.37E-07 | 1.00E+01 | 2.00E+06 | 2.34E+07 |
| Pu-239/240 | | | | | | | 0.25E-03 | 6.66E+02 | 1.50E+08 | 10 | 0.25E-04 | 0.00E+01 | 1.50E+07 | 1.43E+08 |
| Radium | | | | | | | 3.33E-06 | 3.30E+00 | 7.07E+05 | 10 | 3.33E-07 | 3.30E-01 | 7.07E+04 | 7.00E+05 |
| Ru-106 | | | | | | | 2.57E-05 | 1.72E+05 | 4.10E+10 | 1 | 2.57E-05 | 1.72E+05 | 4.10E+10 | 0.00E+00 |
| Sr-90 | | | | | | | 0.33E-02 | 1.70E+07 | 4.20E+12 | 1 | 0.33E-02 | 1.70E+07 | 4.20E+12 | 0.00E+00 |
| U-234 | | | | | | | 2.50E-03 | 1.00E+01 | 3.02E+06 | 10 | 2.50E-04 | 1.00E+00 | 3.02E+05 | 3.43E+06 |
| U-235 | | | | | | | 1.00E+00 | 2.17E+00 | 5.17E+06 | 10 | 1.00E-01 | 2.17E-01 | 5.17E+04 | 4.00E+05 |
| U-238 | | | | | | | 3.30E+01 | 1.13E+01 | 2.00E+06 | 10 | 3.30E+00 | 1.13E+00 | 2.00E+05 | 2.43E+06 |

| | | |
|---|---|---|
| Secondary Waste Volumes | | |
| Decon Water Recycle | | |
| Filtration | | |
| Assume: | 5.22E-05 | Gal sludge/Gal water processed |
| | 0.1818 | Gal sludge/Gal slurried wastes |
| | 25,200,000 | Gal/yr effluent |
| Will Generate | | |
| Sludge | 1,316 | Gal/yr |
| Unstabilized Wastes | 7,239 | Gal/yr |
| Assume: | 1 | lb cement/lb solid slurry to stabilize |
| | 94 | lb/ft3 dry Portland cement density |
| | 0.996 | settled sludge density |
| Settled Sludge | 10,486 | lbs |
| Portland Cement Required | 112 | ft3 per year |
| Stabilized Volume | 287 | ft3 per year |
| Number of Drums of Stabilized Product | 39 | drums/year |

Dacon Water Recycle

Design Criteria
Ion Exchange

Influent From Filter
3% Flow Bitte, GPM
K [NH4=>NH4+O]
K [HCO3=>CO3]

6.38E-10
5.80E-11

10 Max Service Flow, GPM/ft2 (Vendor Data)
1.75 Min Service Flow, GPM/ft2 (Vendor Data)
24 Minimum IX Run Time, Hours
400,000 Total Volume Treated, Gal/Yr

Assume Strong Acid Followed by Weak Base

1 Pair of IX Columns in Series

Conversions
Specific Activity

| | Bq/(g) | Bq/(pcg) |
|---|---|---|
| Am-241 | 3.43E+00 | 3.43E+12 |
| Cm-242 | 3.31E+03 | 3.31E+15 |
| Cm-244 | 8.10E+01 | 8.10E+13 |
| Co-60 | 1.13E+03 | 1.13E+15 |
| Cs-134 | 1.30E+03 | 1.30E+15 |
| Cs-137 | 1.00E+02 | 1.00E+14 |
| C-14 | 4.46E+00 | 4.46E+12 |
| H-3 | 9.00E+03 | 9.00E+15 |
| Mn-54 | 7.70E+03 | 7.70E+15 |
| Pb-210 | 7.06E+01 | 7.06E+13 |
| Pu-238 | 1.71E+01 | 1.71E+13 |
| Pu-239/240 | 7.20E-02 | 7.20E+10 |
| Radium | 9.00E-01 | 9.00E+11 |
| Ru-106 | 6.00E+03 | 6.00E+15 |
| Sr-90 | 2.70E+02 | 2.70E+14 |
| U-234 | 6.25E-03 | 6.25E+09 |
| U-235 | 2.16E-06 | 2.16E+06 |
| U-238 | 3.36E-07 | 3.36E+05 |

| Chemical | Valence | Chg | MW | Cations (meq/L) | Anions (meq/L) | Point B Concentrations Entering Ion Exchange From Filter (mg/L) | (Mol/L) | (Lbs/Hr) | DF Resul Assumed | Point E Concentrations Exiting Ion Exchange (mg/L) | (Mol/L) | Point G IX Column Load (Lbs/Hr) | (Lbs/Hr) |
|---|---|---|---|---|---|---|---|---|---|---|---|---|---|
| **Inorganics** | | | | | | | | | | | | | |
| Ammonia (Total N) | | | 18 | | | 2.23E+02 | 1.24E-05 | 2.23E-03 | | 2.20E+00 | 1.22E-07 | 2.20E-05 | 2.21E-03 |
| Ammonia | | | 17 | | | 3.00E+00 | 1.76E-07 | 3.00E-05 | | 0.00E+00 | 0.00E+00 | 0.00E+00 | 3.00E-05 |
| Ammonium | 1 | 1 | 18 | 1.22E-02 | 0.00E+00 | 2.20E+02 | 1.22E-05 | 2.20E-03 | 100 | 2.20E+00 | 1.22E-07 | 2.20E-05 | 2.18E-03 |
| Aluminum | 3 | 1 | 27 | 6.22E-02 | 0.00E+00 | 5.00E+02 | 2.07E-05 | 5.00E-03 | 100 | 5.00E+00 | 2.07E-07 | 5.00E-05 | 5.56E-03 |
| Antimony | 1 | 1 | 121.75 | 0.00E+00 | 0.00E+00 | 0.00E+00 | 0.00E+00 | 0.00E+00 | 100 | 0.00E+00 | 0.00E+00 | 0.00E+00 | 0.00E+00 |
| Arsenic | 3 | 1 | 74.9 | 0.00E+00 | 0.00E+00 | 0.00E+00 | 0.00E+00 | 0.00E+00 | 100 | 0.00E+00 | 0.00E+00 | 0.00E+00 | 0.00E+00 |
| Barium | 2 | 1 | 137.33 | [illegible] | 0.00E+00 | 1.72E+01 | [illegible] | 1.72E-07 | 100 | 1.72E+01 | 1.25E-07 | 1.72E-04 | 1.78E-02 |
| Boron | 3 | 1 | 10.80 | 2.32E-02 | 0.00E+00 | 9.34E+01 | 7.72E-04 | 9.34E-04 | 100 | 0.34E-01 | 7.72E-08 | 0.34E-06 | 0.20E-04 |
| Cadmium | 2 | 1 | 112.40 | 5.34E-05 | 0.00E+00 | 3.00E+00 | 2.67E-08 | 3.00E-06 | 100 | 3.00E-02 | 2.67E-10 | 3.00E-07 | 2.97E-05 |
| Calcium | 2 | 1 | 40.10 | 9.83E-01 | 0.00E+00 | 1.97E+04 | 4.91E-04 | 1.97E-01 | 100 | 1.97E+02 | 4.91E-06 | 1.97E-03 | 1.95E-01 |
| Chloride | 1 | -1 | 35.50 | 0.00E+00 | -3.52E-02 | 1.25E+03 | 3.52E-05 | 1.25E-02 | 100 | 1.25E+01 | 3.52E-07 | 1.25E-04 | 1.24E-02 |
| Chromium | 2 | -1 | 52 | 0.00E+00 | -2.31E-04 | 0.00E+00 | 1.15E-07 | 0.00E-05 | 100 | 0.00E-02 | 1.15E-09 | 0.00E-07 | 5.94E-05 |
| Cobalt | 2 | 1 | 59 | 1.12E-04 | 0.00E+00 | 3.30E+00 | 5.59E-08 | 3.30E-05 | 100 | 3.30E-02 | 5.59E-10 | 3.30E-07 | 3.27E-05 |
| Copper | 2 | 1 | 63.55 | 4.00E-04 | 0.00E+00 | 1.30E+01 | 2.05E-07 | 1.30E-04 | 100 | 1.30E-01 | 2.05E-09 | 1.30E-06 | 1.29E-04 |
| Fluoride | 1 | -1 | 20.10 | 0.00E+00 | -7.20E-03 | 2.04E+02 | 7.20E-06 | 2.04E-03 | 100 | 2.04E+00 | 7.20E-08 | 2.04E-05 | 2.02E-03 |
| Iron | 2 | 1 | 55.80 | 1.25E-01 | 0.00E+00 | 3.50E+03 | 6.27E-05 | 3.50E-02 | 100 | 3.50E+01 | 6.27E-07 | 3.50E-04 | 3.47E-02 |
| Lead | 2 | 1 | 207.2 | 3.74E-04 | 0.00E+00 | 3.00E+01 | 1.00E-07 | 3.00E-04 | 100 | 3.00E-01 | 1.00E-09 | 3.00E-06 | 3.00E-04 |
| Magnesium | 2 | 1 | 24.30 | 4.32E-02 | 0.00E+00 | 5.30E+02 | 2.18E-05 | 5.30E-03 | 100 | 5.30E+00 | 2.18E-07 | 5.30E-05 | 5.21E-03 |
| Manganese | 2 | 1 | 54.90 | 1.67E-04 | 0.00E+00 | 5.40E+00 | 9.84E-08 | 5.40E-05 | 100 | 5.40E-02 | 9.84E-10 | 5.40E-07 | 5.35E-05 |
| Nickel | 2 | 1 | 58.7 | 3.87E-04 | 0.00E+00 | 9.00E+00 | 1.53E-07 | 9.00E-05 | 100 | 9.00E-02 | 1.53E-09 | 9.00E-07 | 8.91E-05 |
| Nitrate | 1 | -1 | 62.00 | 0.00E+00 | -7.04E-03 | 4.30E+02 | 7.00E-06 | 4.30E-03 | 100 | 4.30E+00 | 7.00E-08 | 4.30E-05 | 4.24E-03 |
| Phosphorous | 3 | -1 | 30.97 | 0.00E+00 | -1.04E-03 | 2.00E+01 | 6.46E-07 | 2.00E-04 | 100 | 2.00E-01 | 6.46E-09 | 2.00E-06 | 1.98E-04 |
| Potassium | 1 | 1 | 39.10 | 1.97E-02 | 0.00E+00 | 7.00E+02 | 1.97E-05 | 7.00E-03 | 100 | 7.00E+00 | 1.97E-07 | 7.00E-05 | 7.02E-03 |
| Selenium | 2 | 1 | 79 | 1.06E-03 | 0.00E+00 | 4.20E+01 | 5.32E-07 | 4.20E-04 | 100 | 4.20E-01 | 5.32E-09 | 4.20E-06 | 4.16E-04 |
| Silicon | 2 | -1 | 28.10 | 0.00E+00 | -1.46E-01 | 2.04E+03 | 7.26E-05 | 2.04E-02 | 100 | 2.04E+01 | 7.26E-07 | 2.04E-04 | 2.02E-02 |
| Silver | 1 | 1 | 107.9 | 4.63E-06 | 0.00E+00 | 5.00E-01 | 4.63E-08 | 5.00E-06 | 100 | 5.00E-03 | 4.63E-11 | 5.00E-08 | 4.95E-06 |
| Sodium | 1 | 1 | 23.00 | 9.46E-02 | 0.00E+00 | 2.18E+03 | 9.46E-05 | 2.18E-02 | 50 | 4.36E+01 | 1.89E-06 | 4.36E-04 | 2.13E-02 |
| Strontium | 2 | 1 | 87.60 | 1.06E-02 | 0.00E+00 | 8.73E+02 | 9.97E-06 | 8.73E-03 | 100 | 8.73E+00 | 9.97E-08 | 8.73E-05 | 8.65E-03 |
| Sulfate | 2 | -1 | 96.00 | 0.00E+00 | -2.52E-01 | 1.21E+04 | 1.26E-04 | 1.21E-01 | 100 | 1.21E+02 | 1.26E-06 | 1.21E-03 | 1.20E-01 |
| Uranium | 2 | 1 | 238.00 | 2.39E-05 | 0.00E+00 | 2.84E+00 | 1.19E-08 | 2.84E-05 | 100 | 2.84E-02 | 1.19E-10 | 2.84E-07 | 2.81E-05 |
| Vanadium | 2 | 1 | 50.94 | 0.00E+00 | 0.00E+00 | 0.00E+00 | 0.00E+00 | 0.00E+00 | 100 | 0.00E+00 | 0.00E+00 | 0.00E+00 | 0.00E+00 |
| Zinc | 2 | 1 | 65.40 | 6.67E-04 | 0.00E+00 | 2.18E+01 | 3.33E-07 | 2.18E-04 | 100 | 2.18E-01 | 3.33E-09 | 2.18E-06 | 2.16E-04 |
| Total Inorganics | | | | | | 4.00E+04 | 1.02E-03 | 4.00E-01 | | 4.07E+02 | 1.11E-05 | 4.07E-03 | 4.01E-01 |
| Total Cations (meq/L) | | | | | | 1.41E+00 | | | | 1.51E-02 | | | |
| Total Anions (meq/L) | | | | | | -4.40E-01 | | | | -4.40E-03 | | | |
| Charge Balance (%) | | | | | | NA | | | | 99.95% | | | |
| Alkalinity (as CaCO3) | | | | | | 4.00E-02 | | | | 0.00E+00 | | | |
| pH (Unnecessarilness) | | | | | | 7.30E+00 | | | | 3.30E+00 | | | |
| Carbonate | 2 | -1 | 60 | | -1.40E+05 | 7.40E+01 | 1.23E-00 | 7.40E-04 | | 0.00E+00 | 0.00E+00 | 0.00E+00 | 7.40E-04 |
| Bicarbonate | 1 | -1 | 61 | | -6.00E+07 | 5.00E+04 | 9.81E-04 | 5.00E-01 | | 0.00E+00 | 0.00E+00 | 0.00E+00 | 5.00E-01 |
| TDS | | | | | | 4.00E+04 | | 4.00E-01 | 100 | 4.00E+02 | | 4.00E-03 | 4.00E-01 |
| TSS | | | | | | 6.13E+03 | | 6.13E-02 | 1 | 6.13E+03 | | 6.13E-02 | 6.10E-02 |
| Temperature (deg C) | | | | | | 1.05E+01 | | | | 1.05E+01 | | | |
| **Organics** | | | | | | | | | | | | | |
| Acetone | | | | | | 1.73E+01 | | 1.73E-04 | 1 | 1.73E+01 | | 1.73E-04 | 0.00E+00 |
| 1-butanol | | | | | | 3.62E+01 | | 3.62E-04 | 1 | 3.62E+01 | | 3.62E-04 | 0.00E+00 |
| 2-butanone | | | | | | 2.91E+01 | | 2.91E-04 | 1 | 2.91E+01 | | 2.91E-04 | 0.00E+00 |
| BHT | | | | | | 1.35E+01 | | 1.35E-04 | 1 | 1.35E+01 | | 1.35E-04 | 0.00E+00 |
| Hexane (MIBK) | | | | | | 1.63E+01 | | 1.63E-04 | 1 | 1.63E+01 | | 1.63E-04 | 0.00E+00 |
| Toluene | | | | | | 5.30E+00 | | 5.30E-05 | 1 | 5.30E+00 | | 5.30E-05 | 0.00E+00 |
| Trichloromethane | | | | | | 5.10E+00 | | 5.10E-05 | 1 | 5.10E+00 | | 5.10E-05 | 0.00E+00 |
| Methylene Chloride | | | | | | 0.00E+00 | | 0.00E+00 | 1 | 0.00E+00 | | 0.00E+00 | 0.00E+00 |
| Tetrachloroethene | | | | | | 1.00E+00 | | 1.00E-05 | 1 | 1.00E+00 | | 1.00E-05 | 0.00E+00 |
| Total Organic Carbon | | | | | | 0.00E+02 | | 0.00E-03 | 1 | 0.00E+02 | | 0.00E-03 | 0.00E+00 |
| Total Carbon | | | | | | 1.10E+04 | | 1.10E-01 | 1 | 1.10E+04 | | 1.10E-01 | 0.00E+00 |
| Total Organic Halides | | | | | | 2.42E+01 | | 2.42E-04 | 1 | 2.42E+01 | | 2.42E-04 | 0.00E+00 |
| **Radionuclides** | | | | | | (mg/L) | (pci/L) | (pci/Hr) | | (mg/L) | (pci/L) | (pci/Hr) | (pci/Hr) |
| Total Alpha | | | | | | | 4.00E+01 | 1.10E+07 | 100 | | 4.00E-01 | 2.27E+03 | 1.10E+07 |
| Total Beta | | | | | | | 1.05E+07 | 3.03E+12 | 71 | | 2.33E+05 | 1.00E+00 | |
| Am-241 | | | | | | 2.05E-05 | 7.03E+01 | 3.10E+05 | 100 | 2.04E-05 | 7.03E-01 | 3.10E+03 | 3.10E+05 |
| Cm-242 | | | | | | 1.40E-10 | 4.83E-01 | 2.24E+03 | 100 | 5.05E-07 | 4.83E-03 | 2.24E+01 | 2.22E+03 |
| Cm-244 | | | | | | 1.10E-00 | 0.92E-01 | 4.05E+03 | 100 | 5.21E-03 | 0.92E-03 | 4.05E+01 | 4.01E+03 |
| Co-60 | | | | | | 0.10E-00 | 7.00E+03 | 3.10E+07 | 100 | 3.75E-07 | 7.00E+01 | 3.10E+05 | 3.15E+07 |
| Cs-134 | | | | | | 1.20E-05 | 1.07E+04 | 7.50E+07 | 10 | 1.54E-02 | 1.07E+03 | 7.50E+00 | 6.83E+07 |
| Cs-137 | | | | | | 2.70E-02 | 4.71E+00 | 2.14E+10 | 10 | 3.57E-07 | 4.71E-05 | 2.14E+00 | 1.93E+10 |
| C-14 | | | | | | 9.50E-06 | 4.24E+02 | 1.92E+06 | 1 | 0.04E-08 | 4.24E+02 | 1.92E+06 | -1.14E-13 |
| H-3 | | | | | | 2.07E-03 | 2.00E+07 | 9.00E+10 | 1 | 1.13E-11 | 2.00E+07 | 9.00E+10 | 0.00E+00 |
| Mn-54 | | | | | | 7.70E-07 | 6.04E+03 | 2.74E+07 | 100 | 0.50E-11 | 6.04E+01 | 2.74E+05 | 2.72E+07 |
| Pb-210 | | | | | | 3.00E-07 | 2.97E+01 | 1.35E+05 | 100 | 4.32E-11 | 2.97E-01 | 1.35E+03 | 1.34E+05 |
| Pu-238 | | | | | | 0.37E-07 | 1.00E+01 | 4.55E+04 | 100 | 1.00E-04 | 1.00E-01 | 4.55E+02 | 4.50E+04 |
| Pu-239/240 | | | | | | 9.25E-04 | 0.04E+01 | 3.02E+05 | 100 | 2.44E+00 | 0.04E-01 | 3.02E+03 | 2.99E+05 |
| Radium | | | | | | 3.33E-07 | 3.30E-01 | 1.50E+03 | 100 | 1.62E-08 | 3.30E-03 | 1.50E+01 | 1.48E+03 |
| Ru-106 | | | | | | 2.57E-05 | 1.72E+05 | 7.81E+08 | 100 | 3.34E-13 | 1.72E+03 | 7.81E+06 | 7.73E+08 |
| Sr-90 | | | | | | 0.33E-02 | 1.70E+07 | 7.90E+10 | 100 | 4.00E-11 | 1.70E+05 | 7.90E+08 | 7.91E+10 |
| U-234 | | | | | | 2.50E-04 | 1.00E+00 | 7.27E+03 | 100 | 0.00E-06 | 1.00E-02 | 7.27E+01 | 7.19E+03 |
| U-235 | | | | | | 1.00E-01 | 2.17E-01 | 9.00E+02 | 100 | 0.00E+00 | 2.17E-03 | 0.00E+00 | 9.70E+02 |
| U-238 | | | | | | 3.30E+00 | 1.13E+00 | 5.13E+03 | 100 | 0.00E+00 | 1.13E-07 | 5.13E+01 | 5.08E+03 |

Design Calculations for Ion Exchange System
Decon Water Recycle

Influent and Effluent Composition

| | Cations | Anions |
|---|---|---|
| Influent | 1.411317 meq/L | 0.448983 meq/L |
| Effluent | 0.015059 meq/L | 0.00449 meq/L |
| Removed | 1.396258 meq/L | 0.444493 meq/L |

Strong Acid Resin Capacity

| | | |
|---|---|---|
| % Sodium | 6.700495 % | Using Culligan Water Company Tables |
| % Alkalinity | 99.74827 % | Capacity 37792.21 meq/ft3 |

Weak Base Resin Capacity

Using Culligan Water Company Tables
Capacity 27272.73 meq/ft3

Column Sizing Calculations

| | | |
|---|---|---|
| Strong Acid Resin Usage | 0.00028 ft3/gal | (assume 50% safety factor) |
| | 134.2457 ft3/yr | |
| Weak Base Resin Usage | 0.000123 ft3/gal | (assume 50% safety factor) |
| | 59.22068 ft3/yr | |
| Strong Acid Column Minimum Size | 8.054745 ft3 | |
| Weak Base Column Minimum Size | 3.553241 ft3 | |
| Chosen SA Size | 13 ft3 | |
| Chosen WB Size | 11 ft3 | |
| Minimum Column Diameter | 1.595767 ft | |
| Maximum Column Diameter | 3.814613 ft | |
| Chosen Size | 1.666667 ft | |

Regeneration Waste

| | |
|---|---|
| Strong Acid Column | 1363.96 Gal/Regen |
| | 14085.06 Gal/Year |
| Weak Base Column | 526.46 Gal/Regen |
| | 2834.302 Gal/Year |

Regeneration Time (SA Column) 9.91902 Hrs/Regen

Regeneration Calculations

Chemicals

| | |
|---|---|
| $H_2SO_4$ | 2 wt% |
| NaOH | 4 wt% |

Backwash+Rinse 4 Bed Volumes Each Column

| | |
|---|---|
| Volume | 388.96 Gal/Column |
| Flowrate | 5 gpm/ft2 |
| Duration | 169.7162 min |

Regeneration

SA Column 12 #$H_2SO_4$/ft3

| | |
|---|---|
| Volume | 975 Gal/Column |
| Flowrate | 5 gpm/ft2 |
| Duration | 425.425 min |

WB Column 4 #NaOH/ft3

| | |
|---|---|
| Volume | 137.5 Gal/Column |
| Flowrate | 5 gpm/ft2 |
| Duration | 59.99583 min |

This page intentionally left blank.

# APPENDIX E

## SHUTDOWN EFFLUENT SOURCES
## (AS PROVIDED BY WESTINGHOUSE HANFORD)

This page intentionally left blank.

SHUTDOWN EFFLUENT SOURCES
March 1992

Effluent sources resulting from Shutdown execution activities have been summarized into five categories:

1) Draining and decontamination of a) Pits/Sumps, b) Fuel Basins, and c) Basin Hardware decontamination.

2) Zone Reduction decontamination.

3) Miscellaneous sources.

4) Reactor Test Loop at D Area.

5) D Reactor water, Roof leaks.

Following is a discussion of each.

## Item 1.Draining and decontamination of Pits and Sumps, Fuel Basin, and Basin Hardware Decontamination

Effluent streams generated from the sources in this category comprise over 65% of the total liquid effluent streams anticipated. Effluent disposition from pits and sumps, i.e. primarily the lift station and Emergency Dump Basin, are closely linked to Basin Decontamination and draining and will require a scheduled draining sequence to accommodate limited water storage. To provide the reader with a clear understanding of how this interrelationship exists, some background information on the lift station and on the basin cleanup plan is provided.

The lift station is the low point radioactive drain pump well for the reactor complex building and is adjacent to the fuel storage basin. It is a steel lined concrete structure equipped with pumping capabilities to move its storage contents to the 1325N (Crib).

The lift station will hold - 100,000 gals if allowed to fill to capacity but is operated to the height of the steel liner which is 14'. This equates to -54,000 gals. To date the level is - 9' - 4" (-45,000 gals).

Major cleanup water sources such as the fuel basin, C & D elevator pits, all terminate at the lift station. It is assumed to be the natural point of effluent handling for the major clean-up effort at N. The basins, pits, well, and piping, hold approximately 1.5 million gals.

It is estimated that underground drain lines leading to the lift station, and the 36" pump discharge line leading from, contain - 85,000 gals. This water is essentially dormant. No pumping action to the 1325N crib has been done since 4/91. The water contaminated in the piping is anticipated to be used to maintain emergency dump basin and pool level due to evaporation. This lift station well and discharge pipe is also used as a reservoir to protect against unplanned spillage, and the need to discharge to the crib.

Coordination/sequencing between lift station water disposition and basin draining will be required to accommodate lift station capacity and avoid release to the 1325N crib until the BAT is installed.

Basin cleanup involves removal and decontamination of basin hardware (fuel spacers, fuel storage cubicals, process tubes, and miscellaneous debris), draining basin water,and cleaning and stabilizing contaminated basin surfaces to prevent resuspension of radioactive particulates into the air.

Figure 1 is a plan view of the N Basin and associated pits. Together, they hold over 1.5M gallons of contaminated water requiring processing. With reference to this figure, the N Reactor Shutdown Program Plan identifies the following cleanup sequence:

- Move equipment and material from the Discharge/Viewing pit to the main basin and isolate the area between Zone 1 (innermost Zone surrounding the reactor core) and Zone 3 (basin area) by adding an imperiable seal in the cart tunnel and viewing pit area. After the two zones are isolated in FY-94, Discharge pit water (96,000 gallons) will be transferred to the lift station. Surface stabilization will not be required since the entire pit will now be in Zone 1 thus requiring disposition of existing water first. The timing end actual volumes transferred to the lift station prior to implement of the BAT is subject to potential evaporate rates in EDB and fuel basins.

- Hardware in the Examination Facility will be moved to the main basin for disposal. Sediments will be moved to the main basin from the Examination Facility by means of a filtered underwater vacuum system such that inspection for SNM may be accomplished. The opening to the South Storage Basin will be sealed and the Examination Facility will henceforth be used as a repository for all sediments moved from other areas of the N Basins. Because of this, Examination Facility surfaces will not be cleaned or stabilized and water will not be drained until the sediment removal activity is completed in early FY-99.

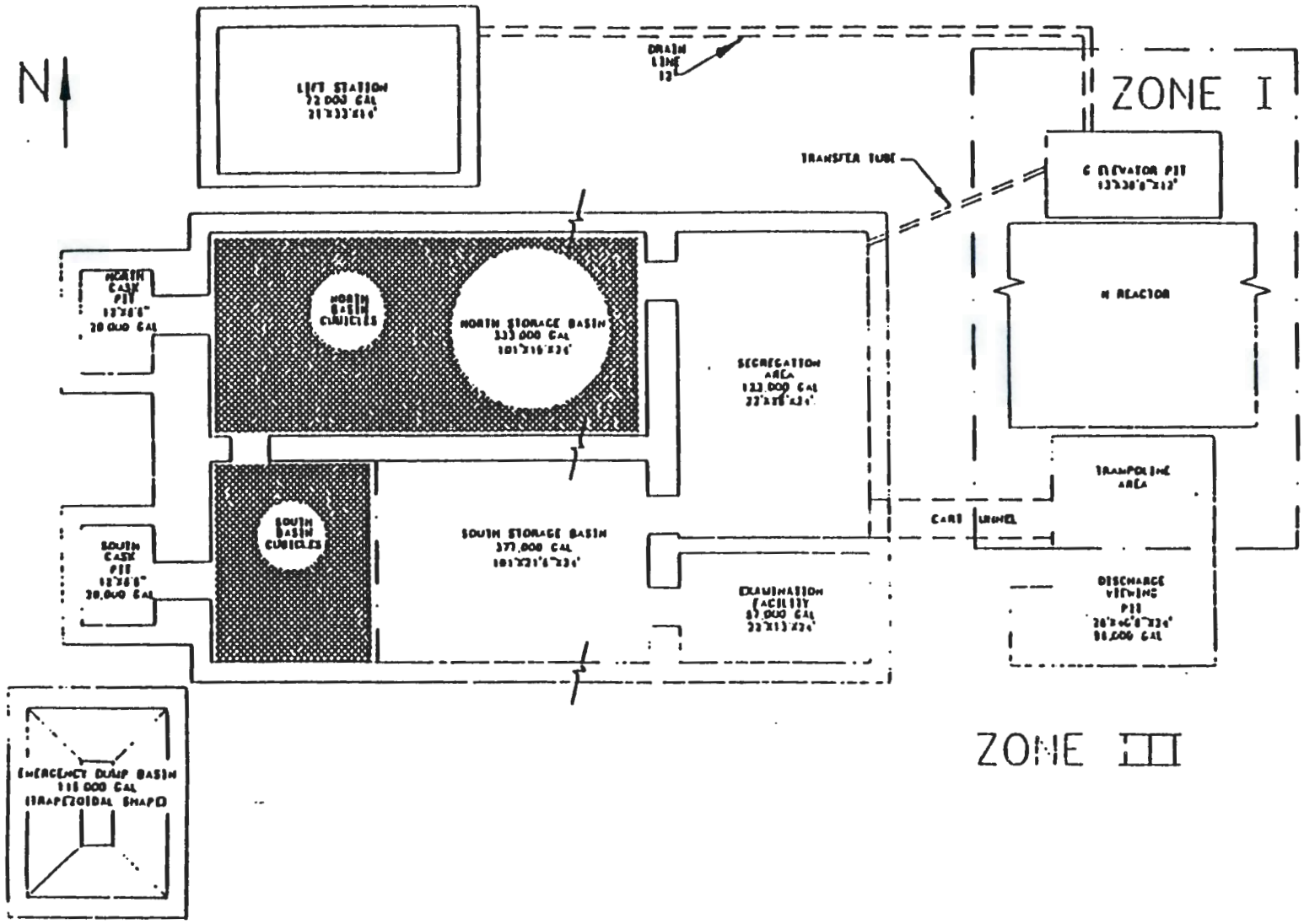


# PLAN VIEW - N BASIN

- Hardware will be moved from the Segregation Area to the main basins for disposal by FY-96. The openings to the North and South Storage Basins will be sealed and sediments then moved to the Examination Facility also in FY-96. The Segregation Area surfaces will be cleaned and stabilized as the 122,000 gal. of water is drained to the main basins in FY-96. To accommodate this additional water, basin water will be discharged to the lift station, which in turn, will require prior reduction or treatment by BAT. The area will be inspected to certify that all SNM has been removed.

  The Segregation Area will then be used as a dry repository for the concrete panels which form the cubicles in the North and South Storage Basins. The cubicle panels will be lifted from the main basin, cleaned and stabilized using either processed or new makeup water, and stored dry in the Segregation Area (FY-97). Approximately 1100 gallons of water will be required to perform cubical decon work. (The estimate basis assumes 10 minutes to decon each of the 4500 cubicals using a 20 gallon/minute spray.) Discussions with HSFP representatives indicate that it is more cost effective to remove and dispose of the cubicle panels with the balance of the 100N concrete structures during decommissioning rather than disposing of them during these shutdown operations.

- At this point the North and South Storage Basins and North and South Cask Pits have been isolated from the other pits, and have been accumulating hardware and sediments from those pits. Hardware removal, which is planned to proceed in parallel with earlier activities (FY 95 & 96), will be completed. Sediments will be transferred to the Examination Facility. The basin surfaces will be cleaned and stabilized with clean water as the water is drained. Removal of basin water (333,000 gal. in North Basin and 377,000 gal. in South Basin and 40,000 in cash pits) and surface stabilization (1.6m gallons) is schedule to occur in FY-97 thru FY-98. Stabilization estimates are based on a 45%-of-volume adder for decon work.

- Hardware from the "C" Elevator Pit will not be removed under the Shutdown Program due to ALARA concerns, and as such, will be part of decommissioning activities. Water from the pit (50,000 gal.)will be removed in FY-97 after residual materials have been removed or relocated. Since the "C" Elevator Pit is in Zone 1, surfaces will not be cleaned or stabilized.

Item 2 Zone Reduction Decontamination

Most decontamination of radiation zones will occur in FY-94 thru FY-97 of the Shutdown program. Current estimates, based on historical knowledge, call for approximately 400K gallons of water to be utilized per year from FY 94-FY-96.

Item 3 Miscellaneous Sources

Miscellaneous Sources include equipment cooling water required to meet routine compliance operations, unplanned Fire Water usage and piping leaks from the potable and fire systems, and contaminated drains for safety and decon showers and sinks. Utilizing measured data, an average rate of 1/10 gallon/minute from miscellaneous sources was derived. This adds up to an additional 100k gal/year to the lift station.

Item 4 D Area Test Loop and Trampoline Facility

D Area facilities house various N Reactor test mockups. Included are the High Pressure loop and associated sump which contain approximately 5,000 gallons of contaminated water, and about 40,000 gallons in the Trampoline Facility (capacity of 250,000). The Trampoline facility is kept with a minimum level of water to maintain the structural integrity of the supporting walls.

Item 5 Reactor Water, Roof Leaks

The 185D facility, which houses the High Pressure Test loop is known to leak water into the loop sump from rainwater. An allowance of 5,000 gals. per year was added to the effluent source estimates to account for removal.

## Estimate Basis

Attachment 2 and 3 itemize the projected effluent flows by fiscal year. Estimates are based on holding capacities of basins, sumps, and piping with a 20%-of-volume adder for decon activities where applicable. (This was doubled for North and South basin work to accommodate for expected high contamination areas.) Zone reduction estimates were calculated using a 20 gallon/minute stream times the expected usage per shift. Miscellaneous effluent stream flow is based on historical standby data with an average of 1/10 gallon/minute flow to the lift station.

3-9-92 CJG

typing4.jw

# ESTIMATED EFFLUENT COMPOSITION BY SOURCE IN 1,000 GALLONS

| | 1992 | 1993 | 1994 | 1995 | 1996 | 1997 | 1998 | 1999 |
|---|---|---|---|---|---|---|---|---|
| Draining and Decon of | | | | | | | | |
| Pits and Sumps | 150 | | 120 | | | 120 | 60 | 120 |
| Fuel Basin | | | | | 150 | 600 | 1,000 | |
| Basin Hardware Decon | | | 150 | 150 | | 1,100 | | |
| Zone Decon | | | 400 | 400 | 400 | | | |
| Miscellaneous | | 100 | 100 | 100 | 100 | 100 | 100 | 100 |
| D Reactor Test Loop | | | 45 | | | | | |
| D Reactor Water, roof leaks | 5 | 5 | 5 | 5 | 5 | 5 | 5 | 5 |
| TOTAL | 155 | 105 | 820 | 655 | 655 | 1,925 | 1,165 | 225 |
| CUMULATIVE | 155 | 260 | 1,080 | 1,735 | 2,390 | 4,315 | 5,480 | 5,705 |

# N Reactor Liquid Effluent Projection

## THOUSANDS OF GALLONS

| | 1992 | 1993 | 1994 | 1995 | 1996 | 1997 | 1998 | 1999 |
|---|---|---|---|---|---|---|---|---|
| | Buried Piping 150 | Draining | 109N & MISC. Sumps 120 | Cease Discharges to Crib (TPA) | | | | Drain & Stabilize Lift Station 60 |
| | | | | | | | Drain & Stabilize EDB 140 | |
| | | | Rad Zone Reduction 400 | 400 | 400 | | | |
| | | | | | | Drain & Stabilize North & South Basin 550 | 920 | |
| | | | Drain & Stabilize 100-D Test Loop & Trapoline Facil. 45 | | | | | |
| | | | | | | Drain & Stabilize D Elev. Pit 120 | | |
| | | | | | | | | Exam Pit 60 |
| | | | | | Drain & Stabilize Seg Pit 150 | | | |
| | | | Basin Hardware Removal 150 | 150 | | Transfer Cubicles to Sec Pit 1100 | | |
| | | | Drain Lift Station | | | Transfer C Elev. Pit to Lift Station 50 | | |
| | | Disposition Miscellaneous N Effluent Streams 100 | 100 | 100 | 100 | 100 | 100 | 100 |
| | | | | | Disposition 100-D Sump Inventories | | | |
| | 5 | 5 | 5 | 5 | 5 | 5 | 5 | 5 |
| TOTAL | 155 | 105 | 820 | 655 | 655 | 1925 | 1165 | 225 = 5,705 |

# APPENDIX F

## APPLICATION OF THE BEST AVAILABLE TECHNOLOGY PROCEDURE TO THE N REACTOR WASTEWATER

This page intentionally left blank.

# APPLICATION OF THE BEST AVAILABLE TECHNOLOGY PROCEDURE TO THE N REACTOR WASTEWATER

The following sections describe the steps taken to apply the procedure outlined in Section 4.1 to determine BAT for the N Reactor wastewater. Sections F.1 through F.5 relate to steps 1 through 5 of the procedure, respectively.

## F.1 Step 1: N Reactor Wastewater Characterization

The first step in the BAT selection procedure involves assembling all relevant wastewater characterization data. Results of that effort are presented in Sections 1 and 2 of this report.

## F.2 Step 2: Effluent Guidelines Method

The second step in the BAT process relies on federal and state guidelines to determine effluent limits for a given wastewater stream. Completion of this portion of the BAT process is documented in Section 3.3 of this report. No clearly applicable federal effluent guidelines which could establish BAT by themselves were identified.

## F.3 Step 3: Technology Transfer Method

The technology transfer method for determining BAT requires the identification of streams which are nearly identical to the N Reactor wastewater that are being successfully treated at other sites. If one or more such treatment applications are identified, it is likely that similar treatment technologies may be used and that the established effluent limitations may be adapted for N Reactor. Differing state regulations, however, must be accounted for when utilizing technology transfer to determine BAT.

A national consensus standard has been developed by the American Nuclear Society (ANS) and the American National Standards Institute (ANSI) that addresses the design of wastewater treatment facilities for nuclear reactors. This standard, *American National Standard for Liquid Radioactive Waste Processing System for Light Water Reactor Plants*, ANSI/ANS-55.6-1976, identifies recommended processes for the treatment of several types of reactor wastes, including decontamination and floor drain wastes. For streams like the N Reactor wastewater, filtration followed by IX, or evaporation followed by IX, is recommended. The standard also provides information on average DFs which can be expected for these unit operations.

Although useful for identifying potential treatment technologies for the N Reactor wastewater, this ANSI/ANS standard is not in itself sufficient to establish BAT. Fuel basin wastewater is specifically excluded from the sources covered by the standard. In most commercial reactor facilities, fuel storage basin water is treated and recycled, with only a small stream of treated water being "bled" off to prevent contaminant buildup. Additionally,

the focus of the standard is radionuclide treatment. Although the recommended technologies are effective in removing suspended and dissolved solids in general in addition to radionuclides, they are not effective for removing organics. Therefore, BAT for the N Reactor wastewater cannot be established through the technology transfer method.

## F.4 Step 4: Treatability Studies Method

The treatability studies method may be used to identify BAT when neither effluent guidelines nor technology transfer is applicable. This method utilizes treatability study results to suggest control options which may be BAT. Use of this method is possible if either of the two following conditions are met:

- A level of treated effluent quality has been accepted for discharge by regulatory agencies
- Current control practices establish a pattern of control efficiency (i.e., percentage removal) or treatment intensity (i.e., number and type of treatment steps).

The first of these conditions does not apply, as recent permits for discharges sufficiently similar to the N Reactor wastewater have not been issued to a federal facility by EPA in Washington State.

While there is no definite trend in control efforts for waste stream types similar to the N Reactor wastewater, the radionuclide treatment systems recommended under ANSI/ANS standards do provide a basis for further development using the generic treatment system method described below. Treatability tests performed in 1988 at the LETF pilot plant on N Reactor wastewater provide useful data for selecting and sizing treatment equipment for the current N Reactor wastewater stream. However, the focus of these studies was radionuclide removal; very little data on dissolved solids and organic removal efficiencies are available from the LETF pilot studies. Therefore, existing treatability data do not by themselves establish BAT for the N Reactor wastewater.

## F.5 Step 5: Generic Treatment Systems Method

As described in the preceding sections, technology transfer and treatability studies are not appropriate methods for determining BAT for treatment of N Reactor wastewater. Therefore, it was necessary to apply the generic treatment systems method.

The generic treatment systems method requires that alternative treatment processes be developed for the wastewater using selected common treatment technologies that appear applicable. The alternatives are then compared using criteria that reflect the cost, effectiveness, and implementability of each alternative; a recommended alternative is then selected.

The results of applying the generic treatment systems method are provided in Section 4 of this report. The procedure begins with a comparison of the

constituents present in the wastewater to effluent comparative levels developed from applicable state and federal regulations and standards; this comparison identifies general classes of constituents which must be treated.

The next step, as described in Section 4.2, involves identification and screening of potential treatment technologies. After the screening process is completed, candidate treatment alternatives are identified. Each of the candidates consists of a combination of the treatment technologies remaining for consideration after the screening process is completed. Those candidate alternatives are presented in Section 4.3.1.

Criteria used to evaluate each alternative are described in Section 4.3.2. Detailed evaluations of the candidate treatment alternatives are reported in Section 4.3.3., culminating in the selection of a recommended alternative in Section 4.4.

This page intentionally left blank.

# APPENDIX G

# OFFSITE DOSE CALCULATIONS

This page intentionally left blank.

## OFFSITE DOSE CALCULATIONS

The incremental contribution of the treated N Reactor effluent discharged to the Columbia River to the total offsite dose from the Hanford Site was calculated using estimated radionuclide concentrations in the treated effluent and total effluent volumes discharged. This appendix provides a summary of the method used to calculate the offsite dose projections and the results of the calculations.

Dose estimates have been calculated for two cases. The "average" case assumes that radionuclides are present in the treated N Reactor effluent at the concentrations provided in Table 4-5 for treated effluent from Alternative B. These concentrations are based upon 1991 data, and have not been corrected for radioactive decay over the operating life of the wastewater treatment system. On average, approximately 480,000 gal of treated effluent will be discharged to the Columbia River each year.

The "1998" case estimates the incremental offsite dose that will occur in the worst case year, when the discharge to the Columbia River will consist mainly of wastewater from draining the 105-N Fuel Basin. For this case, concentrations for all radionuclides with the exception of tritium in water from the 105-N Fuel Basin have been assumed to be an order of magnitude higher than those assumed for the average case. Tritium is assumed to be present at a concentration approximately 2.3 times that of the average case. These concentrations have then been corrected for radioactive decay that will take place between 1991 and 1998 using the following formula:

$$C_f = C_i \times e^{-(0.693 \times t)/\tau}$$

where:

$C_f$ = Concentration in 1998, in pCi/L
$C_i$ = Concentration in 1991, in pCi/L
$\tau$ = Radionuclide half-life, in years
$t$ = 7 yr.

In 1998, approximately 1.1 Mgal of treated effluent will be discharged to the Columbia River.

The contribution of each radionuclide to the offsite dose is calculated for each case using the following equation:

$$D_j = C \times F \times V \times (3.785 \times 10^{-12})$$

where:

$D_j$ = Dose contributed by the radionuclide, in mrem/yr
$C$ = Concentration, in pCi/L
$V$ = Total annual volume discharged, in gal
$F$ = Dose conversion factor, in mrem/Ci.

Dose conversion factors were obtained from the Westinghouse Hanford document *Facility Effluent Monitoring Plan Determinations for the 100 Area Facilities* (WHC 1991c).

The total offsite dose for each case was then calculated by adding together the contribution from each individual radionuclide. These calculations are summarized in Table G-1.

Table G-1. Estimated Offsite Exposures from all Radionuclides in N Reactor Treated Effluent.

| Radionuclide | Half Life (Yrs) | Conversion Factor (mrem/Ci) | Treated Effluent Concentrations Average (pCi/L) | Treated Effluent Concentrations 1998 (pCi/L)* | Resulting Offsite Dose by Radionuclide Average (mrem/yr) | Resulting Offsite Dose by Radionuclide 1998 (mrem/yr) |
|---|---|---|---|---|---|---|
| Am-241 | 433.00 | 2.00E-01 | 7.03E-04 | 6.95E-03 | 2.55E-10 | 5.79E-09 |
| Cm-242 | 0.45 | 1.00E+00 ** | 4.93E-06 | 9.57E-10 | 8.96E-12 | 3.99E-15 |
| Cm-244 | 0.05 | 1.00E+00 ** | 8.92E-06 | 3.09E-47 | 1.62E-11 | 1.28E-52 |
| Co-60 | 5.27 | 2.40E-03 | 9.46E-02 | 3.77E-01 | 4.12E-10 | 3.77E-09 |
| Cs-134 | 2.06 | 4.60E-01 | 1.52E-01 | 1.45E-01 | 1.27E-07 | 2.77E-07 |
| Cs-137 | 30.17 | 3.20E-01 | 4.28E+01 | 3.64E+02 | 2.49E-05 | 4.86E-04 |
| C-14 | 5730.00 | 1.00E+00 ** | 4.24E+01 | 4.24E+02 | 7.70E-05 | 1.76E-03 |
| H-3 | 12.33 | 6.40E-07 | 5.54E+06 | 3.74E+07 | 6.44E-06 | 9.96E-05 |
| Mn-54 | 0.85 | 6.60E-04 | 2.01E-01 | 6.90E-03 | 2.41E-10 | 1.89E-11 |
| Pb-210 | 22.30 | 1.00E+00 ** | 1.10E-03 | 8.85E-03 | 2.00E-09 | 3.68E-08 |
| Pu-238 | 87.75 | 9.50E-04 | 1.09E-04 | 1.03E-03 | 1.88E-13 | 4.08E-12 |
| Pu-239/240 | 24131.00 | 6.00E-03 | 6.66E-04 | 6.66E-03 | 7.26E-12 | 1.66E-10 |
| Radium *** | 5.76 | 1.00E+00 ** | 3.30E-06 | 1.42E-05 | 6.00E-12 | 5.92E-11 |
| Ru-106 | 1.01 | 1.60E-03 | 1.01E+00 | 8.24E-02 | 2.94E-09 | 5.49E-10 |
| Sr-90 | 28.60 | 6.10E-03 | 1.60E+02 | 1.35E+03 | 1.77E-06 | 3.43E-05 |
| U-234 | 2.44E+05 | 8.90E-04 | 1.60E-05 | 1.60E-04 | 2.59E-14 | 5.93E-13 |
| U-235 | 7.04E+08 | 9.60E-04 | 2.17E-06 | 2.17E-05 | 3.78E-15 | 8.67E-14 |
| U-238 | 4.47E+09 | 9.50E-04 | 1.13E-05 | 1.13E-04 | 1.95E-14 | 4.47E-13 |
| | | Volume Discharged | 4.80E+05 (gal) | 1.10E+06 (gal) | Total Dose 1.10E-04 (mrem/yr) | 2.38E-03 (mrem/yr) |

Dose Conversion Factors are as reported in WHC-EP-0439

* Decay Corrected

** Assumed; no data in WHC-EP-0439

*** Assumed to be Ra-228

This page intentionally left blank.

ORIGINAL

| Date Received: June ~~17~~, 1992 | 7/27/92 MB | INFORMATION RELEASE REQUEST | Reference: WHC-CM-3-4 |
|---|---|---|---|

**Complete for all Types of Release**

| Purpose | | ID Number (include revision, volume, etc.) |
|---|---|---|
| [] Speech or Presentation<br>[] Full Paper<br>[] Summary<br>[] Abstract<br>[] Visual Aid<br>[] Speakers Bureau<br>[] Poster Session<br>[] Videotape<br>(Check only one suffix) | [] Reference<br>[X] Technical Report<br>[] Thesis or Dissertation<br>[] Manual<br>[] Brochure/Flier<br>[] Software/Database<br>[] Controlled Document<br>[] Other | WHC-SD-NR-ES-014, REV. 0<br>List attachments.<br>Date Release Required<br>July 15, 1992 |

| Title | Unclassified Category | Impact Level |
|---|---|---|
| N-Reactor Wastewater Treatment System Summary Engineering Report | UC- | 3 QE |

New or novel (patentable) subject matter? [X] No [] Yes
If "Yes", has disclosure been submitted by WHC or other company?
[] No [] Yes Disclosure No(s).

Information received from others in confidence, such as proprietary data, trade secrets, and/or inventions?
[X] No [] Yes (Identify)

Copyrights? [X] No [] Yes
If "Yes", has written permission been granted?
[] No [] Yes (Attach Permission)

Trademarks?
[X] No [] Yes (Identify)

**Complete for Speech or Presentation**

| Title of Conference or Meeting | Group or Society Sponsoring |
|---|---|
| NA | NA |

| Date(s) of Conference or Meeting | City/State | Will proceedings be published? | Will material be handed out? |
|---|---|---|---|
| NA | NA | [] Yes [X] No | [] Yes [X] No |

Title of Journal
NA

**CHECKLIST FOR SIGNATORIES**

| Review Required per WHC-CM-3-4 | Yes | No | Reviewer - Signature Indicates Approval: Name (printed) | Signature | Date |
|---|---|---|---|---|---|
| Classification/Unclassified Controlled Nuclear Information | [X] | [] | RJ Pyzel | RJ Pyzel | 6-18-92 |
| Patent - General Counsel | [X] | [] | BD Williamson | BD Williamson | 7/1/92 |
| Legal - General Counsel | [X] | [] | BD Williamson | BD Williamson | 7/1/92 |
| Applied Technology/Export Controlled Information or International Program | [] | [X] | | | |
| WHC Program/Project | [X] | [] | JP Schmidt | JP Schmidt | 7/27/92 |
| Communications | [] | [X] | HR Trumble | HR Trumble | 7/24/92 |
| RL Program/Project | [X] | [] | SH Wisness | SH Wisness | 7/23/92 |
| Publication Services | [X] | [] | D.F. Washburn | Kathy Christensen for DF Washburn | 7/27/92 |
| Other Program/Project | [] | [X] | | | |

Information conforms to all applicable requirements. The above information is certified to be correct.

| | Yes | No |
|---|---|---|
| References Available to Intended Audience | [X] | [] |
| Transmit to DOE-HQ/Office of Scientific and Technical Information | [] | [X] |

Author/Requestor (Printed/Signature) Date
G.S. Hunacek Gerald S. Hunacek 6/16/92

Intended Audience
[] Internal [] Sponsor [X] External

Responsible Manager (Printed/Signature) Date
J.P. Schmidt JP Schmidt 7/22/92

**INFORMATION RELEASE ADMINISTRATION APPROVAL STAMP**

Stamp is required before release. Release is contingent upon resolution of mandatory comments.

APPROVED FOR RELEASE
OFFICIAL DOCUMENT
MB
Date 7/27/92

Date Cancelled | Date Disapproved

BD-7600-062 (08/91) WEF074

Part 1

JUL 27 1992 Sta. 7 (14)

# ENGINEERING DATA TRANSMITTAL



1. EDT 155512

| | | |
|---|---|---|
| 2. To: (Receiving Organization) Distribution | 3. From: (Originating Organization) Environmental Safety N Reactor | 4. Related EDT No.: 133059 NPDES Permit |
| 5. Proj./Prog./Dept./Div.: 100N Effluent Treatment 009 | 6. Cog. Engr.: G.S. Hunacek | 7. Purchase Order No.: NA |
| 8. Originator Remarks: Attached for your review before release to the public is The N-Reactor Wastewater Treatment System Summary Report. This has been reviewed by WHC and RL. Comments were incorporated. | | 9. Equip./Component No.: NA |
| | | 10. System/Bldg./Facility: 100N-Outfall #009 |
| 11. Receiver Remarks: Sign the EDT as concurrence and a final EDT will be prepared for all to sign. Return to Jerry Hunacek XO-41, 373-1673 by 24 June 1992. This is the final EDT for concurrence. | | 12. Major Assm. Dwg. No.: NA |
| | | 13. Permit/Permit Application No.: NA |
| | | 14. Required Response Date: June 24 1992 |

15. DATA TRANSMITTED

| (A) Item No. | (B) Document/Drawing No. | (C) Sheet No. | (D) Rev. No. | (E) Title or Description of Data Transmitted | (F) Impact Level | (G) Reason for Transmittal | (H) Originator Disposition | (I) Receiver Disposition |
|---|---|---|---|---|---|---|---|---|
| 1 | WHC-SD-NR-ES-~~14~~-014, REV. 0 | | 0 | N-Reactor Wastewater Treatment System Summary Engineering Report | 3 Q E | 1/~~3~~ 2 | 1/~~3~~ 2 | 1/~~3~~ |
| ~~[illegible]~~ | 7/27/92 | | ~~[illegible]~~ | | ~~[illegible]~~ | | 7/27/92 | |
| | | | | | | | | |
| | | | | | | | | |
| | | | | | | | | |
| | | | | | | | | |

16. KEY

| Impact Level (F) | Reason for Transmittal (G) | | Disposition (H) & (I) | |
|---|---|---|---|---|
| 1, 2, 3, or 4 (see MRP 5.43) | 1. Approval<br>2. Release<br>3. Information | 4. Review<br>5. Post-Review<br>6. Dist. (Receipt Acknow. Required) | 1. Approved<br>2. Approved w/comment<br>3. Disapproved w/comment | 4. Reviewed no/comment<br>5. Reviewed w/comment<br>6. Receipt acknowledged |

17. SIGNATURE/DISTRIBUTION (See Impact Level for required signatures)

| (G) Reason | (H) Disp. | (J) Name | (K) Signature | (L) Date | (M) MSIN | (J) Name | (K) Signature | (L) Date | (M) MSIN | (G) Reason | (H) Disp. |
|---|---|---|---|---|---|---|---|---|---|---|---|
| 1 | 1 | Cog.Eng. G.S. Hunacek | Gerald S. Hunacek | 6/22/92 | XO-41 | ~~L.E. Bernemen~~ | per telecon: Wants to be only on distrib | | | 3 | |
| 1 | 1 | Cog. Mgr. D.J. Watson | [illegible] | 6/18/92 | [illegible] | K.A. Gano | T.P. Zoric for K.A. Gano | 6-30-92 | XO-21 | 1 | 1 |
| 1 | 1 | QA. J.C. Plastino | J.C. Plastino | 6/23/92 | H4-58 | P.J. Mackey | Bev Williamson for P.J. Mackey | 6-25-92 | B3-15 | 1 | |
| 1 | 1 | T.H. Gronewald | T.H. Gronewald | 6/25/92 | X5-58 | R.J. Pyzel | [illegible] | 6-19-92 | XO-42 | 1 | 1 |
| 1 | 1 | Env. J.J Luke | J.J. Luke | 7-20-92 | H4-57 | J.P. Schmidt | [illegible] | 6-25-92 | XO-41 | 1 | 1 |
| 1 | 1 | K.S. Jensen | Kathy Jensen | 7/17/92 | H4-57 | H.L.Debban | H.L. Debban | 7-1-92 | XO-18 | 3 | |
| 1 | 1 | R.W. Oldham | R.W. Oldham | 7/17/92 | H4-57 | P.M. Olson | P.M. Olson | 7/1/92 | R3-45 | 1 | 1 |

| 18. | 19. | 20. | 21. DOE APPROVAL (if required) |
|---|---|---|---|
| Gerald S. Hunacek<br>G.S. Hunacek<br>Signature of EDT Originator — Date 6/16/92 | 7/1/92<br>D.J. Watson<br>Authorized Representative for Receiving Organization — Date | J.P. Schmidt<br>J.P. Schmidt<br>Cognizant/Project Engineer's Manager — Date 7-1-92 | Ltr. No.<br>[] Approved<br>[] Approved w/comments<br>[] Disapproved w/comments |