1240167
[0075149H]

RPP-RPT-30181, Rev. 0

# Retrieval Data Report for Single-Shell Tank 241-C-201

M. J. Galgoul
CH2M HILL Hanford Group, Inc.
Richland, WA 99352
U.S. Department of Energy Contract DE-AC27-99RL14047

RECEIVED
SEP 13 2016
EDMC

EDT/ECN: DRF
Cost Center: 7F500
B&R Code:
UC:
Charge Code:
Total Pages: 151

Key Words: waste, retrieval, residual, vacuum retrieval system C-201, 200-series tank, WMA C, technology, limit, HFFACO, TPA, M-45-00

Abstract: This report describes the retrieval of waste from SST 241-C-201, which is one of four 200-series SSTs constructed to store waste in Waste Management Area C. The DOE began retrieval of waste on October 25, 2005, and completed retrieval in compliance with Milestone M-45-00 and M-45-00B requirements on March 23, 2006. The limit of technology was reached for the configuration of the vacuum retrieval system as deployed.

TRADEMARK DISCLAIMER. Reference herein to any specific commercial product, process, or service by trade name, trademark, manufacturer, or otherwise, does not necessarily constitute or imply its endorsement, recommendation, or favoring by the United States Government or any agency thereof or its contractors or subcontractors.

Printed in the United States of America. To obtain copies of this document, contact: Document Control Services, P.O. Box 950, Mailstop H6-08, Richland WA 99352, Phone (509) 372-2420; Fax (509) 376-4989.

JUL 26 2006
DATE:
STA: 15
HANFORD RELEASE
ID:
65

SE. Bratton 7/26/06
Release Approval Date

Release Stamp

**Approved For Public Release**



149

RPP-RPT-30181
Revision 0

# RETRIEVAL DATA REPORT FOR SINGLE-SHELL TANK 241-C-201

Prepared by
M. J. Galgoul

Date Published
July 2006

CH2MHILL
Hanford Group, Inc.

P.O. Box 1500
Richland, Washington

Contractor for the U. S. Department of Energy
Office of River Protection under Contract DE-AC27-99RL14047

TRADEMARK DISCLAIMER. Reference herein to any specific commercial product, process, or service by trade name, trademark, manufacturer, or otherwise does not necessarily constitute or imply its endorsement, recommendation or favoring by the United States Government or any agency thereof or its contractors or subcontractors.

Printed in the United States of America. To obtain copies of this document, contract: Document Control Services P.O. Box 950, Mailstop H6-08, Richland, WA 99352, Phone (509) 372-2420; Fax (509) 376-4989

## EXECUTIVE SUMMARY

This Retrieval Data Report (RDR) presents data showing that single-shell tank 241-C-201 (SST C-201) has been retrieved to the limits of the vacuum retrieval system (VRS) technology and that tank waste residuals in SST C-201 do not exceed 30 $ft^3$. These achievements satisfy the tank waste retrieval criteria established by Milestones M-45-00 and M-45-00B of the *Hanford Federal Facility Agreement and Consent Order* (HFFACO). This RDR also summarizes the potential risk to human health from waste remaining in the tank, provides details on the VRS technology and its performance in the SST C-201 retrieval campaign, and describes measures taken to prevent and detect leaks during retrieval.

The SST C-201 retrieval campaign began October 25, 2005. SST C-201 was retrieved using a VRS, which used vacuum pumps to mobilize and remove waste from the tank. Use of this system minimized both the need to add water to the tank and the in-tank pooling of liquids. Removed waste was diluted with raw water and transferred to double-shell tank 241-AN-106 (DST AN-106).

On March 23, 2006, representatives of the U.S. Department of Energy (DOE) and CH2M HILL Hanford Group, Inc. (CH2M HILL) determined that the technical limit of the VRS to retrieve waste from SST C-201 had been reached and briefed the Washington State Department of Ecology. In determining that the capacity of the VRS to remove waste from SST C-201 had been reached, DOE and CH2M HILL relied on the following:

a. Examination of in-tank photos/videos to observe and record the waste surface contours, form, and characteristics.

b. Estimation of retrieval performance efficiency based on comparison of batch specific gravity measurements.

c. Use of retrieval performance data trends estimated from mass balances to demonstrate that a consistent pattern is present indicating that as much waste has been removed as possible.

Subsequent measurement of the residual waste in SST C-201 using topographical mapping and survey techniques in accordance with Attachment 1 to HFFACO Appendix H and RPP-23403, *Single-Shell Tank Component Closure Data Quality Objectives*, established that the volume of waste remaining in SST C-201 was 19.2 $ft^3$, with an upper bounding limit of 20.5 $ft^3$.

SST C-201 held approximately 115 $ft^3$ of waste at the start of retrieval. Based on the difference between the starting and ending volume estimates, approximately 94 $ft^3$ of waste were retrieved from SST C-201 and transferred to DST AN-106.

The SST C-201 leak detection, monitoring, and mitigation program used during retrieval focused on a mitigation strategy to control potential leaks. Based on the available data, there was no evidence of a tank leak occurring during SST C-201 retrieval operations.

The inventory of constituents in the SST C-201 residual waste was determined by laboratory analysis of waste samples taken prior to the start of retrieval. Sampling the post-retrieval residual waste was not possible because there was insufficient residual waste directly under a riser; therefore, as provided in RPP-16616, *Component Closure Action Data Quality Objectives for the C-200 Series Tanks*, results of the pre-retrieval samples were used to support the post-retrieval inventory calculation. To account for selective removal of soluble constituents and more easily suspended solids, concentrations of SST C-201 post-retrieval waste constituents were estimated by multiplying the pre-retrieval concentrations to the SST C-202 post-retrieval/pre-retrieval ratios. This is justified because SST C-201 and SST C-202 contained wastes that were generated by the same process and they contained similar constituents in the pre-retrieval samples from both tanks. The risk assessment for the residual waste in SST C-201 based on sampling analyses shows that the estimated Incremental Lifetime Cancer Risk, Hazard Index, all pathways farmer dose, and target organ dose are 2 to 4 orders of magnitude below the performance objectives prescribed for closure of the Waste Management Area C, which includes SST C-201. For all inadvertent intruder scenarios other than the suburban garden scenario (a sensitivity case) at 100 years after closure, the doses associated with SST C-201 were below performance objectives. For the suburban garden scenario at 100 years, the doses exceeded the performance objectives by a factor of 3 for the average inventory and factor of 4.5 for the upper confidence level (UCL) 95% inventory. At 500 years after closure, intruder scenario doses are below performance objectives for the average inventory but above the performance objective for the UCL 95% inventory.

DOE has no recommendations for additional retrieval actions at SST C-201 because Milestone M-45-00 retrieval criteria are satisfied, and retrieval is complete.

## TABLE OF CONTENTS

EXECUTIVE SUMMARY ..... iii

1.0 INTRODUCTION AND BACKGROUND ..... 1-1
1.1 PURPOSE ..... 1-1
1.2 HISTORY ..... 1-1
1.3 REGULATORY REQUIREMENTS ..... 1-2
1.4 PRE-RETRIEVAL CONDITIONS ..... 1-3
1.4.1 Single-Shell Tank C-201 Description ..... 1-3
1.4.2 Ancillary Equipment Providing Access to Single-Shell Tank C-201 ..... 1-3
1.4.3 Waste Description and Conditions ..... 1-3
1.5 DOCUMENT STRUCTURE ..... 1-6

2.0 RETRIEVAL SYSTEM DESCRIPTION ..... 2-1
2.1 BASIS ..... 2-1
2.2 OVERVIEW ..... 2-1
2.3 WASTE RETRIEVAL SYSTEM EQUIPMENT ..... 2-1
2.3.1 Articulating Mast System ..... 2-1
2.3.2 Vessel/Pump Skid ..... 2-3
2.3.3 Vacuum Skid ..... 2-3
2.3.4 Control Trailer ..... 2-4
2.3.5 Hose-in-Hose Transfer Line ..... 2-4
2.4 WASTE RETRIEVAL SYSTEM INSTRUMENTATION ..... 2-4
2.5 ENVIRONMENTAL CONTROLS ..... 2-5
2.5.1 Exhauster Operation ..... 2-5
2.5.2 Vacuum Routing ..... 2-5
2.5.3 Leak Detection, Monitoring, and Mitigation ..... 2-5
2.5.4 Walkdown of Aboveground Portions of the Tank System ..... 2-6
2.5.5 Secondary Containment ..... 2-6
2.6 WASTE RETRIEVAL CAMPAIGN CHRONOLOGY ..... 2-6

3.0 RETRIEVAL SYSTEM PERFORMANCE ..... 3-1
3.1 WASTE RETRIEVAL PROCESS DESCRIPTION ..... 3-1
3.2 WASTE RETRIEVAL TECHNOLOGY PERFORMANCE ..... 3-3
3.3 PREDICTED VERSUS ACTUAL TECHNOLOGY PERFORMANCE ..... 3-7
3.3.1 Water Use ..... 3-8
3.3.2 Waste Retrieval Rate ..... 3-10
3.3.3 Retrieval Time ..... 3-11
3.4 CONCLUSION ..... 3-12

4.0 LEAK DETECTION, MONITORING, AND MITIGATION ..... 4-1
4.1 REQUIREMENTS ..... 4-1
4.2 LEAK DETECTION AND MONITORING ..... 4-2
4.2.1 Single-Shell Tank C-201 ..... 4-2
4.2.2 Double-Shell Tank AN-106 ..... 4-3
4.2.3 Ancillary Equipment ..... 4-4

4.3 MITIGATION ..... 4-4
4.3.1 Single-Shell Tank C-201 ..... 4-4
4.3.2 Double-Shell Tank AN-106 ..... 4-5
4.3.3 Ancillary Equipment ..... 4-5
4.4 CONCLUSION ..... 4-6

5.0 LIMITS OF TECHNOLOGY ..... 5-1
5.1 IDENTIFYING LIMITS OF TECHNOLOGY ..... 5-1
5.2 DETERMINATION THAT AS MUCH WASTE WAS RETRIEVED AS POSSIBLE USING THE SELECTED TECHNOLOGY ..... 5-2
5.3 CONCLUSION ..... 5-8

6.0 SINGLE-SHELL TANK 241-C-201 RESIDUAL WASTE VOLUME MEASUREMENT ..... 6-1
6.1 RESIDUAL WASTE VOLUME MEASUREMENT PROCESS ..... 6-1
6.2 RESIDUAL WASTE VOLUME RESULTS ..... 6-3
6.3 CONCLUSION ..... 6-8

7.0 RESIDUAL TANK WASTE CHARACTERIZATION ..... 7-1
7.1 SAMPLING AND ANALYSIS OF RESIDUAL WASTE ..... 7-1
7.2 SAMPLING AT SST C-201 ..... 7-1
7.3 SAMPLE ANALYSES ..... 7-2
7.4 CALCULATION OF RESIDUAL INVENTORY ..... 7-2

8.0 POST-RETRIEVAL SINGLE-SHELL TANK 241-C-201 RISK ASSESSMENT ..... 8-1
8.1 CONSTITUENTS EVALUATED ..... 8-1
8.2 RESULTS FOR INDIVIDUAL CONTAMINANTS FOR POST-RETRIEVAL SINGLE-SHELL TANK 241-C-201 ..... 8-6
8.3 CUMULATIVE ANALYSIS RESULTS FOR TANK C-201 AND WASTE MANAGEMENT AREA C ..... 8-7
8.4 INADVERTENT INTRUDER ..... 8-11
8.5 SUMMARY ..... 8-13

9.0 ADDITIONAL RETRIEVAL TECHNOLOGIES ..... 9-1
9.1 FEASIBILITY AND VIABILITY OF OTHER AVAILABLE WASTE RETRIEVAL TECHNOLOGIES ..... 9-1
9.2 FEASIBILITY OF DEVELOPING NEW TECHNOLOGIES ..... 9-1
9.2.1 AEA Technology Power Fluidics™ ..... 9-2
9.2.2 Russian Pulsatile Mixer Pumps/Fluidic Retrieval Systems ..... 9-2
9.2.3 Small Mobile Retrieval Vehicles ..... 9-2
9.2.4 Tank Wall Washing at West Valley Demonstration Project ..... 9-3
9.2.5 Dry Ice Blasting ..... 9-3
9.3 ADDITIONAL WASTE REMOVAL ..... 9-3

10.0 RECOMMENDATIONS FOR FURTHER ACTIONS ..... 10-1
10.1 RECOMMENDATIONS FOR SINGLE-SHELL TANK C-201 ..... 10-1

10.2 IMPROVEMENTS IMPLEMENTED FOR SINGLE-SHELL TANK C-201 RETRIEVAL BASED ON LESSONS LEARNED FROM SINGLE-SHELL TANK C-202 RETRIEVAL ..... 10-1
10.3 OPPORTUNITIES FOR IMPROVEMENT OF WASTE RETRIEVAL OPERATIONS AT OTHER SINGLE-SHELL TANKS BASED ON LESSONS LEARNED FROM SINGLE-SHELL TANK C-201 ..... 10-2

11.0 REFERENCES ..... 11-1

## LIST OF APPENDIXES

APPENDIX A – SINGLE-SHELL TANK C-201 RESIDUAL WASTE CONCENTRATIONS AND INVENTORIES ..... A-1

APPENDIX B - IMPACTS ASSOCIATED WITH THE PRE-RETRIEVAL INVENTORY ..... B-1

APPENDIX C - IMPACTS ASSOCIATED WITH THE POST-RETRIEVAL INVENTORY ..... C-1

## LIST OF FIGURES

Figure 1-1. Profile View of C-200-Series Tank ..... 1-4
Figure 1-2. Configuration of Single-Shell Tank C-201 and Adjacent Facilities ..... 1-5
Figure 2-1. Vacuum Retrieval System Schematic. ..... 2-2
Figure 2-2. Articulating Mast System in a Single-Shell Tank. ..... 2-2
Figure 2-3. Vacuum Head on Articulating Mast System. ..... 2-3
Figure 3-1. C-200-Series Tanks Instrumentation Diagram. ..... 3-2
Figure 3-2. Residual Tank Waste Volume Trend During Retrieval Campaign per Operating Day. ..... 3-7
Figure 3-3. Daily Comparison of In-tank and Ex-tank Water. ..... 3-9
Figure 3-4. Daily In-tank Water Use. ..... 3-9
Figure 3-5. Proportion of In-tank and Ex-tank Water Use. ..... 3-10
Figure 3-6. Waste Retrieval Rate During Campaign. ..... 3-11
Figure 5-1. Limits of Technology Model. ..... 5-1
Figure 5-2. Location of Vacuum Retrieval System Positions (Manual Rotations). ..... 5-3
Figure 5-3. Single-Shell Tank 241-C-201 Overview of Tank Bottom. ..... 5-5
Figure 5-4. Single-Shell Tank 241-C-201 East Section of Tank Bottom. ..... 5-5
Figure 5-5. Single-Shell Tank 241-C-201 West Section of Tank Bottom. ..... 5-6

Figure 5-6. Waste Retrieval Performance: Slurry Specific Gravity by Batch. ..... 5-7

Figure 5-7. Waste Retrieval Progress. ..... 5-8

Figure 6-1. Single-Shell Tank 241-C-201 Section View Showing Camera Elevations Used in March 23, 2006, Video Recording. ..... 6-2

Figure 6-2. Single-Shell Tank 241-C-201 Post-Retrieval Tank Waste Contour Map. ..... 6-5

Figure 6-3. Single-Shell Tank 241-C-201 Post-Retrieval Tank Waste Digital Terrain Model. ..... 6-6

Figure 6-4. Single-Shell Tank 241-C-201 Bottom from Camera Elevation of Approximately 16 Feet on March 23, 2006. ..... 6-6

Figure 6-5. Single-Shell Tank 241-C-201 Bottom from Camera Elevation of Approximately 9 Feet on March 23, 2006. ..... 6-7

Figure 6-6. Single-Shell Tank 241-C-201 Bottom from Camera Elevation of Approximately 4 Feet on March 23, 2006. ..... 6-7

Figure 6-7. Single-Shell Tank 241-C-201 Wall from Camera Elevation of Approximately 16 ft on March 23, 2006. ..... 6-8

Figure 8-1. Single-Shell Tank C-201 Residual Waste Inventory and Risk Assessment Process. ..... 8-2

## LIST OF TABLES

Table 1-1. SST C-201 Pre-Retrieval Riser and Hatchway Descriptions. ..... 1-6

Table 1-2. Crosswalk of HFFACO Appendix I, Section 2.1.7, Requirements and Corresponding Retrieval Data Report Sections. ..... 1-7

Table 2-1. Chronology of the Single-Shell Tank 241-C-201 Waste Retrieval Campaign. (2 sheets) ..... 2-6

Table 3-1. Single-Shell Tank 241-C-201 Retrieval Process Flowmeter Summary. ..... 3-3

Table 3-2. Daily Volume Calculation Data. ..... 3-6

Table 3-3. System Performance Summary. ..... 3-8

Table 3-4. Water Use and Disposition. ..... 3-10

Table 4-1. Leak Detection and Monitoring Methods for Each Waste Retrieval System Component. ..... 4-2

Table 5-1. Retrieval Campaign Chronology During Manual Rotation of Arm. ..... 5-4

Table 6-1. Single-Shell Tank 241-C-201 Total Waste Volume and Component Waste Volumes. ..... 6-3

Table 6-2. Single-Shell Tank 241-C-201 Waste Volume in Tank Bottom. ..... 6-4

Table 7-1. SST C-201 Pre-Retrieval Sample Analysis Techniques. ..... 7-3

Table 8-1. List of Analytes and Available Toxicity Information. (4 sheets) ..... 8-3

Table 8-2. Estimated Maximum Incremental Lifetime Cancer Risk/Radiological Dose During the Modeling Period for Primary Radionuclides. ..... 8-8

Table 8-3. Estimated Maximum Value for Incremental Lifetime Cancer Risk and Hazard Quotient for the Primary Hazardous Chemicals. (2 sheets) ..... 8-9

Table 8-4. Cumulative Incremental Lifetime Cancer Risk, Hazard Index, and Radiological Drinking Water Dose from Peak Groundwater Concentration Related to Residual Waste Volume in Single-Shell Tank C-201 ..... 8-12

Table 8-5. Intruder Dose Summary for Single-Shell Tank C-201 ..... 8-13

Table 8-6. Comparison of HTWOS Predicted Inventory Used in DOE/ORP-2005-01 and the Nominal Post-Retrieval Inventory ..... 8-14

# LIST OF TERMS

## Abbreviations, Acronyms, and Initialisms

| | |
|---|---|
| AEA | *Atomic Energy Act of 1954* |
| APF | all pathways farmer |
| AMS | articulating mast system |
| BBI | best-basis inventory |
| CCMS | camera/computer-aided design modeling system |
| CCTV | closed-circuit television system |
| CFR | Code of Federal Regulations |
| CH2M HILL | CH2M HILL Hanford Group, Inc. |
| COPC | constituents of potential concern |
| DOE | Department of Energy |
| DQO | data quality objectives |
| DST | double-shell tank |
| Ecology | Washington State Department of Ecology |
| EPA | U.S. Environmental Protection Agency |
| HFFACO | *Hanford Federal Facility Agreement and Consent Order* |
| HI | Hazard Index |
| HIHTL | hose-in-hose transfer line |
| HTWOS | Hanford Tank Waste Operations Simulator |
| HVAC | heating, ventilation, and air conditioning |
| ILCR | incremental lifetime cancer risk |
| ITV | in-tank vehicle |
| LDMM | leak detection, monitoring, and mitigation |
| MBD | Material Balance Discrepancy |
| MCL | maximum contaminant level |
| MLDUA | modified light duty utility arm |
| MRS | mobile retrieval system |
| PA | performance assessment |
| PUREX | plutonium-uranium extraction |
| RDR | Retrieval Data Report |
| SpG | specific gravity |
| SST | single-shell tank |
| SST C-201 | single-shell tank 241-C-201 |
| 3-D | three dimensional |
| TSR | Technical Safety Requirements |
| TWINS | Tank Waste Information Network System |
| TWRWP | Tank Waste Retrieval Work Plan |
| UCL | upper confidence level |
| VRS | vacuum retrieval system |
| WAC | Washington Administrative Code |
| WMA | Waste Management Area |
| WUF | waste unaccounted for |

**Units**

| | |
|---|---|
| Ci | curie |
| $ft^3$ | cubic foot |
| ft | foot |
| g | gram |
| gal | gallon |
| in. | inch |
| kg | kilogram |
| L | liter |
| mL | milliliter |
| mrem | millirem |
| pCi | picocurie |
| scfm | standard cubic feet per minute |
| yr | year |
| µCi | microcurie |
| µg | microgram |

# 1.0 INTRODUCTION AND BACKGROUND

*Hanford Federal Facility Agreement and Consent Order* (HFFACO) (Ecology et al. 1989), Milestone M-45-00 requires the U.S. Department of Energy (DOE) to retrieve waste from all single-shell tanks (SST) at the Hanford Site. This report describes the retrieval of waste from SST 241-C-201 (SST C-201), which is one of four 200-series SSTs constructed to store waste in Waste Management Area C (WMA C). These tanks are collectively referred to as the C-200-series tanks. The DOE began retrieving waste from SST C-201 on October 25, 2005, and completed retrieval operations in compliance with Milestone M-45-00 requirements on March 23, 2006.

Note that source, special nuclear material, and byproduct materials, as defined in the *Atomic Energy Act of 1954* (AEA), as amended, are regulated at DOE facilities exclusively by DOE acting pursuant to its AEA authority. DOE asserts that, under the AEA, it has sole and exclusive responsibility and authority to regulate source, special nuclear, and byproduct materials at DOE-owned facilities. To the extent this retrieval data report (RDR) provides data or discussions about materials regulated by the AEA, that information is provided for informational purposes only.

## 1.1 PURPOSE

This RDR provides information required by Section 2.1.7 of Appendix I to the HFFACO. The report documents the SST C-201 pre-retrieval sampling and analysis of the waste, the retrieval campaign, waste retrieval system performance, and post-retrieval activities including the residual waste volume determination. This report describes the performance of the retrieval system used to remove waste from SST C-201, presents data confirming that the amount of waste removed meets Milestone M-45-00 retrieval criteria, and summarizes the potential risk to human health posed by the waste remaining in the tank.

## 1.2 HISTORY

Construction of SST C-201 was completed in 1944. The tank was placed in service in 1947, receiving metal waste from the B Plant bismuth phosphate process through January 1948. Metal waste supernate was removed from SST C-201 in 1953 in preparation for sluicing the metal waste solids in the tank. The metal waste solids were sluiced, a visual inspection was conducted, and in March 1954, the tank was declared empty. (RPP-15408, *Origin of Wastes in C-200 Series Single-Shell Tanks*).

From May 1955 to November 1955, SST C-201 received Hot Semi-Works facility radioactive waste generated from plutonium-uranium extraction (PUREX) pilot plant studies. Most of the Hot Semi-Works waste, in the form of supernate, was removed in 1970. SST C-201 was removed from service in 1976 and interim stabilized in 1982 (RPP-15408).

Unexplained decreases in SST C-201 waste levels that totaled approximately 450 gal were noted in 1988. These decreases were assumed to have been associated with a leak, although no

unplanned release is associated with SST C-201 (HNF-EP-0182, *Waste Tank Summary Report for Month Ending September 30, 2005*).

## 1.3 REGULATORY REQUIREMENTS

Retrieval of waste from SST C-201 and submittal of this RDR are necessary requirements for closing the Hanford SST system. The HFFACO establishes volume and technology criteria for closing 200-series tanks, including SST C-201. HFFACO Milestone M-45-00 provides in part:

> Closure will follow retrieval of as much tank waste as technically possible, with tank waste residues not to exceed ... 30 $ft^3$ in each of the 200 series tanks, or the limit of waste retrieval technology capability, whichever is less. If the DOE believes that waste retrieval to these levels is not possible for a tank, then DOE will submit a detailed explanation to EPA and Ecology explaining why these levels cannot be achieved, and specifying the quantities of waste that the DOE proposes to leave in the tank. The request will be approved or disapproved by EPA and Ecology on a tank-by-tank basis.

Section 2.1.7 of Appendix I to the HFFACO Action Plan provides:

> **2.1.7 Retrieval Data Report/Appendix II Request for Exception**
>
> Once DOE has completed the retrieval actions described in the TWRWP, DOE will either complete and submit to Ecology within 120 days its retrieval data report, or a request for exception to retrieval criteria per Agreement Appendix H. The request for exception to retrieval criteria option is only applicable for SSTs and the requirements of that request are identified in Agreement Appendix H, Attachment 2.
>
> At a minimum, DOE's Retrieval Data Report will include:
>
> - Residual tank waste volume measurement, including associated calculations
> - The results of residual tank waste characterization
> - Retrieval technology performance documentation
> - DOE's updated post-retrieval risk assessment
> - Discussion of feasibility/viability of other available retrieval technologies, the feasibility of developing additional retrieval technologies, associated detailed cost estimates and amount of additional waste that could be removed
> - Opportunities and actions being taken to refine or develop tank waste retrieval technologies, based on lessons learned
> - LDMM monitoring and performance results
> - DOE's recommendation for further action and proposed schedule(s).
>
> Data from this report will be used by Washington State Department of Ecology (Ecology) and DOE in making WMA-, tank- and component-specific closure decisions. Single or multiple tank and component actions will be included in this report as appropriate.

## 1.4 PRE-RETRIEVAL CONDITIONS

This section summarizes the physical condition of SST C-201, the ancillary equipment used during waste retrieval, and the waste residing in the tank when retrieval began.

### 1.4.1 Single-Shell Tank C-201 Description

SST C-201 is 20 ft in diameter with a 24.5-ft operating depth, a 25.5-ft overall height, and an operating capacity of 7,352 $ft^3$. The structure consists of a carbon-steel liner inside a reinforced-concrete shell. In August 2003, a manual liquid level (ENRAF[1]) gauge was installed in SST C-201 as a liquid level indicator for waste volume estimates. Figure 1-1 presents a generalized profile view of a C-200-series tank.

The SST C-201 sidewall is a vertical cylinder. The tank knuckle region curves in from the sidewall and about 36 vertical in. down to the tank bottom. The tank bottom is shaped like a shallow dish; the dish sides slope very gradually down and in to the midpoint of the tank bottom. The middle of the dish is 6 in. deeper than the rim. The total volume of the bottom dish is approximately 43 $ft^3$. A weld line is visible when not covered by waste and joins plates below the rim. The portion of the tank bottom below the weld line has a volume of approximately 35 $ft^3$. A single stiffener ring is located at the top of the steel liner at 25 ft 6 in. above the bottom of the tank. Internal tank dimensions are documented in CVI-73550, Drawing D-20, *Typical Sections for 20 ft Tanks*, and Drawing D-23, *Structural Steel Lining for 20 ft Tanks*.

### 1.4.2 Ancillary Equipment Providing Access to Single-Shell Tank C-201

One pump pit, six risers, and a hatchway penetrate the SST C-201 roof, providing access to the interior of the tank. Two of the risers, R-9 and R-10, are located in the pump pit. The pit and the other risers are located from the tank roof to slightly above grade. Figure 1-2 provides a top-down view of SST C-201 and includes the pit, risers, and hatchway. Table 1-1 provides basic information on the SST C-201 risers and hatchway before waste retrieval began.

### 1.4.3 Waste Description and Conditions

The waste in SST C-201 consisted of waste from research and development activities conducted at the Hot Semi-Works facility (RPP-15408). A summary of the waste that resided in SST C-201 at the start of retrieval is provided in the Tank Waste Information Network System (TWINS) Best Basis Inventory/Best Basis Calculation Detail, located online at http://twins.pnl.gov/data/datamenu.htm.

Analysis indicated the waste in SST C-201 would have minimal heat-generating capability and that waste retrieval process fluids and chemical reactions were not expected to add heat to the tank. Therefore, no temperature monitoring was required during retrieval operations (RPP-17507, *Waiver of Temperature Requirements During Retrieval of 241-C-200 Series Tanks*).

[1] ENRAF is a registered trademark of Enraf-Nonius, N.V. Verenigde Instrumentenfabricken, Enraf-Nonius Corporation Netherlands, Rontegenweg 1, Delft, Netherlands.

**Figure 1-1. Profile View of C-200-Series Tank.**

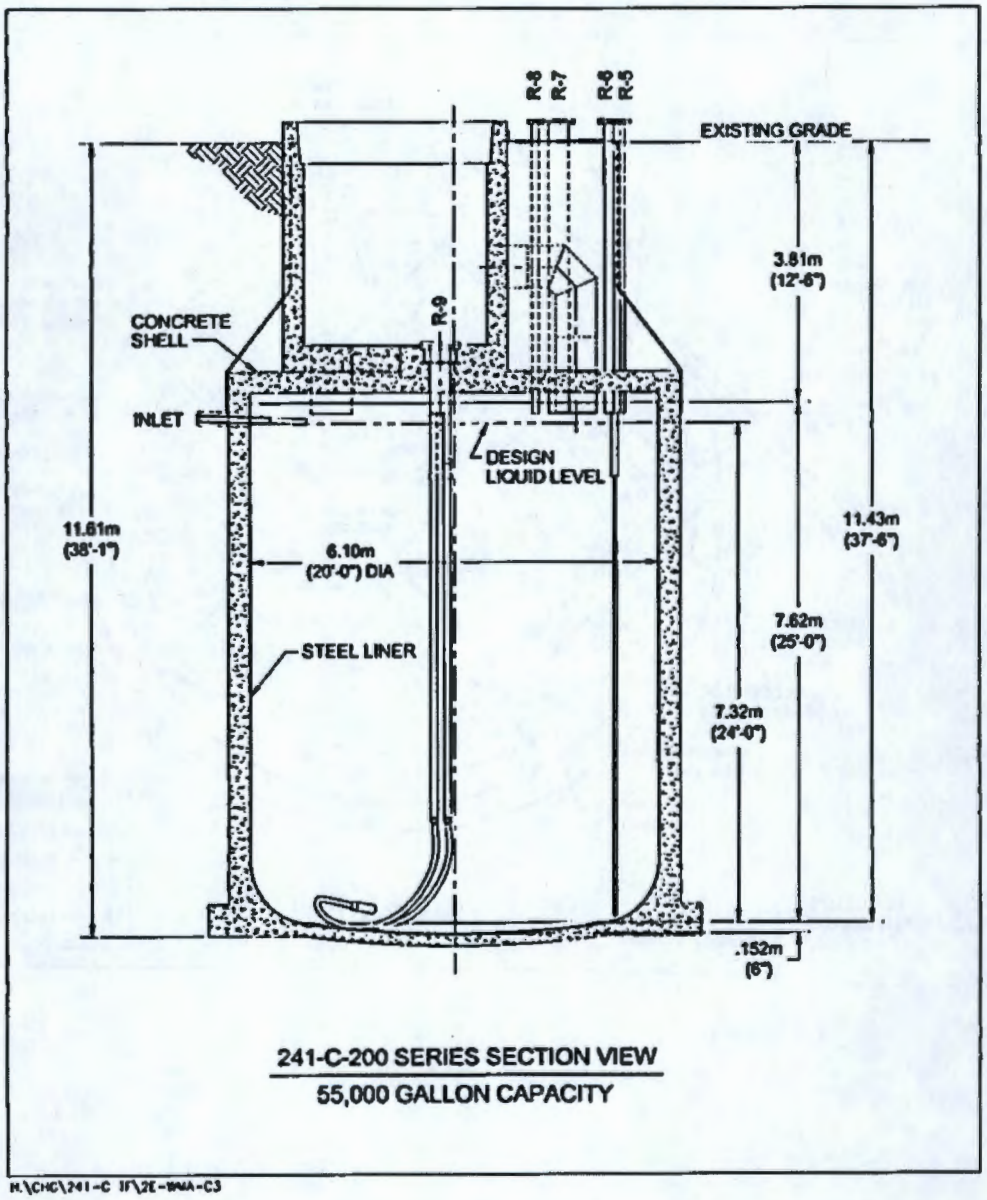

**Figure 1-2. Configuration of Single-Shell Tank C-201 and Adjacent Facilities.**

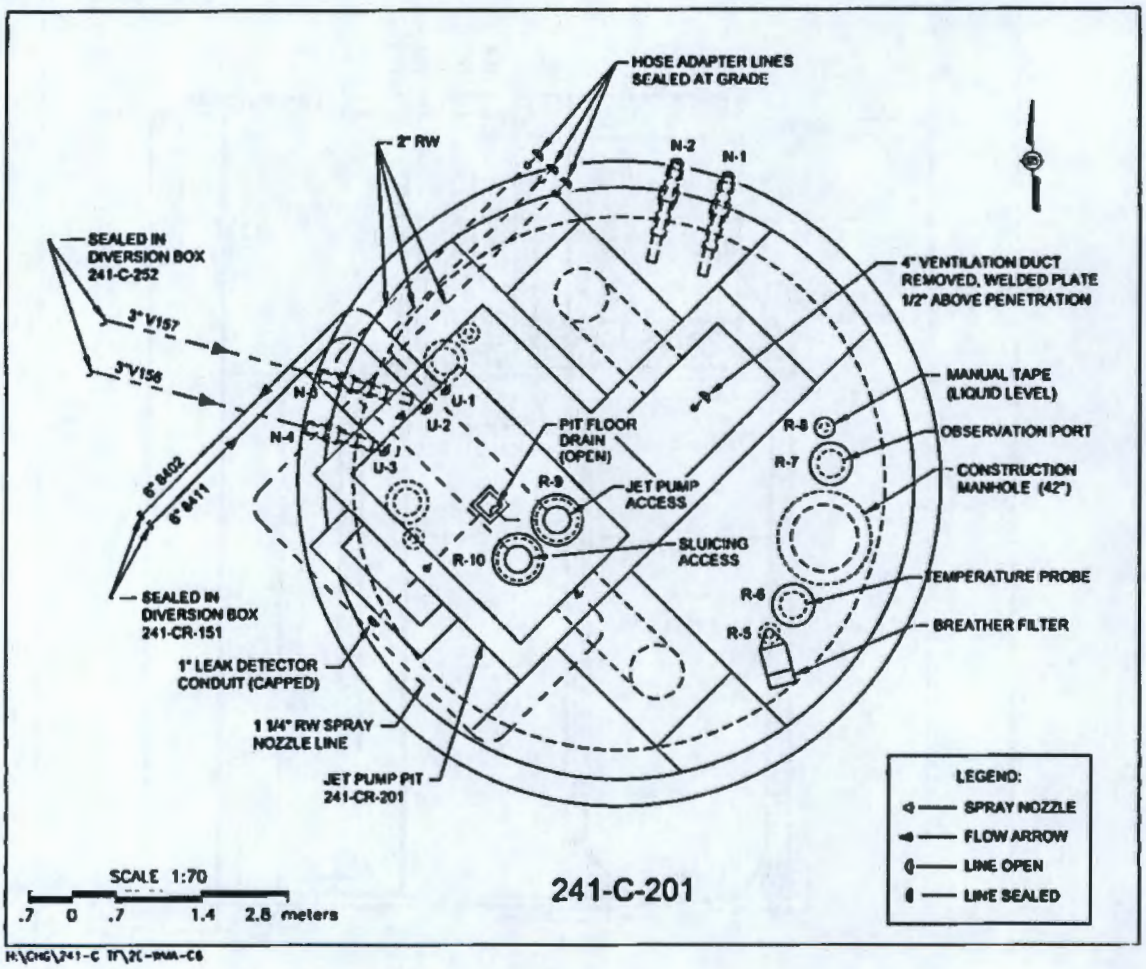

**Table 1-1. SST C-201 Pre-Retrieval Riser and Hatchway Descriptions.**

| Riser ID | Nominal Diameter (in.) | Location | Description and Pre-Retrieval Status/Use | Access |
|---|---|---|---|---|
| R5 | 4 | East of jet pump pit | Breather filter – used for manual tape access | Above grade |
| R6 | 12 | East of jet pump pit | Vacuum exhaust – used for temperature control | Above grade |
| R7 | 12 | East of jet pump pit | Observation port – used for observation | Above grade |
| R8 | 4 | East of jet pump pit | Liquid level reel – used to emplace an air filter (ENRAF liquid level) | Above grade |
| R9 | 12 | Jet pump pit | Jet pump access | Inside pit |
| R10 | 12 | Jet pump pit | Weather-covered – used for sluicing access | Inside pit |
| Hatchway | 24 | Northeast of jet pump pit | Condenser pit, weather-covered – used for general access | Via HVAC hatchway |

Notes:
Primary reference sources for above data are H-14-106126, Sheets 3-6; H-2-73354; and WHC-SD-WM-ER-349.
HVAC = heating, ventilation, and air conditioning.

Waste recovered from SST C-201 was transferred to double-shell tank 241-AN-106 (DST AN-106) for storage. After the waste from all C-200-series tanks is retrieved to it, DST AN-106 will be sampled to define the status of the waste it holds.

## 1.5 DOCUMENT STRUCTURE

This SST C-201 RDR is organized to present information required by Section 2.1.7 of Appendix I to the HFFACO Action Plan. Table 1-2 presents a crosswalk between Section 2.1.7 requirements and sections of this RDR.

- Section 1, *Introduction and Background*, discusses the purpose and scope of SST C-201 waste retrieval, presents requirements applicable to the tank's retrieval campaign and this report, describes the tank and certain associated equipment, summarizes the operating history and in-tank conditions when waste retrieval began, and outlines the report structure.

- Section 2, *Retrieval System Description*, describes waste retrieval system design, construction and operation, lists major waste retrieval system components, depicts the waste retrieval process, and presents a waste retrieval chronology.

- Section 3, *Retrieval System Performance*, provides an evaluation of how well the waste retrieval system performed and provides a comparison of actual performance against predicted performance.

- Section 4, *Leak Detection, Monitoring, and Mitigation*, describes leak detection, monitoring, and mitigation (LDMM) methods and procedures, presents an LDMM chronology for SST C-201 waste retrieval, and summarizes LDMM results.

- **Section 5,** *Limits of Technology,* reports the method and findings used to determine that the selected waste retrieval technology retrieved as much tank waste as technically possible from SST C-201.

- **Section 6,** *Single-Shell Tank 241-C-201 Residual Waste Volume Measurement,* describes the method for determining the volume of residual waste in SST C-201 and presents results of the volume measurement process.

- **Section 7,** *Residual Tank Waste Characterization,* lists requirements for characterization of tank waste, describes methods and procedures used to sample and analyze the waste, and describes the results of laboratory analysis.

- **Section 8,** *Post-Retrieval SST-C-201 Risk Assessment,* summarizes the potential risk to human health from SST C-201 residual waste. This section identifies and discusses constituents of potential concern (COPC) in the waste, describes the effects of waste retrieval and closure on long-term human health risk, presents expected cumulative health effects of source terms, relates calculated risk to residual waste volume, and summarizes overall conclusions of the risk assessment.

- **Section 9,** *Additional Retrieval Technologies,* identifies other technologies considered for retrieving waste from SST C-201. This section describes available and future technologies and alternative waste retrieval scenarios, evaluates alternative methods, and assesses the utility of deploying additional technologies in SST C-201.

- **Section 10,** *Recommendations for Further Actions,* discusses recommendations for future actions associated with SST C-201 and opportunities to refine future waste retrieval operations at other tanks based on lessons learned.

- **Section 11,** *References,* contains references for material cited in the report.

**Table 1-2. Crosswalk of HFFACO Appendix I, Section 2.1.7, Requirements and Corresponding Retrieval Data Report Sections.**

| Section 2.1.7 Requirements | RDR Section |
|---|---|
| Residual tank waste volume measurement, including associated calculations | 6.0 |
| Residual tank waste characterization data and results | 7.0 |
| Retrieval technology performance documentation | 3.0, 5.0 |
| An updated post-retrieval risk assessment | 8.0 |
| Discussion of feasibility and viability of other available retrieval technologies, the feasibility of developing additional retrieval technologies, associated detailed cost estimates, and amount of additional waste that could be removed | 9.0 |
| Opportunities and actions being taken to refine or develop tank waste retrieval technologies based on lessons learned | 10.0 |
| LDMM monitoring and performance results | 4.0 |
| DOE's recommendations for further action and proposed schedules | 10.0 |

# 2.0 RETRIEVAL SYSTEM DESCRIPTION

## 2.1 BASIS

The SST C-201 waste retrieval system was designed and constructed in accordance with RPP-16525, Rev. 6A, *C-200-Series Tanks Retrieval Functions and Requirements*. The functions and requirements document is the predecessor to the tank waste retrieval work plan (TWRWP) now prescribed in Appendix I to the HFFACO. The SST C-201 waste retrieval system was operated in accordance with RPP-16945, Rev. 7, *Process Control Plan for the 241-C-200 Series Waste Retrieval System*.

## 2.2 OVERVIEW

SST C-201 was retrieved using a vacuum retrieval system (VRS) that consisted of an articulating mast system (AMS) with a vacuum head, a vacuum pump, a slurry vessel, and a number of slurry transfer pumps. Auxiliary components included a ventilation system, control trailers, and associated piping and utilities.

The AMS was remotely manipulated to retrieve waste from SST C-201. Vacuum pumps were used to create a vacuum to draw the waste up through the AMS and deposit the waste in the slurry vessel while routing air through the vacuum skid back to the SST. The deposited waste in the slurry vessel was handled as a batch. Each batch was diluted with water as needed and pumped though an aboveground hose-in-hose transfer line (HIHTL) to DST AN-106.

## 2.3 WASTE RETRIEVAL SYSTEM EQUIPMENT

The VRS used the available access ports and risers on SST C-201 to install the AMS and various other supporting equipment and instruments. The AMS was connected above ground to a vessel/pump skid and a vacuum pump skid. A control trailer was used to monitor and control the waste retrieval activities and to operate the AMS. Additionally, active ventilation was connected to SST C-201 using a portable exhauster. The functions and operations of the various VRS components and skids are discussed in Sections 2.3.1 through 2.3.5. Figure 2-1 provides a schematic of the VRS.

### 2.3.1 Articulating Mast System

The AMS is comprised of a hydraulically powered articulating arm with a vacuum head that was rotated, extended, and retracted as necessary to reach all sections of the tank floor. Figure 2-2 provides a graphic depiction of the AMS. A photograph of the vacuum head is provided in Figure 2-3. A series of five scarifying, high-pressure, low-volume water jets, located on the outside of the vacuum head, were used to dislodge waste as needed.

**Figure 2-1. Vacuum Retrieval System Schematic.**

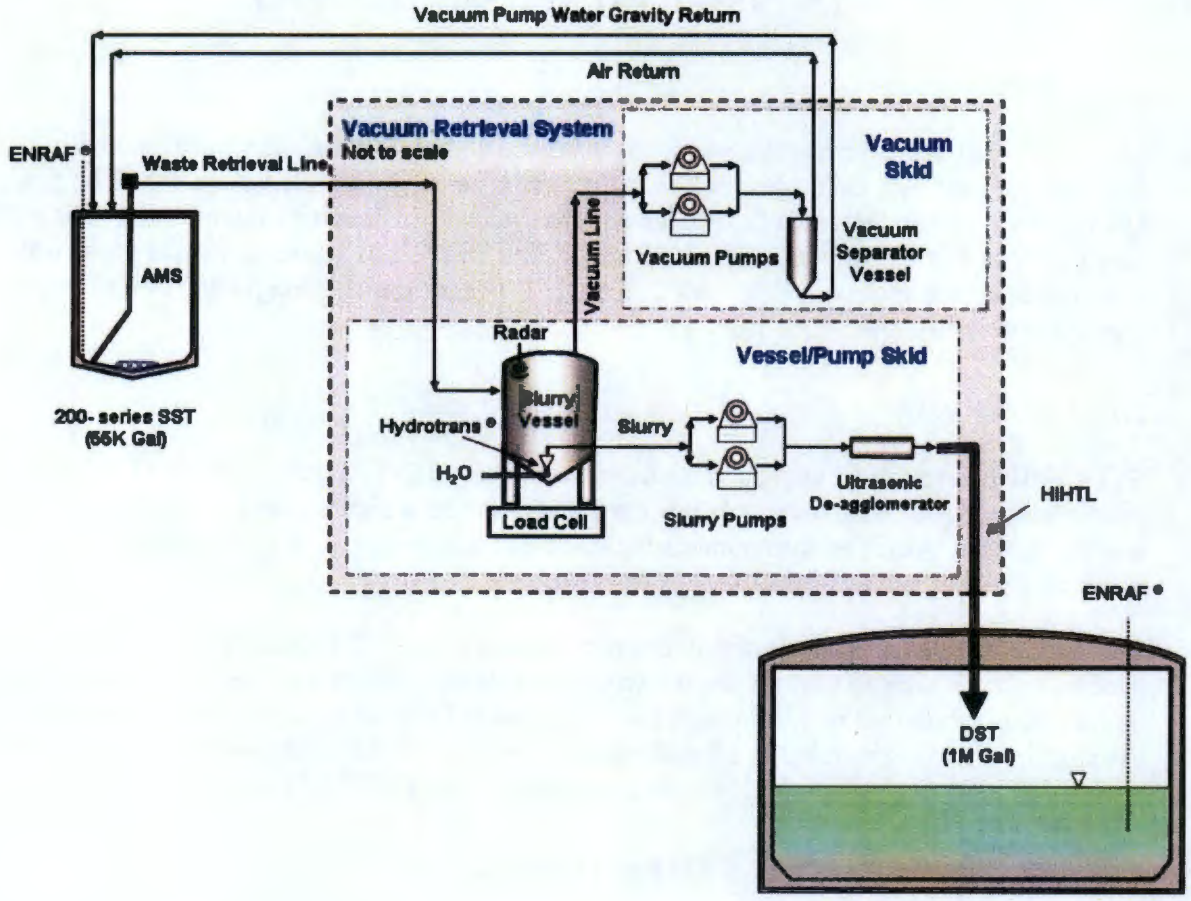


**Figure 2-2. Articulating Mast System in a Single-Shell Tank.**

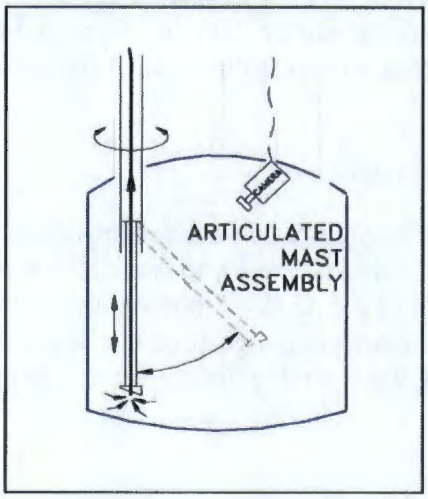

**Figure 2-3. Vacuum Head on Articulating Mast System.**

### 2.3.2 Vessel/Pump Skid

The vessel/pump skid received waste from SST C-201, collected the waste in a slurry vessel, exhausted the air to the vacuum skid, and pumped the slurry to DST AN-106. The waste entered the skid and was directed to the slurry vessel, which had a working volume of 250 gal. The slurry vessel was positioned on load cells that were used to weigh the amount of waste received. The waste was separated from the entrained gases, and when the slurry vessel was filled, waste retrieval activities were stopped.

A vacuum break valve was opened to the slurry vessel to prepare for slurry transfer to DST AN-106 through the HIHTL. The vacuum break line was connected to SST C-201. A Hydrotrans®[2] unit, in conjunction with the slurry pump, was used to mobilize the slurry vessel contents with water and empty the slurry vessel. To prevent plugging, additional water could be added upstream of the slurry pump to maintain sufficient velocity through the HIHTL.

An ultrasonic deagglomerator unit, located downstream from the transfer pump, was used to reduce the waste form into a homogeneous slurry. This enhanced the ability to transport waste at higher densities while minimizing water dilution volume requirements. The operator at the control interface, located inside the control trailer, manipulated dilution control based on feedback from a Coriolis meter and a pressure meter located at the output of the ultrasonic de-agglomeration unit.

### 2.3.3 Vacuum Skid

Two liquid-ring vacuum pumps located on the vacuum skid could be operated simultaneously as needed to achieve the desired suction at the vacuum head on the AMS. The entrained gas flow came from the vessel/pump skid. Gases from the vacuum pump combined with the pump water

[2] Hydrotrans® is a registered trademark of Dynamic Processing Solutions Ltd., Portishead, Bristol, England.

and tangentially flowed into a water separator, effectively separating the gases in a cyclone action. The gases were then returned to SST C-201.

The water in the separator was used to supply the liquid-ring vacuum pump(s). Water flowed to the pump by gravity and by the vacuum that the vacuum pump created. The water also flowed through a heat exchanger that removed the heat generated by the vacuum pump and kept the water cool. High- and low-level switches in the tank maintained the water level in the water separator. Makeup water was supplied by the utility skid, and excess water was returned to SST C-201.

### 2.3.4 Control Trailer

Retrieval operations were controlled and monitored remotely from a control trailer located northeast of SST C-201. A closed-circuit television system (CCTV) was used to allow the AMS to be controlled and positioned. The controls and instruments for the vacuum skid, vessel/pump skid, and CCTV and AMS control were located on one console, and video displays monitoring the pump and vessel skids were on another console.

### 2.3.5 Hose-in-Hose Transfer Line

The waste was transferred from the vessel/pump skid to DST AN-106 through the HIHTL. The transfer line consisted of two hoses, one within the other. The hoses were lined with ethylene propylene diene monomer rubber. The primary hose was a nominal 2-in.-diameter hose that was encased in a nominal 4-in. hose. The HIHTL was insulated and had freeze protection.

The HIHTL was flushed with 240 gal (1.5 line volumes) of water to prevent solids from settling and plugging the lines. Throughout the retrieval of SST C-201, the SpG remained low and therefore transfer line flushes were only required at the end of the shift when the line would not be used for more than 8 hr. Valve and pump configurations in the vessel/pump skid prevented the fluids from draining back to SST C-201.

## 2.4 WASTE RETRIEVAL SYSTEM INSTRUMENTATION

Various instruments were used to measure waste retrieval system performance, retrieval progress, and leak detection monitoring. These instruments included an ENRAF gauge, flowmeters, load cells, and CCTV cameras.

Liquid levels were measured in the SST and DST using an ENRAF-Nonius Series 854 servo tank gauge. The gauge functioned like a bob on a string, sensing liquid level changes through buoyancy. This instrumentation has a high degree of resolution and repeatability and is well-suited for the volumetric method in tanks with a measurable air-liquid interface, and is used throughout tank farms.

The instrument's accuracy for the SST was affected by the liquid level in the tank. When the liquid level dropped below the height of residual solids (typically the case), the instrument did not accurately reflect the volume of waste remaining. In addition, the ENRAF gauge was located near the tank wall, which prevented it from measuring lower than about 11.5 in. above

the lowest point of the tank. Therefore, measurement of the liquid level changes in the DST receiver tank was a more accurate measure of waste retrieved except when other transfers were made involving DST AN-106.

Water use was measured at various points in the waste retrieval process. The flowmeter locations are provided in Section 3.1. The slurry vessel was mounted on load cells that measure the weight of the vessel and its contents. The capacity of the slurry vessel was also measured using a radar liquid-level instrument.

The CCTV was used during the waste retrieval campaign to monitor retrieval activities and, in conjunction with water use estimates, generate rough estimates of the remaining waste. When retrieval was completed, a video was used to generate three-dimensional (3-D) images of the contents remaining in the tank. The residual waste volume was calculated using computer-aided as-built drawings of the tank and the final configuration of the waste.

## 2.5 ENVIRONMENTAL CONTROLS

AIR 03-704, *Approval of Notice of Construction for 241-C-200 Series Tanks Retrieval*, and RPP-16525, Rev. 6A, impose a variety of environmental controls. Application of these controls during SST C-201 waste retrieval operations is summarized in Sections 2.5.1 through 2.5.5.

### 2.5.1 Exhauster Operation

A portable exhauster was operated continuously while the AMS was in use to maintain tank vacuum and abate fog generation that impaired CCTV visibility. Controls were established to cease waste retrieval operations if the exhauster was not functioning. Waste retrieval process operators depended on the CCTV to safely and efficiently position the AMS suction head inside the tank to retrieve waste. The exhauster was also used to control radioactive/nonradioactive air emissions and prevent flammable gas buildup in the tank.

### 2.5.2 Vacuum Routing

SST C-201 was maintained under a negative pressure during waste retrieval activities. Vacuum exhaust drawn from the slurry vessel was routed back to SST C-201.

### 2.5.3 Leak Detection, Monitoring, and Mitigation

The waste retrieval operating strategy incorporated the philosophy of minimizing liquid available for leakage from the onset of retrieval. This was accomplished by the following:

a. Limiting the power-pack hydraulic pressure of the water feed provided to the AMS to the minimum practical for effective retrieval operations.

b. Preventing penetration of the tank bottom during AMS installation.

c. Using a video camera to monitor liquid levels inside the tank during retrieval.

d. Minimizing the presence of liquid pools to the extent practical.

The leak detection and monitoring techniques used are discussed in Section 4.2.

### 2.5.4 Walkdown of Aboveground Portions of the Tank System

The aboveground portions of the tank system were visually inspected daily to identify any abnormalities in the equipment or processes that could lead to releases to the environment.

### 2.5.5 Secondary Containment

Leakage from the primary HIHTL (inner hose) would be contained by the secondary containment system (outer hose) and could be detected by leak detectors, material balance data, or radiological surveys. The secondary containment system was designed to drain any fluid released from the primary hose to a common point for collection, detection, and removal.

The drains located in the vessel/pump skid; vacuum skid; heating, ventilation, and air conditioning (HVAC); and the slurry vessel were routed to SST C-201. The HIHTL, vessel/pump skid drain, and vacuum skid drain were integrated into the automatic leak detection system to shut down the system in the event of a leak.

## 2.6 WASTE RETRIEVAL CAMPAIGN CHRONOLOGY

Table 2-1 provides a chronological summary of the SST C-201 waste retrieval campaign. Retrieval of the waste (and water used for decontamination or flushing) was performed in batches. A batch refers to one filling and emptying of the slurry vessel, which has a capacity of 250 gal; the volume of each batch fluctuated depending on the operations being performed.

**Table 2-1. Chronology of the Single-Shell Tank 241-C-201 Waste Retrieval Campaign. (2 sheets)**

| Date | Description |
|---|---|
| October 25, 2005 | Batch 1 was retrieved from tank 241-C-201, but could not be transferred to tank 241-AN-106 because of a stop work in AN, AW, and SY farms, which was not cleared before the end of the shift. |
| October 27-November 2, 2005 | The hydraulic hoses were moved from SST C-202 to SST C-201 to allow for post-retrieval sampling of SST C-201. No retrieval performed during this period.<br><br>On November 3, 2005, a potential inadequacy in the Safety Basis was identified for the retrieval system. Routing of the vacuum pump water separator drain to the SST C-201 vent hatchway created the possibility of increased consequences from an unfiltered release accident. A Justification for Continued Operations was approved on November 14, 2005. |
| November 15-December 1, 2005 | Completed batches 17 though 29. Continued the use of both the scarifier and mast flushes for retrieval. |
| December 5, 2005 | The AMS seized/bound up and the arm would not rotate; no retrieval could be performed. |
| December 6, 2005-January 4, 2006 | Troubleshooting of the AMS was performed. Hydraulic rotation could not be restored and the decision was made to continue retrieval using manual mast rotations. Retrieval would be performed in a line across the tank, then the mast would be rotated manually to allow another line to be retrieved. |

**Table 2-1. Chronology of the Single-Shell Tank 241-C-201 Waste Retrieval Campaign. (2 sheets)**

| Date | Description |
|---|---|
| January 5, 2006 | Retrieval was attempted, but the AMS would not move. |
| January 6-11, 2006 | More troubleshooting of the AMS was performed. A leak in the hydraulic pressure system made it difficult to maintain hydraulic pressure to move the AMS. Some adjustments were made that would allow retrieval to continue. |
| January 16-24, 2006 | Completed batches 30 through 34 with the AMS in its first fixed rotational position (position 1). During this time, troubleshooting of the hydraulic system continued. |
| January 25-February 6, 2006 | The AMS was manually rotated to its second position and more work on the AMS was performed. A loose wire was found and fixed and a hydraulic pressure control valve was replaced. |
| February 7-15, 2006 | Completed batches 35 through 95 with the AMS manually rotated through positions 2 through 7. As a result of the limited AMS rotational movement, water usage was increased considerably with mast flushes being used to wash solids to more accessible areas of the tank. On February 15, it appeared that very little retrievable solids remained in the tank. Final system flushing was performed and retrieval was halted. |
| February 17, 2006 | Based on the evaluation of in-tank videotapes, further waste retrieval from small waste deposits in areas of the tank appeared possible. The decision was made to continue retrieval of SST C-201 to ensure the limits of technology were reached. |
| February 21-March 7, 2006 | Leak detector functional testing and rotation of the mast to position 8 was performed. Resumption of retrieval was delayed until replacements for a failed fuse holder and fuse were obtained. |
| March 8-23, 2006 | Completed batches 96 through 128 with the AMS rotated through positions 8 through 14. Solids were dislodged and flushed down from the knuckle and upper parts of the tank dish and batches were retrieved. Although visual observations of the retrieval operations indicated some retrieval of solids in AMS positions 8 through 11, low batch SpGs indicate little, if any, waste retrieval. In AMS positions 12 and 13, the AMS was able to move over the dip tube lying near the tank bottom and access an area with deeper waste; waste retrieval was observed, both visually and via increased SpGs when these areas were retrieved. |
| March 23, 2006 | Determination was made that vacuum retrieval was no longer effective in retrieving waste. Final flushes and videos were performed. |

# 3.0 RETRIEVAL SYSTEM PERFORMANCE

This section discusses the SST C-201 waste retrieval system performance in terms of residual waste, retrieval duration, and water use. In addition, this section compares the achieved waste retrieval results against predicted performance. Retrieval and performance data are included in this section.

The SST C-201 waste retrieval system was operated 33 days over a 149-calendar-day period and recovered 690 gal of waste in 128 batches. The waste was retrieved at varying rates (3 gal to 100 gal of SST C-201 waste per batch) over time.

## 3.1 WASTE RETRIEVAL PROCESS DESCRIPTION

The SST C-201 waste retrieval process consisted of low-volume water retrieval using a VRS to remove waste from the tank while minimizing water additions and liquid pooling in the tank. Vacuum pumps were used to mobilize and recover waste via the AMS and deposit the waste in a slurry vessel located above grade. Mobilized solids were diluted in the slurry vessel with raw water and then pumped to the receiver DST AN-106 through an HIHTL. The entire process was monitored to facilitate waste retrieval and minimize free liquid in the tank. The composite material received in DST AN-106 consisted of mobilized tank waste and water added to assist waste retrieval and transport.

In-tank and ex-tank water was added to the waste at various stages of the process. In-tank water additions were primarily for waste mobilization activities and included the following:

a. Scarifying water to break up and move waste.
b. Flush water to move waste from the knuckle on the tank floor.
c. Drain water from the vacuum separator vessel.
d. Drain water from the slurry vessel.
e. Drain water from the exhauster.
f. Drain water from system maintenance.

Ex-tank water was used for transport of waste solids as (1) Hydrotrans® water for mobilizing waste solids in the slurry vessel for transfer, and (2) dilution water to reduce slurry density and flush transfer lines to DST AN-106. Figure 3-1 presents a diagram of the waste retrieval instrumentation. The flowmeters shown in Figure 3-1 are described in Table 3-1. Before retrieval from SST C-201 began, three flowmeters were added to the waste retrieval system to improve the accuracy or detail of the flow of water through the system. Those three flowmeters are shown in Figure 3-1 and are described in Table 3-1.

The two primary sources of water were low pressure (FM-4) and high pressure (POR77-FQI-003). The sum of the values from these two meters accounts for the total water used. High-pressure water was used for one purpose: in-tank scarifying. Low-pressure water was used for multiple purposes as both in-tank and ex-tank water.

**Figure 3-1. C-200-Series Tanks Instrumentation Diagram.**

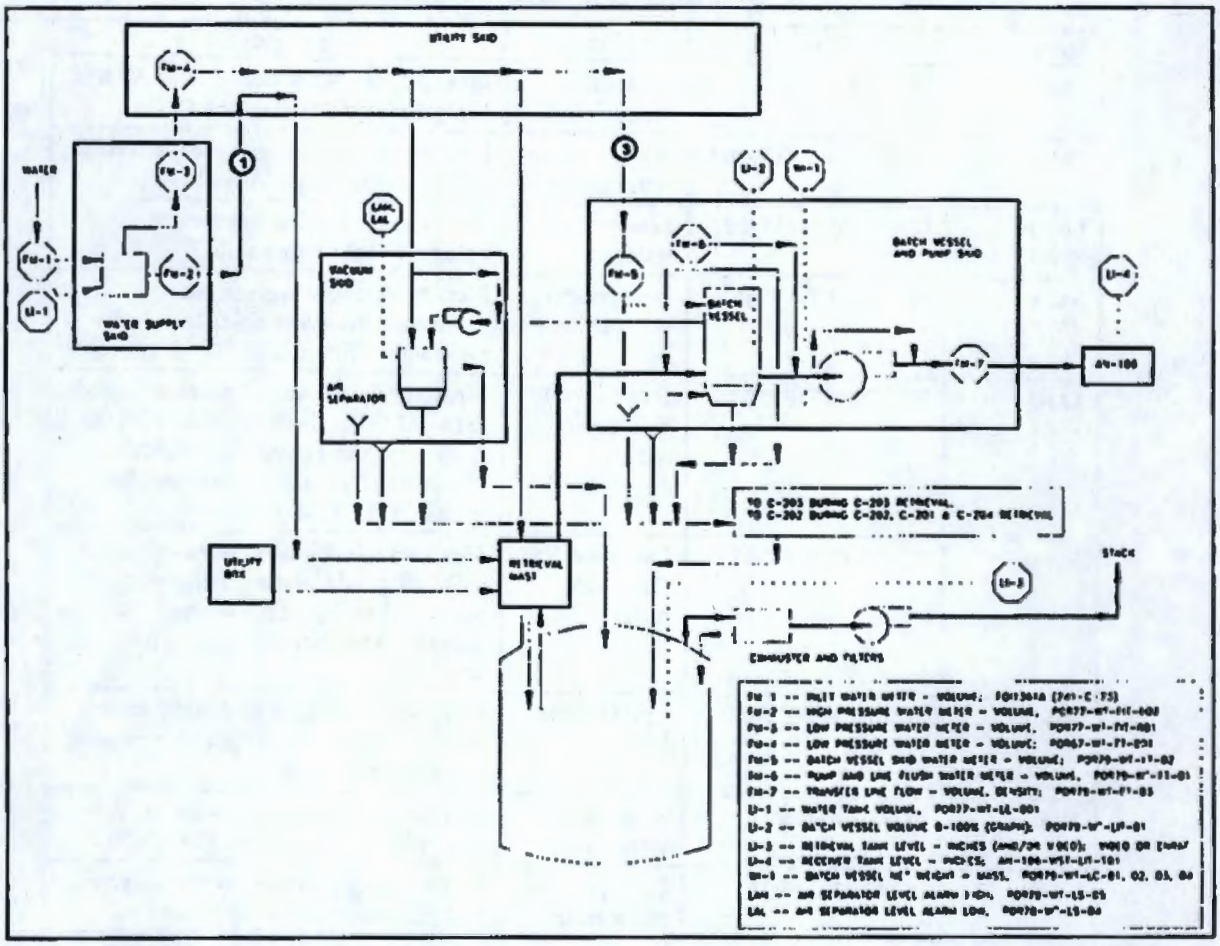


Source: RPP-16525, Rev. 6A.

Note: Three flowmeters were added to the C-200 series retrieval system before retrieval of C-201 but only two were used for SST C-201:

① Denotes POR77-FQI-003

③ Denotes POR67-FQI-003

**Table 3-1. Single-Shell Tank 241-C-201 Retrieval Process Flowmeter Summary.**

| Identifier | Tag[a] | Name | Purpose |
|---|---|---|---|
| FM-1 | **241-C-73** | Inlet water meter | Measures raw water delivered to Air and Water Service Building 241-C-73. |
| FM-2 | **POR77-WT-FIT-002** | High-pressure water meter | Measures high-pressure water delivered to the scarifier on the AMS head. |
| FM-3 | **POR77-WT-FIT-001** | Low-pressure water meter | Measures the low-pressure water delivered to the utility skid. |
| FM-4 | **POR67-WT-FT-001** | Low-pressure water meter | Measures the low-pressure water received at the utility skid. Meters the same supply line as FM-3. |
| FM-5 | **POR79-WT-FT-02** | Batch vessel skid water meter | Measures the amount of water delivered to the AMS for flushing solids from the AMS screen and to mobilize waste (Hydrotrans®) in the slurry vessel for transfer to DST AN-106. |
| FM-6 | **POR79-WT-FT-01** | Pump and line flush water meter | Measures dilution water used to keep solids suspended during transport, to prime and flush transfer pumps, and to maintain waste density within prescribed limits. |
| FM-7 | **POR79-WT-FT-03** | Transfer line flow | Measures the volume of diluted waste delivered to DST AN-106 and measures the relative density. |
| N/A | **POR67-FQI-003** | Vacuum skid water meter | Measures the water sent to the vacuum skid, which is returned to SST C-201. |
| N/A | **POR77-FQI-003** | High-pressure water meter | Measures high-pressure water delivered to the scarifier on the AMS head. |

[a] Equipment tags noted on the piping and instrumentation diagrams. Abbreviations shown in bold.

## 3.2 WASTE RETRIEVAL TECHNOLOGY PERFORMANCE

The performance of the waste retrieval system was monitored throughout the campaign using various indicators. Water meters were used to determine trends in water use. Material balance was used during waste retrieval operations to (1) estimate the waste removed from the tank per operating day, (2) determine retrieval efficiency, and (3) determine trends in retrieval performance.

The material balance was initially calculated as the difference between the measured volume that was added to the system (water) and the measured volume removed from the system (waste and water). There is uncertainty related to these volume measurements as well as to the initial waste volume. A detailed discussion of uncertainties and of the material balance is found in RPP-CALC-29809, *Leak Detection Monitoring Calculation for Single-Shell Tank 241-C-201*.

The material balance calculation was performed every operating day to determine the volume of waste retrieved from SST C-201. An operating day is defined as a shift in which retrieval activities were performed, regardless of number of hours operated or waste transfers.

The ENRAF gauge measurement in DST AN-106 provided daily values for liquid level. The difference between the measurement at the end of an operating day and the previous day's measurement is normally used to determine the volume of waste and water transferred from SST C-201 each day. However, because of the concurrent retrieval of SST C-103, which was also using AN-106 as its receiver tank, the DST liquid level change could not be used to determine the volume of waste retrieved from SST C-201.

An alternate method to determine the volume of waste removed was used to multiply the batch vessel skid discharge by waste densities to determine the volume of tank waste transferred. The volume of transferred waste is determined through a series of calculations using the following data:

a. Daily relative density of transferred slurry (RD).
b. Daily volume of transferred waste ($V_{total}$).
c. Daily volume of transferred slurry ($V_{sl}$).
d. Daily mass of transferred slurry ($M_{sl}$).
e. Daily volume of transfer flush water ($V_{fl}$).
f. Initial best-basis inventory (BBI) waste volume, 862 gal.
g. Density of bulk SST C-201 waste ($SpG_{bulk}$), 1.44 g/mL
h. SpG of SST C-201 solids ($SpG_s$), 2.436.
i. SpG of water ($SpG_{water}$), 1.0.
j. Volume fraction of solids in SST C-201 waste from tank waste samples ($vf_s$), 0.591.
k. Daily volume of transferred tank solids ($V_s$).

To determine the daily volume of waste in the tank, the daily volume of transferred tank solids is subtracted from the previous day's volume. The BBI was used as the basis for the initial volume. The following equations were used to build the formula to determine the daily volume of transferred tank solids. First, the volume of transferred slurry ($V_{sl}$) was determined by subtracting the flush water ($V_{fl}$) the total volume measured by the mass flowmeter ($V_{total}$).

$$V_{sl} = V_{total} - V_{fl}$$

Second, the volume of transferred solids ($V_s$) is a fraction (X) of the total volume of slurry ($V_{sl}$), which is comprised of both water and tank solids. The tank waste solids volume also contains void spaces, which are accounted for by the volume fraction of solids ($vf_s$).

$$V_s = \frac{V_{sl} \cdot X}{vf_s}$$

The volume fraction of solids is the portion of the waste volume that is made up of solids, the remaining volume consists of void spaces filled with air. The volume fraction of solids is determined by dividing the density of the bulk waste (solids and air) by the density of the solids.

$$vf_s = \frac{SpG_{bulk}}{SpG_s} = \frac{1.44}{2.436} = 0.591$$

To determine the fraction of solids, the mass of the slurry transferred ($M_{sl}$) is used to relate the volumes and densities. The mass of the slurry transferred is equal to the volume of slurry transferred ($V_{sl}$) times the relative density (RD) measured by the meter. The mass of the slurry is also equal to the mass of solids plus the mass of liquids. The mass of solids comes from the solids fraction (X) of the slurry times the specific gravity of the solids ($SpG_s$) plus the water fraction (1-X) times the specific gravity of water ($SpG_{water}$). The specific gravity of water is assumed to be 1 and this equation is solved for X.

$$M_{sl} = V_{sl} \cdot RD = V_{sl} \cdot X \cdot SpG_s + V_{sl} \cdot (1 - X) \cdot SpG_{water}$$

$$V_{sl} \cdot RD = V_{sl} \cdot X \cdot SpG_s + V_{sl} - V_{sl} \cdot X$$

$$RD = X \cdot SpG_s + 1 - X$$

$$RD = X \cdot (SpG_s - 1) + 1$$

$$X = \frac{RD - 1}{SpG_s - 1}$$

These equations are combined to form the equation for determining the amount of waste volume transferred out of the tank ($V_s$).

$$V_s = \frac{V_{sl} \cdot (RD - 1)}{vf_s \cdot (SpG_s - 1)}$$

The daily discharge volumes relative density, waste volume and estimated volume remaining are shown in Table 3-2. The volume remaining is based on the BBI pre-retrieval starting volume of 862 gal. Additionally, on two occasions, CCMS was used to provide an estimate of the remaining waste in the tank. On December 1, 2005, and February 16, 2006, the volume was estimated based on visual observation and tank geometry. The estimated volumes are included in the estimate of remaining tank volume.

Figure 3-2 illustrates the SST C-201 retrieval system performance trend based on the data presented in Table 3-2 in terms of volume of waste remaining per operating day based on the assumed starting volume. The sharp drop on day 14 is the result of rebaselining the volume based on the first CCMS waste volume estimate.

Although final volume estimates in Figure 3-2 based on material balance calculations are lower than the residual waste volume (which was determined as described in Section 6.0 to be 19.2 $ft^3$), the material balance provides an estimate for waste retrieval efficiency and trends in performance. The figure shows a gradual decrease in the volume of waste retrieved and that less than 40 gal of waste were retrieved during the last 5-10 operating days.

The waste remaining in SST C-201 was calculated through video camera/computer-aided design modeling system (CCMS) and topographical mapping measurements as described in RPP-23403, *Single-Shell Tank Component Closure Data Quality Objectives* (DQO), for determining the final

waste volume. The final volume determined by this method was 144 gal (19.2 $ft^3$) of waste in SST C-201. Further discussion of the residual waste volume measurement is presented in Section 6.0.

**Table 3-2. Daily Volume Calculation Data.**

| Date | Operating Day | Relative Density, RD | Volume Transferred,[a] $V_{total}$ (gal) | Volume Flush, $V_f$ (gal) | Volume Transferred from Tank, $V_s$ (gal) | Remaining Volume[b] (gal) |
|---|---|---|---|---|---|---|
| 10/25/05 | 1 | | | | | 862 |
| 10/27/05 | 2 | 1.024 | 2090 | 295 | 50 | 812 |
| 10/31/05 | 3 | 1.047 | 605 | 296 | 17 | 795 |
| 11/1/05 | 4 | 1.029 | 963 | 285 | 23 | 771 |
| 11/2/05 | 5 | 1.040 | 1210 | 247 | 46 | 726 |
| 11/15/05 | 6 | 1.035 | 797 | 253 | 22 | 703 |
| 11/16/05 | 7 | 1.040 | 413 | 260 | 7 | 696 |
| 11/21/05 | 8 | 1.028 | 385 | 284 | 3 | 693 |
| 11/23/05 | 9 | 0.000 | 0 | 0 | 0 | 693 |
| 11/28/05 | 10 | 1.012 | 935 | 307 | 9 | 684 |
| 11/29/05 | 11 | 1.082 | 358 | 255 | 10 | 674 |
| 11/30/05 | 12 | 1.026 | 577 | 264 | 10 | 664 |
| 12/1/05 | 13 | 1.025 | 853 | 296 | 16 | 648 |
| 12/1/05 | 14 | | | | | **277** |
| 1/4/06 | 15 | 0.000 | 0 | 0 | 0 | 277 |
| 1/5/06 | 16 | 1.000 | 83 | 0 | 0 | 277 |
| 1/16/06 | 17 | 1.063 | 385 | 240 | 11 | 266 |
| 1/20/06 | 18 | 1.043 | 303 | 143 | 8 | 258 |
| 1/23/06 | 19 | 0.000 | 0 | 0 | 0 | 258 |
| 1/24/06 | 20 | 1.008 | 853 | 139 | 7 | 251 |
| 2/7/06 | 21 | 1.014 | 2090 | 251 | 31 | 220 |
| 2/8/06 | 22 | 1.009 | 1457 | 244 | 13 | 207 |
| 2/9/06 | 23 | 1.004 | 3547 | 246 | 17 | 190 |
| 2/13/06 | 24 | 1.003 | 2448 | 249 | 8 | 182 |
| 2/14/06 | 25 | 1.003 | 1127 | 248 | 3 | 179 |
| 2/15/06 | 26 | 1.000 | 2860 | 348 | 0 | 179 |
| 2/16/06 | 27 | | | | | **182** |
| 3/9/06 | 28 | 1.000 | 922 | 270 | 0 | 182 |
| 3/16/06 | 29 | 1.000 | 910 | 251 | 0 | 182 |
| 3/20/06 | 30 | 1.000 | 908 | 275 | 0 | 182 |
| 3/21/06 | 31 | 1.002 | 1430 | 249 | 2 | 180 |
| 3/22/06 | 32 | 1.002 | 3135 | 248 | 7 | 173 |
| 3/23/06 | 33 | 1.002 | 1073 | 512 | 1 | 172 |

[a] Volume transferred measured by flowmeter POR79-WT-FT03 located in the batch vessel skid. This data is provided on Data Sheet WT-7836 (CHAMPS-2005).

[b] Remaining volume represents all of the waste in the tank; bolded values result from video-based estimates of volume in the bottom of the tank plus the waste volume found in equipment and on the tank wall.

**Figure 3-2. Residual Tank Waste Volume Trend During Retrieval Campaign per Operating Day.**

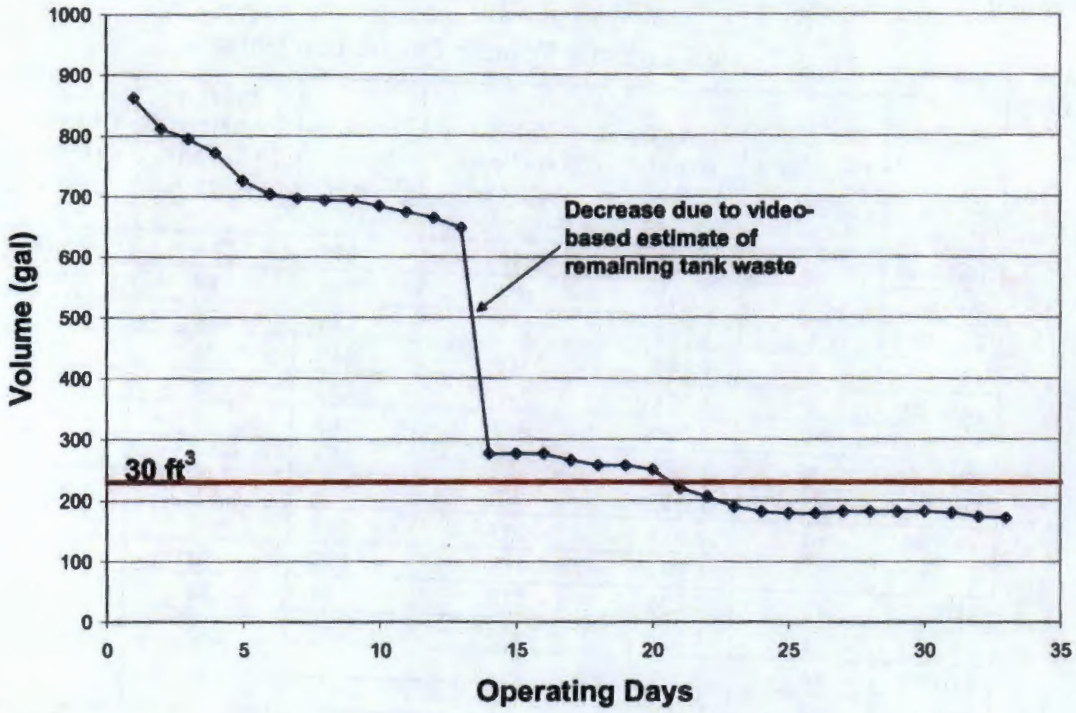


Pre-retrieval goals for the waste retrieval system performance were provided in various planning documents. The key performance measures used to evaluate the actual system performance following the campaign are described in Table 3-3.

## 3.3 PREDICTED VERSUS ACTUAL TECHNOLOGY PERFORMANCE

The waste retrieval data was used to evaluate the system's performance against the pre-retrieval goals; results of the evaluation are summarized in Table 3-3.. The system exceeded expectations for the residual waste volume estimate. The post-retrieval calculations indicated that the performance indicators for retrieval time, total water use, and retrieval rate fell short of their targets. The performance curves presented in this section indicate that the system performed to expectations until the end of the campaign, when less waste was available for retrieval.

**Table 3-3. System Performance Summary.**

| Measurement | Estimated Prior to Retrieval Start | Actual | Achieved Expectations? |
|---|---|---|---|
| Remaining tank waste residues volume ($ft^3$) | <30[a] | 19.2[b] | Yes |
| Retrieval time (days) | 22 | 33 | No |
| Retrieval rate (gal of waste per batch) | 7[c] | 5.6[d] | No |
| Total water use (gal) | 30,000[e] | 31,784[f] | No |

[a] Defined by the HFFACO as "retrieval of as much waste as technically possible, with tank residues not to exceed...30 $ft^3$ in each of the 200-series tanks, or the limit of waste retrieval technology capability, whichever is less."
[b] Remaining tank waste residues volume reported in RPP-29441, *Post-Retrieval Waste Volume Determination for Single-Shell Tank 241-C-201*.
[c] This is calculated using a batch volume of 250 gal (RPP-16945, Section 2.3.1, page 13), and SST C-201 initial waste volume of 862 gal (based on the BBI). It was predicted that it would take 30,000 gal of water to retrieve 862 gal of waste. Therefore about 35 gal of water is used per gal of waste retrieved. A 250-gal batch of slurry would therefore contain about 7 gal of waste.
[d] Retrieval rate was calculated using the volume retrieved from SST C-201 and the total batches, as follows:
Volume of waste retrieved from SST (690 gal) ÷ Total number of batches (128) = 5.4.
[e] Estimated water use for the C-201 campaign was 30,000 based on RPP-RPT-25160, Rev.1, *Waste Compatibility Assessment of Tank 241-C-103 Waste with Tank 241-AN-106 Waste and Tank 241-AN-106 Waste with Tank 241-C-103 Waste.*
[f] Total water use = 27,236 gal (FM-4) + 4,548 gal (POR77-FQI-003) = 31,784 gal.

### 3.3.1 Water Use

Before retrieval began, the projected water use was estimated to be 30,000 gal based on retrieval experience with SST C-202 and SST C-203. The waste retrieval campaign used an estimated 31,784 gal of water. In-tank water use totaled about 16,600 gal and ex-tank water use was about 15,100 gal. Water use for the SST C-201 retrieval campaign was about half of that used for the SST 241-C-203 (SST C-203) retrieval campaign, but more than twice the volume used for retrieval of SST C-202. After the retrieval of SST C-202, it was discovered that the air and water lines in the mast could become contaminated, a scenario that was not covered in the Safety Basis. Therefore, the system was modified so that injection of air and water into the mast was not possible during the retrieval of SST C-201. The inability to use lube water and air injection in the AMS required that air and water be provided to the AMS by other means. Water additions to the tank via mast flushes and scarifier were used to substitute for lube water. Air from the tank headspace substituted for the air injection. The volume of flush water used for C-201 was about 11,000 gal, which accounted for about a third of the total water used.

Transfer line flushes were decreased from every third batch for SST C-203 to about once per operating day for SST C-201. The reduction was made after trends in operating data showed that the waste was sufficiently diluted (relative density less than 1.1) prior to entering the DST to minimize the risk of line plugging. However, water use for transfer line flushes was similar to retrieval of SST C-202 where line flush frequency had initially been decreased. Transfer line flushes accounted for about one-fifth of the water used for waste retrieval. Figure 3-3 presents water use on each operating day of the SST C-201 retrieval campaign separated into in-tank and ex-tank water. Daily in-tank water use is shown in Figure 3-4. Overall, more ex-tank water was used than in-tank water as indicated in Figure 3-5, reducing the risk of leak loss associated with the volume of water used. In-tank and ex-tank water disposition is presented in Table 3-4.

**Figure 3-3. Daily Comparison of In-tank and Ex-tank Water.**

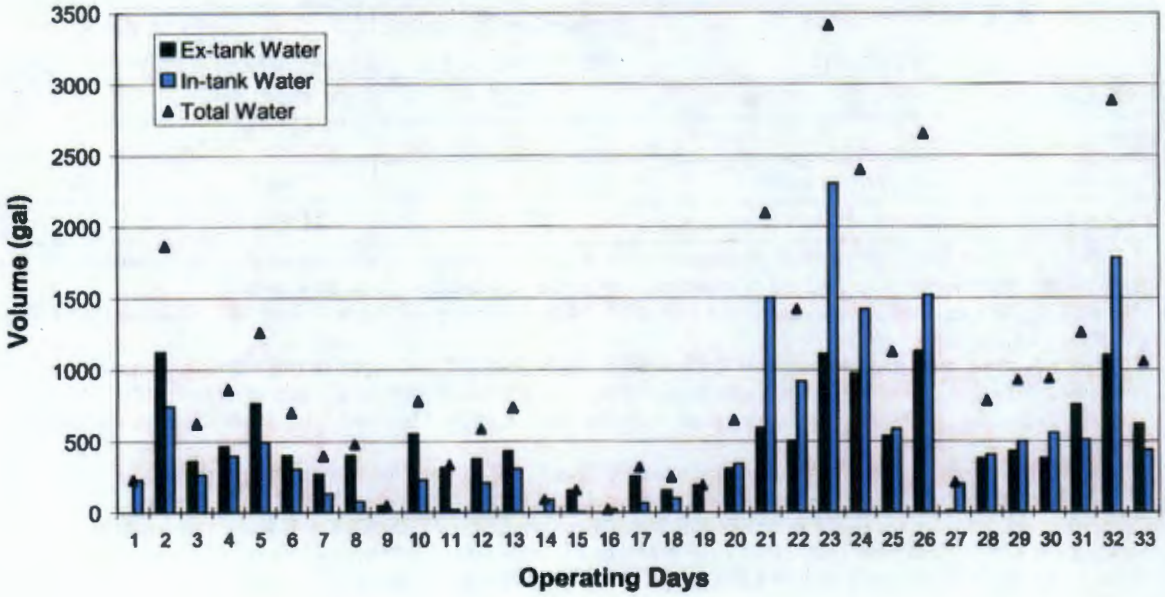


**Figure 3-4. Daily In-tank Water Use.**

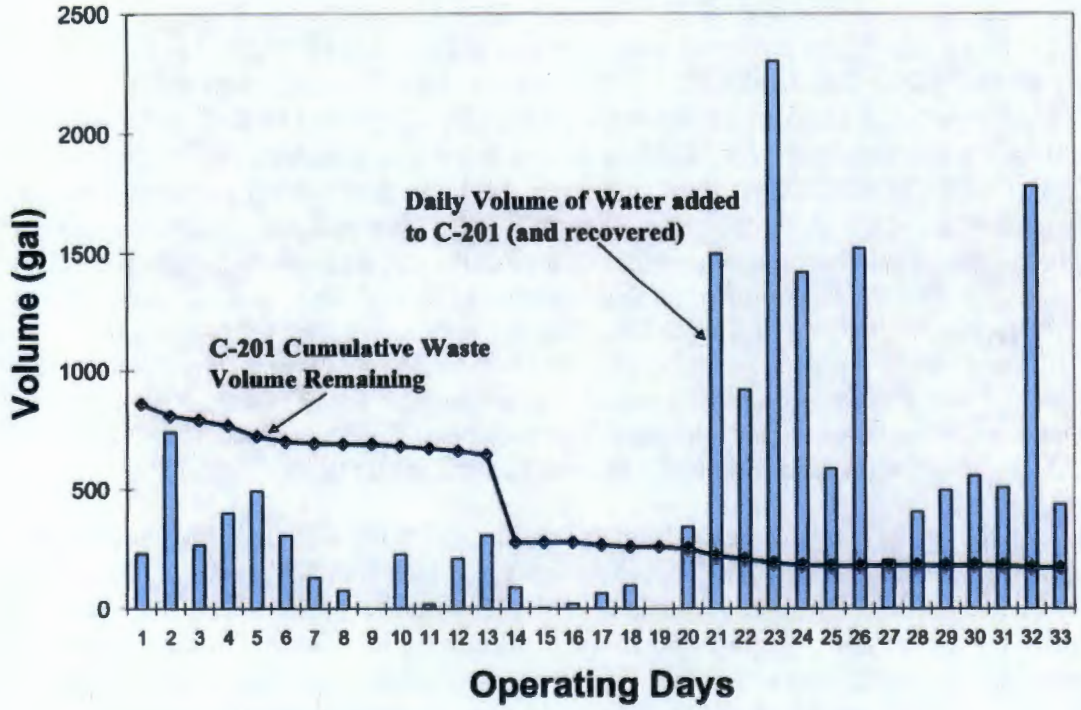

**Figure 3-5. Proportion of In-tank and Ex-tank Water Use.**

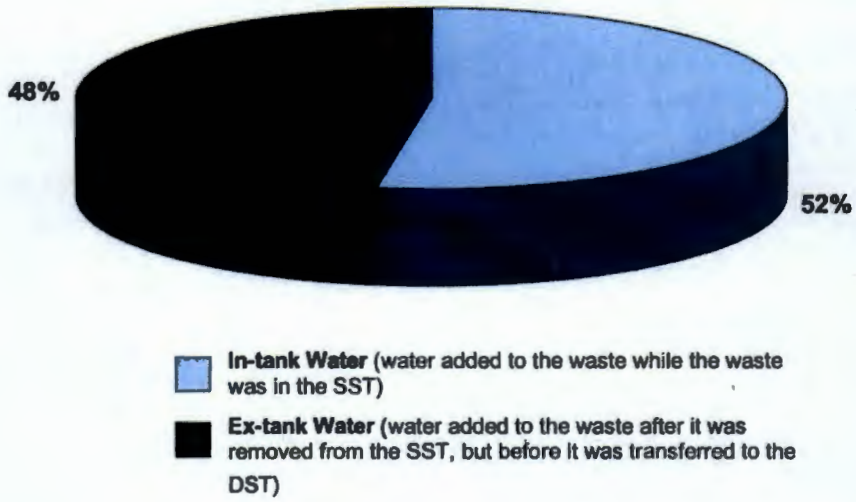


**Table 3-4. Water Use and Disposition.**

| Water Use | Actual (gal) | Entered C-201? | Description of Estimation Method[a] |
|---|---|---|---|
| Transport and mobilize waste solids | 13,817 | No | Total amounts recorded by FM-4 minus the amount attributed to washing , slurry vessel drains, and vacuum separator water.[b] |
| Scarifying | 4,548 | Yes | Total amount recorded by FM-2. |
| Water returned to SST C-201 from vessel/pump skid | 10,910 | Yes | Values recorded by FM-5 attributed to mast flushes and slurry vessel drains. |
| Vacuum separator vessel makeup water | 1,206 | Yes | Total amounts recorded by FM-5 while water was added to vacuum separator vessel. |
| Total assumed to have passed through SST C-201 prior to being deposited into DST AN-106 (i.e., in-tank water) | 16,665 | Yes | Summation of values above with 'Yes' in the third column of this table. |
| Ex-tank water | 15,119 | No | Summation of values above with 'No' in the third column of this table. |
| Total water used | 31,784 | NA | Summation of FM-2 and FM-4. |

[a] See Table 3-1 for a description of all FM (flowmeter) numbers.

[b] Low pressure water (for mobilizing the waste) was estimated by subtracting the wash water estimate of 10,910 gal and water separator volumes of 1,206 gal from the total for FM-4 (27,236 gal). The total was 27,236 – 10,910 – 1,206 = 115,119 gal. (Numbers do not match exactly due to rounding errors.)

### 3.3.2 Waste Retrieval Rate

The preliminary estimate of the retrieval rate for the SST C-201 campaign was developed using the batch volume and predicted water use. The batch volume is 250 gal based on the size of the batch vessel, the predicted water use is 30,000 gal, and the waste volume to be retrieved is

862 gal. The ratio of water to waste is about 35 to 1, resulting in a predicted retrieval rate of 7 gal per batch. On average, the system performed at 5.4 gal per batch, below the estimated pre-retrieval rate.

The waste retrieval rate generally met expectations until day 24 of the campaign. After day 24, retrieval results diminished, showing little if any daily progress. The operating days showing a retrieval rate of zero in Figure 3-6 are due to the relative density readings showing a relative density equal to or less than 1.00. This involved days where entrained air in the slurry or low readings near the beginning and end of the slurry transfer caused the values to be low.

**Figure 3-6. Waste Retrieval Rate During Campaign.**

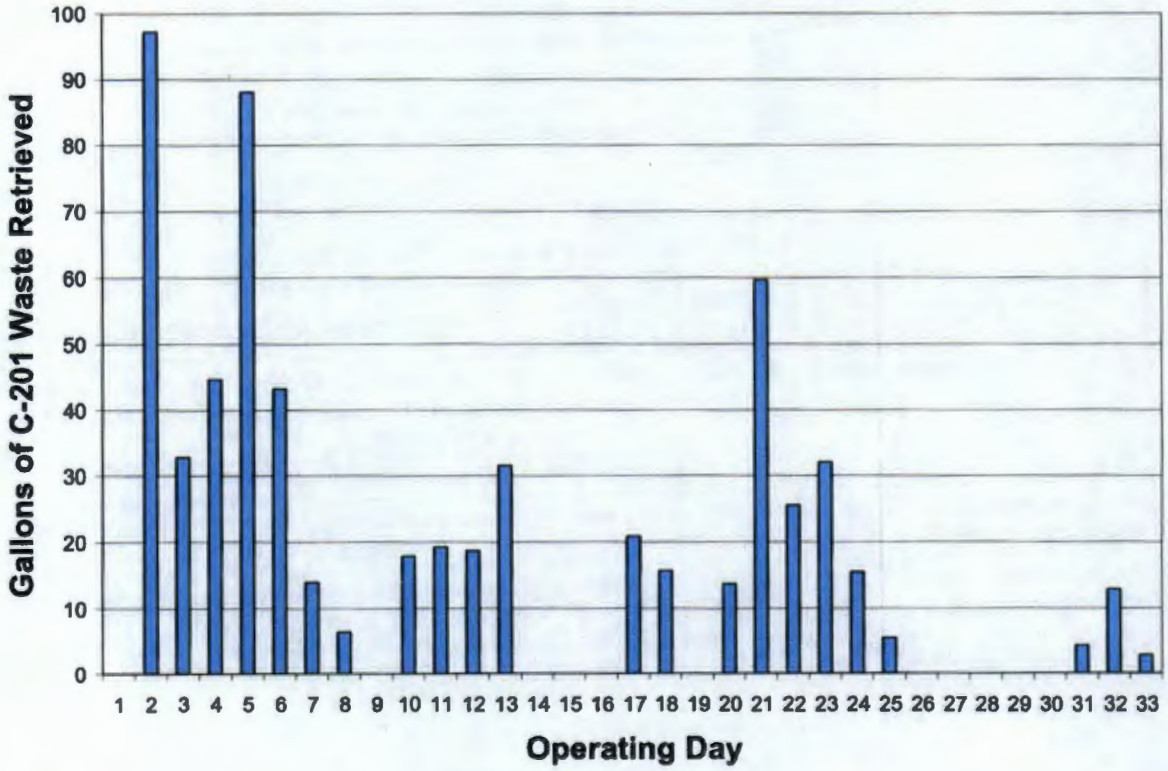


Note: Sporadic values equal to zero indicate that retrieval of waste did not occur due to repairs or the relative density did not demonstrate retrieval of waste. In these cases, the relative density was equal to or slightly less than 1.

### 3.3.3 Retrieval Time

The pre-retrieval estimate of 22 days was based on performance data from the retrieval of SST C-202 and SST C-203. The retrieval rate was assumed to be comparable, and the number of days was scaled to account for less initial waste volume. Lessons learned from the retrieval of SST C-203 were successfully applied to estimate retrieval time required for retrieval of SST C-201.

The pre-retrieval estimate of 22 days did not provide sufficient time to retrieve SST C-201 to the limits of the technology selected. Due to the limited mobility of the AMS, retrieval was not able to proceed as efficiently and required more time to retrieve the tank waste. The VRS had retrieved more than half of the total residual waste by day 15 of the campaign and the system continued to recover measurable volumes of waste through day 24. The campaign was continued another 8 days to recover additional waste.

On operating day 14, the AMS lost the ability to rotate using the hydraulic controls. Although the mast could be repositioned manually, this restricted the AMS to localized areas of the tank and significantly limited its mobility. For each rotational position, the AMS could retrieve in a line across the tank bottom. Using the scarifier to mobilize waste adjacent to the path of the AMS suction head allowed a path two to three times the width of the AMS head to be influenced. This retrieval method required more time to reach all areas of the tank. Additionally, as more waste was removed from the tank, the residual waste became more difficult to retrieve. The waste broke into chunks and had a gravelly appearance. This material required more effort to be lifted out of the tank and remained suspended through the waste retrieval system process.

## 3.4 CONCLUSION

Compared to performance goals (Table 3-3), the SST C-201 waste retrieval system met expectations in residual waste remaining in the tank. However, limitations due to manual positioning of the AMS affected performance and resulted in higher than expected water use, a lower than expected retrieval rate, and a longer retrieval time in days.

# 4.0 LEAK DETECTION, MONITORING, AND MITIGATION

The LDMM program was implemented to protect the workers, public, and environment from leaks of radioactive liquid waste. The LDMM program includes technologies and methods used prior to, during, and after waste retrieval to detect leaks, reduce the potential for a leak to occur, or minimize leak volumes. Additionally, the LDMM program quantifies liquid waste release volumes should a release be detected. There was no evidence of a leak during retrieval of waste from SST C-201.

Unlike the 100-series tanks, the C-200-series tanks do not have drywells in the vicinity of the tank wall to detect or measure leaks. SST C-201 was categorized as an "assumed leaker" in 1988 based on level decreases; 450 gal of waste was estimated to have leaked from SST C-201 (HNF-EP-0182) (see Section 1.2). In the intervening years between its categorization as an "assumed leaker" and recent retrieval, not enough liquid was present in the tank to warrant additional LDMM measures. This tank was given higher priority for retrieval, and a leak mitigation strategy that strictly controlled the amount of liquids used was implemented. RPP-16525, Rev. 6A, establishes that a mass balance will be performed at the conclusion of retrieval as the leak detection and monitoring (LDM) method.

The approach described in RPP-16525, Rev. 6A, is based on preventing leakage, minimizing leak volumes if a leak should occur, and using available process control data for indication of possible leakage. The strategy implemented was to not allow additional volumes of liquid into SST C-201 beyond that required to break up the waste close to the vacuum head for subsequent removal.

The following sections describe the LDMM requirements, LDM implementation, mitigative approach, chronology, and results. The major results for the LDMM program during SST C-201 waste retrieval are as follows:

a. There was no evidence of a leak during waste retrieval based on results of in-tank liquid level monitoring and skid leak detectors.

b. The material balance calculation results established no evidence of a leak during retrieval (see Section 4.2.1.3).

c. Water minimization was implemented as part of leak mitigation.

## 4.1 REQUIREMENTS

The LDM system incorporating mitigation was established in RPP-16525, Rev. 6A. Requirements are also contained in the safety basis controls given in RPP-17190, *Safety Evaluation of the Waste Retrieval System Vacuum System for 241-C Tank Farms 200-Series Tanks*, and HNF-SD-WM-TSR-006, *Technical Safety Requirements for Tank Farms*, specifically Technical Safety Requirement (TSR) Limiting Condition for Operation (LCO) Section 3.1.1, "Transfer Leak Detection Systems." Material balances during transfers are required by the TSR Administrative Control (AC) Section 5.11, "Transfer Control," and RPP-12711, *Temporary Waste Transfer Line Management Program Plan*.

The primary procedures governing notification and reporting of leaks are TFC-OPS-OPER-C-24, *Occurrence Reporting and Processing of Operations Information*, and TFC-ESHQ-ENV_FS-C-01, *Environmental Notification*.

## 4.2 LEAK DETECTION AND MONITORING

During retrieval of waste from SST C-201, LDM was accomplished by the use of ENRAF gauges in DST AN-106, visual inspection, leak detectors, radiological monitoring, and material balances as shown in Table 4-1 and discussed in Sections 4.2.1 through 4.2.3.

**Table 4-1. Leak Detection and Monitoring Methods for Each Waste Retrieval System Component.**

| Component | LDM Method |
|---|---|
| SST C-201 | Limited liquid level monitoring, visual inspection, material balance |
| DST AN-106 | Liquid level monitoring,[a] annulus leak detectors, radiation monitoring for annulus exhaust air |
| Ancillary equipment (skids, HHHTL) | Leak detectors |

[a] Except when DST AN-106 was being used concurrently to receive liquid from the SST C-103 retrieval.

### 4.2.1 Single-Shell Tank C-201

**4.2.1.1. Liquid Level Monitoring.** The overall waste retrieval operating strategy for SST C-201 was to reduce the tank liquid inventory and minimize liquid additions during waste retrieval operations. Liquid levels were monitored to evaluate liquid inventories and indicate potential leaks in the system to implement this strategy. The ENRAF device installed in SST C-201 did not have a consistent liquid surface to measure and was not relied on for leak detection purposes. See Section 2.4 for a description of how the instrument functions.

**4.2.1.2. Visual Inspection.** Before initiating waste retrieval operations, a visual assessment and documentation of in-tank conditions in SST C-201 were performed using an in-tank video camera. Throughout waste retrieval, the CCTV system was used to identify the waste surface condition, qualitatively assess the amount of liquid in the tank, observe any significant changes, and implement the mitigation strategy of minimizing liquid pools.

Observations of the waste surface in SST C-201 indicate that the surface level decrease corresponded with waste retrieval activities. Unexpected increases or decreases in the surface level of SST C-201 were not observed. Because surface liquid had been minimized in SST C-201 prior to extended downtimes, evaporative loss was not noted during waste retrieval.

**4.2.1.3. Material Balance.** Material balances are primarily used for process performance measurements (see Section 3.2). However, they also provide useful information for determining gross indications of leaks in the system. The material balance is performed to account for all of the water and waste that moves through the system. A material balance discrepancy (MBD) occurs when the amount of material going in and coming out does not match the change in the

system. This calculation is presented in RPP-CALC-29809. The material balance is calculated using this basic equation:

*Material balance discrepancy (MBD) = start volume + additions – removals – ending volume*

Waste transfers have permissible MBD limits based on system-specific variables and estimated accuracies of instrumentation. On completion of retrieval, an overall MBD was calculated. The MBD limit was calculated as the limit of error associated with all volume measurements or volume estimates associated with the SST C-201 retrieval process. Should the MBD exceed the limit of error, the difference between the MBD and the limit of error is called waste unaccounted for (WUF). Therefore, if the MBD is

a. Negative, the WUF = 0.
b. Positive but ≤ limit of error associated with the SST C-201 retrieval volume measurements or volume estimates, the WUF = 0.
c. Positive and > limit of error associated with the SST C-201 retrieval volume measurements or volume estimates, the WUF = MBD – limit of error.

The limit of error is assumed to be the following:

limit of error = $(\Sigma U_i^2)^{1/2}$

where $U_1$ = uncertainty with stream 1, $U_2$ = uncertainty with stream 2, etc.

The square-root-of-the-sum-of-squares method for estimating the limit of error is based on an assumption of independence between the variables. Details of the uncertainty calculations can be found in RPP-CALC-29809.

The system material balance had an MBD of -278 gal, well within the uncertainty of ±1332 gal. The WUF for the primary MBD is zero, thereby establishing no evidence of a leak during retrieval. More detailed results are presented in RPP-CALC-29809.

### 4.2.2 Double-Shell Tank AN-106

**4.2.2.1. Liquid Level Monitoring.** Daily liquid level measurements were recorded for the receiving DST, which was DST AN-106. The ENRAF gauge is capable of accurately measuring liquid level changes of 0.01 in. See Section 2.4 for a description of how the instrument functions.

During waste retrieval there was no evidence of a release from DST AN-106 based on results of liquid level monitoring. A consistent increase in liquid level was noted in DST AN-106 throughout retrieval. The DST AN-106 liquid level increase corresponded with the material balance results for SST C-201, except during concurrent use of the DST to receive liquids from SST C-103 retrieval.

**4.2.2.2. Leak Detectors.** DST AN-106 is monitored for leaks in the inner shell by a conductivity probe leak detection system installed in the tank annulus during tank construction.

Slots cut in the concrete that support the tank at the bottom are designed to drain any leakage to the annulus floor. Conductivity probe assemblies on the annulus floor would activate an audible alarm and an annunciator panel light in the event of liquid leaking to the annulus so that mitigation would begin. Throughout the SST C-201 waste retrieval campaign, no leaks were detected by any of the leak detectors in DST AN-106.

**4.2.2.3. Radiation Monitoring.** A continuous air monitor operated to detect airborne radionuclides entrained in the ventilation exhaust stream of the annulus of DST AN-106. Detection of radiation exceeding a set limit in the annulus of the DST would activate an audible alarm and an annunciator panel light, initiating mitigative action.

The continuous air monitor for the DST AN-106 annulus detected no radiation levels above background during retrieval that could have been attributed to leak-induced airborne radionuclides.

### 4.2.3 Ancillary Equipment

Leak detectors were installed in the vessel/pump skid, vacuum skid, and HIHTL (secondary containment structures) to detect the presence of liquid through conductivity, which would activate alarms and shut down the waste retrieval system. Leak detectors were also placed in skid drain lines that were anticipated to be used in the event of a leak but otherwise should have remained dry. These skid leak detectors would have provided immediate notification of a leak from any ancillary equipment in the SST C-201 waste retrieval system, allowing initiation of appropriate mitigation actions.

Throughout the SST C-201 waste retrieval campaign, no leaks were detected by any of the leak detectors on the skids or HIHTL.

## 4.3 MITIGATION

Leak mitigation was accomplished through design features and the operational strategy developed for the VRS. Mitigation included actions that reduced the chance of a leak and the environmental impact of a leak should one have occurred. Potential leaks were proactively prevented and minimized throughout the waste retrieval operations.

### 4.3.1 Single-Shell Tank C-201

A summary of the SST C-201 mitigation is as follows:

a. Addition of water to the retrieval tank was minimized as described in Section 3.3.1. Liquid pools that formed were removed to the extent practical.

b. Waste was retrieved to the extent practical by working from the center of the tank outwards. In the center-out waste retrieval strategy, dissolved waste and interstitial liquids drain quickly into a central pool and can be rapidly pumped from the tank if a leak is detected.

c. Waste retrieval activities were performed only while a video camera was in place to observe the AMS vacuum head and waste surface.

d. Equipment handling controls were used to minimize the potential for dropping equipment into the tank, which could penetrate the tank bottom during installation.

e. The hydraulic pressure to the AMS was reduced to the extent practical while still permitting acceptable AMS operation to minimize the potential for putting excessive pressure on the tank wall during retrieval operations.

f. A benchmark level was maintained to ensure a low head of introduced liquid. The waste level did not exceed this benchmark. For SST C-201, the benchmark was 12 in., as measured by manual tape from the tank sidewall (2,065 gal of waste).

The SST C-201 retrieval process lasted only 149 calendar days, minimizing the amount of time for retrieval liquids to leak from the tank. As discussed in Section 3.0, the waste retrieval process took more time than planned and more water was used during retrieval than expected due to operating the AMS manually. The mitigative approach was implemented to ensure that potential leakage from SST C-201 was carefully monitored at all times. Key mitigative actions are described in Sections 4.3.2 and 4.3.3.

### 4.3.2 Double-Shell Tank AN-106

The only tank used to receive SST C-201 tank waste was DST AN-106. Mitigating actions for a leak from DST AN-106 primary tank piping into the secondary DST containment system during a waste transfer from SST C-201 would have included (1) stopping the flow of waste into the tank system (stopping the transfer), (2) pumping waste in the primary tank to another DST until the liquid level in the secondary containment was no longer increasing, and (3) removing the waste from the secondary containment system as soon as practicable. Leaks at or near the DST AN-106 tank bottom may also have required saltwell jet pumping to remove trapped liquids from between solid layers in the tank. Transfer line leakage would drain back to the batch vessel/pump skid and subsequently to SST C-201.

### 4.3.3 Ancillary Equipment

Should a leak have occurred within the skids, the liquid would have drained to SST C-201, not to the surrounding soils. Any water that collected in the skid floor pan would have activated a leak detector, which would shut down all skid operations. Should a leak have occurred within the skid, the waste retrieval process would have halted automatically when the leak detector activated and shut down the transfer pumps. The process could also have been halted manually if the leak was visually observed during routine inspections. Any detected leaks would have been mitigated before the process was restarted. The response to a leak would have been the same regardless of leak rate, and an occurrence report would have been issued in accordance with requirements established in TFC-OPS-OPER-C-24.

Leakage from an HIHTL (inner hose) into an encasement (outer hose) would have drained to an alarm location and a collection tank. The transfer would have been shut down when the alarm was activated. Response to transfer leak detection alarms and mitigation actions would have been performed in accordance with procedure TO-220-106, *Transfer from 241-C-200 Series Tanks to 241-AN-106.*

## 4.4 CONCLUSION

Based on the available data (presented in Sections 4.2 and 4.3), no evidence of a tank leak occurred during SST C-201 waste retrieval operations. The SST C-201 LDMM program focused on a mitigation strategy to successfully control potential leaks. This strategy included the following:

a. Minimize residual tank waste.
b. Minimize in-tank water use.
c. Minimize standing liquid pools in the tank.
d. Control and monitor additions of water.
e. Visually monitor tank conditions and retrieval operations.
f. Retrieve from the center of the tank out to minimize water accumulation around the tank knuckle.

The goal of the LDMM program for SST C-201, according to the plan set forth in RPP-16525, Rev. 6A, was successfully achieved.

# 5.0 LIMITS OF TECHNOLOGY

HFFACO milestone M-45-00 states in part: "Closure will follow retrieval of as much tank waste as technically possible, with tank waste residues not to exceed ... 30 $ft^3$ in each of the 200 series tanks, or the limit of waste retrieval technology capability, whichever is less." In addition, HFFACO Milestone M-45-00B, which identifies requirements for demonstration retrievals such as the C-201 retrieval, provides in part: "Waste shall be retrieved to the DST system to the limits of the technology (or technologies) selected."

This section presents information on the VRS as it was initially configured and subsequently modified to continue the retrieval operation throughout the SST C-201 waste retrieval campaign in compliance with the Functions and Requirements (RPP-16525, ) and the Process Control Plan (RPP-16945). Compliance with RPP-16525, *C-200-Series Tanks Retrieval Functions and Requirements,* and RPP-16945, *Process Control Plan for the 241-C-200 Series Waste Retrieval System,* was ensured even though the operation of the VRS had to be altered when a portion of the hydraulic system malfunctioned. Manual rotation of the AMS enabled continued waste retrieval operations until the waste retrieval system performance diminished to the point where it was determined by consensus that negligible waste was being removed with each additional batch. At that point the requirements of M-45-00 and M-45-00B were satisfied and retrieval was terminated.

Unless otherwise noted, data in this section was developed in accordance with procedure TFC-ENG-CHEM-P-47, *Single-Shell Tank Retrieval Completion Evaluation.*

## 5.1 IDENTIFYING LIMITS OF TECHNOLOGY

Neither Milestone M-45-00 nor M-45-00B prescribes a basis for determining when a technology has reached the limit of its capability to retrieve waste. Figure 5-1 illustrates the general concept of diminishing returns over time as a waste retrieval activity progresses towards its limit.

**Figure 5-1. Limits of Technology Model.**

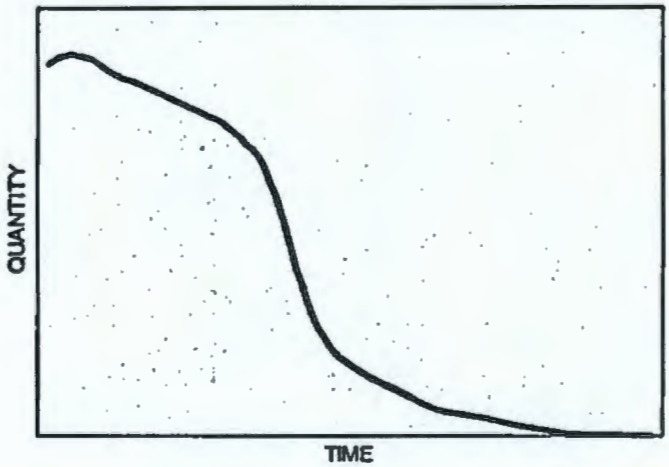

The limits of technology model (Figure 5-1), shows that during the early part of the hypothetical campaign, efforts are focused on optimizing the efficiency of the technology. During the middle period, the operational parameters are in place and relatively large volumes of waste are removed efficiently.

In later stages, the small volume of waste remaining causes the retrieval operation to use additional fluid to mobilize the remaining waste and thus more operating time is required in relation to the volume of waste recovered. In the final days, the quantity of waste recovered approaches zero (using the same volume of retrieval fluids), indicating that retrieval efficiency has diminished to the point where only a negligible amount or no waste can be retrieved using a selected technology.

## 5.2 DETERMINATION THAT AS MUCH WASTE WAS RETRIEVED AS POSSIBLE USING THE SELECTED TECHNOLOGY

The DOE and CH2M HILL relied on the following three types of data to establish progress towards meeting the limit of the VRS capacity to retrieve waste from SST C-201 and determine when the end of retrieval was reached:

a. Examination of in-tank photos/videos to observe and record the waste surface contours, form, and characteristics.

b. Estimation of retrieval performance efficiency based on comparison of batch SpG measurements.

c. Use of retrieval performance data trends estimated from mass balances to demonstrate that a consistent pattern is present indicating that as much waste has been removed as possible.

### 5.2.1 Results of Visual Observations

A video camera inside SST C-201 allowed operational monitoring of retrieval activities and results throughout the retrieval campaign. Video observation of physical characteristics of the tank and objects in the tank aided in measuring residual waste volume change at the end of retrieval. As retrieval progressed, a reduction in waste volume was observed.

To support subsequent video evaluations, videotapes of the waste surface were taken prior to water additions. The videotapes show a shallow bed of waste with no visible liquid. The surface showed a layer of white or yellow crystalline material overlying dark brown or black waste. The waste appeared evenly distributed on the tank bottom with slight variations in waste height but no observed significant mounds of waste. As discussed in Section 2.0, the tank contains a sludge jet eductor assembly and a cut-off dip tube assembly. The eductor assembly lies on the tank bottom with hoses extending to the top of the tank, and the dip tube assembly stands with one end in the waste and the top leaning on the wall across the tank.

During tank SST C-201 retrieval, the ability to hydraulically rotate the AMS was lost when the rotation "locked-up" during operation. Once the ability to hydraulically rotate the VRS was lost,

a mechanical approach to positioning the arm was used. This manual rotation technique partially overcame the inability of the AMS to hydraulically rotate the head.

For each rotational position, the AMS could retrieve in a line across the tank bottom. This coupled with using the scarifier to mobilize waste adjacent to the path of the AMS suction head allowed a path two to three times the width of the AMS head to be influenced. In general terms, the AMS was rotated to a selected position, retrieval was performed along the line accessible to the AMS, the AMS was rotated to another position, and the process repeated. Figure 5-2 shows the locations of the AMS positions used. Table 5-1 provides a chronological summary of the retrieval operations by operational day once the manual rotation was instituted.

**Figure 5-2. Location of Vacuum Retrieval System Positions (Manual Rotations).**

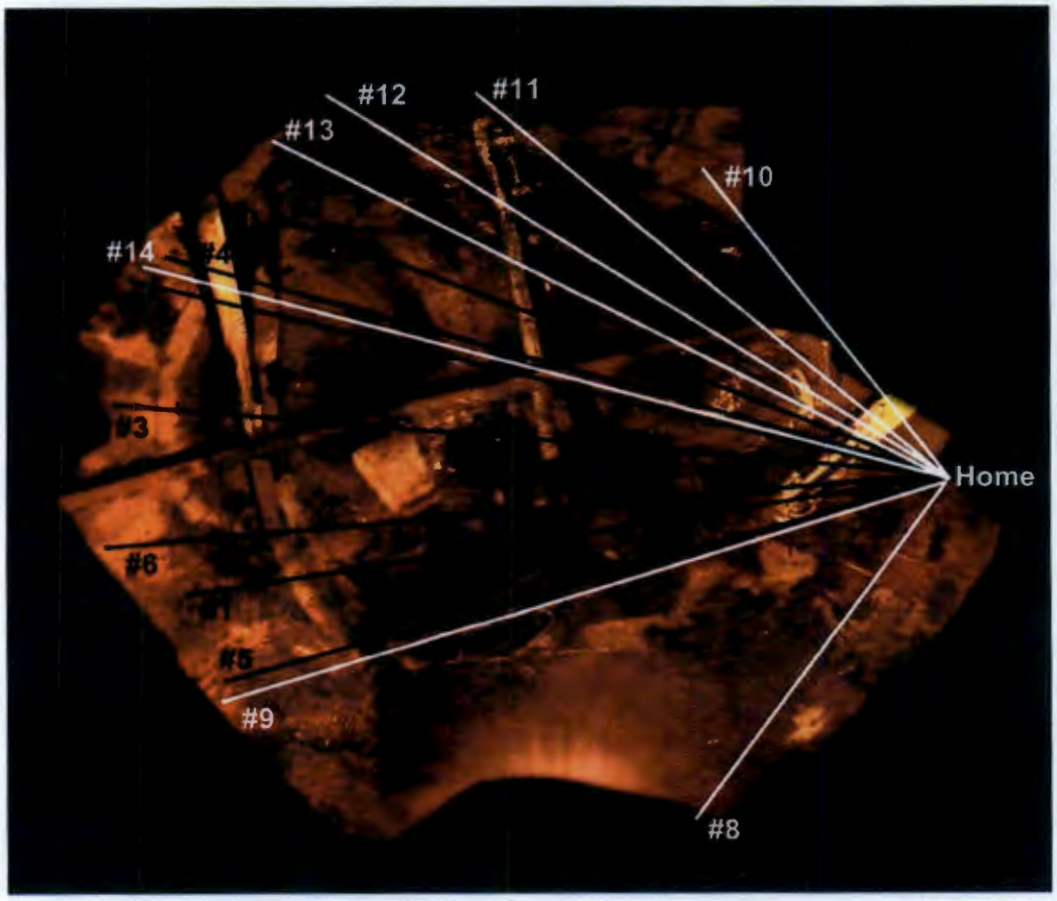


CHG0603-01

Retrieval in AMS positions 1 through 7 was performed from January 15 to February 16, 2006. Following evaluation of the tank and a decision to continue retrieval, retrieval in AMS positions 8 through 14 was performed from March 8 to 23, 2006, to complete retrieval.

As noted above, the manual rotations of the AMS necessitated a more systematic approach to the retrieval, as the hydraulics could not be used to conveniently rotate the AMS back to previously retrieved locations. Solids were retrieved to the extent possible in each AMS position before

moving to the next AMS position. Prior to rotating the AMS, flushes were used to move solids to benefit the next selected AMS position. Use of the scarifier and mast flushes mobilized solids in the areas adjacent to the AMS head and allowed the AMS to influence a wider area than the area immediately below the path of the AMS head.

**Table 5-1. Retrieval Campaign Chronology During Manual Rotation of Arm.**

| Date | Description |
|---|---|
| January 16 to 24, 2006 | Completed batches 30 through 34 with the AMS in its first fixed rotational position (position 1). During this time, troubleshooting of the hydraulic system continued. |
| January 25 to February 6, 2006 | The AMS was manually rotated to its second position and more work on the AMS was performed. A loose wire was found and fixed and a hydraulic pressure control valve was replaced. |
| February 7 to 15, 2006 | Completed batches 35 through 95 with the AMS manually rotated through positions 2 through 7. As a result of the limited AMS rotational movement, water usage was increased considerably with mast flushes being used to wash solids to more accessible areas of the tank. On February 15, it appeared that very little retrievable solids remained in the tank. Final system flushing was performed and retrieval was halted. |
| February 17, 2006 | Based on the evaluation of in-tank videotapes, further waste retrieval from small waste deposits in areas of the tank appeared possible. The decision was made to continue retrieval of SST C-201 to remove more waste. |
| February 21 to March 7, 2006 | Leak detector functional testing and rotation of the mast to position 8 was performed. Resumption of retrieval was delayed until replacements for a failed fuse holder and fuse were obtained. |
| March 8 to 23, 2006 | Completed batches 96 through 128 with the AMS rotated through positions 8 through 14. Solids were dislodged and flushed down from the knuckle and upper parts of the tank dish and batches were retrieved. Although visual observations of the retrieval operations indicated some retrieval of solids in AMS positions 8 through 11, low batch SpGs indicate little, if any, waste retrieval. In AMS positions 12 and 13, the AMS was able to move over the dip tube lying near the tank bottom and access an area with deeper waste; waste retrieval was observed, both visually and via increased SpGs when these areas were retrieved. |
| March 23, 2006 | Determination was made that vacuum retrieval was no longer effective in retrieving waste. Final flushes and videos were performed. |

Figures 5-3, 5-4, and 5-5 show images of the tank bottom taken from a March 23, 2006, videotape. Figure 5-3 shows an overview of the tank bottom, Figure 5-4 shows the east section of the tank bottom, and Figure 5-5 shows the waste section of the tank bottom with the central portion of the tank in the foreground. As the figures indicate, the remaining liquid was removed to the extent possible (a small pool of liquid can be seen in Figure 5-4) and much of the steel tank bottom is visible. The remaining waste consists of light and dark granular material distributed in a thin layer on the tank bottom. The welds along the plates that form the curved haunch of the tank and the welds just below the top of the tank dish are visible in the images.

**Figure 5-3. Single-Shell Tank 241-C-201 Overview of Tank Bottom.**

**Figure 5-4. Single-Shell Tank 241-C-201 East Section of Tank Bottom.**

**Figure 5-5. Single-Shell Tank 241-C-201 West Section of Tank Bottom.**

### 5.2.2 Trend in Specific Gravity of the Waste Slurry

The SpG of undiluted waste from SST C-201 was substantially higher than the SpG of water used to transport the waste. Water, however, composed most of the waste slurry volume. Initially, the composite SpG of the slurry was higher than the SpG of water but lower than the SpG of undiluted waste. As the volume of retrieved waste diminished over time, the SpG of the slurry declined until it approximated the SpG of water.

Figure 5-6 shows the slurry SpG for each batch. The Coriolis meter measures the relative density (because water with an SpG of 1.0 is being used as reference material, the relative density is equal to the specific gravity) of the slurry as it is being pumped to DST AN-106. Specific gravities remained below 1.1 throughout the retrieval of SST C-201.

Waste along AMS position 1 (batches 31 through 34) was retrieved in a manner similar to the previous batches in that a minimum amount of water was added. This resulted in SpGs for this AMS position that were consistent with previous batches. As the amount of waste available to be retrieved in the line of the AMS was reduced on the path of AMS position 1, the SpG decreased as anticipated. This general behavior of higher to lower SpG from the first to the last batch was observed for most of the subsequent AMS positions.

Following repositioning of the mast to AMS position 2 (batches 35 through 52), the retrieval approach was adjusted when it was realized that a greater area of the tank bottom could be affected with the use of more water through the scarifier and mast flushes. This change in retrieval approach resulted in a lower starting SpG for each batch but had the desired effect of

mobilizing a greater volume of waste from the area adjacent to the AMS path. This approach was used very effectively for AMS positions 2 through 5 (batches 35 through 83) to remove the bulk of the remaining waste. At each AMS position, batches were retrieved until visual observations indicated that no further waste would be recovered from that position. A measurable quantity of waste (~10 gal) was removed from the tank in AMS positions 6 through 14 (batches 84 through 128); however, the purpose of these positions was to clean up small areas not removed during the bulk retrieval or to retrieve areas that were not reached during AMS positions 2 through 5.

**Figure 5-6. Waste Retrieval Performance: Slurry Specific Gravity by Batch.**

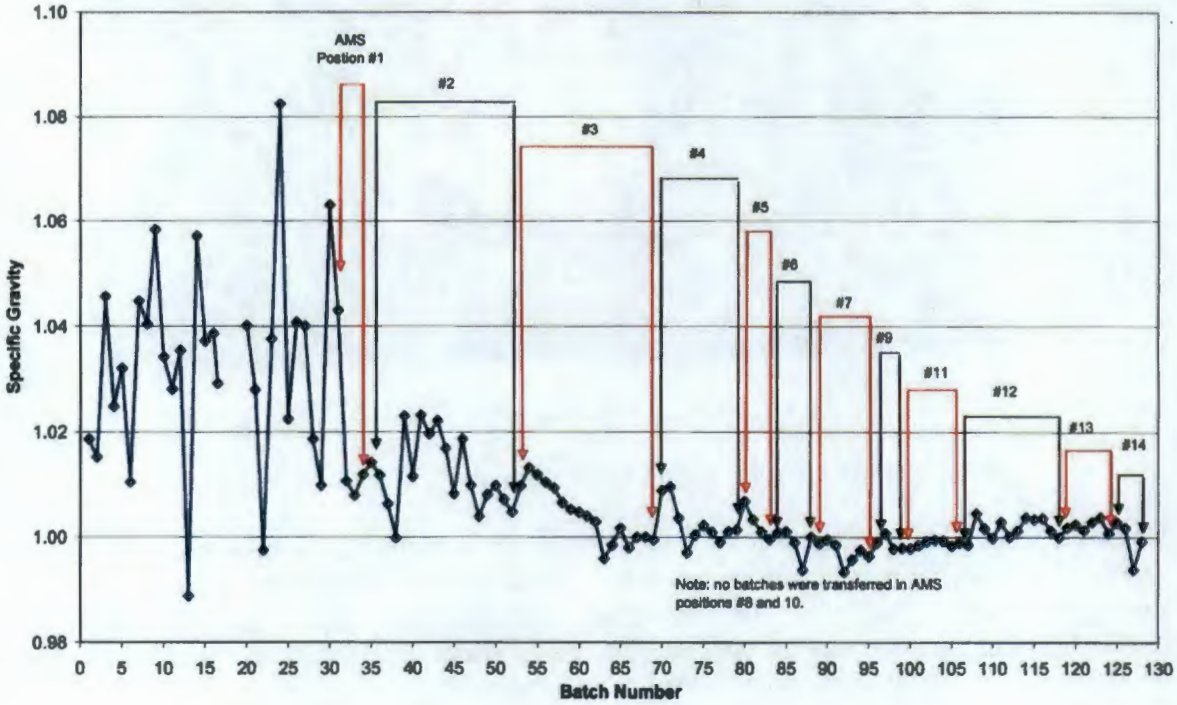


### 5.2.3 Waste Retrieval Progress

Waste retrieval progress as a function of operating shifts is shown in Figure 5-7. As shown in Figure 5-7, multiple batches of waste were transferred during some shifts and no batches were transferred during others. The volume of waste retrieved per shift was estimated from a mass balance using the volume and density of the slurry transferred to DST AN-106 and the density of the SST C-201 waste. Waste retrieval progressed fairly steadily until shift 24 when the volume of waste retrieved began to level off. No measurable progress was made from shifts 26 to 32 (AMS positions 5 through 11). Some waste was retrieved during shifts 33 to 35 (AMS positions 12 and 13) when the AMS was able to reach waste containing areas that were previously thought to be inaccessible because of the location of in-tank equipment.

**Figure 5-7. Waste Retrieval Progress.**

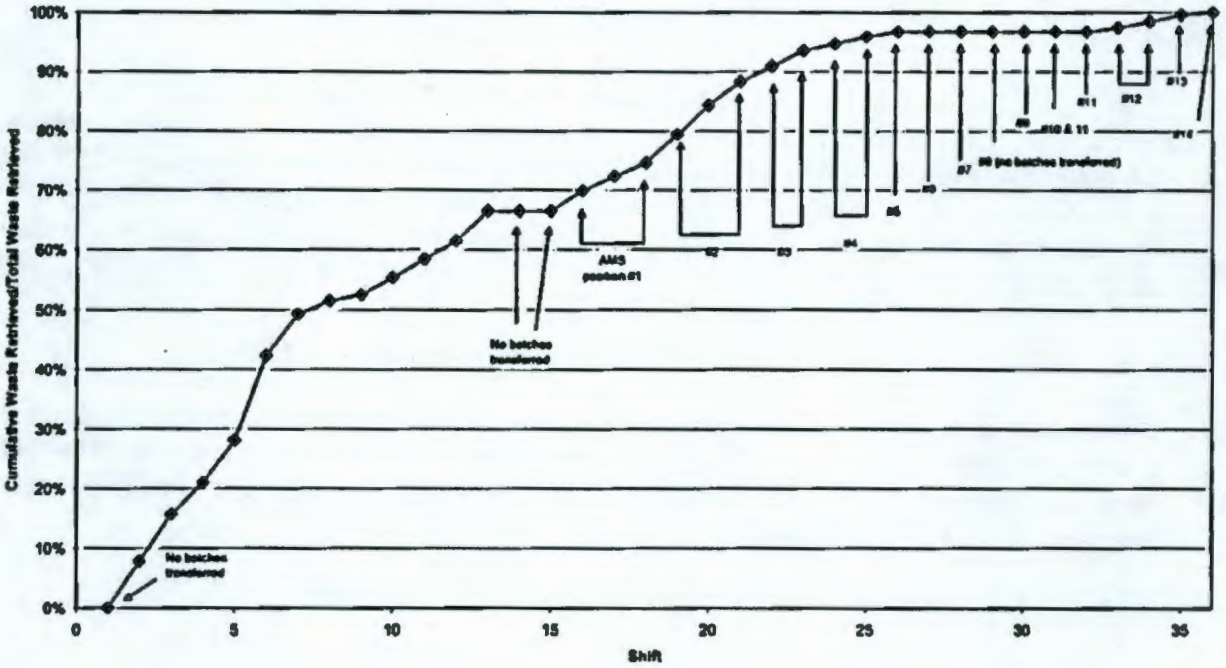


## 5.3 CONCLUSION

Through consensus based on visual observations of the system effectiveness and decrease in slurry SpG for each retrieval location (AMS position), it was determined that waste retrieval operations in SST C-201 could be terminated and the limits of technology had been reached for the configuration of the AMS as deployed. At the end of waste retrieval operations, the waste remaining in the tank was estimated to be less than 25 $ft^3$ with less than 12 $ft^3$ on the bottom of the tank. The residual waste volume was subsequently measured and documented using the video camera/CCMS to be 19.2 $ft^3$ total residual waste including 10.7 $ft^3$ on the bottom of the tank (see Section 6.0).

Management from Operations, Engineering, and Projects concurred that the retrieval had reached the limit of effectiveness for removing waste from SST C-201 with the altered technology deployed. DOE was briefed and concurred. The retrieval was stopped and equipment decontamination flushes were completed.

# 6.0 SINGLE-SHELL TANK 241-C-201 RESIDUAL WASTE VOLUME MEASUREMENT

This section presents the residual waste volume measurement process and the results for SST C-201. The post-retrieval measurement of the residual waste volume was performed using the method described in RPP-23403. The total measured volume of residual waste in SST C-201 was the sum of volumes remaining in the tank dish, on tank walls, on the stiffener ring, and in the void spaces in equipment left in the tank. This measurement established that the volume of the waste remaining in SST C-201 was 19.2 $ft^3$, with an upper bounding limit of 20.5 $ft^3$.

## 6.1 RESIDUAL WASTE VOLUME MEASUREMENT PROCESS

The waste volume measurement approach is summarized in Sections 6.1.1 through 6.1.3 and is described in RPP-29441. The CCMS method was used to calculate the volume remaining in the tank dish. The waste volumes remaining on the tank wall, stiffener ring, and in void spaces were estimated using video observations, records, and equipment drawings.

### 6.1.1 Video Camera/Computer-aided Design Modeling System

To implement the CCMS method, an in-tank video of SST C-201 was recorded on March 23, 2006. The video documented the location of residual solids and liquid waste remaining in the tank. The video was taken by a camera located in Riser 5 at heights of approximately 16 ft, 9 ft, and 4 ft above the bottom of the tank. Figure 6-1 presents a section view of SST C-201 showing representative camera elevations used for the March 23 video.

*Autodesk® Land Desktop*,[3] Release R16.0 software was used as part of the CCMS approach. Using the software, a 3-D model of the SST C-201 interior was built, volumes of residual waste formations in the bottom dish were modeled and determined, and a digital terrain model of the waste surface was built that was used to determine the overall volume of residual waste in the dish.

Once the residual waste volume in the bottom of the dish is determined, the 95% upper confidence level (UCL) is determined using the following statistically based equation:

$$\textit{Actual Waste Volume @ 95\% UCL, } ft^3 = 1.043 \times \textit{CCMS In-Tank Volume Est. } ft^3 + 0.852\, ft^3$$

The development of this regression equation is described in RPP-RPT-22891, *Revised Methodology to Calculating Residual Waste Volume at 95% Confidence Interval*, and has been adopted in RPP-23403.

### 6.1.2 Estimation of Waste Remaining on Tank Surfaces and in Equipment

The volume of waste remaining on the walls and stiffener ring was estimated by video observations.

[3] Autodesk® Land Desktop is a registered trademark of Autodesk, Inc., San Rafael, California.

**Figure 6-1. Single-Shell Tank 241-C-201 Section View Showing Camera Elevations Used in March 23, 2006, Video Recording.**

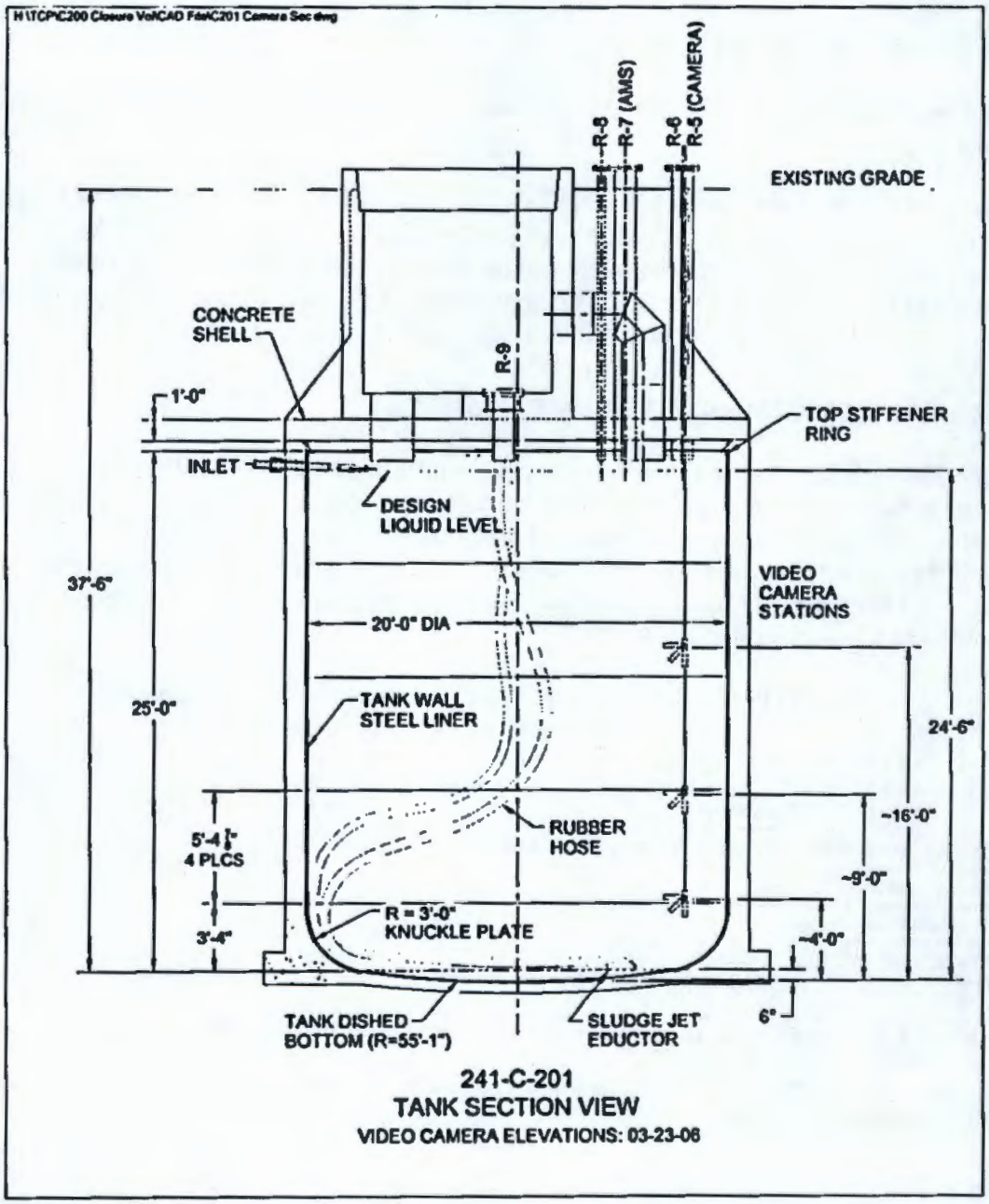


The March 23, 2006, video recording showed that small amounts of waste remained on the SST C-201 wall. The total amount of waste on the wall, including the knuckle, was estimated by calculating the average waste thickness and percentage of waste coverage on the wall.

SST C-201 has a single stiffener ring located at the top of its steel liner, 25 ft 6 in. above the bottom of the tank (see Figure 6-1). A visual examination of the stiffener ring was conducted to determine the presence and size of any waste clumps or waste film on the ring.

### 6.1.3 Estimation of Waste in Equipment

The waste remaining in in-tank equipment was estimated using the March 23, 2006, video recording.

The only pieces of equipment left in SST C-201 that had void space potentially containing waste were the AMS, a cut-off dip tube assembly, and a sludge jet eductor. The volume of residual waste left in this equipment was calculated by using (1) the in-tank video, (2) records identifying equipment remaining in the tank, (3) equipment drawings, and (4) process knowledge to estimate the dimensions of equipment and void spaces as well as debris.

## 6.2 RESIDUAL WASTE VOLUME RESULTS

RPP-23403 defines the final residual waste volume as the residual waste volume in the tank dish at the 95% UCL (equation shown in Section 6.1) plus the actual residual waste volume on the stiffener rings, equipment void space, and tank walls. Using this definition, the upper bounding limit for post-retrieval waste in SST C-201 is estimated to be a volume no greater than 20.5 $ft^3$. Table 6-1 presents the total post-retrieval volume together with waste volumes associated with various tank components.

**Table 6-1. Single-Shell Tank 241-C-201 Total Waste Volume and Component Waste Volumes.**

| Component | Waste Volume ($ft^3$) | 95% UCL ($ft^3$) |
|---|---|---|
| In the bottom (dish) of the tank (solids and liquids) | 10.7 | 12.0[a] |
| In equipment in the tank | 3.4 | N/A |
| On the stiffener ring | 0 | 0 |
| On the tank wall | 5.1 | N/A |
| Total | 19.2 | 20.5[b] |

[a] RPP-23403 estimated error for waste in bottom of tank is calculated using volume at 95% upper confidence level, $ft^3$ = 1.043 x volume, $ft^3$ + 0.852 $ft^3$.

[b] Total of upper bounding estimate for volume in dish bottom and waste volumes for other components.

UCL = upper confidence level

Residual solids in the tank bottom appeared uniformly spread out, covering approximately an 11-ft-diameter area of the dish at a thickness of approximately 1.25-in. One small pool of liquid was observed near the center of the tank on top of the solid waste layer. Table 6-2 shows the volumes of solids and liquids estimated by the CCMS.

**Table 6-2. Single-Shell Tank 241-C-201 Waste Volume in Tank Bottom.**

| Component | Waste Volume ($ft^3$) |
|---|---|
| Solid phase | 10.5 |
| Supernate phase | 0.2 |
| Total | 10.7 |

The post-retrieval tank waste contour map (Figure 6-2) shows the configuration of residual waste in the dish bottom. The SST C-201 isometric model (Figure 6-3) portrays the volume of the residual waste in relation to the volume and configuration of the bottom dish and tank knuckle regions of SST C-201.

Figures 6-4 through 6-7 are still pictures taken from the March 23, 2006, video. Figure 6-4 shows an overview of the tank bottom while Figures 6-5 and 6-6 show close up views of the tank bottom taken at lower camera elevations. Figure 6-7 shows a portion of the tank wall.

On completion of retrieval, the AMS was flushed and drained to remove any waste. It was estimated that no residual waste was left in the AMS.

Before the waste retrieval campaign began, the dip tube assembly had been cut off and leaned across the tank with its bottom in the waste and top resting on the tank wall. During retrieval, the dip tube assembly lay across the tank with both ends resting on the tank knuckle, above the waste and away from retrieval activity. The sludge jet eductor is installed in Riser 9 and consists of hoses that extend down to and across the bottom of the tank with a jet eductor attached to the end of the hoses. Based on the tank process history, the volume of residual waste that could be in the dip tube assembly and sludge jet eductor assembly void space was estimated to be 3.4 $ft^3$. As provided for in RPP-23403, this estimate of the waste volume in the equipment represents a best estimate of the actual waste volume and deviates from the basic assumption that the void spaces are completely filled with waste. The calculation of the waste volume contained in equipment is provided in RPP-29441, Appendix B.

Other in-tank equipment, which includes a large number of steel tapes and cables, a concrete core from earlier construction activities on the tank, plastic sheeting, and rags was assumed to contain no waste.

Evaluation of the March 23, 2006, video indicated that small amounts of waste were spattered on the tank wall from previous sluicing and retrieval operations. The average thickness of this waste was estimated to be 1/16-in., based on the contrast of shadows cast in the video recording with the camera light. The percentage of tank wall above the dish covered by waste was conservatively estimated at 65%. An upper bounding percentage of wall covered was estimated at 70%. The 70% uncertainty is not additive with the upper bounding estimate for residual waste in the tank bottom because the two figures were calculated by numerically and qualitatively different methods. The volume of waste on the tank wall was estimated to be 5.11 $ft^3$.

SST C-201 has a single stiffener ring located 25 ft 6 in. above the tank bottom at the top of the tank liner. The tank overflow lines are located 1 ft below the stiffener ring, at 24 ft 6 in. above

the tank bottom. The maximum historic level for waste stored in the tank was 24 ft. No waste was observed on the stiffener ring, and no waste is assumed to remain on it.

**Figure 6-2. Single-Shell Tank 241-C-201 Post-Retrieval Tank Waste Contour Map.**

C-201 Post-Retrieval Tank Waste Volume Table: Unadjusted

| Site | Stratum | Surf1 | Surf2 | Cut cu.m. | Fill cu.m. | Net cu.m. | Method |
|---|---|---|---|---|---|---|---|
| SOLIDS: | | | | | | | |
| C201Final | C201FinalVol | Existing | FinalVol1 | 0.000 | 0.297 | 0.297 (F) | Grid |
| LIQUIDS: | | | | | | | |
| C201Liquid | C201Liquids | FinalVol1 | Liquid1 | 0.000 | 0.007 | 0.007 (F) | Grid |

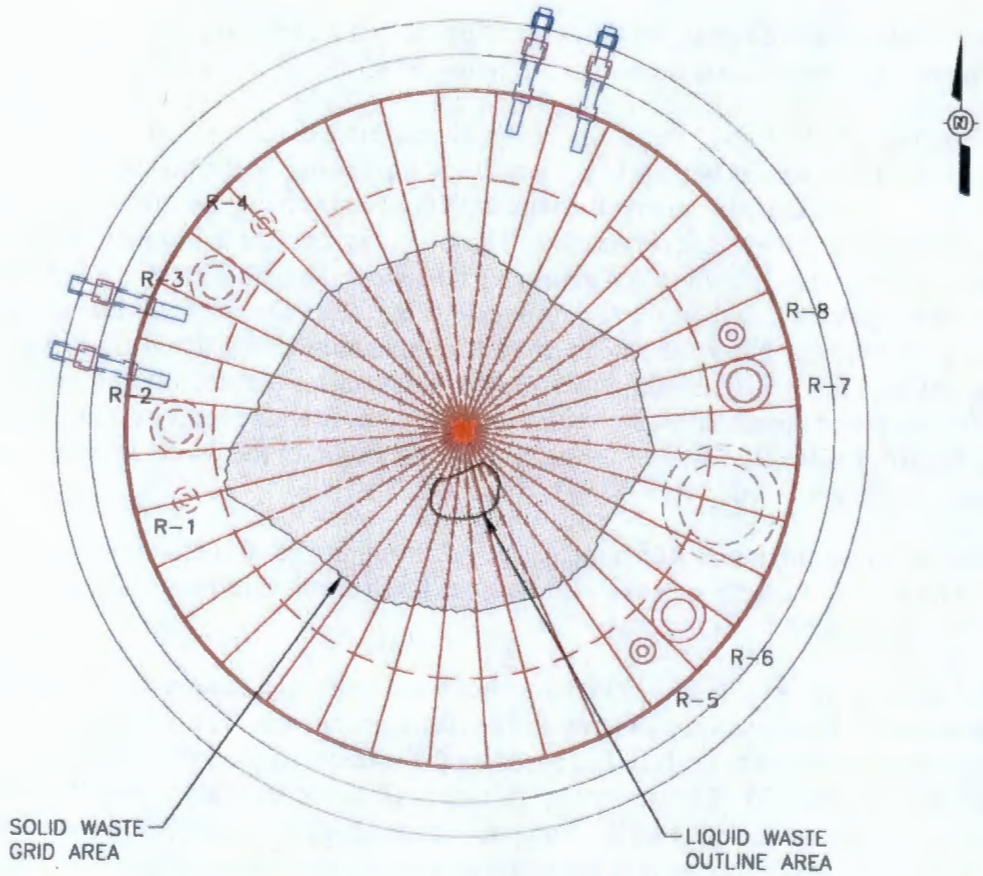

**Figure 6-3. Single-Shell Tank 241-C-201 Post-Retrieval Tank Waste Digital Terrain Model.**

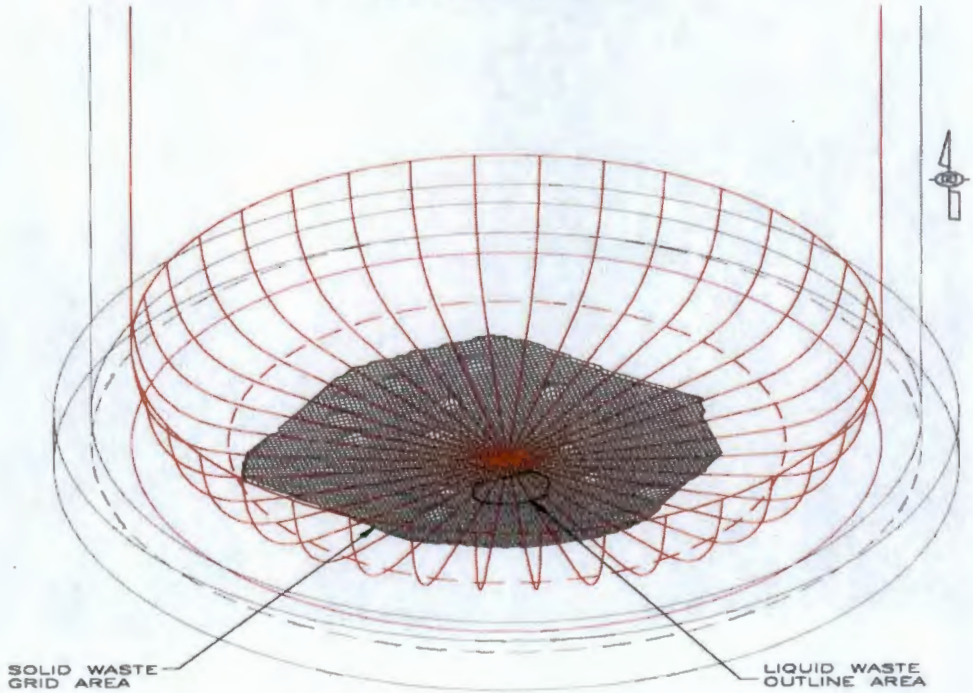


**Figure 6-4. Single-Shell Tank 241-C-201 Bottom from Camera Elevation of Approximately 16 Feet on March 23, 2006.**

**Figure 6-5. Single-Shell Tank 241-C-201 Bottom from Camera Elevation of Approximately 9 Feet on March 23, 2006.**

**Figure 6-6. Single-Shell Tank 241-C-201 Bottom from Camera Elevation of Approximately 4 Feet on March 23, 2006.**

**Figure 6-7. Single-Shell Tank 241-C-201 Wall from Camera Elevation of Approximately 16 Feet on March 23, 2006.**

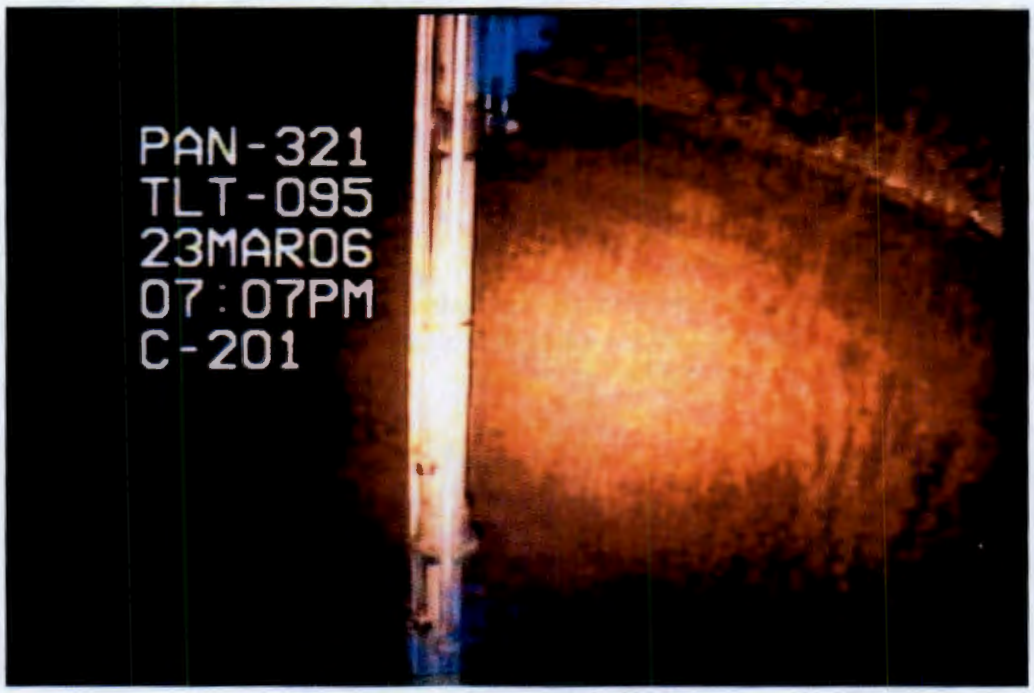


## 6.3 CONCLUSION

The calculated volume of residual waste in SST C-201 is 19.2 $ft^3$. The upper bounding estimate of the residual waste volume is 20.5 $ft^3$. Even using the upper bounding limits for residual waste, the total residual waste volume in SST C-201 is well below 30 $ft^3$.

In addition, the calculated residual volume in the tank dish is consistent with a preliminary engineering estimate performed at the conclusion of retrieval operations.

# 7.0 RESIDUAL TANK WASTE CHARACTERIZATION

This section describes the results of post-retrieval residual tank waste characterization for SST C-201. Two statistical estimates of post-retrieval residual waste inventory based on laboratory analysis of waste samples taken prior to the start of retrieval are presented: an average and a 95% UCL inventory. Sampling the post-retrieval residual waste was not possible because there was insufficient residual waste directly under a riser; therefore, as provided in RPP-16616, *Component Closure Action Data Quality Objectives for the C-200 Series Tanks*, results of the pre-retrieval samples are used to support the post-retrieval inventory calculation.

The calculated post-retrieval inventories will be used as input for calculating the potential risk to human health that arises from the residual waste. In addition, an average pre-retrieval inventory was calculated. This pre-retrieval inventory is provided for health risk comparison purposes. This risk assessment is discussed in Section 8.0.

## 7.1 SAMPLING AND ANALYSIS OF RESIDUAL WASTE

The following two documents provide guidance and requirements for sampling and analysis of the pre-retrieval waste:

a. RPP-16616, *Component Closure Action Data Quality Objectives for the C-200 Series Tanks*. This DQO document is a predecessor of RPP-23403 prior to the decision to have a single DQO for all single-shell tank component closure activities. The documents describe the sampling and analysis strategy developed by implementing the DQO process to ensure appropriate data are collected to support closure activities.

b. RPP-17137, *Sampling and Analysis Plan for the C-200 Series Tanks Component Closure Action*. This document summarizes the sampling and analysis requirements in the DQO and provides additional guidance and clarification for satisfying the requirements.

Collection and analysis of the SST C-201 pre-retrieval waste samples and calculations of the constituent pre- and post-retrieval inventories based on the sample results are described in RPP-RPT-29889, *Tank 241-C-201 Residual Waste Inventory Estimates for Component Closure Risk Assessment*, and summarized in Sections 7.2 through 7.4.

## 7.2 SAMPLING AT SST C-201

The finger trap method was used to obtain samples of waste in SST C-201 prior to retrieval. This is one of two methods considered acceptable for collecting samples of residual solids in a tank (RPP-23403). Sampling of the pre-retrieval waste in SST C-201 was conducted in December 2003. SST C-201 was sampled through two risers but samples taken from one riser were empty because there were insufficient solids on the tank bottom directly under the riser. Finger trap samples taken from SST C-201 were combined to form a composite. Duplicate analyses of each constituent were performed on the composite. The composite samples were analyzed in accordance with the guidance documents.

## 7.3 SAMPLE ANALYSES

The 222-S Laboratory at Hanford used 20 analysis techniques to obtain the concentration of various organic constituents, inorganic constituents, and radionuclides. A list of the techniques is presented in Table 7-1. Analysis of the samples resulted in concentration estimates for 158 constituents in the SST C-201 residual waste. Analytical results were reported in RPP-21084, *Final Report for Tanks 241-C-201, 241-C-202, 241-C-203, and 241-C-204 Solid Grab Samples*. Density of the C-201 pre-retrieval samples could not be measured because the dry solids contained air pockets that could cause inaccuracy in the measurements. Density data from SST C-201 samples taken in 1997 were used (HNF-13832, *Tank 241-C-201 Archive Samples in Support of Retrieval Performance Evaluation Analytical Results for the Final Report*). Electronic data were also loaded into TWINS.

The 222-S Laboratory maintains a quality assurance program to ensure data quality. The SST C-201 samples were analyzed according to quality assurance plans established by the program. In addition, the DQOs specify quality control criteria (e.g., standard recovery, matrix spike recovery, relative difference between duplicate analyses) that are specific to the closure project. The DQOs also provide direction for addressing data that do not meet the criteria. Results for most constituents satisfied the DQO criteria; those that did not meet the criteria were addressed according to the direction provided in the DQOs. Therefore, the sample data were judged acceptable for use in the risk assessment.

## 7.4 CALCULATION OF RESIDUAL INVENTORY

The DQO (RPP-16616) allows the use of pre-retrieval sample results and post-retrieval waste volume to estimate the residual waste inventory when post-retrieval sampling cannot be accomplished. Since it was not possible to collect a post retrieval sample from SST C-201, an evaluation was done to determine the applicability of pre-retrieval samples to post-retrieval waste. The assessment determined the following:

a. More water was used during the actual retrieval than anticipated, resulting in the selective removal of soluble constituents.

b. The VRS appeared to be more effective in removing lighter, more easily suspended solids.

c. Samples taken from SST C-202 prior to and after completion of retrieval indicate concentrations of some constituents changed significantly during retrieval.

Therefore, it was concluded that the SST C-201 pre-retrieval samples are not directly applicable without modification. The sample data must first be adjusted to account for changes in composition due to retrieval before they can be used in the calculations of post-retrieval inventory.

**Table 7-1. SST C-201 Pre-Retrieval Sample Analysis Techniques.**

| Analysis Technique | SW-846 Method | Constituents |
|---|---|---|
| **Inorganic Analyses** | | |
| pH measurement | 9045C | pH |
| Ion selective electrode | 9215 | Sulfide |
| Thermogravimetric analysis | Not applicable | Weight percent water |
| Spectrophotometric | 9014 | Cyanide |
| Cold vapor atomic absorption | 7471A | Mercury |
| Ion chromatography | EPA 300.7 | Ammonium |
| Ion chromatography | 9056 | Anions |
| Inductively coupled plasma/mass spectrometry | 6020 | Uranium, neptunium, thorium isotopes, Technetium-99 |
| Inductively coupled plasma/atomic emission spectrometry | 6010B | Cations (metals) |
| **Radiochemical Analyses** | | |
| Gamma energy analysis | Not applicable | Gamma energy emitters |
| Separation/Beta counting | Not applicable | Strontium-90 |
| Liquid Scintillation | Not applicable | Carbon-14 |
| Separation/gamma energy analysis | Not applicable | Iodine-129 |
| Liquid scintillation | Not applicable | Selenium-79 |
| Liquid scintillation | Not applicable | Tritium |
| Alpha energy analysis | Not applicable | Alpha-energy emitters |
| Liquid scintillation | Not applicable | Nickel-63 |
| **Organic Analyses** | | |
| Volatile organic analysis by gas chromatography/mass spectrometry | 8260B | Volatile organic compounds |
| Semivolatile organic analysis by gas chromatography/mass spectrometry | 8270C | Semivolatile organic compounds |
| Gas chromatography/electron capture detection | 8082 | Polychlorinated biphenyls |

Notes:
EPA = U.S. Environmental Protection Agency
SW-846 = SW-846, *Test Method for Evaluating Solid Waste, Physical/Chemical Methods*

SST C-201 and SST C-202 contained wastes that were generated by the same process. RPP-15408 reports that the two tanks received radioactive waste from the solvent extraction process conducted in the Hot Semi-Works facility from May 1955 to May 1956. A comparison of results of samples taken from these two tanks confirms the process knowledge. Contents of the two tanks were retrieved using the same method. Therefore, it is expected that concentration of individual waste constituents also changed in a similar manner due to retrieval. Changes in SST C-201 composition can be approximated by calculating a ratio of post-retrieval to

pre-retrieval concentrations for each SST C-202 constituent. Concentrations of SST C-201 post-retrieval waste constituents were then estimated by multiplying the pre-retrieval concentrations to the SST C-202 post-retrieval/pre-retrieval ratios. Estimates of average concentrations and uncertainty in the post-retrieval waste constituents (presented as relative standard deviation) are shown in Appendix A, Table A-1.

The SST C-201 waste inventories were calculated by following the BBI process as described in RPP-7625, *Best Basis Inventory Process Requirements*. Two post-retrieval inventories were calculated: an average inventory based on average concentrations, density, and volume, and a bounding inventory at the 95% UCL. In addition, a pre-retrieval inventory was calculated for future comparisons of health risks.

Analytical data and the statistical model used for estimating the means and standard deviations for concentration, density, and waste volumes are discussed in RPP-RPT-29889. For constituents that had concentrations below the detection limits, the value of the detection limits were used for calculating the mean concentrations. In accordance with BBI protocol, the relative standard deviations for nondetected constituents are assumed to be 100% (RPP-6924, *Statistical Methods for Estimating the Uncertainty in the Best-Basis Inventories*).

The 95% UCL inventory is an upper-bounding estimate of the inventory; it was calculated using a statistical method described in RPP-6924. The input for this calculation includes the means and standard deviations for sample concentrations, sample density, and total residual waste volume. Details of the method and formula used for deriving this inventory are described in RPP-RPT-29889.

The average pre-retrieval inventory was calculated by multiplying pre-retrieval concentrations, density, and waste volume. Details of the method and formula used for deriving this inventory are described in RPP-RPT-29889. The SST C-201 pre-retrieval waste volume was assumed to be 115.2 $ft^3$ (BBI update as of October 1, 2005).

The SST C-201 average post-retrieval waste inventory and the 95% UCL post-retrieval waste inventory are shown in Appendix A, Tables A-2 and A-3. The average pre-retrieval waste inventory is provided in Appendix A, Table A-4.

# 8.0 POST-RETRIEVAL SINGLE-SHELL TANK 241-C-201 RISK ASSESSMENT

The potential impacts to human health posed by the residual waste in SST C-201 were calculated using the methodology documented in DOE/ORP-2005-01, *Single-Shell Tank Performance Assessment*. Figure 8-1 provides a schematic of the process used for the SST C-201 risk assessment, and this methodology is described in detail in Chapter 3 of DOE/ORP-2005-01. It should be noted that the DOE/ORP-2005-01 methodology supersedes the WMA C risk assessment methodology provided in RPP-13774, *Single-Shell Tank System Closure Plan.*

As noted above, the risk assessment results presented in this RDR were developed using the same methodology as that used in DOE/ORP-2005-01. However, the inventory used for the source term in DOE/ORP-2005-01 was replaced with the average inventory and 95% UCL inventory discussed in Section 7.0 and discussed in detail in RPP-RPT-29889, *Tank 241-C-201 Residual Waste Inventory Estimates*. The source terms presented in this RDR will be incorporated into future revisions of DOE/ORP-2005-01 and the WMA C performance assessment (PA).

Impacts were calculated using the average and 95% UCL inventory. Results show that for the groundwater pathway the impacts associated with SST C-201 were 2 to 4 orders of magnitude below performance objectives for both the average and 95% UCL inventory. For all inadvertent intruder scenarios other than the suburban garden scenario (a sensitivity case) at 100 years and 500 years after closure, the doses associated with SST C-201 were below performance objectives. For the suburban garden scenario, doses at 100 years exceeded the performance objectives by a factor of 3 for the average inventory and a factor of 4.5 for the UCL 95% inventory. At 500 years after closure, the doses for the suburban garden scenario are below performance objectives for the average inventory but above the performance objective for the UCL 95% inventory.

In addition to the risk assessment based on the average and 95% UCL inventory discussed above, Appendix B provides the results of a risk assessment based on a pre-retrieval inventory. This risk assessment is being provided for comparison purposes at the request of Ecology because no post-retrieval sample was collected and analyzed..

## 8.1 CONSTITUENTS EVALUATED

This risk assessment is based on the analytical results for 167 constituents [i.e., radionuclides, volatile organic compounds, semivolatile organic compounds, polychlorinated biphenyls, and inorganics (including metals and conventional parameters)] in accordance with approved 222-S Laboratory procedures based on U.S. Environmental Protection Agency (EPA) approved methods. However, analytes flagged as a nondetect were evaluated at one-half the detection limit in accordance with EPA/540/1-89/002, *Risk Assessment Guidance for Superfund Volume I Human Health Evaluation Manual (Part A) Interim Final.* Table 8-1 presents a complete listing of the analytes evaluated, whether or not the analyte was detected, and whether a radiological dose, reference dose, or cancer potency factor is published for that analyte.

**Figure 8-1. Single-Shell Tank C-201 Residual Waste Inventory and Risk Assessment Process.**

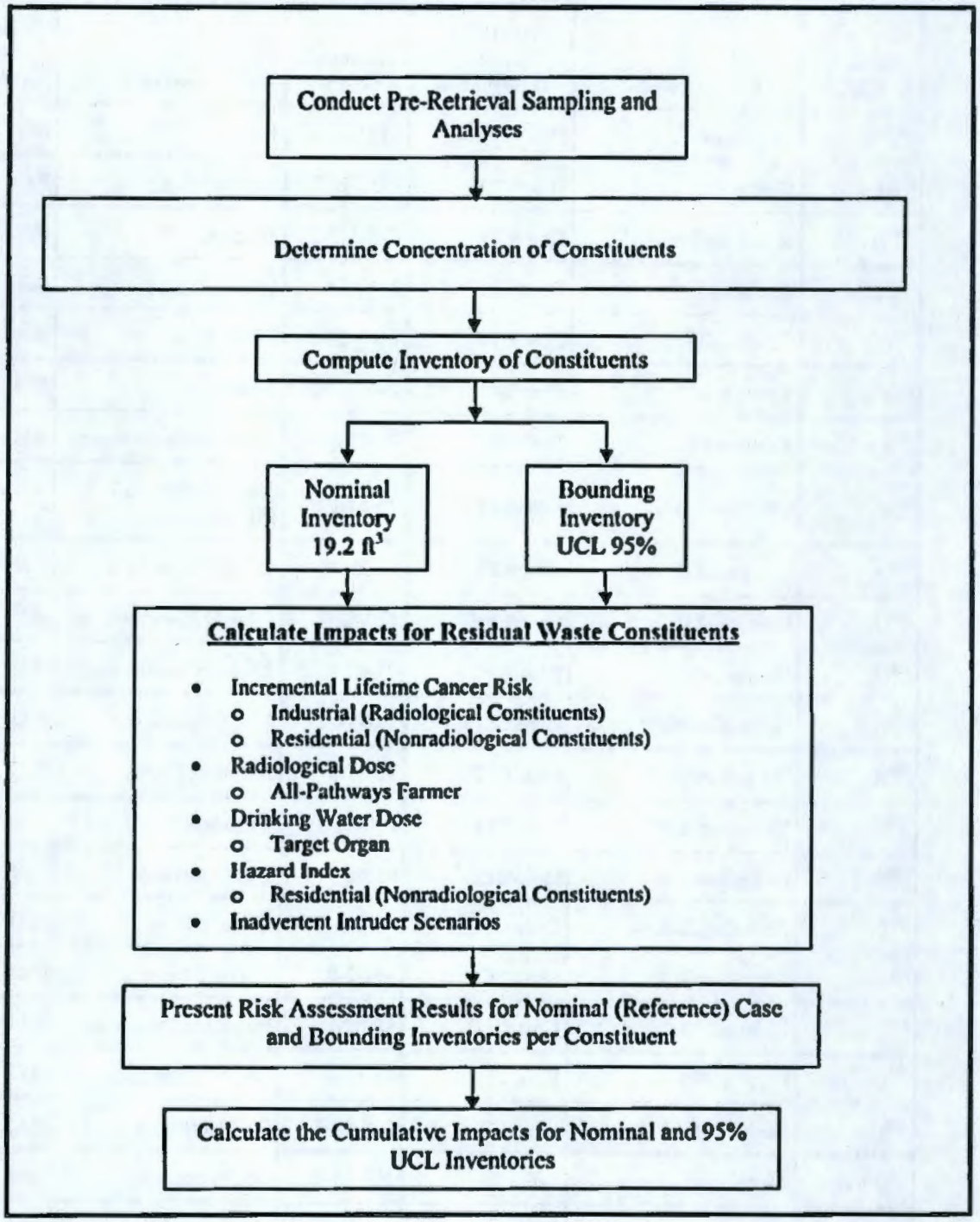

**Table 8-1. List of Analytes and Available Toxicity Information. (4 sheets)**

| Isotope/ CAS | Analyte | Available Toxicity Information | Isotope/ CAS | Analyte | Available Toxicity Information |
|---|---|---|---|---|---|
| $^{14}C$ | Carbon-14 | Dose/CPF | 7439-93-2 | Lithium | Rfd |
| $^{63}Ni$ | Nickel-63 | Dose/CPF | 7439-98-7 | Molybdenum | Rfd |
| $^{90}Sr$ | Strontium-89/90 | Dose/CPF | 7782-49-2 | Selenium | Rfd |
| $^{99}Tc$ | Technetium-99 | Dose/CPF | 7440-22-4 | Silver | Rfd |
| $^{137}Cs$ | Cesium-137 | Dose/CPF | 7440-28-0 | Thallium | Rfd |
| $^{228}Th$ | Thorium-228 | Dose/CPF | 7440-62-2 | Vanadium | Rfd |
| $^{232}Th$ | Thorium-232 | Dose/CPF | 71-55-6 | 1,1,1-Trichloroethane | Rfd |
| $^{233}U$ | Uranium-233 | Dose/CPF | 76-13-1 | 1,1,2-Trichloro-1,2,2-trifluoroethane | Rfd |
| $^{234}U$ | Uranium-234 | Dose/CPF | 75-35-4 | 1,1-Dichloroethene | Rfd |
| $^{235}U$ | Uranium-235 | Dose/CPF | 120-82-1 | 1,2,4-Trichlorobenzene | Rfd |
| $^{236}U$ | Uranium-236 | Dose/CPF | 95-95-4 | 2,4,5-Trichlorophenol | Rfd |
| $^{238}U$ | Uranium-238 | Dose/CPF | 121-14-2 | 2,4-Dinitrotoluene | Rfd |
| $^{237}Np$ | Neptunium-237 | Dose/CPF | 95-57-8 | 2-Chlorophenol | Rfd |
| $^{239}Pu$ | Plutonium-239 | Dose/CPF | 110-80-5 | 2-Ethoxyethanol | Rfd |
| $^{240}Pu$ | Plutonium-240 | Dose/CPF | 95-48-7 | 2-Methylphenol | Rfd |
| $^{241}Pu$ | Plutonium-241 | Dose/CPF | 106-44-5 | Cresol (p) | Rfd |
| $^{241}Am$ | Americium-241 | Dose/CPF | 83-32-9 | Acenaphthene | Rfd |
| $^{242}Cm$ | Curium-242 | Dose/CPF | 85-68-7 | Butylbenzylphthalate | Rfd |
| $^{243}Cm$ | Curium-243 | Dose/CPF | 75-15-0 | Carbon disulfide | Rfd |
| $^{244}Cm$ | Curium-244 | Dose/CPF | 108-90-7 | Chlorobenzene | Rfd |
| 7429-90-5 | Aluminum | Rfd | 108-94-1 | Cyclohexanone | Rfd |
| 7440-39-3 | Barium | Rfd | 60-29-7 | Ethyl ether | Rfd |
| 7440-43-9 | Cadmium | Rfd | 84-74-2 | Di-n-butylphthalate | Rfd |
| 18540-29-9 | Chromium | Rfd | 117-84-0 | Di-n-octylphthalate | Rfd |

**Table 8-1. List of Analytes and Available Toxicity Information. (4 sheets)**

| Isotope/ CAS | Analyte | Available Toxicity Information | Isotope/ CAS | Analyte | Available Toxicity Information |
|---|---|---|---|---|---|
| 7440-48-4 | Cobalt | Rfd | 141-78-6 | Ethyl acetate | Rfd |
| 7440-50-8 | Copper | Rfd | 100-41-4 | Ethylbenzene | Rfd |
| 57-12-5 | Cyanide | Rfd | 206-44-0 | Fluoranthene | Rfd |
| 16984-48-8 | Fluoride | Rfd | 78-83-1 | Isobutanol | Rfd |
| 7439-89-6 | Iron | Rfd | 108-39-4 | Cresol (m) | Rfd |
| 7439-96-5 | Manganese | Rfd | 108-38-3 | Xylene (m) | Rfd |
| 7440-02-0 | Nickel | Rfd | 91-20-3 | Naphthalene | Rfd |
| 14797-55-8 | Nitrate | Rfd | 71-36-3 | 1-Butanol | Rfd |
| 14797-65-0 | Nitrite | Rfd | 98-95-3 | Nitrobenzene | Rfd |
| 7723-14-0 | Phosphorus | Rfd | 95-50-1 | 1,2-Dichlorobenzene | Rfd |
| 7440-24-6 | Strontium | Rfd | 95-47-6 | Xylene (o) | Rfd |
| 7440-31-5 | Tin | Rfd | 108-95-2 | Phenol | Rfd |
| 7440-61-1 | Uranium | Rfd | 106-42-3 | Xylene (p) | Rfd |
| 7440-66-6 | Zinc | Rfd | 129-00-0 | Pyrene | Rfd |
| 78-93-3 | 2-Butanone | Rfd | 110-86-1 | Pyridine | Rfd |
| 67-64-1 | Acetone | Rfd | 108-88-3 | Toluene | Rfd |
| 108-10-1 | Hexone | Rfd | 75-69-4 | Trichlorofluoromethane | Rfd |
| 126-73-8 | Tributyl phosphate | RfD/CPF | 1330-20-7 | Xylenes (total) | Rfd |
| 11097-69-1 | Aroclor 1254 | RfD/CPF | 7440-38-2 | Arsenic | RfD/CPF |
| 14798-03-9 | Ammonium ion by IC | No RfD or CPF | 79-34-5 | 1,1,2,2-Tetrachloroethane | RfD/CPF |
| 7440-69-9 | Bismuth | No RfD or CPF | 79-00-5 | 1,1,2-Trichloroethane | RfD/CPF |
| 7440-70-2 | Calcium | No RfD or CPF | 79-01-6 | Trichloroethene | RfD/CPF |
| 16887-00-6 | Chloride | No RfD or CPF | 107-06-2 | 1,2-Dichloroethane | RfD/CPF |
| 7440-53-1 | Europium | No RfD or CPF | 106-46-7 | 1,4-Dichlorobenzene | RfD/CPF |

**Table 8-1. List of Analytes and Available Toxicity Information. (4 sheets)**

| Isotope/ CAS | Analyte | Available Toxicity Information | Isotope/ CAS | Analyte | Available Toxicity Information |
|---|---|---|---|---|---|
| 7439-92-1 | Lead | No RfD or CPF | 88-06-2 | 2,4,6-Trichlorophenol | RfD/CPF |
| 7439-95-4 | Magnesium | No RfD or CPF | 71-43-2 | Benzene | RfD/CPF |
| 7439-97-6 | Mercury | No RfD or CPF | 56-23-5 | Carbon tetrachloride | RfD/CPF |
| 338-70-5 | Oxalate | No RfD or CPF | 75-01-4 | Vinyl chloride | RfD/CPF |
| 7440-05-3 | Palladium | No RfD or CPF | 67-66-3 | Chloroform | RfD/CPF |
| 14265-44-2 | Phosphate | No RfD or CPF | 75-09-2 | Methylenechloride | RfD/CPF |
| 7440-10-0 | Prascodymium | No RfD or CPF | 87-68-3 | Hexachlorobutadiene | RfD/CPF |
| 7440-18-8 | Ruthenium | No RfD or CPF | 67-72-1 | Hexachloroethane | RfD/CPF |
| 7440-21-3 | Silicon | No RfD or CPF | 87-86-5 | Pentachlorophenol | RfD/CPF |
| 7440-23-5 | Sodium | No RfD or CPF | 127-18-4 | Tetrachloroethene | RfD/CPF |
| 14808-79-8 | Sulfate | No RfD or CPF | 12674-11-2 | Aroclor 1016 | RfD/CPF |
| 7704-34-9 | Sulfur | No RfD or CPF | 24959-67-9 | Bromide | No RfD or CPF |
| 7440-29-1 | Thorium | No RfD or CPF | 7440-45-1 | Cerium | No RfD or CPF |
| 7440-32-6 | Titanium | No RfD or CPF | 12311-97-6 | Formate | No RfD or CPF |
| 7440-33-7 | Tungsten | No RfD or CPF | 7439-91-0 | Lanthanum | No RfD or CPF |
| 7440-67-7 | Zirconium | No RfD or CPF | 7440-00-8 | Neodymium | No RfD or CPF |
| $^{3}H$ | Tritium | Dose/CPF | 7440-03-1 | Niobium | No RfD or CPF |
| $^{60}Co$ | Cobalt-60 | Dose/CPF | 7440-09-7 | Potassium | No RfD or CPF |
| $^{79}Se$ | Selenium-79 | Dose/CPF | 7440-16-6 | Rhodium | No RfD or CPF |
| $^{125}Sb$ | Antimony-125 | Dose/CPF | 7440-17-7 | Rubidium | No RfD or CPF |
| $^{129}I$ | Iodine-129 | Dose/CPF | 7440-19-9 | Samarium | No RfD or CPF |
| $^{152}Eu$ | Europium-152 | Dose/CPF | 18496-25-8 | Sulfide | No RfD or CPF |
| $^{154}Eu$ | Europium-154 | Dose/CPF | 7440-25-7 | Tantalum | No RfD or CPF |
| $^{155}Eu$ | Europium-155 | Dose/CPF | 13494-80-9 | Tellurium | No RfD or CPF |
| $^{230}Th$ | Thorium-230 | Dose/CPF | 7440-65-5 | Yttrium | No RfD or CPF |

**Table 8-1. List of Analytes and Available Toxicity Information. (4 sheets)**

| Isotope/ CAS | Analyte | Available Toxicity Information | Isotope/ CAS | Analyte | Available Toxicity Information |
|---|---|---|---|---|---|
| $^{238}Pu$ | Plutonium-238 | Dose/CPF | 128-37-0 | 2,6-Bis(1,1-dimethylethyl)-4-methylphenol | No RfD or CPF |
| 621-64-7 | N-Nitroso-di-n-propylamine | CPF | 79-46-9 | 2-Nitropropane | No RfD or CPF |
| 11104-28-2 | Aroclor 1221 | CPF | 100-02-7 | 4-Nitrophenol | No RfD or CPF |
| 11141-16-5 | Aroclor 1232 | CPF | 71-50-1 | Acetate | No RfD or CPF |
| 53469-21-9 | Aroclor 1242 | CPF | 1319-77-3 | Cresol | No RfD or CPF |
| 12672-29-6 | Aroclor 1248 | CPF | 666-14-8 | Glycolate | No RfD or CPF |
| 11096-82-5 | Aroclor 1260 | CPF | 59-89-2 | Morpholine, 4-nitroso- | No RfD or CPF |
| 1336-36-3 | Aroclors (Total PCB) | CPF | 88-75-5 | 2-Nitrophenol | No RfD or CPF |
| 7440-36-0 | Antimony | Rfd | 59-50-7 | 4-Chloro-3-methylphenol | No RfD or CPF |
| 7440-41-7 | Beryllium | Rfd | 10061-02-6 | Trans-1,3-Dichloropropene | No RfD or CPF |
| 7440-42-8 | Boron | Rfd | | | |

Notes:
CPF = cancer potency factor available
Dose = radiological dose value available
RfD = reference dose value available
No RfD/CPF = no published information for a reference dose or cancer potency factor for this chemical
Gray shaded area indicates nondetect for this analyte.

## 8.2 RESULTS FOR INDIVIDUAL CONTAMINANTS FOR POST-RETRIEVAL SINGLE-SHELL TANK 241-C-201

Table 8-2 identifies the primary radionuclides that contribute to the incremental lifetime cancer risk (ILCR) (industrial and residential scenarios), groundwater dose [all pathways farmer (APF) scenario], and drinking water dose for the residual waste remaining in SST C-201. Table 8-3 identifies the primary hazardous chemicals that contribute to ILCR and the Hazard Quotient. A complete listing of all analytes for which there is either a dose (radiological), cancer potency factor (radiological and nonradiological), and reference dose (nonradiological) is provided in Tables C-1 and C-2 of Appendix C for the average inventory and C-3 and C-4 for the UCL 95% inventory. In each of these tables, the following columns are provided.

a. **Analyte Name.**

b. **Detect** is an indicator as to whether an analyte was detected in the laboratory.

c. **Inventory.** The inventory shown here for nondetects is calculated at one-half the detection limit.

d. **WMA C Fenceline Peak Concentration** is the maximum modeled concentration for a constituent at the WMA C fenceline over the modeling period. In some cases, individual analytes may not have a corresponding concentration at the fenceline because short-lived radionuclides will decay away before the contaminant can arrive at the WMA C fenceline. Relatively immobile contaminants (i.e., $K_d$ greater than 0.6 mg/L) will also result in a zero concentration at the fenceline as they will not reach the fenceline within 10,000 years (based on assumptions and transport modeling approach used).

e. **Peak Year** is the year in which the simulation estimates that peak concentration for a given analyte arrives at the fenceline.

f. $K_d$ is the mobility factor used in the groundwater modeling for the analyte. The smaller the $K_d$, the more mobile the contaminant; if the $K_d$ is zero, the contaminant moves with the groundwater.

g. **Half-life** is the duration in years for a radionuclide to decay to half its activity. Organic compounds were assumed not to decay (radionuclides only).

h. **ILCR Scenarios** (groundwater) are described in HNF-SD-WM-TI-707, *Exposure Scenarios and Unit Dose Factors for Hanford Tank Waste Performance Assessments*, for the industrial and residential exposure scenarios [including WAC-173-340 Method B (residential)].

i. **Radiological Dose Groundwater** is the estimated drinking water dose for the APF exposure scenario (radionuclides only).

j. **Radiological Dose Beta/Photon** is the drinking water dose for radionuclides using equivalent dose (radionuclides only).

k. **Hazard Quotient Scenarios** are for WAC-173-340 Method B.

## 8.3 CUMULATIVE ANALYSIS RESULTS FOR TANK C-201 AND WASTE MANAGEMENT AREA C

The cumulative analysis for the groundwater pathway (i.e., sum of the risk metrics) for the SST C-201 residual average and 95% UCL risk levels were calculated and are provided in this section.

a. **Nominal Inventory**—best estimate of the residual waste inventory computed using mean pre-retrieval sample concentrations adjusted for the retrieval method (see Section 7.0), mean sample density, and best estimate of the residual volume.

b. **95% Upper Confidence Level Inventory**—considered the bounding inventory. The 95% UCL of the nominal inventory was calculated based on uncertainties associated with the concentration, volume, and density (for solids) measurements (see Section 7.0).

**Table 8-2. Estimated Maximum Incremental Lifetime Cancer Risk/Radiological Dose During the Modeling Period for Primary Radionuclides.**

| Analyte | Detect | Inventory (Ci) | WMA C Fenceline Conc. (pCi/L) | Peak Year | $K_d$ (mL/g)[a] | Half-Life (yr) | Incremental Lifetime Cancer Risk Scenarios (Groundwater)[b] | | Radiological Dose Groundwater (mrem/yr)[b] | Radiological Dose Beta/Photon (mrem/yr)[b] |
|---|---|---|---|---|---|---|---|---|---|---|
| | | | | | | | Industrial | Residential | All Pathway Farmer | Drinking Water |
| $^{99}Tc$ | Yes | 2.66E-03 | 1.06E-02 | 10461 | 0 | 2.11E+05 | 1.46E-10 | 3.56E-09 | 1.86E-05 | 4.72E-05 |
| $^{14}C$ | Yes | 7.76E-04 | 1.20E-03 | 9781 | 0 | 5.73E+03 | 9.28E-12 | 6.71E-11 | 5.79E-06 | 2.39E-06 |
| $^{233}U$ | Yes | 1.41E-05 | 0 | DNA | 0.6 | 1.59E+05 | 0 | 0 | 0 | N/A |
| $^{234}U$ | Yes | 4.54E-02 | 0 | DNA | 0.6 | 2.46E+05 | 0 | 0 | 0 | N/A |
| $^{235}U$ | Yes | 1.92E-03 | 0 | DNA | 0.6 | 7.04E+08 | 0 | 0 | 0 | N/A |
| $^{236}U$ | Yes | 1.09E-03 | 0 | DNA | 0.6 | 2.34E+07 | 0 | 0 | 0 | N/A |
| $^{238}U$ | Yes | 4.55E-02 | 0 | DNA | 0.6 | 4.47E+09 | 0 | 0 | 0 | N/A |
| $^{129}I$ | No | 1.44E-04 | <0.001[c] | 12032 | 0.2 | 1.57E+07 | Dropped[d] | Dropped[d] | Dropped[d] | Dropped[d] |
| Performance objective[e] | | | | | | | 1.0E-6 to 1.0E-4[f] | 1.0E-6 to 1.0E-4[f] | 25[g] | 4[h] |

[a] See PNNL-13895, *Hanford Contaminant Distribution Coefficient Database and Users Guide*, Rev. 1, for the basis for the $K_d$ values listed for the radionuclides.
[b] All exposure scenarios are described in HNF-SD-WM-TI-707.
[c] Simulation predicted contaminant arrives at the fenceline, but at a concentration (0.001 pCi/L) that is much below the minimum detection limit for standard analytical methods.
[d] Dropped from the analysis because the simulation predicted concentration (0.001 pCi/L) is much below the minimum detection limit for standard analytical methods.
[e] Performance objectives apply to the cumulative (i.e., all contaminants) for the entire WMA.
[f] EPA/540/R-99/006, *Radiation Risk Assessment at CERCLA Sites: Q & A, Directive* 9200.4-31P.
[g] DOE O 435.1, *Radioactive Waste Management.*
[h] 66 FR 76708, "National Primary Drinking Water Regulations; Radionuclides; Final Rule."

Notes:
DNA = did not arrive at fenceline within the modeling period
N/A = radionuclide is not a beta/photon emitter
Shaded cells are nondetects and the inventory used in the risk assessment is calculated at one-half the minimum detection limit.

**Table 8-3. Estimated Maximum Value for Incremental Lifetime Cancer Risk and Hazard Quotient for the Primary Hazardous Chemicals. (2 sheets)**

| Analyte | Detected | Inventory (kg) | WMA C Fenceline Concentration (µg/L) | Peak Year | $K_d$ (mL/g)[a] | Incremental Lifetime Cancer Risk Scenarios (Groundwater)[b] | Hazard Quotient Scenarios (Groundwater)[b] |
|---|---|---|---|---|---|---|---|
| Chromium | Yes | 1.23E+01 | 5.05E-02 | 10481 | 0 | No CPF | 1.30E-03 |
| Fluoride | Yes | 2.73E+00 | 1.12E-02 | 10481 | 0 | No CPF | 1.17E-05 |
| Nitrite | Yes | 5.34E-01 | 2.19E-03 | 10481 | 0 | No CPF | 1.37E-06 |
| Nitrate | Yes | 1.37E+00 | 5.62E-03 | 10481 | 0 | No CPF | 2.20E-07 |
| Cobalt | Yes | 8.56E-02 | <0.001[c] | 12032 | 0.1 | No CPF | Dropped[d] |
| 4-Methyl-2-pentanone (MIBK) | Yes | 2.30E-06 | <0.001[c] | 12032 | 0.02 | No CPF | Dropped[d] |
| 2-Propanone (Acetone) | Yes | 1.44E-05 | <0.001[c] | 10481 | 0 | No CPF | Dropped[d] |
| 2-Butanone (MEK) | Yes | 3.99E-06 | <0.001[c] | 10481 | 0 | No CPF | Dropped[d] |
| Tributyl phosphate | Yes | 2.02E+01 | 0 | DNA | 0.6 | 0 | 0 |
| Uranium | Yes | 1.36E+02 | 0 | DNA | 0.6 | No CPF | 0 |
| n-Butyl alcohol (1-butanol) | No | 5.75E-01 | 2.36E-03 | 10481 | 0 | No CPF | 1.48E-06 |
| Isobutanol | No | 7.55E-01 | 3.10E-03 | 10481 | 0 | No CPF | 6.46E-07 |
| 2-Ethoxyethanol | No | 3.08E-01 | 1.27E-03 | 10481 | 0 | No CPF | 1.98E-07 |
| Cyclohexanone | No | 9.30E-01 | 3.82E-03 | 10481 | 0 | No CPF | 4.77E-08 |
| 2-Chlorophenol | No | 1.37E-01 | <0.001[c] | 10481 | 0 | No CPF | Dropped[d] |
| Chloroethene(vinyl chloride) | No | 2.03E-06 | <0.001[c] | 10481 | 0 | Dropped[d] | Dropped[d] |
| Performance objective[e] | | | | | | 1.0E-06[f] | 1.0[g] |

Notes: See next page

## Table 8-3. Estimated Maximum Value for Incremental Lifetime Cancer Risk and Hazard Quotient for the Primary Hazardous Chemicals. (2 sheets)

[a] See PNNL-13895, *Hanford Contaminant Distribution Coefficient Database and Users Guide*, Rev. 1, for the basis for the $K_d$ values listed for chromium and nitrate. The $K_d$ values listed for the organic chemical compounds are determined from the chemicals' organic carbon/water partitioning coefficient and an estimate of 0.03% for the Hanford Site sediments fraction of organic content (PNNL-13895, Rev. 1, page 11, paragraph 3).
[b] All exposure scenarios are described in HNF-SD-WM-TI-707.
[c] Simulation predicted contaminant arrives at the fenceline, but at a concentration (0.001 µg/L) that is much below the minimum detection limit for standard analytical methods.
[d] Dropped from the analysis because the simulation predicted concentration (0.001 µg/L) is much below the minimum detection limit for standard analytical methods.
[e] Single Analyte Performance objectives apply to entire WMA, not just a single component of the WMA.
[f] *Washington Administrative Code* (WAC) 173-340-705 (2)(c)(ii), "Dangerous Waste Regulations."
[g] WAC 173-340-705 (2)(c)(i).

Notes:
No CPF = no cancer potency factor available.
No RfD = no reference dose available
DNA = did not arrive at fenceline within the modeling period
Gray shaded cells are nondetects and the inventory used in the risk assessment is calculated at one-half the minimum detection limit.

The impacts per performance metric associated with each inventory are given in Table 8-4. Two land use scenarios (industrial and residential) were evaluated for Hazard Index and ILCR. All impacts for both the nominal and 95% UCL inventories were 2 to 4 orders of magnitude below the performance objectives.

## 8.4 INADVERTENT INTRUDER

DOE recognizes that an inadvertent intruder may be onsite and not be discovered until after exposure has occurred. The radiological dose to an inadvertent intruder is therefore estimated as a part of this risk assessment.

The rural farmer with a dairy cow scenario was considered as the reference case in the SST PA, while the suburban garden and commercial farmer scenarios were sensitivity cases in the SST PA. The dose calculated for each of the intruder scenarios in Table 8-5 are for the nominal and bounding inventories at 100 years and 500 years after closure. For the average inventory at 100 years after closure, well driller, the rural pasture, and commercial farmer are approximately 35, 5, and 1,000 times below the performance objectives, respectively. However, the suburban garden scenario is approximately a factor of 3 over the performance objective. At 500 years after closure, all inadvertent intruder scenarios are below the performance objective for the average inventory. For the UCL 95% inventory at 100 years after closure, well driller, the rural pasture, and commercial farmer are approximately 20, 4, and 500 times below the performance objectives, respectively. However, the suburban garden scenario is approximately a factor of 4.5 over the performance objective. At 500 years after closure, all inadvertent intruder scenarios, except the suburban gardener, are below the performance objective for the UCL 95% inventory.

**Table 8-4. Cumulative Incremental Lifetime Cancer Risk, Hazard Index, and Radiological Drinking Water Dose from Peak Groundwater Concentration Related to Residual Waste Volume in Single-Shell Tank C-201.**

| Metric[a] | Industrial Receptor | | Residential Receptor | | Performance Objective[b] |
|---|---|---|---|---|---|
| | Nominal | Bounding | Nominal | Bounding | |
| Radioactive chemicals ILCR (unitless) | 1.55E-10[c] (1.55E-10)[c,d] | 2.79E-10[c] (2.79E-10)[c,d] | 3.63E-09[c] (3.63E-09)[c,d] | 6.53E-09[c] (6.53E-09)[c,d] | 1.0E-06 to 1.0E-4[e] |
| Nonradioactive chemicals ILCR (unitless) | | | Dropped[f] | Dropped[f] | 1.0E-5[g] |
| Hazard Index (unitless) | | | 1.32E-04[c] (1.32E-3)[c,d] | 2.70E-03[c] (2.96E-03)[c,d] | 1.0[g] |

| Dose | Nominal | Bounding | Dose |
|---|---|---|---|
| APF (mrem/yr) | 2.42E-5[c] (2.42E-5)[c,d] | 4.36E-05[c] (4.36E-05)[c,d] | 25 mrem/yr[h] |
| EPA maximum contaminant level (MCL) beta/photon emitters (mrem/yr target organ dose) | 4.95E-5[c] (4.95E-5)[c,d] | 8.91E-05[c] (8.91E-05)[c,d] | 4 mrem/yr[i] |
| **Groundwater Concentration** | **Nominal** | **Bounding** | **MCL** |
| $^{99}$Tc (pCi/L) | 1.06E-2 | 1.91E-02 | 900 pCi/L |
| $^{14}$C (pCi/L) | 1.20E-3 | 2.14E-03 | 2000 pCi/L |
| $^{129}$I (pCi/L) (not detected) | <0.001 | <0.001 | 1 pCi/L |
| Chromium (µg/L) | 5.05E-02 | 1.04E-01 | 100 µg/L |
| Fluoride (µg/L) | 1.12E-02 | 2.05E-02 | 4,000 µg/L |
| Nitrate (µg/L)[k] | 2.19E-03 | 8.61E-03 | 45,000 µg/L |
| Nitrite (µg/L)[k] | 5.62E-03 | 3.65E-03 | 3,000 µg/L |
| Uranium (µg/L) | 0.0 | 0.00E+00 | 30 µg/L |

[a] Metric ILCR-rad were evaluated using industrial and residential land use scenarios described in HNF-SD-WM-TI-707. ILCR-nonrad and Hazard Index were evaluated using WAC 173-340-705 (4) Method B (residential).
[b] Performance objectives apply to entire WMA, not just a single component of the WMA.
[c] Analytes with a fenceline concentration of less than either 0.001 pCi/L (radioactive) or 0.001 µg/L (nonradioactive), which is a value that is well below the minimum detection limit for standard analytical methods, are not included in the total.
[d] Total in parenthesis includes nondetects with inventory calculated at one-half the detection limit.
[e] EPA/540/R-99/006, *Radiation Risk Assessment at CERCLA Sites: Q & A, Directive 9200.4-31P.*
[f] Dropped from the analyses because no analyte with a cancer slope factor was predicted to have a concentration >0.001 µg/L, which is a value that is well below the minimum detection limit for standard analytical methods.
[g] WAC 173-340-705 (4).
[h] DOE O 435.1, *Radioactive Waste Management.*
[i] 66 FR 76708, "National Primary Drinking Water Regulations; Radionuclides; Final Rule."
[j] Model estimated concentration >0.001 pCi/L, which is a value that is well below the minimum detection limit for standard analytical methods.
[k] MCL is for nitrate and nitrite, not nitrogen in nitrate or nitrogen in nitrite which are 10,000 and 1,000, respectively.

**Table 8-5. Intruder Dose Summary for Single-Shell Tank C-201.**

| Years after Closure | Inventory | Inadvertent Intruder Scenario | | | |
|---|---|---|---|---|---|
| | | SST PA Reference Case | | SST PA Sensitivity Cases | |
| | | Well Driller (mrem) | Rural Pasture (mrem/yr) | Suburban Garden (mrem/yr) | Commercial Farm (mrem/yr) |
| 100 | Average | 14 | 19 | 300 | 0.11 |
| | 95% UCL | 25 | 28 | 450 | 0.2 |
| 500 | Average | 12 | 3.5 | 78 | 0.099 |
| | 95% UCL | 22 | 6.2 | 140 | 0.18 |

Notes:
Site closure is assumed to occur on January 1, 2032.
The performance objective for the well driller is 500 mrem. The performance objective for the other scenarios is 100 mrem/yr.
In the SST PA, the assumed depth of the waste material was 1-in. For the nominal case, the depth of the waste material was 0.73-in., while for the 95% UCL the depth of the waste material was 0.78-in.
Inventory remaining on the sidewall was not included in the intruder scenario because the amount of waste intersected by drilling down the sidewall would be less than 1 of the total inventory%.

## 8.5 SUMMARY

This risk assessment is summarized in the following:

a. The effects estimated for SST C-201, using the nominal inventory, are 3 to 4 orders of magnitude below the performance objectives for the groundwater pathway.

b. The following analytes had the most impact per performance metric (nominal inventory):

   1. **ILCR-Rad:** For the nominal inventory and industrial land use, $^{99}$Tc contributed 94% of the total, with $^{14}$C contributing 6% of the total. However, for the residential scenario, $^{99}$Tc contributed 92% of the total, with $^{14}$C contributing 2% of the total.

   2. **ILCR-Nonrad:** No analytes (either detected or nondetected) with a CPF had a fenceline concentration greater than 1.0E-03 µg/L, which is much lower than minimum detection limit for standard laboratory analytical methods.

   3. **Hazard Index:** $Cr^{+6}$ and fluoride contributed 99% and 1%, respectively, of the total for WAC-173-340 Method B.

   4. **APF:** $^{99}$Tc and $^{14}$C provided 77% and 23%, respectively, of the total for the APF.

   5. **Drinking Water Dose (Target Organ):** $^{99}$Tc and $^{14}$C provided 95.5% and 4.5%, respectively, for drinking water dose

   6. **Intruder Dose:** $^{137}$Cs, $^{90}$Sr, and plutonium isotopes contribute most of the dose in the first 300 years; after 200 years, plutonium isotopes are responsible for intruder dose.

c. Table 8-6 provides a comparison of the inventory used in DOE/ORP-2005-01 against the inventory for detected analytes calculated using the pre-retrieval samples for the nominal inventory and the bounding inventory. With the exception of water soluble components

such as $^{99}$Tc, nitrate, and nitrite, there is good agreement between the Hanford Tank Waste Operations Simulator (HTWOS) predicted inventory value and the inventory from the pre-retrieval samples and residual volume. The difference in the ratios between HTWOS predicted inventory assumed a dry retrieval method and that there would be no preferential removal of the contaminants.

**Table 8-6. Comparison of HTWOS Predicted Inventory Used in DOE/ORP-2005-01 and the Nominal Post-Retrieval Inventory.**

| | Analyte | DOE/ORP-2005-01[a] (HTWOS Predicted) | Nominal Post-Retrieval[a] Inventory | 95% UCL Inventory | Ratio Nominal/ HTWOS | Ratio 95% UCL / HTWOS |
|---|---|---|---|---|---|---|
| Groundwater | Carbon-14 | 1.01E-03 | 7.76E-04 | 1.39E-03 | 7.68E-01 | 1.38E+00 |
| | Technetium-99 | 1.21E-02 | 2.66E-03 | 4.79E-03 | 2.20E-01 | 3.96E-01 |
| | Chromium | 8.66E+00 | 1.23E+01 | 2.54E+01 | 1.42E+00 | 2.93E+00 |
| | Fluoride | 2.78E+00 | 2.73E+00 | 5.00E+00 | 9.82E-01 | 1.80E+00 |
| | Nitrate | 8.60E+01 | 1.37E+00 | 2.10E+00 | 1.59E-02 | 2.44E-02 |
| | Nitrite | 3.04E+01 | 5.34E-01 | 8.88E-01 | 1.76E-02 | 2.92E-02 |
| Inadvertent Intruder | Strontium-90 + D | 1.08E+02 | 2.44E+02 | 3.36E+02 | 2.26E+00 | 3.11E+00 |
| | Cesium-137 + D | 1.26E+01 | 9.84E+00 | 1.30E+01 | 7.81E-01 | 1.03E+00 |
| | Thorium-232 | 1.13E-14 | 4.09E-06 | 7.85E-06 | 3.62E+08 | 6.95E+08 |
| | Uranium-233 | 1.74E-05 | 1.41E-05 | 2.19E-05 | 8.10E-01 | 1.26E+00 |
| | Uranium-234 | 5.48E-02 | 4.54E-02 | 7.07E-02 | 8.28E-01 | 1.29E+00 |
| | Uranium-235 + D | 2.34E-03 | 1.92E-03 | 2.99E-03 | 8.21E-01 | 1.28E+00 |
| | Uranium-236 | 8.35E-04 | 1.09E-03 | 1.69E-03 | 1.31E+00 | 2.02E+00 |
| | Uranium-238 + D | 5.63E-02 | 4.55E-02 | 7.08E-02 | 8.08E-01 | 1.26E+00 |
| | Neptunium-237 + D | 1.40E-03 | 3.48E-03 | 5.15E-03 | 2.49E+00 | 3.68E+00 |
| | Plutonium-238 | 2.85E-01 | 6.97E-01 | 2.10E+00 | N/A | N/A |
| | Plutonium-239 | 8.95E+00 | 1.60E+01 | 2.77E+01 | 1.79E+00 | 3.09E+00 |
| | Plutonium-240 | 1.93E+00 | 3.45E+00 | 5.98E+00 | 1.79E+00 | 3.10E+00 |
| | Plutonium-241 + D | 1.02E+01 | 1.67E+01 | 2.89E+01 | 1.64E+00 | 2.83E+00 |
| | Americium-241 | 1.42E+00 | 2.50E+00 | 4.19E+00 | 1.76E+00 | 2.95E+00 |
| | Curium-242 | 5.54E-02 | 9.03E-02 | 1.51E-01 | 1.63E+00 | 2.73E+00 |
| | Curium-243 | 2.80E-03 | 4.41E-03 | 7.37E-03 | 1.58E+00 | 2.63E+00 |
| | Curium-244 | 6.32E-02 | 9.69E-02 | 1.62E-01 | 1.53E+00 | 2.56E+00 |

[a] Inventories for contaminants having the greatest impact for groundwater or inadvertent intruder pathway.

N/A: Not applicable because the inventory was calculated from the laboratory's minimum detection limit for that analyte.

# 9.0 ADDITIONAL RETRIEVAL TECHNOLOGIES

This section discusses the feasibility of available retrieval technologies, the feasibility of developing additional retrieval technologies, and the amount of additional waste that could be removed from SST C-201.

The SST C-201 waste retrieval campaign was the third time the VRS, described in Section 2.0, was used to retrieve waste from a Hanford SST. The VRS was first used in C-203 (RPP-RPT-26475, *Retrieval Data Report for Single-Shell Tank 241-C-203*) and C-202 (RPP-RPT-29095, *Retrieval Data Report for Single-Shell Tank 241-C-202*). The VRS retrieval satisfied M-45-00 retrieval criteria by retrieving waste from SST C-201 to the limit of the configuration of the VRS as deployed and leaving a residual volume of 19.2 $ft^3$.

## 9.1 FEASIBILITY AND VIABILITY OF OTHER AVAILABLE WASTE RETRIEVAL TECHNOLOGIES

Several variations of sluicing described in RPP-20577, *Stage II Retrieval Data Report for Single-Shell Tank 241-C-106*, and RPP-RPT-27406, *Demonstration Retrieval Data Report for Single-Shell Tank 241-S-112*, were evaluated. These include raw water modified sluicing, modified circulation system, remote water lancing, and ex-tank water heater on a recirculation line. However, RPP-16525 precludes the use of sluicing technologies for tanks designated 'assumed leakers' to minimize water additions and mitigate potential leaks during retrieval. As a result, sluicing technologies were not considered further.

The only other available technology reviewed was the mobile retrieval system (MRS). The MRS is currently the preferred technology for 100-series SSTs designated as assumed leakers. The MRS is similar to the VRS system in many respects but also deploys an in-tank vehicle (ITV). The ITV may have the capacity to move waste to the vacuum head, possibly retrieving more waste from the tank compared to using the VRS alone. However, the existing VRS with its AMS can reach all areas of the tank bottom, so any benefit from deploying the ITV would be negligible. Additionally, existing risers for the 200-series tanks are not large enough to accommodate the MRS system and would require some modification or construction of new risers to allow the use of the MRS. This is deemed impractical due to expected high worker exposure during construction of risers. As a result, MRS was also eliminated from consideration.

## 9.2 FEASIBILITY OF DEVELOPING NEW TECHNOLOGIES

New technologies are under development that could possibly enhance retrieval performance for future tanks, but these were not available for SST C-201. A brief description of these technologies follows in Sections 9.2.1 through 9.2.5. The technologies discussed are at varying stages of development. Some require substantial investment in research and development while others have already been used elsewhere but would need to be adapted for use at the Hanford Site. Activities needed to deploy these technologies could include engineering, procurement, testing, and construction. More detailed information regarding these technologies is included in RPP-20577.

### 9.2.1 AEA Technology Power Fluidics™[4]

The power fluidic process for sampling, mixing, and pumping tank waste at the Hanford Site has been evaluated for several years. This fluidic mixing and pumping system was tested by the Hanford Site SST retrieval program to demonstrate potential for dissolution of saltcake waste and mobilization and retrieval of insoluble solids (e.g., sludge waste). Testing results indicated that the fluidic mixing and pumping system did not fully meet objectives and that further development and demonstration would be required. Operation of this system appears to require use of high water volumes, which would preclude its use in an "assumed leaker" such as SST C-201.

### 9.2.2 Russian Pulsatile Mixer Pumps/Fluidic Retrieval Systems

The Russian Integrated Mining and Chemical Combine fluidic concept for mixing and pumping tank waste is similar to the power fluidics system but has design details different for the pump mechanism and nozzles. While the power fluidics system has no moving parts in the pump, the Russian unit uses a simple check valve mechanism. Both systems use two distinct cycles, fill and discharge, to perform a mixing action. Operation of this system, like the power fluidics system, appears to require use of high water volumes, which would preclude its use in an "assumed leaker" such as SST C-201.

### 9.2.3 Small Mobile Retrieval Vehicles

The following mobile retrieval systems were assessed:

a. Remotely Operated Vehicle Systems at Oak Ridge—In the 1996-1998 period, Oak Ridge National Laboratory deployed a series of hydraulically powered, remotely operated vehicles. The equipment was redesigned and improved. As redesigned, the equipment was a 4 ft x 5 ft parallelogram-style frame. Folding the frame enabled the device to deploy through a 24-in. tank riser (it is unclear whether this equipment could be deployed through the 24-in. SST C-201 hatchway, which is the largest opening in the tank roof). Many hardware failures occurred during deployment, requiring repair or replacement. The equipment was later used in other tanks in conjunction with a wall-washing tool (the linear scarifying end-effector), a confined sluicing end-effector, and a modified light duty utility arm[5] (MLDUA).

   The MLDUA was used at Oak Ridge to clean seven underground tanks, but shortcomings were observed in its operation. Although lessons learned were documented for both design and operations, the lessons have not been incorporated into any subsequent versions of the MLDUA.

b. Scarab III[6]—The Scarab III vehicles use four rubber-treaded wheels for traction on slick surfaces and four metal wheels for biting into thin layers of waste. The Scarab can climb over 8-in. obstacles and has a manipulator arm. The manipulator gripper end-effector has a payload limit of 5 lb and requires an 18-in.-diameter access. The unit has three

[4] AEA Technology Power Fluidics™ is a registered trademark of AEA Technology, Glengarnock, United Kingdom.
[5] Modified Light Duty Utility Arm is a trademark of SPAR Aerospace, Ltd., Edmonton, Alberta, Canada.
[6] Scarab III is a trademark of R.O.V. Technologies, Inc., Vernon, Vermont.

on-board cameras for viewing deployment, retrieval, and driving operations. This system has been used primarily for sampling at Hanford but has not been demonstrated for retrieval and requires additional development and testing.

c. TMR Associates VAC TRAX[7]—The VAC TRAX is a remote-operated rotating high-pressure water jetting tool that directs ultra-high-pressure water to remove material coverings from a variety of surfaces, e.g., contaminated paint from concrete walls and floors. At higher pressures, the equipment can perform light scabbling or deep scarification of concrete surfaces. The equipment is fully encapsulated with water and debris vacuumed from a manifold through a flexible vacuum hose. The system supplies water up to 36,000 psi through a rotating manifold containing orifices to produce a concentrated stream. However, this system operates in a submerged environment and would be precluded in an "assumed leaker" such as SST C-201.

### 9.2.4 Tank Wall Washing at West Valley Demonstration Project

The retrieval process was very efficient during early stages of waste removal at the West Valley Demonstration Project. As the process moved from bulk removal to heel and residue retrieval, the number of transfers and associated time per transfer climbed steadily (Hamel and Damerow, *Completing HLW Vitrification at the WVDP; The Approach to Final Retrieval, Flushing, and Characterization*). Riser-mounted arms and positioning systems were developed to provide capability to wash residues from internal tank surfaces. Oxalic acid and mixed organic acids were not used because of concerns for tank integrity. This system may remove additional waste from tank walls, but because only a minimal amount of waste is left on the SST C-201 walls, there is little benefit in removing additional waste compared to the time and cost to test and deploy this system.

### 9.2.5 Dry Ice Blasting

Decontaminating surfaces using dry ice blasting is a relatively new cleaning process using solid $CO_2$ pellets. The pellets sublimate (convert directly from a solid blast pellet to a vapor) leaving no residue. This is envisioned as a sandless sandblasting approach to dislodge hard-to-remove residue from the tank surfaces. The dry ice is accelerated by compressed air and requires between 80 psi to 100 psi and 120 $ft^3$/min to 150 $ft^3$/min (Lapointe, *Sand-less Sandblasting*). On a fact sheet for alternatives to trichloroethane, EPA identified dry ice blasting with solid pellets as a desirable alternative for cleaning metal surfaces [EPA-905-F-00-026, *Technical Fact Sheet for 1,1,1-Trichloroethane (TCA) Hazards and Alternatives*]. Like tank wall washing, this system may remove additional waste from tank walls, but because only a minimal amount of waste is left on the SST C-201 walls, there is little benefit in removing additional waste compared to the time and cost to test and deploy this system.

## 9.3 ADDITIONAL WASTE REMOVAL

The SST C-201 VRS satisfied the requirements set out in HFFACO Milestone M-45-00. Therefore, no additional waste removal is needed.

[7] VAC TRAX is a registered trademark of TMR Associates, Rutherford, New Jersey.

# 10.0 RECOMMENDATIONS FOR FURTHER ACTIONS

This section provides recommendations for further actions, identifies lessons learned from the retrieval of SST C-202 which were implemented for SST C-201 retrieval, and discusses opportunities to refine waste retrieval technologies based on lessons learned from the SST C-201 retrieval.

## 10.1 RECOMMENDATIONS FOR SINGLE-SHELL TANK C-201

As demonstrated by information presented in this RDR, retrieval of SST C-201 is complete. DOE has no recommendation for additional retrieval actions at SST C-201 because M-45-00 retrieval criteria for this tank are satisfied as shown in Sections 5.0 and 6.0 of this RDR.

## 10.2 IMPROVEMENTS IMPLEMENTED FOR SINGLE-SHELL TANK C-201 RETRIEVAL BASED ON LESSONS LEARNED FROM SINGLE-SHELL TANK C-202 RETRIEVAL

Following retrieval of waste from SST C-202, opportunities to improve future retrieval operations were identified and summarized in RPP-RPT-26475. Based on lessons learned from the SST C-202 retrieval, the following modifications were implemented for SST C-201 retrieval:

a. The vacuum line from the AMS head to the vessel/pump was straightened.
b. Hard pipe was used for drain lines to enhance drainage.
c. Line flushes were reduced, based on the specific gravity of the waste, to limit the amount of water used.
d. A dedicated exhauster was used during retrieval to increase ventilation.

System improvements incorporated into the SST C-202 waste retrieval system as a result of lessons learned from the tank SST C-203 retrieval included the removal of sharp bends in the vacuum line between the top of the AMS and the slurry tank and a modification of the transfer line flushing frequency.

The shorter hose and modification to the vacuum line between the top of the AMS and the slurry tank resulted in better vacuum and higher airflow rates through the AMS. The exhauster was switched to exhausting SST C-201 only. This increased the SST C-201 ventilation rate from 225 scfm to 300 scfm, increasing the vacuum in the tank and eliminating the low vacuum problems; it also reduced fogging in the tank headspace, which provided better visual observation. The transfer line flush frequencies had been changed to allow for less frequent flushing, depending on the SpG of the waste slurries transferred. Because SpGs for SST C-201 retrieval were low, transfer line flushes only occurred at the end of each operating day.

During tank 241-C-201 retrieval, the ability to hydraulically rotate the AMS was lost when the rotation "locked-up" during operation. A manual rotation technique was developed to partially overcome this problem. The AMS was unbolted from its position and manually rotated. Flange

clamps replaced the hold-down bolts so that the AMS could be rotated to any desired position. For each rotational position, the AMS could retrieve in a line across the tank bottom. Using the scarifier to mobilize waste adjacent to the path of the AMS suction head allowed a path two to three times the width of the AMS head to be influenced.

The inability to use lube water and air injection in the AMS required that air and water be provided to the AMS by other means. Water additions to the tank via mast flushes and scarifier were used to substitute for the lube water. Air from the tank headspace substituted for the air injection. The AMS head was positioned so that it was only partially submerged in the waste or it was alternately lowered into the waste and lifted above it so that air could be provided to the AMS. Prolonged submersion of the AMS head in the waste was not possible.

## 10.3 OPPORTUNITIES FOR IMPROVEMENT OF WASTE RETRIEVAL OPERATIONS AT OTHER SINGLE-SHELL TANKS BASED ON LESSONS LEARNED FROM SINGLE-SHELL TANK C-201

Lessons learned from the retrieval of C-201 were captured in RPP-29413, Rev.1, *Tank 241-C-202 and 241-C-201 Vacuum Retrieval Lessons Learned: Opportunities for Refinement of Future Retrieval Operations at Other Single-Shell Tanks*. RPP-29413 identifies a summary of opportunities to improve future retrieval operations, as well as specific lessons proposed for implementation as budget and time allows.

Opportunities for improvement for future retrieval operations include physical modifications to equipment (e.g., using hard pipes for drain lines), operational changes (e.g., "sipping" the waste surface rather than submerging the mast head), and work planning (e.g., cautions about extrapolation of Cold Test Facility performance data to planned field activities).

Lessons learned from C-201 retrieval that are proposed for implementation in future retrievals, as budget and time allow, are the following:

a. Replace vacuum-skid-seal-water-separator-water radiator with a higher capacity unit. The current unit is undersized and results in poor vacuum pump performance, frequent delays to dump hot water from separator, and fogging in the tank.

b. Replace AMS mast with modified 241-U-200 mast. The 241-U-200 mast has additional venturi to enhance vertical lift for SpGs in the 2.0 to 4.0 range.

c. Add Loctite®[8] to vacuum pump motor couplers or provide a more positive mechanical connection. This will minimize the chance of decoupling as a result of the force created by the cycling of the pumps, most of which is due to breaking vacuum to clear a clogged screen. Also consider a software modification that will allow the mast to be vented to atmosphere without turning off the vacuum pumps.

d. Test the C-204 line length with simulant that contains large granular particles to mimic waste encountered in SST C-203, SST C-202, and SST C-201 to determine its effect on retrieval performance.

[8] Loctite® is a registered trademark of Henkel Corporation, Gulph Mills, Pennsylvania.

e. Develop a more robust supplemental light for the video camera. Consider the multi-lamp unit deployed in tank 241-S-112. The constant illumination of a supplemental light provides better quality images. The on-board light creates too much contrast difference from the middle of the frame to the sides.

f. Establish an operating method to clear a trough in the middle, work in a disciplined matter outward to the wall (each side of the trough), and then work from the wall back to the center (each side). Any similar approach that restricts the AMS operation within a boundary to complete retrieval to the limit of technology prior to repositioning should be considered.

The application of lessons learned to future retrievals will be at the discretion of the retrieval project manager.

## 11.0 REFERENCES

66 FR 76708, 2000, "National Primary Drinking Water Regulations; Radionuclides; Final Rule," *Federal Register*, Vol. 65, pp. 76707-76753 (December 7).

AIR 03-704, NOC ID 579, 2003, *Approval of Notice of Construction for 241-C-200 Series Tanks Retrieval*, Washington State Department of Health, Olympia, Washington.

CVI-73550, 1943, Drawing D-20, *Typical Sections for 20 ft Tanks*, and Drawing D-23, *Structural Steel Lining for 20 ft Tanks*, Richland, Washington.

DOE O 435.1, *Radioactive Waste Management*, U.S. Department of Energy, Washington, D.C.

DOE/ORP-2005-01, 2005, *Single-Shell Tank Performance Assessment*, partial predecisional draft, U.S. Department of Energy, Office of River Protection, Richland, Washington.

Ecology, EPA, and DOE, 1989, *Hanford Federal Facility Agreement and Consent Order*, as amended, State of Washington Department of Ecology, U.S. Environmental Protection Agency, and U.S. Department of Energy, Olympia, Washington.

EPA/540/1-89/002, 1989, *Risk Assessment Guidance for Superfund Volume I Human Health Evaluation Manual (Part A) Interim Final*, U.S. Environmental Protection Agency, Washington D.C.

EPA/540/R-99/006, 1999, *Radiation Risk Assessment at CERCLA Sites: Q & A*, Directive 9200.4-31P, Office of Radiation and Indoor Air, U.S. Environmental Protection Agency, Washington D.C.

EPA-905-F-00-026, 2000, *Technical Fact Sheet for 1,1,1-Trichloroethane (TCA) Hazards and Alternatives*, U.S. Environmental Protection Agency, Region 5, Chicago, Illinois.

H-2-73354, 1986, *Piping Waste Tank Isolation 241-C-203*, Rev. 2, U.S. Department of Energy, Richland Operations Office, Richland, Washington.

H-14-106126-3, 2004, *C-201 Tank/Riser P & I D*, Drawing H-14-106126, Sheet 3, Rev. 7, U.S. Department of Energy, Office of River Protection, Richland, Washington.

H-14-106126-4, 2004, *C-202 Tank/Riser P & I D*, Drawing H-14-106126, Sheet 4, Rev. 7, U.S. Department of Energy, Office of River Protection, Richland, Washington.

H-14-106126-5, 2004, *C-203 Tank/Riser P & I D*, Drawing H-14-106126, Sheet 5, Rev. 9, U.S. Department of Energy, Office of River Protection, Richland, Washington.

H-14-106126-6, 2004, *C-204 Tank/Riser P & I D*, Drawing H-14-106126, Sheet 6, Rev. 7, U.S. Department of Energy, Office of River Protection, Richland, Washington.

Hamel, W. F., Jr., and F. W. Damerow, 2001, "Completing HLW Vitrification at the WVDP; The Approach to Final Retrieval, Flushing, and Characterization," in *Proc. Int. Conf. WM'01*, Tucson, Arizona.

HNF-13832, 2002, *Tank 241-C-201 Archive Samples in Support of Retrieval Performance Evaluation Analytical Results for the Final Report*, Rev. 0, CH2M HILL Hanford Group, Inc., Richland, Washington.

HNF-EP-0182, 2005, *Waste Tank Summary Report for Month Ending September 30, 2005*, Rev. 210, CH2M HILL Hanford Company, Inc., Richland, Washington.

HNF-SD-WM-TI-707, 2004, *Exposure Scenarios and Unit Dose Factors for Hanford Tank Waste Performance Assessments*, Rev. 4, CH2M HILL Hanford Group, Inc., Richland, Washington.

HNF-SD-WM-TSR-006, 2003, *Tank Farms Technical Safety Requirements*, Rev. 4-F, CH2M HILL Hanford Group, Inc., Richland, Washington.

Lapointe, J., 2004, "Sand-less Sandblasting," *Pollution Engineering Magazine*, February.

PNNL-13895, 2003, *Hanford Contaminant Distribution Database and User's Guide*, Rev. 1, Pacific Northwest National Laboratory, Richland, Washington.

RPP-6924, 2000, *Statistical Methods for Estimating the Uncertainty in the Best-Basis Inventories*, Rev. 0, CH2M HILL Hanford Group, Inc., Richland, Washington.

RPP-7625, 2004, *Best Basis Inventory Process Requirements*, Rev. 5, CH2M HILL Hanford Group, Inc., Richland, Washington.

RPP-12711, 2004, *Temporary Waste Transfer Line Management Program Plan*, Rev. 3A, Cogema Engineering, Richland, Washington.

RPP-13774, 2004, *Single-Shell Tank System Closure Plan*, Rev. 2, CH2M HILL Hanford Group, Inc., Richland, Washington.

RPP-15408, 2003, *Origin of Wastes in C-200-Series Single-Shell Tanks*, Rev. 0, CH2M HILL Hanford Group, Inc., Richland, Washington.

RPP-16525, 2005, *C-200-Series Tanks Retrieval Functions and Requirements*, Rev. 6A, CH2M HILL Hanford Group, Inc., Richland, Washington.

RPP-16616, 2003, *Component Closure Action Data Quality Objectives for the C-200 Series Tanks*, Rev. 0, CH2M HILL Hanford Group, Inc., Richland, Washington.

RPP-16945, 2005, *Process Control Plan for the 241-C-200 Series Waste Retrieval System*, Rev. 7, CH2M HILL Hanford Group, Inc., Richland, Washington.

RPP-17137, 2004, *Sampling and Analysis Plan for the C-200 Series Tanks Component Closure Action*, Rev. 1, CH2M HILL Hanford Group, Inc., Richland, Washington.

RPP-17190, 2004, *Safety Evaluation of the Waste Retrieval System Vacuum System for 241-C Tank Farms 200-Series Tanks*, Rev. 4, CH2M HILL Hanford Group, Inc., Richland, Washington.

RPP-17507, 2003, *Waiver of Temperature Requirements During Retrieval of 241-C-200 Series Tanks*, Rev. 0, CH2M HILL Hanford Group, Inc., Richland, Washington.

RPP-20577, 2004, *Stage II Retrieval Data Report for Single-Shell Tank 241-C-106*, Rev. 0, CH2M HILL Hanford Group, Inc., Richland, Washington.

RPP-21084, 2006, *Final Report for Tanks 241-C-201, 241-C-202, 241-C-203, and 241-C-204 Solid Grab Samples*, Rev. 0, CH2M HILL Hanford Group, Inc., Richland, Washington.

RPP-23403, 2005, *Single-Shell Tank Component Closure Data Quality Objectives*, Rev. 0, CH2M HILL Hanford Group, Inc., Richland, Washington.

RPP-29413, 2006, *Tank 241-C-202 and 241-C-201 Vacuum Retrieval Lessons Learned: Opportunities for Refinement of Future Retrieval Operations at Other Single-Shell Tanks*, Rev. 1, CH2M HILL Hanford Group, Inc., Richland, Washington.

RPP-29441, 2006, *Post-Retrieval Waste Volume Determination for Single-Shell Tank 241-C-201*, Rev. 0, CH2M HILL Hanford Group, Inc., Richland, Washington.

RPP-CALC-29809, 2006, *Leak Detection Monitoring Calculation for Single-Shell Tank 241-C-201*, Rev. 0, CH2M HILL Hanford Group, Inc., Richland, Washington.

RPP-RPT-22891, 2004, *Revised Methodology to Calculating Residual Waste Volume at 95% Confidence Interval*, Rev. 0, CH2M HILL Hanford Group, Inc., Richland, Washington.

RPP-RPT-25160, 2005, *Waste Compatibility Assessment of Tank 241-C-103 Waste with Tank 241-AN-106 Waste and Tank 241-AN-106 Waste with Tank 241-C-103 Waste*, Rev. 1, CH2M HILL Hanford Group, Inc., Richland, Washington.

RPP-RPT-26475, 2006, *Retrieval Data Report for Single-Shell Tank 241-C-203*, Rev. 1, CH2M HILL Hanford Group, Inc., Richland, Washington.

RPP-RPT-29095, 2006, *Retrieval Data Report for Single-Shell Tank 241-C-202*, Rev. 0, CH2M HILL Hanford Group, Inc., Richland, Washington.

RPP-RPT-27406, 2005, *Demonstration Retrieval Data Report for Single-Shell Tank 241-S-112*, Rev. 1, CH2M HILL Hanford Group, Inc., Richland, Washington.

RPP-RPT-29889, 2006, *Tank 241-C-201 Residual Waste Inventory Estimates for Component Closure Risk Assessment*, Rev. 0, CH2M HILL Hanford Group, Inc., Richland, Washington.

SW-846, *Test Methods for Evaluating Solid Waste, Physical/Chemical Methods*, Third Edition, as amended, U.S. Environmental Protection Agency, Washington, D.C.

SW-846, 1986, *Test Methods for Evaluating Solid Wastes, Physical/Chemical Methods*, Third Edition, as amended, *http://www.epa.gov/epaoswer/hazwaste/test/main.htm*, U.S. Environmental Protection Agency, Washington, D.C.

Tank Waste Information Network System (TWINS), [Best-Basis Calculation Detail Report], available at http://twins.pnl.gov/data/datamenu.htm .

TFC-ENG-CHEM-P-47, 2005, *Single-Shell Tank Retrieval Completion Evaluation*, Rev. A-1, CH2M HILL Hanford Group, Inc., Richland, Washington.

TFC-ESHQ-ENV_FS-C-01, 2005, *Environmental Notification*, Rev. B-3, CH2M HILL Hanford Group, Inc., Richland, Washington.

TFC-OPS-OPER-C-24, 2005, *Occurrence Reporting and Processing of Operations Information*, Rev. B-3, CH2M HILL Hanford Group, Inc., Richland, Washington.

TO-220-106, 2005, *Transfer From 241-C-200 Series Tanks to 241-AN-106*, Rev. A-14, CH2M HILL Hanford Group, Inc., Richland, Washington.

WAC 173-340, "Model Toxics Control Act – Cleanup," *Washington Administrative Code*, as amended.

WHC-SD-WM-ER-349, 1994, *Historical Tank Content Estimate for the Northeast Quadrant of the Hanford 200 East Area*, Rev. 0, Westinghouse Hanford Company, Richland, Washington.

# APPENDIX A

## SINGLE-SHELL TANK 241-C-201 WASTE CONCENTRATIONS AND INVENTORIES

**Table A-1. Average Concentrations and Relative Standard Deviations for C-201 Post-Retrieval Waste Constituents. (4 sheets)**

| Constituent Name | CAS Number | Detection Limit | Average | Units | RSD (%) |
|---|---|---|---|---|---|
| 1,1,1-Trichloroethane | 71-55-6 | < | 8.60E-03 | µg/g | 100% |
| 1,1,2,2-Tetrachloroethane | 79-34-5 | < | 6.25E-03 | µg/g | 100% |
| 1,1,2-Trichloro-1,2,2-trifluoroethane | 76-13-1 | < | 9.72E-03 | µg/g | 100% |
| 1,1,2-Trichloroethane | 79-00-5 | < | 6.25E-03 | µg/g | 100% |
| 1,1-Dichloroethene | 75-35-4 | < | 9.90E-03 | µg/g | 100% |
| 1,2,4-Trichlorobenzene | 120-82-1 | < | 9.82E-03 | µg/g | 100% |
| 1,2-Dichlorobenzene | 95-50-1 | < | 4.67E+02 | µg/g | 100% |
| 1,2-Dichloroethane | 107-06-2 | < | 6.15E-03 | µg/g | 100% |
| 1,4-Dichlorobenzene | 106-46-7 | < | 2.90E+02 | µg/g | 100% |
| 1-Butanol | 71-36-3 | < | 1.21E+03 | µg/g | 100% |
| 2,4,5-Trichlorophenol | 95-95-4 | < | 2.70E+02 | µg/g | 100% |
| 2,4,6-Trichlorophenol | 88-06-2 | < | 2.77E+02 | µg/g | 100% |
| 2,4-Dinitrotoluene | 121-14-2 | < | 3.13E+02 | µg/g | 100% |
| 2,6-Bis(1,1-dimethylethyl)-4-methylphenol | 128-37-0 | < | 8.30E+02 | µg/g | 100% |
| 2-Butanone | 78-93-3 | | 4.18E-03 | µg/g | 76% |
| 2-Chlorophenol | 95-57-8 | < | 2.87E+02 | µg/g | 100% |
| 2-Ethoxyethanol | 110-80-5 | < | 6.47E+02 | µg/g | 100% |
| 2-Methylphenol | 95-48-7 | < | 2.97E+02 | µg/g | 100% |
| 2-Nitrophenol | 88-75-5 | < | 2.63E+02 | µg/g | 100% |
| 2-Nitropropane | 79-46-9 | < | 1.50E-02 | µg/g | 100% |
| 4-Chloro-3-methylphenol | 59-50-7 | < | 2.93E+02 | µg/g | 100% |
| 4-Nitrophenol | 100-02-7 | < | 2.73E+02 | µg/g | 100% |
| Acenaphthene | 83-32-9 | < | 3.00E+02 | µg/g | 100% |
| Acetate | 71-50-1 | < | 2.24E+03 | µg/g | 100% |
| Acetone | 67-64-1 | | 1.51E-02 | µg/g | 75% |
| Aluminum | 7429-90-5 | | 4.37E+03 | µg/g | 9% |
| Americium-241 | 14596-10-2 | | 2.63E+00 | µCi/g | 31% |
| Ammonium Ion by IC | 14798-03-9 | | 3.69E+01 | µg/g | 54% |
| Antimony | 7440-36-0 | < | 9.48E+01 | µg/g | 100% |
| Antimony-125 | 14234-35-6 | < | 7.15E-01 | µCi/g | 100% |
| Aroclor 1016 (dry weight) | 12674-11-2 | < | 2.07E-01 | µg/g | 100% |
| Aroclor 1221 (dry weight) | 11104-28-2 | < | 6.48E-02 | µg/g | 100% |
| Aroclor 1232 (dry weight) | 11141-16-5 | < | 1.17E+00 | µg/g | 100% |
| Aroclor 1242 (dry weight) | 53469-21-9 | < | 2.07E-01 | µg/g | 100% |
| Aroclor 1248 (dry weight) | 12672-29-6 | < | 6.68E-02 | µg/g | 100% |
| Aroclor 1254 (dry weight) | 11097-69-1 | | 9.60E-02 | µg/g | 25% |
| Aroclor 1260 (dry weight) | 11096-82-5 | < | 2.85E-01 | µg/g | 100% |
| Arsenic | 7440-38-2 | < | 1.19E+02 | µg/g | 100% |
| Barium | 7440-39-3 | | 1.68E+02 | µg/g | 27% |
| Benzene | 71-43-2 | < | 6.02E-03 | µg/g | 100% |
| Beryllium | 7440-41-7 | < | 1.52E+01 | µg/g | 100% |
| Bismuth | 7440-69-9 | | 6.49E+02 | µg/g | 36% |

**Table A-1. Average Concentrations and Relative Standard Deviations for C-201 Post-Retrieval Waste Constituents. (4 sheets)**

| Constituent Name | CAS Number | Detection Limit | Average | Units | RSD (%) |
|---|---|---|---|---|---|
| Boron | 7440-42-8 | < | 4.91E+01 | µg/g | 100% |
| Bromide | 24959-67-9 | < | 2.82E+03 | µg/g | 100% |
| Butylbenzylphthalate | 85-68-7 | < | 6.00E+02 | µg/g | 100% |
| Cadmium | 7440-43-9 | | 9.74E+00 | µg/g | 71% |
| Calcium | 7440-70-2 | | 7.20E+03 | µg/g | 21% |
| Carbon disulfide | 75-15-0 | < | 8.90E-03 | µg/g | 100% |
| Carbon tetrachloride | 56-23-5 | < | 1.10E-02 | µg/g | 100% |
| Carbon-14 | 14762-75-5 | | 8.14E-04 | µCi/g | 38% |
| Cerium | 7440-45-1 | < | 1.33E+02 | µg/g | 100% |
| Cesium-137 | 10045-97-3 | | 1.03E+01 | µCi/g | 11% |
| Chloride | 16887-00-6 | | 3.12E+02 | µg/g | 53% |
| Chlorobenzene | 108-90-7 | < | 7.42E-03 | µg/g | 100% |
| Chloroform | 67-66-3 | < | 9.10E-03 | µg/g | 100% |
| Chromium | 7440-47-3 | | 1.29E+04 | µg/g | 52% |
| Cobalt | 7440-48-4 | | 8.97E+01 | µg/g | 20% |
| Cobalt-60 | 10198-40-0 | < | 2.68E-01 | µCi/g | 100% |
| Copper | 7440-50-8 | | 6.43E+02 | µg/g | 17% |
| Cresol | 1319-77-3 | < | 5.67E+02 | µg/g | 100% |
| Cresol (m) | 108-39-4 | < | 2.87E+02 | µg/g | 100% |
| Cresol (p) | 106-44-5 | < | 2.87E+02 | µg/g | 100% |
| Curium-243/244 | NA | < | 3.76E-01 | µCi/g | 100% |
| Cyanide | 57-12-5 | | 2.18E+00 | µg/g | 27% |
| Cyclohexanone | 108-94-1 | < | 1.95E+03 | µg/g | 100% |
| Di-n-butylphthalate | 84-74-2 | < | 1.95E+03 | µg/g | 100% |
| Di-n-octylphthalate | 117-84-0 | < | 3.47E+02 | µg/g | 100% |
| Ethyl acetate | 141-78-6 | < | 9.32E-03 | µg/g | 100% |
| Ethyl ether | 60-29-7 | < | 8.50E-03 | µg/g | 100% |
| Ethylbenzene | 100-41-4 | < | 1.50E-02 | µg/g | 100% |
| Europium | 7440-53-1 | | 6.53E+01 | µg/g | 9% |
| Europium-152 | 14683-23-9 | < | 1.17E+00 | µCi/g | 100% |
| Europium-154 | 15585-10-1 | < | 8.18E-01 | µCi/g | 100% |
| Europium-155 | 14391-16-3 | < | 4.49E-01 | µCi/g | 100% |
| Fluoranthene | 206-44-0 | < | 3.10E+02 | µg/g | 100% |
| Fluoride | 16984-48-8 | | 2.86E+03 | µg/g | 40% |
| Formate | 12311-97-6 | < | 2.24E+03 | µg/g | 100% |
| Glycolate | 666-14-8 | < | 1.85E+03 | µg/g | 100% |
| Hexachlorobutadiene | 87-68-3 | < | 3.13E+02 | µg/g | 100% |
| Hexachloroethane | 67-72-1 | < | 1.58E+01 | µg/g | 100% |
| Hexone | 108-10-1 | | 2.41E-03 | µg/g | 69% |
| Iodine-129 | 15046-84-1 | < | 3.04E-04 | µCi/g | 100% |
| Iron | 7439-89-6 | | 1.17E+05 | µg/g | 39% |
| Isobutanol | 78-83-1 | < | 1.59E+03 | µg/g | 100% |
| Lanthanum | 7439-91-0 | < | 1.29E+01 | µg/g | 100% |

**Table A-1. Average Concentrations and Relative Standard Deviations for C-201 Post-Retrieval Waste Constituents. (4 sheets)**

| Constituent Name | CAS Number | < Detection Limit | Average | Units | RSD* (%) |
|---|---|---|---|---|---|
| Lead | 7439-92-1 | | 6.65E+03 | µg/g | 16% |
| Lithium | 7439-93-2 | < | 1.52E+01 | µg/g | 100% |
| Magnesium | 7439-95-4 | | 8.86E+02 | µg/g | 43% |
| Manganese | 7439-96-5 | | 2.02E+04 | µg/g | 51% |
| Mercury | 7439-97-6 | | 1.14E+02 | µg/g | 16% |
| Methylenechloride | 75-09-2 | < | 7.35E-03 | µg/g | 100% |
| Molybdenum | 7439-98-7 | < | 1.90E+01 | µg/g | 100% |
| Morpholine, 4-nitroso- | 59-89-2 | < | 6.53E+02 | µg/g | 100% |
| Naphthalene | 91-20-3 | < | 2.97E+02 | µg/g | 100% |
| Neodymium | 7440-00-8 | < | 7.58E+01 | µg/g | 100% |
| Neptunium-237 | 13994-20-2 | | 5.17E+00 | µg/g | 21% |
| Nickel | 7440-02-0 | | 6.54E+03 | µg/g | 52% |
| Nickel-63 | 13981-37-8 | | 9.76E-01 | µCi/g | 23% |
| Niobium | 7440-03-1 | < | 1.17E+02 | µg/g | 100% |
| Nitrate | 14797-55-8 | | 1.44E+03 | µg/g | 24% |
| Nitrite | 14797-65-0 | | 5.60E+02 | µg/g | 31% |
| Nitrobenzene | 98-95-3 | < | 3.13E+02 | µg/g | 100% |
| N-Nitroso-di-n-propylamine | 621-64-7 | < | 2.77E+02 | µg/g | 100% |
| Oxalate | 338-70-5 | | 5.42E+04 | µg/g | 59% |
| Palladium | 7440-05-3 | | 1.55E+03 | µg/g | 3% |
| Cresol (m) | 108-39-4 | < | 2.87E+02 | µg/g | 100% |
| Cresol (p) | 106-44-5 | < | 2.87E+02 | µg/g | 100% |
| Pentachlorophenol | 87-86-5 | < | 2.32E+02 | µg/g | 100% |
| Percent Water | NA | | 2.44E+01 | % | 10% |
| Phenol | 108-95-2 | < | 2.87E+02 | µg/g | 100% |
| Phosphorus | 7723-14-0 | | 1.90E+04 | µg/g | 21% |
| Plutonium-238 | 13981-16-3 | < | 7.31E-01 | µCi/g | 100% |
| Plutonium-239/240 | NA | | 2.04E+01 | µCi/g | 35% |
| Potassium | 7440-09-7 | < | 9.48E+02 | µg/g | 100% |
| Praseodymium | 7440-10-0 | | 3.11E+02 | µg/g | 75% |
| Pyrene | 129-00-0 | < | 2.97E+02 | µg/g | 100% |
| Pyridine | 110-86-1 | < | 2.73E+02 | µg/g | 100% |
| Rhodium | 7440-16-6 | < | 4.35E+02 | µg/g | 100% |
| Rubidium | 7440-17-7 | < | 6.52E+03 | µg/g | 100% |
| Ruthenium | 7440-18-8 | | 1.35E+02 | µg/g | 11% |
| Samarium | 7440-19-9 | < | 3.79E+01 | µg/g | 100% |
| Selenium | 7782-49-2 | < | 1.22E+02 | µg/g | 100% |
| Selenium-79 | 15758-45-9 | < | 9.75E-04 | uCi/g | 100% |
| Silicon | 7440-21-3 | | 7.43E+03 | µg/g | 28% |
| Silver | 7440-22-4 | < | 1.30E+01 | µg/g | 100% |
| Sodium | 7440-23-5 | | 5.23E+04 | µg/g | 16% |
| Strontium | 7440-24-6 | | 9.68E+02 | µg/g | 40% |
| Strontium-89/90 | 10098-97-2 | | 2.56E+02 | µCi/g | 14% |

**Table A-1. Average Concentrations and Relative Standard Deviations for C-201 Post-Retrieval Waste Constituents. (4 sheets)**

| Constituent Name | CAS Number | Detection Limit | Average | Units | RSD (%) |
|---|---|---|---|---|---|
| Sulfide | 18496-25-8 | < | 1.08E+01 | µg/g | 100% |
| Sulfur | 7704-34-9 | | 1.30E+03 | µg/g | 19% |
| Tantalum | 7440-25-7 | < | 1.19E+02 | µg/g | 100% |
| Technetium-99 | 14133-76-7 | | 1.65E-01 | µg/g | 38% |
| Tellurium | 13494-80-9 | < | 1.52E+02 | µg/g | 100% |
| Tetrachloroethene | 127-18-4 | < | 7.85E-03 | µg/g | 100% |
| Thallium | 7440-28-0 | < | 3.51E+02 | µg/g | 100% |
| Thorium | 7440-29-1 | | 6.62E+02 | µg/g | 16% |
| Thorium-230 | 14269-63-7 | < | 3.79E+00 | µg/g | 100% |
| Thorium-232 | NA | | 3.90E+01 | µg/g | 44% |
| Tin | 7440-31-5 | | 1.38E+02 | µg/g | 3% |
| Titanium | 7440-32-6 | | 1.52E+01 | µg/g | 129% |
| Toluene | 108-88-3 | < | 7.02E-03 | µg/g | 100% |
| Trans-1,3-Dichloropropene | 10061-02-6 | < | 6.12E-03 | µg/g | 100% |
| Tributyl phosphate | 126-73-8 | | 2.12E+04 | µg/g | 61% |
| Trichloroethene | 79-01-6 | < | 1.20E-02 | µg/g | 100% |
| Trichlorofluoromethane | 75-69-4 | < | 8.97E-03 | µg/g | 100% |
| Tritium | 15086-10-9 | < | 7.21E-03 | µg/g | 100% |
| Tungsten | 7440-33-7 | | 1.05E+03 | µg/g | 3% |
| Uranium | 7440-61-1 | | 1.43E+05 | µg/g | 25% |
| Uranium-233 | 13968-55-3 | < | 3.79E+00 | µg/g | 100% |
| Uranium-234 | 13966-29-5 | | 6.25E+00 | µg/g | 22% |
| Uranium-235 | 15117-96-1 | | 7.33E+02 | µg/g | 22% |
| Uranium-236 | 13982-70-2 | | 8.60E+00 | µg/g | 27% |
| Uranium-238 | NA | | 1.17E+05 | µg/g | 22% |
| Vanadium | 7440-62-2 | < | 1.22E+01 | µg/g | 100% |
| Vinyl chloride | 75-01-4 | < | 4.25E-03 | µg/g | 100% |
| Xylene (m) | 108-38-3 | < | 1.70E-02 | µg/g | 100% |
| Xylene (o) | 95-47-6 | < | 5.32E-03 | µg/g | 100% |
| Xylene (p) | 106-42-3 | < | 1.70E-02 | µg/g | 100% |
| Xylenes (total) | 1330-20-7 | < | 2.20E-02 | µg/g | 100% |
| Yttrium | 7440-65-5 | < | 9.48E+00 | µg/g | 100% |
| Zinc | 7440-66-6 | | 4.43E+02 | µg/g | 18% |
| Zirconium | 7440-67-7 | | 1.08E+01 | µg/g | 56% |

CAS = Chemical Abstracts Service Registry Number.
< = Below.
RSD = Relative Standard Deviation, representing the uncertainty of the concentration estimate.

**Table A-2. Average Post-Retrieval Waste Inventory. (4 sheets)**

| CAS Number | Constituent Name | Detection Limit | Inventory | Inventory Units |
|---|---|---|---|---|
| 71-55-6 | 1,1,1-Trichloroethane | < | 8.20E-06 | kg |
| 79-34-5 | 1,1,2,2-Tetrachloroethane | < | 5.96E-06 | kg |
| 76-13-1 | 1,1,2-Trichloro-1,2,2-trifluoroethane | < | 9.27E-06 | kg |
| 79-00-5 | 1,1,2-Trichloroethane | < | 5.96E-06 | kg |
| 75-35-4 | 1,1-Dichloroethene | < | 9.44E-06 | kg |
| 120-82-1 | 1,2,4-Trichlorobenzene | < | 9.36E-06 | kg |
| 95-50-1 | 1,2-Dichlorobenzene | < | 4.45E-01 | kg |
| 107-06-2 | 1,2-Dichloroethane | < | 5.86E-06 | kg |
| 106-46-7 | 1,4-Dichlorobenzene | < | 2.77E-01 | kg |
| 71-36-3 | 1-Butanol | < | 1.15E+00 | kg |
| 95-95-4 | 2,4,5-Trichlorophenol | < | 2.57E-01 | kg |
| 88-06-2 | 2,4,6-Trichlorophenol | < | 2.64E-01 | kg |
| 121-14-2 | 2,4-Dinitrotoluene | < | 2.99E-01 | kg |
| 128-37-0 | 2,6-Bis(1,1-dimethylethyl)-4-methylphenol | < | 7.91E-01 | kg |
| 78-93-3 | 2-Butanone | | 3.99E-06 | kg |
| 95-57-8 | 2-Chlorophenol | < | 2.73E-01 | kg |
| 110-80-5 | 2-Ethoxyethanol | < | 6.17E-01 | kg |
| 95-48-7 | 2-Methylphenol | < | 2.83E-01 | kg |
| 88-75-5 | 2-Nitrophenol | < | 2.51E-01 | kg |
| 79-46-9 | 2-Nitropropane | < | 1.43E-05 | kg |
| 59-50-7 | 4-Chloro-3-methylphenol | < | 2.80E-01 | kg |
| 100-02-7 | 4-Nitrophenol | < | 2.61E-01 | kg |
| 83-32-9 | Acenaphthene | < | 2.86E-01 | kg |
| 71-50-1 | Acetate | < | 2.13E+00 | kg |
| 67-64-1 | Acetone | | 1.44E-05 | kg |
| 7429-90-5 | Aluminum | | 4.17E+00 | kg |
| 14596-10-2 | Americium-241 | | 2.50E+00 | Ci |
| 14798-03-9 | Ammonium Ion by IC | | 3.52E-02 | kg |
| 7440-36-0 | Antimony | < | 9.04E-02 | kg |
| 14234-35-6 | Antimony-125 | < | 6.82E-01 | Ci |
| 1336-36-3 | Aroclors (Total PCB) | < | 6.92E-05 | kg |
| 7440-38-2 | Arsenic | < | 1.14E-01 | kg |
| 7440-39-3 | Barium | | 1.60E-01 | kg |
| 71-43-2 | Benzene | < | 5.74E-06 | kg |
| 7440-41-7 | Beryllium | < | 1.45E-02 | kg |
| 7440-69-9 | Bismuth | | 6.19E-01 | kg |
| 7440-42-8 | Boron | < | 4.69E-02 | kg |
| 24959-67-9 | Bromide | < | 2.69E+00 | kg |
| 85-68-7 | Butylbenzylphthalate | < | 5.72E-01 | kg |
| 7440-43-9 | Cadmium | | 9.29E-03 | kg |
| 7440-70-2 | Calcium | | 6.86E+00 | kg |
| 75-15-0 | Carbon disulfide | < | 8.49E-06 | kg |
| 56-23-5 | Carbon tetrachloride | < | 1.05E-05 | kg |

**Table A-2. Average Post-Retrieval Waste Inventory. (4 sheets)**

| CAS Number | Constituent Name | Detection Limit | Inventory | Inventory Units |
|---|---|---|---|---|
| 14762-75-5 | Carbon-14 | | 7.76E-04 | Ci |
| 7440-45-1 | Cerium | < | 1.27E-01 | kg |
| 10045-97-3 | Cesium-137 | | 9.84E+00 | Ci |
| 16887-00-6 | Chloride | | 2.98E-01 | kg |
| 108-90-7 | Chlorobenzene | < | 7.07E-06 | kg |
| 67-66-3 | Chloroform | < | 8.68E-06 | kg |
| 7440-47-3 | Chromium | | 1.23E+01 | kg |
| 7440-48-4 | Cobalt | | 8.56E-02 | kg |
| 10198-40-0 | Cobalt-60 | < | 2.55E-01 | Ci |
| 7440-50-8 | Copper | | 6.13E-01 | kg |
| 1319-77-3 | Cresol | < | 5.40E-01 | kg |
| 108-39-4 | Cresol (m) | < | 2.73E-01 | kg |
| 106-44-5 | Cresol (p) | < | 2.73E-01 | kg |
| 15510-73-3 | Curium-242 | | 9.03E-02 | Ci |
| 15757-87-6 | Curium-243 | | 4.41E-03 | Ci |
| 13981-15-2 | Curium-244 | | 9.69E-02 | Ci |
| 57-12-5 | Cyanide | | 2.08E-03 | kg |
| 108-94-1 | Cyclohexanone | < | 1.86E+00 | kg |
| 84-74-2 | Di-n-butylphthalate | < | 1.86E+00 | kg |
| 117-84-0 | Di-n-octylphthalate | < | 3.31E-01 | kg |
| 141-78-6 | Ethyl acetate | < | 8.88E-06 | kg |
| 60-29-7 | Ethyl ether | < | 8.11E-06 | kg |
| 100-41-4 | Ethylbenzene | < | 1.43E-05 | kg |
| 7440-53-1 | Europium | | 6.23E-02 | kg |
| 14683-23-9 | Europium-152 | < | 1.11E+00 | Ci |
| 15585-10-1 | Europium-154 | < | 7.80E-01 | Ci |
| 14391-16-3 | Europium-155 | < | 4.28E-01 | Ci |
| 206-44-0 | Fluoranthene | < | 2.96E-01 | kg |
| 16984-48-8 | Fluoride | | 2.73E+00 | kg |
| 12311-97-6 | Formate | < | 2.13E+00 | kg |
| 666-14-8 | Glycolate | < | 1.76E+00 | kg |
| 87-68-3 | Hexachlorobutadiene | < | 2.99E-01 | kg |
| 67-72-1 | Hexachloroethane | < | 1.50E-02 | kg |
| 108-10-1 | Hexone | | 2.30E-06 | kg |
| 15046-84-1 | Iodine-129 | < | 2.89E-04 | Ci |
| 7439-89-6 | Iron | | 1.12E+02 | kg |
| 78-83-1 | Isobutanol | < | 1.51E+00 | kg |
| 7439-91-0 | Lanthanum | < | 1.23E-02 | kg |
| 7439-92-1 | Lead | | 6.34E+00 | kg |
| 7439-93-2 | Lithium | < | 1.45E-02 | kg |
| 7439-95-4 | Magnesium | | 8.45E-01 | kg |
| 7439-96-5 | Manganese | | 1.93E+01 | kg |
| 7439-97-6 | Mercury | | 1.08E-01 | kg |
| 75-09-2 | Methylenechloride | < | 7.01E-06 | kg |

**Table A-2. Average Post-Retrieval Waste Inventory. (4 sheets)**

| CAS Number | Constituent Name | Detection Limit | Inventory | Inventory Units |
|---|---|---|---|---|
| 7439-98-7 | Molybdenum | < | 1.81E-02 | kg |
| 59-89-2 | Morpholine, 4-nitroso- | < | 6.23E-01 | kg |
| 91-20-3 | Naphthalene | < | 2.83E-01 | kg |
| 7440-00-8 | Neodymium | < | 7.23E-02 | kg |
| 13994-20-2 | Neptunium-237 | | 3.48E-03 | Ci |
| 7440-02-0 | Nickel | | 6.24E+00 | kg |
| 13981-37-8 | Nickel-63 | | 9.31E-01 | Ci |
| 7440-03-1 | Niobium | < | 1.12E-01 | kg |
| 14797-55-8 | Nitrate | | 1.37E+00 | kg |
| 14797-65-0 | Nitrite | | 5.34E-01 | kg |
| 98-95-3 | Nitrobenzene | < | 2.99E-01 | kg |
| 621-64-7 | N-Nitroso-di-n-propylamine | < | 2.64E-01 | kg |
| 338-70-5 | Oxalate | | 5.17E+01 | kg |
| 7440-05-3 | Palladium | | 1.48E+00 | kg |
| 87-86-5 | Pentachlorophenol | < | 2.21E-01 | kg |
| 108-95-2 | Phenol | < | 2.73E-01 | kg |
| 14265-44-2 | Phosphate | | 5.54E+01 | kg |
| 13981-16-3 | Plutonium-238 | < | 6.97E-01 | Ci |
| 15117-48-3 | Plutonium-239 | | 1.60E+01 | Ci |
| 14119-33-6 | Plutonium-240 | | 3.45E+00 | Ci |
| 14119-32-5 | Plutonium-241 | | 1.67E+01 | Ci |
| 7440-09-7 | Potassium | < | 9.04E-01 | kg |
| 7440-10-0 | Praseodymium | | 2.96E-01 | kg |
| 129-00-0 | Pyrene | < | 2.83E-01 | kg |
| 110-86-1 | Pyridine | < | 2.61E-01 | kg |
| 7440-16-6 | Rhodium | < | 4.15E-01 | kg |
| 7440-17-7 | Rubidium | < | 6.22E+00 | kg |
| 7440-18-8 | Ruthenium | | 1.28E-01 | kg |
| 7440-19-9 | Samarium | < | 3.61E-02 | kg |
| 7782-49-2 | Selenium | < | 1.16E-01 | kg |
| 15758-45-9 | Selenium-79 | < | 9.30E-04 | Ci |
| 7440-21-3 | Silicon | | 7.09E+00 | kg |
| 7440-22-4 | Silver | < | 1.24E-02 | kg |
| 7440-23-5 | Sodium | | 4.98E+01 | kg |
| 7440-24-6 | Strontium | | 9.23E-01 | kg |
| 10098-97-2 | Strontium-89/90 | | 2.44E+02 | Ci |
| 14808-79-8 | Sulfate | | 3.71E+00 | kg |
| 18496-25-8 | Sulfide | < | 1.03E-02 | kg |
| 7440-25-7 | Tantalum | < | 1.14E-01 | kg |
| 14133-76-7 | Technetium-99 | | 2.66E-03 | Ci |
| 13494-80-9 | Tellurium | < | 1.45E-01 | kg |
| 127-18-4 | Tetrachloroethene | < | 7.49E-06 | kg |
| 7440-28-0 | Thallium | < | 3.35E-01 | kg |
| 7440-29-1 | Thorium | | 4.08E-02 | kg |

**Table A-2. Average Post-Retrieval Waste Inventory. (4 sheets)**

| CAS Number | Constituent Name | Detection Limit | Inventory | Inventory Units |
|---|---|---|---|---|
| 14274-82-9 | Thorium-228 | | 7.26E-06 | Ci |
| 14269-63-7 | Thorium-230 | < | 7.45E-02 | Ci |
| NA | Thorium-232 | | 4.09E-06 | Ci |
| 7440-31-5 | Tin | | 1.32E-01 | kg |
| 7440-32-6 | Titanium | | 1.45E-02 | kg |
| 108-88-3 | Toluene | < | 6.69E-06 | kg |
| 10061-02-6 | Trans-1,3-Dichloropropene | < | 5.83E-06 | kg |
| 126-73-8 | Tributyl phosphate | | 2.02E+01 | kg |
| 79-01-6 | Trichloroethene | < | 1.14E-05 | kg |
| 75-69-4 | Trichlorofluoromethane | < | 8.55E-06 | kg |
| 15086-10-9 | Tritium | < | 6.87E-03 | Ci |
| 7440-33-7 | Tungsten | | 1.00E+00 | kg |
| 7440-61-1 | Uranium | | 1.36E+02 | kg |
| 13968-55-3 | Uranium-233 | | 1.41E-05 | Ci |
| 13966-29-5 | Uranium-234 | | 4.54E-02 | Ci |
| 15117-96-1 | Uranium-235 | | 1.92E-03 | Ci |
| 13982-70-2 | Uranium-236 | | 1.09E-03 | Ci |
| NA | Uranium-238 | | 4.55E-02 | Ci |
| 7440-62-2 | Vanadium | < | 1.16E-02 | kg |
| 75-01-4 | Vinyl chloride | < | 4.05E-06 | kg |
| 108-38-3 | Xylene (m) | < | 1.62E-05 | kg |
| 95-47-6 | Xylene (o) | < | 5.07E-06 | kg |
| 106-42-3 | Xylene (p) | < | 1.62E-05 | kg |
| 1330-20-7 | Xylenes (total) | < | 2.10E-05 | kg |
| 7440-65-5 | Yttrium | < | 9.04E-03 | kg |
| 7440-66-6 | Zinc | | 4.23E-01 | kg |
| 7440-67-7 | Zirconium | | 1.03E-02 | kg |

CAS = Chemical Abstracts Service Registry Number.
< = Below.
NA = not available

**Table A-3. 95% Upper Confidence Level Post-Retrieval Waste Inventory. (4 sheets)**

| CAS Number | Constituent Name | Detection Limit | Inventory | Inventory Units |
|---|---|---|---|---|
| 71-55-6 | 1,1,1-Trichloroethane | < | 2.47E-05 | kg |
| 79-34-5 | 1,1,2,2-Tetrachloroethane | < | 1.80E-05 | kg |
| 76-13-1 | 1,1,2-Trichloro-1,2,2-trifluoroethane | < | 2.79E-05 | kg |
| 79-00-5 | 1,1,2-Trichloroethane | < | 1.80E-05 | kg |
| 75-35-4 | 1,1-Dichloroethene | < | 2.85E-05 | kg |
| 120-82-1 | 1,2,4-Trichlorobenzene | < | 2.82E-05 | kg |
| 95-50-1 | 1,2-Dichlorobenzene | < | 1.34E+00 | kg |
| 107-06-2 | 1,2-Dichloroethane | < | 1.77E-05 | kg |
| 106-46-7 | 1,4-Dichlorobenzene | < | 8.34E-01 | kg |
| 71-36-3 | 1-Butanol | < | 3.47E+00 | kg |
| 95-95-4 | 2,4,5-Trichlorophenol | < | 7.76E-01 | kg |
| 88-06-2 | 2,4,6-Trichlorophenol | < | 7.95E-01 | kg |
| 121-14-2 | 2,4-Dinitrotoluene | < | 9.01E-01 | kg |
| 128-37-0 | 2,6-Bis(1,1-dimethylethyl)-4-methylphenol | < | 2.39E+00 | kg |
| 78-93-3 | 2-Butanone | | 1.01E-05 | kg |
| 95-57-8 | 2-Chlorophenol | < | 8.24E-01 | kg |
| 110-80-5 | 2-Ethoxyethanol | < | 1.86E+00 | kg |
| 95-48-7 | 2-Methylphenol | < | 8.53E-01 | kg |
| 88-75-5 | 2-Nitrophenol | < | 7.57E-01 | kg |
| 79-46-9 | 2-Nitropropane | < | 4.31E-05 | kg |
| 59-50-7 | 4-Chloro-3-methylphenol | < | 8.43E-01 | kg |
| 100-02-7 | 4-Nitrophenol | < | 7.86E-01 | kg |
| 83-32-9 | Acenaphthene | < | 8.63E-01 | kg |
| 71-50-1 | Acetate | < | 6.44E+00 | kg |
| 67-64-1 | Acetone | | 3.64E-05 | kg |
| 7429-90-5 | Aluminum | | 5.44E+00 | kg |
| 14596-10-2 | Americium-241 | | 4.19E+00 | Ci |
| 14798-03-9 | Ammonium Ion by IC | | 7.39E-02 | kg |
| 7440-36-0 | Antimony | < | 2.72E-01 | kg |
| 14234-35-6 | Antimony-125 | < | 2.06E+00 | Ci |
| 1336-36-3 | Aroclors (Total PCB) | < | 1.19E-04 | kg |
| 7440-38-2 | Arsenic | < | 3.43E-01 | kg |
| 7440-39-3 | Barium | | 2.56E-01 | kg |
| 71-43-2 | Benzene | < | 1.73E-05 | kg |
| 7440-41-7 | Beryllium | < | 4.36E-02 | kg |
| 7440-69-9 | Bismuth | | 1.09E+00 | kg |
| 7440-42-8 | Boron | < | 1.41E-01 | kg |
| 24959-67-9 | Bromide | < | 8.12E+00 | kg |
| 85-68-7 | Butylbenzylphthalate | < | 1.73E+00 | kg |
| 7440-43-9 | Cadmium | | 2.27E-02 | kg |
| 7440-70-2 | Calcium | | 1.02E+01 | kg |
| 75-15-0 | Carbon disulfide | < | 2.56E-05 | kg |
| 56-23-5 | Carbon tetrachloride | < | 3.16E-05 | kg |

**Table A-3. 95% Upper Confidence Level Post-Retrieval Waste Inventory. (4 sheets)**

| CAS Number | Constituent Name | Detection Limit | Inventory | Inventory Units |
|---|---|---|---|---|
| 14762-75-5 | Carbon-14 | | 1.39E-03 | Ci |
| 7440-45-1 | Cerium | < | 3.81E-01 | kg |
| 10045-97-3 | Cesium-137 | | 1.30E+01 | Ci |
| 16887-00-6 | Chloride | | 6.19E-01 | kg |
| 108-90-7 | Chlorobenzene | < | 2.13E-05 | kg |
| 67-66-3 | Chloroform | < | 2.62E-05 | kg |
| 7440-47-3 | Chromium | | 2.54E+01 | kg |
| 7440-48-4 | Cobalt | | 1.25E-01 | kg |
| 10198-40-0 | Cobalt-60 | < | 7.70E-01 | Ci |
| 7440-50-8 | Copper | | 8.68E-01 | kg |
| 1319-77-3 | Cresol | < | 1.63E+00 | kg |
| 108-39-4 | Cresol (m) | < | 8.24E-01 | kg |
| 106-44-5 | Cresol (p) | < | 8.24E-01 | kg |
| 15510-73-3 | Curium-242 | | 1.51E-01 | Ci |
| 15757-87-6 | Curium-243 | | 7.37E-03 | Ci |
| 13981-15-2 | Curium-244 | | 1.62E-01 | Ci |
| 57-12-5 | Cyanide | | 3.33E-03 | kg |
| 108-94-1 | Cyclohexanone | < | 5.61E+00 | kg |
| 84-74-2 | Di-n-butylphthalate | < | 5.62E+00 | kg |
| 117-84-0 | Di-n-octylphthalate | < | 9.97E-01 | kg |
| 141-78-6 | Ethyl acetate | < | 2.68E-05 | kg |
| 60-29-7 | Ethyl ether | < | 2.44E-05 | kg |
| 100-41-4 | Ethylbenzene | < | 4.31E-05 | kg |
| 7440-53-1 | Europium | | 8.15E-02 | kg |
| 14683-23-9 | Europium-152 | < | 3.35E+00 | Ci |
| 15585-10-1 | Europium-154 | < | 2.35E+00 | Ci |
| 14391-16-3 | Europium-155 | < | 1.29E+00 | Ci |
| 206-44-0 | Fluoranthene | < | 8.91E-01 | kg |
| 16984-48-8 | Fluoride | | 5.00E+00 | kg |
| 12311-97-6 | Formate | < | 6.44E+00 | kg |
| 666-14-8 | Glycolate | < | 5.32E+00 | kg |
| 87-68-3 | Hexachlorobutadiene | < | 9.01E-01 | kg |
| 67-72-1 | Hexachloroethane | < | 4.53E-02 | kg |
| 108-10-1 | Hexone | | 5.51E-06 | kg |
| 15046-84-1 | Iodine-129 | < | 8.73E-04 | Ci |
| 7439-89-6 | Iron | | 2.02E+02 | kg |
| 78-83-1 | Isobutanol | < | 4.56E+00 | kg |
| 7439-91-0 | Lanthanum | < | 3.70E-02 | kg |
| 7439-92-1 | Lead | | 8.86E+00 | kg |
| 7439-93-2 | Lithium | < | 4.36E-02 | kg |
| 7439-95-4 | Magnesium | | 1.61E+00 | kg |
| 7439-96-5 | Manganese | | 3.96E+01 | kg |
| 7439-97-6 | Mercury | | 1.51E-01 | kg |
| 75-09-2 | Methylenechloride | < | 2.11E-05 | kg |

**Table A-3. 95% Upper Confidence Level Post-Retrieval Waste Inventory. (4 sheets)**

| CAS Number | Constituent Name | Detection Limit | Inventory | Inventory Units |
|---|---|---|---|---|
| 7439-98-7 | Molybdenum | < | 5.45E-02 | kg |
| 59-89-2 | Morpholine, 4-nitroso- | < | 1.88E+00 | kg |
| 91-20-3 | Naphthalene | < | 8.53E-01 | kg |
| 7440-00-8 | Neodymium | < | 2.18E-01 | kg |
| 13994-20-2 | Neptunium-237 | | 5.15E-03 | Ci |
| 7440-02-0 | Nickel | | 1.29E+01 | kg |
| 13981-37-8 | Nickel-63 | | 1.41E+00 | Ci |
| 7440-03-1 | Niobium | < | 3.36E-01 | kg |
| 14797-55-8 | Nitrate | | 2.10E+00 | kg |
| 14797-65-0 | Nitrite | | 8.88E-01 | kg |
| 98-95-3 | Nitrobenzene | < | 9.01E-01 | kg |
| 621-64-7 | N-Nitroso-di-n-propylamine | < | 7.95E-01 | kg |
| 338-70-5 | Oxalate | | 1.14E+02 | kg |
| 7440-05-3 | Palladium | | 1.85E+00 | kg |
| 87-86-5 | Pentachlorophenol | < | 6.66E-01 | kg |
| 108-95-2 | Phenol | < | 8.24E-01 | kg |
| 14265-44-2 | Phosphate | | 8.29E+01 | kg |
| 13981-16-3 | Plutonium-238 | < | 2.10E+00 | Ci |
| 15117-48-3 | Plutonium-239 | | 2.77E+01 | Ci |
| 14119-33-6 | Plutonium-240 | | 5.98E+00 | Ci |
| 14119-32-5 | Plutonium-241 | | 2.89E+01 | Ci |
| 7440-09-7 | Potassium | < | 2.72E+00 | kg |
| 7440-10-0 | Praseodymium | | 7.46E-01 | kg |
| 129-00-0 | Pyrene | < | 8.53E-01 | kg |
| 110-86-1 | Pyridine | < | 7.86E-01 | kg |
| 7440-16-6 | Rhodium | < | 1.25E+00 | kg |
| 7440-17-7 | Rubidium | < | 1.87E+01 | kg |
| 7440-18-8 | Ruthenium | | 1.71E-01 | kg |
| 7440-19-9 | Samarium | < | 1.09E-01 | kg |
| 7782-49-2 | Selenium | < | 3.50E-01 | kg |
| 15758-45-9 | Selenium-79 | < | 2.80E-03 | Ci |
| 7440-21-3 | Silicon | | 1.15E+01 | kg |
| 7440-22-4 | Silver | < | 3.75E-02 | kg |
| 7440-23-5 | Sodium | | 6.98E+01 | kg |
| 7440-24-6 | Strontium | | 1.70E+00 | kg |
| 10098-97-2 | Strontium-89/90 | | 3.36E+02 | Ci |
| 14808-79-8 | Sulfate | | 5.40E+00 | kg |
| 18496-25-8 | Sulfide | < | 3.09E-02 | kg |
| 7440-25-7 | Tantalum | < | 3.43E-01 | kg |
| 14133-76-7 | Technetium-99 | | 4.79E-03 | Ci |
| 13494-80-9 | Tellurium | < | 4.36E-01 | kg |
| 127-18-4 | Tetrachloroethene | < | 2.26E-05 | kg |
| 7440-28-0 | Thallium | < | 1.01E+00 | kg |
| 7440-29-1 | Thorium | | 8.22E-02 | kg |

**Table A-3. 95% Upper Confidence Level Post-Retrieval Waste Inventory. (4 sheets)**

| CAS Number | Constituent Name | Detection Limit | Inventory | Inventory Units |
|---|---|---|---|---|
| 14274-82-9 | Thorium-228 | | 1.28E-05 | Ci |
| 14269-63-7 | Thorium-230 | < | 2.25E-01 | Ci |
| NA | Thorium-232 | | 7.85E-06 | Ci |
| 7440-31-5 | Tin | | 1.65E-01 | kg |
| 7440-32-6 | Titanium | | 5.19E-02 | kg |
| 108-88-3 | Toluene | < | 2.02E-05 | kg |
| 10061-02-6 | Trans-1,3-Dichloropropene | < | 1.76E-05 | kg |
| 126-73-8 | Tributyl phosphate | | 4.53E+01 | kg |
| 79-01-6 | Trichloroethene | < | 3.45E-05 | kg |
| 75-69-4 | Trichlorofluoromethane | < | 2.58E-05 | kg |
| 15086-10-9 | Tritium | < | 2.07E-02 | Ci |
| 7440-33-7 | Tungsten | | 1.26E+00 | kg |
| 7440-61-1 | Uranium | | 2.12E+02 | kg |
| 13968-55-3 | Uranium-233 | | 2.19E-05 | Ci |
| 13966-29-5 | Uranium-234 | | 7.07E-02 | Ci |
| 15117-96-1 | Uranium-235 | | 2.99E-03 | Ci |
| 13982-70-2 | Uranium-236 | | 1.69E-03 | Ci |
| NA | Uranium-238 | | 7.08E-02 | Ci |
| 7440-62-2 | Vanadium | < | 3.50E-02 | kg |
| 75-01-4 | Vinyl chloride | < | 1.22E-05 | kg |
| 108-38-3 | Xylene (m) | < | 4.89E-05 | kg |
| 95-47-6 | Xylene (o) | < | 1.53E-05 | kg |
| 106-42-3 | Xylene (p) | < | 4.89E-05 | kg |
| 1330-20-7 | Xylenes (total) | < | 6.33E-05 | kg |
| 7440-65-5 | Yttrium | < | 2.72E-02 | kg |
| 7440-66-6 | Zinc | | 6.07E-01 | kg |
| 7440-67-7 | Zirconium | | 2.22E-02 | kg |

CAS = Chemical Abstracts Service Registry Number.
< = Below.
NA = not available

**Table A-4. Average Pre-Retrieval Waste Inventory. (4 sheets)**

| CAS Number | Constituent Name | Detection Limit | Inventory | Inventory Units |
|---|---|---|---|---|
| 71-55-6 | 1,1,1-Trichloroethane | < | 1.86E-05 | kg |
| 79-34-5 | 1,1,2,2-Tetrachloroethane | < | 1.36E-05 | kg |
| 76-13-1 | 1,1,2-Trichloro-1,2,2-trifluoroethane | < | 2.11E-05 | kg |
| 79-00-5 | 1,1,2-Trichloroethane | < | 1.36E-05 | kg |
| 75-35-4 | 1,1-Dichloroethene | < | 2.16E-05 | kg |
| 120-82-1 | 1,2,4-Trichlorobenzene | < | 2.11E-05 | kg |
| 95-50-1 | 1,2-Dichlorobenzene | < | 1.57E-01 | kg |
| 107-06-2 | 1,2-Dichloroethane | < | 1.34E-05 | kg |
| 106-46-7 | 1,4-Dichlorobenzene | < | 1.57E-01 | kg |
| 71-36-3 | 1-Butanol | < | 1.57E-01 | kg |
| 95-95-4 | 2,4,5-Trichlorophenol | < | 7.99E-02 | kg |
| 88-06-2 | 2,4,6-Trichlorophenol | < | 8.46E-02 | kg |
| 121-14-2 | 2,4-Dinitrotoluene | < | 1.10E-01 | kg |
| 128-37-0 | 2,6-Bis(1,1-dimethylethyl)-4-methylphenol | < | 1.08E-01 | kg |
| 78-93-3 | 2-Butanone | | 8.46E-05 | kg |
| 95-57-8 | 2-Chlorophenol | < | 1.55E-01 | kg |
| 110-80-5 | 2-Ethoxyethanol | < | 8.46E-02 | kg |
| 95-48-7 | 2-Methylphenol | < | 3.01E-01 | kg |
| 88-75-5 | 2-Nitrophenol | < | 1.81E-01 | kg |
| 79-46-9 | 2-Nitropropane | < | 3.29E-05 | kg |
| 59-50-7 | 4-Chloro-3-methylphenol | < | 5.64E-02 | kg |
| 100-02-7 | 4-Nitrophenol | < | 8.46E-02 | kg |
| 83-32-9 | Acenaphthene | < | 1.76E-01 | kg |
| 71-50-1 | Acetate | < | 1.05E+01 | kg |
| 67-64-1 | Acetone | | 3.29E-04 | kg |
| 7429-90-5 | Aluminum | | 1.31E+01 | kg |
| 14596-10-2 | Americium-241 | | 5.38E+00 | Ci |
| 14798-03-9 | Ammonium Ion by IC | | 1.80E-01 | kg |
| 7440-36-0 | Antimony | | 2.67E-01 | kg |
| 14234-35-6 | Antimony-125 | < | 4.51E-01 | Ci |
| 1336-36-3 | Aroclors (Total PCB) | | 3.89E-04 | kg |
| 7440-38-2 | Arsenic | < | 5.61E-01 | kg |
| 7440-39-3 | Barium | | 2.92E-01 | kg |
| 71-43-2 | Benzene | < | 1.32E-05 | kg |
| 7440-41-7 | Beryllium | < | 1.10E-02 | kg |
| 7440-69-9 | Bismuth | | 8.91E-01 | kg |
| 7440-42-8 | Boron | < | 2.31E-01 | kg |
| 24959-67-9 | Bromide | < | 1.33E+01 | kg |
| 85-68-7 | Butylbenzylphthalate | < | 1.86E-01 | kg |
| 7440-43-9 | Cadmium | | 2.66E-02 | kg |
| 7440-70-2 | Calcium | | 2.05E+01 | kg |
| 75-15-0 | Carbon disulfide | < | 1.93E-05 | kg |
| 56-23-5 | Carbon tetrachloride | < | 2.47E-05 | kg |

**Table A-4. Average Pre-Retrieval Waste Inventory. (4 sheets)**

| CAS Number | Constituent Name | Detection Limit | Inventory | Inventory Units |
|---|---|---|---|---|
| 14762-75-5 | Carbon-14 | | 3.82E-03 | Ci |
| 7440-45-1 | Cerium | < | 2.31E-01 | kg |
| 10045-97-3 | Cesium-137 | | 4.76E+01 | Ci |
| 16887-00-6 | Chloride | | 6.03E+00 | kg |
| 108-90-7 | Chlorobenzene | < | 1.62E-05 | kg |
| 67-66-3 | Chloroform | < | 1.97E-05 | kg |
| 7440-47-3 | Chromium | | 3.28E+01 | kg |
| 7440-48-4 | Cobalt | | 1.84E-01 | kg |
| 10198-40-0 | Cobalt-60 | < | 5.07E-02 | Ci |
| 7440-50-8 | Copper | | 8.90E-01 | kg |
| 1319-77-3 | Cresol | < | 4.25E-01 | kg |
| 108-39-4 | Cresol (m) | < | 6.81E-01 | kg |
| 106-44-5 | Cresol (p) | < | 6.81E-01 | kg |
| 15510-73-3 | Curium-242 | | 1.94E-01 | Ci |
| 15757-87-6 | Curium-243 | | 9.47E-03 | Ci |
| 13981-15-2 | Curium-244 | | 2.08E-01 | Ci |
| 57-12-5 | Cyanide | | 2.60E-02 | kg |
| 108-94-1 | Cyclohexanone | < | 2.56E-01 | kg |
| 84-74-2 | Di-n-butylphthalate | < | 2.33E-01 | kg |
| 117-84-0 | Di-n-octylphthalate | < | 1.74E-01 | kg |
| 141-78-6 | Ethyl acetate | < | 2.02E-05 | kg |
| 60-29-7 | Ethyl ether | < | 1.83E-05 | kg |
| 100-41-4 | Ethylbenzene | < | 3.24E-05 | kg |
| 7440-53-1 | Europium | | 3.22E-01 | kg |
| 14683-23-9 | Europium-152 | < | 2.97E-01 | Ci |
| 15585-10-1 | Europium-154 | < | 1.85E-01 | Ci |
| 14391-16-3 | Europium-155 | < | 3.71E-01 | Ci |
| 206-44-0 | Fluoranthene | < | 1.06E-01 | kg |
| 16984-48-8 | Fluoride | | 1.05E+01 | kg |
| 12311-97-6 | Formate | < | 1.05E+01 | kg |
| 666-14-8 | Glycolate | < | 8.69E+00 | kg |
| 87-68-3 | Hexachlorobutadiene | < | 3.90E-02 | kg |
| 67-72-1 | Hexachloroethane | < | 7.40E-02 | kg |
| 108-10-1 | Hexone | | 3.29E-05 | kg |
| 15046-84-1 | Iodine-129 | < | 1.43E-03 | Ci |
| 7439-89-6 | Iron | | 6.26E+02 | kg |
| 78-83-1 | Isobutanol | < | 2.11E-01 | kg |
| 7439-91-0 | Lanthanum | < | 6.05E-02 | kg |
| 7439-92-1 | Lead | | 2.08E+01 | kg |
| 7439-93-2 | Lithium | < | 2.20E-02 | kg |
| 7439-95-4 | Magnesium | | 3.88E+00 | kg |
| 7439-96-5 | Manganese | | 7.91E+01 | kg |
| 7439-97-6 | Mercury | | 3.83E-01 | kg |
| 75-09-2 | Methylenechloride | < | 1.60E-05 | kg |

**Table A-4. Average Pre-Retrieval Waste Inventory. (4 sheets)**

| CAS Number | Constituent Name | Detection Limit | Inventory | Inventory Units |
|---|---|---|---|---|
| 7439-98-7 | Molybdenum | < | 5.94E-02 | kg |
| 59-89-2 | Morpholine, 4-nitroso- | < | 8.93E-02 | kg |
| 91-20-3 | Naphthalene | < | 7.05E-02 | kg |
| 7440-00-8 | Neodymium | < | 1.10E-01 | kg |
| 13994-20-2 | Neptunium-237 | | 5.33E-03 | Ci |
| 7440-02-0 | Nickel | | 1.04E+01 | kg |
| 13981-37-8 | Nickel-63 | | 6.27E-01 | Ci |
| 7440-03-1 | Niobium | < | 5.50E-01 | kg |
| 14797-55-8 | Nitrate | | 3.26E+02 | kg |
| 14797-65-0 | Nitrite | | 1.15E+02 | kg |
| 98-95-3 | Nitrobenzene | < | 7.52E-02 | kg |
| 621-64-7 | N-Nitroso-di-n-propylamine | < | 1.01E-01 | kg |
| 338-70-5 | Oxalate | | 1.71E+02 | kg |
| 7440-05-3 | Palladium | | 7.27E+00 | kg |
| 87-86-5 | Pentachlorophenol | < | 7.75E-02 | kg |
| 108-95-2 | Phenol | < | 3.55E-01 | kg |
| 14265-44-2 | Phosphate | | 8.13E+01 | kg |
| 13981-16-3 | Plutonium-238 | < | 2.79E+00 | Ci |
| 15117-48-3 | Plutonium-239 | | 3.39E+01 | Ci |
| 14119-33-6 | Plutonium-240 | | 7.32E+00 | Ci |
| 14119-32-5 | Plutonium-241 | | 3.54E+01 | Ci |
| 7440-09-7 | Potassium | | 3.89E+00 | kg |
| 7440-10-0 | Praseodymium | < | 5.72E-01 | kg |
| 129-00-0 | Pyrene | < | 1.71E-01 | kg |
| 110-86-1 | Pyridine | < | 1.06E-01 | kg |
| 7440-16-6 | Rhodium | < | 5.72E-01 | kg |
| 7440-17-7 | Rubidium | < | 5.61E+00 | kg |
| 7440-18-8 | Ruthenium | | 6.32E-01 | kg |
| 7440-19-9 | Samarium | < | 1.21E-01 | kg |
| 7782-49-2 | Selenium | < | 5.72E-01 | kg |
| 15758-45-9 | Selenium-79 | < | 4.58E-03 | Ci |
| 7440-21-3 | Silicon | | 6.72E+00 | kg |
| 7440-22-4 | Silver | < | 6.05E-02 | kg |
| 7440-23-5 | Sodium | | 6.67E+02 | kg |
| 7440-24-6 | Strontium | | 1.94E+00 | kg |
| 10098-97-2 | Strontium-89/90 | | 4.08E+02 | Ci |
| 14808-79-8 | Sulfate | | 1.83E+01 | kg |
| 18496-25-8 | Sulfide | < | 4.54E-02 | kg |
| 7440-25-7 | Tantalum | < | 5.61E-01 | kg |
| 14133-76-7 | Technetium-99 | | 4.60E-02 | Ci |
| 13494-80-9 | Tellurium | < | 5.61E-01 | kg |
| 127-18-4 | Tetrachloroethene | < | 1.71E-05 | kg |
| 7440-28-0 | Thallium | < | 1.65E+00 | kg |
| 7440-29-1 | Thorium | < | 1.40E-02 | kg |

**Table A-4. Average Pre-Retrieval Waste Inventory. (4 sheets)**

| CAS Number | Constituent Name | Detection Limit | Inventory | Inventory Units |
|---|---|---|---|---|
| 14274-82-9 | Thorium-228 | | 1.58E-05 | Ci |
| 14269-63-7 | Thorium-230 | < | 1.59E-02 | Ci |
| NA | Thorium-232 | < | 1.45E-06 | Ci |
| 7440-31-5 | Tin | | 6.50E-01 | kg |
| 7440-32-6 | Titanium | < | 1.43E-02 | kg |
| 108-88-3 | Toluene | < | 1.53E-05 | kg |
| 10061-02-6 | Trans-1,3-Dichloropropene | < | 1.34E-05 | kg |
| 126-73-8 | Tributyl phosphate | | 5.99E+01 | kg |
| 79-01-6 | Trichloroethene | | 4.93E-05 | kg |
| 75-69-4 | Trichlorofluoromethane | < | 1.95E-05 | kg |
| 15086-10-9 | Tritium | < | 3.02E-03 | Ci |
| 7440-33-7 | Tungsten | | 4.95E+00 | kg |
| 7440-61-1 | Uranium | | 6.17E+02 | kg |
| 13968-55-3 | Uranium-233 | | 6.37E-05 | Ci |
| 13966-29-5 | Uranium-234 | | 2.06E-01 | Ci |
| 15117-96-1 | Uranium-235 | | 8.70E-03 | Ci |
| 13982-70-2 | Uranium-236 | | 4.92E-03 | Ci |
| NA | Uranium-238 | | 2.06E-01 | Ci |
| 7440-62-2 | Vanadium | < | 5.72E-02 | kg |
| 75-01-4 | Vinyl chloride | < | 9.40E-06 | kg |
| 108-38-3 | Xylene (m) | < | 3.69E-05 | kg |
| 95-47-6 | Xylene (o) | < | 1.15E-05 | kg |
| 106-42-3 | Xylene (p) | < | 3.69E-05 | kg |
| 1330-20-7 | Xylenes (total) | < | 4.89E-05 | kg |
| 7440-65-5 | Yttrium | < | 1.10E-02 | kg |
| 7440-66-6 | Zinc | | 1.72E+00 | kg |
| 7440-67-7 | Zirconium | | 3.47E-02 | kg |

# APPENDIX B

# IMPACTS ASSOCIATED WITH THE PRE-RETRIEVAL INVENTORY

**Risk Assessment Based on the Pre-Retrieval Inventory**

At the request of Ecology, the long-term human health impacts associated with the pre-retrieval inventory are provided in this appendix for comparative purposes. The pre-retrieval inventory was calculated using the analytical results from the pre-retrieval samples and the pre-retrieval volume (RPP-RPT-29889 provides a complete discussion as to how the pre-retrieval inventory was calculated). The same methodology used in Section 8.0 was used to calculate the impacts associated with the pre-retrieval inventory.

Table B-1 provides the incremental lifetime cancer risk (ILCR) (industrial and residential scenarios), groundwater dose [all pathways farmer (APF) scenario], and drinking water dose for individual radiological components of the waste prior to retrieval in SST C-201. Results for the ILCR and the Hazard Quotient for individual nonradionuclides are provided in Table B-2.

Table B-3 provides the groundwater cumulative impacts associated with pre-retrieval inventory. For the groundwater path way, Table B-3 shows that the impacts to the groundwater pathway using the pre-retrieval inventory are greater than 2 orders of magnitude below the performance objectives.

Table B-4 provides the results of the inadvertent intruder analysis at 100 years and 500 years after closure. For the pre-retrieval inventory at 100 years after closure, well driller, the rural pasture, and commercial farmer scenarios are all below the performance objectives. However, the suburban garden scenario is approximately a factor of 7.5 over performance objectives at 100 years and is a factor of about 2.2 over the performance objectives at 500 years. This is primarily due to $^{239}Pu$ in the pre-retrieval inventory.

Table B-5 gives a comparison of the average pre-retrieval inventory against the average and upper confidence level 95% post-retrieval inventory.

**Table B-1. Estimated Maximum Incremental Lifetime Cancer Risk/Radiological Dose During the Modeling Period for Radionuclides for the Pre-Retrieval Inventory. (3 sheets)**

| Analyte | Detect | Inventory (Ci) | WMA C Fenceline Conc. (pCi/L) | Peak Year | $K_d$ (mL/g)[a] | Half-Life (yr) | Incremental Lifetime Cancer Risk Scenarios (Groundwater)[b] | | Radiological Dose Groundwater (mrem/yr)[b] | Radiological Dose Beta/Photon (mrem/yr)[b] |
|---|---|---|---|---|---|---|---|---|---|---|
| | | | | | | | Industrial | Residential | All Pathways Farmer | Drinking Water |
| $^{14}C$ | Yes | 3.82E-03 | 5.89E-03 | 9781 | 0 | 5.73E+03 | 4.57E-11 | 3.30E-10 | 2.85E-05 | 1.18E-05 |
| $^{63}Ni$ | Yes | 6.27E-01 | 0 | DNA | 5 | 1.00E+02 | 0 | 0 | 0 | 0 |
| $^{90}Sr$ | Yes | 4.08E+02 | 0 | DNA | 5 | 2.81E+01 | 0 | 0 | 0 | 0 |
| $^{99}Tc$ | Yes | 4.60E-02 | 1.84E-01 | 10461 | 0 | 2.11E+05 | 2.53E-09 | 6.16E-08 | 3.22E-04 | 8.16E-04 |
| $^{137}Cs$ | Yes | 4.76E+01 | 0 | DNA | 5 | 3.00E+01 | 0 | 0 | 0 | 0 |
| $^{228}Th$ | Yes | 1.58E-05 | 0 | DNA | 2 | 1.91E+00 | 0 | 0 | 0 | N/A |
| $^{233}U$ | Yes | 6.37E-05 | 0 | DNA | 0.6 | 1.59E+05 | 0 | 0 | 0 | N/A |
| $^{234}U$ | Yes | 2.06E-01 | 0 | DNA | 0.6 | 2.46E+05 | 0 | 0 | 0 | N/A |
| $^{235}U$ | Yes | 8.70E-03 | 0 | DNA | 0.6 | 7.04E+08 | 0 | 0 | 0 | N/A |
| $^{236}U$ | Yes | 4.92E-03 | 0 | DNA | 0.6 | 2.34E+07 | 0 | 0 | 0 | N/A |
| $^{238}U$ | Yes | 2.06E-01 | 0 | DNA | 0.6 | 4.47E+09 | 0 | 0 | 0 | N/A |
| $^{237}Np$ | Yes | 5.33E-03 | 0 | DNA | 2 | 2.14E+06 | 0 | 0 | 0 | N/A |
| $^{239}Pu$ | Yes | 3.39E+01 | 0 | DNA | 2 | 2.41E+04 | 0 | 0 | 0 | N/A |

**Table B-1. Estimated Maximum Incremental Lifetime Cancer Risk/Radiological Dose During the Modeling Period for Radionuclides for the Pre-Retrieval Inventory. (3 sheets)**

| Analyte | Detect | Inventory (Ci) | WMA C Fenceline Conc. (pCi/L) | Peak Year | $K_d$ (mL/g)[a] | Half-Life (yr) | Incremental Lifetime Cancer Risk Scenarios (Groundwater)[b] | | Radiological Dose Groundwater (mrem/yr)[b] | Radiological Dose Beta/Photon (mrem/yr)[b] |
|---|---|---|---|---|---|---|---|---|---|---|
| | | | | | | | Industrial | Residential | All Pathways Farmer | Drinking Water |
| $^{240}Pu$ | Yes | 7.32E+00 | 0 | DNA | 2 | 6.56E+03 | 0 | 0 | 0 | N/A |
| $^{241}Pu$ | Yes | 3.54E+01 | 0 | DNA | 2 | 1.44E+01 | 0 | 0 | 0 | 0 |
| $^{241}Am$ | Yes | 5.38E+00 | 0 | DNA | 2 | 4.33E+02 | 0 | 0 | 0 | N/A |
| $^{242}Cm$ | Yes | 1.94E-01 | 0 | DNA | 2 | 4.46E-01 | 0 | 0 | 0 | N/A |
| $^{243}Cm$ | Yes | 9.47E-03 | 0 | DNA | 2 | 2.85E+01 | 0 | 0 | 0 | N/A |
| $^{244}Cm$ | Yes | 2.08E-01 | 0 | DNA | 2 | 1.81E+01 | 0 | 0 | 0 | N/A |
| $^{3}H$ | No | 1.51E-03 | 0 | DNA | 0 | 1.23E+01 | 0 | 0 | 0 | 0 |
| $^{60}Co$ | No | 2.54E-02 | 0 | DNA | 0.1 | 5.27E+00 | 0 | 0 | 0 | 0 |
| $^{79}Se$ | No | 2.29E-03 | 0 | DNA | 2 | 8.05E+05 | 0 | 0 | 0 | N/A |
| $^{125}Sb$ | No | 2.26E-01 | 0 | DNA | 1 | 2.73E+00 | 0 | 0 | 0 | 0 |
| $^{129}I$ | No | 7.15E-04 | <0.001[c] | 12032 | 0.2 | 1.57E+07 | Dropped[d] | Dropped[d] | Dropped[d] | Dropped[d] |
| $^{152}Eu$ | No | 1.48E-01 | 0 | DNA | 1 | 1.33E+01 | 0 | 0 | 0 | 0 |
| $^{154}Eu$ | No | 9.25E-02 | 0 | DNA | 1 | 8.59E+00 | 0 | 0 | 0 | 0 |

**Table B-1. Estimated Maximum Incremental Lifetime Cancer Risk/Radiological Dose During the Modeling Period for Radionuclides for the Pre-Retrieval Inventory. (3 sheets)**

| Analyte | Detect | Inventory (Ci) | WMA C Fenceline Conc. (pCi/L) | Peak Year | $K_d$ (mL/g)[a] | Half-Life (yr) | Incremental Lifetime Cancer Risk Scenarios (Groundwater)[b] | | Radiological Dose Groundwater (mrem/yr)[b] | Radiological Dose Beta/Photon (mrem/yr)[b] |
|---|---|---|---|---|---|---|---|---|---|---|
| | | | | | | | Industrial | Residential | All Pathways Farmer | Drinking Water |
| $^{155}$Eu | No | 1.85E-01 | 0 | DNA | 1 | 4.68E+00 | 0 | 0 | 0 | 0 |
| $^{230}$Th | No | 7.95E-03 | 0 | DNA | 2 | 7.54E+04 | 0 | 0 | 0 | N/A |
| $^{232}$Th | No | 7.25E-07 | 0 | DNA | 2 | 1.41E+10 | 0 | 0 | 0 | N/A |
| $^{238}$Pu | No | 1.40E+00 | 0 | DNA | 2 | 8.77E+01 | 0 | 0 | 0 | N/A |
| Performance objective[e] | | | | | | | 1-0E-6 to 1.0E-4[f] | 1-0E-6 to 1.0E-4[f] | 25[g] | 4[h] |

[a] See PNNL-13895, *Hanford Contaminant Distribution Coefficient Database and Users Guide*, Rev. 1, for the basis for the $K_d$ values listed for the radionuclides.
[b] All exposure scenarios are described in HNF-SD-WM-TI-707.
[c] Simulation predicted contaminant arrives at the fenceline, but at a concentration (0.001 pCi/L) that is much below the minimum detection limit for standard analytical methods.
[d] Dropped from the analysis because the simulation predicted concentration (0.001 pCi/L) is much below the minimum detection limit for standard analytical methods.
[e] Performance objectives apply to the cumulative (i.e., all contaminants) for the entire WMA.
[f] EPA/540/R-99/006, *Radiation Risk Assessment at CERCLA Sites: Q & A, Directive* 9200.4-31P.
[g] DOE O 435.1, *Radioactive Waste Management*.
[h] 66 FR 76708, "National Primary Drinking Water Regulations; Radionuclides; Final Rule."

Notes:
DNA = did not arrive at fenceline within the modeling period
N/A = radionuclide is not a beta/photon emitter.
Shaded cells are nondetects and the inventory used in the risk assessment is calculated at one-half the minimum detection limit.

**Table B-2. Estimated Maximum Value for Incremental Lifetime Cancer Risk and Hazard Quotient per Nonradionuclides for the Average Inventory. (10 sheets)**

| Analyte | Detected | Inventory (kg) | WMA C Fenceline Concentration (µg/L) | Peak Year | $K_d$ (mL/g)[a] | Incremental Lifetime Cancer Risk Scenarios (Groundwater)[b] | Hazard Quotient Scenarios (Groundwater)[b] |
|---|---|---|---|---|---|---|---|
| | | | | | | WAC-173-340 Method B | WAC-173-340 Method B |
| Aluminum | Yes | 1.31E+01 | 0 | DNA | 1 | No CPF | 0 |
| Ammonium NH4 | Yes | 1.80E-01 | <0.001[c] | 10481 | 0 | No CPF | No RfD |
| Antimony | Yes | 2.67E-01 | 0 | DNA | 1 | No CPF | 0 |
| Barium | Yes | 2.92E-01 | 0 | DNA | 5 | No CPF | 0 |
| Bismuth | Yes | 8.91E-01 | 3.66E-03 | 10481 | 0 | No CPF | No RfD |
| Cadmium | Yes | 2.66E-02 | 0 | DNA | 1 | No CPF | 0 |
| Calcium | Yes | 2.05E+01 | 0 | DNA | 5 | No CPF | No RfD |
| Chloride | Yes | 6.03E+00 | 2.48E-02 | 10481 | 0 | No CPF | No RfD |
| Chromium | Yes | 3.28E+01 | 1.35E-01 | 10481 | 0 | No CPF | 3.46E-03 |
| Cobalt | Yes | 1.84E-01 | <0.001[c] | 12032 | 0.1 | No CPF | Dropped[d] |
| Copper | Yes | 8.90E-01 | 0 | DNA | 5 | No CPF | 0 |
| Cyanide | Yes | 2.60E-02 | 0 | DNA | 5 | No CPF | 0 |
| Europium | Yes | 3.22E-01 | 0 | DNA | 5 | No CPF | No RfD |
| Fluoride | Yes | 1.05E+01 | 4.31E-02 | 10481 | 0 | No CPF | 4.49E-05 |
| Iron | Yes | 6.26E+02 | 0 | DNA | 5 | No CPF | 0 |

**Table B-2. Estimated Maximum Value for Incremental Lifetime Cancer Risk and Hazard Quotient per Nonradionuclides for the Average Inventory. (10 sheets)**

| Analyte | Detected | Inventory (kg) | WMA C Fenceline Concentration (µg/L) | Peak Year | $K_d$ (mL/g)[a] | Incremental Lifetime Cancer Risk Scenarios (Groundwater)[b] | Hazard Quotient Scenarios (Groundwater)[b] |
|---|---|---|---|---|---|---|---|
| | | | | | | WAC-173-340 Method B | WAC-173-340 Method B |
| Lead | Yes | 2.08E+01 | 0 | DNA | 5 | No CPF | No RfD |
| Magnesium | Yes | 3.88E+00 | 0 | DNA | 5 | No CPF | No RfD |
| Manganese | Yes | 7.91E+01 | 0 | DNA | 1 | No CPF | 0 |
| Mercury | Yes | 3.83E-01 | 0 | DNA | 5 | No CPF | No RfD |
| Nickel | Yes | 1.04E+01 | 0 | DNA | 5 | No CPF | 0 |
| Nitrate | Yes | 3.26E+02 | 1.34E+00 | 10481 | 0 | No CPF | 5.23E-05 |
| Nitrite | Yes | 1.15E+02 | 4.72E-01 | 10481 | 0 | No CPF | 2.95E-04 |
| Oxalate | Yes | 1.71E+02 | 7.02E-01 | 10481 | 0 | No CPF | No RfD |
| Palladium | Yes | 7.27E+00 | 0 | DNA | 5 | No CPF | No RfD |
| Phosphate | Yes | 8.13E+01 | 3.34E-01 | 10481 | 0 | No CPF | No RfD |
| Phosphorus | Yes | 2.65E+01 | 0 | DNA | 5 | No CPF | 0 |
| Potassium | Yes | 3.89E+00 | 1.60E-02 | 10481 | 0 | No CPF | No RfD |
| Ruthenium | Yes | 6.32E-01 | 0 | DNA | 1 | No CPF | No RfD |
| Silicon | Yes | 6.72E+00 | 0 | DNA | 5 | No CPF | No RfD |
| Sodium | Yes | 6.67E+02 | 2.74E+00 | 10481 | 0 | No CPF | No RfD |

**Table B-2. Estimated Maximum Value for Incremental Lifetime Cancer Risk and Hazard Quotient per Nonradionuclides for the Average Inventory. (10 sheets)**

| Analyte | Detected | Inventory (kg) | WMA C Fenceline Concentration (µg/L) | Peak Year | $K_d$ (mL/g)[a] | Incremental Lifetime Cancer Risk Scenarios (Groundwater)[b] | Hazard Quotient Scenarios (Groundwater)[b] |
|---|---|---|---|---|---|---|---|
| | | | | | | WAC-173-340 Method B | WAC-173-340 Method B |
| Strontium | Yes | 1.94E+00 | 0 | DNA | 5 | No CPF | 0 |
| Sulfate | Yes | 1.83E+01 | 7.51E-02 | 10481 | 0 | No CPF | No RfD |
| Sulfur | Yes | 6.10E+00 | 2.50E-02 | 10481 | 0 | No CPF | No RfD |
| Tin | Yes | 6.50E-01 | 0 | DNA | 5 | No CPF | 0 |
| Tungsten | Yes | 4.95E+00 | 2.03E-02 | 10481 | 0 | No CPF | No RfD |
| Uranium | Yes | 6.17E+02 | 0 | DNA | 0.6 | No CPF | 0 |
| Zinc | Yes | 1.72E+00 | 0 | DNA | 5 | No CPF | 0 |
| Zirconium | Yes | 3.47E-02 | 0 | DNA | 5 | No CPF | No RfD |
| 1, 1, 2-Trichloroethylene | Yes | 4.93E-05 | <0.001[c] | 12032 | 0.02 | Dropped[d] | Dropped[d] |
| 2-Butanone(MEK) | Yes | 8.46E-05 | <0.001[c] | 10481 | 0 | No CPF | Dropped[d] |
| 2-Propanone (Acetone) | Yes | 3.29E-04 | <0.001[c] | 10481 | 0 | No CPF | Dropped[d] |
| 4-Methyl-2-pentanone (MIBK) | Yes | 3.29E-05 | <0.001[c] | 12032 | 0.02 | No CPF | Dropped[d] |
| Tributyl phosphate | Yes | 5.99E+01 | 0 | DNA | 0.6 | 0 | 0 |
| Aroclor-1254 | Yes | 4.51E-04 | 0 | DNA | 5 | 0 | 0 |
| Polychlorinated Biphenyls | Yes | 3.89E-04 | 0 | DNA | 5 | 0 | No RfD |

**Table B-2. Estimated Maximum Value for Incremental Lifetime Cancer Risk and Hazard Quotient per Nonradionuclides for the Average Inventory. (10 sheets)**

| Analyte | Detected | Inventory (kg) | WMA C Fenceline Concentration (µg/L) | Peak Year | $K_d$ (mL/g)[a] | Incremental Lifetime Cancer Risk Scenarios (Groundwater)[b] | Hazard Quotient Scenarios (Groundwater)[b] |
|---|---|---|---|---|---|---|---|
| | | | | | | WAC-173-340 Method B | WAC-173-340 Method B |
| Arsenic | No | 2.81E-01 | 0 | DNA | 5 | 0 | 0 |
| Beryllium | No | 5.50E-03 | 0 | DNA | 5 | No CPF | 0 |
| Boron | No | 1.16E-01 | 0 | DNA | 2 | No CPF | 0 |
| Bromide | No | 6.65E+00 | 2.73E-02 | 10481 | 0 | No CPF | No RfD |
| Cerium | No | 1.16E-01 | <0.001[c] | 10481 | 0 | No CPF | No RfD |
| Formate+A2 | No | 5.25E+00 | 2.16E-02 | 10481 | 0 | No CPF | No RfD |
| Lanthanum | No | 3.02E-02 | <0.001[c] | 10481 | 0 | No CPF | No RfD |
| Lithium | No | 1.10E-02 | 0 | DNA | 5 | No CPF | 0 |
| Molybdenum | No | 2.97E-02 | 0 | DNA | 5 | No CPF | 0 |
| Neodymium | No | 5.50E-02 | <0.001[c] | 10481 | 0 | No CPF | No RfD |
| Niobium | No | 2.75E-01 | 0 | DNA | 5 | No CPF | No RfD |
| Praseodymium | No | 2.86E-01 | 1.17E-03 | 10481 | 0 | No CPF | No RfD |
| Rhodium | No | 2.86E-01 | 1.17E-03 | 10481 | 0 | No CPF | No RfD |
| Rubidium | No | 2.81E+00 | 1.15E-02 | 10481 | 0 | No CPF | No RfD |
| Samarium | No | 6.05E-02 | 0 | DNA | 1 | No CPF | No RfD |

**Table B-2. Estimated Maximum Value for Incremental Lifetime Cancer Risk and Hazard Quotient per Nonradionuclides for the Average Inventory. (10 sheets)**

| Analyte | Detected | Inventory (kg) | WMA C Fenceline Concentration (µg/L) | Peak Year | $K_d$ (mL/g)[a] | Incremental Lifetime Cancer Risk Scenarios (Groundwater)[b] | Hazard Quotient Scenarios (Groundwater)[b] |
|---|---|---|---|---|---|---|---|
| | | | | | | WAC-173-340 Method B | WAC-173-340 Method B |
| Selenium | No | 2.86E-01 | 0 | DNA | 5 | No CPF | 0 |
| Silver | No | 3.02E-02 | 0 | DNA | 2 | No CPF | 0 |
| Sulfide | No | 2.27E-02 | <0.001[c] | 10481 | 0 | No CPF | No RfD |
| Tantalum | No | 2.81E-01 | 1.15E-03 | 10481 | 0 | No CPF | No RfD |
| Tellurium | No | 2.81E-01 | 1.15E-03 | 10481 | 0 | No CPF | No RfD |
| Thallium | No | 8.25E-01 | 0 | DNA | 5 | No CPF | 0 |
| Thorium | No | 7.00E-03 | 0 | DNA | 1 | No CPF | No RfD |
| Titanium | No | 7.15E-03 | 0 | DNA | 5 | No CPF | No RfD |
| Vanadium | No | 2.86E-02 | 0 | DNA | 5 | No CPF | 0 |
| Yttrium | No | 5.50E-03 | <0.001[c] | 10481 | 0 | No CPF | No RfD |
| 1, 1, 1-Trichloroethane | No | 9.30E-06 | <0.001[c] | 12032 | 0.02 | No CPF | Dropped[d] |
| 1, 1, 2, 2-Tetrachloroethane | No | 6.80E-06 | <0.001[c] | 12032 | 0.02 | Dropped[d] | Dropped[d] |
| 1, 1, 2-Trichloro-1, 2, 2-trifluoroethane | No | 1.06E-05 | <0.001[c] | 12032 | 0.2 | No CPF | Dropped[d] |
| 1, 1, 2-Trichloroethane | No | 6.80E-06 | <0.001[c] | 12032 | 0.02 | Dropped[d] | Dropped[d] |

**Table B-2. Estimated Maximum Value for Incremental Lifetime Cancer Risk and Hazard Quotient per Nonradionuclides for the Average Inventory. (10 sheets)**

| Analyte | Detected | Inventory (kg) | WMA C Fenceline Concentration (µg/L) | Peak Year | $K_d$ (mL/g)[a] | Incremental Lifetime Cancer Risk Scenarios (Groundwater)[b] | Hazard Quotient Scenarios (Groundwater)[b] |
|---|---|---|---|---|---|---|---|
| | | | | | | WAC-173-340 Method B | WAC-173-340 Method B |
| 1, 1-Dichloroethene | No | 1.08E-05 | <0.001[c] | 12032 | 0.02 | No CPF | Dropped[d] |
| 1, 2, 4-Trichlorobenzene | No | 1.06E-05 | 0 | DNA | 0.6 | No CPF | 0 |
| 1, 2-Dichloroethane | No | 6.70E-06 | <0.001[c] | 12032 | 0.02 | Dropped[d] | Dropped[d] |
| 1, 4-Dichlorobenzene | No | 7.85E-02 | <0.001[c] | 12032 | 0.2 | Dropped[d] | Dropped[d] |
| 2, 4, 5-Trichlorophenol | No | 3.99E-02 | <0.001[c] | 12032 | 0.2 | No CPF | Dropped[d] |
| 2, 4, 6-Trichlorophenol | No | 4.23E-02 | <0.001[c] | 12032 | 0.1 | Dropped[d] | Dropped[d] |
| 2, 4-Dinitrotoluene | No | 5.50E-02 | <0.001[c] | 12032 | 0.1 | No CPF | Dropped[d] |
| 2, 6-Bis (tert-butyl)-4-methylphenol | No | 5.40E-02 | 0 | DNA | 5 | No CPF | No RfD |
| 2-Chlorophenol | No | 7.75E-02 | <0.001[c] | 10481 | 0 | No CPF | Dropped[d] |
| 2-Ethoxyethanol | No | 4.23E-02 | <0.001[c] | 10481 | 0 | No CPF | Dropped[d] |
| 2-Methylphenol (o-cresol) | No | 1.50E-01 | <0.001[c] | 12032 | 0.1 | No CPF | Dropped[d] |
| 2-Nitropropane | No | 1.65E-05 | <0.001[c] | 10481 | 0 | No CPF | No RfD |
| 4-Methylphenol (p-cresol) | No | 3.41E-01 | <0.001[c] | 12032 | 0.1 | No CPF | Dropped[d] |
| Acenaphthene | No | 8.80E-02 | 0 | DNA | 1 | No CPF | 0 |

**Table B-2. Estimated Maximum Value for Incremental Lifetime Cancer Risk and Hazard Quotient per Nonradionuclides for the Average Inventory. (10 sheets)**

| Analyte | Detected | Inventory (kg) | WMA C Fenceline Concentration (µg/L) | Peak Year | $K_d$ (mL/g)[a] | Incremental Lifetime Cancer Risk Scenarios (Groundwater)[b] | Hazard Quotient Scenarios (Groundwater)[b] |
|---|---|---|---|---|---|---|---|
| | | | | | | WAC-173-340 Method B | WAC-173-340 Method B |
| Acetate C2H3O2- | No | 5.25E+00 | 2.16E-02 | 10481 | 0 | No CPF | No RfD |
| Benzene | No | 6.60E-06 | <0.001[c] | 12032 | 0.02 | Dropped[d] | Dropped[d] |
| Butylbenzylphthalate | No | 9.30E-02 | 0 | DNA | 5 | No CPF | 0 |
| Carbon disulfide | No | 9.65E-06 | <0.001[c] | 12032 | 0.02 | No CPF | Dropped[d] |
| Carbon tetrachloride | No | 1.24E-05 | <0.001[c] | 12032 | 0.02 | Dropped[d] | Dropped[d] |
| Chlorobenzene | No | 8.10E-06 | <0.001[c] | 12032 | 0.1 | No CPF | Dropped[d] |
| Chloroethene(vinyl chloride) | No | 4.70E-06 | <0.001[c] | 10481 | 0 | Dropped[d] | Dropped[d] |
| Chloroform | No | 9.85E-06 | <0.001[c] | 12032 | 0.02 | Dropped[d] | Dropped[d] |
| Cresylic acid (cresol, mixed isomers) | No | 2.12E-01 | <0.001[c] | 12032 | 0.1 | No CPF | No RfD |
| Cyclohexanone | No | 1.28E-01 | <0.001[c] | 10481 | 0 | No CPF | Dropped[d] |
| Dichloromethane (methylene chloride) | No | 8.00E-06 | <0.001[c] | 10481 | 0 | Dropped[d] | Dropped[d] |
| Diethyl ether | No | 9.15E-06 | <0.001[c] | 10481 | 0 | No CPF | Dropped[d] |
| Di-n-butylphthalate | No | 1.17E-01 | 0 | DNA | 2 | No CPF | 0 |
| Di-n-octylphthalate | No | 8.70E-02 | 0 | DNA | 5 | No CPF | 0 |

**Table B-2. Estimated Maximum Value for Incremental Lifetime Cancer Risk and Hazard Quotient per Nonradionuclides for the Average Inventory. (10 sheets)**

| Analyte | Detected | Inventory (kg) | WMA C Fenceline Concentration (µg/L) | Peak Year | $K_d$ (mL/g)[a] | Incremental Lifetime Cancer Risk Scenarios (Groundwater)[b] | Hazard Quotient Scenarios (Groundwater)[b] |
|---|---|---|---|---|---|---|---|
| | | | | | | WAC-173-340 Method B | WAC-173-340 Method B |
| Ethyl Acetate | No | 1.01E-05 | <0.001[c] | 10481 | 0 | No CPF | Dropped[d] |
| Ethylbenzene | No | 1.62E-05 | <0.001[c] | 12032 | 0.02 | No CPF | Dropped[d] |
| Fluoranthene | No | 5.30E-02 | 0 | DNA | 5 | No CPF | 0 |
| Hexachlorobutadiene | No | 1.95E-02 | 0 | DNA | 5 | 0 | 0 |
| Hexachloroethane | No | 3.70E-02 | 0 | DNA | 5 | 0 | 0 |
| Isobutanol | No | 1.05E-01 | <0.001[c] | 10481 | 0 | No CPF | Dropped[d] |
| m-Cresol (3-Methylphenol) | No | 3.41E-01 | <0.001[c] | 12032 | 0.1 | No CPF | Dropped[d] |
| m-Xylene | No | 1.85E-05 | <0.001[c] | 12032 | 0.02 | No CPF | Dropped[d] |
| Naphthalene | No | 3.52E-02 | 0 | DNA | 0.6 | No CPF | 0 |
| n-Butyl alcohol (1-butanol) | No | 7.85E-02 | <0.001[c] | 10481 | 0 | No CPF | Dropped[d] |
| Nitrobenzene | No | 3.76E-02 | <0.001[c] | 12032 | 0.02 | No CPF | Dropped[d] |
| N-nitroso-di-n-propylamine | No | 5.05E-02 | <0.001[c] | 10481 | 0 | Dropped[d] | No RfD |
| n-Nitrosomorpholine | No | 4.47E-02 | <0.001[c] | 10481 | 0 | No CPF | No RfD |
| o-Dichlorobenzene | No | 7.85E-02 | <0.001[c] | 12032 | 0.1 | No CPF | Dropped[d] |
| o-Nitrophenol | No | 9.05E-02 | <0.001[c] | 12032 | 0.1 | No CPF | No RfD |

**Table B-2. Estimated Maximum Value for Incremental Lifetime Cancer Risk and Hazard Quotient per Nonradionuclides for the Average Inventory. (10 sheets)**

| Analyte | Detected | Inventory (kg) | WMA C Fenceline Concentration (µg/L) | Peak Year | $K_d$ (mL/g)[a] | Incremental Lifetime Cancer Risk Scenarios (Groundwater)[b] | Hazard Quotient Scenarios (Groundwater)[b] |
|---|---|---|---|---|---|---|---|
| | | | | | | WAC-173-340 Method B | WAC-173-340 Method B |
| o-Xylene | No | 5.75E-06 | <0.001[c] | 12032 | 0.1 | No CPF | Dropped[d] |
| p-Chloro-m-cresol (4-Chloro-3-methylphenol) | No | 2.82E-02 | <0.001[c] | 12032 | 0.2 | No CPF | No RfD |
| Pentachlorophenol | No | 3.87E-02 | <0.001[c] | 12032 | 0.2 | Dropped[d] | Dropped[d] |
| Phenol | No | 1.77E-01 | <0.001[c] | 10481 | 0 | No CPF | Dropped[d] |
| p-Xylene | No | 1.85E-05 | <0.001[c] | 12032 | 0.2 | No CPF | Dropped[d] |
| Pyrene | No | 8.55E-02 | 0 | DNA | 5 | No CPF | 0 |
| Pyridine | No | 5.30E-02 | <0.001[c] | 10481 | 0 | No CPF | Dropped[d] |
| Tetrachloroethylene | No | 8.55E-06 | <0.001[c] | 12032 | 0.1 | Dropped[d] | Dropped[d] |
| Toluene | No | 7.65E-06 | <0.001[c] | 12032 | 0.02 | No CPF | Dropped[d] |
| Trichlorofluoromethane | No | 9.75E-06 | <0.001[c] | 12032 | 0.02 | No CPF | Dropped[d] |
| Xylenes | No | 2.45E-05 | <0.001[c] | 12032 | 0.02 | No CPF | Dropped[d] |
| Aroclor-1016 | No | 1.06E-04 | 0 | DNA | 5 | 0 | 0 |
| Aroclor-1221 | No | 3.41E-05 | 0 | DNA | 2 | 0 | No RfD |
| Aroclor-1232 | No | 6.00E-04 | 0 | DNA | 2 | 0 | No RfD |

**Table B-2. Estimated Maximum Value for Incremental Lifetime Cancer Risk and Hazard Quotient per Nonradionuclides for the Average Inventory. (10 sheets)**

| Analyte | Detected | Inventory (kg) | WMA C Fenceline Concentration (µg/L) | Peak Year | $K_d$ (mL/g)[a] | Incremental Lifetime Cancer Risk Scenarios (Groundwater)[b] | Hazard Quotient Scenarios (Groundwater)[b] |
|---|---|---|---|---|---|---|---|
| | | | | | | WAC-173-340 Method B | WAC-173-340 Method B |
| Aroclor-1242 | No | 1.08E-04 | 0 | DNA | 5 | 0 | No RfD |
| Aroclor-1248 | No | 3.41E-05 | 0 | DNA | 5 | 0 | No RfD |
| Aroclor-1260 | No | 1.46E-04 | 0 | DNA | 5 | 0 | No RfD |
| Performance objective[e] | | | | | | 1.0E-06[f] | 1.0[g] |

[a] See PNNL-13895, *Hanford Contaminant Distribution Coefficient Database and Users Guide*, Rev. 1, for the basis for the $K_d$ values listed for chromium and nitrate. The $K_d$ values listed for the organic chemical compounds are determined from the chemicals' organic carbon/water partitioning coefficient and an estimate of 0.03% for the Hanford Site sediments fraction of organic content (PNNL-13895, Rev. 1, page 11, paragraph 3).
[b] All exposure scenarios are described in HNF-SD-WM-TI-707.
[c] Simulation predicted contaminant arrives at the fenceline, but at a concentration (0.001 µg/L) that is much below the minimum detection limit for standard analytical methods.
[d] Dropped from the analysis because the simulation predicted concentration (0.001 µg/L) is much below the minimum detection limit for standard analytical methods.
[e] Single Analyte Performance objectives apply to entire WMA, not just a single component of the WMA.
[f] *Washington Administrative Code* (WAC) 173-340-705 (2)(c)(ii), "Dangerous Waste Regulations."
[g] WAC 173-340-705 (2)(c)(i).

Notes:
No CPF = no cancer potency factor available.
No RfD = no reference dose available
DNA = did not arrive at fenceline within the modeling period
Gray shaded cells are nondetects and the inventory used in the risk assessment is calculated at one-half the minimum detection limit.

**Table B-3. Cumulative Incremental Lifetime Cancer Risk, Hazard Index, and Radiological Drinking Water Dose from Peak Groundwater Concentration Related to the Pre-Retrieval Inventory in Single-Shell Tank C-201.**

| Metric[a] | Industrial Receptor | Residential Receptor | Performance Objective[b] |
|---|---|---|---|
| | Pre-Retrieval Inventory | Pre-Retrieval Inventory | |
| Radioactive chemicals ILCR (unitless) | 2.57E-9[c] (2.57E-9)[c,d] | 6.20E-08[c] (6.20E-08)[c,d] | 1.0E-06 to 1.0E-4[e] |
| Nonradioactive chemicals ILCR (unitless) | | Dropped[f] | 1.0E-5[g] |
| Hazard Index (unitless) | | 3.85E-03[c] (3.85E-3)[c,d] | 1.0[g] |

| Dose | Pre-Retrieval Inventory | Dose |
|---|---|---|
| APF (mrem/yr) | 3.49E-04[c] (3.49E-04)[c,d] | 25 mrem/yr[h] |
| EPA maximum contaminant level (MCL) beta/photon emitters (mrem/yr target organ dose) | 8.28E-04[c] (8.28E-04)[c,d] | 4 mrem/yr[i] |
| **Groundwater Concentration** | **Pre-Retrieval Inventory** | **MCL** |
| $^{99}$Tc (pCi/L) | 1.84E-1 | 900 pCi/L |
| $^{14}$C (pCi/L) | 5.89E-3 | 2000 pCi/L |
| $^{129}$I (pCi/L) (not detected) | <0.001 | 1 pCi/L |
| Chromium (µg/L) | 0.135 | 100 µg/L |
| Fluoride (µg/L) | 4.31E-02 | 4,000 µg/L |
| Nitrate (µg/L)[k] | 1.34 | 45,000 µg/L |
| Nitrite (µg/L)[k] | 0.472 | 3,000 µg/L |
| Uranium (µg/L) | 0.0 | 30 µg/L |

[a] Metric ILCR-rad were evaluated using industrial and residential land use scenarios described in HNF-SD-WM-TI-707. ILCR-nonrad and Hazard Index were evaluated using WAC 173-340-705 (4) Method B (residential).

[b] Performance objectives apply to entire WMA, not just a single component of the WMA.

[c] Analytes with a fenceline concentration of less than either 0.001 pCi/L (radioactive) or 0.001 µg/L (nonradioactive), which is a value that is well below the minimum detection limit for standard analytical methods, are not included in the total.

[d] Total in parenthesis includes nondetects with inventory calculated at one-half the detection limit.

[e] EPA/540/R-99/006, *Radiation Risk Assessment at CERCLA Sites: Q & A, Directive 9200.4-31P.*

[f] Dropped from the analyses because no analyte with a cancer slope factor was predicted to have a concentration >0.001 µg/L which is a value that is well below the minimum detection limit for standard analytical methods.

[g] WAC 173-340-705 (4).

[h] DOE O 435.1, *Radioactive Waste Management.*

[i] 66 FR 76708, "National Primary Drinking Water Regulations; Radionuclides; Final Rule."

[j] Model estimated concentration >0.001 pCi/L which is a value that is well below the minimum detection limit for standard analytical methods

[k] MCL is for nitrate and nitrite, not nitrogen in nitrate or nitrogen in nitrite which are 10,000 and 1,000, respectively

**Table B-4. Intruder Dose Summary for Single-Shell Tank C-201.**

| Years after Closure | Inventory | Inadvertent Intruder Scenario | | | |
|---|---|---|---|---|---|
| | | SST PA Reference Case | | SST PA Sensitivity Cases | |
| | | Well Driller (mrem) | Rural Pasture (mrem/yr) | Suburban Garden (mrem/yr) | Commercial Farm (mrem/yr) |
| 100 | Pre-retrieval | 44 | 45 | 720 | 0.34 |
| 500 | Pre-retrieval | 36 | 10 | 220 | 0.28 |

Notes:
Site closure is assumed to occur on January 1, 2032.
The performance objective for the well driller is 500 mrem. The performance objective for the other scenarios is 100 mrem/yr
In the SST performance assessment, the assumed depth of the waste material was 1-in. For the nominal case, the depth of the waste material was 0.73-in., while for the 95 % UCL the depth of the waste material was 4.40 in.

**Table B-5. Comparison of IITWOS Predicted Inventory Used in DOE/ORP-2005-01 and the Nominal Post-Retrieval Inventory.**

| | Analyte | Pre-Retrieval Inventory | Nominal Post-Retrieval[a] Inventory | 95% UCL Post-Retrieval[a] Inventory | Ratio Pre-Retrieval/ Nominal | Ratio Pre-Retrieval/ UCL 95% |
|---|---|---|---|---|---|---|
| Groundwater | Carbon-14 | 3.82E-03 | 7.76E-04 | 1.39E-03 | 4.93 | 2.75 |
| | Technetium-99 | 4.60E-02 | 2.66E-03 | 4.79E-03 | 17.27 | 9.60 |
| | Chromium | 3.28E+01 | 1.23E+01 | 2.54E+01 | 2.66 | 1.29 |
| | Fluoride | 1.05E+01 | 2.73E+00 | 5.00E+00 | 3.86 | 2.11 |
| | Nitrate | 3.26E+02 | 1.37E+00 | 2.10E+00 | 238.06 | 155.45 |
| | Nitrite | 1.15E+02 | 5.34E-01 | 8.88E-01 | 215.24 | 129.54 |
| Inadvertent Intruder | Strontium-90 + D | 4.08E+02 | 2.44E+02 | 3.36E+02 | 1.67 | 1.21 |
| | Cesium-137 + D | 4.76E+01 | 9.84E+00 | 1.30E+01 | 4.84 | 3.65 |
| | Uranium-233 | 6.37E-05 | 1.41E-05 | 2.19E-05 | 4.53 | 2.91 |
| | Uranium-234 | 2.06E-01 | 4.54E-02 | 7.07E-02 | 4.53 | 2.91 |
| | Uranium-235 + D | 8.70E-03 | 1.92E-03 | 2.99E-03 | 4.53 | 2.91 |
| | Uranium-236 | 4.92E-03 | 1.09E-03 | 1.69E-03 | 4.53 | 2.91 |
| | Uranium-238 + D | 2.06E-01 | 4.55E-02 | 7.08E-02 | 4.53 | 2.91 |
| | Neptunium-237 + D | 5.33E-03 | 3.48E-03 | 5.15E-03 | 1.53 | 1.04 |
| | Plutonium-238 | 2.79E+00 | 6.97E-01 | 2.10E+00 | 4.01 | 1.33 |
| | Plutonium-239 | 3.39E+01 | 1.60E+01 | 2.77E+01 | 2.12 | 1.22 |
| | Plutonium-240 | 7.32E+00 | 3.45E+00 | 5.98E+00 | 2.12 | 1.22 |
| | Plutonium-241 + D | 3.54E+01 | 1.67E+01 | 2.89E+01 | 2.12 | 1.22 |
| | Americium-241 | 5.38E+00 | 2.50E+00 | 4.19E+00 | 2.15 | 1.28 |
| | Curium-242 | 1.94E-01 | 9.03E-02 | 1.51E-01 | 2.15 | 1.28 |
| | Curium-243 | 9.47E-03 | 4.41E-03 | 7.37E-03 | 2.15 | 1.28 |
| | Curium-244 | 2.08E-01 | 9.69E-02 | 1.62E-01 | 2.15 | 1.28 |

[a] Inventories for contaminants having the greatest impact for groundwater or inadvertent intruder pathway.

N/A: Not applicable because the inventory was calculated from the laboratory's minimum detection limit for that analyte.

# APPENDIX C

# IMPACTS ASSOCIATED WITH THE POST-RETRIEVAL INVENTORY

**Table C-1. Estimated Maximum Incremental Lifetime Cancer Risk/Radiological Dose During the Modeling Period for Radionuclides for the Average Inventory. (3 sheets)**

| Analyte | Detect | Inventory (Ci) | WMA C Fenceline Conc. (pCi/L) | Peak Year | $K_d$ (mL/g)[a] | Half-Life (yr) | Incremental Lifetime Cancer Risk Scenarios (Groundwater)[b] | | Radiological Dose Groundwater (mrem/yr)[b] | Radiological Dose Beta/Photon (mrem/yr)[b] |
|---|---|---|---|---|---|---|---|---|---|---|
| | | | | | | | Industrial | Residential | All Pathway Farmer | Drinking Water |
| $^{14}C$ | Yes | 7.76E-04 | 1.20E-03 | 9781 | 0 | 5.73E+03 | 9.28E-12 | 6.71E-11 | 5.79E-06 | 2.39E-06 |
| $^{63}Ni$ | Yes | 9.31E-01 | 0 | DNA | 5 | 1.00E+02 | 0 | 0 | 0 | 0 |
| $^{90}Sr$ | Yes | 2.44E+02 | 0 | DNA | 5 | 2.81E+01 | 0 | 0 | 0 | 0 |
| $^{99}Tc$ | Yes | 2.66E-03 | 1.06E-02 | 10461 | 0 | 2.11E+05 | 1.46E-10 | 3.56E-09 | 1.86E-05 | 4.72E-05 |
| $^{137}Cs$ | Yes | 9.84E+00 | 0 | DNA | 5 | 3.00E+01 | 0 | 0 | 0 | 0 |
| $^{228}Th$ | Yes | 7.26E-06 | 0 | DNA | 2 | 1.91E+00 | 0 | 0 | 0 | N/A |
| $^{232}Th$ | Yes | 4.09E-06 | 0 | DNA | 2 | 1.41E+10 | 0 | 0 | 0 | N/A |
| $^{233}U$ | Yes | 1.41E-05 | 0 | DNA | 0.6 | 1.59E+05 | 0 | 0 | 0 | N/A |
| $^{234}U$ | Yes | 4.54E-02 | 0 | DNA | 0.6 | 2.46E+05 | 0 | 0 | 0 | N/A |
| $^{235}U$ | Yes | 1.92E-03 | 0 | DNA | 0.6 | 7.04E+08 | 0 | 0 | 0 | N/A |
| $^{236}U$ | Yes | 1.09E-03 | 0 | DNA | 0.6 | 2.34E+07 | 0 | 0 | 0 | N/A |
| $^{238}U$ | Yes | 4.55E-02 | 0 | DNA | 0.6 | 4.47E+09 | 0 | 0 | 0 | N/A |
| $^{237}Np$ | Yes | 3.48E-03 | 0 | DNA | 2 | 2.14E+06 | 0 | 0 | 0 | N/A |

**Table C-1. Estimated Maximum Incremental Lifetime Cancer Risk/Radiological Dose During the Modeling Period for Radionuclides for the Average Inventory. (3 sheets)**

| Analyte | Detect | Inventory (Ci) | WMA C Fenceline Conc. (pCi/L) | Peak Year | $K_d$ (mL/g)[a] | Half-Life (yr) | Incremental Lifetime Cancer Risk Scenarios (Groundwater)[b] | | Radiological Dose Groundwater (mrem/yr)[b] | Radiological Dose Beta/Photon (mrem/yr)[b] |
|---|---|---|---|---|---|---|---|---|---|---|
| | | | | | | | Industrial | Residential | All Pathway Farmer | Drinking Water |
| $^{239}Pu$ | Yes | 1.60E+01 | 0 | DNA | 2 | 2.41E+04 | 0 | 0 | 0 | N/A |
| $^{240}Pu$ | Yes | 3.45E+00 | 0 | DNA | 2 | 6.56E+03 | 0 | 0 | 0 | N/A |
| $^{241}Pu$ | Yes | 1.67E+01 | 0 | DNA | 2 | 1.44E+01 | 0 | 0 | 0 | 0 |
| $^{241}Am$ | Yes | 2.50E+00 | 0 | DNA | 2 | 4.33E+02 | 0 | 0 | 0 | N/A |
| $^{242}Cm$ | Yes | 9.03E-02 | 0 | DNA | 2 | 4.46E-01 | 0 | 0 | 0 | N/A |
| $^{243}Cm$ | Yes | 4.41E-03 | 0 | DNA | 2 | 2.85E+01 | 0 | 0 | 0 | N/A |
| $^{244}Cm$ | Yes | 9.69E-02 | 0 | DNA | 2 | 1.81E+01 | 0 | 0 | 0 | N/A |
| $^{3}H$ | No | 3.44E-03 | 0 | DNA | 0 | 1.23E+01 | 0 | 0 | 0 | 0 |
| $^{60}Co$ | No | 1.28E-01 | 0 | DNA | 0.1 | 5.27E+00 | 0 | 0 | 0 | 0 |
| $^{79}Se$ | No | 4.65E-04 | 0 | DNA | 2 | 8.05E+05 | 0 | 0 | 0 | N/A |
| $^{125}Sb$ | No | 3.41E-01 | 0 | DNA | 1 | 2.73E+00 | 0 | 0 | 0 | 0 |
| $^{129}I$ | No | 1.44E-04 | <0.001[c] | 12032 | 0.2 | 1.57E+07 | Dropped[d] | Dropped[d] | Dropped[d] | Dropped[d] |
| $^{152}Eu$ | No | 5.55E-01 | 0 | DNA | 1 | 1.33E+01 | 0 | 0 | 0 | 0 |

**Table C-1. Estimated Maximum Incremental Lifetime Cancer Risk/Radiological Dose During the Modeling Period for Radionuclides for the Average Inventory. (3 sheets)**

| Analyte | Detect | Inventory (Ci) | WMA C Fenceline Conc. (pCi/L) | Peak Year | $K_d$ (mL/g)[a] | Half-Life (yr) | Incremental Lifetime Cancer Risk Scenarios (Groundwater)[b] | | Radiological Dose Groundwater (mrem/yr)[b] | Radiological Dose Beta/Photon (mrem/yr)[b] |
|---|---|---|---|---|---|---|---|---|---|---|
| | | | | | | | Industrial | Residential | All Pathway Farmer | Drinking Water |
| $^{154}Eu$ | No | 3.90E-01 | 0 | DNA | 1 | 8.59E+00 | 0 | 0 | 0 | 0 |
| $^{155}Eu$ | No | 2.14E-01 | 0 | DNA | 1 | 4.68E+00 | 0 | 0 | 0 | 0 |
| $^{230}Th$ | No | 3.72E-02 | 0 | DNA | 2 | 7.54E+04 | 0 | 0 | 0 | N/A |
| $^{238}Pu$ | No | 3.48E-01 | 0 | DNA | 2 | 8.77E+01 | 0 | 0 | 0 | N/A |
| Performance objective[e] | | | | | | | 1-0E-6 to 1.0E-4[f] | 1-0E-6 to 1.0E-4[f] | 25[g] | 4[h] |

[a] See PNNL-13895, *Hanford Contaminant Distribution Coefficient Database and Users Guide*, Rev. 1, for the basis for the $K_d$ values listed for the radionuclides.
[b] All exposure scenarios are described in HNF-SD-WM-TI-707.
[c] Simulation predicted contaminant arrives at the fenceline, but at a concentration (0.001 pCi/L) that is much below the minimum detection limit for standard analytical methods.
[d] Dropped from the analysis because the simulation predicted concentration (0.001 pCi/L) is much below the minimum detection limit for standard analytical methods.
[e] Performance objectives apply to the cumulative (i.e., all contaminants) for the entire WMA.
[f] EPA/540/R-99/006, *Radiation Risk Assessment at CERCLA Sites: Q & A, Directive* 9200.4-31P.
[g] DOE O 435.1, *Radioactive Waste Management.*
[h] 66 FR 76708, "National Primary Drinking Water Regulations; Radionuclides; Final Rule."

Notes:
DNA = did not arrive at fenceline within the modeling period
N/A = radionuclide is not a beta/photon emitter.
Shaded cells are nondetects and the inventory used in the risk assessment is calculated at one-half the minimum detection limit.

**Table C-2. Estimated Maximum Value for Incremental Lifetime Cancer Risk and Hazard Quotient per Nonradionuclides for the Average Inventory. (10 sheets)**

| Analyte | Detected | Inventory (kg) | WMA C Fenceline Concentration (µg/L) | Peak Year | $K_d$ (mL/g)[a] | Incremental Lifetime Cancer Risk Scenarios (Groundwater)[b] | Hazard Quotient Scenarios (Groundwater)[b] |
|---|---|---|---|---|---|---|---|
| | | | | | | WAC-173-340 Method B | WAC-173-340 Method B |
| Aurninum | Yes | 4.17E+00 | 0 | DNA | 1 | No CPF | 0 |
| Ammonium NH4 | Yes | 3.52E-02 | <0.001[c] | 10481 | 0 | No CPF | No RfD |
| Barium | Yes | 1.60E-01 | 0 | DNA | 5 | No CPF | 0 |
| Bismuth | Yes | 6.19E-01 | 2.54E-03 | 10481 | 0 | No CPF | No RfD |
| Cadmium | Yes | 9.29E-03 | 0 | DNA | 1 | No CPF | 0 |
| Calcium | Yes | 6.86E+00 | 0 | DNA | 5 | No CPF | No RfD |
| Chloride | Yes | 2.98E-01 | 1.22E-03 | 10481 | 0 | No CPF | No RfD |
| Chromium | Yes | 1.23E+01 | 5.05E-02 | 10481 | 0 | No CPF | 1.30E-03 |
| Cobalt | Yes | 8.56E-02 | <0.001[c] | 12032 | 0.1 | No CPF | Dropped[d] |
| Copper | Yes | 6.13E-01 | 0 | DNA | 5 | No CPF | 0 |
| Cyanide | Yes | 2.08E-03 | 0 | DNA | 5 | No CPF | 0 |
| Europium | Yes | 6.23E-02 | 0 | DNA | 5 | No CPF | No RfD |
| Fluoride | Yes | 2.73E+00 | 1.12E-02 | 10481 | 0 | No CPF | 1.17E-05 |
| Iron | Yes | 1.12E+02 | 0 | DNA | 5 | No CPF | 0 |
| Lead | Yes | 6.34E+00 | 0 | DNA | 5 | No CPF | No RfD |

**Table C-2. Estimated Maximum Value for Incremental Lifetime Cancer Risk and Hazard Quotient per Nonradionuclides for the Average Inventory. (10 sheets)**

| Analyte | Detected | Inventory (kg) | WMA C Fenceline Concentration (µg/L) | Peak Year | $K_d$ (mL/g)[a] | Incremental Lifetime Cancer Risk Scenarios (Groundwater)[b] | Hazard Quotient Scenarios (Groundwater)[b] |
|---|---|---|---|---|---|---|---|
| | | | | | | WAC-173-340 Method B | WAC-173-340 Method B |
| Magnesium | Yes | 8.45E-01 | 0 | DNA | 5 | No CPF | No RfD |
| Manganese | Yes | 1.93E+01 | 0 | DNA | 1 | No CPF | 0 |
| Mercury | Yes | 1.08E-01 | 0 | DNA | 5 | No CPF | No RfD |
| Nickel | Yes | 6.24E+00 | 0 | DNA | 5 | No CPF | 0 |
| Nitrate | Yes | 1.37E+00 | 5.62E-03 | 10481 | 0 | No CPF | 2.20E-07 |
| Nitrite | Yes | 5.34E-01 | 2.19E-03 | 10481 | 0 | No CPF | 1.37E-06 |
| Oxalate | Yes | 5.17E+01 | 2.12E-01 | 10481 | 0 | No CPF | No RfD |
| Palladium | Yes | 1.48E+00 | 0 | DNA | 5 | No CPF | No RfD |
| Phosphate | Yes | 5.54E+01 | 2.27E-01 | 10481 | 0 | No CPF | No RfD |
| Phosphorus | Yes | 1.81E+01 | 0 | DNA | 5 | No CPF | 0 |
| Praseodymium | Yes | 2.96E-01 | 1.22E-03 | 10481 | 0 | No CPF | No RfD |
| Ruthenium | Yes | 1.28E-01 | 0 | DNA | 1 | No CPF | No RfD |
| Silicon | Yes | 7.09E+00 | 0 | DNA | 5 | No CPF | No RfD |
| Sodium | Yes | 4.98E+01 | 2.04E-01 | 10481 | 0 | No CPF | No RfD |
| Strontium | Yes | 9.23E-01 | 0 | DNA | 5 | No CPF | 0 |

**Table C-2. Estimated Maximum Value for Incremental Lifetime Cancer Risk and Hazard Quotient per Nonradionuclides for the Average Inventory. (10 sheets)**

| Analyte | Detected | Inventory (kg) | WMA C Fenceline Concentration (µg/L) | Peak Year | $K_d$ (mL/g)[a] | Incremental Lifetime Cancer Risk Scenarios (Groundwater)[b] | Hazard Quotient Scenarios (Groundwater)[b] |
|---|---|---|---|---|---|---|---|
| | | | | | | WAC-173-340 Method B | WAC-173-340 Method B |
| Sulfate | Yes | 3.71E+00 | 1.52E-02 | 10481 | 0 | No CPF | No RfD |
| Sulfur | Yes | 1.24E+00 | 5.09E-03 | 10481 | 0 | No CPF | No RfD |
| Thorium | Yes | 4.08E-02 | 0 | DNA | 1 | No CPF | No RfD |
| Tin | Yes | 1.32E-01 | 0 | DNA | 5 | No CPF | 0 |
| Titanium | Yes | 1.45E-02 | 0 | DNA | 5 | No CPF | No RfD |
| Tungsten | Yes | 1.00E+00 | 4.11E-03 | 10481 | 0 | No CPF | No RfD |
| Uranium | Yes | 1.36E+02 | 0 | DNA | 0.6 | No CPF | 0 |
| Zinc | Yes | 4.23E-01 | 0 | DNA | 5 | No CPF | 0 |
| Zirconium | Yes | 1.03E-02 | 0 | DNA | 5 | No CPF | No RfD |
| 2-Butanone(MEK) | Yes | 3.99E-06 | <0.001[c] | 10481 | 0 | No CPF | Dropped[d] |
| 2-Propanone (Acetone) | Yes | 1.44E-05 | <0.001[c] | 10481 | 0 | No CPF | Dropped[d] |
| 4-Methyl-2-pentanone (MIBK) | Yes | 2.30E-06 | <0.001[c] | 12032 | 0.02 | No CPF | Dropped[d] |
| Tributyl phosphate | Yes | 2.02E+01 | 0 | DNA | 0.6 | 0 | 0 |
| Aroclor-1254 | Yes | 9.15E-05 | 0 | DNA | 5 | 0 | 0 |
| Antimony | No | 4.52E-02 | 0 | DNA | 1 | No CPF | 0 |

**Table C-2. Estimated Maximum Value for Incremental Lifetime Cancer Risk and Hazard Quotient per Nonradionuclides for the Average Inventory. (10 sheets)**

| Analyte | Detected | Inventory (kg) | WMA C Fenceline Concentration (µg/L) | Peak Year | $K_d$ (mL/g)[a] | Incremental Lifetime Cancer Risk Scenarios (Groundwater)[b] | Hazard Quotient Scenarios (Groundwater)[b] |
|---|---|---|---|---|---|---|---|
| | | | | | | WAC-173-340 Method B | WAC-173-340 Method B |
| Arsenic | No | 5.70E-02 | 0 | DNA | 5 | 0 | 0 |
| Beryllium | No | 7.25E-03 | 0 | DNA | 5 | No CPF | 0 |
| Boron | No | 2.34E-02 | 0 | DNA | 2 | No CPF | 0 |
| Bromide | No | 1.34E+00 | 5.52E-03 | 10481 | 0 | No CPF | No RfD |
| Cerium | No | 6.35E-02 | <0.001[c] | 10481 | 0 | No CPF | No RfD |
| Formate+A2 | No | 1.06E+00 | 4.37E-03 | 10481 | 0 | No CPF | No RfD |
| Lanthanum | No | 6.15E-03 | <0.001[c] | 10481 | 0 | No CPF | No RfD |
| Lithium | No | 7.25E-03 | 0 | DNA | 5 | No CPF | 0 |
| Molybdenum | No | 9.05E-03 | 0 | DNA | 5 | No CPF | 0 |
| Neodymium | No | 3.62E-02 | <0.001[c] | 10481 | 0 | No CPF | No RfD |
| Niobium | No | 5.60E-02 | 0 | DNA | 5 | No CPF | No RfD |
| Potassium | No | 4.52E-01 | 1.86E-03 | 10481 | 0 | No CPF | No RfD |
| Rhodium | No | 2.07E-01 | <0.001[c] | 10481 | 0 | No CPF | No RfD |
| Rubidium | No | 3.11E+00 | 1.28E-02 | 10481 | 0 | No CPF | No RfD |
| Samarium | No | 1.81E-02 | 0 | DNA | 1 | No CPF | No RfD |

**Table C-2. Estimated Maximum Value for Incremental Lifetime Cancer Risk and Hazard Quotient per Nonradionuclides for the Average Inventory. (10 sheets)**

| Analyte | Detected | Inventory (kg) | WMA C Fenceline Concentration (µg/L) | Peak Year | $K_d$ (mL/g)[a] | Incremental Lifetime Cancer Risk Scenarios (Groundwater)[b] | Hazard Quotient Scenarios (Groundwater)[b] |
|---|---|---|---|---|---|---|---|
| | | | | | | WAC-173-340 Method B | WAC-173-340 Method B |
| Selenium | No | 5.80E-02 | 0 | DNA | 5 | No CPF | 0 |
| Silver | No | 6.20E-03 | 0 | DNA | 2 | No CPF | 0 |
| Sulfide | No | 5.15E-03 | <0.001[c] | 10481 | 0 | No CPF | No RfD |
| Tantalum | No | 5.70E-02 | <0.001[c] | 10481 | 0 | No CPF | No RfD |
| Tellurium | No | 7.25E-02 | <0.001[c] | 10481 | 0 | No CPF | No RfD |
| Thallium | No | 1.68E-01 | 0 | DNA | 5 | No CPF | 0 |
| Vanadium | No | 5.80E-03 | 0 | DNA | 5 | No CPF | 0 |
| Yttrium | No | 4.52E-03 | <0.001[c] | 10481 | 0 | No CPF | No RfD |
| 1, 1, 1-Trichloroethane | No | 4.10E-06 | <0.001[c] | 12032 | 0.02 | No CPF | Dropped[d] |
| 1, 1, 2, 2-Tetrachloroethane | No | 2.98E-06 | <0.001[c] | 12032 | 0.02 | Dropped[d] | Dropped[d] |
| 1, 1, 2-Trichloro-1, 2, 2-trifluoroethane | No | 4.63E-06 | <0.001[c] | 12032 | 0.2 | No CPF | Dropped[d] |
| 1, 1, 2-Trichloroethane | No | 2.98E-06 | <0.001[c] | 12032 | 0.02 | Dropped[d] | Dropped[d] |
| 1, 1, 2-Trichloroethylene | No | 5.70E-06 | <0.001[c] | 12032 | 0.02 | Dropped[d] | Dropped[d] |
| 1, 1-Dichloroethene | No | 4.72E-06 | <0.001[c] | 12032 | 0.02 | No CPF | Dropped[d] |

**Table C-2. Estimated Maximum Value for Incremental Lifetime Cancer Risk and Hazard Quotient per Nonradionuclides for the Average Inventory. (10 sheets)**

| Analyte | Detected | Inventory (kg) | WMA C Fenceline Concentration (µg/L) | Peak Year | $K_d$ (mL/g)[a] | Incremental Lifetime Cancer Risk Scenarios (Groundwater)[b] | Hazard Quotient Scenarios (Groundwater)[b] |
|---|---|---|---|---|---|---|---|
| | | | | | | WAC-173-340 Method B | WAC-173-340 Method B |
| 1, 2, 4-Trichlorobenzene | No | 4.68E-06 | 0 | DNA | 0.6 | No CPF | 0 |
| 1, 2-Dichloroethane | No | 2.93E-06 | <0.001[c] | 12032 | 0.02 | Dropped[d] | Dropped[d] |
| 1, 4-Dichlorobenzene | No | 1.39E-01 | <0.001[c] | 12032 | 0.2 | Dropped[d] | Dropped[d] |
| 2, 4, 5-Trichlorophenol | No | 1.29E-01 | <0.001[c] | 12032 | 0.2 | No CPF | Dropped[d] |
| 2, 4, 6-Trichlorophenol | No | 1.32E-01 | <0.001[c] | 12032 | 0.1 | Dropped[d] | Dropped[d] |
| 2, 4-Dinitrotoluene | No | 1.49E-01 | <0.001[c] | 12032 | 0.1 | No CPF | Dropped[d] |
| 2, 6-Bis (tert-butyl)-4-methylphenol | No | 3.96E-01 | 0 | DNA | 5 | No CPF | No RfD |
| 2-Chlorophenol | No | 1.37E-01 | <0.001[c] | 10481 | 0 | No CPF | Dropped[d] |
| 2-Ethoxyethanol | No | 3.08E-01 | 1.27E-03 | 10481 | 0 | No CPF | 1.98E-07 |
| 2-Methylphenol (o-cresol) | No | 1.41E-01 | <0.001[c] | 12032 | 0.1 | No CPF | Dropped[d] |
| 2-Nitropropane | No | 7.15E-06 | <0.001[c] | 10481 | 0 | No CPF | No RfD |
| 4-Methylphenol (p-cresol) | No | 1.37E-01 | <0.001[c] | 12032 | 0.1 | No CPF | Dropped[d] |
| Acenaphthene | No | 1.43E-01 | 0 | DNA | 1 | No CPF | 0 |
| Acetate C2H3O2- | No | 1.06E+00 | 4.37E-03 | 10481 | 0 | No CPF | No RfD |

**Table C-2. Estimated Maximum Value for Incremental Lifetime Cancer Risk and Hazard Quotient per Nonradionuclides for the Average Inventory. (10 sheets)**

| Analyte | Detected | Inventory (kg) | WMA C Fenceline Concentration (µg/L) | Peak Year | $K_d$ (mL/g)[a] | Incremental Lifetime Cancer Risk Scenarios (Groundwater)[b] | Hazard Quotient Scenarios (Groundwater)[b] |
|---|---|---|---|---|---|---|---|
| | | | | | | WAC-173-340 Method B | WAC-173-340 Method B |
| Benzene | No | 2.87E-06 | <0.001[c] | 12032 | 0.02 | Dropped[d] | Dropped[d] |
| Butylbenzylphthalate | No | 2.86E-01 | 0 | DNA | 5 | No CPF | 0 |
| Carbon disulfide | No | 4.25E-06 | <0.001[c] | 12032 | 0.02 | No CPF | Dropped[d] |
| Carbon tetrachloride | No | 5.25E-06 | <0.001[c] | 12032 | 0.02 | Dropped[d] | Dropped[d] |
| Chlorobenzene | No | 3.54E-06 | <0.001[c] | 12032 | 0.1 | No CPF | Dropped[d] |
| Chloroethene(vinyl chloride) | No | 2.03E-06 | <0.001[c] | 10481 | 0 | Dropped[d] | Dropped[d] |
| Chloroform | No | 4.34E-06 | <0.001[c] | 12032 | 0.02 | Dropped[d] | Dropped[d] |
| Cresylic acid (cresol, mixed isomers) | No | 2.70E-01 | <0.001[c] | 12032 | 0.1 | No CPF | No RfD |
| Cyclohexanone | No | 9.30E-01 | 3.82E-03 | 10481 | 0 | No CPF | 4.77E-08 |
| Dichloromethane (methylene chloride) | No | 3.50E-06 | <0.001[c] | 10481 | 0 | Dropped[d] | Dropped[d] |
| Diethyl ether | No | 4.06E-06 | <0.001[c] | 10481 | 0 | No CPF | Dropped[d] |
| Di-n-butylphthalate | No | 9.30E-01 | 0 | DNA | 2 | No CPF | 0 |
| Di-n-octylphthalate | No | 1.66E-01 | 0 | DNA | 5 | No CPF | 0 |
| Ethyl Acetate | No | 4.44E-06 | <0.001[c] | 10481 | 0 | No CPF | Dropped[d] |

**Table C-2. Estimated Maximum Value for Incremental Lifetime Cancer Risk and Hazard Quotient per Nonradionuclides for the Average Inventory. (10 sheets)**

| Analyte | Detected | Inventory (kg) | WMA C Fenceline Concentration (µg/L) | Peak Year | $K_d$ (mL/g)[a] | Incremental Lifetime Cancer Risk Scenarios (Groundwater)[b] | Hazard Quotient Scenarios (Groundwater)[b] |
|---|---|---|---|---|---|---|---|
| | | | | | | WAC-173-340 Method B | WAC-173-340 Method B |
| Ethylbenzene | No | 7.15E-06 | <0.001[c] | 12032 | 0.02 | No CPF | Dropped[d] |
| Fluoranthene | No | 1.48E-01 | 0 | DNA | 5 | No CPF | 0 |
| Hexachlorobutadiene | No | 1.49E-01 | 0 | DNA | 5 | 0 | 0 |
| Hexachloroethane | No | 7.50E-03 | 0 | DNA | 5 | 0 | 0 |
| Isobutanol | No | 7.55E-01 | 3.10E-03 | 10481 | 0 | No CPF | 6.46E-07 |
| m-Cresol (3-Methylphenol) | No | 1.37E-01 | <0.001[c] | 12032 | 0.1 | No CPF | Dropped[d] |
| m-Xylene | No | 8.10E-06 | <0.001[c] | 12032 | 0.02 | No CPF | Dropped[d] |
| Naphthalene | No | 1.41E-01 | 0 | DNA | 0.6 | No CPF | 0 |
| n-Butyl alcohol (1-butanol) | No | 5.75E-01 | 2.36E-03 | 10481 | 0 | No CPF | 1.48E-06 |
| Nitrobenzene | No | 1.49E-01 | <0.001[c] | 12032 | 0.02 | No CPF | Dropped[d] |
| N-nitroso-di-n-propylamine | No | 1.32E-01 | <0.001[c] | 10481 | 0 | Dropped[d] | No RfD |
| n-Nitrosomorpholine | No | 3.11E-01 | 1.28E-03 | 10481 | 0 | No CPF | No RfD |
| o-Dichlorobenzene | No | 2.23E-01 | <0.001[c] | 12032 | 0.1 | No CPF | Dropped[d] |
| o-Nitrophenol | No | 1.26E-01 | <0.001[c] | 12032 | 0.1 | No CPF | No RfD |
| o-Xylene | No | 2.53E-06 | <0.001[c] | 12032 | 0.1 | No CPF | Dropped[d] |

**Table C-2. Estimated Maximum Value for Incremental Lifetime Cancer Risk and Hazard Quotient per Nonradionuclides for the Average Inventory. (10 sheets)**

| Analyte | Detected | Inventory (kg) | WMA C Fenceline Concentration (µg/L) | Peak Year | $K_d$ (mL/g)[a] | Incremental Lifetime Cancer Risk Scenarios (Groundwater)[b] | Hazard Quotient Scenarios (Groundwater)[b] |
|---|---|---|---|---|---|---|---|
| | | | | | | WAC-173-340 Method B | WAC-173-340 Method B |
| p-Chloro-m-cresol (4-Chloro-3-methylphenol) | No | 1.40E-01 | <0.001[c] | 12032 | 0.2 | No CPF | No RfD |
| Pentachlorophenol | No | 1.11E-01 | <0.001[c] | 12032 | 0.2 | Dropped[d] | Dropped[d] |
| Phenol | No | 1.37E-01 | <0.001[c] | 10481 | 0 | No CPF | Dropped[d] |
| p-Xylene | No | 8.10E-06 | <0.001[c] | 12032 | 0.2 | No CPF | Dropped[d] |
| Pyrene | No | 1.41E-01 | 0 | DNA | 5 | No CPF | 0 |
| Pyridine | No | 1.31E-01 | <0.001[c] | 10481 | 0 | No CPF | Dropped[d] |
| Tetrachloroethylene | No | 3.75E-06 | <0.001[c] | 12032 | 0.1 | Dropped[d] | Dropped[d] |
| Toluene | No | 3.35E-06 | <0.001[c] | 12032 | 0.02 | No CPF | Dropped[d] |
| Trichlorofluoromethane | No | 4.27E-06 | <0.001[c] | 12032 | 0.02 | No CPF | Dropped[d] |
| Xylenes | No | 1.05E-05 | <0.001[c] | 12032 | 0.02 | No CPF | Dropped[d] |
| Aroclor-1016 | No | 9.85E-05 | 0 | DNA | 5 | 0 | 0 |
| Aroclor-1221 | No | 3.08E-05 | 0 | DNA | 2 | 0 | No RfD |
| Aroclor-1232 | No | 5.55E-04 | 0 | DNA | 2 | 0 | No RfD |
| Aroclor-1242 | No | 9.85E-05 | 0 | DNA | 5 | 0 | No RfD |

**Table C-2. Estimated Maximum Value for Incremental Lifetime Cancer Risk and Hazard Quotient per Nonradionuclides for the Average Inventory. (10 sheets)**

| Analyte | Detected | Inventory (kg) | WMA C Fenceline Concentration (µg/L) | Peak Year | $K_d$ (mL/g)[a] | Incremental Lifetime Cancer Risk Scenarios (Groundwater)[b] | Hazard Quotient Scenarios (Groundwater)[b] |
|---|---|---|---|---|---|---|---|
| | | | | | | WAC-173-340 Method B | WAC-173-340 Method B |
| Aroclor-1248 | No | 3.19E-05 | 0 | DNA | 5 | 0 | No RfD |
| Aroclor-1260 | No | 1.36E-04 | 0 | DNA | 5 | 0 | No RfD |
| Polychlorinated Biphenyls | No | 3.46E-05 | 0 | DNA | 5 | 0 | No RfD |
| Performance objective[e] | | | | | | 1.0E-06[f] | 1.0[g] |

[a] See PNNL-13895, *Hanford Contaminant Distribution Coefficient Database and Users Guide*, Rev. 1, for the basis for the $K_d$ values listed for chromium and nitrate. The $K_d$ values listed for the organic chemical compounds are determined from the chemicals' organic carbon/water partitioning coefficient and an estimate of 0.03% for the Hanford Site sediments fraction of organic content (PNNL-13895, Rev. 1, page 11, paragraph 3).
[b] All exposure scenarios are described in HNF-SD-WM-TI-707.
[c] Simulation predicted contaminant arrives at the fenceline, but at a concentration (0.001 µg/L) that is much below the minimum detection limit for standard analytical methods.
[d] Dropped from the analysis because the simulation predicted concentration (0.001 µg/L) is much below the minimum detection limit for standard analytical methods.
[e] Single Analyte Performance objectives apply to entire WMA, not just a single component of the WMA.
[f] *Washington Administrative Code* (WAC) 173-340-705 (2)(c)(ii), "Dangerous Waste Regulations."
[g] WAC 173-340-705 (2)(c)(i).

Notes:
No CPF = no cancer potency factor available.
No RfD = no reference dose available
DNA = did not arrive at fenceline within the modeling period
Gray shaded cells are nondetects and the inventory used in the risk assessment is calculated at one-half the minimum detection limit.

**Table C-3. Estimated Maximum Incremental Lifetime Cancer Risk/Radiological Dose During the Modeling Period for Radionuclides for the UCL 95% Inventory. (3 sheets)**

| Analyte | Detect | Inventory (Ci) | WMA C Fenceline Conc. (pCi/L) | Peak Year | $K_d$ (mL/g)[a] | Half-Life (yr) | Incremental Lifetime Cancer Risk Scenarios (Groundwater)[b] | | Radiological Dose Groundwater (mrem/yr)[b] | Radiological Dose Beta/Photon (mrem/yr)[b] |
|---|---|---|---|---|---|---|---|---|---|---|
| | | | | | | | Industrial | Residential | All Pathways Farmer | Drinking Water |
| $^{14}C$ | Yes | 1.39E-03 | 2.14E-03 | 9781 | 0 | 5.73E+03 | 1.66E-11 | 1.20E-10 | 1.04E-05 | 4.28E-06 |
| $^{63}Ni$ | Yes | 1.41E+00 | 0 | DNA | 5 | 1.00E+02 | 0 | 0 | 0 | 0 |
| $^{90}Sr$ | Yes | 3.36E+02 | 0 | DNA | 5 | 2.81E+01 | 0 | 0 | 0 | 0 |
| $^{99}Tc$ | Yes | 4.79E-03 | 1.91E-02 | 10461 | 0 | 2.11E+05 | 2.64E-10 | 6.42E-09 | 3.35E-05 | 8.5E-05 |
| $^{137}Cs$ | Yes | 1.30E+01 | 0 | DNA | 5 | 3.00E+01 | 0 | 0 | 0 | 0 |
| $^{228}Th$ | Yes | 1.28E-05 | 0 | DNA | 2 | 1.91E+00 | 0 | 0 | 0 | N/A |
| $^{232}Th$ | Yes | 7.85E-06 | 0 | DNA | 2 | 1.41E+10 | 0 | 0 | 0 | N/A |
| $^{233}U$ | Yes | 2.19E-05 | 0 | DNA | 0.6 | 1.59E+05 | 0 | 0 | 0 | N/A |
| $^{234}U$ | Yes | 7.07E-02 | 0 | DNA | 0.6 | 2.46E+05 | 0 | 0 | 0 | N/A |
| $^{235}U$ | Yes | 2.99E-03 | 0 | DNA | 0.6 | 7.04E+08 | 0 | 0 | 0 | N/A |
| $^{236}U$ | Yes | 1.69E-03 | 0 | DNA | 0.6 | 2.34E+07 | 0 | 0 | 0 | N/A |
| $^{238}U$ | Yes | 7.08E-02 | 0 | DNA | 0.6 | 4.47E+09 | 0 | 0 | 0 | N/A |

**Table C-3. Estimated Maximum Incremental Lifetime Cancer Risk/Radiological Dose During the Modeling Period for Radionuclides for the UCL 95% Inventory. (3 sheets)**

| Analyte | Detect | Inventory (Ci) | WMA C Fenceline Conc. (pCi/L) | Peak Year | $K_d$ (mL/g)[a] | Half-Life (yr) | Incremental Lifetime Cancer Risk Scenarios (Groundwater)[b] | | Radiological Dose Groundwater (mrem/yr)[b] | Radiological Dose Beta/Photon (mrem/yr)[b] |
|---|---|---|---|---|---|---|---|---|---|---|
| | | | | | | | Industrial | Residential | All Pathways Farmer | Drinking Water |
| $^{237}Np$ | Yes | 5.15E-03 | 0 | DNA | 2 | 2.14E+06 | 0 | 0 | 0 | N/A |
| $^{239}Pu$ | Yes | 2.77E+01 | 0 | DNA | 2 | 2.41E+04 | 0 | 0 | 0 | N/A |
| $^{240}Pu$ | Yes | 5.98E+00 | 0 | DNA | 2 | 6.56E+03 | 0 | 0 | 0 | N/A |
| $^{241}Pu$ | Yes | 2.89E+01 | 0 | DNA | 2 | 1.44E+01 | 0 | 0 | 0 | 0 |
| $^{241}Am$ | Yes | 4.19E+00 | 0 | DNA | 2 | 4.33E+02 | 0 | 0 | 0 | N/A |
| $^{242}Cm$ | Yes | 1.51E-01 | 0 | DNA | 2 | 4.46E-01 | 0 | 0 | 0 | N/A |
| $^{243}Cm$ | Yes | 7.37E-03 | 0 | DNA | 2 | 2.85E+01 | 0 | 0 | 0 | N/A |
| $^{244}Cm$ | Yes | 1.62E-01 | 0 | DNA | 2 | 1.81E+01 | 0 | 0 | 0 | N/A |
| $^{3}H$ | No | 1.04E-02 | 0 | DNA | 0 | 1.23E+01 | 0 | 0 | 0 | 0 |
| $^{60}Co$ | No | 3.85E-01 | 0 | DNA | 0.1 | 5.27E+00 | 0 | 0 | 0 | 0 |
| $^{79}Se$ | No | 1.40E-03 | 0 | DNA | 2 | 8.05E+05 | 0 | 0 | 0 | N/A |
| $^{125}Sb$ | No | 1.03E+00 | 0 | DNA | 1 | 2.73E+00 | 0 | 0 | 0 | 0 |
| $^{129}I$ | No | 4.36E-04 | <0.001[c] | 12032 | 0.2 | 1.57E+07 | Dropped[d] | Dropped[d] | Dropped[d] | Dropped[d] |

**Table C-3. Estimated Maximum Incremental Lifetime Cancer Risk/Radiological Dose During the Modeling Period for Radionuclides for the UCL 95% Inventory. (3 sheets)**

| Analyte | Detect | Inventory (Ci) | WMA C Fenceline Conc. (pCi/L) | Peak Year | $K_d$ (mL/g)[a] | Half-Life (yr) | Incremental Lifetime Cancer Risk Scenarios (Groundwater)[b] | | Radiological Dose Groundwater (mrem/yr)[b] | Radiological Dose Beta/Photon (mrem/yr)[b] |
|---|---|---|---|---|---|---|---|---|---|---|
| | | | | | | | Industrial | Residential | All Pathways Farmer | Drinking Water |
| $^{152}$Eu | No | 1.67E+00 | 0 | DNA | 1 | 1.33E+01 | 0 | 0 | 0 | 0 |
| $^{154}$Eu | No | 1.18E+00 | 0 | DNA | 1 | 8.59E+00 | 0 | 0 | 0 | 0 |
| $^{155}$Eu | No | 6.46E-01 | 0 | DNA | 1 | 4.68E+00 | 0 | 0 | 0 | 0 |
| $^{230}$Th | No | 1.12E-01 | 0 | DNA | 2 | 7.54E+04 | 0 | 0 | 0 | N/A |
| $^{238}$Pu | No | 1.05E+00 | 0 | DNA | 2 | 8.77E+01 | 0 | 0 | 0 | N/A |
| Performance objective[e] | | | | | | | 1-0E-6 to 1.0E-4[f] | 1-0E-6 to 1.0E-4[f] | 25[g] | 4[h] |

[a] See PNNL-13895, *Hanford Contaminant Distribution Coefficient Database and Users Guide*, Rev. 1, for the basis for the $K_d$ values listed for the radionuclides.
[b] All exposure scenarios are described in HNF-SD-WM-TI-707.
[c] Simulation predicted contaminant arrives at the fenceline, but at a concentration (0.001 pCi/L) that is much below the minimum detection limit for standard analytical methods.
[d] Dropped from the analysis because the simulation predicted concentration (0.001 pCi/L) is much below the minimum detection limit for standard analytical methods.
[e] Performance objectives apply to the cumulative (i.e., all contaminants) for the entire WMA.
[f] EPA/540/R-99/006, *Radiation Risk Assessment at CERCLA Sites: Q & A, Directive* 9200.4-31P.
[g] DOE O 435.1, *Radioactive Waste Management*.
[h] 66 FR 76708, "National Primary Drinking Water Regulations; Radionuclides; Final Rule."

Notes:
DNA = did not arrive at fenceline within the modeling period
N/A = radionuclide is not a beta/photon emitter.
Shaded cells are nondetects and the inventory used in the risk assessment is calculated at one-half the minimum detection limit.

**Table C-4. Estimated Maximum Value for Incremental Lifetime Cancer Risk and Hazard Quotient per Nonradionuclides for the Upper Confidence Level 95% Inventory. (10 sheets)**

| Analyte | Detected | Inventory (kg) | WMA C Fenceline Concentration (µg/L) | Peak Year | $K_d$ (mL/g)[a] | Incremental Lifetime Cancer Risk Scenarios (Groundwater)[b] | Hazard Quotient Scenarios (Groundwater)[b] |
|---|---|---|---|---|---|---|---|
| | | | | | | WAC-173-340 Method B | WAC-173-340 Method B |
| Aluminum | Yes | 5.44E+00 | 0 | DNA | 1 | No CPF | 0 |
| Ammonium NH4 | Yes | 7.39E-02 | <0.001[c] | 10481 | 0 | No CPF | No RfD |
| Barium | Yes | 2.56E-01 | 0 | DNA | 5 | No CPF | 0 |
| Bismuth | Yes | 1.09E+00 | 4.46E-03 | 10481 | 0 | No CPF | No RfD |
| Cadmium | Yes | 2.27E-02 | 0 | DNA | 1 | No CPF | 0 |
| Calcium | Yes | 1.02E+01 | 0 | DNA | 5 | No CPF | No RfD |
| Chloride | Yes | 6.19E-01 | 2.54E-03 | 10481 | 0 | No CPF | No RfD |
| Chromium | Yes | 2.54E+01 | 1.04E-01 | 10481 | 0 | No CPF | 2.68E-03 |
| Cobalt | Yes | 1.25E-01 | <0.001[c] | 12032 | 0.1 | No CPF | Dropped[d] |
| Copper | Yes | 8.68E-01 | 0 | DNA | 5 | No CPF | 0 |
| Cyanide | Yes | 3.33E-03 | 0 | DNA | 5 | No CPF | 0 |
| Europium | Yes | 8.15E-02 | 0 | DNA | 5 | No CPF | No RfD |
| Fluoride | Yes | 5.00E+00 | 2.05E-02 | 10481 | 0 | No CPF | 2.14E-05 |
| Iron | Yes | 2.02E+02 | 0 | DNA | 5 | No CPF | 0 |
| Lead | Yes | 8.86E+00 | 0 | DNA | 5 | No CPF | No RfD |

**Table C-4. Estimated Maximum Value for Incremental Lifetime Cancer Risk and Hazard Quotient per Nonradionuclides for the Upper Confidence Level 95% Inventory. (10 sheets)**

| Analyte | Detected | Inventory (kg) | WMA C Fenceline Concentration (µg/L) | Peak Year | $K_d$ (mL/g)[a] | Incremental Lifetime Cancer Risk Scenarios (Groundwater)[b] | Hazard Quotient Scenarios (Groundwater)[b] |
|---|---|---|---|---|---|---|---|
| | | | | | | WAC-173-340 Method B | WAC-173-340 Method B |
| Magnesium | Yes | 1.61E+00 | 0 | DNA | 5 | No CPF | No RfD |
| Manganese | Yes | 3.96E+01 | 0 | DNA | 1 | No CPF | 0 |
| Mercury | Yes | 1.51E-01 | 0 | DNA | 5 | No CPF | No RfD |
| Nickel | Yes | 1.29E+01 | 0 | DNA | 5 | No CPF | 0 |
| Nitrate | Yes | 2.10E+00 | 8.61E-03 | 10481 | 0 | No CPF | 3.36E-07 |
| Nitrite | Yes | 8.88E-01 | 3.65E-03 | 10481 | 0 | No CPF | 2.28E-06 |
| Oxalate | Yes | 1.14E+02 | 4.69E-01 | 10481 | 0 | No CPF | No RfD |
| Palladium | Yes | 1.85E+00 | 0 | DNA | 5 | No CPF | No RfD |
| Phosphate | Yes | 8.29E+01 | 3.40E-01 | 10481 | 0 | No CPF | No RfD |
| Phosphorus | Yes | 2.70E+01 | 0 | DNA | 5 | No CPF | 0 |
| Praseodymium | Yes | 7.46E-01 | 3.06E-03 | 10481 | 0 | No CPF | No RfD |
| Ruthenium | Yes | 1.71E-01 | 0 | DNA | 1 | No CPF | No RfD |
| Silicon | Yes | 1.15E+01 | 0 | DNA | 5 | No CPF | No RfD |
| Sodium | Yes | 6.98E+01 | 2.87E-01 | 10481 | 0 | No CPF | No RfD |
| Strontium | Yes | 1.70E+00 | 0 | DNA | 5 | No CPF | 0 |

**Table C-4. Estimated Maximum Value for Incremental Lifetime Cancer Risk and Hazard Quotient per Nonradionuclides for the Upper Confidence Level 95% Inventory. (10 sheets)**

| Analyte | Detected | Inventory (kg) | WMA C Fenceline Concentration (µg/L) | Peak Year | $K_d$ (mL/g)[a] | Incremental Lifetime Cancer Risk Scenarios (Groundwater)[b] | Hazard Quotient Scenarios (Groundwater)[b] |
|---|---|---|---|---|---|---|---|
| | | | | | | WAC-173-340 Method B | WAC-173-340 Method B |
| Sulfate | Yes | 5.40E+00 | 2.22E-02 | 10481 | 0 | No CPF | No RfD |
| Sulfur | Yes | 1.80E+00 | 7.40E-03 | 10481 | 0 | No CPF | No RfD |
| Thorium | Yes | 8.22E-02 | 0 | DNA | 1 | No CPF | No RfD |
| Tin | Yes | 1.65E-01 | 0 | DNA | 5 | No CPF | 0 |
| Titanium | Yes | 5.19E-02 | 0 | DNA | 5 | No CPF | No RfD |
| Tungsten | Yes | 1.26E+00 | 5.16E-03 | 10481 | 0 | No CPF | No RfD |
| Uranium | Yes | 2.12E+02 | 0 | DNA | 0.6 | No CPF | 0 |
| Zinc | Yes | 6.07E-01 | 0 | DNA | 5 | No CPF | 0 |
| Zirconium | Yes | 2.22E-02 | 0 | DNA | 5 | No CPF | No RfD |
| 2-Butanone(MEK) | Yes | 1.01E-05 | <0.001[c] | 10481 | 0 | No CPF | Dropped[d] |
| 2-Propanone (Acetone) | Yes | 3.64E-05 | <0.001[c] | 10481 | 0 | No CPF | Dropped[d] |
| 4-Methyl-2-pentanone (MIBK) | Yes | 5.51E-06 | <0.001[c] | 12032 | 0.02 | No CPF | Dropped[d] |
| Tributyl phosphate | Yes | 4.53E+01 | 0 | DNA | 0.6 | 0 | 0 |
| Aroclor-1254 | Yes | 1.43E-04 | 0 | DNA | 5 | 0 | 0 |
| Antimony | No | 1.36E-01 | 0 | DNA | 1 | No CPF | 0 |

**Table C-4. Estimated Maximum Value for Incremental Lifetime Cancer Risk and Hazard Quotient per Nonradionuclides for the Upper Confidence Level 95% Inventory. (10 sheets)**

| Analyte | Detected | Inventory (kg) | WMA C Fenceline Concentration (µg/L) | Peak Year | $K_d$ (mL/g)[a] | Incremental Lifetime Cancer Risk Scenarios (Groundwater)[b] | Hazard Quotient Scenarios (Groundwater)[b] |
|---|---|---|---|---|---|---|---|
| | | | | | | WAC-173-340 Method B | WAC-173-340 Method B |
| Arsenic | No | 1.72E-01 | 0 | DNA | 5 | 0 | 0 |
| Beryllium | No | 2.18E-02 | 0 | DNA | 5 | No CPF | 0 |
| Boron | No | 7.06E-02 | 0 | DNA | 2 | No CPF | 0 |
| Bromide | No | 4.06E+00 | 1.67E-02 | 10481 | 0 | No CPF | No RfD |
| Cerium | No | 1.91E-01 | <0.001[c] | 10481 | 0 | No CPF | No RfD |
| Formate+A2 | No | 3.22E+00 | 1.32E-02 | 10481 | 0 | No CPF | No RfD |
| Lanthanum | No | 1.85E-02 | <0.001[c] | 10481 | 0 | No CPF | No RfD |
| Lithium | No | 2.18E-02 | 0 | DNA | 5 | No CPF | 0 |
| Molybdenum | No | 2.72E-02 | 0 | DNA | 5 | No CPF | 0 |
| Neodymium | No | 1.09E-01 | <0.001[c] | 10481 | 0 | No CPF | No RfD |
| Niobium | No | 1.68E-01 | 0 | DNA | 5 | No CPF | No RfD |
| Potassium | No | 1.36E+00 | 5.59E-03 | 10481 | 0 | No CPF | No RfD |
| Rhodium | No | 6.25E-01 | 2.57E-03 | 10481 | 0 | No CPF | No RfD |
| Rubidium | No | 9.37E+00 | 3.85E-02 | 10481 | 0 | No CPF | No RfD |
| Samarium | No | 5.45E-02 | 0 | DNA | 1 | No CPF | No RfD |

**Table C-4. Estimated Maximum Value for Incremental Lifetime Cancer Risk and Hazard Quotient per Nonradionuclides for the Upper Confidence Level 95% Inventory. (10 sheets)**

| Analyte | Detected | Inventory (kg) | WMA C Fenceline Concentration (µg/L) | Peak Year | $K_d$ (mL/g)[a] | Incremental Lifetime Cancer Risk Scenarios (Groundwater)[b] | Hazard Quotient Scenarios (Groundwater)[b] |
|---|---|---|---|---|---|---|---|
| | | | | | | WAC-173-340 Method B | WAC-173-340 Method B |
| Selenium | No | 1.75E-01 | 0 | DNA | 5 | No CPF | 0 |
| Silver | No | 1.87E-02 | 0 | DNA | 2 | No CPF | 0 |
| Sulfide | No | 1.55E-02 | <0.001[c] | 10481 | 0 | No CPF | No RfD |
| Tantalum | No | 1.72E-01 | <0.001[c] | 10481 | 0 | No CPF | No RfD |
| Tellurium | No | 2.18E-01 | <0.001[c] | 10481 | 0 | No CPF | No RfD |
| Thallium | No | 5.05E-01 | 0 | DNA | 5 | No CPF | 0 |
| Vanadium | No | 1.75E-02 | 0 | DNA | 5 | No CPF | 0 |
| Yttrium | No | 1.36E-02 | <0.001[c] | 10481 | 0 | No CPF | No RfD |
| 1, 1, 1-Trichloroethane | No | 1.24E-05 | <0.001[c] | 12032 | 0.02 | No CPF | Dropped[d] |
| 1, 1, 2, 2-Tetrachloroethane | No | 8.98E-06 | <0.001[c] | 12032 | 0.02 | Dropped[d] | Dropped[d] |
| 1, 1, 2-Trichloro-1, 2, 2-trifluoroethane | No | 1.40E-05 | <0.001[c] | 12032 | 0.2 | No CPF | Dropped[d] |
| 1, 1, 2-Trichloroethane | No | 8.98E-06 | <0.001[c] | 12032 | 0.02 | Dropped[d] | Dropped[d] |
| 1, 1, 2-Trichloroethylene | No | 1.73E-05 | <0.001[c] | 12032 | 0.02 | Dropped[d] | Dropped[d] |
| 1, 1-Dichloroethene | No | 1.42E-05 | <0.001[c] | 12032 | 0.02 | No CPF | Dropped[d] |

**Table C-4. Estimated Maximum Value for Incremental Lifetime Cancer Risk and Hazard Quotient per Nonradionuclides for the Upper Confidence Level 95% Inventory. (10 sheets)**

| Analyte | Detected | Inventory (kg) | WMA C Fenceline Concentration (µg/L) | Peak Year | $K_d$ (mL/g)[a] | Incremental Lifetime Cancer Risk Scenarios (Groundwater)[b] | Hazard Quotient Scenarios (Groundwater)[b] |
|---|---|---|---|---|---|---|---|
| | | | | | | WAC-173-340 Method B | WAC-173-340 Method B |
| 1, 2, 4-Trichlorobenzene | No | 1.41E-05 | 0 | DNA | 0.6 | No CPF | 0 |
| 1, 2-Dichloroethane | No | 8.84E-06 | <0.001[c] | 12032 | 0.02 | Dropped[d] | Dropped[d] |
| 1, 4-Dichlorobenzene | No | 4.17E-01 | <0.001[c] | 12032 | 0.2 | Dropped[d] | Dropped[d] |
| 2, 4, 5-Trichlorophenol | No | 3.88E-01 | <0.001[c] | 12032 | 0.2 | No CPF | Dropped[d] |
| 2, 4, 6-Trichlorophenol | No | 3.98E-01 | <0.001[c] | 12032 | 0.1 | Dropped[d] | Dropped[d] |
| 2, 4-Dinitrotoluene | No | 4.50E-01 | <0.001[c] | 12032 | 0.1 | No CPF | Dropped[d] |
| 2, 6-Bis (tert-butyl)-4-methylphenol | No | 1.19E+00 | 0 | DNA | 5 | No CPF | No RfD |
| 2-Chlorophenol | No | 4.12E-01 | 1.69E-03 | 10481 | 0 | No CPF | 2.11E-05 |
| 2-Ethoxyethanol | No | 9.30E-01 | 3.82E-03 | 10481 | 0 | No CPF | 5.96E-07 |
| 2-Methylphenol (o-cresol) | No | 4.26E-01 | <0.001[c] | 12032 | 0.1 | No CPF | Dropped[d] |
| 2-Nitropropane | No | 2.16E-05 | <0.001[c] | 10481 | 0 | No CPF | No RfD |
| 4-Methylphenol (p-cresol) | No | 4.12E-01 | <0.001[c] | 12032 | 0.1 | No CPF | Dropped[d] |
| Acenaphthene | No | 4.31E-01 | 0 | DNA | 1 | No CPF | 0 |
| Acetate C2H3O2- | No | 3.22E+00 | 1.32E-02 | 10481 | 0 | No CPF | No RfD |
| Benzene | No | 8.65E-06 | <0.001[c] | 12032 | 0.02 | Dropped[d] | Dropped[d] |

**Table C-4. Estimated Maximum Value for Incremental Lifetime Cancer Risk and Hazard Quotient per Nonradionuclides for the Upper Confidence Level 95% Inventory. (10 sheets)**

| Analyte | Detected | Inventory (kg) | WMA C Fenceline Concentration (µg/L) | Peak Year | $K_d$ (mL/g)[a] | Incremental Lifetime Cancer Risk Scenarios (Groundwater)[b] | Hazard Quotient Scenarios (Groundwater)[b] |
|---|---|---|---|---|---|---|---|
| | | | | | | WAC-173-340 Method B | WAC-173-340 Method B |
| Butylbenzylphthalate | No | 8.63E-01 | 0 | DNA | 5 | No CPF | 0 |
| Carbon disulfide | No | 1.28E-05 | <0.001[c] | 12032 | 0.02 | No CPF | Dropped[d] |
| Carbon tetrachloride | No | 1.58E-05 | <0.001[c] | 12032 | 0.02 | Dropped[d] | Dropped[d] |
| Chlorobenzene | No | 1.07E-05 | <0.001[c] | 12032 | 0.1 | No CPF | Dropped[d] |
| Chloroethene(vinyl chloride) | No | 6.11E-06 | <0.001[c] | 10481 | 0 | Dropped[d] | Dropped[d] |
| Chloroform | No | 1.31E-05 | <0.001[c] | 12032 | 0.02 | Dropped[d] | Dropped[d] |
| Cresylic acid (cresol, mixed isomers) | No | 8.15E-01 | <0.001[c] | 12032 | 0.1 | No CPF | No RfD |
| Cyclohexanone | No | 2.80E+00 | 1.15E-02 | 10481 | 0 | No CPF | 1.44E-07 |
| Dichloromethane (methylene chloride) | No | 1.06E-05 | <0.001[c] | 10481 | 0 | Dropped[d] | Dropped[d] |
| Diethyl ether | No | 1.22E-05 | <0.001[c] | 10481 | 0 | No CPF | Dropped[d] |
| Di-n-butylphthalate | No | 2.81E+00 | 0 | DNA | 2 | No CPF | 0 |
| Di-n-octylphthalate | No | 4.98E-01 | 0 | DNA | 5 | No CPF | 0 |
| Ethyl Acetate | No | 1.34E-05 | <0.001[c] | 10481 | 0 | No CPF | Dropped[d] |
| Ethylbenzene | No | 2.16E-05 | <0.001[c] | 12032 | 0.02 | No CPF | Dropped[d] |

**Table C-4. Estimated Maximum Value for Incremental Lifetime Cancer Risk and Hazard Quotient per Nonradionuclides for the Upper Confidence Level 95% Inventory. (10 sheets)**

| Analyte | Detected | Inventory (kg) | WMA C Fenceline Concentration (µg/L) | Peak Year | $K_d$ (mL/g)[a] | Incremental Lifetime Cancer Risk Scenarios (Groundwater)[b] | Hazard Quotient Scenarios (Groundwater)[b] |
|---|---|---|---|---|---|---|---|
| | | | | | | WAC-173-340 Method B | WAC-173-340 Method B |
| Fluoranthene | No | 4.46E-01 | 0 | DNA | 5 | No CPF | 0 |
| Hexachlorobutadiene | No | 4.50E-01 | 0 | DNA | 5 | 0 | 0 |
| Hexachloroethane | No | 2.26E-02 | 0 | DNA | 5 | 0 | 0 |
| Isobutanol | No | 2.28E+00 | 9.36E-03 | 10481 | 0 | No CPF | 1.95E-06 |
| m-Cresol (3-Methylphenol) | No | 4.12E-01 | <0.001[c] | 12032 | 0.1 | No CPF | Dropped[d] |
| m-Xylene | No | 2.44E-05 | <0.001[c] | 12032 | 0.02 | No CPF | Dropped[d] |
| Naphthalene | No | 4.26E-01 | 0 | DNA | 0.6 | No CPF | 0 |
| n-Butyl alcohol (1-butanol) | No | 1.73E+00 | 7.12E-03 | 10481 | 0 | No CPF | 4.45E-06 |
| Nitrobenzene | No | 4.50E-01 | 1.47E-03 | 12032 | 0.02 | No CPF | 1.84E-04 |
| N-nitroso-di-n-propylamine | No | 3.98E-01 | 1.63E-03 | 10481 | 0 | Dropped[d] | No RfD |
| n-Nitrosomorpholine | No | 9.39E-01 | 3.86E-03 | 10481 | 0 | No CPF | No RfD |
| o-Dichlorobenzene | No | 6.71E-01 | <0.001[c] | 12032 | 0.1 | No CPF | Dropped[d] |
| o-Nitrophenol | No | 3.79E-01 | <0.001[c] | 12032 | 0.1 | No CPF | No RfD |
| o-Xylene | No | 7.64E-06 | <0.001[c] | 12032 | 0.1 | No CPF | Dropped[d] |

**Table C-4. Estimated Maximum Value for Incremental Lifetime Cancer Risk and Hazard Quotient per Nonradionuclides for the Upper Confidence Level 95% Inventory. (10 sheets)**

| Analyte | Detected | Inventory (kg) | WMA C Fenceline Concentration (µg/L) | Peak Year | $K_d$ (mL/g)[a] | Incremental Lifetime Cancer Risk Scenarios (Groundwater)[b] | Hazard Quotient Scenarios (Groundwater)[b] |
|---|---|---|---|---|---|---|---|
| | | | | | | WAC-173-340 Method B | WAC-173-340 Method B |
| p-Chloro-m-cresol (4-Chloro-3-methylphenol) | No | 4.22E-01 | <0.001[c] | 12032 | 0.2 | No CPF | No RfD |
| Pentachlorophenol | No | 3.33E-01 | <0.001[c] | 12032 | 0.2 | Dropped[d] | Dropped[d] |
| Phenol | No | 4.12E-01 | 1.69E-03 | 10481 | 0 | No CPF | 3.52E-07 |
| p-Xylene | No | 2.44E-05 | <0.001[c] | 12032 | 0.2 | No CPF | Dropped[d] |
| Pyrene | No | 4.26E-01 | 0 | DNA | 5 | No CPF | 0 |
| Pyridine | No | 3.93E-01 | 1.61E-03 | 10481 | 0 | No CPF | 1.01E-04 |
| Tetrachloroethylene | No | 1.13E-05 | <0.001[c] | 12032 | 0.1 | Dropped[d] | Dropped[d] |
| Toluene | No | 1.01E-05 | <0.001[c] | 12032 | 0.02 | No CPF | Dropped[d] |
| Trichlorofluoromethane | No | 1.29E-05 | <0.001[c] | 12032 | 0.02 | No CPF | Dropped[d] |
| Xylenes | No | 3.16E-05 | <0.001[c] | 12032 | 0.02 | No CPF | Dropped[d] |
| Aroclor-1016 | No | 2.97E-04 | 0 | DNA | 5 | 0 | 0 |
| Aroclor-1221 | No | 9.31E-05 | 0 | DNA | 2 | 0 | No RfD |
| Aroclor-1232 | No | 1.68E-03 | 0 | DNA | 2 | 0 | No RfD |
| Aroclor-1242 | No | 2.97E-04 | 0 | DNA | 5 | 0 | No RfD |

**Table C-4. Estimated Maximum Value for Incremental Lifetime Cancer Risk and Hazard Quotient per Nonradionuclides for the Upper Confidence Level 95% Inventory. (10 sheets)**

| Analyte | Detected | Inventory (kg) | WMA C Fenceline Concentration (µg/L) | Peak Year | $K_d$ (mL/g)[a] | Incremental Lifetime Cancer Risk Scenarios (Groundwater)[b] | Hazard Quotient Scenarios (Groundwater)[b] |
|---|---|---|---|---|---|---|---|
| | | | | | | WAC-173-340 Method B | WAC-173-340 Method B |
| Aroclor-1248 | No | 9.60E-05 | 0 | DNA | 5 | 0 | No RfD |
| Aroclor-1260 | No | 4.10E-04 | 0 | DNA | 5 | 0 | No RfD |
| Polychlorinated Biphenyls | No | 5.97E-05 | 0 | DNA | 5 | 0 | No RfD |
| Performance objective[e] | | | | | | 1.0E-06[f] | 1.0[g] |

[a] See PNNL-13895, *Hanford Contaminant Distribution Coefficient Database and Users Guide*, Rev. 1, for the basis for the $K_d$ values listed for chromium and nitrate. The $K_d$ values listed for the organic chemical compounds are determined from the chemicals' organic carbon/water partitioning coefficient and an estimate of 0.03% for the Hanford Site sediments fraction of organic content (PNNL-13895, Rev. 1, page 11, paragraph 3).
[b] All exposure scenarios are described in HNF-SD-WM-TI-707.
[c] Simulation predicted contaminant arrives at the fenceline, but at a concentration (0.001 µg/L) that is much below the minimum detection limit for standard analytical methods.
[d] Dropped from the analysis because the simulation predicted concentration (0.001 µg/L) is much below the minimum detection limit for standard analytical methods.
[e] Single Analyte Performance objectives apply to entire WMA, not just a single component of the WMA.
[f] *Washington Administrative Code* (WAC) 173-340-705 (2)(c)(ii), "Dangerous Waste Regulations."
[g] WAC 173-340-705 (2)(c)(i).

Notes:
No CPF = no cancer potency factor available.
No RfD = no reference dose available
DNA = did not arrive at fenceline within the modeling period
Gray shaded cells are nondetects and the inventory used in the risk assessment is calculated at one-half the minimum detection limit.