0057667 CH0006

# CH-006
# Batch Data Report
# For
# 233-S ISOCS NDA Assays

**Measurement and Analysis by:** _____ **Date:** 2/13/02
**Marty Winterrose**

**Data Review by:** _____ **Date:** 2/13/02
**Michael G Cantaloub**

RECEIVED
JUN 13 2002
EDMC

RECEIVED

## 1. Introduction

This report documents results for twenty four (24) individual items assayed by Canberra Hanford using the In Situ Object Counting System (ISOCS). All measurements were performed in accordance with the "Sampling and Analysis Plan for the 233-S Plutonium Concentration Facility" (DOE/RL-97-87 Rev. 1) and the Canberra Hanford Quality Control Plan and procedure. The individual items were assayed at the 233-S facility during the time period from October 24, 2001 to January 10, 2002.

## 2. Technical Information

The items were assayed within the assay trailer at the 233-S facility grounds. Assays were conducted in one of two manners: For smaller items, a single sample average spectrum was obtained by measuring the item, manually rotating it 180 degrees then continuing data acquisition. For larger items, two separate spectra were obtained and the assay results averaged or summed as appropriate. Total count times were fixed at 900 or 1800 seconds live time, with the 900 second live times used on the higher dose rate packages.

Items were placed on a cart within a reduced background area of the trailer. The detector was positioned a minimum of 24 inches from the item with the detector face visually centered on the largest surface area of the package. The detector sides were shielded with a lead collimator to minimize scatter and background. Due to very high dose rates, several items (six) required use of a cadmium shield to reduce the low energy flux incident on the detector and thus minimize system dead times.

Individual ISOCS efficiency calibrations were created for each item. Box, pipe, cylinder and flat plate geometry models were used. An item's composition was determined as best as possible through a combination of the item's packaging description, visual inspection, and package handling. Some items proved very easy to model (e.g. flat plate) while others more difficult. Model matrices were varied or the expected activity distribution adjusted to obtain reasonable correlation between the low and high energy Pu-239 and Am-241 emissions. This was not always a viable option, however; as many assays identified only a single Pu-239 and/or Am-241 emission peak.

Final package results were calculated using the Analysis V3b spreadsheet. Data analysis was conservative. Method selections (e.g. measured Am-241 versus Am-241 calculated from the measured Pu-239) normally favored higher final results.

Several analysis spreadsheets showed a "Density > 1" error. This is due almost exclusively to propagating the TMU associated with a flat plate or plates using "Box" assumptions. For metal sheets or straps, the activity is assumed to be limited to the metal's surface (as a thin dirt layer) not distributed within the plate metal and as such, the 'flag' does not show the results to be in error.

As reported in Batch Data Report CH003 (1000-012702-001), during the period of these measurement the ISOCS system software was reloaded from a system backup, overriding the 'current' energy calibration with an earlier calibration. The change has no discernable effect on the measurement results. (See Batch Data Report CH003.)

## 3. Quality Control Results

Daily background and quality control (QC) check source measurements were performed on the system prior to each day's measurements. Charts for these measurements are on pages 5 - 11. The control charts cover the period of October 23, 2001 to January 15, 2002. There were two instances of unusual performance. The first (Nov. 5, 2001) was a result of improper QC source position. The second (Nov. 28, 2001) was attributed to moisture from previous environmental measurements. In both instances the discrepancy was logged, and the situation corrected. There are no indications that performance was effected other than on the specific days. None of the items in this batch were assayed on these dates.

None of the items contained in the data batch report were assayed as a replicate, however; for the time interval covered by this batch, two acceptable replicate assays were performed (October 30, 2001 and January 8, 2002)

## 4. Summary of Results

Full data packages for item are included as an attachment beginning on page 12. The following table (page 4) summarizes the total TRU activity results and plutonium gram values for each item. The 'Pu Mass + 3-sigma' values in the table are based solely on counting statistics. The 'Pu Mass + 3-sigma TMU' values are not included here, but are reported on the final result spreadsheets.

| Summary of package assay results for Data Batch Report CH006 | | | | | | |
|---|---|---|---|---|---|---|
| Package or Item ID | Assay Weight (kg) | TRU Act (nCi/g) | | TRU TMU Uncert (nCi/g) | Pu Mass (g) | Pu Mass(g) + 3 sigma |
| 5160 | 5.0 | 5.69E+03 | ± | **1.03E+03** | 1.77E-01 | 2.28E-01 |
| 5162 | 5.9 | 4.26E+04 | ± | **4.29E+03** | 2.09E+00 | 2.65E+00 |
| 5163 | 0.9 | 8.21E+04 | ± | **2.19E+04** | 4.32E-01 | 5.51E-01 |
| 5235 | 11.4 | 6.99E+04 | ± | **1.54E+04** | 5.18E+00 | 6.54E+00 |
| 5236 | 2.0 | 9.74E+04 | ± | **2.17E+04** | 5.08E-01 | 6.43E-01 |
| 5373 | 0.1 | 5.58E+05 | ± | **5.07E+04** | 6.43E-01 | 7.94E-01 |
| 5024 | 8.4 | 7.10E+02 | ± | **1.19E+02** | 4.04E-02 | 6.41E-02 |
| 3066 | 8.6 | 7.40E+01 | ± | **4.06E+01** | 3.59E-03 | 5.67E-03 |
| 4530 | 5.1 | 6.43E+01 | ± | **1.25E+01** | 2.90E-03 | 5.72E-03 |
| 4929 | 37.7 | 6.64E+02 | ± | **5.25E+01** | 2.19E-01 | 2.76E-01 |
| 2020 | 13.6 | 2.42E+02 | ± | **8.25E+01** | 1.86E-02 | 2.87E-02 |
| 4521 | 5.5 | 1.53E+02 | ± | **4.57E+01** | 6.77E-03 | 1.22E-02 |
| 4537 | 4.1 | 1.26E+02 | ± | **4.71E+01** | 2.91E-03 | 5.70E-03 |
| 4554 | 5.9 | 1.32E+02 | ± | **3.22E+01** | 7.32E-03 | 7.32E-03 |
| 4558 | 9.8 | 1.74E+02 | ± | **5.90E+01** | 9.57E-03 | 1.55E-02 |
| 4769 | 1.6 | 1.00E+02 | ± | **4.55E+01** | 6.93E-03 | 6.93E-03 |
| 4910 | 6.1 | 8.77E+01 | ± | **5.15E+01** | 2.24E-03 | 4.52E-03 |
| 4891 | 5.5 | 7.60E+01 | ± | **3.13E+01** | 2.33E-03 | 4.60E-03 |
| 4908 | 4.5 | 1.23E+02 | ± | **4.86E+01** | 3.15E-03 | 6.23E-03 |
| 4519 | 3.0 | 2.42E+02 | ± | **1.10E+02** | 9.02E-03 | 9.02E-03 |
| 4766 | 7.0 | 1.59E+02 | ± | **8.46E+01** | 6.31E-03 | 1.10E-02 |
| 4785 | 2.3 | 1.81E+02 | ± | **9.24E+01** | 2.31E-03 | 5.03E-03 |
| 4874 | 3.2 | 8.16E+01 | ± | **1.75E+01** | 2.27E-03 | 4.64E-03 |
| 4883 | 2.5 | 1.16E+01 | ± | **3.07E+00** | 5.03E-03 | 5.03E-03 |

# Control Charts

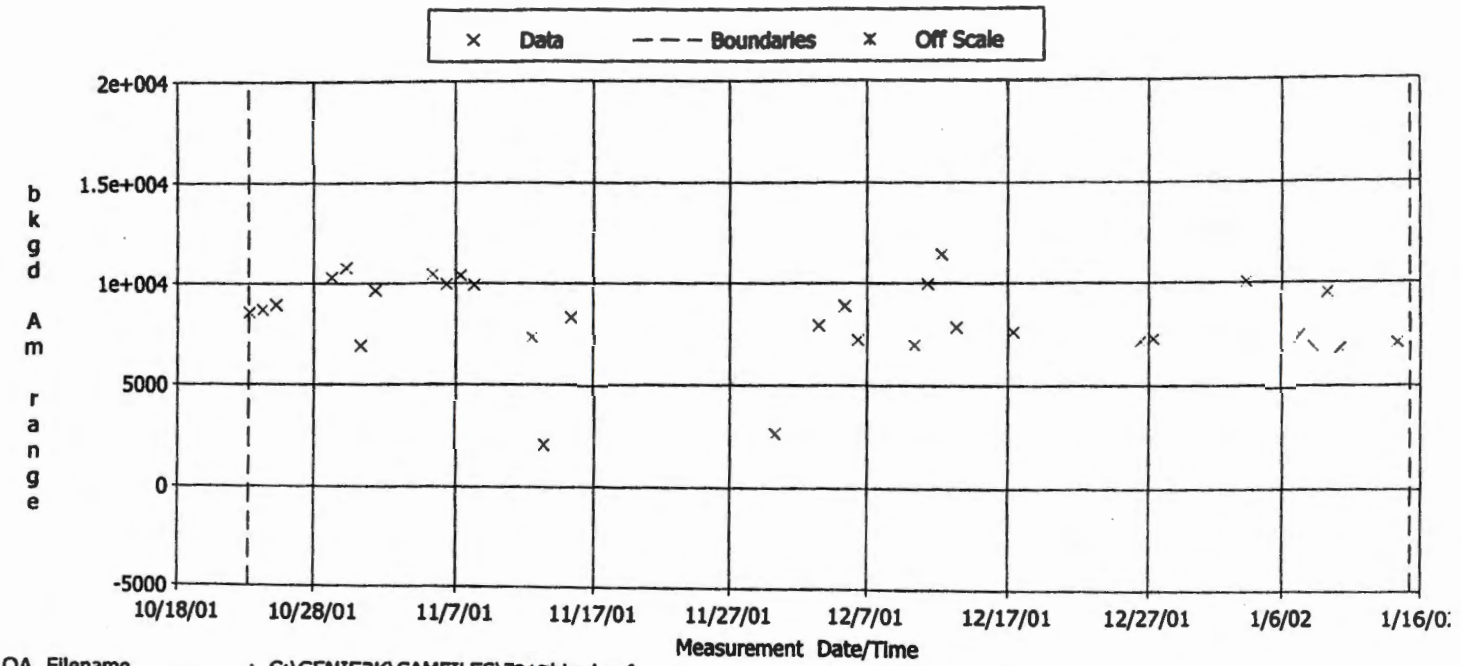


QA Filename : C:\GENIE2K\CAMFILES\7219bkgd.qaf
Parameter Description : bkgd Am range (counts)
Selection Dates : 10/23/01 6:00:00 AM - 1/15/02 6:00:00 AM
Lower/Upper Boundaries : 0.000 - 15000.000

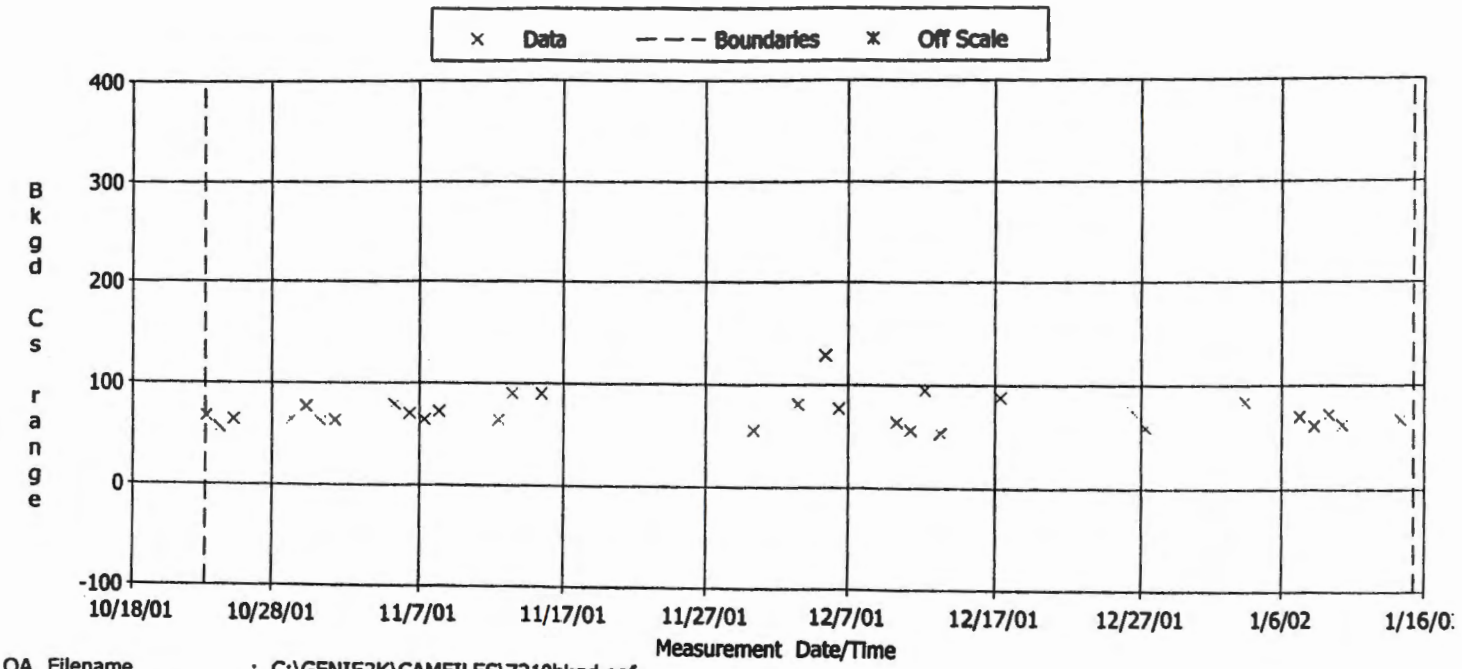


QA Filename : C:\GENIE2K\CAMFILES\7219bkgd.qaf
Parameter Description : Bkgd Cs range (counts)
Selection Dates : 10/23/01 6:00:00 AM - 1/15/02 6:00:00 AM
Lower/Upper Boundaries : 0.000 - 300.000

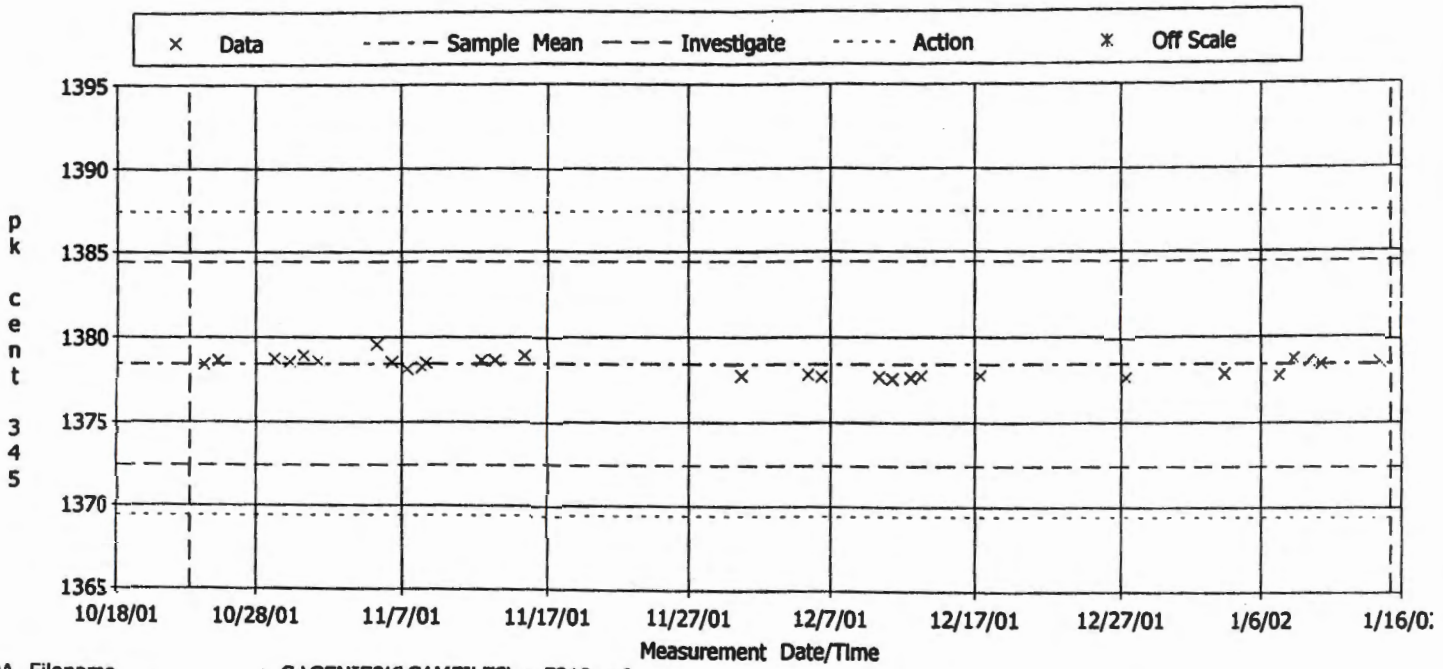


QA Filename : C:\GENIE2K\CAMFILES\qa 7219.qaf
Parameter Description : pk cent 345 (ch)
Selection Dates : 10/23/01 6:00:00 AM - 1/15/02 6:00:00 AM
Sample Mean +/- Std Dev : 1378.420 +/- 3.001

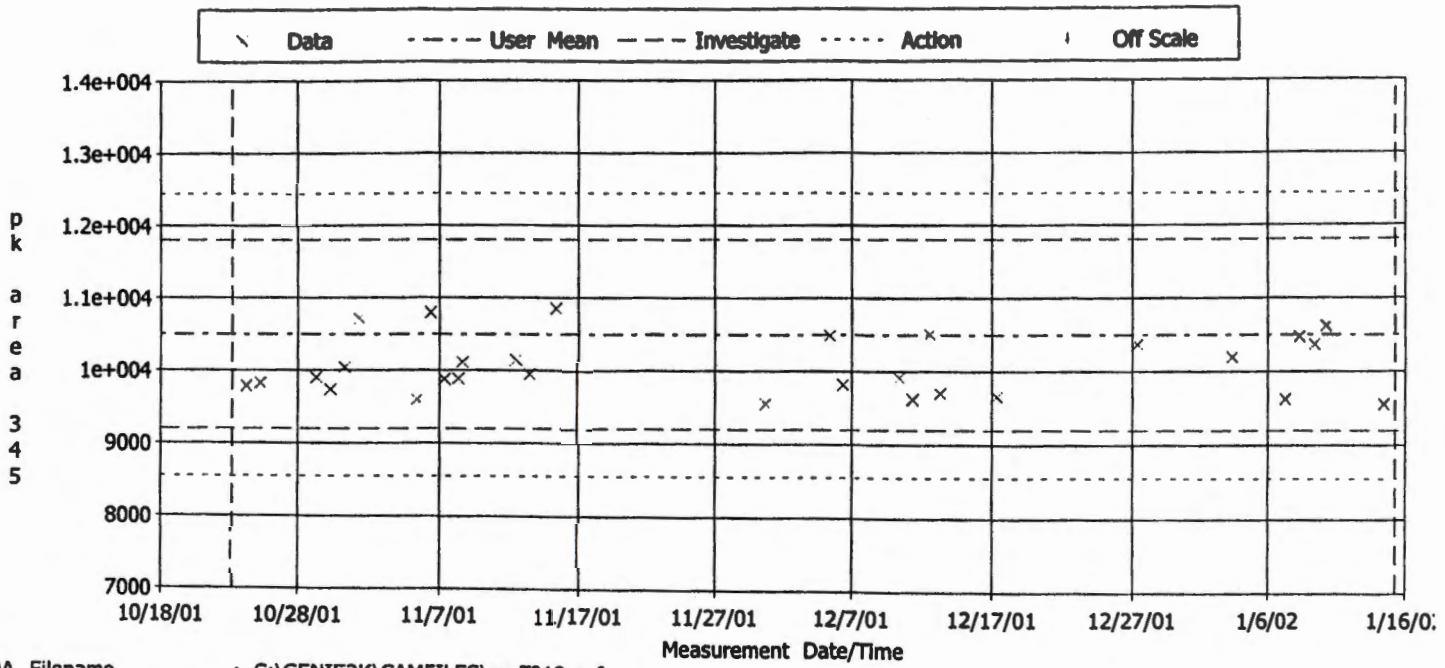


QA Filename : C:\GENIE2K\CAMFILES\qa 7219.qaf
Parameter Description : pk area 345 (counts)
Selection Dates : 10/23/01 6:00:00 AM - 1/15/02 6:00:00 AM
User Mean +/- Std Dev : 10500.000 +/- 6.50e+002

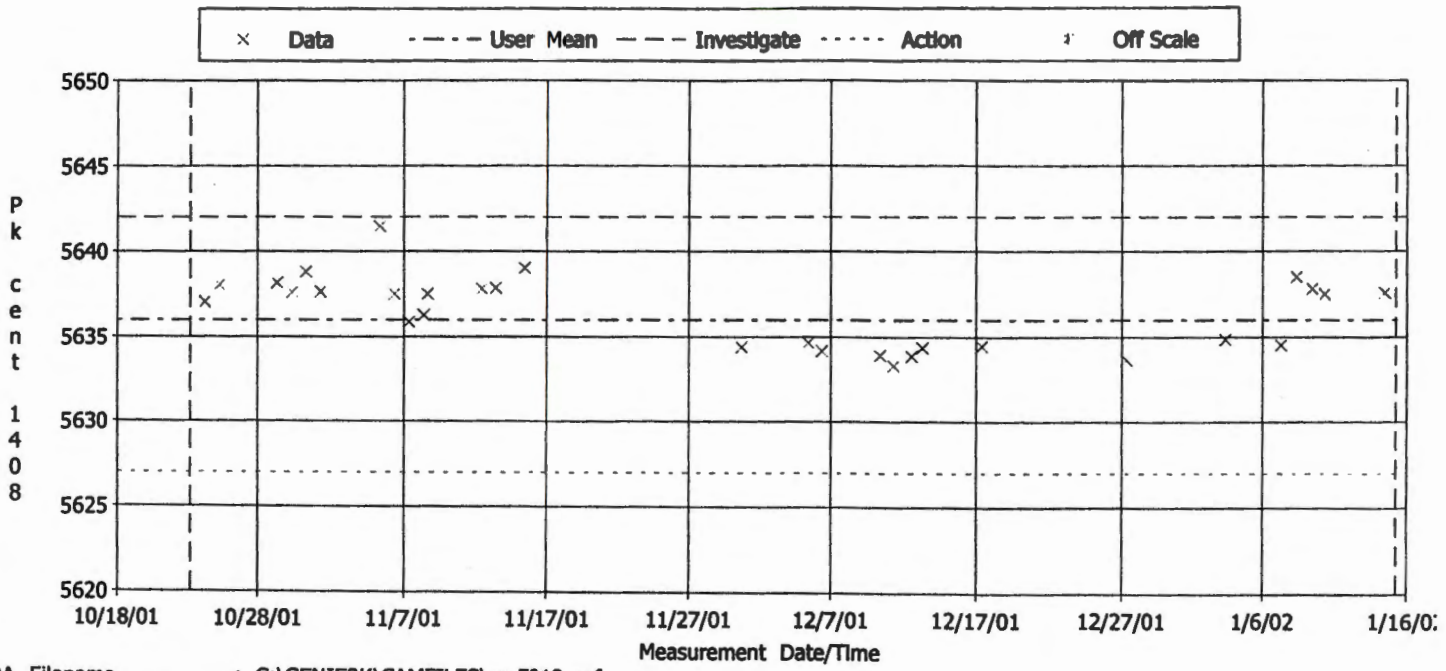


QA Filename : C:\GENIE2K\CAMFILES\qa 7219.qaf
Parameter Description : Pk cent 1408 (ch)
Selection Dates : 10/23/01 6:00:00 AM - 1/15/02 6:00:00 AM
User Mean +/- Std Dev : 5636.000 +/- 3.000

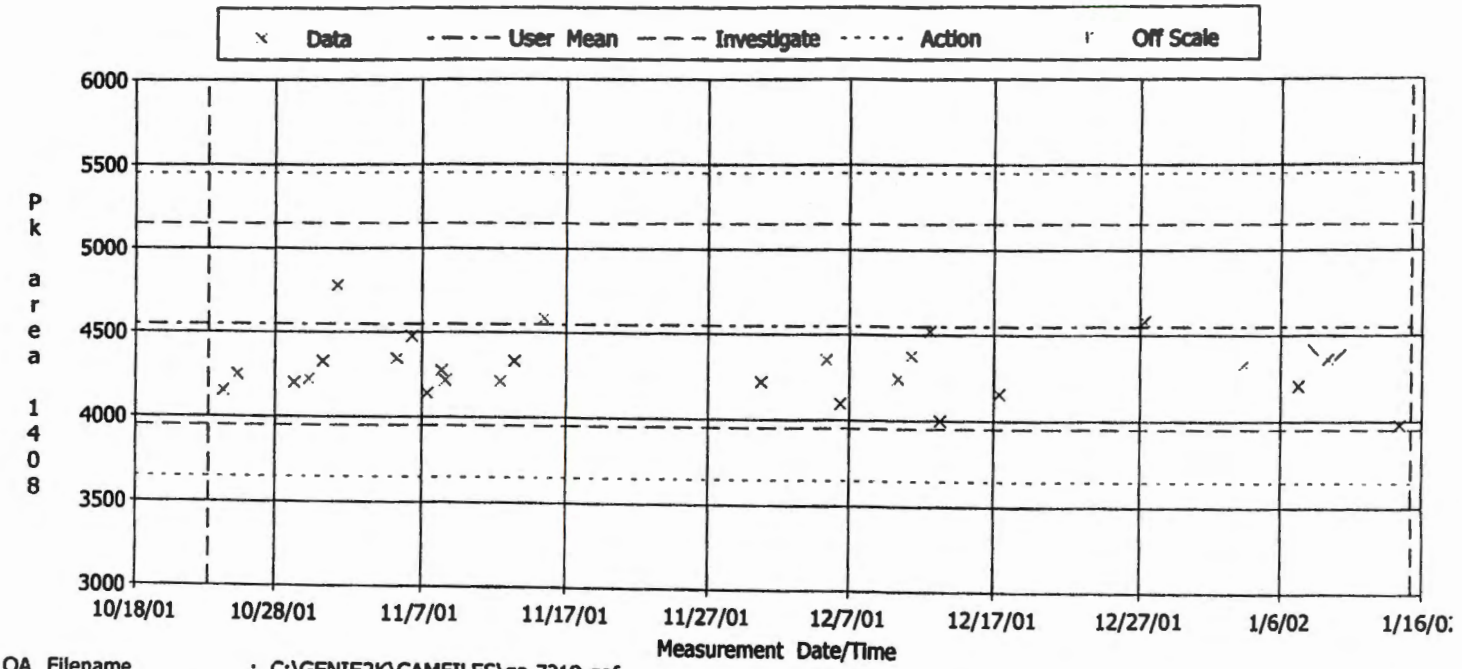


QA Filename : C:\GENIE2K\CAMFILES\qa 7219.qaf
Parameter Description : Pk area 1408 (counts)
Selection Dates : 10/23/01 6:00:00 AM - 1/15/02 6:00:00 AM
User Mean +/- Std Dev : 4550.000 +/- 3.00e+002

# Data Packages

# Bldg 233-S
# NDA Item Description Sheet
# Pipe Geometry

TRU

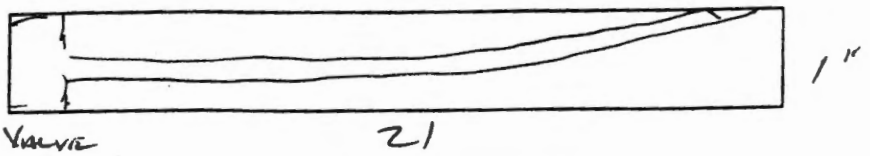


Put Dimensions on Pipe

Item ID: 5160

Weight (kg): 11 LBS 5kg

Material Description: 1" PIPE W/ VALVE

Packaging: 3 LAYERS

Detector Distance (in): 24

Detector Filters: 1

Dose Rate: 50/S

Comments: A 450-880
B 45/0100 881

**233-S Item Analysis** Spreadsheet Version 3.0b 01/14/2002

**Sample Info:**

| | | | |
|---|---|---|---|
| **Item ID:** | 5160 | **Assay Date:** | 24-Oct-01 |
| **File Name:** | 881 | **File Name:** | |

**Data Input:**

| Isotope | Activity (uCi/kg) | Meas Uncert | Activity (uCi/kg) | Meas Uncert |
|---|---|---|---|---|
| Pu-239 (129) | | | | |
| Pu-239 (414) | 1.90E+03 | 1.82E+02 | | |
| Am-241 | 2.03E+03 | 3.50E+02 | | |
| Np-237 | 4.26E-01 | 3.07E-02 | | |
| U-238 | | | | |
| U-235 | | | | |
| Cs-137 | | | | |
| Co-60 | | | | |

**Item Parameters:**

Contamination: Internal Item Type: Pipe or Duct Calcs: Use 1st

**Dimensions:**

| | | | | | |
|---|---|---|---|---|---|
| Length (in): | 21 | Width (in): | 1 | Depth (in): | 1 |
| Weight (lbs): | 11 | Depth for TMU (in): | 4 | % Volume: | 100 |

**Am-241 Calcs:**

| | | | | | |
|---|---|---|---|---|---|
| Measured | 2.03E+03 | +/- | 9.71E+02 | Use Meas |
| Calculated | 2.63E+03 | +/- | 1.25E+03 | |

**Nuclide Activities:**

| Isotope | Activity (nCi/g) | | Total Unc 1 sigma |
|---|---|---|---|
| Pu-238 | 7.71E+02 | +/- | 1.15E+02 |
| Pu-239 | 1.90E+03 | +/- | 2.83E+02 |
| Pu-240 | 9.91E+02 | +/- | 1.47E+02 |
| Pu-241 | 3.70E+03 | +/- | 5.51E+02 |
| Pu-242 | 1.00E+00 | +/- | 1.49E-01 |
| Am-241 | 2.03E+03 | +/- | 9.71E+02 |
| Np-237 | 4.26E-01 | +/- | 5.66E-02 |
| U-238 | 0.00E+00 | +/- | 0.00E+00 |
| U-235 | 0.00E+00 | +/- | 0.00E+00 |
| Cs-137 | 0.00E+00 | +/- | 0.00E+00 |
| Co-60 | 0.00E+00 | +/- | 0.00E+00 |

**Results:**

| | | | | | |
|---|---|---|---|---|---|
| **Total TRU Activity (nCi/g):** | 5.69E+03 | +/- | 1.03E+03 | Calc from Pu-239 Act |
| **Pu (g):** | 1.77E-01 | **Pu (g) + 3 sigma TMU:** | 2.56E-01 | |
| | | **Pu(g) + 3 sigma:** | 2.28E-01 | |

**Comments:**

Am-241 from 722 keV peak.

Errors:

**Analyst:** Martin Winterrose **Date:** 02/10/2002

```
#Date & Time: Wed Oct 24 12:01:48 2001
~g=PIPE
~description=5160_PIPE
~comment=1"_PIPE
~Ccollimator=50MM-180D
~crpn=4
~Detector=7219
~Convergence in %=1            ~MDRPN=4
~Lunit=IN  ~Tunit=C  ~Dunit=G/CU.C    ~Punit=MM.HG
~at=20        ~ap=760       ~rh=50
~Energies kev=   59.540,   88.030,  122.060,  165.850,  391.690,  661.650,#
                898.020, 1173.220, 1332.490, 1836.010,
~Error in %=     10.000,   10.000,   10.000,    8.000,    8.000,    6.000,#
                  6.000,    4.000,    4.000,    4.000,
~d1.1=0.133     ~d1.2=1         ~d1.3=10.5      ~d1.4=10.5      ~1mater=304SS    ~1den=7.81
~d2.1=0.133     ~d2.2=10.5      ~d2.3=10.5      ~2mater=DRYDIRT  ~2den=1.6       ~2con=1
~2Absor=0.0312    ~2Amater=CADMIUM  ~2Aden=8.642
~sd1=24
```

## C A N B E R R A  I S O C S  A N A L Y S I S

Report Generated On : 10/30/01 9:36:11 AM

Sample Title : 5160 Side B
Spectrum Description :
Sample Identification : 0881
Sample Size : 5.0 kg

Sample Taken On : 10/24/01 12:13:00 PM
Acquisition Started : 10/24/01 12:14:27 PM

Live Time: 900.0 seconds Real Time: 904.0 seconds

ISOCS Calabration : 5160 PIPE
Energy Calibration Used Done On : 2/27/01
Efficiency Calibration Used Done On : 10/24/01

## P E A K  A N A L Y S I S  R E P O R T

| Peak No. | Peak centroid | Energy (keV) | Net Peak Area | Net Area Uncert. | Continuum Counts |
|---|---|---|---|---|---|
| 1 | 239.34 | 59.92 | 7.38E+004 | 2440.12 | 1.22E+003 |
| 2 | 293.03 | 73.34 | 6.39E+002 | 45.69 | 9.86E+002 |
| 3 | 301.10 | 75.36 | 1.25E+003 | 53.34 | 1.02E+003 |
| 4 | 340.53 | 85.21 | 5.36E+002 | 49.69 | 1.16E+003 |
| 5 | 350.05 | 87.59 | 2.49E+002 | 44.37 | 1.18E+003 |
| 6 | 396.48 | 99.19 | 4.16E+003 | 152.99 | 1.28E+003 |
| 7 | 413.73 | 103.50 | 2.98E+003 | 139.60 | 1.30E+003 |
| 8 | 445.44 | 111.43 | 6.70E+002 | 55.11 | 1.41E+003 |
| 9 | 459.67 | 114.98 | 4.41E+002 | 52.12 | 1.42E+003 |
| 10 | 494.80 | 123.77 | 2.22E+002 | 41.81 | 1.40E+003 |
| 11 | 502.70 | 125.74 | 1.15E+003 | 50.87 | 1.39E+003 |
| 12 | 518.73 | 129.75 | 1.90E+003 | 56.30 | 1.37E+003 |
| 13 | 587.75 | 147.00 | 1.70E+002 | 36.86 | 1.24E+003 |
| 14 | 595.73 | 148.99 | 3.63E+002 | 39.45 | 1.22E+003 |
| 15 | 833.65 | 208.45 | 2.16E+003 | 60.66 | 6.76E+002 |
| 16 | 1201.78 | 300.45 | 7.86E+002 | 33.43 | 3.08E+002 |
| 17 | 1249.00 | 312.25 | 4.38E+003 | 68.87 | 2.47E+002 |
| 18 | 1332.30 | 333.07 | 4.19E+002 | 25.58 | 1.73E+002 |
| 19 | 1343.52 | 335.88 | 2.42E+002 | 22.23 | 1.71E+002 |
| 20 | 1363.63 | 340.90 | 4.92E+002 | 32.79 | 1.67E+002 |
| 21 | 1378.95 | 344.73 | 1.63E+002 | 34.83 | 1.61E+002 |
| 22 | 1475.00 | 368.74 | 1.29E+002 | 16.00 | 1.31E+002 |
| 23 | 1502.15 | 375.52 | 8.13E+002 | 31.22 | 1.19E+002 |
| 24 | 1522.05 | 380.49 | 1.38E+002 | 19.20 | 1.03E+002 |
| 25 | 1534.09 | 383.50 | 9.55E+001 | 15.07 | 1.04E+002 |
| 26 | 1573.48 | 393.35 | 2.84E+002 | 19.51 | 9.05E+001 |
| 27 | 1595.58 | 398.87 | 1.29E+002 | 14.62 | 8.35E+001 |
| 28 | 1656.37 | 414.06 | 7.07E+002 | 28.56 | 7.12E+001 |
| 29 | 1664.62 | 416.12 | 1.62E+002 | 16.37 | 7.45E+001 |
| 30 | 1807.75 | 451.90 | 8.14E+001 | 11.84 | 5.35E+001 |
| 31 | 2045.74 | 511.37 | 7.70E+001 | 11.20 | 3.64E+001 |
| 32 | 2889.68 | 722.29 | 5.49E+001 | 9.21 | 1.94E+001 |
| 33 | 7065.08 | 1765.80 | 1.54E+001 | 5.18 | 0.00E+000 |

## N U C L I D E  I D E N T I F I C A T I O N  R E P O R T

| Nuclide Name | Id Confidence | Energy (keV) | Yield (%) | Activity (uCi) | Activity Uncertainty |
|---|---|---|---|---|---|
| NP-237 | 0.997 | 300.17* | 6.20 | 4.59767E-001 | 3.81154E-002 |
| | | 312.00* | 36.00 | 4.25669E-001 | 3.06521E-002 |
| | | 340.60* | 4.20 | 4.45804E-001 | 4.16246E-002 |
| | | 415.76* | 1.75 | 3.77669E-001 | 4.36747E-002 |
| Pu-239 | 0.992 | 129.28* | 0.01 | 1.43873E+003 | 2.50321E+002 |
| | | 413.70* | 0.00 | 1.90178E+003 | 1.82458E+002 |
| | | 451.50* @ | 0.00 | 1.79143E+003 | 2.77845E+002 |
| AM-241 | 0.994 | 59.54* | 35.70 | 9.11845E+003 | 9.30428E+002 |
| | | 125.28* | 0.00 | 1.45627E+003 | 1.07378E+002 |
| | | 335.40* | 0.00 | 1.85137E+003 | 2.09439E+002 |
| | | 662.42 @ | 0.00 | | |
| | | 722.70* | 0.00 | 2.02536E+003 | 3.49937E+002 |
| PU-241 | 0.965 | 114.00* | 0.02 | 1.27554E+002 | 1.71157E+001 |
| | | 332.60* | 0.00 | 5.46847E+002 | 4.93603E+001 |

## I N T E R F E R E N C E  C O R R E C T E D  R E P O R T

| Nuclide Name | Nuclide Id Confidence | Wt mean Activity (uCi/kg ) | Wt mean Activity Uncertainty |
|---|---|---|---|
| NP-237 | 0.997 | 4.291475E-001 | 1.871829E-002 |
| Pu-239 @ | 0.992 | 1.741122E+003 | 1.474462E+002 |
| AM-241 @ | 0.994 | 1.645634E+003 | 9.172791E+001 |
| PU-241 | 0.965 | 1.725574E+002 | 1.617112E+001 |

? = nuclide is part of an undetermined solution
X = nuclide rejected by the interference analysis
@ = nuclide contains energy lines not used in Weighted Mean Activity

Errors quoted at 1.000 sigma

## N U C L I D E  T O T A L S

| Nuclide | Mass (g) |
|---|---|
| Pu-239 | 1.40E-001 +/- 1.19E-002 |

**Bldg 233-S**
**NDA Item Description Sheet**
**Pipe Geometry**

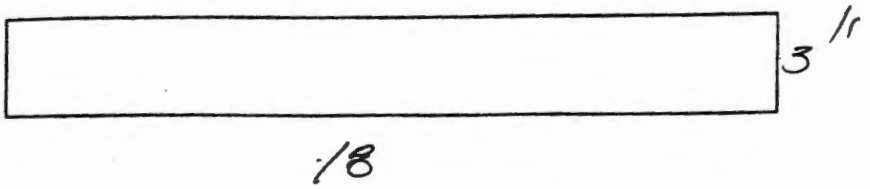


10/24/01

Put Dimensions on Pipe

Item ID: 5163 MW 2

Weight (kg): 13 LBS

Material Description: 3" PIPE W/ FLANGE

Packaging: 3 LAYERS

Detector Distance (in): 24

Detector Filters: 1 CdO

Dose Rate: 50/B

Comments: A 450 0882
B 450/900 0883

## 233-S Item Analysis

Spreadsheet Version 3.0b

1/14/02

**Sample Info:**

**Item ID:** 5162

**File Name:** 883

**Assay Date:** 24-Oct-01

**File Name:**

**Data Input:**

| Isotope | Activity (uCi/kg) | Meas Uncert |
|---|---|---|
| Pu-239 (129) | | |
| Pu-239 (414) | 1.90E+04 | 1.71E+03 |
| Am-241 | 6.00E+03 | 5.95E+02 |
| Np-237 | 3.62E-01 | 2.67E-02 |
| U-238 | | |
| U-235 | | |
| Cs-137 | 2.14E-02 | 1.76E-03 |
| Co-60 | | |

| Activity (uCi/kg) | Meas Uncert |
|---|---|
| | |
| | |
| | |
| | |
| | |
| | |
| | |
| | |

**Item Parameters:**

Contamination: Internal

Item Type: Pipe or Duct

Calcs: Use 1st

**Dimensions:**

Length (in): 18

Weight (lbs): 13

Width (in): 3

Depth for TMU (in): 4

Depth (in): 3

% Volume: 100

**Am-241 Calcs:**

| | | | | |
|---|---|---|---|---|
| Measured | 6.00E+03 | +/- | 2.75E+03 | Use Meas |
| Calculated | 2.63E+04 | +/- | 1.23E+04 | |

**Nuclide Activities:**

| Isotope | Activity (nCi/g) | | Total Unc 1 sigma |
|---|---|---|---|
| Pu-238 | 7.69E+03 | +/- | 1.11E+03 |
| Pu-239 | 1.90E+04 | +/- | 2.75E+03 |
| Pu-240 | 9.88E+03 | +/- | 1.43E+03 |
| Pu-241 | 3.69E+04 | +/- | 5.36E+03 |
| Pu-242 | 9.98E+00 | +/- | 1.45E+00 |
| Am-241 | 6.00E+03 | +/- | 2.75E+03 |
| Np-237 | 3.62E-01 | +/- | 4.85E-02 |
| U-238 | 0.00E+00 | +/- | 0.00E+00 |
| U-235 | 0.00E+00 | +/- | 0.00E+00 |
| Cs-137 | 2.14E-02 | +/- | 2.97E-03 |
| Co-60 | 0.00E+00 | +/- | 0.00E+00 |

**Results:**

| | | | | | |
|---|---|---|---|---|---|
| **Total TRU Activity(nCi/g):** | | 4.26E+04 | +/- | 4.29E+03 | Calc from Pu-239 Act |
| **Pu (g):** | 2.09E+00 | **Pu (g) + 3 sigma TMU:** | | 3.00E+00 | |
| | | **Pu(g) + 3 sigma:** | | 2.65E+00 | |

**Comments:**

Errors:

**Analyst:** Martin Winterrose

**Date:** 2/4/02

```
#Date & Time: Wed Oct 24 12:44:58 2001
~g=PIPE
~description=5162_PIPE
~comment=3"_PIPE_WITH_FLANGE
~Ccollimator=50MM-180D
~crpn=4
~Detector=7219
~Convergence in %=1            ~MDRPN=4
~Lunit=IN  ~Tunit=C  ~Dunit=G/CU.C    ~Punit=MM.HG
~at=20        ~ap=760       ~rh=50
~Energies kev=   59.540,   88.030,  122.060,  165.850,  391.690,  661.650,#
                898.020, 1173.220, 1332.490, 1836.010,
~Error in %=     10.000,   10.000,   10.000,    8.000,    8.000,    6.000,#
                  6.000,    4.000,    4.000,    4.000,
~d1.1=0.216     ~d1.2=3         ~d1.3=9         ~d1.4=9         ~1mater=POLYPROP ~1den=0.91
~d2.1=0.133     ~d2.2=9         ~d2.3=9         ~2mater=304SS    ~2den=7.81      ~2con=1
~2Absor=0.0312    ~2Amater=CADMIUM  ~2Aden=8.642
~sd1=24
```

## C A N B E R R A  I S O C S  A N A L Y S I S

Report Generated On : 12/26/01 12:53:48 PM

Sample Title : 5162 Side B
Spectrum Description :
Sample Identification : 0883
Sample Size : 5.9 kg

Sample Taken On : 10/24/01 1:02:00 PM
Acquisition Started : 10/24/01 1:02:47 PM

Live Time: 900.0 seconds Real Time: 911.5 seconds

ISOCS Calabration : 5162 PIPE
Energy Calibration Used Done On : 2/27/01
Efficiency Calibration Used Done On : 10/24/01

## P E A K  A N A L Y S I S  R E P O R T

| | Peak No. | Peak centroid | Energy (keV) | Net Peak Area | Net Area Uncert. | Continuum Counts |
|---|---|---|---|---|---|---|
| | 1 | 237.82 | 59.54 | 2.04E+005 | 536.96 | 2.29E+004 |
| M | 2 | 292.35 | 73.17 | 2.56E+003 | 224.52 | 4.88E+003 |
| m | 3 | 301.05 | 75.34 | 4.57E+003 | 348.67 | 5.67E+003 |
| M | 4 | 340.33 | 85.16 | 2.14E+003 | 76.99 | 7.49E+003 |
| m | 5 | 349.73 | 87.51 | 6.99E+002 | 68.69 | 9.28E+003 |
| M | 6 | 380.12 | 95.11 | 7.67E+003 | 171.99 | 1.07E+004 |
| m | 7 | 396.10 | 99.10 | 2.70E+004 | 447.46 | 1.34E+004 |
| m | 8 | 414.24 | 103.63 | 1.49E+004 | 260.65 | 1.08E+004 |
| M | 9 | 445.69 | 111.49 | 6.95E+003 | 101.01 | 8.63E+003 |
| m | 10 | 462.04 | 115.58 | 5.52E+003 | 95.64 | 1.19E+004 |
| M | 11 | 502.74 | 125.75 | 2.48E+003 | 79.05 | 5.90E+003 |
| m | 12 | 518.86 | 129.78 | 2.02E+004 | 148.50 | 5.77E+003 |
| M | 13 | 578.18 | 144.60 | 1.22E+003 | 186.37 | 5.24E+003 |
| m | 14 | 586.90 | 146.78 | 9.08E+002 | 143.31 | 4.94E+003 |
| m | 15 | 596.02 | 149.06 | 1.34E+003 | 191.66 | 4.86E+003 |
| M | 16 | 646.03 | 161.56 | 9.46E+002 | 243.72 | 4.70E+003 |
| m | 17 | 660.51 | 165.18 | 3.73E+002 | 76.76 | 8.03E+003 |
| m | 18 | 687.61 | 171.95 | 9.15E+002 | 147.58 | 7.50E+003 |
| | 19 | 718.00 | 179.55 | 2.63E+002 | 103.56 | 3.34E+003 |
| M | 20 | 759.70 | 189.97 | 1.40E+002 | 82.92 | 2.36E+003 |
| m | 21 | 784.13 | 196.07 | 2.24E+002 | 131.93 | 2.79E+003 |
| M | 22 | 815.81 | 203.99 | 3.08E+003 | 126.53 | 2.84E+003 |
| m | 23 | 833.60 | 208.44 | 5.69E+003 | 216.27 | 2.68E+003 |
| | 24 | 1024.00 | 256.02 | 3.96E+002 | 73.58 | 1.60E+003 |
| | 25 | 1200.67 | 300.17 | 4.16E+002 | 66.82 | 1.28E+003 |
| | 26 | 1247.99 | 312.00 | 3.79E+003 | 91.60 | 1.27E+003 |
| M | 27 | 1332.76 | 333.19 | 3.11E+003 | 57.37 | 1.03E+003 |
| m | 28 | 1344.70 | 336.17 | 1.13E+003 | 37.88 | 9.71E+002 |
| m | 29 | 1365.38 | 341.34 | 6.54E+002 | 31.52 | 9.22E+002 |
| m | 30 | 1381.54 | 345.38 | 2.97E+003 | 55.47 | 7.92E+002 |
| M | 31 | 1474.27 | 368.55 | 8.71E+002 | 33.13 | 6.99E+002 |
| m | 32 | 1501.85 | 375.45 | 8.52E+003 | 88.58 | 5.92E+002 |
| m | 33 | 1522.28 | 380.55 | 1.66E+003 | 41.47 | 4.17E+002 |

| | | | | | |
|---|---|---|---|---|---|
| m 34 | 1532.76 | 383.17 | 1.34E+003 | 37.38 | 3.76E+002 |
| M 35 | 1573.23 | 393.29 | 2.88E+003 | 125.54 | 3.35E+002 |
| m 36 | 1595.80 | 398.92 | 1.51E+002 | 17.92 | 3.70E+002 |
| M 37 | 1643.50 | 410.85 | 5.91E+001 | 15.73 | 1.85E+002 |
| m 38 | 1656.53 | 414.10 | 7.48E+003 | 177.71 | 2.61E+002 |
| M 39 | 1692.01 | 422.97 | 5.38E+002 | 69.56 | 2.09E+002 |
| m 40 | 1709.01 | 427.22 | 1.01E+002 | 18.82 | 1.84E+002 |
| 41 | 1806.17 | 451.50 | 9.01E+002 | 38.99 | 1.65E+002 |
| 42 | 2044.00 | 510.94 | 5.97E+001 | 20.60 | 1.04E+002 |

| Peak No. | Peak centroid | Energy (keV) | Net Peak Area | Net Area Uncert. | Continuum Counts |
|---|---|---|---|---|---|
| M 43 | 2585.45 | 646.26 | 5.55E+001 | 9.23 | 6.54E+001 |
| m 44 | 2612.90 | 653.12 | 5.02E+001 | 8.56 | 7.32E+001 |
| 45 | 2650.12 | 662.42 | 4.00E+002 | 27.56 | 9.14E+001 |
| 46 | 2891.32 | 722.70 | 1.78E+002 | 21.15 | 5.80E+001 |
| 47 | 3077.00 | 769.10 | 4.66E+001 | 15.17 | 4.94E+001 |
| 48 | 7069.00 | 1766.78 | 1.92E+001 | 6.04 | 4.79E+000 |

## N U C L I D E  I D E N T I F I C A T I O N  R E P O R T

| Nuclide Name | Id Confidence | Energy (keV) | Yield (%) | Activity (uCi) | Activity Uncertainty |
|---|---|---|---|---|---|
| CS-137 | 0.977 | 661.65* | 85.12 | 2.14251E-002 | 1.76216E-003 |
| NP-237 | 0.998 | 300.17* | 6.20 | 2.27476E-001 | 3.99401E-002 |
| | | 312.00* | 36.00 | 3.62171E-001 | 2.66567E-002 |
| | | 340.60* | 4.20 | 5.53573E-001 | 4.49252E-002 |
| Pu-239 | 0.991 | 129.28* | 0.01 | 1.51178E+004 | 2.59409E+003 |
| | | 375.00* | 0.00 | 1.98828E+004 | 1.75593E+003 |
| | | 413.70* | 0.00 | 1.89722E+004 | 1.71136E+003 |
| | | 451.50* @ | 0.00 | 1.88548E+004 | 1.29982E+003 |
| AM-241 | 1.000 | 59.54* | 35.70 | 6.00428E+003 | 5.94592E+002 |
| | | 125.28* | 0.00 | 3.09240E+003 | 2.07021E+002 |
| | | 335.40* | 0.00 | 8.05745E+003 | 5.96891E+002 |
| | | 662.42* @ | 0.00 | 5.06585E+003 | 4.16428E+002 |
| | | 722.70* | 0.00 | 6.47596E+003 | 8.15809E+002 |
| PU-241 | 0.914 | 114.00* | 0.02 | 1.48675E+003 | 9.72574E+001 |
| | | 332.60* | 0.00 | 3.78369E+003 | 2.61020E+002 |

## I N T E R F E R E N C E  C O R R E C T E D  R E P O R T

| Nuclide Name | Nuclide Id Confidence | Wt mean Activity (uCi/kg ) | Wt mean Activity Uncertainty |
|---|---|---|---|
| CS-137 | 0.977 | 4.563260E-003 | 1.920644E-003 |
| NP-237 | 0.998 | 3.662816E-001 | 1.988244E-002 |
| Pu-239 @ | 0.991 | 1.863153E+004 | 1.108120E+003 |
| AM-241 @ | 1.000 | 3.986894E+003 | 1.811579E+002 |
| PU-241 | 0.914 | 1.766772E+003 | 9.113651E+001 |

? = nuclide is part of an undetermined solution
X = nuclide rejected by the interference analysis
@ = nuclide contains energy lines not used in Weighted Mean Activity

Errors quoted at 1.000 sigma

## N U C L I D E  T O T A L S

| Nuclide | Mass (g) |
|---|---|
| Pu-239 | 1.77E+000 +/- 1.05E-001 |

**********
***** N U C L I D E  M D A  R E P O R T *****
**********

| | Nuclide Name | Energy (keV) | Yield (%) | Line MDA (uCi/kg ) | Nuclide MDA (uCi/kg ) | Activity (uCi/kg ) |
|---|---|---|---|---|---|---|
| | CO-60 | 1173.22 | 100.00 | 1.8618E-003 | 1.86E-003 | -1.5731E-003 |
| | | 1332.49 | 100.00 | 1.9636E-003 | | 1.2824E-003 |
| | CS-134 | 475.35 | 1.46 | 1.9838E-001 | 2.42E-003 | -1.5359E-001 |
| | | 563.23 | 8.38 | 3.0471E-002 | | 1.2562E-002 |
| | | 569.32 | 15.43 | 1.6238E-002 | | -6.2829E-003 |
| | | 604.70 | 97.60 | 2.8765E-003 | | -7.2222E-004 |
| | | 795.84 | 85.40 | 2.4207E-003 | | -7.0002E-004 |
| | | 801.93 | 8.73 | 2.4221E-002 | | 7.5872E-003 |
| | | 1038.57 | 1.00 | 1.9379E-001 | | -5.0105E-002 |
| | | 1167.94 | 1.80 | 1.1419E-001 | | 7.6667E-002 |
| | | 1365.15 | 3.04 | 4.9309E-002 | | -3.5149E-002 |
| + | CS-137 | 661.65* | 85.12 | 3.4936E-003 | 3.49E-003 | 2.1425E-002 |
| + | NP-237 | 300.17* | 6.20 | 1.1586E-001 | 2.16E-002 | 2.2748E-001 |
| | | 312.00* | 36.00 | 2.1551E-002 | | 3.6217E-001 |
| | | 340.60* | 4.20 | 1.2185E-001 | | 5.5357E-001 |
| + | Pu-239 | 129.28* | 0.01 | 2.6700E+002 | 1.97E+002 | 1.5118E+004 |
| | | 375.00* | 0.00 | 2.7052E+002 | | 1.9883E+004 |
| | | 413.70* | 0.00 | 1.9743E+002 | | 1.8972E+004 |
| | | 451.50* | 0.00 | 1.7699E+003 | | 1.8855E+004 |
| + | AM-241 | 59.54* | 35.70 | 2.8059E+001 | 2.81E+001 | 6.0043E+003 |
| | | 125.28* | 0.00 | 4.4864E+002 | | 3.0924E+003 |
| | | 335.40* | 0.00 | 1.0546E+003 | | 8.0574E+003 |
| | | 662.42* | 0.00 | 8.2603E+002 | | 5.0659E+003 |
| | | 722.70* | 0.00 | 2.0622E+003 | | 6.4760E+003 |
| + | PU-241 | 114.00* | 0.02 | 1.3757E+002 | 1.38E+002 | 1.4868E+003 |
| | | 332.60* | 0.00 | 1.8541E+002 | | 3.7837E+003 |
| | CM-243 | 209.70 | 3.27 | 4.8267E-001 | 6.17E-002 | 1.6951E-002 |
| | | 228.18 | 10.56 | 9.5459E-002 | | -7.0996E-003 |
| | | 277.60 | 14.00 | 6.1681E-002 | | 5.5586E-004 |

+ = Nuclide identified during the nuclide identification
* = Energy line found in the spectrum
> = MDA value not calculated
@ = Half-life too short to be able to perform the decay correction

# Bldg 233s
# NDA Item Description Sheet
# Box Geometry

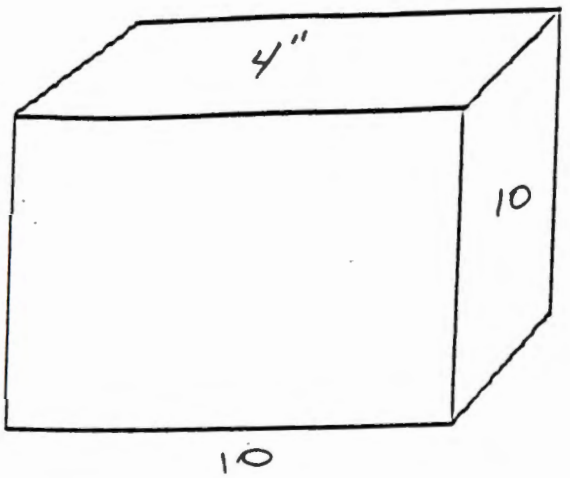


Put Dimensions on Box

.1383

Item ID: 5163

Weight (kg): 2 LBS .907 Kg

Material Description: Bungee Cord

Packaging: 3 Layer

Detector Distance (in): 24"

Detector Filters: 1 Cm D

Dose Rate: 100/18

Comments: A 450 Sec 0876

**233-S Item Analysis** Spreadsheet Version 3.0b 1/14/02

**Sample Info:**

| | | | |
|---|---|---|---|
| **Item ID:** | 5163 | **Assay Date:** | 24-Oct-01 |
| **File Name:** | 877 | **File Name:** | |

**Data Input:**

| Isotope | Activity (uCi/kg) | Meas Uncert |
|---|---|---|
| Pu-239 (129) | | |
| Pu-239 (414) | 2.55E+04 | 2.35E+03 |
| Am-241 | 3.30E+04 | 2.92E+03 |
| Np-237 | 1.06E+00 | 7.69E-02 |
| U-238 | | |
| U-235 | | |
| Cs-137 | 2.09E-02 | 1.01E-02 |
| Co-60 | | |

| Activity (uCi/kg) | Meas Uncert |
|---|---|
| | |
| | |
| | |
| | |
| | |
| | |
| | |
| | |

**Item Parameters:**

Contamination: Internal Item Type: Box Calcs: Use 1st

**Dimensions:**

| | | | | | |
|---|---|---|---|---|---|
| Length (in): | 10 | Width (in): | 10 | Depth (in): | 4 |
| Weight (lbs): | 2 | Depth for TMU (in): | 4 | % Volume: | 100 |

**Am-241 Calcs:**

| | | | | |
|---|---|---|---|---|
| Measured | 3.30E+04 | +/- | 2.13E+04 | Use Meas |
| Calculated | 3.53E+04 | +/- | 1.82E+04 | |

**Nuclide Activities:**

| Isotope | Activity (nCi/g) | | Total Unc 1 sigma |
|---|---|---|---|
| Pu-238 | 1.03E+04 | +/- | 1.76E+03 |
| Pu-239 | 2.55E+04 | +/- | 4.33E+03 |
| Pu-240 | 1.33E+04 | +/- | 2.26E+03 |
| Pu-241 | 4.97E+04 | +/- | 8.44E+03 |
| Pu-242 | 1.34E+01 | +/- | 2.28E+00 |
| Am-241 | 3.30E+04 | +/- | 2.13E+04 |
| Np-237 | 1.06E+00 | +/- | 1.68E-01 |
| U-238 | 0.00E+00 | +/- | 0.00E+00 |
| U-235 | 0.00E+00 | +/- | 0.00E+00 |
| Cs-137 | 2.09E-02 | +/- | 1.05E-02 |
| Co-60 | 0.00E+00 | +/- | 0.00E+00 |

**Results:**

| | | | | |
|---|---|---|---|---|
| **Total TRU Activity(nCi/g):** | 8.21E+04 | +/- | 2.19E+04 | Calc from Pu-239 Act |
| **Pu (g):** | 4.32E-01 | **Pu (g) + 3 sigma TMU:** | 6.52E-01 | |
| | | **Pu(g) + 3 sigma:** | 5.51E-01 | |

**Comments:**

Am-241 value from 722.7 keV peak.

Errors:

**Analyst:** Martin Winterrose **Date:** 1/24/02

```
#Date & Time: Wed Oct 24 09:30:45 2001
~g=SIMPLE_BOX
~description=5163_BOX
~comment=BUNGIE_CORD_AND_DIRT
~Ccollimator=50MM-180D
~crpn=4
~Detector=7219
~Convergence in %=1            ~MDRPN=4
~Lunit=IN  ~Tunit=C  ~Dunit=G/CU.C    ~Punit=MM.HG
~at=20        ~ap=760       ~rh=50
~Energies kev=   59.540,   88.030,  122.060,  165.850,  391.690,  661.650,#
                898.020, 1173.220, 1332.490, 1836.010,
~Error in %=     10.000,   10.000,   10.000,    8.000,    8.000,    6.000,#
                  6.000,    4.000,    4.000,    4.000,
~d1.1=0.024     ~d1.2=10        ~d1.3=10        ~d1.4=4         ~1mater=LPOLYETH ~1den=0.92
~d3.1=9         ~3mater=SAMPLES  ~3den=0.1383    ~3con=1
~1Absor=0.0312    ~1Amater=CADMIUM  ~1Aden=8.642
~sd1=24
```

## C A N B E R R A  I S O C S  A N A L Y S I S

Report Generated On : 10/24/01 9:50:40 AM

Sample Title : 5163 Side B
Spectrum Description :
Sample Identification : 0877
Sample Size : 0.9 kg

Sample Taken On : 10/24/01 9:42:00 AM
Acquisition Started : 10/24/01 9:42:55 AM

Live Time: 900.0 seconds Real Time: 919.3 seconds

ISOCS Calabration : 5163 BOX
Energy Calibration Used Done On : 2/27/01
Efficiency Calibration Used Done On : 10/24/01

## P E A K  A N A L Y S I S  R E P O R T

| Peak No. | Peak centroid | Energy (keV) | Net Peak Area | Net Area Uncert. | Continuum Counts |
|---|---|---|---|---|---|
| 1 | 239.32 | 59.91 | 5.17E+005 | 17840.1 | 6.31E+003 |
| 2 | 340.21 | 85.13 | 1.21E+003 | 82.86 | 3.32E+003 |
| 3 | 396.64 | 99.23 | 2.07E+004 | 837.01 | 3.09E+003 |
| 4 | 413.71 | 103.50 | 1.56E+004 | 709.32 | 2.99E+003 |
| 5 | 445.67 | 111.49 | 2.98E+003 | 133.01 | 2.94E+003 |
| 6 | 459.07 | 114.84 | 2.20E+003 | 186.17 | 2.82E+003 |
| 7 | 502.81 | 125.77 | 5.59E+003 | 324.46 | 2.40E+003 |
| 8 | 518.86 | 129.78 | 9.66E+003 | 120.99 | 2.17E+003 |
| 9 | 595.90 | 149.03 | 1.79E+003 | 148.97 | 1.66E+003 |
| 10 | 612.79 | 153.25 | 3.35E+002 | 39.70 | 1.58E+003 |
| 11 | 643.84 | 161.01 | 3.98E+002 | 45.04 | 1.46E+003 |
| 12 | 660.11 | 165.08 | 4.84E+002 | 48.12 | 1.39E+003 |
| 13 | 679.89 | 170.02 | 2.99E+002 | 41.84 | 1.36E+003 |
| 14 | 784.27 | 196.11 | 2.32E+002 | 31.40 | 9.49E+002 |
| 15 | 833.57 | 208.43 | 8.00E+003 | 93.87 | 7.68E+002 |
| 16 | 1071.61 | 267.92 | 2.07E+002 | 23.57 | 4.18E+002 |
| 17 | 1201.99 | 300.50 | 4.14E+002 | 35.66 | 3.19E+002 |
| 18 | 1249.00 | 312.25 | 2.63E+003 | 54.52 | 2.97E+002 |
| 19 | 1292.77 | 323.19 | 2.90E+002 | 31.07 | 2.73E+002 |
| 20 | 1332.37 | 333.09 | 1.38E+003 | 41.20 | 2.50E+002 |
| 21 | 1343.59 | 335.89 | 9.41E+002 | 36.42 | 2.43E+002 |
| 22 | 1360.80 | 340.20 | 1.05E+002 | 77.22 | 2.24E+002 |
| 23 | 1381.34 | 345.33 | 9.29E+002 | 56.48 | 2.00E+002 |
| 24 | 1475.26 | 368.80 | 4.57E+002 | 42.53 | 1.47E+002 |
| 25 | 1501.80 | 375.43 | 2.19E+003 | 274.71 | 1.39E+002 |
| 26 | 1503.46 | 375.85 | 5.22E+002 | 293.14 | 1.39E+002 |
| 27 | 1522.22 | 380.54 | 4.18E+002 | 52.03 | 1.33E+002 |
| 28 | 1534.18 | 383.53 | 3.54E+002 | 34.80 | 1.30E+002 |
| 29 | 1573.26 | 393.29 | 8.34E+002 | 31.25 | 1.17E+002 |
| 30 | 1656.47 | 414.09 | 2.29E+003 | 66.65 | 9.75E+001 |
| 31 | 1692.37 | 423.06 | 1.63E+002 | 17.99 | 9.15E+001 |
| 32 | 1807.61 | 451.86 | 2.42E+002 | 18.24 | 7.64E+001 |
| 33 | 2045.40 | 511.29 | 1.06E+002 | 13.02 | 4.66E+001 |

| | | | | | |
|---|---|---|---|---|---|
| 34 | 2334.65 | 583.58 | 5.26E+001 | 9.23 | 2.49E+001 |
| 35 | 2648.13 | 661.92 | 8.35E+001 | 39.97 | 2.71E+001 |
| 36 | 2651.20 | 662.69 | 3.94E+002 | 30.10 | 2.89E+001 |
| 37 | 2889.65 | 722.28 | 1.92E+002 | 14.96 | 2.20E+001 |
| 38 | 7065.41 | 1765.88 | 2.70E+001 | 6.28 | 3.33E-001 |

## N U C L I D E  I D E N T I F I C A T I O N  R E P O R T

| Nuclide Name | Id Confidence | Energy (keV) | Yield (%) | Activity (uCi) | Activity Uncertainty |
|---|---|---|---|---|---|
| CS-137 | 0.997 | 661.65* | 85.12 | 2.09103E-002 | 1.00542E-002 |
| NP-237 | 0.993 | 300.17* | 6.20 | 9.49744E-001 | 1.06133E-001 |
| | | 312.00* | 36.00 | 1.05960E+000 | 7.68544E-002 |
| | | 340.60* | 4.20 | 3.78957E-001 | 2.80813E-001 |
| | | 375.45* | 0.68 | 5.17012E+001 | 7.20550E+000 |
| | | 415.76* | 1.75 | 2.21304E+001 | 1.40564E+000 |
| Pu-239 | 0.991 | 129.28* | 0.01 | 2.16635E+004 | 3.72375E+003 |
| | | 375.00* | 0.00 | 2.22184E+004 | 3.40073E+003 |
| | | 413.70* | 0.00 | 2.55746E+004 | 2.34670E+003 |
| | | 451.50* @ | 0.00 | 2.25383E+004 | 2.08660E+003 |
| AM-241 | 0.994 | 59.54* | 35.70 | 1.33946E+004 | 1.37357E+003 |
| | | 125.28* | 0.00 | 2.02953E+004 | 1.67857E+003 |
| | | 335.40* | 0.00 | 2.87463E+004 | 2.20127E+003 |
| | | 662.42* @ | 0.00 | 2.33598E+004 | 2.06557E+003 |
| | | 722.70* | 0.00 | 3.29903E+004 | 2.91891E+003 |
| PU-241 | 0.974 | 114.00* | 0.02 | 1.62834E+003 | 1.72336E+002 |
| | | 332.60* | 0.00 | 7.20537E+003 | 5.24798E+002 |

## I N T E R F E R E N C E  C O R R E C T E D  R E P O R T

| Nuclide Name | Nuclide Id Confidence | Wt mean Activity (uCi/kg ) | Wt mean Activity Uncertainty |
|---|---|---|---|
| CS-137 | 0.997 | 2.091034E-002 | 1.005422E-002 |
| NP-237 | 0.993 | 9.944523E-001 | 6.073762E-002 |
| Pu-239 @ | 0.991 | 2.263905E+004 | 9.596812E+002 |
| AM-241 @ | 0.994 | 1.994491E+004 | 9.095842E+002 |
| PU-241 | 0.974 | 2.171205E+003 | 1.637336E+002 |

? = nuclide is part of an undetermined solution
X = nuclide rejected by the interference analysis
@ = nuclide contains energy lines not used in Weighted Mean Activity

Errors quoted at 1.000 sigma

## N U C L I D E  T O T A L S

| Nuclide | Mass (g) |
|---|---|
| Pu-239 | 3.31E-001 +/- 1.40E-002 |

# Bldg 233s
# NDA Item Description Sheet
# Box Geometry

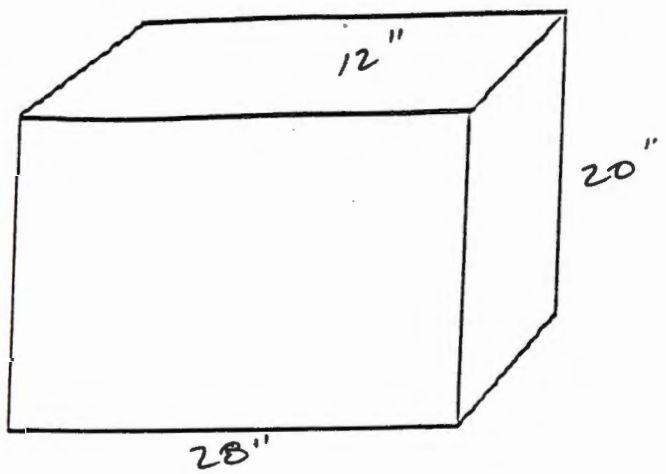


Put Dimensions on Box

Item ID: 5235

Weight (kg): 25 Lbs 11.33 Kg

Material Description: HEPA & PLASTIC HOSE

Packaging: 3 LAYERS

Detector Distance (in): 24

Detector Filters: 1 Cad

Dose Rate: 50/10

Comments: SIDE A 450 0874
SIDE B 900 0875

**233-S Item Analysis** Spreadsheet Version 3.0b 1/14/02

**Sample Info:**

| | | | |
|---|---|---|---|
| **Item ID:** | 5235 | **Assay Date:** | 24-Oct-01 |
| **File Name:** | 875 | **File Name:** | |

**Data Input:**

| Isotope | Activity (uCi/kg) | Meas Uncert | Activity (uCi/kg) | Meas Uncert |
|---|---|---|---|---|
| Pu-239 (129) | | | | |
| Pu-239 (414) | 2.45E+04 | 2.15E+03 | | |
| Am-241 | 2.27E+04 | 1.18E+03 | | |
| Np-237 | 3.64E+00 | 2.54E-01 | | |
| U-238 | | | | |
| U-235 | | | | |
| Cs-137 | 1.20E-02 | 2.03E-03 | | |
| Co-60 | | | | |

**Item Parameters:**

Contamination: Internal Item Type: Box Calcs: Use 1st

**Dimensions:**

| | | | | | |
|---|---|---|---|---|---|
| Length (in): | 28 | Width (in): | 20 | Depth (in): | 12 |
| Weight (lbs): | 25 | Depth for TMU (in): | 4 | % Volume: | 100 |

**Am-241 Calcs:**

| | | | | |
|---|---|---|---|---|
| Measured | 2.27E+04 | +/- | 1.46E+04 | Use Meas |
| Calculated | 3.39E+04 | +/- | 1.74E+04 | |

**Nuclide Activities:**

| Isotope | Activity (nCi/g) | | Total Unc 1 sigma |
|---|---|---|---|
| Pu-238 | 9.93E+03 | +/- | 1.66E+03 |
| Pu-239 | 2.45E+04 | +/- | 4.11E+03 |
| Pu-240 | 1.28E+04 | +/- | 2.14E+03 |
| Pu-241 | 4.77E+04 | +/- | 8.00E+03 |
| Pu-242 | 1.29E+01 | +/- | 2.16E+00 |
| Am-241 | 2.27E+04 | +/- | 1.46E+04 |
| Np-237 | 3.64E+00 | +/- | 5.74E-01 |
| U-238 | 0.00E+00 | +/- | 0.00E+00 |
| U-235 | 0.00E+00 | +/- | 0.00E+00 |
| Cs-137 | 1.20E-02 | +/- | 2.65E-03 |
| Co-60 | 0.00E+00 | +/- | 0.00E+00 |

**Results:**

| | | | | | |
|---|---|---|---|---|---|
| **Total TRU Activity (nCi/g):** | | 6.99E+04 | +/- | 1.54E+04 | Calc from Pu-239 Act |
| **Pu (g):** | 5.18E+00 | **Pu (g) + 3 sigma TMU:** | | 7.79E+00 | |
| | | **Pu(g) + 3 sigma:** | | 6.55E+00 | |

**Comments:** Am-241 value from 722 kev emission.

Errors:

**Analyst:** Martin Winterrose **Date:** 2/11/02

```
#Date & Time: Wed Oct 24 08:45:20 2001
~g=SIMPLE_BOX
~description=5235_SOFTWASTE
~comment=HEPA_AND_HOSE
~Ccollimator=50MM-180D
~crpn=4
~Detector=7219
~Convergence in %=1            ~MDRPN=4
~Lunit=IN  ~Tunit=C  ~Dunit=G/CU.C    ~Punit=MM.HG
~at=20        ~ap=760       ~rh=50
~Energies kev=   59.540,   88.030,  122.060,  165.850,  391.690,  661.650,#
                898.020, 1173.220, 1332.490, 1836.010,
~Error in %=     10.000,   10.000,   10.000,    8.000,    8.000,    6.000,#
                  6.000,    4.000,    4.000,    4.000,
~d1.1=0.024     ~d1.2=28        ~d1.3=20        ~d1.4=12        ~1mater=LPOLYETH ~1den=0.92
~d3.1=19        ~3mater=SAMPLES  ~3den=0.1029    ~3con=1
~1Absor=0.0312    ~1Amater=CADMIUM  ~1Aden=8.642
~sd1=24
```

## C A N B E R R A  I S O C S  A N A L Y S I S

Report Generated On : 10/24/01 9:07:06 AM

Sample Title : 5235 Side B
Spectrum Description :
Sample Identification : 0875
Sample Size : 11.3 kg

Sample Taken On : 10/24/01 8:58:00 AM
Acquisition Started : 10/24/01 8:58:55 AM

Live Time: 900.0 seconds Real Time: 963.7 seconds

ISOCS Calabration : 5235 SOFTWAST
Energy Calibration Used Done On : 2/27/01
Efficiency Calibration Used Done On : 10/24/01

## P E A K  A N A L Y S I S  R E P O R T

| Peak No. | Peak centroid | Energy (keV) | Net Peak Area | Net Area Uncert. | Continuum Counts |
|---|---|---|---|---|---|
| 1 | 239.25 | 59.90 | 1.08E+006 | 40869.8 | 2.77E+004 |
| 2 | 340.17 | 85.12 | 7.20E+003 | 875.98 | 2.36E+004 |
| 3 | 396.30 | 99.15 | 9.21E+004 | 3193.94 | 2.33E+004 |
| 4 | 413.88 | 103.54 | 5.89E+004 | 2621.44 | 2.27E+004 |
| 5 | 445.54 | 111.45 | 1.87E+004 | 879.06 | 2.29E+004 |
| 6 | 459.97 | 115.06 | 1.18E+004 | 1151.12 | 2.21E+004 |
| 7 | 502.66 | 125.73 | 2.19E+004 | 1198.91 | 1.82E+004 |
| 8 | 518.75 | 129.75 | 5.88E+004 | 495.77 | 1.65E+004 |
| 9 | 577.01 | 144.31 | 1.61E+003 | 373.54 | 1.43E+004 |
| 10 | 644.38 | 161.15 | 2.25E+003 | 240.63 | 1.31E+004 |
| 11 | 660.18 | 165.10 | 2.75E+003 | 157.93 | 1.28E+004 |
| 12 | 680.13 | 170.08 | 1.34E+003 | 266.49 | 1.32E+004 |
| 13 | 718.41 | 179.65 | 9.33E+002 | 103.19 | 1.22E+004 |
| 14 | 758.40 | 189.64 | 1.08E+003 | 96.09 | 1.12E+004 |
| 15 | 783.87 | 196.01 | 1.84E+003 | 98.67 | 1.04E+004 |
| 16 | 815.58 | 203.93 | 8.37E+003 | 132.65 | 9.37E+003 |
| 17 | 833.54 | 208.42 | 4.25E+004 | 285.84 | 8.78E+003 |
| 18 | 1022.96 | 255.76 | 1.17E+003 | 66.69 | 6.36E+003 |
| 19 | 1071.98 | 268.01 | 1.35E+003 | 100.16 | 5.82E+003 |
| 20 | 1086.74 | 271.70 | 6.30E+002 | 72.65 | 5.67E+003 |
| 21 | 1201.95 | 300.49 | 1.26E+004 | 231.99 | 4.17E+003 |
| 22 | 1248.97 | 312.25 | 7.61E+004 | 289.74 | 3.48E+003 |
| 23 | 1292.00 | 323.00 | 1.30E+003 | 154.77 | 2.88E+003 |
| 24 | 1332.29 | 333.07 | 9.38E+003 | 160.01 | 2.57E+003 |
| 25 | 1343.63 | 335.90 | 5.30E+003 | 162.95 | 2.47E+003 |
| 26 | 1363.63 | 340.90 | 8.90E+003 | 733.68 | 2.28E+003 |
| 27 | 1379.67 | 344.91 | 5.28E+003 | 906.12 | 2.13E+003 |
| 28 | 1474.75 | 368.67 | 2.92E+003 | 224.12 | 1.49E+003 |
| 29 | 1501.58 | 375.38 | 1.85E+004 | 621.46 | 1.37E+003 |
| 30 | 1503.17 | 375.78 | 5.84E+003 | 1774.49 | 1.37E+003 |
| 31 | 1521.96 | 380.47 | 3.69E+003 | 401.36 | 1.28E+003 |
| 32 | 1533.82 | 383.43 | 2.83E+003 | 309.23 | 1.21E+003 |
| 33 | 1573.11 | 393.25 | 6.67E+003 | 130.77 | 1.02E+003 |

| | | | | | |
|---|---|---|---|---|---|
| 34 | 1595.53 | 398.86 | 2.45E+003 | 57.84 | 9.25E+002 |
| 35 | 1656.28 | 414.04 | 1.85E+004 | 189.56 | 6.83E+002 |
| 36 | 1664.53 | 416.10 | 2.98E+003 | 95.72 | 6.55E+002 |
| 37 | 1691.76 | 422.91 | 1.38E+003 | 56.47 | 5.47E+002 |
| 38 | 1708.36 | 427.06 | 3.96E+002 | 29.17 | 4.99E+002 |
| 39 | 1807.37 | 451.80 | 2.30E+003 | 53.04 | 3.53E+002 |
| 40 | 2045.38 | 511.28 | 1.72E+002 | 19.42 | 1.82E+002 |
| 41 | 2334.21 | 583.47 | 1.26E+002 | 15.07 | 1.04E+002 |
| 42 | 2476.80 | 619.10 | 3.99E+002 | 22.68 | 8.99E+001 |

| Peak No. | Peak centroid | Energy (keV) | Net Peak Area | Net Area Uncert. | Continuum Counts |
|---|---|---|---|---|---|
| 43 | 2563.17 | 640.69 | 1.21E+002 | 15.80 | 7.79E+001 |
| 44 | 2585.50 | 646.27 | 1.37E+002 | 15.94 | 7.59E+001 |
| 45 | 2612.45 | 653.00 | 3.05E+002 | 20.40 | 7.34E+001 |
| 46 | 2648.20 | 661.94 | 4.11E+002 | 66.91 | 7.00E+001 |
| 47 | 2651.27 | 662.71 | 2.00E+003 | 81.80 | 6.97E+001 |
| 48 | 2756.65 | 689.04 | 1.46E+002 | 14.76 | 6.40E+001 |
| 49 | 2889.50 | 722.25 | 1.13E+003 | 34.84 | 4.77E+001 |
| 50 | 3026.48 | 756.48 | 9.91E+001 | 12.03 | 2.97E+001 |
| 51 | 3069.90 | 767.33 | 6.47E+001 | 16.89 | 3.16E+001 |
| 52 | 3484.25 | 870.89 | 1.26E+002 | 12.54 | 2.01E+001 |
| 53 | 5103.46 | 1275.55 | 5.87E+001 | 9.20 | 1.22E+001 |

## NUCLIDE IDENTIFICATION REPORT

| Nuclide Name | Id Confidence | Energy (keV) | Yield (%) | Activity (uCi) | Activity Uncertainty |
|---|---|---|---|---|---|
| CS-137 | 0.997 | 661.65* | 85.12 | 1.20401E-002 | 2.03187E-003 |
| NP-237 | 0.997 | 300.17* | 6.20 | 3.44044E+000 | 2.52783E-001 |
| | | 312.00* | 36.00 | 3.64265E+000 | 2.53524E-001 |
| | | 340.60* | 4.20 | 3.82717E+000 | 4.02579E-001 |
| | | 375.45* | 0.68 | 5.16525E+001 | 3.58590E+000 |
| | | 415.76* | 1.75 | 3.41410E+000 | 2.21190E-001 |
| Pu-239 | 0.992 | 129.28* | 0.01 | 1.63449E+004 | 2.80545E+003 |
| | | 375.00* | 0.00 | 2.21975E+004 | 2.08506E+003 |
| | | 413.70* | 0.00 | 2.44870E+004 | 2.14561E+003 |
| | | 451.50* @ | 0.00 | 2.52800E+004 | 1.47640E+003 |
| AM-241 | 0.995 | 59.54* | 35.70 | 5.24365E+003 | 5.44310E+002 |
| | | 125.28* | 0.00 | 9.92678E+003 | 7.97739E+002 |
| | | 335.40* | 0.00 | 1.91944E+004 | 1.39872E+003 |
| | | 662.42* @ | 0.00 | 1.38261E+004 | 8.38310E+002 |
| | | 722.70* | 0.00 | 2.26911E+004 | 1.18007E+003 |
| PU-241 | 0.960 | 114.00* | 0.02 | 1.10295E+003 | 1.28447E+002 |
| | | 332.60* | 0.00 | 5.78695E+003 | 3.97194E+002 |

## INTERFERENCE CORRECTED REPORT

| Nuclide Name | Nuclide Id Confidence | Wt mean Activity (uCi/kg ) | Wt mean Activity Uncertainty |
|---|---|---|---|
| CS-137 | 0.997 | 1.204006E-002 | 2.031872E-003 |
| NP-237 | 0.997 | 3.531130E+000 | 1.314417E-001 |
| Pu-239 @ | 0.992 | 1.929971E+004 | 7.047283E+002 |
| AM-241 @ | 0.995 | 9.618526E+003 | 4.023937E+002 |
| PU-241 | 0.960 | 1.546423E+003 | 1.222154E+002 |

? = nuclide is part of an undetermined solution
X = nuclide rejected by the interference analysis
@ = nuclide contains energy lines not used in Weighted Mean Activity

Errors quoted at 1.000 sigma

## NUCLIDE TOTALS

| Nuclide | Mass (g) |
|---|---|
| Pu-239 | 3.53E+000 +/- 1.29E-001 |

# Bldg 233s
# NDA Item Description Sheet
# Box Geometry

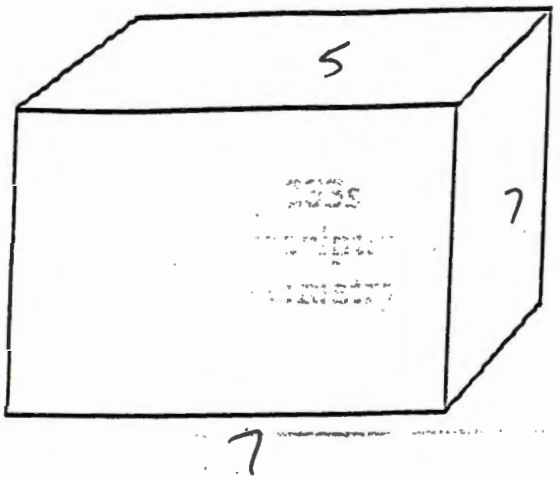


Put Dimensions on Box

Item ID: 5236

Weight (kg): 4.5 lbs 2.04 kg

Material Description: Floor Debris

Packaging: 3 Layer Poly

Detector Distance (in): 24"

Detector Filters: 1 Cmo

Dose Rate: 60/5

Comments: Side A 450 0878
Side B 450/900 0879

**233-S Item Analysis** Spreadsheet Version 3.0b 1/14/02

**Sample Info:**

| | | | |
|---|---|---|---|
| **Item ID:** | 5236 | **Assay Date:** | 24-Oct-01 |
| **File Name:** | 879 | **File Name:** | |

**Data Input:**

| Isotope | Activity (uCi/kg) | Meas Uncert | Activity (uCi/kg) | Meas Uncert |
|---|---|---|---|---|
| Pu-239 (129) | | | | |
| Pu-239 (414) | 2.94E+04 | 2.60E+03 | | |
| Am-241 | 1.21E+04 | 1.30E+03 | | |
| Np-237 | 3.33E+00 | 2.34E-01 | | |
| U-238 | | | | |
| U-235 | | | | |
| Cs-137 | 4.82E-02 | 3.51E-03 | | |
| Co-60 | | | | |

**Item Parameters:**

| | | | | | |
|---|---|---|---|---|---|
| Contamination: | Internal | Item Type: | Box | Calcs: | Use 1st |

**Dimensions:**

| | | | | | |
|---|---|---|---|---|---|
| Length (in): | 7 | Width (in): | 7 | Depth (in): | 5 |
| Weight (lbs): | 2.04 | Depth for TMU (in): | 4 | % Volume: | 100 |

**Am-241 Calcs:**

| | | | | |
|---|---|---|---|---|
| Measured | 1.21E+04 | +/- | 7.86E+03 | Calc from Pu-239 |
| Calculated | 4.07E+04 | +/- | 2.09E+04 | |

**Nuclide Activities:**

| Isotope | Activity (nCi/g) | | Total Unc 1 sigma |
|---|---|---|---|
| Pu-238 | 1.19E+04 | +/- | 2.00E+03 |
| Pu-239 | 2.94E+04 | +/- | 4.94E+03 |
| Pu-240 | 1.53E+04 | +/- | 2.58E+03 |
| Pu-241 | 5.73E+04 | +/- | 9.62E+03 |
| Pu-242 | 1.55E+01 | +/- | 2.60E+00 |
| Am-241 | 4.07E+04 | +/- | 2.09E+04 |
| Np-237 | 3.33E+00 | +/- | 5.26E-01 |
| U-238 | 0.00E+00 | +/- | 0.00E+00 |
| U-235 | 0.00E+00 | +/- | 0.00E+00 |
| Cs-137 | 4.82E-02 | +/- | 7.66E-03 |
| Co-60 | 0.00E+00 | +/- | 0.00E+00 |

**Results:**

| | | | | | |
|---|---|---|---|---|---|
| **Total TRU Activity(nCi/g):** | | 9.74E+04 | +/- | 2.17E+04 | Calc from Pu-239 Act |
| **Pu (g):** | 5.08E-01 | **Pu (g) + 3 sigma TMU:** | | 7.64E-01 | |
| | | **Pu(g) + 3 sigma:** | | 6.43E-01 | |

**Comments:** Errors:

**Analyst:** Martin Winterrose **Date:** 2/6/02

```
#Date & Time: Wed Oct 24 10:13:31 2001
~g=SIMPLE_BOX
~description=5236_BOX
~comment=FLOOR_DEBRY
~Ccollimator=50MM~180D
~crpn=4
~Detector=7219
~Convergence in %=1            ~MDRPN=4
~Lunit=IN  ~Tunit=C  ~Dunit=G/CU.C    ~Punit=MM.HG
~at=20        ~ap=760       ~rh=50
~Energies kev=   59.540,   88.030,  122.060,  165.850,  391.690,  661.650,#
                898.020, 1173.220, 1332.490, 1836.010,
~Error in %=     10.000,   10.000,   10.000,    8.000,    8.000,    6.000,#
                  6.000,    4.000,    4.000,    4.000,
~d1.1=0.024     ~d1.2=7         ~d1.3=7         ~d1.4=5         ~1mater=LPOLYETH ~1den=0.92
~d3.1=6.5       ~3mater=SAMPLES  ~3den=0.5084    ~3con=1
~1Absor=0.0312    ~1Amater=CADMIUM  ~1Aden=8.642
~sd1=24
```

## C A N B E R R A  I S O C S  A N A L Y S I S

Report Generated On : 10/24/01 10:35:42 AM

Sample Title : 5236 Side B
Spectrum Description :
Sample Identification : 0879
Sample Size : 2.0 kg

Sample Taken On : 10/24/01 10:26:00 AM
Acquisition Started : 10/24/01 10:27:58 AM

Live Time: 900.0 seconds Real Time: 912.6 seconds

ISOCS Calabration : 5236 BOX
Energy Calibration Used Done On : 2/27/01
Efficiency Calibration Used Done On : 10/24/01

## P E A K  A N A L Y S I S  R E P O R T

| Peak No. | Peak centroid | Energy (keV) | Net Peak Area | Net Area Uncert. | Continuum Counts |
|---|---|---|---|---|---|
| 1 | 239.32 | 59.92 | 2.47E+005 | 8094.42 | 4.24E+003 |
| 2 | 340.12 | 85.11 | 1.27E+003 | 198.25 | 3.83E+003 |
| 3 | 379.77 | 95.02 | 5.40E+003 | 252.90 | 3.92E+003 |
| 4 | 396.05 | 99.08 | 2.03E+004 | 618.24 | 3.91E+003 |
| 5 | 414.16 | 103.61 | 1.01E+004 | 609.37 | 3.86E+003 |
| 6 | 445.55 | 111.46 | 4.70E+003 | 244.87 | 3.97E+003 |
| 7 | 461.12 | 115.35 | 2.77E+003 | 337.30 | 3.85E+003 |
| 8 | 502.67 | 125.73 | 3.51E+003 | 187.08 | 3.36E+003 |
| 9 | 518.83 | 129.77 | 1.77E+004 | 294.68 | 3.10E+003 |
| 10 | 575.29 | 143.88 | 2.35E+002 | 122.14 | 2.73E+003 |
| 11 | 644.88 | 161.27 | 6.34E+002 | 68.74 | 2.47E+003 |
| 12 | 660.94 | 165.29 | 3.28E+002 | 61.49 | 2.40E+003 |
| 13 | 758.79 | 189.74 | 2.85E+002 | 42.62 | 2.11E+003 |
| 14 | 784.32 | 196.12 | 4.53E+002 | 43.71 | 1.98E+003 |
| 15 | 815.35 | 203.88 | 2.13E+003 | 86.62 | 1.84E+003 |
| 16 | 833.63 | 208.44 | 5.69E+003 | 86.78 | 1.75E+003 |
| 17 | 1022.77 | 255.71 | 2.57E+002 | 33.25 | 1.16E+003 |
| 18 | 1201.93 | 300.49 | 2.48E+003 | 76.00 | 7.66E+002 |
| 19 | 1249.04 | 312.26 | 1.44E+004 | 141.63 | 6.73E+002 |
| 20 | 1290.68 | 322.67 | 1.82E+002 | 35.28 | 5.78E+002 |
| 21 | 1332.62 | 333.15 | 2.14E+003 | 61.01 | 5.23E+002 |
| 22 | 1343.82 | 335.95 | 8.80E+002 | 45.60 | 4.91E+002 |
| 23 | 1363.71 | 340.92 | 1.69E+003 | 166.59 | 4.55E+002 |
| 24 | 1380.50 | 345.12 | 1.69E+003 | 220.12 | 4.05E+002 |
| 25 | 1474.47 | 368.60 | 5.83E+002 | 55.08 | 2.80E+002 |
| 26 | 1501.62 | 375.39 | 4.58E+003 | 322.21 | 2.53E+002 |
| 27 | 1502.19 | 375.53 | 4.39E+003 | 140.93 | 2.53E+002 |
| 28 | 1521.80 | 380.43 | 9.27E+002 | 90.34 | 2.29E+002 |
| 29 | 1533.79 | 383.43 | 7.95E+002 | 67.41 | 2.20E+002 |
| 30 | 1573.29 | 393.30 | 1.82E+003 | 45.49 | 1.89E+002 |
| 31 | 1595.49 | 398.85 | 4.93E+002 | 25.75 | 1.71E+002 |
| 32 | 1656.46 | 414.09 | 4.69E+003 | 77.08 | 1.36E+002 |
| 33 | 1664.71 | 416.15 | 5.17E+002 | 32.60 | 1.26E+002 |

| | | | | | |
|---|---|---|---|---|---|
| 34 | 1691.98 | 422.96 | 3.18E+002 | 26.90 | 1.10E+002 |
| 35 | 1807.38 | 451.80 | 5.66E+002 | 25.67 | 6.65E+001 |
| 36 | 2044.80 | 511.14 | 7.23E+001 | 11.10 | 4.19E+001 |
| 37 | 2476.75 | 619.09 | 5.80E+001 | 9.92 | 3.06E+001 |
| 38 | 2650.96 | 662.63 | 3.56E+002 | 20.43 | 2.35E+001 |
| 39 | 2889.78 | 722.32 | 1.31E+002 | 13.01 | 2.03E+001 |
| 40 | 3647.54 | 911.69 | 3.14E+001 | 7.60 | 1.18E+001 |
| 41 | 7066.51 | 1766.16 | 2.35E+001 | 5.81 | 1.34E-001 |

## NUCLIDE IDENTIFICATION REPORT

| Nuclide Name | Id Confidence | Energy (keV) | Yield (%) | Activity (uCi) | Activity Uncertainty |
|---|---|---|---|---|---|
| CS-137 | 0.962 | 661.65* | 85.12 | 4.81934E-002 | 3.50864E-003 |
| NP-237 | 0.997 | 300.17* | 6.20 | 3.27929E+000 | 2.54103E-001 |
| | | 312.00* | 36.00 | 3.32986E+000 | 2.33721E-001 |
| | | 340.60* | 4.20 | 3.48772E+000 | 4.13320E-001 |
| | | 375.45* | 0.68 | 6.12352E+001 | 5.68903E+000 |
| | | 415.76* | 1.75 | 2.81167E+000 | 2.37521E-001 |
| Pu-239 | 0.992 | 129.28* | 0.01 | 2.61062E+004 | 4.49655E+003 |
| | | 375.00* | 0.00 | 2.63157E+004 | 2.95801E+003 |
| | | 413.70* | 0.00 | 2.94113E+004 | 2.60460E+003 |
| | | 451.50* @ | 0.00 | 2.93675E+004 | 2.06384E+003 |
| AM-241 | 0.994 | 59.54* | 35.70 | 6.97714E+003 | 7.11526E+002 |
| | | 125.28* | 0.00 | 8.46004E+003 | 6.72362E+002 |
| | | 335.40* | 0.00 | 1.53546E+004 | 1.28913E+003 |
| | | 662.42* @ | 0.00 | 1.13950E+004 | 8.29026E+002 |
| | | 722.70* | 0.00 | 1.21245E+004 | 1.30317E+003 |
| PU-241 | 0.936 | 114.00* | 0.02 | 1.38778E+003 | 1.90557E+002 |
| | | 332.60* | 0.00 | 6.37375E+003 | 4.60921E+002 |

## INTERFERENCE CORRECTED REPORT

| Nuclide Name | Nuclide Id Confidence | Wt mean Activity (uCi/kg ) | Wt mean Activity Uncertainty |
|---|---|---|---|
| CS-137 | 0.962 | 9.756998E-003 | 3.952172E-003 |
| NP-237 | 0.997 | 3.169504E+000 | 1.319922E-001 |
| Pu-239 @ | 0.992 | 2.711610E+004 | 1.052090E+003 |
| AM-241 @ | 0.994 | 9.088063E+003 | 4.312167E+002 |
| PU-241 | 0.936 | 2.115595E+003 | 1.761007E+002 |

? = nuclide is part of an undetermined solution
X = nuclide rejected by the interference analysis
@ = nuclide contains energy lines not used in Weighted Mean Activity

Errors quoted at 1.000 sigma

## NUCLIDE TOTALS

| Nuclide | Mass (g) |
|---|---|
| Pu-239 | 8.92E-001 +/- 3.46E-002 |

# Bldg 233s
# NDA Item Description Sheet
# Bottle Geometry

COUNTED AS POINT SOURCE

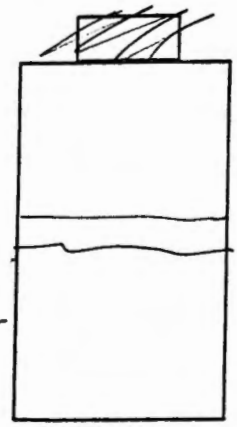

1/2 FULL

2"

60 MIL SAMPLE

1.574803
1.850394

60cc

3.60 KG
GROSS .2267
TARE .091
NET .1357
GRAMS

.1136 KG

2"

Put Dimensions on Bottle

~~198.4 GRAM~~
~~TARE 91 GRAM~~

GROSS 226.7962
TARE .91 GRM
NET 135.79 GRM
OK

Item ID: 5373

Weight (kg): ~~.5~~ ~~.125~~ ~~.1136 KG~~

.2993 LBS

.1984 GROS
.1074 NET

Material Description: POWDER

Packaging: 3 LAYER

.179
.00179
1.79
DENSITY
1.321

Detector Distance (in): 24

Detector Filters: 1 CAD

Dose Rate: 14/2

Comments: 60 ML 1/4 FULL BLACK POWDER
COUNTED AS POINT SOURCE FOR BEST RESULTS
WITH CAD A 300SEC 894
WITHOUT B. 900SEC 895

## 233-S Item Analysis

Spreadsheet Version 3.0b

1/14/02

**Sample Info:**

**Item ID:** 5373

**File Name:** 895

**Assay Date:** 29-Oct-01

**File Name:**

**Data Input:**

| Isotope | Activity (uCi/kg) | Meas Uncert |
|---|---|---|
| Pu-239 (129) | | |
| Pu-239 (414) | 2.54E+05 | 1.98E+04 |
| Am-241 | 6.84E+04 | 1.71E+04 |
| Np-237 | 6.22E-01 | 1.11E-01 |
| U-238 | | |
| U-235 | | |
| Cs-137 | 8.04E-01 | 5.88E-02 |
| Co-60 | | |

| Activity (uCi/kg) | Meas Uncert |
|---|---|
| | |
| | |
| | |
| | |
| | |
| | |
| | |
| | |

**Item Parameters:**

Contamination: Internal

Item Type: Bag

Calcs: Use 1st

**Dimensions:**

Length (in): 2

Width (in): 2

Depth (in): 2

Weight (lbs): 0.2993

Depth for TMU (in): 4

% Volume: 100

**Am-241 Calcs:**

| | | | | |
|---|---|---|---|---|
| Measured | 6.84E+04 | +/- | 3.23E+04 | Use Meas |
| Calculated | 3.52E+05 | +/- | 1.54E+05 | |

**Nuclide Activities:**

| Isotope | Activity (nCi/g) | | Total Unc 1 sigma |
|---|---|---|---|
| Pu-238 | 1.03E+05 | +/- | 1.32E+04 |
| Pu-239 | 2.54E+05 | +/- | 3.26E+04 |
| Pu-240 | 1.32E+05 | +/- | 1.70E+04 |
| Pu-241 | 4.95E+05 | +/- | 6.35E+04 |
| Pu-242 | 1.34E+02 | +/- | 1.72E+01 |
| Am-241 | 6.84E+04 | +/- | 3.23E+04 |
| Np-237 | 6.22E-01 | +/- | 1.27E-01 |
| U-238 | 0.00E+00 | +/- | 0.00E+00 |
| U-235 | 0.00E+00 | +/- | 0.00E+00 |
| Cs-137 | 8.04E-01 | +/- | 9.96E-02 |
| Co-60 | 0.00E+00 | +/- | 0.00E+00 |

**Results:**

| | | | | | |
|---|---|---|---|---|---|
| **Total TRU Activity(nCi/g):** | | 5.58E+05 | +/- | 5.07E+04 | Calc from Pu-239 Act |
| **Pu (g):** | 6.43E-01 | **Pu (g) + 3 sigma TMU:** | | 8.91E-01 | |
| | | **Pu(g) + 3 sigma:** | | 7.94E-01 | |

**Comments:**

Density error due to small sample size. AM-241 value from 722 Kev peak.

Errors:Density > 1,

**Analyst:** Martin Winterrose

**Date:** 2/11/02

```
#Date & Time: Wed Dec 26 13:10:05 2001
~g=SIMPLE_CYLINDER
~description=5373A
~comment=60_MIL_SAMPLE_POWDER
~Ccollimator=50MM-180D
~crpn=4
~Detector=7219
~Convergence in %=1            ~MDRPN=4
~Lunit=IN  ~Tunit=C  ~Dunit=G/CU.C    ~Punit=MM.HG
~at=20        ~ap=760       ~rh=50
~Energies kev=   50.000,  100.000,  128.000,  130.000,  150.000,  200.000,#
                300.000,  500.000,  700.000, 1000.000, 1400.000, 2000.000,#
               4000.000,
~Error in %=     10.000,   10.000,   10.000,   10.000,   10.000,    8.000,#
                  8.000,    6.000,    6.000,    4.000,    4.000,    4.000,#
                  4.000,
~d1.1=0.0625    ~d1.2=2         ~d1.3=2         ~1mater=GLASS    ~1den=2.6
~d3.1=1         ~3mater=DRYDIRT  ~3den=1.321     ~3con=1
~2Absor=0.0312    ~2Amater=CADMIUM  ~2Aden=8.642
~sd1=24
```

## C A N B E R R A  I S O C S  A N A L Y S I S

Report Generated On : 12/26/01 1:11:09 PM

Sample Title : 5373 60 Mil Sample Med
Spectrum Description :
Sample Identification : 0895
Sample Size : 0.1 kg

Sample Taken On : 10/29/01 9:30:00 AM
Acquisition Started : 10/29/01 9:47:56 AM

Live Time: 900.0 seconds Real Time: 903.4 seconds

ISOCS Calabration : 5373A
Energy Calibration Used Done On : 2/27/01
Efficiency Calibration Used Done On : 12/26/01

## P E A K  A N A L Y S I S  R E P O R T

| | Peak No. | Peak centroid | Energy (keV) | Net Peak Area | Net Area Uncert. | Continuum Counts |
|---|---|---|---|---|---|---|
| | 1 | 237.82 | 59.54 | 3.20E+004 | 220.30 | 4.56E+003 |
| M | 2 | 292.56 | 73.22 | 9.86E+002 | 122.10 | 1.80E+003 |
| m | 3 | 301.13 | 75.36 | 1.85E+003 | 193.07 | 2.24E+003 |
| M | 4 | 340.27 | 85.14 | 7.25E+002 | 170.83 | 2.72E+003 |
| m | 5 | 350.24 | 87.64 | 2.76E+002 | 73.66 | 3.15E+003 |
| M | 6 | 396.20 | 99.12 | 6.58E+003 | 95.18 | 5.80E+003 |
| m | 7 | 414.34 | 103.66 | 3.94E+003 | 74.05 | 4.48E+003 |
| M | 8 | 445.84 | 111.53 | 2.47E+003 | 61.86 | 3.53E+003 |
| m | 9 | 462.14 | 115.60 | 1.92E+003 | 59.16 | 5.00E+003 |
| M | 10 | 502.58 | 125.71 | 1.38E+003 | 64.26 | 2.91E+003 |
| m | 11 | 518.89 | 129.79 | 7.81E+003 | 233.30 | 2.37E+003 |
| M | 12 | 578.24 | 144.62 | 4.08E+002 | 158.47 | 1.66E+003 |
| m | 13 | 587.20 | 146.86 | 3.61E+002 | 141.54 | 1.73E+003 |
| m | 14 | 595.95 | 149.04 | 4.09E+002 | 150.90 | 1.80E+003 |
| | 15 | 643.00 | 160.80 | 1.77E+002 | 86.13 | 2.07E+003 |
| | 16 | 688.00 | 172.05 | 1.96E+002 | 65.07 | 1.34E+003 |
| M | 17 | 759.04 | 189.80 | 1.89E+002 | 28.54 | 1.19E+003 |
| m | 18 | 784.78 | 196.24 | 1.78E+002 | 27.64 | 9.81E+002 |
| M | 19 | 815.87 | 204.01 | 1.21E+003 | 41.34 | 8.91E+002 |
| m | 20 | 833.76 | 208.48 | 2.04E+003 | 49.24 | 1.02E+003 |
| | 21 | 1024.00 | 256.02 | 1.27E+002 | 39.57 | 5.00E+002 |
| | 22 | 1247.99 | 312.00 | 2.01E+002 | 34.64 | 3.47E+002 |
| M | 23 | 1332.83 | 333.20 | 1.27E+003 | 102.93 | 3.83E+002 |
| m | 24 | 1344.81 | 336.20 | 4.30E+002 | 39.49 | 3.45E+002 |
| | 25 | 1377.12 | 344.27 | 1.06E+003 | 45.25 | 3.26E+002 |
| M | 26 | 1474.55 | 368.62 | 2.61E+002 | 20.22 | 3.90E+002 |
| m | 27 | 1501.97 | 375.47 | 3.18E+003 | 54.81 | 3.17E+002 |
| m | 28 | 1522.48 | 380.60 | 6.11E+002 | 26.23 | 2.43E+002 |
| m | 29 | 1532.84 | 383.19 | 5.34E+002 | 24.70 | 2.01E+002 |
| | 30 | 1574.00 | 393.48 | 1.05E+003 | 44.21 | 2.32E+002 |
| | 31 | 1654.92 | 413.70 | 2.91E+003 | 58.53 | 1.27E+002 |
| | 32 | 1692.00 | 422.97 | 2.02E+002 | 26.14 | 1.30E+002 |
| | 33 | 1806.17 | 451.50 | 3.44E+002 | 26.18 | 9.41E+001 |

| | | | | | |
|---|---|---|---|---|---|
| 34 | 2046.00 | 511.44 | 1.06E+002 | 22.74 | 9.68E+001 |
| 35 | 2440.00 | 609.91 | 7.31E+001 | 16.78 | 5.59E+001 |
| 36 | 2650.12 | 662.42 | 4.13E+002 | 27.27 | 7.31E+001 |
| 37 | 2891.32 | 722.70 | 5.18E+001 | 12.87 | 3.62E+001 |
| 38 | 7070.00 | 1767.03 | 4.12E+001 | 8.48 | 6.76E+000 |

## N U C L I D E  I D E N T I F I C A T I O N  R E P O R T

| Nuclide Name | Id Confidence | Energy (keV) | Yield (%) | Activity (uCi) | Activity Uncertainty |
|---|---|---|---|---|---|
| CS-137 | 0.977 | 661.65* | 85.12 | 8.04160E-001 | 5.88296E-002 |
| NP-237 | 0.642 | 300.17 | 6.20 | | |
| | | 312.00* | 36.00 | 6.22212E-001 | 1.11338E-001 |
| | | 340.60 | 4.20 | | |
| Pu-239 | 0.992 | 129.28* | 0.01 | 1.52177E+005 | 2.59513E+004 |
| | | 375.00* | 0.00 | 2.50927E+005 | 1.98266E+004 |
| | | 413.70* | 0.00 | 2.54472E+005 | 2.05170E+004 |
| | | 451.50* @ | 0.00 | 2.52038E+005 | 2.15803E+004 |
| AM-241 | 1.000 | 59.54* | 35.70 | 1.23060E+004 | 9.82492E+002 |
| | | 125.28* | 0.00 | 4.41989E+004 | 2.97094E+003 |
| | | 335.40* | 0.00 | 1.01281E+005 | 1.04361E+004 |
| | | 662.42* @ | 0.00 | 1.90139E+005 | 1.39004E+004 |
| | | 722.70* | 0.00 | 6.84304E+004 | 1.71452E+004 |
| PU-241 | 0.911 | 114.00* | 0.02 | 1.28987E+004 | 8.01635E+002 |
| | | 332.60* | 0.00 | 5.10714E+004 | 4.77158E+003 |

## I N T E R F E R E N C E  C O R R E C T E D  R E P O R T

| Nuclide Name | Nuclide Id Confidence | Wt mean Activity (uCi/kg ) | Wt mean Activity Uncertainty |
|---|---|---|---|
| CS-137 | 0.977 | 7.352917E-001 | 5.892031E-002 |
| NP-237 | 0.642 | 6.222122E-001 | 1.113376E-001 |
| Pu-239 @ | 0.992 | 2.293472E+005 | 1.249574E+004 |
| AM-241 @ | 1.000 | 1.628349E+004 | 9.277427E+002 |
| PU-241 | 0.911 | 1.394654E+004 | 7.905561E+002 |

? = nuclide is part of an undetermined solution
X = nuclide rejected by the interference analysis
@ = nuclide contains energy lines not used in Weighted Mean Activity

Errors quoted at 1.000 sigma

## N U C L I D E  T O T A L S

| Nuclide | Mass (g) |
|---|---|
| Pu-239 | 5.02E-001 +/- 2.74E-002 |

**********
***** N U C L I D E M D A R E P O R T *****
**********

| | Nuclide Name | Energy (keV) | Yield (%) | Line MDA (uCi/kg ) | Nuclide MDA (uCi/kg ) | Activity (uCi/kg ) |
|---|---|---|---|---|---|---|
| | CO-60 | 1173.22 | 100.00 | 8.2272E-002 | 7.15E-002 | -2.3186E-002 |
| | | 1332.49 | 100.00 | 7.1470E-002 | | -2.0168E-002 |
| | CS-134 | 475.35 | 1.46 | 6.6601E+000 | 9.33E-002 | 9.8237E-001 |
| | | 563.23 | 8.38 | 1.0392E+000 | | 4.2753E-001 |
| | | 569.32 | 15.43 | 5.9874E-001 | | 6.7170E-001 |
| | | 604.70 | 97.60 | 1.0090E-001 | | -3.0132E-002 |
| | | 795.84 | 85.40 | 9.3337E-002 | | -3.8254E-003 |
| | | 801.93 | 8.73 | 9.1588E-001 | | -5.4804E-001 |
| | | 1038.57 | 1.00 | 7.4144E+000 | | -4.4460E+000 |
| | | 1167.94 | 1.80 | 4.5206E+000 | | -7.7347E-001 |
| | | 1365.15 | 3.04 | 2.0672E+000 | | 2.0762E+000 |
| + | CS-137 | 661.65* | 85.12 | 1.2180E-001 | 1.22E-001 | 8.0416E-001 |
| + | NP-237 | 300.17 | 6.20 | 2.7195E+000 | 3.30E-001 | 2.4032E+000 |
| | | 312.00* | 36.00 | 3.3046E-001 | | 6.2221E-001 |
| | | 340.60 | 4.20 | 5.8591E+000 | | 9.8650E-001 |
| + | Pu-239 | 129.28* | 0.01 | 4.4724E+003 | 4.47E+003 | 1.5218E+005 |
| | | 375.00* | 0.00 | 6.7567E+003 | | 2.5093E+005 |
| | | 413.70* | 0.00 | 6.7600E+003 | | 2.5447E+005 |
| | | 451.50* | 0.00 | 4.6545E+004 | | 2.5204E+005 |
| + | AM-241 | 59.54* | 35.70 | 1.6363E+002 | 1.64E+002 | 1.2306E+004 |
| | | 125.28* | 0.00 | 8.1368E+003 | | 4.4199E+004 |
| | | 335.40* | 0.00 | 2.1022E+004 | | 1.0128E+005 |
| | | 662.42* | 0.00 | 2.8799E+004 | | 1.9014E+005 |
| | | 722.70* | 0.00 | 4.9995E+004 | | 6.8430E+004 |
| + | PU-241 | 114.00* | 0.02 | 2.2276E+003 | 2.23E+003 | 1.2899E+004 |
| | | 332.60* | 0.00 | 3.7631E+003 | | 5.1071E+004 |
| | CM-243 | 209.70 | 3.27 | 8.4968E+000 | 1.16E+000 | 1.3043E+000 |
| | | 228.18 | 10.56 | 1.7125E+000 | | 1.6717E-001 |
| | | 277.60 | 14.00 | 1.1601E+000 | | -2.5536E-001 |

+ = Nuclide identified during the nuclide identification
* = Energy line found in the spectrum
> = MDA value not calculated
@ = Half-life too short to be able to perform the decay correction

**Bldg 233-S**
**NDA Item Description Sheet**
**Pipe Geometry**

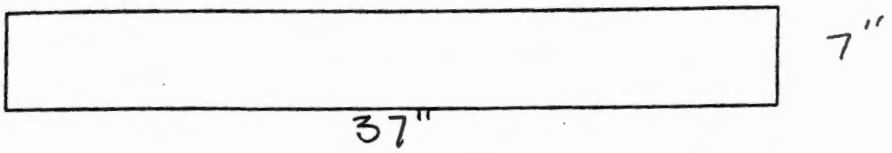


Put Dimensions on Pipe

Item ID: 5024

Weight (kg): 18.5 LB 8.40

Material Description: 7" x 3/16" TITANIUM

Packaging: 3 Layers Poly

Detector Distance (in): 37"

Detector Filters: _____

Dose Rate: _____

Comments: VESSEL L-12
SIDE A 9005RL 0957
SIDE B 1800 5RL 0958

## 233-S Item Analysis

Spreadsheet Version 3.0b

1/14/02

**Sample Info:**

**Item ID:** 5024

**File Name:** 958

**Assay Date:** 13-Nov-01

**File Name:**

**Data Input:**

| Isotope | Activity (uCi/kg) | Meas Uncert |
|---|---|---|
| Pu-239 (129) | | |
| Pu-239 (414) | 2.58E+02 | 5.05E+01 |
| Am-241 | 2.13E+02 | 1.69E+01 |
| Np-237 | 8.32E-03 | 1.97E-03 |
| U-238 | | |
| U-235 | | |
| Cs-137 | 5.41E-03 | 6.99E-04 |
| Co-60 | | |

| Activity (uCi/kg) | Meas Uncert |
|---|---|
| | |
| | |
| | |
| | |
| | |
| | |
| | |
| | |

**Item Parameters:**

Contamination: Internal

Item Type: Pipe or Duct

Calcs: Use 1st

**Dimensions:**

Length (in): 37

Weight (lbs): 18.5

Width (in): 7

Depth for TMU (in): 4

Depth (in): 7

% Volume: 100

**Am-241 Calcs:**

| | | | | |
|---|---|---|---|---|
| Measured | 2.13E+02 | +/- | 9.65E+01 | Use Meas |
| Calculated | 3.57E+02 | +/- | 2.27E+02 | |

**Nuclide Activities:**

| Isotope | Activity (nCi/g) | | Total Unc 1 sigma |
|---|---|---|---|
| Pu-238 | 1.05E+02 | +/- | 2.36E+01 |
| Pu-239 | 2.58E+02 | +/- | 5.83E+01 |
| Pu-240 | 1.34E+02 | +/- | 3.04E+01 |
| Pu-241 | 5.02E+02 | +/- | 1.14E+02 |
| Pu-242 | 1.36E-01 | +/- | 3.07E-02 |
| Am-241 | 2.13E+02 | +/- | 9.65E+01 |
| Np-237 | 8.32E-03 | +/- | 2.17E-03 |
| U-238 | 0.00E+00 | +/- | 0.00E+00 |
| U-235 | 0.00E+00 | +/- | 0.00E+00 |
| Cs-137 | 5.41E-03 | +/- | 9.24E-04 |
| Co-60 | 0.00E+00 | +/- | 0.00E+00 |

**Results:**

| | | | | | |
|---|---|---|---|---|---|
| **Total TRU Activity(nCi/g):** | | 7.10E+02 | +/- | 1.19E+02 | Calc from Pu-239 Act |
| **Pu (g):** | 4.04E-02 | **Pu (g) + 3 sigma TMU:** | | 6.78E-02 | |
| | | **Pu(g) + 3 sigma:** | | 6.41E-02 | |

**Comments:**

Errors:

**Analyst:** Martin Winterrose

**Date:** 2/4/02

```
#Date & Time: Tue Nov 13 15:09:45 2001
~g=PIPE
~description=5024_PIPE
~comment=7"_3/16_WALL_TITAINUM
~Ccollimator=50MM-180D
~crpn=4
~Detector=7219
~Convergence in %=1            ~MDRPN=4
~Lunit=IN  ~Tunit=C  ~Dunit=G/CU.C    ~Punit=MM.HG
~at=20        ~ap=760       ~rh=50
~Energies kev=   50.000,  100.000,  128.000,  130.000,  150.000,  200.000,#
                300.000,  500.000,  700.000, 1000.000, 1400.000, 2000.000,#
               4000.000,
~Error in %=     10.000,   10.000,   10.000,   10.000,   10.000,    8.000,#
                  8.000,    6.000,    6.000,    4.000,    4.000,    4.000,#
                  4.000,
~d1.1=0.188     ~d1.2=7         ~d1.3=18.5      ~d1.4=18.5      ~1mater=TITAINUM ~1den=4.54
~d2.1=0.133     ~d2.2=18.5      ~d2.3=18.5      ~2mater=DRYDIRT  ~2den=1.6       ~2con=1
~sd1=37
```

## C A N B E R R A  I S O C S  A N A L Y S I S

Report Generated On : 12/26/01 1:22:58 PM

Sample Title : 5024 Side B
Spectrum Description :
Sample Identification : 0958
Sample Size : 8.4 kg

Sample Taken On : 11/13/01 3:27:00 PM
Acquisition Started : 11/13/01 3:27:40 PM

Live Time: 1800.0 seconds Real Time: 1813.8 seconds

ISOCS Calabration : 5024 PIPE
Energy Calibration Used Done On : 2/27/01
Efficiency Calibration Used Done On : 11/13/01

## P E A K  A N A L Y S I S  R E P O R T

| | Peak No. | Peak centroid | Energy (keV) | Net Peak Area | Net Area Uncert. | Continuum Counts |
|---|---|---|---|---|---|---|
| | 1 | 237.82 | 59.54 | 3.82E+005 | 733.29 | 4.21E+004 |
| | 2 | 340.00 | 85.08 | 7.30E+002 | 139.17 | 5.30E+003 |
| M | 3 | 370.62 | 92.73 | 1.54E+002 | 53.71 | 3.05E+003 |
| m | 4 | 380.19 | 95.12 | 4.66E+002 | 82.22 | 5.62E+003 |
| m | 5 | 396.12 | 99.10 | 1.43E+003 | 211.92 | 5.71E+003 |
| M | 6 | 494.63 | 123.72 | 1.51E+002 | 53.85 | 2.94E+003 |
| m | 7 | 518.83 | 129.77 | 7.92E+002 | 164.37 | 4.58E+003 |
| | 8 | 1247.99 | 312.00 | 1.20E+002 | 27.75 | 1.73E+002 |
| | 9 | 1330.41 | 332.60 | 8.91E+001 | 24.46 | 1.63E+002 |
| | 10 | 1409.00 | 352.24 | 7.07E+001 | 21.64 | 1.44E+002 |
| | 11 | 1501.87 | 375.45 | 1.29E+002 | 25.35 | 1.45E+002 |
| | 12 | 1654.92 | 413.70 | 1.34E+002 | 23.95 | 1.29E+002 |
| | 13 | 2047.00 | 511.69 | 1.77E+002 | 24.94 | 1.15E+002 |
| | 14 | 2439.00 | 609.66 | 1.19E+002 | 20.67 | 7.96E+001 |
| | 15 | 2647.04 | 661.65 | 1.24E+002 | 15.58 | 3.08E+001 |
| | 16 | 3647.00 | 911.56 | 6.01E+001 | 14.99 | 4.39E+001 |
| | 17 | 7066.00 | 1766.03 | 5.12E+001 | 7.87 | 2.78E+000 |

## NUCLIDE IDENTIFICATION REPORT

| Nuclide Name | Id Confidence | Energy (keV) | Yield (%) | Activity (uCi) | Activity Uncertainty |
|---|---|---|---|---|---|
| CS-137 | 1.000 | 661.65* | 85.12 | 5.40769E-003 | 6.99189E-004 |
| NP-237 | 0.642 | 300.17 | 6.20 | | |
| | | 312.00* | 36.00 | 8.31745E-003 | 1.96566E-003 |
| | | 340.60 | 4.20 | | |
| Pu-239 | 0.964 | 129.28* | 0.01 | 2.79423E+002 | 7.45714E+001 |
| | | 375.00* | 0.00 | 2.25780E+002 | 4.76606E+001 |
| | | 413.70* | 0.00 | 2.58197E+002 | 5.04588E+001 |
| | | 451.50 @ | 0.00 | | |
| AM-241 | 1.000 | 59.54* | 35.70 | 2.12544E+002 | 1.69109E+001 |
| | | 125.28* | 0.00 | 8.57635E+001 | 3.08607E+001 |
| | | 335.40 | 0.00 | | |
| | | 662.42* @ | 0.00 | 1.27862E+003 | 1.65283E+002 |
| | | 722.70 | 0.00 | | |

## INTERFERENCE CORRECTED REPORT

| Nuclide Name | Nuclide Id Confidence | Wt mean Activity (uCi/kg ) | Wt mean Activity Uncertainty |
|---|---|---|---|
| CS-137 | 1.000 | 4.632598E-003 | 7.018445E-004 |
| NP-237 | 0.642 | 8.317445E-003 | 1.965661E-003 |
| Pu-239 @ | 0.964 | 2.478752E+002 | 3.142203E+001 |
| AM-241 @ | 1.000 | 1.832659E+002 | 1.483027E+001 |

? = nuclide is part of an undetermined solution
X = nuclide rejected by the interference analysis
@ = nuclide contains energy lines not used in Weighted Mean Activity

Errors quoted at 1.000 sigma

## NUCLIDE TOTALS

| Nuclide | Mass (g) |
|---|---|
| Pu-239 | 3.36E-002 +/- 4.26E-003 |

**********
***** N U C L I D E M D A R E P O R T *****
**********

| | Nuclide Name | Energy (keV) | Yield (%) | Line MDA (uCi/kg ) | Nuclide MDA (uCi/kg ) | Activity (uCi/kg ) |
|---|---|---|---|---|---|---|
| | CO-60 | 1173.22 | 100.00 | 2.4438E-003 | 2.00E-003 | 1.1798E-004 |
| | | 1332.49 | 100.00 | 2.0021E-003 | | 1.4409E-003 |
| | CS-134 | 475.35 | 1.46 | 1.6124E-001 | 2.41E-003 | 1.7432E-003 |
| | | 563.23 | 8.38 | 2.7392E-002 | | 4.4292E-003 |
| | | 569.32 | 15.43 | 1.4186E-002 | | -3.7949E-003 |
| | | 604.70 | 97.60 | 2.8981E-003 | | -7.5261E-005 |
| | | 795.84 | 85.40 | 2.4067E-003 | | -1.5089E-003 |
| | | 801.93 | 8.73 | 2.4452E-002 | | -3.4733E-003 |
| | | 1038.57 | 1.00 | 2.1308E-001 | | 1.7437E-001 |
| | | 1167.94 | 1.80 | 1.3167E-001 | | 8.9189E-002 |
| | | 1365.15 | 3.04 | 5.4948E-002 | | -1.3567E-002 |
| + | CS-137 | 661.65* | 85.12 | 1.6765E-003 | 1.68E-003 | 5.4077E-003 |
| + | NP-237 | 300.17 | 6.20 | 4.4342E-002 | 6.01E-003 | 2.4234E-002 |
| | | 312.00* | 36.00 | 6.0071E-003 | | 8.3174E-003 |
| | | 340.60 | 4.20 | 6.4349E-002 | | 2.2147E-002 |
| + | Pu-239 | 129.28* | 0.01 | 1.1195E+002 | 1.12E+002 | 2.7942E+002 |
| | | 375.00* | 0.00 | 1.3523E+002 | | 2.2578E+002 |
| | | 413.70* | 0.00 | 1.3850E+002 | | 2.5820E+002 |
| | | 451.50 | 0.00 | 1.2291E+003 | | -4.1687E+002 |
| + | AM-241 | 59.54* | 35.70 | 7.2378E-001 | 7.24E-001 | 2.1254E+002 |
| | | 125.28* | 0.00 | 1.4465E+002 | | 8.5764E+001 |
| | | 335.40 | 0.00 | 5.7956E+002 | | -6.0153E+001 |
| | | 662.42* | 0.00 | 3.9640E+002 | | 1.2786E+003 |
| | | 722.70 | 0.00 | 1.7856E+003 | | -5.8318E+002 |
| | PU-241 | 114.00 | 0.02 | 4.6272E+001 | 4.63E+001 | 6.0530E+001 |
| | | 332.60 | 0.00 | 9.8108E+001 | | 1.0335E+001 |
| | CM-243 | 209.70 | 3.27 | 1.0174E-001 | 1.93E-002 | 7.4474E-002 |
| | | 228.18 | 10.56 | 2.8757E-002 | | 8.1533E-003 |
| | | 277.60 | 14.00 | 1.9306E-002 | | 9.7546E-003 |

+ = Nuclide identified during the nuclide identification
* = Energy line found in the spectrum
> = MDA value not calculated
@ = Half-life too short to be able to perform the decay correction

# Bldg 233s
## NDA Item Description Sheet
## ~~Box~~ Geometry
RETANGLAR

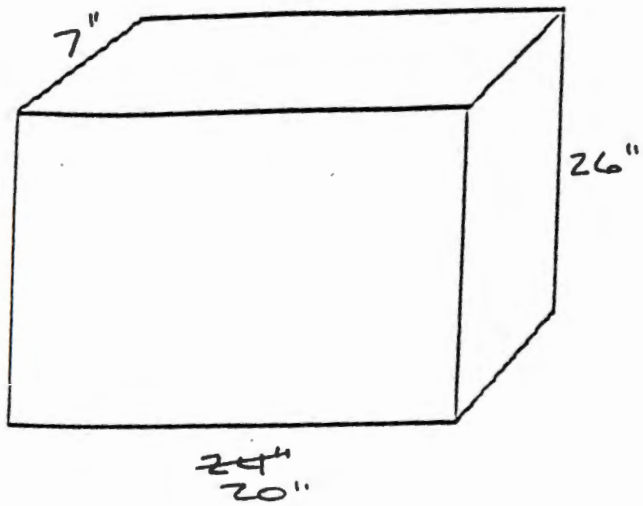


Put Dimensions on Box

Item ID: 30666

Weight (kg): 19 Lbs 8.63

Material Description: PANEL DOOR, RAGS TAPE GLOVE BAG - NOMETAL PLASTIC

Packaging: 3 + LAYERS POLY

Detector Distance (in): 24"

Detector Filters: NONE

Dose Rate: <.5

Comments: BAG - GLOVE BAG. SIDE A ~~900SEC~~ 1800 999
SIDE B ~~900SEC~~ 1800 1000

WW 12-6-01

**233-S Item Analysis** Spreadsheet Version 3.0b 1/14/02

**Sample Info:**

| | | | |
|---|---|---|---|
| **Item ID:** | 3066 | **Assay Date:** | 6-Dec-01 |
| **File Name:** | 1000 | **File Name:** | 999 |

**Data Input:**

| Isotope | Activity (uCi/kg) | Meas Uncert | Activity (uCi/kg) | Meas Uncert |
|---|---|---|---|---|
| Pu-239 (129) | 1.72E+01 | 5.46E+00 | 2.75E+01 | 6.66E+00 |
| Pu-239 (414) | | | | |
| Am-241 | 4.27E+00 | 3.75E-01 | 4.57E+00 | 3.79E-01 |
| Np-237 | | | | |
| U-238 | | | | |
| U-235 | | | | |
| Cs-137 | 1.83E-03 | 2.25E-04 | 1.90E-03 | 2.26E-04 |
| Co-60 | | | | |

**Item Parameters:**

Contamination: Internal and External Item Type: Bag Calcs: Average

**Dimensions:**

| | | | | | |
|---|---|---|---|---|---|
| Length (in): | 26 | Width (in): | 20 | Depth (in): | 7 |
| Weight (lbs): | 19 | Depth for TMU (in): | 4 | % Volume: | 100 |

**Am-241 Calcs:**

| | | | | |
|---|---|---|---|---|
| Measured | 4.42E+00 | +/- | 4.95E+00 | Calc from Pu-239 |
| Calculated | 3.09E+01 | +/- | 3.84E+01 | |

**Nuclide Activities:**

| Isotope | Activity (nCi/g) | | Total Unc 1 sigma |
|---|---|---|---|
| Pu-238 | 9.06E+00 | +/- | 4.41E+00 |
| Pu-239 | 2.24E+01 | +/- | 1.09E+01 |
| Pu-240 | 1.16E+01 | +/- | 5.68E+00 |
| Pu-241 | 4.35E+01 | +/- | 2.12E+01 |
| Pu-242 | 1.18E-02 | +/- | 5.73E-03 |
| Am-241 | 3.09E+01 | +/- | 3.84E+01 |
| Np-237 | 0.00E+00 | +/- | 0.00E+00 |
| U-238 | 0.00E+00 | +/- | 0.00E+00 |
| U-235 | 0.00E+00 | +/- | 0.00E+00 |
| Cs-137 | 1.86E-03 | +/- | 4.46E-04 |
| Co-60 | 0.00E+00 | +/- | 0.00E+00 |

**Results:**

| | | | | | |
|---|---|---|---|---|---|
| **Total TRU Activity(nCi/g):** | | 7.40E+01 | +/- | 4.06E+01 | Calc from Pu-239 Act |
| **Pu (g):** | 3.59E-03 | **Pu (g) + 3 sigma TMU:** | | 8.85E-03 | |
| | | **Pu(g) + 3 sigma:** | | 5.67E-03 | |

**Comments:** Errors:

**Analyst:** Martin Winterrose **Date:** 2/6/02

```
#Date & Time: Thu Dec 06 13:36:13 2001
~g=RECTANGULAR_PLANE
~description=3066_GLOVE_BAG
~comment=PLASTIC,_RAGS,_TAPE,_DIRT
~Ccollimator=50MM-180D
~crpn=4
~Detector=7219
~Convergence in %=1            ~MDRPN=4
~Lunit=IN  ~Tunit=C  ~Dunit=G/CU.C    ~Punit=MM.HG
~at=20        ~ap=760       ~rh=50
~Energies kev=   50.000,  100.000,  128.000,  130.000,  150.000,  200.000,#
                300.000,  500.000,  700.000, 1000.000, 1400.000, 2000.000,#
               4000.000,
~Error in %=     10.000,   10.000,   10.000,   10.000,   10.000,    8.000,#
                  8.000,    6.000,    6.000,    4.000,    4.000,    4.000,#
                  4.000,
~d1.1=7         ~d1.2=20        ~d1.3=26        ~1mater=POLYPROP ~1den=0.91
~d2.1=0.024     ~2mater=DRYDIRT  ~2den=1.6       ~2con=0.25
~d3.1=2.3       ~3mater=TYPMIX   ~3den=0.3
~d4.1=0.024     ~4mater=DRYDIRT  ~4den=1.6       ~4con=0.25
~d5.1=2.3       ~5mater=TYPMIX   ~5den=0.3
~d6.1=0.024     ~6mater=DRYDIRT  ~6den=1.6       ~6con=0.25
~d7.1=2.3       ~7mater=TYPMIX   ~7den=0.3
~d8.1=0.024     ~8mater=DRYDIRT  ~8den=1.6       ~8con=0.25
~sd1=24
```

## C A N B E R R A  I S O C S  A N A L Y S I S

Report Generated On : 12/06/01 3:10:29 PM

Sample Title : 3066 Side B
Spectrum Description :
Sample Identification : 1000
Sample Size : 8.6 kg

Sample Taken On : 12/06/01 2:55:00 PM
Acquisition Started : 12/06/01 2:55:21 PM

Live Time: 1800.0 seconds Real Time: 1805.9 seconds

ISOCS Calabration : 3066 GLOVE_BA
Energy Calibration Used Done On : 11/29/01
Efficiency Calibration Used Done On : 12/06/01

## P E A K  A N A L Y S I S  R E P O R T

| Peak No. | Peak centroid | Energy (keV) | Net Peak Area | Net Area Uncert. | Continuum Counts |
|---|---|---|---|---|---|
| 1 | 209.25 | 52.34 | 4.95E+002 | 158.40 | 4.30E+003 |
| 2 | 239.13 | 59.82 | 1.12E+005 | 2950.78 | 2.84E+003 |
| 3 | 340.62 | 85.19 | 8.85E+002 | 56.37 | 2.40E+003 |
| 4 | 350.66 | 87.70 | 3.52E+002 | 54.12 | 2.42E+003 |
| 5 | 378.92 | 94.77 | 2.09E+002 | 47.85 | 2.42E+003 |
| 6 | 396.26 | 99.10 | 3.11E+002 | 49.98 | 2.40E+003 |
| 7 | 414.19 | 103.59 | 1.81E+002 | 47.31 | 2.37E+003 |
| 8 | 518.54 | 129.68 | 1.60E+002 | 42.73 | 1.94E+003 |
| 9 | 1501.40 | 375.44 | 3.18E+001 | 10.89 | 9.49E+001 |
| 10 | 2043.25 | 510.92 | 1.17E+002 | 13.46 | 5.38E+001 |
| 11 | 2436.71 | 609.30 | 7.21E+001 | 11.15 | 4.34E+001 |
| 12 | 2646.65 | 661.80 | 1.06E+002 | 12.59 | 3.53E+001 |
| 13 | 3644.42 | 911.28 | 5.73E+001 | 9.42 | 1.71E+001 |
| 14 | 7061.53 | 1765.71 | 2.48E+001 | 6.33 | 1.92E+000 |

## N U C L I D E  I D E N T I F I C A T I O N  R E P O R T

| Nuclide Name | Id Confidence | Energy (keV) | Yield (%) | Activity (uCi) | Activity Uncertainty |
|---|---|---|---|---|---|
| CS-137 | 0.999 | 661.65* | 85.12 | 1.82967E-003 | 2.25189E-004 |
| Pu-239 | 0.754 | 129.28* | 0.01 | 1.72906E+001 | 5.46616E+000 |
| | | 375.00* | 0.00 | 2.09196E+001 | 7.33451E+000 |
| | | 413.70 | 0.00 | | |
| | | 451.50 @ | 0.00 | | |
| AM-241 | 0.997 | 59.54* | 35.70 | 4.27346E+000 | 3.57831E-001 |
| | | 125.28 | 0.00 | | |
| | | 335.40 | 0.00 | | |
| | | 662.42* @ | 0.00 | 4.32615E+002 | 5.32318E+001 |
| | | 722.70 | 0.00 | | |

## I N T E R F E R E N C E  C O R R E C T E D  R E P O R T

| Nuclide Name | Nuclide Id Confidence | Wt mean Activity (uCi/kg ) | Wt mean Activity Uncertainty |
|---|---|---|---|
| CS-137 | 0.999 | 1.811594E-003 | 2.251395E-004 |
| Pu-239 @ | 0.754 | 1.858647E+001 | 4.382867E+000 |
| AM-241 @ | 0.997 | 4.273458E+000 | 3.578315E-001 |

? = nuclide is part of an undetermined solution
X = nuclide rejected by the interference analysis
@ = nuclide contains energy lines not used in Weighted Mean Activity

Errors quoted at 1.000 sigma

**********
***** N U C L I D E  M D A  R E P O R T *****
**********

| | Nuclide Name | Energy (keV) | Yield (%) | Line MDA (uCi/kg ) | Nuclide MDA (uCi/kg ) | Activity (uCi/kg ) |
|---|---|---|---|---|---|---|
| | CO-60 | 1173.22 | 100.00 | 9.9395E-004 | 8.45E-004 | 3.3834E-004 |
| | | 1332.49 | 100.00 | 8.4529E-004 | | 4.1696E-004 |
| | CS-134 | 475.35 | 1.46 | 5.9543E-002 | 9.34E-004 | -6.2163E-003 |
| | | 563.23 | 8.38 | 9.2578E-003 | | -4.4558E-003 |
| | | 569.32 | 15.43 | 5.4841E-003 | | -8.0556E-005 |
| | | 604.70 | 97.60 | 1.0326E-003 | | -2.6145E-004 |
| | | 795.84 | 85.40 | 9.3365E-004 | | -5.8677E-004 |
| | | 801.93 | 8.73 | 9.8617E-003 | | 1.6730E-004 |
| | | 1038.57 | 1.00 | 8.6734E-002 | | -4.7609E-002 |
| | | 1167.94 | 1.80 | 5.3401E-002 | | 4.6063E-003 |
| | | 1365.15 | 3.04 | 2.8223E-002 | | -8.4022E-003 |
| + | CS-137 | 661.65* | 85.12 | 5.2487E-004 | 5.25E-004 | 1.8297E-003 |
| | NP-237 | 300.17 | 6.20 | 1.4195E-002 | 2.29E-003 | -5.0270E-003 |
| | | 312.00 | 36.00 | 2.2940E-003 | | -4.1322E-004 |
| | | 340.60 | 4.20 | 2.2597E-002 | | 1.4558E-002 |
| | | 375.45 | 0.68 | 1.3219E-001 | | 1.9325E-002 |
| | | 415.76 | 1.75 | 5.2785E-002 | | 2.1521E-002 |
| + | Pu-239 | 129.28* | 0.01 | 2.2496E+001 | 2.25E+001 | 1.7291E+001 |
| | | 375.00* | 0.00 | 3.1556E+001 | | 2.0920E+001 |
| | | 413.70 | 0.00 | 6.0715E+001 | | 1.2487E+001 |
| | | 451.50 | 0.00 | 4.2692E+002 | | -6.1666E+001 |
| + | AM-241 | 59.54* | 35.70 | 9.5656E-003 | 9.57E-003 | 4.2735E+000 |
| | | 125.28 | 0.00 | 6.0917E+001 | | 2.3757E+001 |
| | | 335.40 | 0.00 | 1.7932E+002 | | -1.8804E+002 |
| | | 662.42* | 0.00 | 1.2410E+002 | | 4.3261E+002 |
| | | 722.70 | 0.00 | 6.5053E+002 | | 6.4232E+002 |
| | PU-241 | 114.00 | 0.02 | 1.1429E+001 | 1.14E+001 | 8.6243E+000 |
| | | 332.60 | 0.00 | 3.1259E+001 | | 2.4166E+001 |
| | CM-243 | 209.70 | 3.27 | 3.2502E-002 | 6.18E-003 | 1.7760E-002 |
| | | 228.18 | 10.56 | 9.4047E-003 | | 4.0148E-004 |
| | | 277.60 | 14.00 | 6.1774E-003 | | -6.4896E-004 |

+ = Nuclide identified during the nuclide identification
* = Energy line found in the spectrum
> = MDA value not calculated
@ = Half-life too short to be able to perform the decay correction

N U C L I D E  T O T A L S

| Nuclide | Mass (g) |
|---|---|
| Pu-239 | 2.59E-003 +/- 6.10E-004 |

# Bldg 233s
# NDA Item Description Sheet
# ~~Box~~ Geometry

RECTANGULAR PLANE

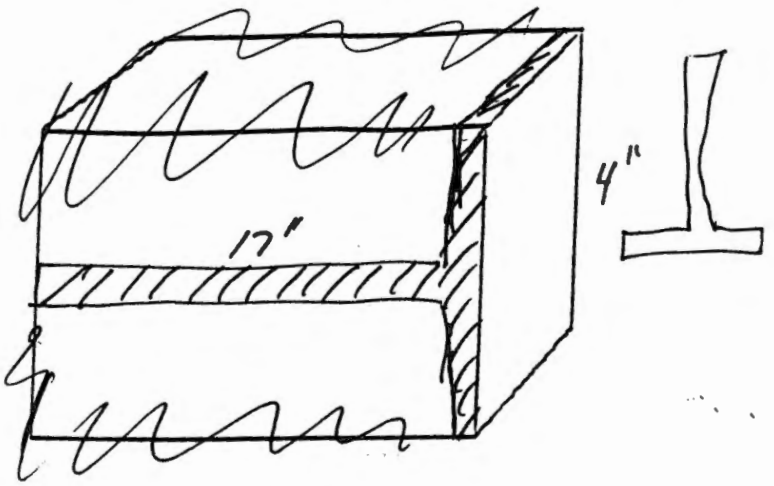


Put Dimensions on Box

Item ID: 4530

Weight (kg): 11.3 LBS 5.13 Kg

Material Description: 1/4" ANGLE IRON

Packaging: 3 LAYERS OF POLY

Detector Distance (in): 24

Detector Filters: NONE

Dose Rate: <.5

Comments: 1ST COUNT 1800 SEC ROTATED 1021
2ND COUNT 900 SEC NR 1022
1800 SEC ACBC 1023

**233-S Item Analysis** Spreadsheet Version 3.0b 01/14/2002

**Sample Info:**

| | | | |
|---|---|---|---|
| **Item ID:** | 4530 | **Assay Date:** | 13-Dec-01 |
| **File Name:** | 1023 | **File Name:** | |

**Data Input:**

| Isotope | Activity (uCi/kg) | Meas Uncert | Activity (uCi/kg) | Meas Uncert |
|---|---|---|---|---|
| Pu-239 (129) | | | | |
| Pu-239 (414) | 3.03E+01 | 9.85E+00 | | |
| Am-241 | 5.93E+00 | 4.92E-01 | | |
| Np-237 | 4.26E-03 | 5.60E-04 | | |
| U-238 | 8.36E-02 | 2.73E-02 | | |
| U-235 | | | | |
| Cs-137 | 1.94E-03 | 2.65E-04 | | |
| Co-60 | | | | |

**Item Parameters:**

| | | | | | |
|---|---|---|---|---|---|
| Contamination: | Surface only | Item Type: | Box | Calcs: | Use 1st |

**Dimensions:**

| | | | | | |
|---|---|---|---|---|---|
| Length (in): | 17 | Width (in): | 4 | Depth (in): | 0.25 |
| Weight (lbs): | 11.3 | Depth for TMU (in): | 4 | % Volume: | 100 |

**Am-241 Calcs:**

| | | | | |
|---|---|---|---|---|
| Measured | 5.93E+00 | +/- | 1.56E+00 | Use Meas |
| Calculated | 4.19E+01 | +/- | 3.75E+01 | |

**Nuclide Activities:**

| Isotope | Activity (nCi/g) | | Total Unc 1 sigma |
|---|---|---|---|
| Pu-238 | 1.23E+01 | +/- | 4.18E+00 |
| Pu-239 | 3.03E+01 | +/- | 1.03E+01 |
| Pu-240 | 1.58E+01 | +/- | 5.38E+00 |
| Pu-241 | 5.90E+01 | +/- | 2.01E+01 |
| Pu-242 | 1.59E-02 | +/- | 5.43E-03 |
| Am-241 | 5.93E+00 | +/- | 1.56E+00 |
| Np-237 | 4.26E-03 | +/- | 7.04E-04 |
| U-238 | 8.36E-02 | +/- | 2.85E-02 |
| U-235 | 0.00E+00 | +/- | 0.00E+00 |
| Cs-137 | 1.94E-03 | +/- | 3.28E-04 |
| Co-60 | 0.00E+00 | +/- | 0.00E+00 |

**Results:**

| | | | | |
|---|---|---|---|---|
| **Total TRU Activity(nCi/g):** | 6.43E+01 | +/- | 1.25E+01 | Calc from Pu-239 Act |
| **Pu (g):** | 2.90E-03 | **Pu (g) + 3 sigma TMU:** | 5.86E-03 | |
| | | **Pu(g) + 3 sigma:** | 5.72E-03 | |

**Comments:**

Density error due to geometry selection.

Errors:Density > 1,

**Analyst:** Martin Winterrose **Date:** 02/11/2002

```
#Date & Time: Mon Feb 11 10:39:31 2002
~g=RECTANGULAR_PLANE
~description=4530_PLATE
~comment=STEEL_PLATE
~Ccollimator=50MM-180D
~crpn=4
~Detector=7219
~Convergence in %=1            ~MDRPN=4
~Lunit=IN  ~Tunit=C  ~Dunit=G/CU.C    ~Punit=MM.HG
~at=20        ~ap=760       ~rh=50
~Energies kev=   50.000,  100.000,  128.000,  130.000,  150.000,  200.000,#
                300.000,  500.000,  700.000, 1000.000, 1400.000, 2000.000,#
               4000.000,
~Error in %=     10.000,   10.000,   10.000,   10.000,   10.000,    8.000,#
                  8.000,    6.000,    6.000,    4.000,    4.000,    4.000,#
                  4.000,
~d1.1=0.024     ~d1.2=17        ~d1.3=4         ~1mater=POLYPROP ~1den=0.91
~d2.1=0.025     ~2mater=DRYDIRT  ~2den=1.6       ~2con=0.5
~d3.1=0.25      ~3mater=304SS    ~3den=7.81
~d4.1=0.025     ~4mater=DRYDIRT  ~4den=1.6       ~4con=0.5
~sd1=24
```

## C A N B E R R A  I S O C S  A N A L Y S I S

Report Generated On : 2/11/02 10:41:31 AM

Sample Title : 4530 Side A & B combined
Spectrum Description :
Sample Identification : 1023
Sample Size : 5.1 kg

Sample Taken On : 12/13/01 10:27:00 AM
Acquisition Started : 12/13/01 10:27:53 AM

Live Time: 1800.0 seconds Real Time: 1806.0 seconds

ISOCS Calabration : 4530 PLATE
Energy Calibration Used Done On : 11/29/01
Efficiency Calibration Used Done On : 2/11/02

## P E A K  A N A L Y S I S  R E P O R T

| Peak No. | Peak centroid | Energy (keV) | Net Peak Area | Net Area Uncert. | Continuum Counts |
|---|---|---|---|---|---|
| 1 | 198.12 | 49.56 | 3.77E+002 | 104.45 | 4.63E+003 |
| 2 | 239.18 | 59.83 | 1.28E+005 | 3014.46 | 2.84E+003 |
| 3 | 340.07 | 85.06 | 8.25E+002 | 59.59 | 2.58E+003 |
| 4 | 351.22 | 87.84 | 1.70E+002 | 54.73 | 2.61E+003 |
| 5 | 396.05 | 99.05 | 3.62E+002 | 52.26 | 2.64E+003 |
| 6 | 432.50 | 108.17 | 1.73E+002 | 50.81 | 2.59E+003 |
| 7 | 518.03 | 129.55 | 1.86E+002 | 45.41 | 2.20E+003 |
| 8 | 1201.13 | 300.36 | 3.96E+001 | 13.13 | 1.55E+002 |
| 9 | 1248.12 | 312.11 | 1.35E+002 | 16.57 | 1.35E+002 |
| 10 | 1652.73 | 413.28 | 3.44E+001 | 10.86 | 8.83E+001 |
| 11 | 2044.36 | 511.20 | 1.66E+002 | 15.30 | 6.20E+001 |
| 12 | 2437.59 | 609.53 | 9.74E+001 | 12.42 | 4.60E+001 |
| 13 | 2646.06 | 661.65 | 9.23E+001 | 12.28 | 4.64E+001 |
| 14 | 4004.25 | 1001.26 | 2.12E+001 | 6.90 | 2.30E+001 |
| 15 | 7062.83 | 1766.04 | 2.97E+001 | 6.64 | 4.49E-001 |

## N U C L I D E  I D E N T I F I C A T I O N  R E P O R T

| Nuclide Name | Id Confidence | Energy (keV) | Yield (%) | Activity (uCi) | Activity Uncertainty |
|---|---|---|---|---|---|
| CS-137 | 1.000 | 661.65* | 85.12 | 1.93841E-003 | 2.65059E-004 |
| PA-234M | 0.998 | 1001.03* | 0.59 | 8.36038E-002 | 2.72890E-002 |
| NP-237 | 0.790 | 300.17* | 6.20 | 7.09732E-003 | 2.37494E-003 |
| | | 312.00* | 36.00 | 4.25968E-003 | 5.59564E-004 |
| | | 340.60 | 4.20 | | |
| | | 375.00 | 0.68 | | |
| | | 415.60 | 1.75 | | |
| Pu-239 | 0.730 | 129.28* | 0.01 | 2.71452E+001 | 8.04341E+000 |
| | | 375.00 | 0.00 | | |
| | | 413.70* | 0.00 | 3.03031E+001 | 9.85088E+000 |
| | | 451.50 @ | 0.00 | | |
| AM-241 | 0.996 | 59.54* | 35.70 | 5.93270E+000 | 4.91807E-001 |
| | | 125.28 | 0.00 | | |
| | | 335.40 | 0.00 | | |
| | | 662.42* @ | 0.00 | 4.58325E+002 | 6.26595E+001 |
| | | 722.70 | 0.00 | | |

## I N T E R F E R E N C E  C O R R E C T E D  R E P O R T

| Nuclide Name | Nuclide Id Confidence | Wt mean Activity (uCi/kg ) | Wt mean Activity Uncertainty |
|---|---|---|---|
| CS-137 | 1.000 | 1.913315E-003 | 2.650153E-004 |
| PA-234M | 0.998 | 8.360376E-002 | 2.728900E-002 |
| NP-237 | 0.790 | 4.408918E-003 | 5.446508E-004 |
| Pu-239 @ | 0.730 | 2.840843E+001 | 6.230335E+000 |
| AM-241 @ | 0.996 | 5.932702E+000 | 4.918070E-001 |

? = nuclide is part of an undetermined solution
X = nuclide rejected by the interference analysis
@ = nuclide contains energy lines not used in Weighted Mean Activity

Errors quoted at 1.000 sigma

**********
***** N U C L I D E  M D A  R E P O R T *****
**********

| | Nuclide Name | Energy (keV) | Yield (%) | Line MDA (uCi/kg ) | Nuclide MDA (uCi/kg ) | Activity (uCi/kg ) |
|---|---|---|---|---|---|---|
| | CO-60 | 1173.22 | 100.00 | 1.1502E-003 | 9.98E-004 | 5.5709E-004 |
| | | 1332.49 | 100.00 | 9.9816E-004 | | -7.5981E-005 |
| | CS-134 | 475.35 | 1.46 | 6.8665E-002 | 1.28E-003 | -8.4960E-002 |
| | | 563.23 | 8.38 | 1.2836E-002 | | 5.9308E-003 |
| | | 569.32 | 15.43 | 6.9112E-003 | | -3.8836E-003 |
| | | 604.70 | 97.60 | 1.3369E-003 | | -2.3759E-004 |
| | | 795.84 | 85.40 | 1.2836E-003 | | -5.7058E-005 |
| | | 801.93 | 8.73 | 1.1661E-002 | | -1.3487E-002 |
| | | 1038.57 | 1.00 | 1.0720E-001 | | 4.4818E-002 |
| | | 1167.94 | 1.80 | 6.0728E-002 | | 2.0386E-002 |
| | | 1365.15 | 3.04 | 3.2104E-002 | | -4.0688E-002 |
| + | CS-137 | 661.65* | 85.12 | 7.2222E-004 | 7.22E-004 | 1.9384E-003 |
| + | NP-237 | 300.17* | 6.20 | 1.0866E-002 | 1.79E-003 | 7.0973E-003 |
| | | 312.00* | 36.00 | 1.7874E-003 | | 4.2597E-003 |
| | | 340.60 | 4.20 | 2.8584E-002 | | 2.6196E-002 |
| | | 375.00 | 0.68 | 1.6613E-001 | | 3.6206E-002 |
| | | 415.60 | 1.75 | 6.5317E-002 | | 3.5834E-002 |
| + | Pu-239 | 129.28* | 0.01 | 3.2266E+001 | 3.23E+001 | 2.7145E+001 |
| | | 375.00 | 0.00 | 7.1393E+001 | | 1.5559E+001 |
| | | 413.70* | 0.00 | 4.0896E+001 | | 3.0303E+001 |
| | | 451.50 | 0.00 | 5.6764E+002 | | -1.4923E+002 |
| + | AM-241 | 59.54* | 35.70 | 1.1631E-002 | 1.16E-002 | 5.9327E+000 |
| | | 125.28 | 0.00 | 8.8112E+001 | | 6.7973E+001 |
| | | 335.40 | 0.00 | 2.2250E+002 | | 4.5505E+000 |
| | | 662.42* | 0.00 | 1.7076E+002 | | 4.5833E+002 |
| | | 722.70 | 0.00 | 9.0623E+002 | | 6.4173E+002 |
| | PU-241 | 114.00 | 0.02 | 1.6475E+001 | 1.65E+001 | 1.5977E+001 |
| | | 332.60 | 0.00 | 3.6928E+001 | | -3.3599E+001 |
| | CM-243 | 209.70 | 3.27 | 4.3272E-002 | 8.10E-003 | -3.5017E-003 |
| | | 228.18 | 10.56 | 1.2866E-002 | | 3.5599E-003 |
| | | 277.60 | 14.00 | 8.0963E-003 | | -5.3837E-003 |

+ = Nuclide identified during the nuclide identification
* = Energy line found in the spectrum
> = MDA value not calculated
@ = Half-life too short to be able to perform the decay correction

N U C L I D E  T O T A L S

| Nuclide | Mass (g) |
|---|---|
| Pu-239 | 2.35E-003 +/- 5.15E-004 |

**Bldg 233s**
**NDA Item Description Sheet**
**~~Box~~ Geometry**
RECTANGULAR PLANE

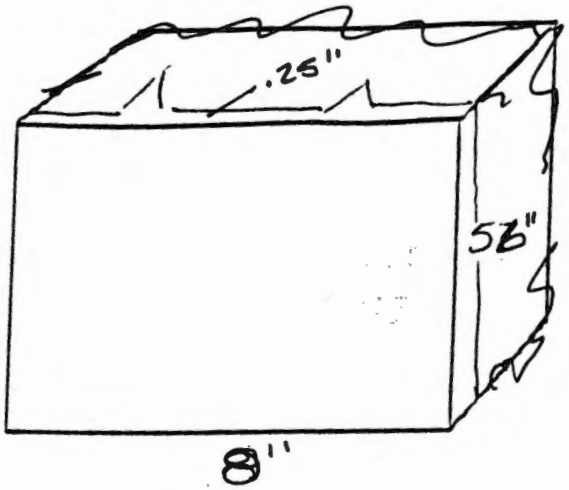


Put Dimensions on Box

Item ID: 4929

Weight (kg): 83 Lbs 39.72

Material Description: C CHANNEL 1/4 THICK

Packaging: BLANKET + PADDING

Detector Distance (in): 48"

Detector Filters: NONE

Dose Rate: 1/.5

Comments: DET @ 48" SIDE A 900SEL 1026
SIDE B 900SEL 1027

**233-S Item Analysis** Spreadsheet Version 3.0b 1/14/02

**Sample Info:**

| | | | |
|---|---|---|---|
| **Item ID:** | 4929 | **Assay Date:** | 17-Dec-01 |
| **File Name:** | 1026 | **File Name:** | 1027 |

**Data Input:**

| Isotope | Activity (uCi/kg) | Meas Uncert | Activity (uCi/kg) | Meas Uncert |
|---|---|---|---|---|
| Pu-239 (129) | | | | |
| Pu-239 (414) | 1.50E+02 | 1.86E+01 | 1.62E+02 | 1.95E+01 |
| Am-241 | 3.40E+01 | 2.84E+00 | 2.86E+01 | 2.41E+00 |
| Np-237 | 1.28E-02 | 9.02E-04 | 1.18E-02 | 8.89E-04 |
| U-238 | | | | |
| U-235 | | | | |
| Cs-137 | 6.45E-04 | 1.87E-04 | 1.17E-03 | 2.25E-04 |
| Co-60 | | | | |

**Item Parameters:**

Contamination: Surface only Item Type: Box Calcs: Sum

**Dimensions:**

| | | | | | |
|---|---|---|---|---|---|
| Length (in): | 56 | Width (in): | 8 | Depth (in): | 0.25 |
| Weight (lbs): | 83 | Depth for TMU (in): | 4 | % Volume: | 100 |

**Am-241 Calcs:**

| | | | | |
|---|---|---|---|---|
| Measured | 6.26E+01 | +/- | 1.61E+01 | Use Meas |
| Calculated | 4.32E+02 | +/- | 1.93E+02 | |

**Nuclide Activities:**

| Isotope | Activity (nCi/g) | | Total Unc 1 sigma |
|---|---|---|---|
| Pu-238 | 1.26E+02 | +/- | 1.69E+01 |
| Pu-239 | 3.12E+02 | +/- | 4.17E+01 |
| Pu-240 | 1.63E+02 | +/- | 2.17E+01 |
| Pu-241 | 6.08E+02 | +/- | 8.12E+01 |
| Pu-242 | 1.64E-01 | +/- | 2.19E-02 |
| Am-241 | 6.26E+01 | +/- | 1.61E+01 |
| Np-237 | 2.46E-02 | +/- | 2.77E-03 |
| U-238 | 0.00E+00 | +/- | 0.00E+00 |
| U-235 | 0.00E+00 | +/- | 0.00E+00 |
| Cs-137 | 1.82E-03 | +/- | 3.44E-04 |
| Co-60 | 0.00E+00 | +/- | 0.00E+00 |

**Results:**

| | | | | | |
|---|---|---|---|---|---|
| **Total TRU Activity(nCi/g):** | | 6.64E+02 | +/- | 5.25E+01 | Calc from Pu-239 Act |
| **Pu (g):** | 2.19E-01 | **Pu (g) + 3 sigma TMU:** | | 3.07E-01 | |
| | | **Pu(g) + 3 sigma:** | | 2.76E-01 | |

**Comments:** Density error due to weight vers thickness ratio. Solid stainless steel. Errors:Density > 1,

**Analyst:** Martin Winterrose **Date:** 2/4/02

```
#Date & Time: Mon Dec 17 09:59:35 2001
~g=RECTANGULAR_PLANE
~description=4929_C_CHANNEL
~comment=8"_CHANNEL
~Ccollimator=50MM-180D
~crpn=4
~Detector=7219
~Convergence in %=1            ~MDRPN=4
~Lunit=IN   ~Tunit=C   ~Dunit=G/CU.C    ~Punit=MM.HG
~at=20        ~ap=760        ~rh=50
~Energies kev=   50.000,  100.000,  128.000,  130.000,  150.000,  200.000,#
                300.000,  500.000,  700.000, 1000.000, 1400.000, 2000.000,#
               4000.000,
~Error in %=     10.000,   10.000,   10.000,   10.000,   10.000,    8.000,#
                  8.000,    6.000,    6.000,    4.000,    4.000,    4.000,#
                  4.000,
~d1.1=0.024     ~d1.2=56        ~d1.3=8         ~1mater=POLYPROP ~1den=0.91
~d2.1=0.25      ~2mater=CELLULOS ~2den=0.45
~d3.1=0.024     ~3mater=DRYDIRT  ~3den=1.6       ~3con=1
~d4.1=0.25      ~4mater=304SS    ~4den=7.81
~d5.1=0.024     ~5mater=DRYDIRT  ~5den=1.6       ~5con=1
~d6.1=0.25      ~6mater=CELLULOS ~6den=0.45
~d7.1=0.024     ~7mater=POLYPROP ~7den=0.91
~sd1=48
```

## C A N B E R R A  I S O C S  A N A L Y S I S

Report Generated On : 12/17/01 10:17:29 AM

Sample Title : 4929 Side A
Spectrum Description :
Sample Identification : 1026
Sample Size : 37.7 kg

Sample Taken On : 12/17/01 10:01:00 AM
Acquisition Started : 12/17/01 10:02:02 AM

Live Time: 900.0 seconds Real Time: 919.8 seconds

ISOCS Calabration : 4929 C CHANNE
Energy Calibration Used Done On : 11/29/01
Efficiency Calibration Used Done On : 12/17/01

## P E A K  A N A L Y S I S  R E P O R T

| Peak No. | Peak centroid | Energy (keV) | Net Peak Area | Net Area Uncert. | Continuum Counts |
|---|---|---|---|---|---|
| 1 | 239.18 | 59.83 | 5.90E+005 | 15042.9 | 7.03E+003 |
| 2 | 300.85 | 75.25 | 1.36E+003 | 66.62 | 2.30E+003 |
| 3 | 339.95 | 85.02 | 4.99E+002 | 52.12 | 2.26E+003 |
| 4 | 396.11 | 99.07 | 1.41E+003 | 58.98 | 1.99E+003 |
| 5 | 413.22 | 103.35 | 6.17E+002 | 49.16 | 1.90E+003 |
| 6 | 445.27 | 111.36 | 2.15E+002 | 40.05 | 1.74E+003 |
| 7 | 518.54 | 129.68 | 6.76E+002 | 46.87 | 1.34E+003 |
| 8 | 833.75 | 208.50 | 2.10E+002 | 20.35 | 2.48E+002 |
| 9 | 1201.58 | 300.47 | 7.07E+001 | 12.76 | 9.25E+001 |
| 10 | 1248.54 | 312.21 | 3.45E+002 | 21.25 | 7.77E+001 |
| 11 | 1331.77 | 333.02 | 5.29E+001 | 11.84 | 6.72E+001 |
| 12 | 1342.89 | 335.80 | 3.67E+001 | 11.67 | 6.68E+001 |
| 13 | 1363.08 | 340.85 | 3.43E+001 | 12.40 | 6.55E+001 |
| 14 | 1379.72 | 345.01 | 4.34E+001 | 11.19 | 6.05E+001 |
| 15 | 1500.67 | 375.25 | 1.52E+002 | 14.86 | 5.32E+001 |
| 16 | 1655.54 | 413.98 | 1.47E+002 | 14.16 | 4.38E+001 |
| 17 | 2043.25 | 510.92 | 7.53E+001 | 10.54 | 3.10E+001 |
| 18 | 2647.22 | 661.94 | 3.26E+001 | 7.67 | 1.44E+001 |
| 19 | 7063.60 | 1766.23 | 2.19E+001 | 5.61 | 4.14E-002 |

## NUCLIDE IDENTIFICATION REPORT

| Nuclide Name | Id Confidence | Energy (keV) | Yield (%) | Activity (uCi) | Activity Uncertainty |
|---|---|---|---|---|---|
| CS-137 | 0.997 | 661.65* | 85.12 | 7.91658E-004 | 1.87610E-004 |
| NP-237 | 0.993 | 300.17* | 6.20 | 1.47288E-002 | 2.74974E-003 |
| | | 312.00* | 36.00 | 1.26266E-002 | 9.84144E-004 |
| | | 340.60* | 4.20 | 1.12899E-002 | 4.11096E-003 |
| | | 375.45* | 0.68 | 3.27401E-001 | 3.50374E-002 |
| | | 415.76* | 1.75 | 1.30346E-001 | 1.36495E-002 |
| Pu-239 | 0.968 | 129.28* | 0.01 | 1.16267E+002 | 2.11219E+001 |
| | | 375.00* | 0.00 | 1.40700E+002 | 1.74922E+001 |
| | | 413.70* | 0.00 | 1.50631E+002 | 1.86632E+001 |
| | | 451.50 @ | 0.00 | | |
| AM-241 | 0.996 | 59.54* | 35.70 | 3.40479E+001 | 2.84190E+000 |
| | | 125.28 | 0.00 | | |
| | | 335.40* | 0.00 | 1.01407E+002 | 3.26408E+001 |
| | | 662.42* @ | 0.00 | 1.87183E+002 | 4.43566E+001 |
| | | 722.70 | 0.00 | | |

## INTERFERENCE CORRECTED REPORT

| Nuclide Name | Nuclide Id Confidence | Wt mean Activity (uCi/kg ) | Wt mean Activity Uncertainty |
|---|---|---|---|
| CS-137 | 0.997 | 6.455146E-004 | 1.879800E-004 |
| NP-237 | 0.993 | 1.284704E-002 | 9.024615E-004 |
| Pu-239 @ | 0.968 | 1.247795E+002 | 7.258305E+000 |
| AM-241 @ | 0.996 | 3.455471E+001 | 2.831193E+000 |

? = nuclide is part of an undetermined solution
X = nuclide rejected by the interference analysis
@ = nuclide contains energy lines not used in Weighted Mean Activity

Errors quoted at 1.000 sigma

**********
***** N U C L I D E  M D A  R E P O R T *****
**********

| | Nuclide Name | Energy (keV) | Yield (%) | Line MDA (uCi/kg ) | Nuclide MDA (uCi/kg ) | Activity (uCi/kg ) |
|---|---|---|---|---|---|---|
| | CO-60 | 1173.22 | 100.00 | 9.5648E-004 | 8.97E-004 | -5.9828E-004 |
| | | 1332.49 | 100.00 | 8.9715E-004 | | 9.7204E-004 |
| | CS-134 | 475.35 | 1.46 | 6.3739E-002 | 1.05E-003 | -3.1329E-002 |
| | | 563.23 | 8.38 | 9.7625E-003 | | -2.1675E-003 |
| | | 569.32 | 15.43 | 5.5881E-003 | | 1.5106E-003 |
| | | 604.70 | 97.60 | 1.0522E-003 | | -5.0638E-004 |
| | | 795.84 | 85.40 | 1.0488E-003 | | -1.1216E-003 |
| | | 801.93 | 8.73 | 1.1368E-002 | | 2.2037E-003 |
| | | 1038.57 | 1.00 | 9.9132E-002 | | 4.6890E-002 |
| | | 1167.94 | 1.80 | 5.4705E-002 | | -2.6424E-002 |
| | | 1365.15 | 3.04 | 2.7651E-002 | | 9.8985E-003 |
| + | CS-137 | 661.65* | 85.12 | 4.9455E-004 | 4.95E-004 | 7.9166E-004 |
| + | NP-237 | 300.17* | 6.20 | 9.8820E-003 | 1.60E-003 | 1.4729E-002 |
| | | 312.00* | 36.00 | 1.5996E-003 | | 1.2627E-002 |
| | | 340.60* | 4.20 | 1.3266E-002 | | 1.1290E-002 |
| | | 375.45* | 0.68 | 7.8703E-002 | | 3.2740E-001 |
| | | 415.76* | 1.75 | 2.9678E-002 | | 1.3035E-001 |
| + | Pu-239 | 129.28* | 0.01 | 2.9803E+001 | 2.98E+001 | 1.1627E+002 |
| | | 375.00* | 0.00 | 3.3823E+001 | | 1.4070E+002 |
| | | 413.70* | 0.00 | 3.4296E+001 | | 1.5063E+002 |
| | | 451.50 | 0.00 | 5.0124E+002 | | 2.1176E+002 |
| + | AM-241 | 59.54* | 35.70 | 2.2684E-002 | 2.27E-002 | 3.4048E+001 |
| | | 125.28 | 0.00 | 8.0478E+001 | | -2.0421E+000 |
| | | 335.40* | 0.00 | 1.1274E+002 | | 1.0141E+002 |
| | | 662.42* | 0.00 | 1.1693E+002 | | 1.8718E+002 |
| | | 722.70 | 0.00 | 7.5609E+002 | | 3.0892E+002 |
| | PU-241 | 114.00 | 0.02 | 1.5867E+001 | 1.59E+001 | 4.2347E+000 |
| | | 332.60 | 0.00 | 4.1632E+001 | | 4.3119E+000 |
| | CM-243 | 209.70 | 3.27 | 4.6128E-002 | 7.55E-003 | 6.1948E-003 |
| | | 228.18 | 10.56 | 1.1830E-002 | | -6.4955E-003 |
| | | 277.60 | 14.00 | 7.5491E-003 | | -3.8430E-003 |

+ = Nuclide identified during the nuclide identification
* = Energy line found in the spectrum
> = MDA value not calculated
@ = Half-life too short to be able to perform the decay correction

N U C L I D E  T O T A L S

| Nuclide | Mass (g) |
|---|---|
| Pu-239 | 7.59E-002 +/- 4.42E-003 |

# C A N B E R R A  I S O C S  A N A L Y S I S

Report Generated On : 12/17/01 10:35:52 AM

Sample Title : 4929 Side B
Spectrum Description :
Sample Identification : 102~~8~~7 MWJ 12/17/01
Sample Size : 37.7 kg

Sample Taken On : 12/17/01 10:20:00 AM
Acquisition Started : 12/17/01 10:20:28 AM

Live Time: 900.0 seconds Real Time: 917.6 seconds

ISOCS Calabration : 4929 C CHANNE
Energy Calibration Used Done On : 11/29/01
Efficiency Calibration Used Done On : 12/17/01

# P E A K  A N A L Y S I S  R E P O R T

| Peak No. | Peak centroid | Energy (keV) | Net Peak Area | Net Area Uncert. | Continuum Counts |
|---|---|---|---|---|---|
| 1 | 239.15 | 59.82 | 4.96E+005 | 13917.1 | 6.32E+003 |
| 2 | 300.79 | 75.23 | 1.31E+003 | 57.03 | 2.13E+003 |
| 3 | 339.96 | 85.03 | 4.82E+002 | 46.09 | 2.14E+003 |
| 4 | 378.89 | 94.76 | 3.61E+002 | 47.00 | 1.99E+003 |
| 5 | 395.89 | 99.01 | 1.41E+003 | 58.22 | 1.91E+003 |
| 6 | 413.38 | 103.38 | 6.16E+002 | 49.97 | 1.83E+003 |
| 7 | 445.12 | 111.32 | 2.36E+002 | 42.79 | 1.67E+003 |
| 8 | 458.99 | 114.79 | 1.62E+002 | 40.10 | 1.61E+003 |
| 9 | 518.72 | 129.72 | 7.38E+002 | 46.73 | 1.30E+003 |
| 10 | 833.56 | 208.45 | 1.84E+002 | 20.07 | 2.33E+002 |
| 11 | 1202.11 | 300.60 | 5.23E+001 | 12.10 | 9.64E+001 |
| 12 | 1248.25 | 312.14 | 3.24E+002 | 20.84 | 9.59E+001 |
| 13 | 1330.36 | 332.67 | 6.06E+001 | 12.04 | 7.81E+001 |
| 14 | 1501.37 | 375.43 | 1.67E+002 | 14.62 | 4.54E+001 |
| 15 | 1655.70 | 414.02 | 1.59E+002 | 14.53 | 4.21E+001 |
| 16 | 2043.63 | 511.02 | 7.63E+001 | 10.84 | 2.89E+001 |
| 17 | 2647.25 | 661.95 | 5.34E+001 | 9.15 | 2.24E+001 |
| 18 | 7063.25 | 1766.14 | 1.93E+001 | 5.45 | 2.09E-001 |

## NUCLIDE IDENTIFICATION REPORT

| Nuclide Name | Id Confidence | Energy (keV) | Yield (%) | Activity (uCi) | Activity Uncertainty |
|---|---|---|---|---|---|
| CS-137 | 0.996 | 661.65* | 85.12 | 1.29564E-003 | 2.25791E-004 |
| NP-237 | 0.859 | 300.17* | 6.20 | 1.08905E-002 | 2.57338E-003 |
| | | 312.00* | 36.00 | 1.18641E-002 | 9.49963E-004 |
| | | 340.60 | 4.20 | | |
| | | 375.45* | 0.68 | 3.58487E-001 | 3.51673E-002 |
| | | 415.76* | 1.75 | 1.40693E-001 | 1.41273E-002 |
| Pu-239 | 0.966 | 129.28* | 0.01 | 1.26976E+002 | 2.27849E+001 |
| | | 375.00* | 0.00 | 1.54059E+002 | 1.79840E+001 |
| | | 413.70* | 0.00 | 1.62589E+002 | 1.95567E+001 |
| | | 451.50 @ | 0.00 | | |
| AM-241 | 0.997 | 59.54* | 35.70 | 2.86630E+001 | 2.41563E+000 |
| | | 125.28 | 0.00 | | |
| | | 335.40 | 0.00 | | |
| | | 662.42* @ | 0.00 | 3.06347E+002 | 5.33805E+001 |
| | | 722.70 | 0.00 | | |
| PU-241 | 0.978 | 114.00* | 0.02 | 7.72061E+000 | 1.95822E+000 |
| | | 332.60* | 0.00 | 2.85378E+001 | 5.82820E+000 |

## INTERFERENCE CORRECTED REPORT

| Nuclide Name | Nuclide Id Confidence | Wt mean Activity (uCi/kg ) | Wt mean Activity Uncertainty |
|---|---|---|---|
| CS-137 | 0.996 | 1.174416E-003 | 2.259944E-004 |
| NP-237 | 0.859 | 1.180726E-002 | 8.898776E-004 |
| Pu-239 @ | 0.966 | 1.368226E+002 | 7.427110E+000 |
| AM-241 @ | 0.997 | 2.866296E+001 | 2.415634E+000 |
| PU-241 | 0.978 | 9.832266E+000 | 1.856245E+000 |

? = nuclide is part of an undetermined solution
X = nuclide rejected by the interference analysis
@ = nuclide contains energy lines not used in Weighted Mean Activity

Errors quoted at 1.000 sigma

**********
***** N U C L I D E  M D A  R E P O R T *****
**********

| | Nuclide Name | Energy (keV) | Yield (%) | Line MDA (uCi/kg ) | Nuclide MDA (uCi/kg ) | Activity (uCi/kg ) |
|---|---|---|---|---|---|---|
| | CO-60 | 1173.22 | 100.00 | 9.0258E-004 | 9.03E-004 | 6.0144E-004 |
| | | 1332.49 | 100.00 | 9.4796E-004 | | 6.1928E-004 |
| | CS-134 | 475.35 | 1.46 | 6.0828E-002 | 1.02E-003 | -4.2035E-002 |
| | | 563.23 | 8.38 | 1.1230E-002 | | -2.7979E-003 |
| | | 569.32 | 15.43 | 6.0564E-003 | | 2.7982E-003 |
| | | 604.70 | 97.60 | 1.0565E-003 | | 7.0743E-005 |
| | | 795.84 | 85.40 | 1.0158E-003 | | 6.4894E-004 |
| | | 801.93 | 8.73 | 1.0544E-002 | | 6.4280E-003 |
| | | 1038.57 | 1.00 | 1.0169E-001 | | 5.5799E-002 |
| | | 1167.94 | 1.80 | 4.6815E-002 | | -1.7338E-002 |
| | | 1365.15 | 3.04 | 2.3483E-002 | | -1.0869E-002 |
| + | CS-137 | 661.65* | 85.12 | 5.9948E-004 | 5.99E-004 | 1.2956E-003 |
| + | NP-237 | 300.17* | 6.20 | 1.0076E-002 | 1.77E-003 | 1.0890E-002 |
| | | 312.00* | 36.00 | 1.7654E-003 | | 1.1864E-002 |
| | | 340.60 | 4.20 | 3.0264E-002 | | 2.5063E-002 |
| | | 375.45* | 0.68 | 7.3212E-002 | | 3.5849E-001 |
| | | 415.76* | 1.75 | 2.9127E-002 | | 1.4069E-001 |
| + | Pu-239 | 129.28* | 0.01 | 2.9345E+001 | 2.93E+001 | 1.2698E+002 |
| | | 375.00* | 0.00 | 3.1463E+001 | | 1.5406E+002 |
| | | 413.70* | 0.00 | 3.3660E+001 | | 1.6259E+002 |
| | | 451.50 | 0.00 | 5.1288E+002 | | 5.1765E+002 |
| + | AM-241 | 59.54* | 35.70 | 2.1516E-002 | 2.15E-002 | 2.8663E+001 |
| | | 125.28 | 0.00 | 8.0242E+001 | | 8.1590E+000 |
| | | 335.40 | 0.00 | 2.4851E+002 | | -7.4984E+001 |
| | | 662.42* | 0.00 | 1.4174E+002 | | 3.0635E+002 |
| | | 722.70 | 0.00 | 7.6882E+002 | | -2.7821E+002 |
| + | PU-241 | 114.00* | 0.02 | 9.0276E+000 | 9.03E+000 | 7.7206E+000 |
| | | 332.60* | 0.00 | 2.0647E+001 | | 2.8538E+001 |
| | CM-243 | 209.70 | 3.27 | 4.4585E-002 | 7.77E-003 | -1.7994E-002 |
| | | 228.18 | 10.56 | 1.1417E-002 | | -3.2853E-003 |
| | | 277.60 | 14.00 | 7.7670E-003 | | -1.1864E-003 |

+ = Nuclide identified during the nuclide identification
* = Energy line found in the spectrum
> = MDA value not calculated
@ = Half-life too short to be able to perform the decay correction

N U C L I D E  T O T A L S

| Nuclide | Mass (g) |
|---|---|
| Pu-239 | 8.32E-002 +/- 4.52E-003 |

# Bldg 233-S
# NDA Item Description Sheet
# Pipe Geometry

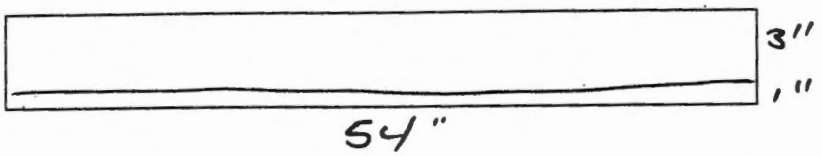


Put Dimensions on Pipe

**Item ID:** 2020

Weight (kg): 30 13.63

**Material Description:** 1 3" pipe & 1 1" pipe

**Packaging:** 3 layers

Detector Distance (in): @ 28

Detector Filters: None

Dose Rate: <.5

Comments: Modeled 4" pipe Side A 900 SEC 0997
Side B 900 SEC 0998

## 233-S Item Analysis

Spreadsheet Version 3.0b

1/14/02

**Sample Info:**

| | | | |
|---|---|---|---|
| **Item ID:** | 2020 | **Assay Date:** | 27-Dec-01 |
| **File Name:** | 1043 | **File Name:** | 1044 |

**Data Input:**

| Isotope | Activity (uCi/kg) | Meas Uncert | Activity (uCi/kg) | Meas Uncert |
|---|---|---|---|---|
| Pu-239 (129) | 6.95E+01 | 1.85E+01 | 7.68E+01 | 1.93E+01 |
| Pu-239 (414) | | | | |
| Am-241 | 2.37E+03 | 1.97E+02 | 3.95E+03 | 3.28E+02 |
| Np-237 | | | | |
| U-238 | | | | |
| U-235 | 1.51E-03 | 5.54E-04 | | |
| Cs-137 | | | | |
| Co-60 | | | | |

**Item Parameters:**

| | | | | | |
|---|---|---|---|---|---|
| Contamination: | Internal | Item Type: | Pipe or Duct | Calcs: | Average |

**Dimensions:**

| | | | | | |
|---|---|---|---|---|---|
| Length (in): | 54 | Width (in): | 4 | Depth (in): | 4 |
| Weight (lbs): | 30 | Depth for TMU (in): | 4 | % Volume: | 100 |

**Am-241 Calcs:**

| | | | | |
|---|---|---|---|---|
| Measured | 3.16E+03 | +/- | 1.43E+03 | Calc from Pu-239 |
| Calculated | 1.01E+02 | +/- | 7.85E+01 | |

**Nuclide Activities:**

| Isotope | Activity (nCi/g) | | Total Unc 1 sigma |
|---|---|---|---|
| Pu-238 | 2.96E+01 | +/- | 8.58E+00 |
| Pu-239 | 7.31E+01 | +/- | 2.12E+01 |
| Pu-240 | 3.81E+01 | +/- | 1.10E+01 |
| Pu-241 | 1.42E+02 | +/- | 4.12E+01 |
| Pu-242 | 3.85E-02 | +/- | 1.11E-02 |
| Am-241 | 1.01E+02 | +/- | 7.85E+01 |
| Np-237 | 0.00E+00 | +/- | 0.00E+00 |
| U-238 | 0.00E+00 | +/- | 0.00E+00 |
| U-235 | 7.54E-04 | +/- | 2.89E-04 |
| Cs-137 | 0.00E+00 | +/- | 0.00E+00 |
| Co-60 | 0.00E+00 | +/- | 0.00E+00 |

**Results:**

| | | | | | |
|---|---|---|---|---|---|
| **Total TRU Activity(nCi/g):** | 2.42E+02 | +/- | 8.25E+01 | Calc from Pu-239 Act | |
| **Pu (g):** | 1.86E-02 | **Pu (g) + 3 sigma TMU:** | 3.47E-02 | | |
| | | **Pu(g) + 3 sigma:** | 2.87E-02 | | |

**Comments:**

**Errors:**

**Analyst:** Martin Winterrose

**Date:** 1/24/02

```
#Date & Time: Thu Dec 06 12:01:57 2001
~g=PIPE
~description=2020_PIPE
~comment=1_3"_&_1_1"_PIPES
~Ccollimator=50MM-180D
~crpn=4
~Detector=7219
~Convergence in %=1            ~MDRPN=4
~Lunit=IN  ~Tunit=C  ~Dunit=G/CU.C    ~Punit=MM.HG
~at=20        ~ap=760        ~rh=50
~Energies kev=   50.000,  100.000,  128.000,  130.000,  150.000,  200.000,#
                300.000,  500.000,  700.000, 1000.000, 1400.000, 2000.000,#
               4000.000,
~Error in %=     10.000,   10.000,   10.000,   10.000,   10.000,    8.000,#
                  8.000,    6.000,    6.000,    4.000,    4.000,    4.000,#
                  4.000,
~d1.1=0.237     ~d1.2=4         ~d1.3=27        ~d1.4=27        ~1mater=304SS    ~1den=7.81
~d2.1=0.133     ~d2.2=27        ~d2.3=27        ~2mater=DRYDIRT  ~2den=1.6       ~2con=1
~sd1=28
```

## C A N B E R R A  I S O C S  A N A L Y S I S

Report Generated On : 12/27/01 9:36:05 AM

Sample Title : 2020 Side A
Spectrum Description :
Sample Identification : 1043
Sample Size : 13.6 kg

Sample Taken On : 12/27/01 9:08:00 AM
Acquisition Started : 12/27/01 9:05:53 AM

Live Time: 1800.0 seconds Real Time: 1805.0 seconds

ISOCS Calabration : 2020 PIPE
Energy Calibration Used Done On : 11/29/01
Efficiency Calibration Used Done On : 12/06/01

## P E A K  A N A L Y S I S  R E P O R T

| Peak No. | Peak centroid | Energy (keV) | Net Peak Area | Net Area Uncert. | Continuum Counts |
|---|---|---|---|---|---|
| 1 | 198.96 | 49.77 | 5.60E+002 | 81.93 | 3.98E+003 |
| 2 | 239.12 | 59.81 | 9.32E+004 | 2358.27 | 2.66E+003 |
| 3 | 300.99 | 75.28 | 2.62E+003 | 98.85 | 2.15E+003 |
| 4 | 339.91 | 85.01 | 1.10E+003 | 57.90 | 2.36E+003 |
| 5 | 350.90 | 87.76 | 2.85E+002 | 56.34 | 2.36E+003 |
| 6 | 395.96 | 99.03 | 2.83E+002 | 49.91 | 2.33E+003 |
| 7 | 411.86 | 103.01 | 1.89E+002 | 47.36 | 2.31E+003 |
| 8 | 518.94 | 129.78 | 2.08E+002 | 42.88 | 1.89E+003 |
| 9 | 742.20 | 185.60 | 6.05E+001 | 22.06 | 5.56E+002 |
| 10 | 1332.14 | 333.12 | 4.13E+001 | 12.67 | 1.38E+002 |
| 11 | 1408.89 | 352.31 | 1.17E+002 | 15.19 | 1.26E+002 |
| 12 | 1500.12 | 375.12 | 4.40E+001 | 11.98 | 1.13E+002 |
| 13 | 2043.28 | 510.93 | 1.37E+002 | 14.40 | 7.16E+001 |
| 14 | 2437.09 | 609.40 | 1.49E+002 | 14.72 | 6.39E+001 |
| 15 | 2646.81 | 661.84 | 8.75E+001 | 12.05 | 4.94E+001 |
| 16 | 4481.86 | 1120.68 | 6.92E+001 | 10.28 | 2.43E+001 |
| 17 | 7062.40 | 1765.93 | 7.54E+001 | 9.65 | 2.82E+000 |

## NUCLIDE IDENTIFICATION REPORT

| Nuclide Name | Id Confidence | Energy (keV) | Yield (%) | Activity (uCi) | Activity Uncertainty |
|---|---|---|---|---|---|
| U-235 | 0.668 | 143.76 | 10.50 | | |
| | | 185.71* | 54.00 | 1.50708E-003 | 5.53792E-004 |
| | | 205.31 | 4.70 | | |
| Pu-239 | 0.691 | 129.28* | 0.01 | 6.95031E+001 | 1.84797E+001 |
| | | 375.00* | 0.00 | 4.66596E+001 | 1.32061E+001 |
| | | 413.70 | 0.00 | | |
| | | 451.50 @ | 0.00 | | |
| AM-241 | 0.993 | 59.54* | 35.70 | 2.37380E+003 | 1.97992E+002 |
| | | 125.28 | 0.00 | | |
| | | 335.40 | 0.00 | | |
| | | 662.42* @ | 0.00 | 4.94998E+002 | 6.99238E+001 |
| | | 722.70 | 0.00 | | |

## INTERFERENCE CORRECTED REPORT

| | Nuclide Name | Nuclide Id Confidence | Wt mean Activity (uCi/kg ) | Wt mean Activity Uncertainty |
|---|---|---|---|---|
| X | CS-137 | 0.999 | | |
| | U-235 | 0.668 | 1.507076E-003 | 5.537921E-004 |
| | Pu-239 @ | 0.691 | 5.438189E+001 | 1.074452E+001 |
| | AM-241 @ | 0.993 | 2.373799E+003 | 1.979922E+002 |

? = nuclide is part of an undetermined solution
X = nuclide rejected by the interference analysis
@ = nuclide contains energy lines not used in Weighted Mean Activity

Errors quoted at 1.000 sigma

**********
***** N U C L I D E M D A R E P O R T *****
**********

| | Nuclide Name | Energy (keV) | Yield (%) | Line MDA (uCi/kg ) | Nuclide MDA (uCi/kg ) | Activity (uCi/kg ) |
|---|---|---|---|---|---|---|
| | CO-60 | 1173.22 | 100.00 | 1.1384E-003 | 1.05E-003 | 3.6219E-004 |
| | | 1332.49 | 100.00 | 1.0499E-003 | | 3.8656E-004 |
| | CS-134 | 475.35 | 1.46 | 9.8037E-002 | 1.40E-003 | 3.5315E-002 |
| | | 563.23 | 8.38 | 1.6665E-002 | | -2.5161E-005 |
| | | 569.32 | 15.43 | 8.8126E-003 | | -1.0108E-003 |
| | | 604.70 | 97.60 | 1.7842E-003 | | -4.3157E-004 |
| | | 795.84 | 85.40 | 1.3959E-003 | | -7.8376E-005 |
| | | 801.93 | 8.73 | 1.4122E-002 | | -5.8937E-003 |
| | | 1038.57 | 1.00 | 1.0832E-001 | | -1.2163E-001 |
| | | 1167.94 | 1.80 | 6.5274E-002 | | 2.0039E-002 |
| | | 1365.15 | 3.04 | 3.0469E-002 | | -7.1025E-003 |
| | CS-137 | 661.65* | 85.12 | 8.4737E-004 | 8.47E-004 | 2.0935E-003 |
| | NP-237 | 300.17 | 6.20 | 2.6134E-002 | 4.53E-003 | 1.9394E-002 |
| | | 312.00 | 36.00 | 4.5320E-003 | | 2.2576E-003 |
| | | 340.60 | 4.20 | 3.6934E-002 | | -3.1267E-003 |
| | | 375.45 | 0.68 | 2.3186E-001 | | 1.7181E-002 |
| | | 415.76 | 1.75 | 8.8044E-002 | | 4.4765E-002 |
| + | Pu-239 | 129.28* | 0.01 | 6.8469E+001 | 5.53E+001 | 6.9503E+001 |
| | | 375.00* | 0.00 | 5.5302E+001 | | 4.6660E+001 |
| | | 413.70 | 0.00 | 1.0252E+002 | | 2.3477E+001 |
| | | 451.50 | 0.00 | 7.7028E+002 | | 4.6718E+002 |
| + | AM-241 | 59.54* | 35.70 | 6.1792E+000 | 6.18E+000 | 2.3738E+003 |
| | | 125.28 | 0.00 | 2.0164E+002 | | -9.0146E+001 |
| | | 335.40 | 0.00 | 3.0585E+002 | | -9.0432E+001 |
| | | 662.42* | 0.00 | 2.0036E+002 | | 4.9500E+002 |
| | | 722.70 | 0.00 | 9.9043E+002 | | 4.4042E+002 |
| | PU-241 | 114.00 | 0.02 | 4.9517E+001 | 4.95E+001 | 5.6276E+001 |
| | | 332.60 | 0.00 | 5.3510E+001 | | 1.8061E+001 |
| | CM-243 | 209.70 | 3.27 | 5.8232E-002 | 1.12E-002 | 2.8865E-002 |
| | | 228.18 | 10.56 | 1.6817E-002 | | 1.1817E-002 |
| | | 277.60 | 14.00 | 1.1245E-002 | | -8.7454E-004 |

+ = Nuclide identified during the nuclide identification
* = Energy line found in the spectrum
> = MDA value not calculated
@ = Half-life too short to be able to perform the decay correction

N U C L I D E T O T A L S

| Nuclide | Mass (g) |
|---|---|
| U-235 | 9.33E-003 +/- 3.43E-003 |
| Pu-239 | 1.20E-002 +/- 2.36E-003 |

## NUCLIDE IDENTIFICATION REPORT

| Nuclide Name | Id Confidence | Energy (keV) | | Yield (%) | Activity (uCi) | Activity Uncertainty |
|---|---|---|---|---|---|---|
| Pu-239 | 0.693 | 129.28* | | 0.01 | 7.67524E+001 | 1.92884E+001 |
| | | 375.00* | | 0.00 | 3.65576E+001 | 1.27063E+001 |
| | | 413.70 | | 0.00 | | |
| | | 451.50 | @ | 0.00 | | |
| AM-241 | 0.992 | 59.54* | | 35.70 | 3.95316E+003 | 3.28283E+002 |
| | | 125.28 | | 0.00 | | |
| | | 335.40 | | 0.00 | | |
| | | 662.42* | @ | 0.00 | 5.55306E+002 | 7.37127E+001 |
| | | 722.70 | | 0.00 | | |

## INTERFERENCE CORRECTED REPORT

| | Nuclide Name | | Nuclide Id Confidence | Wt mean Activity (uCi/kg ) | Wt mean Activity Uncertainty |
|---|---|---|---|---|---|
| X | CS-137 | | 0.999 | | |
| | Pu-239 | @ | 0.693 | 4.872163E+001 | 1.061086E+001 |
| | AM-241 | @ | 0.992 | 3.953157E+003 | 3.282827E+002 |

? = nuclide is part of an undetermined solution
X = nuclide rejected by the interference analysis
@ = nuclide contains energy lines not used in Weighted Mean Activity

Errors quoted at 1.000 sigma

## C A N B E R R A  I S O C S  A N A L Y S I S

Report Generated On : 12/27/01 10:15:27 AM

Sample Title : 2020 Side B
Spectrum Description :
Sample Identification : 1044
Sample Size : 13.6 kg

Sample Taken On : 12/27/01 9:44:00 AM
Acquisition Started : 12/27/01 9:45:12 AM

Live Time: 1800.0 seconds Real Time: 1806.8 seconds

ISOCS Calabration : 2020 PIPE
Energy Calibration Used Done On : 11/29/01
Efficiency Calibration Used Done On : 12/06/01

## P E A K  A N A L Y S I S  R E P O R T

| Peak No. | Peak centroid | Energy (keV) | Net Peak Area | Net Area Uncert. | Continuum Counts |
|---|---|---|---|---|---|
| 1 | 239.15 | 59.82 | 1.56E+005 | 3746.30 | 3.10E+003 |
| 2 | 339.86 | 85.00 | 1.12E+003 | 59.41 | 2.45E+003 |
| 3 | 350.01 | 87.54 | 3.07E+002 | 54.63 | 2.46E+003 |
| 4 | 395.94 | 99.03 | 3.66E+002 | 52.34 | 2.43E+003 |
| 5 | 414.28 | 103.61 | 2.11E+002 | 50.97 | 2.39E+003 |
| 6 | 518.67 | 129.71 | 2.29E+002 | 42.90 | 1.97E+003 |
| 7 | 1408.10 | 352.11 | 1.21E+002 | 15.76 | 1.33E+002 |
| 8 | 1500.10 | 375.11 | 3.45E+001 | 11.68 | 1.20E+002 |
| 9 | 2043.92 | 511.09 | 1.71E+002 | 15.72 | 8.43E+001 |
| 10 | 2437.44 | 609.49 | 1.75E+002 | 15.63 | 5.41E+001 |
| 11 | 2646.54 | 661.77 | 9.81E+001 | 12.66 | 4.63E+001 |
| 12 | 3644.52 | 911.31 | 5.79E+001 | 9.91 | 3.02E+001 |
| 13 | 4482.84 | 1120.93 | 5.25E+001 | 9.48 | 2.56E+001 |
| 14 | 7061.37 | 1765.67 | 5.74E+001 | 8.59 | 2.48E+000 |

**********
***** N U C L I D E  M D A  R E P O R T *****
**********

| | Nuclide Name | Energy (keV) | Yield (%) | Line MDA (uCi/kg ) | Nuclide MDA (uCi/kg ) | Activity (uCi/kg ) |
|---|---|---|---|---|---|---|
| | CO-60 | 1173.22 | 100.00 | 1.1269E-003 | 9.77E-004 | 7.0772E-004 |
| | | 1332.49 | 100.00 | 9.7711E-004 | | 5.4734E-004 |
| | CS-134 | 475.35 | 1.46 | 1.0165E-001 | 1.43E-003 | -1.3676E-002 |
| | | 563.23 | 8.38 | 1.6104E-002 | | -2.3133E-003 |
| | | 569.32 | 15.43 | 9.1964E-003 | | 3.8401E-003 |
| | | 604.70 | 97.60 | 1.8783E-003 | | 4.8967E-004 |
| | | 795.84 | 85.40 | 1.4257E-003 | | 7.3771E-004 |
| | | 801.93 | 8.73 | 1.4359E-002 | | -2.5570E-003 |
| | | 1038.57 | 1.00 | 1.1523E-001 | | 7.7510E-002 |
| | | 1167.94 | 1.80 | 6.4351E-002 | | 1.7316E-002 |
| | | 1365.15 | 3.04 | 2.8792E-002 | | -1.8328E-002 |
| | CS-137 | 661.65* | 85.12 | 8.2284E-004 | 8.23E-004 | 2.3486E-003 |
| | NP-237 | 300.17 | 6.20 | 2.5809E-002 | 4.40E-003 | 1.0816E-002 |
| | | 312.00 | 36.00 | 4.3971E-003 | | 4.0340E-003 |
| | | 340.60 | 4.20 | 3.9056E-002 | | 2.9128E-002 |
| | | 375.45 | 0.68 | 2.3564E-001 | | 9.0804E-002 |
| | | 415.76 | 1.75 | 8.2327E-002 | | -8.1374E-003 |
| + | Pu-239 | 129.28* | 0.01 | 7.0049E+001 | 5.70E+001 | 7.6752E+001 |
| | | 375.00* | 0.00 | 5.6976E+001 | | 3.6558E+001 |
| | | 413.70 | 0.00 | 9.6633E+001 | | 5.6282E+001 |
| | | 451.50 | 0.00 | 7.6894E+002 | | -4.8297E+002 |
| + | AM-241 | 59.54* | 35.70 | 6.6509E+000 | 6.65E+000 | 3.9532E+003 |
| | | 125.28 | 0.00 | 2.0219E+002 | | -6.3007E+001 |
| | | 335.40 | 0.00 | 3.2472E+002 | | 4.6739E+002 |
| | | 662.42* | 0.00 | 1.9456E+002 | | 5.5531E+002 |
| | | 722.70 | 0.00 | 1.0020E+003 | | 8.0571E+002 |
| | PU-241 | 114.00 | 0.02 | 4.9832E+001 | 4.98E+001 | 2.5963E+001 |
| | | 332.60 | 0.00 | 5.3386E+001 | | 2.1243E+001 |
| | CM-243 | 209.70 | 3.27 | 6.0735E-002 | 1.13E-002 | -4.3619E-002 |
| | | 228.18 | 10.56 | 1.7102E-002 | | -1.0788E-002 |
| | | 277.60 | 14.00 | 1.1350E-002 | | -1.9241E-003 |

+ = Nuclide identified during the nuclide identification
* = Energy line found in the spectrum
> = MDA value not calculated
@ = Half-life too short to be able to perform the decay correction

N U C L I D E  T O T A L S

| Nuclide | Mass (g) |
|---|---|
| Pu-239 | 1.07E-002 +/- 2.33E-003 |

# Bldg 233-S
# NDA Item Description Sheet
# ~~Pipe~~ Geometry

RECTANGULAR

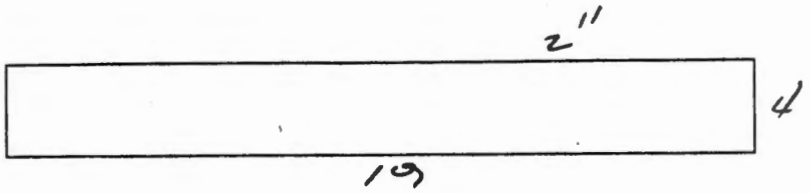


Put Dimensions on Pipe

**Item ID:** 4521

Weight (kg): 12 lb 5.4(Kg)

**Material Description:** 4 1/4" PIECES OF PLATE

**Packaging:** BLANKET

Detector Distance (in): 24

Detector Filters: NONE

Dose Rate: <.5

Comments: 1057 900 SICL
1060 1800

## 233-S Item Analysis

Spreadsheet Version 3.0b

1/14/02

**Sample Info:**

**Item ID:** 4521

**File Name:** 1060

**Assay Date:** 3-Jan-02

**File Name:**

**Data Input:**

| Isotope | Activity (uCi/kg) | Meas Uncert |
|---|---|---|
| Pu-239 (129) | 6.67E+01 | 1.79E+01 |
| Pu-239 (414) | | |
| Am-241 | 2.44E+01 | 2.06E+00 |
| Np-237 | 1.32E-02 | 1.26E-03 |
| U-238 | | |
| U-235 | | |
| Cs-137 | 2.13E-03 | 3.49E-04 |
| Co-60 | | |

| Activity (uCi/kg) | Meas Uncert |
|---|---|
| | |
| | |
| | |
| | |
| | |
| | |
| | |
| | |

**Item Parameters:**

Contamination: Internal and External

Item Type: Box

Calcs: Use 1st

**Dimensions:**

Length (in): 19

Width (in): 4

Depth (in): 2

Weight (lbs): 12

Depth for TMU (in): 4

% Volume: 100

**Am-241 Calcs:**

| | | | | |
|---|---|---|---|---|
| Measured | 2.44E+01 | +/- | 2.45E+01 | Use Meas |
| Calculated | 9.23E+01 | +/- | 1.14E+02 | |

**Nuclide Activities:**

| Isotope | Activity (nCi/g) | | Total Unc 1 sigma |
|---|---|---|---|
| Pu-238 | 2.70E+01 | +/- | 1.30E+01 |
| Pu-239 | 6.67E+01 | +/- | 3.22E+01 |
| Pu-240 | 3.48E+01 | +/- | 1.68E+01 |
| Pu-241 | 1.30E+02 | +/- | 6.26E+01 |
| Pu-242 | 3.51E-02 | +/- | 1.69E-02 |
| Am-241 | 2.44E+01 | +/- | 2.45E+01 |
| Np-237 | 1.32E-02 | +/- | 2.92E-03 |
| U-238 | 0.00E+00 | +/- | 0.00E+00 |
| U-235 | 0.00E+00 | +/- | 0.00E+00 |
| Cs-137 | 2.13E-03 | +/- | 5.51E-04 |
| Co-60 | 0.00E+00 | +/- | 0.00E+00 |

**Results:**

| | | | | |
|---|---|---|---|---|
| **Total TRU Activity(nCi/g):** | 1.53E+02 | +/- | 4.57E+01 | Calc from Pu-239 Act |
| **Pu (g):** | 6.77E-03 | **Pu (g) + 3 sigma TMU:** | 1.66E-02 | |
| | | **Pu(g) + 3 sigma:** | 1.22E-02 | |

**Comments:**

Density error due to high metal content.

Errors:Density > 1,

**Analyst:** Martin Winterrose

**Date:** 1/24/02

```
#Date & Time: Thu Jan 03 14:37:12 2002
~g=RECTANGULAR_PLANE
~description=4521_PLATE
~comment=STEEL_PLATE
~Ccollimator=50MM-180D
~crpn=4
~Detector=7219
~Convergence in %=1            ~MDRPN=4
~Lunit=IN  ~Tunit=C  ~Dunit=G/CU.C    ~Punit=MM.HG
~at=20        ~ap=760       ~rh=50
~Energies kev=   50.000,  100.000,  128.000,  130.000,  150.000,  200.000,#
                300.000,  500.000,  700.000, 1000.000, 1400.000, 2000.000,#
               4000.000,
~Error in %=     10.000,   10.000,   10.000,   10.000,   10.000,    8.000,#
                  8.000,    6.000,    6.000,    4.000,    4.000,    4.000,#
                  4.000,
~d1.1=0.025     ~d1.2=19        ~d1.3=4         ~1mater=POLYPROP ~1den=0.91
~d2.1=0.025     ~2mater=DRYDIRT  ~2den=1.6       ~2con=0.2
~d3.1=0.25      ~3mater=304SS    ~3den=7.81
~d4.1=0.025     ~4mater=DRYDIRT  ~4den=1.6       ~4con=0.2
~d5.1=0.25      ~5mater=304SS    ~5den=7.81
~d6.1=0.025     ~6mater=DRYDIRT  ~6den=1.6       ~6con=0.2
~d7.1=0.25      ~7mater=304SS    ~7den=7.81
~d8.1=0.025     ~8mater=DRYDIRT  ~8den=1.6       ~8con=0.2
~d9.1=0.25      ~9mater=304SS    ~9den=7.81
~d10.1=0.025     ~10mater=DRYDIRT  ~10den=1.6       ~10con=0.2
~sd1=24
```

## C A N B E R R A  I S O C S  A N A L Y S I S

Report Generated On : 1/03/02 3:12:21 PM

Sample Title : 4521 Side B
Spectrum Description :
Sample Identification : 1060
Sample Size : 5.4 kg

Sample Taken On : 1/03/02 2:56:00 PM
Acquisition Started : 1/03/02 2:57:11 PM

Live Time: 1800.0 seconds Real Time: 1808.8 seconds

ISOCS Calabration : 4521 PLATE
Energy Calibration Used Done On : 11/29/01
Efficiency Calibration Used Done On : 1/03/02

## P E A K  A N A L Y S I S  R E P O R T

| Peak No. | Peak centroid | Energy (keV) | Net Peak Area | Net Area Uncert. | Continuum Counts |
|---|---|---|---|---|---|
| 1 | 239.16 | 59.82 | 2.16E+005 | 5981.29 | 3.69E+003 |
| 2 | 340.13 | 85.07 | 7.89E+002 | 68.88 | 2.71E+003 |
| 3 | 351.43 | 87.89 | 1.61E+002 | 55.16 | 2.73E+003 |
| 4 | 396.37 | 99.13 | 5.09E+002 | 54.72 | 2.72E+003 |
| 5 | 413.79 | 103.49 | 2.81E+002 | 55.06 | 2.69E+003 |
| 6 | 519.04 | 129.80 | 2.15E+002 | 45.20 | 2.21E+003 |
| 7 | 1248.12 | 312.11 | 2.47E+002 | 20.35 | 1.61E+002 |
| 8 | 1408.18 | 352.13 | 1.19E+002 | 15.35 | 1.21E+002 |
| 9 | 1501.13 | 375.37 | 3.94E+001 | 11.77 | 1.01E+002 |
| 10 | 2043.70 | 511.04 | 1.31E+002 | 17.20 | 7.22E+001 |
| 11 | 2332.64 | 583.28 | 6.47E+001 | 11.01 | 4.96E+001 |
| 12 | 2437.31 | 609.45 | 1.37E+002 | 14.11 | 4.80E+001 |
| 13 | 2645.89 | 661.61 | 6.74E+001 | 10.83 | 4.70E+001 |
| 14 | 7062.77 | 1766.02 | 6.22E+001 | 8.92 | 1.17E+000 |

## NUCLIDE IDENTIFICATION REPORT

| Nuclide Name | Id Confidence | Energy (keV) | Yield (%) | Activity (uCi) | Activity Uncertainty |
|---|---|---|---|---|---|
| CS-137 | 1.000 | 661.65* | 85.12 | 2.13104E-003 | 3.48943E-004 |
| NP-237 | 0.604 | 300.17 | 6.20 | | |
| | | 312.00* | 36.00 | 1.32372E-002 | 1.25911E-003 |
| | | 340.60 | 4.20 | | |
| | | 375.45* | 0.68 | 1.19630E-001 | 3.61277E-002 |
| | | 415.76 | 1.75 | | |
| Pu-239 | 0.717 | 129.28* | 0.01 | 6.67453E+001 | 1.79408E+001 |
| | | 375.00* | 0.00 | 5.14105E+001 | 1.58629E+001 |
| | | 413.70 | 0.00 | | |
| | | 451.50 @ | 0.00 | | |
| AM-241 | 0.996 | 59.54* | 35.70 | 2.44219E+001 | 2.05542E+000 |
| | | 125.28 | 0.00 | | |
| | | 335.40 | 0.00 | | |
| | | 662.42* @ | 0.00 | 5.03871E+002 | 8.24944E+001 |
| | | 722.70 | 0.00 | | |

## INTERFERENCE CORRECTED REPORT

| Nuclide Name | Nuclide Id Confidence | Wt mean Activity (uCi/kg ) | Wt mean Activity Uncertainty |
|---|---|---|---|
| CS-137 | 1.000 | 2.027747E-003 | 3.490038E-004 |
| NP-237 | 0.604 | 1.320520E-002 | 1.258703E-003 |
| Pu-239 @ | 0.717 | 5.706449E+001 | 1.054183E+001 |
| AM-241 @ | 0.996 | 2.442193E+001 | 2.055419E+000 |

? = nuclide is part of an undetermined solution
X = nuclide rejected by the interference analysis
@ = nuclide contains energy lines not used in Weighted Mean Activity

Errors quoted at 1.000 sigma

**********
***** N U C L I D E  M D A  R E P O R T *****
**********

| | Nuclide Name | Energy (keV) | Yield (%) | Line MDA (uCi/kg ) | Nuclide MDA (uCi/kg ) | Activity (uCi/kg ) |
|---|---|---|---|---|---|---|
| | CO-60 | 1173.22 | 100.00 | 1.6929E-003 | 1.49E-003 | 2.1031E-004 |
| | | 1332.49 | 100.00 | 1.4856E-003 | | 6.3872E-004 |
| | CS-134 | 475.35 | 1.46 | 1.1812E-001 | 1.90E-003 | 5.2119E-002 |
| | | 563.23 | 8.38 | 2.0587E-002 | | -5.7293E-003 |
| | | 569.32 | 15.43 | 1.1677E-002 | | 6.6142E-003 |
| | | 604.70 | 97.60 | 2.2816E-003 | | 6.6443E-004 |
| | | 795.84 | 85.40 | 1.8992E-003 | | -7.3947E-005 |
| | | 801.93 | 8.73 | 1.9609E-002 | | 1.6793E-004 |
| | | 1038.57 | 1.00 | 1.6193E-001 | | -8.9376E-002 |
| | | 1167.94 | 1.80 | 9.6217E-002 | | 1.1029E-001 |
| | | 1365.15 | 3.04 | 4.6729E-002 | | 4.1243E-002 |
| + | CS-137 | 661.65* | 85.12 | 1.0939E-003 | 1.09E-003 | 2.1310E-003 |
| + | NP-237 | 300.17 | 6.20 | 3.4976E-002 | 3.30E-003 | -2.2976E-002 |
| | | 312.00* | 36.00 | 3.3001E-003 | | 1.3237E-002 |
| | | 340.60 | 4.20 | 4.9570E-002 | | 1.9904E-002 |
| | | 375.45* | 0.68 | 1.4998E-001 | | 1.1963E-001 |
| | | 415.76 | 1.75 | 1.0807E-001 | | 7.6176E-002 |
| + | Pu-239 | 129.28* | 0.01 | 6.8691E+001 | 6.45E+001 | 6.6745E+001 |
| | | 375.00* | 0.00 | 6.4452E+001 | | 5.1410E+001 |
| | | 413.70 | 0.00 | 1.2660E+002 | | 2.0192E+002 |
| | | 451.50 | 0.00 | 9.8282E+002 | | 9.9712E+002 |
| + | AM-241 | 59.54* | 35.70 | 3.2266E-002 | 3.23E-002 | 2.4422E+001 |
| | | 125.28 | 0.00 | 1.8710E+002 | | 3.0104E+001 |
| | | 335.40 | 0.00 | 4.0185E+002 | | -2.8403E+002 |
| | | 662.42* | 0.00 | 2.5864E+002 | | 5.0387E+002 |
| | | 722.70 | 0.00 | 1.3517E+003 | | 4.4635E+002 |
| | PU-241 | 114.00 | 0.02 | 3.6344E+001 | 3.63E+001 | 8.0912E+000 |
| | | 332.60 | 0.00 | 6.8349E+001 | | -3.0679E+001 |
| | CM-243 | 209.70 | 3.27 | 8.4123E-002 | 1.48E-002 | 9.6124E-003 |
| | | 228.18 | 10.56 | 2.3614E-002 | | -1.5585E-002 |
| | | 277.60 | 14.00 | 1.4820E-002 | | -3.6479E-003 |

+ = Nuclide identified during the nuclide identification
* = Energy line found in the spectrum
> = MDA value not calculated
@ = Half-life too short to be able to perform the decay correction

N U C L I D E  T O T A L S

| Nuclide | Mass (g) |
|---|---|
| Pu-239 | 5.02E-003 +/- 9.27E-004 |

# Bldg 233-S
## NDA Item Description Sheet
## ~~Pipe~~ Geometry
RECTANGULAR

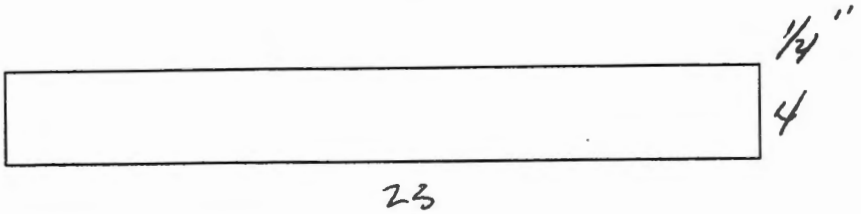


Put Dimensions on Pipe

**Item ID:** 4537

Weight (kg): ~~7~~ 9 LBS

**Material Description:** 1/2 PLATE

**Packaging:** BLAYER

Detector Distance (in): 24

Detector Filters: ABOVE

Dose Rate: <5

Comments: 1 900 SGL 1053
2 1800 SGL 1054

## 233-S Item Analysis

Spreadsheet Version 3.0b

1/14/02

**Sample Info:**

**Item ID:** 4537

**File Name:** 1054

**Assay Date:** 3-Jan-02

**File Name:**

**Data Input:**

| Isotope | Activity (uCi/kg) | Meas Uncert |
|---|---|---|
| Pu-239 (129) | 3.82E+01 | 1.08E+01 |
| Pu-239 (414) | | |
| Am-241 | 7.93E+00 | 6.59E-01 |
| Np-237 | 3.87E-03 | 6.52E-04 |
| U-238 | | |
| U-235 | 1.62E-03 | 5.02E-04 |
| Cs-137 | 2.44E-03 | 3.37E-04 |
| Co-60 | | |

| Activity (uCi/kg) | Meas Uncert |
|---|---|
| | |
| | |
| | |
| | |
| | |
| | |
| | |
| | |

**Item Parameters:**

Contamination: Surface only

Item Type: Box

Calcs: Use 1st

**Dimensions:**

Length (in): 23

Weight (lbs): 9

Width (in): 4

Depth for TMU (in): 4

Depth (in): 0.25

% Volume: 100

**Am-241 Calcs:**

| | | | | |
|---|---|---|---|---|
| Measured | 7.93E+00 | +/- | 2.09E+00 | Calc from Pu-239 |
| Calculated | 5.28E+01 | +/- | 4.47E+01 | |

**Nuclide Activities:**

| Isotope | Activity (nCi/g) | | Total Unc 1 sigma |
|---|---|---|---|
| Pu-238 | 1.55E+01 | +/- | 4.95E+00 |
| Pu-239 | 3.82E+01 | +/- | 1.22E+01 |
| Pu-240 | 1.99E+01 | +/- | 6.37E+00 |
| Pu-241 | 7.43E+01 | +/- | 2.38E+01 |
| Pu-242 | 2.01E-02 | +/- | 6.43E-03 |
| Am-241 | 5.28E+01 | +/- | 4.47E+01 |
| Np-237 | 3.87E-03 | +/- | 7.58E-04 |
| U-238 | 0.00E+00 | +/- | 0.00E+00 |
| U-235 | 1.62E-03 | +/- | 5.27E-04 |
| Cs-137 | 2.44E-03 | +/- | 4.16E-04 |
| Co-60 | 0.00E+00 | +/- | 0.00E+00 |

**Results:**

| | | | | | |
|---|---|---|---|---|---|
| **Total TRU Activity(nCi/g):** | | 1.26E+02 | +/- | 4.71E+01 | Calc from Pu-239 Act |
| **Pu (g):** | 2.91E-03 | **Pu (g) + 3 sigma TMU:** | | 5.70E-03 | |
| | | **Pu(g) + 3 sigma:** | | 5.37E-03 | |

**Comments:**

Density >1 due to high metal content for model.

Errors:Density > 1,

**Analyst:** Martin Winterrose

**Date:** 2/6/02

```
#Date & Time: Thu Jan 03 11:44:03 2002
~g=RECTANGULAR_PLANE
~description=4537_PLATE
~comment=STEEL_PLATE
~Ccollimator=50MM-180D
~crpn=4
~Detector=7219
~Convergence in %=1            ~MDRPN=4
~Lunit=IN  ~Tunit=C  ~Dunit=G/CU.C    ~Punit=MM.HG
~at=20        ~ap=760       ~rh=50
~Energies kev=   50.000,  100.000,  128.000,  130.000,  150.000,  200.000,#
                300.000,  500.000,  700.000, 1000.000, 1400.000, 2000.000,#
               4000.000,
~Error in %=     10.000,   10.000,   10.000,   10.000,   10.000,    8.000,#
                  8.000,    6.000,    6.000,    4.000,    4.000,    4.000,#
                  4.000,
~d1.1=0.025     ~d1.2=23        ~d1.3=4         ~1mater=POLYPROP ~1den=0.91
~d2.1=0.024     ~2mater=POLYPROP ~2den=0.91
~d3.1=0.025     ~3mater=DRYDIRT  ~3den=1.6       ~3con=0.5
~d4.1=0.25      ~4mater=304SS    ~4den=7.81
~d5.1=0.025     ~5mater=DRYDIRT  ~5den=1.6       ~5con=0.5
~d6.1=0.024     ~6mater=POLYPROP ~6den=0.91
~sd1=24
```

## C A N B E R R A  I S O C S  A N A L Y S I S

Report Generated On : 1/03/02 12:18:45 PM

Sample Title : 4537 Side B
Spectrum Description :
Sample Identification : 1054
Sample Size : 4.0 kg

Sample Taken On : 1/03/02 12:03:00 PM
Acquisition Started : 1/03/02 12:03:36 PM

Live Time: 1800.0 seconds Real Time: 1805.9 seconds

ISOCS Calabration : 4537 PLATE
Energy Calibration Used Done On : 11/29/01
Efficiency Calibration Used Done On : 1/03/02

## P E A K  A N A L Y S I S  R E P O R T

| Peak No. | Peak centroid | Energy (keV) | Net Peak Area | Net Area Uncert. | Continuum Counts |
|---|---|---|---|---|---|
| 1 | 239.14 | 59.82 | 1.27E+005 | 3127.54 | 2.87E+003 |
| 2 | 340.09 | 85.06 | 8.47E+002 | 58.67 | 2.48E+003 |
| 3 | 350.32 | 87.62 | 2.44E+002 | 51.78 | 2.49E+003 |
| 4 | 396.27 | 99.11 | 3.41E+002 | 50.59 | 2.50E+003 |
| 5 | 412.85 | 103.25 | 1.69E+002 | 48.83 | 2.47E+003 |
| 6 | 518.66 | 129.71 | 1.97E+002 | 44.77 | 2.05E+003 |
| 7 | 743.85 | 186.02 | 7.16E+001 | 21.95 | 5.18E+002 |
| 8 | 1247.78 | 312.02 | 9.26E+001 | 14.95 | 1.43E+002 |
| 9 | 1407.66 | 352.00 | 9.75E+001 | 14.72 | 1.21E+002 |
| 10 | 1500.94 | 375.32 | 3.46E+001 | 11.02 | 9.49E+001 |
| 11 | 2044.27 | 511.18 | 1.10E+002 | 13.39 | 6.63E+001 |
| 12 | 2437.06 | 609.39 | 1.14E+002 | 13.12 | 4.90E+001 |
| 13 | 2646.59 | 661.78 | 8.71E+001 | 11.75 | 3.94E+001 |
| 14 | 7063.19 | 1766.13 | 4.10E+001 | 7.54 | 1.25E+000 |

## NUCLIDE IDENTIFICATION REPORT

| Nuclide Name | Id Confidence | Energy (keV) | Yield (%) | Activity (uCi) | Activity Uncertainty |
|---|---|---|---|---|---|
| CS-137 | 0.999 | 661.65* | 85.12 | 2.43724E-003 | 3.37478E-004 |
| U-235 | 0.644 | 143.76 | 10.50 | | |
| | | 185.71* | 54.00 | 1.61842E-003 | 5.01794E-004 |
| | | 205.31 | 4.70 | | |
| NP-237 | 0.606 | 300.17 | 6.20 | | |
| | | 312.00* | 36.00 | 3.86882E-003 | 6.51688E-004 |
| | | 340.60 | 4.20 | | |
| | | 375.45* | 0.68 | 8.50608E-002 | 2.73728E-002 |
| | | 415.76 | 1.75 | | |
| Pu-239 | 0.745 | 129.28* | 0.01 | 3.81741E+001 | 1.07719E+001 |
| | | 375.00* | 0.00 | 3.65546E+001 | 1.19886E+001 |
| | | 413.70 | 0.00 | | |
| | | 451.50 @ | 0.00 | | |
| AM-241 | 0.997 | 59.54* | 35.70 | 7.92537E+000 | 6.59464E-001 |
| | | 125.28 | 0.00 | | |
| | | 335.40 | 0.00 | | |
| | | 662.42* @ | 0.00 | 5.76272E+002 | 7.97795E+001 |
| | | 722.70 | 0.00 | | |

## INTERFERENCE CORRECTED REPORT

| Nuclide Name | Nuclide Id Confidence | Wt mean Activity (uCi/kg ) | Wt mean Activity Uncertainty |
|---|---|---|---|
| CS-137 | 0.999 | 2.403721E-003 | 3.374248E-004 |
| U-235 | 0.644 | 1.618419E-003 | 5.017936E-004 |
| NP-237 | 0.606 | 3.866050E-003 | 6.515696E-004 |
| Pu-239 @ | 0.745 | 3.699015E+001 | 7.067025E+000 |
| AM-241 @ | 0.997 | 7.925366E+000 | 6.594638E-001 |

? = nuclide is part of an undetermined solution
X = nuclide rejected by the interference analysis
@ = nuclide contains energy lines not used in Weighted Mean Activity

Errors quoted at 1.000 sigma

**********
***** N U C L I D E  M D A  R E P O R T *****
**********

| | Nuclide Name | Energy (keV) | Yield (%) | Line MDA (uCi/kg ) | Nuclide MDA (uCi/kg ) | Activity (uCi/kg ) |
|---|---|---|---|---|---|---|
| | CO-60 | 1173.22 | 100.00 | 1.5801E-003 | 1.26E-003 | -1.4155E-003 |
| | | 1332.49 | 100.00 | 1.2636E-003 | | 5.2796E-004 |
| | CS-134 | 475.35 | 1.46 | 1.0198E-001 | 1.75E-003 | 6.7720E-002 |
| | | 563.23 | 8.38 | 1.7311E-002 | | 1.5385E-003 |
| | | 569.32 | 15.43 | 9.1806E-003 | | -7.9364E-003 |
| | | 604.70 | 97.60 | 1.8430E-003 | | -1.3365E-004 |
| | | 795.84 | 85.40 | 1.7478E-003 | | -3.1601E-004 |
| | | 801.93 | 8.73 | 1.7368E-002 | | -8.0114E-003 |
| | | 1038.57 | 1.00 | 1.3594E-001 | | 5.6907E-002 |
| | | 1167.94 | 1.80 | 8.8473E-002 | | -5.0782E-003 |
| | | 1365.15 | 3.04 | 4.6594E-002 | | 1.8927E-002 |
| + | CS-137 | 661.65* | 85.12 | 8.9288E-004 | 8.93E-004 | 2.4372E-003 |
| + | NP-237 | 300.17 | 6.20 | 2.5431E-002 | 2.44E-003 | 1.6124E-003 |
| | | 312.00* | 36.00 | 2.4426E-003 | | 3.8688E-003 |
| | | 340.60 | 4.20 | 3.7838E-002 | | 1.8147E-002 |
| | | 375.45* | 0.68 | 1.1813E-001 | | 8.5061E-002 |
| | | 415.76 | 1.75 | 8.6007E-002 | | 8.0046E-002 |
| + | Pu-239 | 129.28* | 0.01 | 4.1213E+001 | 4.12E+001 | 3.8174E+001 |
| | | 375.00* | 0.00 | 5.0768E+001 | | 3.6555E+001 |
| | | 413.70 | 0.00 | 9.7368E+001 | | -2.6583E+001 |
| | | 451.50 | 0.00 | 7.3353E+002 | | -4.5211E+002 |
| + | AM-241 | 59.54* | 35.70 | 1.5747E-002 | 1.57E-002 | 7.9254E+000 |
| | | 125.28 | 0.00 | 1.1250E+002 | | 5.9888E+001 |
| | | 335.40 | 0.00 | 3.0652E+002 | | 1.4622E+002 |
| | | 662.42* | 0.00 | 2.1112E+002 | | 5.7627E+002 |
| | | 722.70 | 0.00 | 1.1152E+003 | | 1.3468E+002 |
| | PU-241 | 114.00 | 0.02 | 2.1064E+001 | 2.11E+001 | -1.8877E+000 |
| | | 332.60 | 0.00 | 5.1660E+001 | | 3.3894E-001 |
| | CM-243 | 209.70 | 3.27 | 5.6860E-002 | 1.09E-002 | -3.7882E-003 |
| | | 228.18 | 10.56 | 1.6549E-002 | | -1.2260E-002 |
| | | 277.60 | 14.00 | 1.0888E-002 | | -5.8000E-003 |

+ = Nuclide identified during the nuclide identification
* = Energy line found in the spectrum
> = MDA value not calculated
@ = Half-life too short to be able to perform the decay correction

N U C L I D E  T O T A L S

| Nuclide | Mass (g) |
|---|---|
| U-235 | 2.94E-003 +/- 9.11E-004 |
| Pu-239 | 2.39E-003 +/- 4.56E-004 |

# Bldg 233-S
# NDA Item Description Sheet
# ~~Pipe~~ Geometry
RECTANGULAR

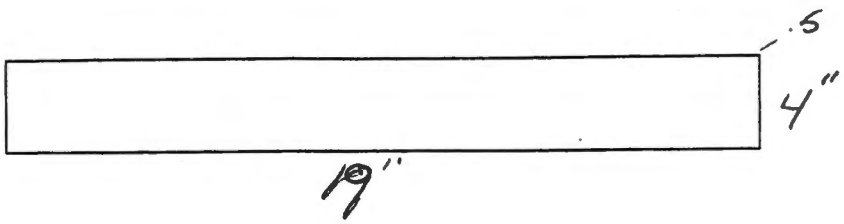


Put Dimensions on Pipe

**Item ID:** 4554

Weight (kg): 13

**Material Description:** 2 1/4" PLATES

**Packaging:** 3 LAYER

Detector Distance (in): 24

Detector Filters: NONE

Dose Rate: <.5

Comments: 1 900 1057
2 1800 1058

## 233-S Item Analysis

Spreadsheet Version 3.0b

1/14/02

**Sample Info:**

**Item ID:** 4554

**File Name:** 1058

**Assay Date:** 3-Jan-02

**File Name:**

**Data Input:**

| Isotope | Activity (uCi/kg) | Meas Uncert |
|---|---|---|
| Pu-239 (129) | 6.65E+01 | |
| Pu-239 (414) | | |
| Am-241 | 4.00E+00 | 3.32E-01 |
| Np-237 | 3.43E-03 | 5.66E-04 |
| U-238 | | |
| U-235 | | |
| Cs-137 | 1.65E-03 | 2.52E-04 |
| Co-60 | | |

| Activity (uCi/kg) | Meas Uncert |
|---|---|
| | |
| | |
| | |
| | |
| | |
| | |
| | |
| | |

**Item Parameters:**

Contamination: Internal and External

Item Type: Box

Calcs: Use 1st

**Dimensions:**

Length (in): 19

Weight (lbs): 13

Width (in): 4

Depth for TMU (in): 4

Depth (in): 0.5

% Volume: 100

**Am-241 Calcs:**

| | | | | |
|---|---|---|---|---|
| Measured | 4.00E+00 | +/- | 4.01E+00 | Use Meas |
| Calculated | 9.21E+01 | +/- | 9.53E+01 | |

**Nuclide Activities:**

| Isotope | Activity (nCi/g) | | Total Unc 1 sigma |
|---|---|---|---|
| Pu-238 | 2.70E+01 | +/- | 1.08E+01 |
| Pu-239 | 6.65E+01 | +/- | 2.66E+01 |
| Pu-240 | 3.47E+01 | +/- | 1.39E+01 |
| Pu-241 | 1.30E+02 | +/- | 5.19E+01 |
| Pu-242 | 3.50E-02 | +/- | 1.40E-02 |
| Am-241 | 4.00E+00 | +/- | 4.01E+00 |
| Np-237 | 3.43E-03 | +/- | 8.89E-04 |
| U-238 | 0.00E+00 | +/- | 0.00E+00 |
| U-235 | 0.00E+00 | +/- | 0.00E+00 |
| Cs-137 | 1.65E-03 | +/- | 4.14E-04 |
| Co-60 | 0.00E+00 | +/- | 0.00E+00 |

**Results:**

| | | | | |
|---|---|---|---|---|
| **Total TRU Activity(nCi/g):** | 1.32E+02 | +/- | 3.22E+01 | Calc from Pu-239 MDA |
| **Pu (g):** 7.32E-03 | **Pu (g) + 3 sigma TMU:** | | 1.61E-02 | |
| | **Pu(g) + 3 sigma:** | | 7.32E-03 | |

**Comments:**

Density error due to high metal content. Total TRU calc from Pu-239 MDA, Both methods come up TRU.

Errors:Density > 1,

**Analyst:** Martin Winterrose

**Date:** 1/24/02

```
#Date & Time: Thu Jan 03 13:42:01 2002
~g=RECTANGULAR_PLANE
~description=4554
~comment=2_1/4"_PLATES
~Ccollimator=50MM-180D
~crpn=4
~Detector=7219
~Convergence in %=1            ~MDRPN=4
~Lunit=IN  ~Tunit=C  ~Dunit=G/CU.C    ~Punit=MM.HG
~at=20        ~ap=760       ~rh=50
~Energies kev=   50.000,  100.000,  128.000,  130.000,  150.000,  200.000,#
                300.000,  500.000,  700.000, 1000.000, 1400.000, 2000.000,#
               4000.000,
~Error in %=     10.000,   10.000,   10.000,   10.000,   10.000,    8.000,#
                  8.000,    6.000,    6.000,    4.000,    4.000,    4.000,#
                  4.000,
~d1.1=0.024     ~d1.2=19        ~d1.3=4         ~1mater=POLYPROP ~1den=0.91
~d2.1=0.024     ~2mater=POLYPROP ~2den=0.91
~d3.1=0.024     ~3mater=DRYDIRT  ~3den=1.6       ~3con=0.333
~d4.1=0.25      ~4mater=304SS    ~4den=7.81
~d5.1=0.024     ~5mater=DRYDIRT  ~5den=1.6       ~5con=0.333
~d6.1=0.25      ~6mater=304SS    ~6den=7.81
~d7.1=0.024     ~7mater=DRYDIRT  ~7den=1.6       ~7con=0.333
~d8.1=0.024     ~8mater=POLYPROP ~8den=0.91
~sd1=24
```

## C A N B E R R A  I S O C S  A N A L Y S I S

Report Generated On : 1/04/02 3:35:58 PM

Sample Title : 4554 Side B
Spectrum Description :
Sample Identification : 1058
Sample Size : 5.9 kg

Sample Taken On : 1/03/02 2:00:00 PM
Acquisition Started : 1/03/02 2:00:44 PM

Live Time: 1800.0 seconds Real Time: 1804.1 seconds

Energy Calibration Used Done On : 11/29/01
Efficiency Calibration Used Done On : 1/03/02

## P E A K  A N A L Y S I S  R E P O R T

| Peak No. | Peak centroid | Energy (keV) | Net Peak Area | Net Area Uncert. | Continuum Counts |
|---|---|---|---|---|---|
| 1 | 239.15 | 59.82 | 6.40E+004 | 1534.94 | 2.52E+003 |
| 2 | 372.13 | 93.07 | 1.60E+002 | 49.79 | 2.63E+003 |
| 3 | 1247.80 | 312.03 | 9.94E+001 | 15.73 | 1.61E+002 |
| 4 | 1407.70 | 352.01 | 1.20E+002 | 15.27 | 1.24E+002 |
| 5 | 2043.83 | 511.07 | 1.43E+002 | 15.98 | 7.02E+001 |
| 6 | 2438.09 | 609.65 | 1.34E+002 | 14.17 | 4.77E+001 |
| 7 | 2646.29 | 661.71 | 7.53E+001 | 11.27 | 4.23E+001 |
| 8 | 3645.49 | 911.55 | 5.20E+001 | 9.55 | 2.89E+001 |
| 9 | 7062.32 | 1765.91 | 6.45E+001 | 9.17 | 1.86E+000 |

## N U C L I D E  I D E N T I F I C A T I O N  R E P O R T

| Nuclide Name | Id Confidence | Energy (keV) | Yield (%) | Activity (uCi) | Activity Uncertainty |
|---|---|---|---|---|---|
| CS-137 | 1.000 | 661.65* | 85.12 | 1.64667E-003 | 2.51782E-004 |
| NP-237 | 0.584 | 300.17 | 6.20 | | |
| | | 312.00* | 36.00 | 3.42711E-003 | 5.66299E-004 |
| | | 340.60 | 4.20 | | |
| | | 375.45 | 0.68 | | |
| | | 415.76 | 1.75 | | |
| AM-241 | 0.997 | 59.54* | 35.70 | 4.00028E+000 | 3.32071E-001 |
| | | 125.28 | 0.00 | | |
| | | 335.40 | 0.00 | | |
| | | 662.42* @ | 0.00 | 3.89346E+002 | 5.95232E+001 |
| | | 722.70 | 0.00 | | |

## I N T E R F E R E N C E  C O R R E C T E D  R E P O R T

| Nuclide Name | Nuclide Id Confidence | Wt mean Activity (uCi/kg ) | Wt mean Activity Uncertainty |
|---|---|---|---|
| CS-137 | 1.000 | 1.629751E-003 | 2.517469E-004 |
| NP-237 | 0.584 | 3.427112E-003 | 5.662985E-004 |
| AM-241 @ | 0.997 | 4.000278E+000 | 3.320710E-001 |

? = nuclide is part of an undetermined solution
X = nuclide rejected by the interference analysis
@ = nuclide contains energy lines not used in Weighted Mean Activity

Errors quoted at 1.000 sigma

**********
***** N U C L I D E  M D A  R E P O R T *****
**********

| | Nuclide Name | Energy (keV) | Yield (%) | Line MDA (uCi/kg ) | Nuclide MDA (uCi/kg ) | Activity (uCi/kg ) |
|---|---|---|---|---|---|---|
| | CO-60 | 1173.22 | 100.00 | 1.3128E-003 | 1.06E-003 | 3.4878E-004 |
| | | 1332.49 | 100.00 | 1.0551E-003 | | 1.1473E-004 |
| | CS-134 | 475.35 | 1.46 | 8.2303E-002 | 1.25E-003 | 4.7444E-003 |
| | | 563.23 | 8.38 | 1.2702E-002 | | 3.8401E-003 |
| | | 569.32 | 15.43 | 7.0796E-003 | | -5.0659E-003 |
| | | 604.70 | 97.60 | 1.5190E-003 | | -3.1204E-004 |
| | | 795.84 | 85.40 | 1.2509E-003 | | -7.3471E-004 |
| | | 801.93 | 8.73 | 1.2759E-002 | | 1.0980E-004 |
| | | 1038.57 | 1.00 | 1.1155E-001 | | -3.4507E-002 |
| | | 1167.94 | 1.80 | 7.1103E-002 | | 1.2634E-002 |
| | | 1365.15 | 3.04 | 3.5191E-002 | | 5.4789E-003 |
| + | CS-137 | 661.65* | 85.12 | 7.2127E-004 | 7.21E-004 | 1.6467E-003 |
| + | NP-237 | 300.17 | 6.20 | 2.1874E-002 | 2.13E-003 | 1.8567E-002 |
| | | 312.00* | 36.00 | 2.1260E-003 | | 3.4271E-003 |
| | | 340.60 | 4.20 | 3.0113E-002 | | 8.5023E-004 |
| | | 375.45 | 0.68 | 1.8051E-001 | | 1.2966E-001 |
| | | 415.76 | 1.75 | 7.0023E-002 | | 3.6030E-002 |
| | Pu-239 | 129.28 | 0.01 | 6.6513E+001 | 6.65E+001 | 4.2591E+001 |
| | | 375.00 | 0.00 | 7.7209E+001 | | 1.2754E+001 |
| | | 413.70 | 0.00 | 8.1687E+001 | | 3.5647E+001 |
| | | 451.50 | 0.00 | 5.8155E+002 | | 9.8743E+001 |
| + | AM-241 | 59.54* | 35.70 | 1.4749E-002 | 1.47E-002 | 4.0003E+000 |
| | | 125.28 | 0.00 | 1.0629E+002 | | -3.9160E+001 |
| | | 335.40 | 0.00 | 2.5658E+002 | | 2.3844E+002 |
| | | 662.42* | 0.00 | 1.7054E+002 | | 3.8935E+002 |
| | | 722.70 | 0.00 | 9.6095E+002 | | -3.8970E+001 |
| | PU-241 | 114.00 | 0.02 | 2.0278E+001 | 2.03E+001 | 8.4491E-001 |
| | | 332.60 | 0.00 | 4.2437E+001 | | -3.3928E+001 |
| | CM-243 | 209.70 | 3.27 | 5.0648E-002 | 9.62E-003 | 2.8532E-002 |
| | | 228.18 | 10.56 | 1.4763E-002 | | 1.1554E-003 |
| | | 277.60 | 14.00 | 9.6153E-003 | | -3.1488E-004 |

+ = Nuclide identified during the nuclide identification
* = Energy line found in the spectrum
> = MDA value not calculated
@ = Half-life too short to be able to perform the decay correction

N U C L I D E  T O T A L S

| Nuclide | Mass (g) |
|---|---|

# Bldg 233-S
## NDA Item Description Sheet
## ~~Pipe~~ Geometry

RECTANGULAR PLATE.

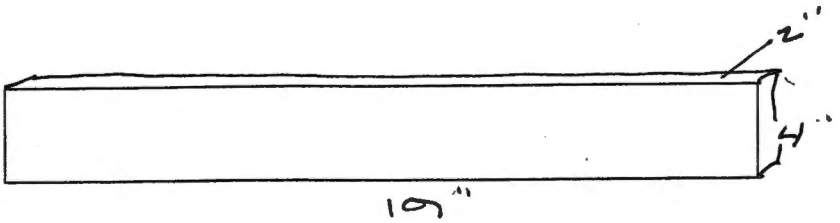


Put Dimensions on Pipe

**Item ID:** 4558

Weight (kg): 21.5 9.77

**Material Description:** 4 PIECES OF ANGLE

**Packaging:** 3 LAYERS POLY

Detector Distance (in): 24

Detector Filters: NONE

Dose Rate: <.5

Comments: SIDE A 1049
SIDE B 1050

## 233-S Item Analysis

Spreadsheet Version 3.0b

1/14/02

**Sample Info:**

**Item ID:** 4558

**File Name:** 1050

**Assay Date:** 3-Jan-02

**File Name:**

**Data Input:**

| Isotope | Activity (uCi/kg) | Meas Uncert |
|---|---|---|
| Pu-239 (129) | | |
| Pu-239 (414) | 5.26E+01 | 1.08E+01 |
| Am-241 | 1.50E+01 | 1.27E+00 |
| Np-237 | 9.47E-03 | 7.98E-04 |
| U-238 | | |
| U-235 | | |
| Cs-137 | 1.18E-03 | 1.99E-04 |
| Co-60 | | |

| Activity (uCi/kg) | Meas Uncert |
|---|---|
| | |
| | |
| | |
| | |
| | |
| | |
| | |
| | |

**Item Parameters:**

Contamination: Internal and External

Item Type: Box

Calcs: Use 1st

**Dimensions:**

Length (in): 19

Width (in): 4

Depth (in): 2

Weight (lbs): 21.5

Depth for TMU (in): 4

% Volume: 100

**Am-241 Calcs:**

| | | | | |
|---|---|---|---|---|
| Measured | 1.50E+01 | +/- | 1.51E+01 | Calc from Pu-239 |
| Calculated | 7.28E+01 | +/- | 5.61E+01 | |

**Nuclide Activities:**

| Isotope | Activity (nCi/g) | | Total Unc 1 sigma |
|---|---|---|---|
| Pu-238 | 2.13E+01 | +/- | 6.12E+00 |
| Pu-239 | 5.26E+01 | +/- | 1.51E+01 |
| Pu-240 | 2.74E+01 | +/- | 7.87E+00 |
| Pu-241 | 1.02E+02 | +/- | 2.94E+01 |
| Pu-242 | 2.77E-02 | +/- | 7.95E-03 |
| Am-241 | 7.28E+01 | +/- | 5.61E+01 |
| Np-237 | 9.47E-03 | +/- | 2.06E-03 |
| U-238 | 0.00E+00 | +/- | 0.00E+00 |
| U-235 | 0.00E+00 | +/- | 0.00E+00 |
| Cs-137 | 1.18E-03 | +/- | 3.09E-04 |
| Co-60 | 0.00E+00 | +/- | 0.00E+00 |

**Results:**

| | | | | | |
|---|---|---|---|---|---|
| **Total TRU Activity(nCi/g):** | | 1.74E+02 | +/- | 5.90E+01 | Calc from Pu-239 Act |
| **Pu (g):** | 9.57E-03 | **Pu (g) + 3 sigma TMU:** | | 1.78E-02 | |
| | | **Pu(g) + 3 sigma:** | | 1.55E-02 | |

**Comments:**

Density error is due to high metal content.

Errors:Density > 1,

**Analyst:** Martin Winterrose

**Date:** 2/11/02

```
#Date & Time: Thu Jan 03 09:17:56 2002
~g=RECTANGULAR_PLANE
~description=4558_PLATE
~comment=STEEL_PLATE
~Ccollimator=50MM-180D
~crpn=4
~Detector=7219
~Convergence in %=1            ~MDRPN=4
~Lunit=IN  ~Tunit=C  ~Dunit=G/CU.C    ~Punit=MM.HG
~at=20        ~ap=760        ~rh=50
~Energies kev=   50.000,  100.000,  128.000,  130.000,  150.000,  200.000,#
                300.000,  500.000,  700.000, 1000.000, 1400.000, 2000.000,#
               4000.000,
~Error in %=     10.000,   10.000,   10.000,   10.000,   10.000,    8.000,#
                  8.000,    6.000,    6.000,    4.000,    4.000,    4.000,#
                  4.000,
~d1.1=0.025     ~d1.2=19        ~d1.3=4         ~1mater=POLYPROP ~1den=0.91
~d2.1=0.025     ~2mater=DRYDIRT  ~2den=1.6       ~2con=0.2
~d3.1=0.25      ~3mater=304SS    ~3den=7.81
~d4.1=0.025     ~4mater=DRYDIRT  ~4den=1.6       ~4con=0.2
~d5.1=0.25      ~5mater=304SS    ~5den=7.81
~d6.1=0.025     ~6mater=DRYDIRT  ~6den=1.6       ~6con=0.2
~d7.1=0.25      ~7mater=304SS    ~7den=7.81
~d8.1=0.025     ~8mater=DRYDIRT  ~8den=1.6       ~8con=0.2
~d9.1=0.25      ~9mater=304SS    ~9den=7.81
~d10.1=0.025     ~10mater=DRYDIRT  ~10den=1.6       ~10con=0.2
~sd1=24
```

# C A N B E R R A  I S O C S  A N A L Y S I S

Report Generated On : 1/04/02 3:22:22 PM

Sample Title : 4558 Side B
Spectrum Description :
Sample Identification : 1050
Sample Size : 9.8 kg

Sample Taken On : 1/03/02 9:45:00 AM
Acquisition Started : 1/03/02 9:45:33 AM

Live Time: 1800.0 seconds Real Time: 1809.7 seconds

Energy Calibration Used Done On : 11/29/01
Efficiency Calibration Used Done On : 1/03/02

## P E A K  A N A L Y S I S  R E P O R T

| Peak No. | Peak centroid | Energy (keV) | Net Peak Area | Net Area Uncert. | Continuum Counts |
|---|---|---|---|---|---|
| 1 | 239.15 | 59.82 | 2.38E+005 | 6697.45 | 3.95E+003 |
| 2 | 340.15 | 85.07 | 9.20E+002 | 58.85 | 2.76E+003 |
| 3 | 350.23 | 87.60 | 2.87E+002 | 55.09 | 2.77E+003 |
| 4 | 378.84 | 94.75 | 1.63E+002 | 51.11 | 2.77E+003 |
| 5 | 395.72 | 98.97 | 5.39E+002 | 72.51 | 2.75E+003 |
| 6 | 518.58 | 129.69 | 2.97E+002 | 47.07 | 2.22E+003 |
| 7 | 1248.12 | 312.11 | 3.17E+002 | 22.01 | 1.81E+002 |
| 8 | 1408.20 | 352.13 | 1.16E+002 | 15.60 | 1.43E+002 |
| 9 | 1501.09 | 375.36 | 9.83E+001 | 14.54 | 1.23E+002 |
| 10 | 1656.71 | 414.27 | 6.62E+001 | 12.60 | 9.38E+001 |
| 11 | 2044.99 | 511.36 | 1.32E+002 | 15.48 | 7.12E+001 |
| 12 | 2437.56 | 609.52 | 1.51E+002 | 15.05 | 4.76E+001 |
| 13 | 2646.81 | 661.84 | 6.70E+001 | 11.08 | 4.29E+001 |
| 14 | 7063.83 | 1766.29 | 6.25E+001 | 8.96 | 1.24E+000 |

## N U C L I D E  I D E N T I F I C A T I O N  R E P O R T

| Nuclide Name | Id Confidence | Energy (keV) | Yield (%) | Activity (uCi) | Activity Uncertainty |
|---|---|---|---|---|---|
| CS-137 | 0.999 | 661.65* | 85.12 | 1.18120E-003 | 1.98934E-004 |
| NP-237 | 0.656 | 300.17 | 6.20 | | |
| | | 312.00* | 36.00 | 9.47455E-003 | 7.97933E-004 |
| | | 340.60 | 4.20 | | |
| | | 375.45* | 0.68 | 1.66576E-001 | 2.57031E-002 |
| | | 415.76* | 1.75 | 4.54956E-002 | 8.86056E-003 |
| Pu-239 | 0.963 | 129.28* | 0.01 | 5.14336E+001 | 1.18696E+001 |
| | | 375.00* | 0.00 | 7.15857E+001 | 1.19384E+001 |
| | | 413.70* | 0.00 | 5.25760E+001 | 1.08153E+001 |
| | | 451.50 @ | 0.00 | | |
| AM-241 | 0.997 | 59.54* | 35.70 | 1.50303E+001 | 1.26706E+000 |
| | | 125.28 | 0.00 | | |
| | | 335.40 | 0.00 | | |
| | | 662.42* @ | 0.00 | 2.79289E+002 | 4.70307E+001 |
| | | 722.70 | 0.00 | | |

## I N T E R F E R E N C E  C O R R E C T E D  R E P O R T

| Nuclide Name | Nuclide Id Confidence | Wt mean Activity (uCi/kg ) | Wt mean Activity Uncertainty |
|---|---|---|---|
| CS-137 | 0.999 | 1.117637E-003 | 1.989803E-004 |
| NP-237 | 0.656 | 9.430794E-003 | 7.960194E-004 |
| Pu-239 @ | 0.963 | 5.266455E+001 | 5.636451E+000 |
| AM-241 @ | 0.997 | 1.503032E+001 | 1.267065E+000 |

? = nuclide is part of an undetermined solution
X = nuclide rejected by the interference analysis
@ = nuclide contains energy lines not used in Weighted Mean Activity

Errors quoted at 1.000 sigma

```
*************************************************************************
*****              N U C L I D E   M D A   R E P O R T              *****
*************************************************************************
```

| | Nuclide Name | Energy (keV) | Yield (%) | Line MDA (uCi/kg ) | Nuclide MDA (uCi/kg ) | Activity (uCi/kg ) |
|---|---|---|---|---|---|---|
| | CO-60 | 1173.22 | 100.00 | 1.0187E-003 | 8.84E-004 | 1.5600E-004 |
| | | 1332.49 | 100.00 | 8.8367E-004 | | 8.1640E-004 |
| | CS-134 | 475.35 | 1.46 | 6.4708E-002 | 1.06E-003 | 3.4571E-002 |
| | | 563.23 | 8.38 | 1.0907E-002 | | -3.3006E-003 |
| | | 569.32 | 15.43 | 6.0467E-003 | | 1.1740E-004 |
| | | 604.70 | 97.60 | 1.2784E-003 | | -2.0337E-004 |
| | | 795.84 | 85.40 | 1.0554E-003 | | 2.0528E-004 |
| | | 801.93 | 8.73 | 1.0598E-002 | | -8.6155E-003 |
| | | 1038.57 | 1.00 | 9.3415E-002 | | -1.1398E-002 |
| | | 1167.94 | 1.80 | 5.5217E-002 | | 2.9211E-002 |
| | | 1365.15 | 3.04 | 2.3962E-002 | | -5.5263E-003 |
| + | CS-137 | 661.65* | 85.12 | 5.8537E-004 | 5.85E-004 | 1.1812E-003 |
| + | NP-237 | 300.17 | 6.20 | 2.1231E-002 | 1.95E-003 | 9.1910E-003 |
| | | 312.00* | 36.00 | 1.9489E-003 | | 9.4746E-003 |
| | | 340.60 | 4.20 | 2.9332E-002 | | 2.9592E-002 |
| | | 375.45* | 0.68 | 9.2054E-002 | | 1.6658E-001 |
| | | 415.76* | 1.75 | 3.2817E-002 | | 4.5496E-002 |
| + | Pu-239 | 129.28* | 0.01 | 3.8417E+001 | 3.79E+001 | 5.1434E+001 |
| | | 375.00* | 0.00 | 3.9560E+001 | | 7.1586E+001 |
| | | 413.70* | 0.00 | 3.7924E+001 | | 5.2576E+001 |
| | | 451.50 | 0.00 | 4.9106E+002 | | 8.7201E+001 |
| + | AM-241 | 59.54* | 35.70 | 1.8609E-002 | 1.86E-002 | 1.5030E+001 |
| | | 125.28 | 0.00 | 1.0621E+002 | | -1.6258E+001 |
| | | 335.40 | 0.00 | 2.3402E+002 | | -1.7387E+002 |
| | | 662.42* | 0.00 | 1.3841E+002 | | 2.7929E+002 |
| | | 722.70 | 0.00 | 7.2729E+002 | | 6.4431E+002 |
| | PU-241 | 114.00 | 0.02 | 2.0432E+001 | 2.04E+001 | 1.6991E+001 |
| | | 332.60 | 0.00 | 3.8918E+001 | | -2.4546E+000 |
| | CM-243 | 209.70 | 3.27 | 4.9337E-002 | 8.91E-003 | 1.6889E-002 |
| | | 228.18 | 10.56 | 1.3285E-002 | | 5.9772E-003 |
| | | 277.60 | 14.00 | 8.9056E-003 | | 3.9103E-003 |

+ = Nuclide identified during the nuclide identification
* = Energy line found in the spectrum
> = MDA value not calculated
@ = Half-life too short to be able to perform the decay correction

## N U C L I D E  T O T A L S

| Nuclide | Mass (g) |
|---|---|
| Pu-239 | 8.30E-003 +/- 8.88E-004 |

# Bldg 233-S
# NDA Item Description Sheet
# Pipe Geometry

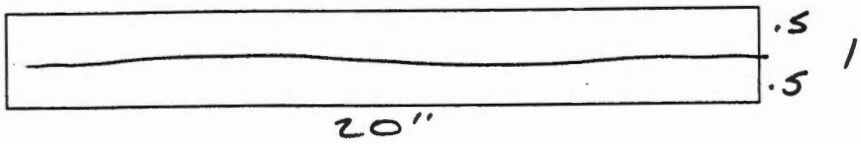


Put Dimensions on Pipe

**Item ID:** 4769

Weight (kg): 3.5 LBS 1.59

**Material Description:** 2 1/2" PIPES

**Packaging:** 3 LAYERS POLY

Detector Distance (in): 24

Detector Filters: NONE

Dose Rate: 2.6

Comments: SIDE A 1051
SIDE B 1052

## 233-S Item Analysis

Spreadsheet Version 3.0b

1/14/02

**Sample Info:**

**Item ID:** 4769

**File Name:** 1052

**Assay Date:** 3-Jan-02

**File Name:**

**Data Input:**

| Isotope | Activity (uCi/kg) | Meas Uncert | Activity (uCi/kg) | Meas Uncert |
|---|---|---|---|---|
| Pu-239 (129) | 2.34E+02 | | | |
| Pu-239 (414) | | | | |
| Am-241 | 3.00E+01 | 2.47E+00 | | |
| Np-237 | | | | |
| U-238 | | | | |
| U-235 | | | | |
| Cs-137 | 6.37E-03 | 9.36E-04 | | |
| Co-60 | | | | |

**Item Parameters:**

Contamination: Internal

Item Type: Pipe or Duct

Calcs: Use 1st

**Dimensions:**

Length (in): 20

Weight (lbs): 3.5

Width (in): 1

Depth for TMU (in): 4

Depth (in): 1

% Volume: 100

**Am-241 Calcs:**

| | | | | |
|---|---|---|---|---|
| Measured | 3.00E+01 | +/- | 1.36E+01 | Use Meas |
| Calculated | 3.24E+02 | +/- | 2.04E+02 | |

**Nuclide Activities:**

| Isotope | Activity (nCi/g) | | Total Unc 1 sigma |
|---|---|---|---|
| Pu-238 | 9.48E+01 | +/- | 2.13E+01 |
| Pu-239 | 2.34E+02 | +/- | 5.25E+01 |
| Pu-240 | 1.22E+02 | +/- | 2.74E+01 |
| Pu-241 | 4.56E+02 | +/- | 1.02E+02 |
| Pu-242 | 1.23E-01 | +/- | 2.76E-02 |
| Am-241 | 3.00E+01 | +/- | 1.36E+01 |
| Np-237 | 0.00E+00 | +/- | 0.00E+00 |
| U-238 | 0.00E+00 | +/- | 0.00E+00 |
| U-235 | 0.00E+00 | +/- | 0.00E+00 |
| Cs-137 | 6.37E-03 | +/- | 1.18E-03 |
| Co-60 | 0.00E+00 | +/- | 0.00E+00 |

**Results:**

| | | | | |
|---|---|---|---|---|
| **Total TRU Activity(nCi/g):** | | 1.00E+02 | +/- | 4.55E+01 | Calc from Am-241 Act |
| **Pu (g):** | 6.93E-03 | **Pu (g) + 3 sigma TMU:** | | 1.16E-02 | |
| | | **Pu(g) + 3 sigma:** | | 6.93E-03 | |

**Comments:**

Pu MDA Value used.

**Errors:**

**Analyst:** Martin Winterrose

**Date:** 1/24/02

```
#Date & Time: Thu Jan 03 10:28:57 2002
~g=PIPE
~description=4769_PIPES
~comment=1"_PIPE
~Ccollimator=50MM-180D
~crpn=4
~Detector=7219
~Convergence in %=1            ~MDRPN=4
~Lunit=IN  ~Tunit=C  ~Dunit=G/CU.C    ~Punit=MM.HG
~at=20        ~ap=760       ~rh=50
~Energies kev=   50.000,  100.000,  128.000,  130.000,  150.000,  200.000,#
                300.000,  500.000,  700.000, 1000.000, 1400.000, 2000.000,#
               4000.000,
~Error in %=     10.000,   10.000,   10.000,   10.000,   10.000,    8.000,#
                  8.000,    6.000,    6.000,    4.000,    4.000,    4.000,#
                  4.000,
~d1.1=0.109     ~d1.2=1         ~d1.3=10        ~d1.4=10        ~1mater=304SS
~d2.1=0.109     ~d2.2=10        ~d2.3=10        ~2mater=DRYDIRT  ~2den=1.2
~d3.1=0.75      ~d3.2=10        ~d3.3=10        ~3mater=DRYAIR   ~3den=0.00129
~sd1=24
```

# C A N B E R R A  I S O C S  A N A L Y S I S

Report Generated On : 1/04/02 3:32:50 PM

Sample Title : 4769 Side B
Spectrum Description :
Sample Identification : 1052
Sample Size : 1.6 kg

Sample Taken On : 1/03/02 10:49:00 AM
Acquisition Started : 1/03/02 10:50:11 AM

Live Time: 1800.0 seconds Real Time: 1802.5 seconds

Energy Calibration Used Done On : 11/29/01
Efficiency Calibration Used Done On : 1/03/02

## P E A K  A N A L Y S I S  R E P O R T

| Peak No. | Peak centroid | Energy (keV) | Net Peak Area | Net Area Uncert. | Continuum Counts |
|---|---|---|---|---|---|
| 1 | 239.19 | 59.83 | 1.30E+004 | 281.59 | 1.86E+003 |
| 2 | 340.02 | 85.04 | 8.26E+002 | 57.63 | 2.40E+003 |
| 3 | 352.13 | 88.07 | 2.96E+002 | 50.63 | 2.42E+003 |
| 4 | 444.91 | 111.27 | 1.42E+002 | 46.30 | 2.38E+003 |
| 5 | 1407.95 | 352.07 | 9.19E+001 | 14.52 | 1.28E+002 |
| 6 | 2042.68 | 510.78 | 1.22E+002 | 14.08 | 6.74E+001 |
| 7 | 2437.48 | 609.50 | 1.57E+002 | 14.91 | 5.16E+001 |
| 8 | 2646.39 | 661.73 | 8.10E+001 | 11.62 | 4.38E+001 |
| 9 | 3644.05 | 911.19 | 6.12E+001 | 10.39 | 2.75E+001 |
| 10 | 7064.17 | 1766.37 | 4.23E+001 | 7.67 | 6.30E-001 |

## N U C L I D E  I D E N T I F I C A T I O N  R E P O R T

| Nuclide Name | Id Confidence | Energy (keV) | Yield (%) | Activity (uCi) | Activity Uncertainty |
|---|---|---|---|---|---|
| CS-137 | 1.000 | 661.65* | 85.12 | 6.36987E-003 | 9.35911E-004 |
| AM-241 | 0.996 | 59.54* | 35.70 | 3.00246E+001 | 2.47367E+000 |
| | | 125.28 | 0.00 | | |
| | | 335.40 | 0.00 | | |
| | | 662.42* @ | 0.00 | 1.50612E+003 | 2.21254E+002 |
| | | 722.70 | 0.00 | | |

## I N T E R F E R E N C E  C O R R E C T E D  R E P O R T

| Nuclide Name | Nuclide Id Confidence | Wt mean Activity (uCi/kg ) | Wt mean Activity Uncertainty |
|---|---|---|---|
| CS-137 | 1.000 | 6.242891E-003 | 9.358113E-004 |
| AM-241 @ | 0.996 | 3.002457E+001 | 2.473670E+000 |

? = nuclide is part of an undetermined solution
X = nuclide rejected by the interference analysis
@ = nuclide contains energy lines not used in Weighted Mean Activity

Errors quoted at 1.000 sigma

**********
***** N U C L I D E  M D A  R E P O R T *****
**********

| | Nuclide Name | Energy (keV) | Yield (%) | Line MDA (uCi/kg ) | Nuclide MDA (uCi/kg ) | Activity (uCi/kg ) |
|---|---|---|---|---|---|---|
| | CO-60 | 1173.22 | 100.00 | 4.3214E-003 | 3.69E-003 | -2.8396E-003 |
| | | 1332.49 | 100.00 | 3.6851E-003 | | 6.6302E-004 |
| | CS-134 | 475.35 | 1.46 | 2.8513E-001 | 4.83E-003 | -5.1495E-002 |
| | | 563.23 | 8.38 | 4.7505E-002 | | 8.5040E-003 |
| | | 569.32 | 15.43 | 2.6641E-002 | | -1.1408E-002 |
| | | 604.70 | 97.60 | 5.6466E-003 | | -2.9523E-004 |
| | | 795.84 | 85.40 | 4.8301E-003 | | 1.2893E-003 |
| | | 801.93 | 8.73 | 4.8266E-002 | | 3.8074E-002 |
| | | 1038.57 | 1.00 | 3.8564E-001 | | -1.3052E-002 |
| | | 1167.94 | 1.80 | 2.3347E-001 | | 6.1987E-002 |
| | | 1365.15 | 3.04 | 1.1491E-001 | | 8.9251E-002 |
| + | CS-137 | 661.65* | 85.12 | 2.6348E-003 | 2.63E-003 | 6.3699E-003 |
| | NP-237 | 300.17 | 6.20 | 7.5539E-002 | 1.23E-002 | -4.6090E-002 |
| | | 312.00 | 36.00 | 1.2253E-002 | | 2.4955E-003 |
| | | 340.60 | 4.20 | 1.0820E-001 | | -1.7982E-002 |
| | | 375.45 | 0.68 | 6.2782E-001 | | -3.5649E-001 |
| | | 415.76 | 1.75 | 2.4193E-001 | | -1.6889E-001 |
| | Pu-239 | 129.28 | 0.01 | 2.3356E+002 | 2.34E+002 | -1.6331E+001 |
| | | 375.00 | 0.00 | 2.7318E+002 | | 7.0414E+001 |
| | | 413.70 | 0.00 | 2.7589E+002 | | -2.3684E+002 |
| | | 451.50 | 0.00 | 2.1749E+003 | | -1.1682E+003 |
| + | AM-241 | 59.54* | 35.70 | 4.7125E-001 | 4.71E-001 | 3.0025E+001 |
| | | 125.28 | 0.00 | 3.8506E+002 | | 1.0389E+002 |
| | | 335.40 | 0.00 | 8.8154E+002 | | -3.0052E+001 |
| | | 662.42* | 0.00 | 6.2297E+002 | | 1.5061E+003 |
| | | 722.70 | 0.00 | 3.3075E+003 | | 2.7603E+003 |
| | PU-241 | 114.00 | 0.02 | 7.9278E+001 | 7.93E+001 | -2.5451E+001 |
| | | 332.60 | 0.00 | 1.5178E+002 | | -3.2587E+001 |
| | CM-243 | 209.70 | 3.27 | 1.6591E-001 | 3.30E-002 | 1.0298E-001 |
| | | 228.18 | 10.56 | 4.6844E-002 | | -1.2649E-002 |
| | | 277.60 | 14.00 | 3.3022E-002 | | 1.3261E-002 |

+ = Nuclide identified during the nuclide identification
* = Energy line found in the spectrum
> = MDA value not calculated
@ = Half-life too short to be able to perform the decay correction

N U C L I D E  T O T A L S

| Nuclide | Mass (g) |
|---|---|

# Bldg 233-S
# NDA Item Description Sheet
# ~~Pipe~~ Geometry
RECTANGULAR

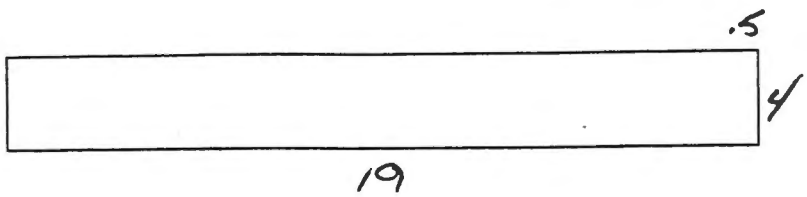


Put Dimensions on Pipe

**Item ID:** 4910

Weight (kg): 13.5

**Material Description:** 2 1/4" PLATES

**Packaging:** 3 LAYERS

Detector Distance (in): 24

Detector Filters: NONE

Dose Rate: <5

Comments: 1 900 1055
2 1800 1056

**233-S Item Analysis** Spreadsheet Version 3.0b 1/14/02

**Sample Info:**

| | | | |
|---|---|---|---|
| **Item ID:** | 4910 | **Assay Date:** | 3-Jan-02 |
| **File Name:** | 1056 | **File Name:** | |

**Data Input:**

| Isotope | Activity (uCi/kg) | Meas Uncert | Activity (uCi/kg) | Meas Uncert |
|---|---|---|---|---|
| Pu-239 (129) | 2.65E+01 | 8.95E+00 | | |
| Pu-239 (414) | | | | |
| Am-241 | 6.87E+00 | 5.73E-01 | | |
| Np-237 | 4.01E-03 | 5.79E-04 | | |
| U-238 | | | | |
| U-235 | | | | |
| Cs-137 | 1.34E-03 | 2.33E-04 | | |
| Co-60 | | | | |

**Item Parameters:**

Contamination: Internal and External Item Type: Box Calcs: Use 1st

**Dimensions:**

| | | | | | |
|---|---|---|---|---|---|
| Length (in): | 19 | Width (in): | 4 | Depth (in): | 0.5 |
| Weight (lbs): | 10 | Depth for TMU (in): | 4 | % Volume: | 100 |

**Am-241 Calcs:**

| | | | | |
|---|---|---|---|---|
| Measured | 6.87E+00 | +/- | 6.89E+00 | Calc from Pu-239 |
| Calculated | 3.67E+01 | +/- | 4.88E+01 | |

**Nuclide Activities:**

| Isotope | Activity (nCi/g) | | Total Unc 1 sigma |
|---|---|---|---|
| Pu-238 | 1.07E+01 | +/- | 5.63E+00 |
| Pu-239 | 2.65E+01 | +/- | 1.39E+01 |
| Pu-240 | 1.38E+01 | +/- | 7.23E+00 |
| Pu-241 | 5.16E+01 | +/- | 2.70E+01 |
| Pu-242 | 1.39E-02 | +/- | 7.31E-03 |
| Am-241 | 3.67E+01 | +/- | 4.88E+01 |
| Np-237 | 4.01E-03 | +/- | 9.89E-04 |
| U-238 | 0.00E+00 | +/- | 0.00E+00 |
| U-235 | 0.00E+00 | +/- | 0.00E+00 |
| Cs-137 | 1.34E-03 | +/- | 3.55E-04 |
| Co-60 | 0.00E+00 | +/- | 0.00E+00 |

**Results:**

| | | | | | |
|---|---|---|---|---|---|
| **Total TRU Activity(nCi/g):** | | 8.77E+01 | +/- | 5.15E+01 | Calc from Pu-239 Act |
| **Pu (g):** | 2.24E-03 | **Pu (g) + 3 sigma TMU:** | | 5.77E-03 | |
| | | **Pu(g) + 3 sigma:** | | 4.52E-03 | |

**Comments:**

Error due to geometry.

Errors:Density > 1,

**Analyst:** Martin Winterrose **Date:** 2/11/02

```
#Date & Time: Thu Jan 03 12:41:04 2002
~g=RECTANGULAR_PLANE
~description=4910_PLATE
~comment=2_1/4"_PLATES
~Ccollimator=50MM-180D
~crpn=4
~Detector=7219
~Convergence in %=1            ~MDRPN=4
~Lunit=IN  ~Tunit=C  ~Dunit=G/CU.C    ~Punit=MM.HG
~at=20        ~ap=760       ~rh=50
~Energies kev=   50.000,  100.000,  128.000,  130.000,  150.000,  200.000,#
                300.000,  500.000,  700.000, 1000.000, 1400.000, 2000.000,#
               4000.000,
~Error in %=     10.000,   10.000,   10.000,   10.000,   10.000,    8.000,#
                  8.000,    6.000,    6.000,    4.000,    4.000,    4.000,#
                  4.000,
~d1.1=0.024     ~d1.2=19        ~d1.3=4         ~1mater=POLYPROP ~1den=0.91
~d2.1=0.024     ~2mater=POLYPROP ~2den=0.91
~d3.1=0.024     ~3mater=DRYDIRT  ~3den=1.6       ~3con=0.333
~d4.1=0.25      ~4mater=304SS    ~4den=7.81
~d5.1=0.024     ~5mater=DRYDIRT  ~5den=1.6       ~5con=0.333
~d6.1=0.25      ~6mater=304SS    ~6den=7.81
~d7.1=0.024     ~7mater=DRYDIRT  ~7den=1.6       ~7con=0.333
~d8.1=0.024     ~8mater=POLYPROP ~8den=0.91
~sd1=24
```

## C A N B E R R A  I S O C S  A N A L Y S I S

Report Generated On : 1/03/02 1:16:50 PM

Sample Title : 4910 Side B
Spectrum Description :
Sample Identification : 1056
Sample Size : 6.1 kg

Sample Taken On : 1/03/02 1:00:00 PM
Acquisition Started : 1/03/02 1:01:42 PM

Live Time: 1800.0 seconds Real Time: 1805.7 seconds

ISOCS Calabration : 4910 PLATE
Energy Calibration Used Done On : 11/29/01
Efficiency Calibration Used Done On : 1/03/02

## P E A K  A N A L Y S I S  R E P O R T

| Peak No. | Peak centroid | Energy (keV) | Net Peak Area | Net Area Uncert. | Continuum Counts |
|---|---|---|---|---|---|
| 1 | 239.15 | 59.82 | 1.14E+005 | 2920.33 | 2.98E+003 |
| 2 | 340.02 | 85.04 | 8.25E+002 | 71.49 | 2.69E+003 |
| 3 | 351.26 | 87.85 | 2.24E+002 | 55.22 | 2.71E+003 |
| 4 | 413.99 | 103.54 | 1.42E+002 | 54.41 | 2.66E+003 |
| 5 | 445.31 | 111.37 | 1.29E+002 | 47.95 | 2.56E+003 |
| 6 | 463.64 | 115.95 | 1.35E+002 | 48.74 | 2.49E+003 |
| 7 | 518.68 | 129.72 | 1.54E+002 | 45.02 | 2.19E+003 |
| 8 | 1248.83 | 312.28 | 1.21E+002 | 16.50 | 1.66E+002 |
| 9 | 1408.27 | 352.15 | 8.95E+001 | 14.89 | 1.35E+002 |
| 10 | 2043.75 | 511.05 | 1.28E+002 | 14.57 | 6.62E+001 |
| 11 | 2436.71 | 609.30 | 1.31E+002 | 13.87 | 4.73E+001 |
| 12 | 2646.07 | 661.65 | 6.40E+001 | 10.88 | 5.25E+001 |
| 13 | 3644.93 | 911.41 | 5.70E+001 | 9.56 | 2.28E+001 |
| 14 | 7061.79 | 1765.78 | 4.90E+001 | 8.26 | 1.32E+000 |

## NUCLIDE IDENTIFICATION REPORT

| Nuclide Name | Id Confidence | Energy (keV) | Yield (%) | Activity (uCi) | Activity Uncertainty |
|---|---|---|---|---|---|
| CS-137 | 1.000 | 661.65* | 85.12 | 1.34377E-003 | 2.32518E-004 |
| NP-237 | 0.582 | 300.17 | 6.20 | | |
| | | 312.00* | 36.00 | 4.00595E-003 | 5.79375E-004 |
| | | 340.60 | 4.20 | | |
| | | 375.45 | 0.68 | | |
| | | 415.76 | 1.75 | | |
| Pu-239 | 0.481 | 129.28* | 0.01 | 2.65182E+001 | 8.95165E+000 |
| | | 375.00 | 0.00 | | |
| | | 413.70 | 0.00 | | |
| | | 451.50 @ | 0.00 | | |
| AM-241 | 0.997 | 59.54* | 35.70 | 6.86605E+000 | 5.73156E-001 |
| | | 125.28 | 0.00 | | |
| | | 335.40 | 0.00 | | |
| | | 662.42* @ | 0.00 | 3.17728E+002 | 5.49710E+001 |
| | | 722.70 | 0.00 | | |
| PU-241 | 0.702 | 114.00* | 0.02 | 6.51969E+000 | 2.37824E+000 |
| | | 332.60 | 0.00 | | |

## INTERFERENCE CORRECTED REPORT

| Nuclide Name | Nuclide Id Confidence | Wt mean Activity (uCi/kg ) | Wt mean Activity Uncertainty |
|---|---|---|---|
| CS-137 | 1.000 | 1.314736E-003 | 2.325026E-004 |
| NP-237 | 0.582 | 4.005947E-003 | 5.793752E-004 |
| Pu-239 @ | 0.481 | 2.651819E+001 | 8.951649E+000 |
| AM-241 @ | 0.997 | 6.866050E+000 | 5.731563E-001 |
| PU-241 | 0.702 | 6.519686E+000 | 2.378240E+000 |

? = nuclide is part of an undetermined solution
X = nuclide rejected by the interference analysis
@ = nuclide contains energy lines not used in Weighted Mean Activity

Errors quoted at 1.000 sigma

**********
***** N U C L I D E  M D A  R E P O R T *****
**********

| | Nuclide Name | Energy (keV) | Yield (%) | Line MDA (uCi/kg ) | Nuclide MDA (uCi/kg ) | Activity (uCi/kg ) |
|---|---|---|---|---|---|---|
| | CO-60 | 1173.22 | 100.00 | 1.2214E-003 | 1.05E-003 | 6.9170E-004 |
| | | 1332.49 | 100.00 | 1.0464E-003 | | 5.6606E-004 |
| | CS-134 | 475.35 | 1.46 | 7.7768E-002 | 1.22E-003 | 7.8934E-003 |
| | | 563.23 | 8.38 | 1.3049E-002 | | 3.0732E-003 |
| | | 569.32 | 15.43 | 7.2201E-003 | | 2.0595E-003 |
| | | 604.70 | 97.60 | 1.4894E-003 | | -8.9268E-005 |
| | | 795.84 | 85.40 | 1.2175E-003 | | 1.1158E-004 |
| | | 801.93 | 8.73 | 1.3245E-002 | | 4.3539E-003 |
| | | 1038.57 | 1.00 | 1.1608E-001 | | -7.3137E-003 |
| | | 1167.94 | 1.80 | 6.5379E-002 | | 6.9602E-002 |
| | | 1365.15 | 3.04 | 3.0624E-002 | | -6.3051E-003 |
| + | CS-137 | 661.65* | 85.12 | 7.6557E-004 | 7.66E-004 | 1.3438E-003 |
| + | NP-237 | 300.17 | 6.20 | 2.1688E-002 | 2.08E-003 | 4.5798E-003 |
| | | 312.00* | 36.00 | 2.0756E-003 | | 4.0059E-003 |
| | | 340.60 | 4.20 | 3.1688E-002 | | 4.1469E-003 |
| | | 375.45 | 0.68 | 1.7650E-001 | | 1.9752E-002 |
| | | 415.76 | 1.75 | 6.5197E-002 | | -4.2303E-002 |
| + | Pu-239 | 129.28* | 0.01 | 3.8056E+001 | 3.81E+001 | 2.6518E+001 |
| | | 375.00 | 0.00 | 7.6102E+001 | | 2.0120E+001 |
| | | 413.70 | 0.00 | 7.5389E+001 | | -4.3061E+000 |
| | | 451.50 | 0.00 | 5.9256E+002 | | -1.0903E+002 |
| + | AM-241 | 59.54* | 35.70 | 1.5410E-002 | 1.54E-002 | 6.8660E+000 |
| | | 125.28 | 0.00 | 1.0306E+002 | | -3.6360E+001 |
| | | 335.40 | 0.00 | 2.5829E+002 | | 1.3804E+002 |
| | | 662.42* | 0.00 | 1.8102E+002 | | 3.1773E+002 |
| | | 722.70 | 0.00 | 8.9995E+002 | | 1.3857E+002 |
| + | PU-241 | 114.00* | 0.02 | 1.1327E+001 | 1.13E+001 | 6.5197E+000 |
| | | 332.60 | 0.00 | 4.2979E+001 | | 9.9559E+000 |
| | CM-243 | 209.70 | 3.27 | 4.9773E-002 | 9.27E-003 | -4.2382E-003 |
| | | 228.18 | 10.56 | 1.4265E-002 | | -2.7763E-003 |
| | | 277.60 | 14.00 | 9.2711E-003 | | -1.4128E-003 |

+ = Nuclide identified during the nuclide identification
* = Energy line found in the spectrum
> = MDA value not calculated
@ = Half-life too short to be able to perform the decay correction

N U C L I D E  T O T A L S

| Nuclide | Mass (g) |
|---|---|
| Pu-239 | 2.63E-003 +/- 8.87E-004 |

# Bldg 233-S
# NDA Item Description Sheet
# ~~Pipe~~ Geometry
PLATE

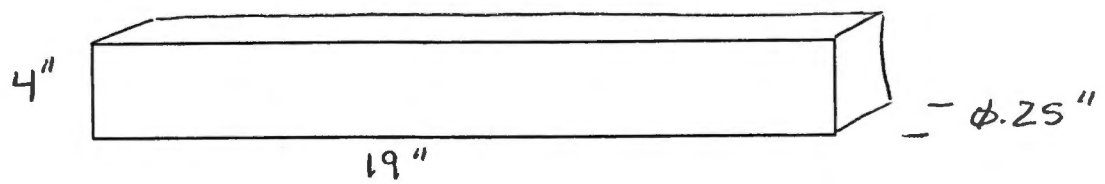


Put Dimensions on ~~Pipe~~ PLATE

**Item ID:** 4891

Weight (kg): 12 lb 5.45 Kg

**Material Description:** 1/4 PLATE

**Packaging:** 3 LAYERS POLY

Detector Distance (in): 24"

Detector Filters: NONE

Dose Rate: < ϕ.5 mR/hr

Comments: SIDE A 900sec 1071
SIDE B 1800s 1072

## 233-S Item Analysis

Spreadsheet Version 3.0b

1/14/02

**Sample Info:**

**Item ID:** 4891

**File Name:** 1072

**Assay Date:** 9-Jan-02

**File Name:**

**Data Input:**

| Isotope | Activity (uCi/kg) | Meas Uncert |
|---|---|---|
| Pu-239 (129) | 2.30E+01 | 7.44E+00 |
| Pu-239 (414) | | |
| Am-241 | 3.69E+00 | 3.13E-01 |
| Np-237 | 2.91E-03 | 4.85E-04 |
| U-238 | | |
| U-235 | | |
| Cs-137 | 1.24E-03 | 2.15E-04 |
| Co-60 | | |

| Activity (uCi/kg) | Meas Uncert |
|---|---|
| | |
| | |
| | |
| | |
| | |
| | |
| | |
| | |

**Item Parameters:**

Contamination: Surface only

Item Type: Box

Calcs: Use 1st

**Dimensions:**

Length (in): 19

Width (in): 4

Depth (in): 0.25

Weight (lbs): 12

Depth for TMU (in): 4

% Volume: 100

**Am-241 Calcs:**

| | | | | |
|---|---|---|---|---|
| Measured | 3.69E+00 | +/- | 9.75E-01 | Calc from Pu-239 |
| Calculated | 3.18E+01 | +/- | 2.97E+01 | |

**Nuclide Activities:**

| Isotope | Activity (nCi/g) | | Total Unc 1 sigma |
|---|---|---|---|
| Pu-238 | 9.30E+00 | +/- | 3.33E+00 |
| Pu-239 | 2.30E+01 | +/- | 8.21E+00 |
| Pu-240 | 1.20E+01 | +/- | 4.28E+00 |
| Pu-241 | 4.47E+01 | +/- | 1.60E+01 |
| Pu-242 | 1.21E-02 | +/- | 4.32E-03 |
| Am-241 | 3.18E+01 | +/- | 2.97E+01 |
| Np-237 | 2.91E-03 | +/- | 5.65E-04 |
| U-238 | 0.00E+00 | +/- | 0.00E+00 |
| U-235 | 0.00E+00 | +/- | 0.00E+00 |
| Cs-137 | 1.24E-03 | +/- | 2.48E-04 |
| Co-60 | 0.00E+00 | +/- | 0.00E+00 |

**Results:**

| | | | | |
|---|---|---|---|---|
| **Total TRU Activity(nCi/g):** | 7.60E+01 | +/- | 3.13E+01 | Calc from Pu-239 Act |
| **Pu (g):** | 2.33E-03 | **Pu (g) + 3 sigma TMU:** | 4.83E-03 | |
| | | **Pu(g) + 3 sigma:** | 4.60E-03 | |

**Comments:**

Error due to geometry.

Errors:Density > 1,

**Analyst:** Martin Winterrose

**Date:** 2/11/02

```
#Date & Time: Wed Jan 09 13:18:49 2002
~g=RECTANGULAR_PLANE
~description=4891_PLATE
~comment=STEEL_PLATE
~Ccollimator=50MM-180D
~crpn=4
~Detector=7219
~Convergence in %=1            ~MDRPN=4
~Lunit=IN  ~Tunit=C  ~Dunit=G/CU.C    ~Punit=MM.HG
~at=20        ~ap=760       ~rh=50
~Energies kev=   50.000,  100.000,  128.000,  130.000,  150.000,  200.000,#
                300.000,  500.000,  700.000, 1000.000, 1400.000, 2000.000,#
               4000.000,
~Error in %=     10.000,   10.000,   10.000,   10.000,   10.000,    8.000,#
                  8.000,    6.000,    6.000,    4.000,    4.000,    4.000,#
                  4.000,
~d1.1=0.025     ~d1.2=19        ~d1.3=4         ~1mater=POLYPROP ~1den=0.91
~d2.1=0.024     ~2mater=POLYPROP ~2den=0.91
~d3.1=0.025     ~3mater=DRYDIRT  ~3den=1.6       ~3con=0.5
~d4.1=0.25      ~4mater=304SS    ~4den=7.81
~d5.1=0.025     ~5mater=DRYDIRT  ~5den=1.6       ~5con=0.5
~d6.1=0.024     ~6mater=POLYPROP ~6den=0.91
~sd1=24
```

## C A N B E R R A  I S O C S  A N A L Y S I S

Report Generated On : 1/09/02 1:58:14 PM

Sample Title : 4891 side B
Spectrum Description :
Sample Identification : 1072
Sample Size : 5.4 kg

Sample Taken On : 1/09/02 1:42:00 PM
Acquisition Started : 1/09/02 1:43:07 PM

Live Time: 1800.0 seconds Real Time: 1804.7 seconds

ISOCS Calabration : 4891 PLATE
Energy Calibration Used Done On : 2/27/01
Efficiency Calibration Used Done On : 1/09/02

## P E A K  A N A L Y S I S  R E P O R T

| Peak No. | Peak centroid | Energy (keV) | Net Peak Area | Net Area Uncert. | Continuum Counts |
|---|---|---|---|---|---|
| 1 | 239.34 | 59.92 | 8.28E+004 | 2433.47 | 2.12E+003 |
| 2 | 340.37 | 85.17 | 7.92E+002 | 56.61 | 2.12E+003 |
| 3 | 350.59 | 87.72 | 2.82E+002 | 50.56 | 2.14E+003 |
| 4 | 396.26 | 99.14 | 2.54E+002 | 47.42 | 2.17E+003 |
| 5 | 413.76 | 103.51 | 2.16E+002 | 46.08 | 2.15E+003 |
| 6 | 457.80 | 114.52 | 1.21E+002 | 44.91 | 2.20E+003 |
| 7 | 519.07 | 129.83 | 1.64E+002 | 45.53 | 1.92E+003 |
| 8 | 1249.02 | 312.26 | 9.67E+001 | 15.41 | 1.33E+002 |
| 9 | 1409.37 | 352.33 | 8.74E+001 | 13.63 | 1.04E+002 |
| 10 | 1500.94 | 375.22 | 3.47E+001 | 10.78 | 9.11E+001 |
| 11 | 2044.65 | 511.10 | 1.25E+002 | 15.10 | 6.29E+001 |
| 12 | 2438.50 | 609.53 | 1.09E+002 | 12.66 | 4.52E+001 |
| 13 | 2649.47 | 662.26 | 6.18E+001 | 10.51 | 3.31E+001 |
| 14 | 7068.59 | 1766.68 | 3.57E+001 | 7.17 | 7.42E-001 |

## NUCLIDE IDENTIFICATION REPORT

| Nuclide Name | Id Confidence | Energy (keV) | Yield (%) | Activity (uCi) | Activity Uncertainty |
|---|---|---|---|---|---|
| CS-137 | 0.985 | 661.65* | 85.12 | 1.24315E-003 | 2.14870E-004 |
| NP-237 | 0.604 | 300.17 | 6.20 | | |
| | | 312.00* | 36.00 | 2.91207E-003 | 4.84514E-004 |
| | | 340.60 | 4.20 | | |
| | | 375.00* | 0.68 | 6.14789E-002 | 1.92702E-002 |
| | | 415.60 | 1.75 | | |
| Pu-239 | 0.742 | 129.28* | 0.01 | 2.29527E+001 | 7.43929E+000 |
| | | 375.00* | 0.00 | 2.64203E+001 | 8.44835E+000 |
| | | 413.70 | 0.00 | | |
| | | 451.50 @ | 0.00 | | |
| AM-241 | 0.994 | 59.54* | 35.70 | 3.69429E+000 | 3.12970E-001 |
| | | 125.28 | 0.00 | | |
| | | 335.40 | 0.00 | | |
| | | 662.42* @ | 0.00 | 2.93937E+002 | 5.07985E+001 |
| | | 722.70 | 0.00 | | |
| PU-241 | 0.830 | 114.00* | 0.02 | 4.68176E+000 | 1.75192E+000 |
| | | 332.60 | 0.00 | | |

## INTERFERENCE CORRECTED REPORT

| Nuclide Name | Nuclide Id Confidence | Wt mean Activity (uCi/kg ) | Wt mean Activity Uncertainty |
|---|---|---|---|
| CS-137 | 0.985 | 1.227529E-003 | 2.148475E-004 |
| NP-237 | 0.604 | 2.914098E-003 | 4.844185E-004 |
| Pu-239 @ | 0.742 | 2.378961E+001 | 5.090575E+000 |
| AM-241 @ | 0.994 | 3.694288E+000 | 3.129702E-001 |
| PU-241 | 0.830 | 4.681756E+000 | 1.751918E+000 |

? = nuclide is part of an undetermined solution
X = nuclide rejected by the interference analysis
@ = nuclide contains energy lines not used in Weighted Mean Activity

Errors quoted at 1.000 sigma

# Bldg 233-S
# NDA Item Description Sheet
# ~~Pipe~~ Geometry
RECTANGULAR

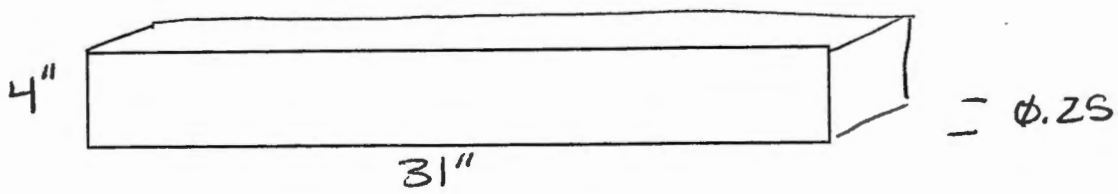


Put Dimensions on ~~Pipe~~ PLATE

**Item ID:** 4908

Weight (kg): 10 lb 4.54 Kg

**Material Description:** Ø.25" STEEL PLATE

**Packaging:** 3 LAYERS POLY

Detector Distance (in): 24"

Detector Filters: NONE

Dose Rate: < Ø.5 mR/hr

Comments: SIDE A 900s 1073
SIDE B 1800s 1074

**********
***** N U C L I D E  M D A  R E P O R T *****
**********

| | Nuclide Name | Energy (keV) | Yield (%) | Line MDA (uCi/kg ) | Nuclide MDA (uCi/kg ) | Activity (uCi/kg ) |
|---|---|---|---|---|---|---|
| | CO-60 | 1173.22 | 100.00 | 1.0733E-003 | 1.07E-003 | -5.5214E-004 |
| | | 1332.49 | 100.00 | 1.0819E-003 | | -4.3963E-004 |
| | CS-134 | 475.35 | 1.46 | 6.5875E-002 | 1.21E-003 | 5.7940E-002 |
| | | 563.23 | 8.38 | 1.2468E-002 | | -1.9077E-003 |
| | | 569.32 | 15.43 | 6.7673E-003 | | -9.8405E-004 |
| | | 604.70 | 97.60 | 1.2982E-003 | | -3.4861E-004 |
| | | 795.84 | 85.40 | 1.2133E-003 | | 9.8621E-004 |
| | | 801.93 | 8.73 | 1.1545E-002 | | 2.8545E-003 |
| | | 1038.57 | 1.00 | 1.0753E-001 | | 2.1014E-002 |
| | | 1167.94 | 1.80 | 6.0170E-002 | | 4.0375E-002 |
| | | 1365.15 | 3.04 | 2.9423E-002 | | 6.2264E-003 |
| + | CS-137 | 661.65* | 85.12 | 5.9231E-004 | 5.92E-004 | 1.2432E-003 |
| + | NP-237 | 300.17 | 6.20 | 1.8164E-002 | 1.70E-003 | 1.8232E-002 |
| | | 312.00* | 36.00 | 1.6972E-003 | | 2.9121E-003 |
| | | 340.60 | 4.20 | 2.5768E-002 | | -1.6884E-002 |
| | | 375.00* | 0.68 | 8.3396E-002 | | 6.1479E-002 |
| | | 415.60 | 1.75 | 6.0378E-002 | | 1.5947E-002 |
| + | Pu-239 | 129.28* | 0.01 | 2.8909E+001 | 2.89E+001 | 2.2953E+001 |
| | | 375.00* | 0.00 | 3.5839E+001 | | 2.6420E+001 |
| | | 413.70 | 0.00 | 6.9467E+001 | | 9.9120E+000 |
| | | 451.50 | 0.00 | 5.1874E+002 | | 1.4481E+002 |
| + | AM-241 | 59.54* | 35.70 | 9.6803E-003 | 9.68E-003 | 3.6943E+000 |
| | | 125.28 | 0.00 | 7.6882E+001 | | 6.2530E+001 |
| | | 335.40 | 0.00 | 2.1942E+002 | | 3.5302E+001 |
| | | 662.42* | 0.00 | 1.4005E+002 | | 2.9394E+002 |
| | | 722.70 | 0.00 | 7.8713E+002 | | 5.5490E+002 |
| + | PU-241 | 114.00* | 0.02 | 8.5280E+000 | 8.53E+000 | 4.6818E+000 |
| | | 332.60 | 0.00 | 3.7562E+001 | | 3.5620E+001 |
| | CM-243 | 209.70 | 3.27 | 3.9374E-002 | 7.22E-003 | -7.1566E-003 |
| | | 228.18 | 10.56 | 1.1467E-002 | | 1.1317E-002 |
| | | 277.60 | 14.00 | 7.2215E-003 | | -8.1384E-003 |

+ = Nuclide identified during the nuclide identification
* = Energy line found in the spectrum
> = MDA value not calculated
@ = Half-life too short to be able to perform the decay correction

N U C L I D E  T O T A L S

| Nuclide | Mass (g) |
|---|---|
| Pu-239 | 2.09E-003 +/- 4.48E-004 |

## 233-S Item Analysis

Spreadsheet Version 3.0b

1/14/02

**Sample Info:**

**Item ID:** 4908

**File Name:** 1074

**Assay Date:** 9-Jan-02

**File Name:**

**Data Input:**

| Isotope | Activity (uCi/kg) | Meas Uncert |
|---|---|---|
| Pu-239 (129) | | |
| Pu-239 (414) | 3.73E+01 | 1.21E+01 |
| Am-241 | 7.82E+00 | 6.65E-01 |
| Np-237 | 4.17E-03 | 6.36E-04 |
| U-238 | | |
| U-235 | | |
| Cs-137 | 1.67E-03 | 2.84E-44 |
| Co-60 | | |

| Activity (uCi/kg) | Meas Uncert |
|---|---|
| | |
| | |
| | |
| | |
| | |
| | |
| | |
| | |

**Item Parameters:**

Contamination: Surface only

Item Type: Box

Calcs: Use 1st

**Dimensions:**

Length (in): 31

Weight (lbs): 10

Width (in): 4

Depth for TMU (in): 4

Depth (in): 0.25

% Volume: 100

**Am-241 Calcs:**

| | | | | |
|---|---|---|---|---|
| Measured | 7.82E+00 | +/- | 2.07E+00 | Calc from Pu-239 |
| Calculated | 5.16E+01 | +/- | 4.62E+01 | |

**Nuclide Activities:**

| Isotope | Activity (nCi/g) | | Total Unc 1 sigma |
|---|---|---|---|
| Pu-238 | 1.51E+01 | +/- | 5.15E+00 |
| Pu-239 | 3.73E+01 | +/- | 1.27E+01 |
| Pu-240 | 1.94E+01 | +/- | 6.62E+00 |
| Pu-241 | 7.26E+01 | +/- | 2.48E+01 |
| Pu-242 | 1.96E-02 | +/- | 6.69E-03 |
| Am-241 | 5.16E+01 | +/- | 4.62E+01 |
| Np-237 | 4.17E-03 | +/- | 7.61E-04 |
| U-238 | 0.00E+00 | +/- | 0.00E+00 |
| U-235 | 0.00E+00 | +/- | 0.00E+00 |
| Cs-137 | 1.67E-03 | +/- | 1.67E-04 |
| Co-60 | 0.00E+00 | +/- | 0.00E+00 |

**Results:**

| | | | | | |
|---|---|---|---|---|---|
| **Total TRU Activity(nCi/g):** | | 1.23E+02 | +/- | 4.86E+01 | Calc from Pu-239 Act |
| **Pu (g):** | 3.15E-03 | **Pu (g) + 3 sigma TMU:** | | 6.38E-03 | |
| | | **Pu(g) + 3 sigma:** | | 6.23E-03 | |

**Comments:**

Error due to geometry.

Errors:Density > 1,

**Analyst:** Martin Winterrose

**Date:** 2/11/02

```
#Date & Time: Wed Jan 09 14:22:28 2002
~g=RECTANGULAR_PLANE
~description=4908_PLATE
~comment=STEEL_PLATE
~Ccollimator=50MM-180D
~crpn=4
~Detector=7219
~Convergence in %=1            ~MDRPN=4
~Lunit=IN  ~Tunit=C  ~Dunit=G/CU.C    ~Punit=MM.HG
~at=20        ~ap=760       ~rh=50
~Energies kev=   50.000,  100.000,  128.000,  130.000,  150.000,  200.000,#
                300.000,  500.000,  700.000, 1000.000, 1400.000, 2000.000,#
               4000.000,
~Error in %=     10.000,   10.000,   10.000,   10.000,   10.000,    8.000,#
                  8.000,    6.000,    6.000,    4.000,    4.000,    4.000,#
                  4.000,
~d1.1=0.025     ~d1.2=31        ~d1.3=4         ~1mater=POLYPROP ~1den=0.91
~d2.1=0.024     ~2mater=POLYPROP ~2den=0.91
~d3.1=0.025     ~3mater=DRYDIRT  ~3den=1.6       ~3con=0.5
~d4.1=0.25      ~4mater=304SS    ~4den=7.81
~d5.1=0.025     ~5mater=DRYDIRT  ~5den=1.6       ~5con=0.5
~d6.1=0.024     ~6mater=POLYPROP ~6den=0.91
~sd1=24
```

## C A N B E R R A  I S O C S  A N A L Y S I S

Report Generated On : 1/09/02 3:01:45 PM

Sample Title : 4908 Side B
Spectrum Description :
Sample Identification : 1074
Sample Size : 4.5 kg

Sample Taken On : 1/09/02 2:45:00 PM
Acquisition Started : 1/09/02 2:46:37 PM

Live Time: 1800.0 seconds Real Time: 1806.3 seconds

ISOCS Calabration : 4908 PLATE
Energy Calibration Used Done On : 2/27/01
Efficiency Calibration Used Done On : 1/09/02

## P E A K  A N A L Y S I S  R E P O R T

| Peak No. | Peak centroid | Energy (keV) | Net Peak Area | Net Area Uncert. | Continuum Counts |
|---|---|---|---|---|---|
| 1 | 239.32 | 59.92 | 1.32E+005 | 4037.18 | 2.57E+003 |
| 2 | 340.33 | 85.16 | 7.11E+002 | 52.07 | 2.17E+003 |
| 3 | 396.13 | 99.11 | 3.50E+002 | 48.42 | 2.19E+003 |
| 4 | 414.02 | 103.58 | 1.37E+002 | 45.98 | 2.17E+003 |
| 5 | 518.21 | 129.62 | 1.42E+002 | 50.08 | 1.93E+003 |
| 6 | 956.18 | 239.07 | 9.60E+001 | 17.63 | 2.32E+002 |
| 7 | 1249.20 | 312.30 | 1.07E+002 | 15.41 | 1.42E+002 |
| 8 | 1655.46 | 413.84 | 3.39E+001 | 10.71 | 8.54E+001 |
| 9 | 2045.38 | 511.28 | 1.17E+002 | 13.93 | 6.20E+001 |
| 10 | 2438.75 | 609.59 | 7.87E+001 | 11.35 | 4.55E+001 |
| 11 | 2647.95 | 661.88 | 6.38E+001 | 10.64 | 3.92E+001 |
| 12 | 7067.16 | 1766.32 | 4.88E+001 | 7.99 | 1.01E+000 |

## NUCLIDE IDENTIFICATION REPORT

| Nuclide Name | Id Confidence | Energy (keV) | Yield (%) | Activity (uCi) | Activity Uncertainty |
|---|---|---|---|---|---|
| CS-137 | 0.998 | 661.65* | 85.12 | 1.67193E-003 | 2.83821E-004 |
| NP-237 | 0.631 | 300.17 | 6.20 | | |
| | | 312.00* | 36.00 | 4.17442E-003 | 6.35940E-004 |
| | | 340.60 | 4.20 | | |
| | | 375.00 | 0.68 | | |
| | | 415.60* | 1.75 | 3.22527E-002 | 1.02766E-002 |
| Pu-239 | 0.730 | 129.28* | 0.01 | 2.58080E+001 | 1.00639E+001 |
| | | 375.00 | 0.00 | | |
| | | 413.70* | 0.00 | 3.72722E+001 | 1.21297E+001 |
| | | 451.50 @ | 0.00 | | |
| AM-241 | 0.994 | 59.54* | 35.70 | 7.81981E+000 | 6.65458E-001 |
| | | 125.28 | 0.00 | | |
| | | 335.40 | 0.00 | | |
| | | 662.42* @ | 0.00 | 3.95318E+002 | 6.70993E+001 |
| | | 722.70 | 0.00 | | |

## INTERFERENCE CORRECTED REPORT

| Nuclide Name | Nuclide Id Confidence | Wt mean Activity (uCi/kg ) | Wt mean Activity Uncertainty |
|---|---|---|---|
| CS-137 | 0.998 | 1.638856E-003 | 2.837985E-004 |
| NP-237 | 0.631 | 4.188176E-003 | 6.351781E-004 |
| Pu-239 @ | 0.730 | 2.827975E+001 | 7.259638E+000 |
| AM-241 @ | 0.994 | 7.819809E+000 | 6.654577E-001 |

? = nuclide is part of an undetermined solution
X = nuclide rejected by the interference analysis
@ = nuclide contains energy lines not used in Weighted Mean Activity

Errors quoted at 1.000 sigma

**********
***** N U C L I D E  M D A  R E P O R T *****
**********

| | Nuclide Name | Energy (keV) | Yield (%) | Line MDA (uCi/kg ) | Nuclide MDA (uCi/kg ) | Activity (uCi/kg ) |
|---|---|---|---|---|---|---|
| | CO-60 | 1173.22 | 100.00 | 1.5047E-003 | 1.20E-003 | -4.7572E-004 |
| | | 1332.49 | 100.00 | 1.1998E-003 | | -1.1863E-003 |
| | CS-134 | 475.35 | 1.46 | 8.4059E-002 | 1.52E-003 | 3.0283E-002 |
| | | 563.23 | 8.38 | 1.5776E-002 | | 7.0343E-003 |
| | | 569.32 | 15.43 | 8.5127E-003 | | -5.9756E-003 |
| | | 604.70 | 97.60 | 1.5173E-003 | | -4.8517E-004 |
| | | 795.84 | 85.40 | 1.6654E-003 | | 2.4644E-003 |
| | | 801.93 | 8.73 | 1.5042E-002 | | -1.4946E-002 |
| | | 1038.57 | 1.00 | 1.4257E-001 | | -2.6138E-004 |
| | | 1167.94 | 1.80 | 7.7603E-002 | | -1.0131E-001 |
| | | 1365.15 | 3.04 | 3.9666E-002 | | -1.8554E-002 |
| + | CS-137 | 661.65* | 85.12 | 8.3405E-004 | 8.34E-004 | 1.6719E-003 |
| + | NP-237 | 300.17 | 6.20 | 2.2974E-002 | 2.28E-003 | 7.8243E-004 |
| | | 312.00* | 36.00 | 2.2778E-003 | | 4.1744E-003 |
| | | 340.60 | 4.20 | 3.4264E-002 | | 1.7726E-002 |
| | | 375.00 | 0.68 | 1.9891E-001 | | 3.8742E-002 |
| | | 415.60* | 1.75 | 4.3486E-002 | | 3.2253E-002 |
| + | Pu-239 | 129.28* | 0.01 | 3.7562E+001 | 3.76E+001 | 2.5808E+001 |
| | | 375.00 | 0.00 | 8.5480E+001 | | 1.6649E+001 |
| | | 413.70* | 0.00 | 5.0254E+001 | | 3.7272E+001 |
| | | 451.50 | 0.00 | 6.7621E+002 | | 2.2756E+002 |
| + | AM-241 | 59.54* | 35.70 | 1.4069E-002 | 1.41E-002 | 7.8198E+000 |
| | | 125.28 | 0.00 | 1.0069E+002 | | -7.0939E+001 |
| | | 335.40 | 0.00 | 2.9458E+002 | | 1.1771E+002 |
| | | 662.42* | 0.00 | 1.9721E+002 | | 3.9532E+002 |
| | | 722.70 | 0.00 | 1.0514E+003 | | 2.8362E+002 |
| | PU-241 | 114.00 | 0.02 | 1.9206E+001 | 1.92E+001 | 7.4896E+000 |
| | | 332.60 | 0.00 | 4.8166E+001 | | 8.9940E+000 |
| | CM-243 | 209.70 | 3.27 | 5.2424E-002 | 1.02E-002 | -1.5515E-002 |
| | | 228.18 | 10.56 | 1.4748E-002 | | 9.0284E-004 |
| | | 277.60 | 14.00 | 1.0208E-002 | | 1.4387E-005 |

+ = Nuclide identified during the nuclide identification
* = Energy line found in the spectrum
> = MDA value not calculated
@ = Half-life too short to be able to perform the decay correction

N U C L I D E  T O T A L S

| Nuclide | Mass (g) |
|---|---|
| Pu-239 | 2.07E-003 +/- 5.32E-004 |

# Bldg 233-S
# NDA Item Description Sheet
# Pipe Geometry

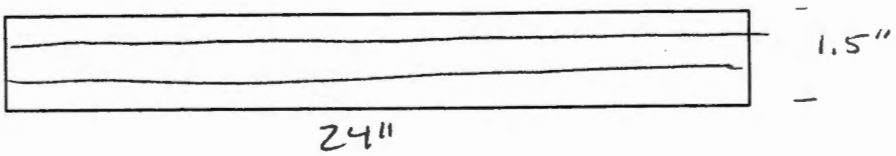


Put Dimensions on Pipe

**Item ID:** 4519

Weight (kg): 6.5 lb 2.95 Kg

**Material Description:** THREE, 1/2" PIPES

**Packaging:** 3 LAYERS POLY

Detector Distance (in): 24"

Detector Filters: NONE

Dose Rate: < 0.5 mR/hr

Comments: SIDE A 1083
SIDE B 1084 1600s

## 233-S Item Analysis

Spreadsheet Version 3.0b

01/14/2002

**Sample Info:**

| | | | |
|---|---|---|---|
| **Item ID:** | 4519 | **Assay Date:** | 10-Jan-02 |
| **File Name:** | 1084 | **File Name:** | |

**Data Input:**

| Isotope | Activity (uCi/kg) | Meas Uncert | Activity (uCi/kg) | Meas Uncert |
|---|---|---|---|---|
| Pu-239 (129) | 1.64E+02 | | | |
| Pu-239 (414) | | | | |
| Am-241 | 7.26E+01 | 6.11E+00 | | |
| Np-237 | | | | |
| U-238 | | | | |
| U-235 | | | | |
| Cs-137 | 2.04E-03 | 8.26E-04 | | |
| Co-60 | | | | |

**Item Parameters:**

Contamination: Internal

Item Type: Pipe or Duct

Calcs: Use 1st

**Dimensions:**

| | | | | | |
|---|---|---|---|---|---|
| Length (in): | 24 | Width (in): | 1.5 | Depth (in): | 1.5 |
| Weight (lbs): | 6.5 | Depth for TMU (in): | 4 | % Volume: | 100 |

**Am-241 Calcs:**

| | | | | |
|---|---|---|---|---|
| Measured | 7.26E+01 | +/- | 3.30E+01 | Use Meas |
| Calculated | 2.27E+02 | +/- | 1.43E+02 | |

**Nuclide Activities:**

| Isotope | Activity (nCi/g) | | Total Unc 1 sigma |
|---|---|---|---|
| Pu-238 | 6.65E+01 | +/- | 1.49E+01 |
| Pu-239 | 1.64E+02 | +/- | 3.68E+01 |
| Pu-240 | 8.55E+01 | +/- | 1.92E+01 |
| Pu-241 | 3.19E+02 | +/- | 7.17E+01 |
| Pu-242 | 8.63E-02 | +/- | 1.94E-02 |
| Am-241 | 7.26E+01 | +/- | 3.30E+01 |
| Np-237 | 0.00E+00 | +/- | 0.00E+00 |
| U-238 | 0.00E+00 | +/- | 0.00E+00 |
| U-235 | 0.00E+00 | +/- | 0.00E+00 |
| Cs-137 | 2.04E-03 | +/- | 8.57E-04 |
| Co-60 | 0.00E+00 | +/- | 0.00E+00 |

**Results:**

| | | | | | |
|---|---|---|---|---|---|
| **Total TRU Activity(nCi/g):** | | 2.42E+02 | +/- | 1.10E+02 | Calc from Am-241 Act |
| **Pu (g):** | 9.02E-03 | **Pu (g) + 3 sigma TMU:** | | 1.51E-02 | |
| | | **Pu(g) + 3 sigma:** | | 9.02E-03 | |

**Comments:**

Measured Am-241 or Pu-239 results in TRU characterization.

Errors:

**Analyst:** Martin Winterrose

**Date:** 02/10/2002

```
#Date & Time: Thu Jan 10 14:06:06 2002
~g=PIPE
~description=4519_PIPE
~comment=3_1/2"_PIPES
~Ccollimator=50MM-100D~
~crpn=4
~Detector=7219
~Convergence in %=1            ~MDRPN=4
~Lunit=IN  ~Tunit=C  ~Dunit=G/CU.C    ~Punit=MM.HG
~at=20        ~ap=760       ~rh=50
~Energies kev=   50.000,  100.000,  128.000,  130.000,  150.000,  200.000,#
                300.000,  500.000,  700.000, 1000.000, 1400.000, 2000.000,#
               4000.000,
~Error in %=     10.000,   10.000,   10.000,   10.000,   10.000,    8.000,#
                  8.000,    6.000,    6.000,    4.000,    4.000,    4.000,#
                  4.000,
~d1.1=0.145     ~d1.2=1.5       ~d1.3=12        ~d1.4=12        ~1mater=304SS    ~1den=7.81
~d2.1=0.109     ~d2.2=12        ~d2.3=12        ~2mater=DRYDIRT  ~2den=1.6       ~2con=1
~sd1=24
```

## C A N B E R R A  I S O C S  A N A L Y S I S

Report Generated On : 1/10/02 2:41:10 PM

Sample Title : 4519 Side B
Spectrum Description :
Sample Identification : 1084
Sample Size : 3.0 kg

Sample Taken On : 1/10/02 2:25:00 PM
Acquisition Started : 1/10/02 2:26:03 PM

Live Time: 1800.0 seconds Real Time: 1802.8 seconds

ISOCS Calabration : 4519 PIPE
Energy Calibration Used Done On : 2/27/01
Efficiency Calibration Used Done On : 1/10/02

## P E A K  A N A L Y S I S  R E P O R T

| Peak No. | Peak centroid | Energy (keV) | Net Peak Area | Net Area Uncert. | Continuum Counts |
|---|---|---|---|---|---|
| 1 | 239.33 | 59.92 | 1.85E+004 | 514.39 | 1.82E+003 |
| 2 | 340.35 | 85.16 | 7.95E+002 | 63.01 | 2.17E+003 |
| 3 | 349.72 | 87.51 | 1.83E+002 | 52.39 | 2.19E+003 |
| 4 | 2045.62 | 511.34 | 1.30E+002 | 14.77 | 6.67E+001 |
| 5 | 2438.38 | 609.50 | 1.33E+002 | 13.70 | 4.84E+001 |
| 6 | 2646.83 | 661.60 | 4.15E+001 | 16.75 | 3.81E+001 |
| 7 | 3647.38 | 911.65 | 7.55E+001 | 10.35 | 2.30E+001 |
| 8 | 7066.77 | 1766.22 | 4.00E+001 | 7.65 | 1.09E+000 |

## N U C L I D E  I D E N T I F I C A T I O N  R E P O R T

| Nuclide Name | Id Confidence | Energy (keV) | Yield (%) | Activity (uCi) | Activity Uncertainty |
|---|---|---|---|---|---|
| CS-137 | 1.000 | 661.65* | 85.12 | 2.04331E-003 | 8.26348E-004 |
| AM-241 | 0.993 | 59.54* | 35.70 | 7.26147E+001 | 6.11426E+000 |
| | | 125.28 | 0.00 | | |
| | | 335.40 | 0.00 | | |
| | | 662.42* @ | 0.00 | 4.83129E+002 | 1.95381E+002 |
| | | 722.70 | 0.00 | | |

## I N T E R F E R E N C E  C O R R E C T E D  R E P O R T

| Nuclide Name | Nuclide Id Confidence | Wt mean Activity (uCi/kg ) | Wt mean Activity Uncertainty |
|---|---|---|---|
| CS-137 | 1.000 | 1.736197E-003 | 8.267342E-004 |
| AM-241 @ | 0.993 | 7.261472E+001 | 6.114259E+000 |

? = nuclide is part of an undetermined solution
X = nuclide rejected by the interference analysis
@ = nuclide contains energy lines not used in Weighted Mean Activity

Errors quoted at 1.000 sigma

**********
***** N U C L I D E  M D A  R E P O R T *****
**********

| | Nuclide Name | Energy (keV) | Yield (%) | Line MDA (uCi/kg ) | Nuclide MDA (uCi/kg ) | Activity (uCi/kg ) |
|---|---|---|---|---|---|---|
| | CO-60 | 1173.22 | 100.00 | 2.7793E-003 | 2.18E-003 | 5.0798E-004 |
| | | 1332.49 | 100.00 | 2.1765E-003 | | -1.0513E-003 |
| | CS-134 | 475.35 | 1.46 | 1.8348E-001 | 2.76E-003 | -4.5461E-003 |
| | | 563.23 | 8.38 | 3.1071E-002 | | 3.1291E-003 |
| | | 569.32 | 15.43 | 1.7753E-002 | | 1.4148E-002 |
| | | 604.70 | 97.60 | 3.3449E-003 | | -1.4854E-003 |
| | | 795.84 | 85.40 | 2.7590E-003 | | 9.0732E-004 |
| | | 801.93 | 8.73 | 2.6851E-002 | | -1.2045E-002 |
| | | 1038.57 | 1.00 | 2.4512E-001 | | 9.9095E-002 |
| | | 1167.94 | 1.80 | 1.5201E-001 | | 2.5181E-002 |
| | | 1365.15 | 3.04 | 6.6340E-002 | | -6.5179E-002 |
| + | CS-137 | 661.65* | 85.12 | 1.5455E-003 | 1.55E-003 | 2.0433E-003 |
| | NP-237 | 300.17 | 6.20 | 4.9264E-002 | 7.94E-003 | 2.3768E-002 |
| | | 312.00 | 36.00 | 7.9380E-003 | | 3.9218E-003 |
| | | 340.60 | 4.20 | 6.4501E-002 | | -5.0681E-003 |
| | | 375.00 | 0.68 | 3.9112E-001 | | 2.0578E-001 |
| | | 415.60 | 1.75 | 1.5669E-001 | | 5.9356E-002 |
| | Pu-239 | 129.28 | 0.01 | 1.6412E+002 | 1.64E+002 | 1.4883E+001 |
| | | 375.00 | 0.00 | 1.6808E+002 | | 8.8433E+001 |
| | | 413.70 | 0.00 | 1.8606E+002 | | 1.4251E+002 |
| | | 451.50 | 0.00 | 1.4515E+003 | | -1.9624E+002 |
| + | AM-241 | 59.54* | 35.70 | 7.9111E-001 | 7.91E-001 | 7.2615E+001 |
| | | 125.28 | 0.00 | 2.7321E+002 | | -4.9903E+001 |
| | | 335.40 | 0.00 | 5.7534E+002 | | 3.7825E+002 |
| | | 662.42* | 0.00 | 3.6542E+002 | | 4.8313E+002 |
| | | 722.70 | 0.00 | 2.0190E+003 | | 5.2912E+002 |
| | PU-241 | 114.00 | 0.02 | 6.0555E+001 | 6.06E+001 | 3.2994E+001 |
| | | 332.60 | 0.00 | 9.7060E+001 | | 2.6573E+001 |
| | CM-243 | 209.70 | 3.27 | 1.0110E-001 | 2.10E-002 | -3.9429E-002 |
| | | 228.18 | 10.56 | 2.9473E-002 | | -1.7301E-002 |
| | | 277.60 | 14.00 | 2.0997E-002 | | 2.9673E-004 |

+ = Nuclide identified during the nuclide identification
* = Energy line found in the spectrum
> = MDA value not calculated
@ = Half-life too short to be able to perform the decay correction

N U C L I D E  T O T A L S

| Nuclide | Mass (g) |
|---|---|

# Bldg 233s
# NDA Item Description Sheet
## ~~Box~~ Geometry
RECTANGULAR

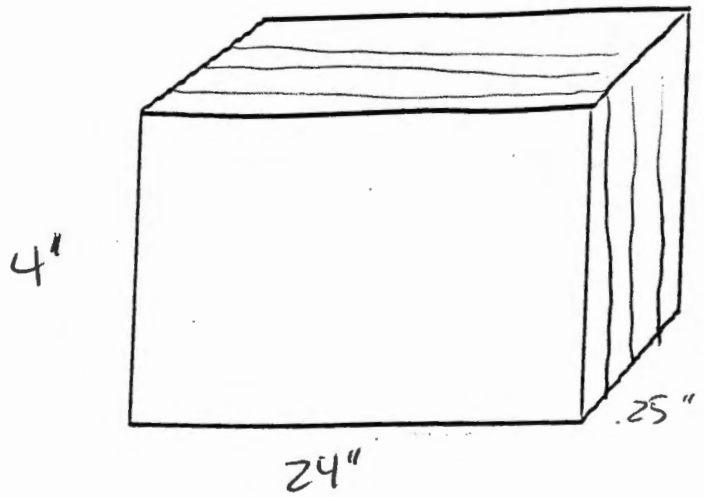


Put Dimensions on Box

Item ID: 4766

Weight (kg): 15.5 lb 7.05 kg

Material Description: THREE, 1/4" STEEL PLATES

Packaging: 3 LAYERS

Detector Distance (in): 24

Detector Filters: NONE

Dose Rate: <0.5 mr/hr

Comments: SIDE A 900s 1085
SIDE B 1800s 1086

## 233-S Item Analysis

Spreadsheet Version 3.0b

01/14/2002

**Sample Info:**

**Item ID:** 4766

**File Name:** 1086

**Assay Date:** 10-Jan-02

**File Name:**

**Data Input:**

| Isotope | Activity (uCi/kg) | Meas Uncert |
|---|---|---|
| Pu-239 (129) | 4.81E+01 | 1.19E+01 |
| Pu-239 (414) | | |
| Am-241 | 1.07E+01 | 1.08E+00 |
| Np-237 | 3.91E-03 | 5.99E-04 |
| U-238 | | |
| U-235 | | |
| Cs-137 | 1.24E-03 | 2.31E-04 |
| Co-60 | | |

| Activity (uCi/kg) | Meas Uncert |
|---|---|
| | |
| | |
| | |
| | |
| | |
| | |
| | |
| | |

**Item Parameters:**

Contamination: Internal and External

Item Type: Box

Calcs: Use 1st

**Dimensions:**

Length (in): 24

Weight (lbs): 15.5

Width (in): 4

Depth for TMU (in): 4

Depth (in): 0.75

% Volume: 100

**Am-241 Calcs:**

| | | | | |
|---|---|---|---|---|
| Measured | 1.07E+01 | +/- | 1.07E+01 | Calc from Pu-239 |
| Calculated | 6.66E+01 | +/- | 8.01E+01 | |

**Nuclide Activities:**

| Isotope | Activity (nCi/g) | | Total Unc 1 sigma |
|---|---|---|---|
| Pu-238 | 1.95E+01 | +/- | 9.19E+00 |
| Pu-239 | 4.81E+01 | +/- | 2.27E+01 |
| Pu-240 | 2.51E+01 | +/- | 1.18E+01 |
| Pu-241 | 9.37E+01 | +/- | 4.41E+01 |
| Pu-242 | 2.53E-02 | +/- | 1.19E-02 |
| Am-241 | 6.66E+01 | +/- | 8.01E+01 |
| Np-237 | 3.91E-03 | +/- | 9.85E-04 |
| U-238 | 0.00E+00 | +/- | 0.00E+00 |
| U-235 | 0.00E+00 | +/- | 0.00E+00 |
| Cs-137 | 1.24E-03 | +/- | 3.39E-04 |
| Co-60 | 0.00E+00 | +/- | 0.00E+00 |

**Results:**

| | | | | | |
|---|---|---|---|---|---|
| **Total TRU Activity (nCi/g):** | 1.59E+02 | +/- | 8.46E+01 | Calc from Pu-239 Act | |
| **Pu (g):** | 6.31E-03 | **Pu (g) + 3 sigma TMU:** | 1.52E-02 | | |
| | | **Pu(g) + 3 sigma:** | 1.10E-02 | | |

**Comments:**

Density error due to geometry selection.

Errors:Density > 1,

**Analyst:** Martin Winterrose

**Date:** 02/11/2002

```
#Date & Time: Thu Jan 10 15:04:43 2002
~g=RECTANGULAR_PLANE
~description=4766_4_PLATES
~comment=STEEL_PLATE
~Ccollimator=50MM-180D
~crpn=4
~Detector=7219
~Convergence in %=1            ~MDRPN=4
~Lunit=IN  ~Tunit=C  ~Dunit=G/CU.C    ~Punit=MM.HG
~at=20        ~ap=760       ~rh=50
~Energies kev=   60.000,   80.000,  100.000,  130.000,  200.000,  400.000,#
                500.000,  700.000, 1000.000,
~Error in %=     10.000,   10.000,   10.000,   10.000,    8.000,    8.000,#
                  6.000,    6.000,    4.000,
~d1.1=0.025     ~d1.2=24        ~d1.3=4         ~1mater=POLYPROP ~1den=0.91
~d2.1=0.025     ~2mater=DRYDIRT  ~2den=1.6       ~2con=0.25
~d3.1=0.25      ~3mater=304SS    ~3den=7.81
~d4.1=0.025     ~4mater=DRYDIRT  ~4den=1.6       ~4con=0.25
~d5.1=0.25      ~5mater=304SS    ~5den=7.81
~d6.1=0.025     ~6mater=DRYDIRT  ~6den=1.6       ~6con=0.25
~d7.1=0.25      ~7mater=304SS    ~7den=7.81
~d8.1=0.025     ~8mater=DRYDIRT  ~8den=1.6       ~8con=0.25
~sd1=24
```

## C A N B E R R A  I S O C S  A N A L Y S I S

Report Generated On : 1/10/02 3:40:52 PM

Sample Title : 4766 Side B
Spectrum Description :
Sample Identification : 1086
Sample Size : 7.1 kg

Sample Taken On : 1/10/02 3:25:00 PM
Acquisition Started : 1/10/02 3:25:43 PM

Live Time: 1800.0 seconds Real Time: 1806.9 seconds

ISOCS Calabration : 4766 4 PLATES
Energy Calibration Used Done On : 2/27/01
Efficiency Calibration Used Done On : 1/10/02

## P E A K  A N A L Y S I S  R E P O R T

| Peak No. | Peak centroid | Energy (keV) | Net Peak Area | Net Area Uncert. | Continuum Counts |
|---|---|---|---|---|---|
| 1 | 239.31 | 59.91 | 1.50E+005 | 4468.87 | 2.90E+003 |
| 2 | 340.07 | 85.10 | 6.76E+002 | 58.65 | 2.33E+003 |
| 3 | 350.54 | 87.71 | 2.05E+002 | 56.96 | 2.34E+003 |
| 4 | 396.41 | 99.17 | 4.45E+002 | 51.19 | 2.34E+003 |
| 5 | 414.14 | 103.61 | 2.36E+002 | 48.02 | 2.31E+003 |
| 6 | 457.81 | 114.52 | 1.45E+002 | 51.66 | 2.35E+003 |
| 7 | 518.60 | 129.71 | 2.39E+002 | 42.88 | 2.05E+003 |
| 8 | 1248.02 | 312.01 | 1.11E+002 | 15.67 | 1.43E+002 |
| 9 | 1408.68 | 352.16 | 1.16E+002 | 14.90 | 1.28E+002 |
| 10 | 1501.73 | 375.42 | 3.67E+001 | 11.22 | 1.07E+002 |
| 11 | 2045.18 | 511.23 | 1.11E+002 | 14.67 | 6.26E+001 |
| 12 | 2438.76 | 609.60 | 8.87E+001 | 12.19 | 5.32E+001 |
| 13 | 2648.08 | 661.91 | 5.50E+001 | 9.93 | 3.67E+001 |
| 14 | 3647.74 | 911.74 | 5.88E+001 | 9.76 | 3.02E+001 |
| 15 | 7066.76 | 1766.22 | 4.29E+001 | 7.66 | 2.25E+000 |

## NUCLIDE IDENTIFICATION REPORT

| Nuclide Name | Id Confidence | Energy (keV) | Yield (%) | Activity (uCi) | Activity Uncertainty |
|---|---|---|---|---|---|
| CS-137 | 0.997 | 661.65* | 85.12 | 1.24216E-003 | 2.31322E-004 |
| NP-237 | 0.605 | 300.17 | 6.20 | | |
| | | 312.00* | 36.00 | 3.90827E-003 | 5.99408E-004 |
| | | 340.60 | 4.20 | | |
| | | 375.00* | 0.68 | 7.46258E-002 | 2.31466E-002 |
| | | 415.60 | 1.75 | | |
| Pu-239 | 0.723 | 129.28* | 0.01 | 4.81318E+001 | 1.19308E+001 |
| | | 375.00* | 0.00 | 3.20702E+001 | 1.01521E+001 |
| | | 413.70 | 0.00 | | |
| | | 451.50 @ | 0.00 | | |
| AM-241 | 0.994 | 59.54* | 35.70 | 1.06648E+001 | 1.07640E+000 |
| | | 125.28 | 0.00 | | |
| | | 335.40 | 0.00 | | |
| | | 662.42* @ | 0.00 | 2.93702E+002 | 5.46891E+001 |
| | | 722.70 | 0.00 | | |
| PU-241 | 0.810 | 114.00* | 0.02 | 8.39393E+000 | 3.02367E+000 |
| | | 332.60 | 0.00 | | |

## INTERFERENCE CORRECTED REPORT

| Nuclide Name | Nuclide Id Confidence | Wt mean Activity (uCi/kg ) | Wt mean Activity Uncertainty |
|---|---|---|---|
| CS-137 | 0.997 | 1.197057E-003 | 2.313428E-004 |
| NP-237 | 0.605 | 3.893142E-003 | 5.992980E-004 |
| Pu-239 @ | 0.723 | 4.009069E+001 | 6.698980E+000 |
| AM-241 @ | 0.994 | 1.066484E+001 | 1.076404E+000 |
| PU-241 | 0.810 | 8.393926E+000 | 3.023669E+000 |

? = nuclide is part of an undetermined solution
X = nuclide rejected by the interference analysis
@ = nuclide contains energy lines not used in Weighted Mean Activity

Errors quoted at 1.000 sigma

```
*************************************************************************
*****              N U C L I D E   M D A   R E P O R T              *****
*************************************************************************
```

| | Nuclide Name | Energy (keV) | Yield (%) | Line MDA (uCi/kg ) | Nuclide MDA (uCi/kg ) | Activity (uCi/kg ) |
|---|---|---|---|---|---|---|
| | CO-60 | 1173.22 | 100.00 | 1.2064E-003 | 9.58E-004 | 8.3422E-005 |
| | | 1332.49 | 100.00 | 9.5808E-004 | | 1.0828E-004 |
| | CS-134 | 475.35 | 1.46 | 7.7065E-002 | 1.39E-003 | 4.7043E-003 |
| | | 563.23 | 8.38 | 1.2961E-002 | | -6.3647E-003 |
| | | 569.32 | 15.43 | 7.4290E-003 | | -2.4175E-004 |
| | | 604.70 | 97.60 | 1.4715E-003 | | 4.9996E-004 |
| | | 795.84 | 85.40 | 1.3894E-003 | | 1.0457E-003 |
| | | 801.93 | 8.73 | 1.3589E-002 | | -3.7492E-003 |
| | | 1038.57 | 1.00 | 1.0305E-001 | | 2.8316E-002 |
| | | 1167.94 | 1.80 | 6.2530E-002 | | 6.1413E-002 |
| | | 1365.15 | 3.04 | 3.0703E-002 | | 2.0934E-002 |
| + | CS-137 | 661.65* | 85.12 | 6.9715E-004 | 6.97E-004 | 1.2422E-003 |
| + | NP-237 | 300.17 | 6.20 | 2.1223E-002 | 2.05E-003 | 5.4832E-003 |
| | | 312.00* | 36.00 | 2.0533E-003 | | 3.9083E-003 |
| | | 340.60 | 4.20 | 3.1489E-002 | | 2.1526E-002 |
| | | 375.00* | 0.68 | 1.0359E-001 | | 7.4626E-002 |
| | | 415.60 | 1.75 | 6.7438E-002 | | 8.3710E-003 |
| + | Pu-239 | 129.28* | 0.01 | 4.3025E+001 | 4.30E+001 | 4.8132E+001 |
| | | 375.00* | 0.00 | 4.4516E+001 | | 3.2070E+001 |
| | | 413.70 | 0.00 | 7.7060E+001 | | -9.3016E+001 |
| | | 451.50 | 0.00 | 5.8258E+002 | | -7.9534E+001 |
| + | AM-241 | 59.54* | 35.70 | 1.7973E-002 | 1.80E-002 | 1.0665E+001 |
| | | 125.28 | 0.00 | 1.1599E+002 | | 3.8875E+001 |
| | | 335.40 | 0.00 | 2.6586E+002 | | 1.4356E+002 |
| | | 662.42* | 0.00 | 1.6484E+002 | | 2.9370E+002 |
| | | 722.70 | 0.00 | 9.4270E+002 | | 7.2009E+002 |
| + | PU-241 | 114.00* | 0.02 | 1.3173E+001 | 1.32E+001 | 8.3939E+000 |
| | | 332.60 | 0.00 | 4.4323E+001 | | -3.7776E+000 |
| | CM-243 | 209.70 | 3.27 | 5.3107E-002 | 9.44E-003 | 5.7044E-003 |
| | | 228.18 | 10.56 | 1.4459E-002 | | -2.1389E-003 |
| | | 277.60 | 14.00 | 9.4430E-003 | | -2.4972E-003 |

+ = Nuclide identified during the nuclide identification
* = Energy line found in the spectrum
> = MDA value not calculated
@ = Half-life too short to be able to perform the decay correction

## N U C L I D E  T O T A L S

| Nuclide | | Mass (g) |
|---|---|---|
| Pu-239 | 4.56E-003 +/- | 7.62E-004 |

# Bldg 233-S
# NDA Item Description Sheet
# Pipe Geometry

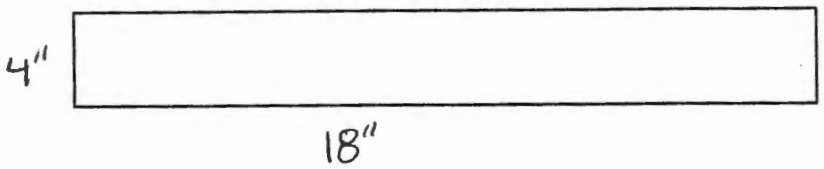


Put Dimensions on Pipe

**Item ID:** 4785

Weight (kg): 5 lb 2.3 Kg

**Material Description:** Two ϕ5" pipes; one 1/4" FLAT BAR

**Packaging:** 3 LAYERS

Detector Distance (in): 24"

Detector Filters: none

Dose Rate: <ϕ.5 mR/hr

Comments: SIDE A 1081 900s
SIDE B 1082 1800s

**233-S Item Analysis** Spreadsheet Version 3.0b 1/14/02

**Sample Info:**

**Item ID:** 4785
**File Name:** 1082
**Assay Date:** 10-Jan-02
**File Name:**

**Data Input:**

| Isotope | Activity (uCi/kg) | Meas Uncert |
|---|---|---|
| Pu-239 (129) | 5.46E+01 | 2.15E+01 |
| Pu-239 (414) | | |
| Am-241 | 1.35E+02 | 1.14E+01 |
| Np-237 | 7.99E-03 | 1.37E-03 |
| U-238 | | |
| U-235 | | |
| Cs-137 | 3.11E-03 | 8.90E-04 |
| Co-60 | | |

| Activity (uCi/kg) | Meas Uncert |
|---|---|
| | |
| | |
| | |
| | |
| | |
| | |
| | |
| | |

**Item Parameters:**

Contamination: Internal
Item Type: Pipe or Duct
Calcs: Use 1st

**Dimensions:**

Length (in): 18
Weight (lbs): 5
Width (in): 4
Depth for TMU (in): 4
Depth (in): 4
% Volume: 100

**Am-241 Calcs:**

| | | | | |
|---|---|---|---|---|
| Measured | 1.35E+02 | +/- | 6.14E+01 | Calc from Pu-239 |
| Calculated | 7.56E+01 | +/- | 8.76E+01 | |

**Nuclide Activities:**

| Isotope | Activity (nCi/g) | | Total Unc 1 sigma |
|---|---|---|---|
| Pu-238 | 2.21E+01 | +/- | 1.00E+01 |
| Pu-239 | 5.46E+01 | +/- | 2.47E+01 |
| Pu-240 | 2.84E+01 | +/- | 1.29E+01 |
| Pu-241 | 1.06E+02 | +/- | 4.81E+01 |
| Pu-242 | 2.87E-02 | +/- | 1.30E-02 |
| Am-241 | 7.56E+01 | +/- | 8.76E+01 |
| Np-237 | 7.99E-03 | +/- | 1.64E-03 |
| U-238 | 0.00E+00 | +/- | 0.00E+00 |
| U-235 | 0.00E+00 | +/- | 0.00E+00 |
| Cs-137 | 3.11E-03 | +/- | 9.55E-04 |
| Co-60 | 0.00E+00 | +/- | 0.00E+00 |

**Results:**

| | | | | |
|---|---|---|---|---|
| **Total TRU Activity(nCi/g):** | 1.81E+02 | +/- | 9.24E+01 | Calc from Pu-239 Act |
| **Pu (g):** 2.31E-03 | **Pu (g) + 3 sigma TMU:** | | 5.45E-03 | |
| | **Pu(g) + 3 sigma:** | | 5.03E-03 | |

**Comments:**

**Errors:**

**Analyst:** Martin D Winterrose
**Date:** 2/11/02

```
#Date & Time: Mon Feb 11 11:10:53 2002
~g=PIPE
~description=4785_PIPE
~comment=2_1/2"_PIPE
~Ccollimator=50MM-180D
~crpn=4
~Detector=7219
~Convergence in %=1            ~MDRPN=4
~Lunit=IN  ~Tunit=C  ~Dunit=G/CU.C    ~Punit=MM.HG
~at=20        ~ap=760       ~rh=50
~Energies kev=   50.000,  100.000,  128.000,  130.000,  150.000,  200.000,#
                300.000,  500.000,  700.000, 1000.000, 1400.000, 2000.000,#
               4000.000,
~Error in %=     10.000,   10.000,   10.000,   10.000,   10.000,    8.000,#
                  8.000,    6.000,    6.000,    4.000,    4.000,    4.000,#
                  4.000,
~d1.1=0.109     ~d1.2=1         ~d1.3=10        ~d1.4=10        ~1mater=304SS    ~1den=7.81
~d2.1=0.109     ~d2.2=10        ~d2.3=10        ~2mater=DRYDIRT  ~2den=1.6       ~2con=1
~d3.1=0.5       ~d3.2=10        ~d3.3=10        ~3mater=DRYAIR   ~3den=0.00129
~sd1=24
```

## C A N B E R R A  I S O C S  A N A L Y S I S

Report Generated On : 2/11/02 11:12:24 AM

Sample Title : 4785 Side B
Spectrum Description :
Sample Identification : 1082
Sample Size : 2.3 kg

Sample Taken On : 1/10/02 1:25:00 PM
Acquisition Started : 1/10/02 1:26:35 PM

Live Time: 1800.0 seconds Real Time: 1804.8 seconds

ISOCS Calabration : 4785 PIPE
Energy Calibration Used Done On : 2/27/01
Efficiency Calibration Used Done On : 2/11/02

## P E A K  A N A L Y S I S  R E P O R T

| Peak No. | Peak centroid | Energy (keV) | Net Peak Area | Net Area Uncert. | Continuum Counts |
|---|---|---|---|---|---|
| 1 | 197.84 | 49.55 | 2.32E+002 | 99.33 | 3.40E+003 |
| 2 | 239.33 | 59.92 | 8.08E+004 | 2388.64 | 2.44E+003 |
| 3 | 339.95 | 85.07 | 7.12E+002 | 62.25 | 2.33E+003 |
| 4 | 350.19 | 87.62 | 2.75E+002 | 53.10 | 2.35E+003 |
| 5 | 395.88 | 99.04 | 2.16E+002 | 49.52 | 2.35E+003 |
| 6 | 518.29 | 129.63 | 1.19E+002 | 42.37 | 2.05E+003 |
| 7 | 1248.60 | 312.15 | 9.17E+001 | 15.10 | 1.49E+002 |
| 8 | 1409.57 | 352.38 | 9.37E+001 | 14.23 | 1.22E+002 |
| 9 | 2045.60 | 511.34 | 1.34E+002 | 15.64 | 5.85E+001 |
| 10 | 2439.22 | 609.71 | 9.22E+001 | 12.47 | 5.55E+001 |
| 11 | 2647.52 | 661.77 | 5.57E+001 | 15.82 | 4.82E+001 |
| 12 | 3647.20 | 911.61 | 7.28E+001 | 10.54 | 2.78E+001 |
| 13 | 3879.52 | 969.67 | 3.76E+001 | 9.04 | 1.94E+001 |
| 14 | 7065.36 | 1765.87 | 3.38E+001 | 7.08 | 1.49E+000 |

## NUCLIDE IDENTIFICATION REPORT

| Nuclide Name | Id Confidence | Energy (keV) | Yield (%) | Activity (uCi) | Activity Uncertainty |
|---|---|---|---|---|---|
| CS-137 | 0.999 | 661.65* | 85.12 | 3.11328E-003 | 8.89537E-004 |
| NP-237 | 0.584 | 300.17 | 6.20 | | |
| | | 312.00* | 36.00 | 7.99251E-003 | 1.37145E-003 |
| | | 340.60 | 4.20 | | |
| | | 375.00 | 0.68 | | |
| | | 415.60 | 1.75 | | |
| Pu-239 | 0.486 | 129.28* | 0.01 | 5.45912E+001 | 2.14543E+001 |
| | | 375.00 | 0.00 | | |
| | | 413.70 | 0.00 | | |
| | | 451.50 @ | 0.00 | | |
| AM-241 | 0.993 | 59.54* | 35.70 | 1.34871E+002 | 1.14344E+001 |
| | | 125.28 | 0.00 | | |
| | | 335.40 | 0.00 | | |
| | | 662.42* @ | 0.00 | 7.36118E+002 | 2.10317E+002 |
| | | 722.70 | 0.00 | | |

## INTERFERENCE CORRECTED REPORT

| Nuclide Name | Nuclide Id Confidence | Wt mean Activity (uCi/kg ) | Wt mean Activity Uncertainty |
|---|---|---|---|
| CS-137 | 0.999 | 2.542867E-003 | 8.908109E-004 |
| NP-237 | 0.584 | 7.992513E-003 | 1.371454E-003 |
| Pu-239 @ | 0.486 | 5.459116E+001 | 2.145435E+001 |
| AM-241 @ | 0.993 | 1.348715E+002 | 1.143438E+001 |

? = nuclide is part of an undetermined solution
X = nuclide rejected by the interference analysis
@ = nuclide contains energy lines not used in Weighted Mean Activity

Errors quoted at 1.000 sigma

**********
***** N U C L I D E  M D A  R E P O R T *****
**********

| | Nuclide Name | Energy (keV) | Yield (%) | Line MDA (uCi/kg ) | Nuclide MDA (uCi/kg ) | Activity (uCi/kg ) |
|---|---|---|---|---|---|---|
| | CO-60 | 1173.22 | 100.00 | 2.9668E-003 | 2.48E-003 | -5.8300E-004 |
| | | 1332.49 | 100.00 | 2.4784E-003 | | -2.0063E-003 |
| | CS-134 | 475.35 | 1.46 | 2.0290E-001 | 3.28E-003 | 3.6834E-002 |
| | | 563.23 | 8.38 | 3.4679E-002 | | -1.4034E-003 |
| | | 569.32 | 15.43 | 1.9468E-002 | | -7.4491E-003 |
| | | 604.70 | 97.60 | 3.6849E-003 | | -1.5448E-003 |
| | | 795.84 | 85.40 | 3.2751E-003 | | 2.6990E-003 |
| | | 801.93 | 8.73 | 3.2912E-002 | | 1.4906E-002 |
| | | 1038.57 | 1.00 | 2.8334E-001 | | -1.9180E-001 |
| | | 1167.94 | 1.80 | 1.7682E-001 | | 1.4582E-001 |
| | | 1365.15 | 3.04 | 7.9820E-002 | | -1.5741E-002 |
| + | CS-137 | 661.65* | 85.12 | 1.9552E-003 | 1.96E-003 | 3.1133E-003 |
| + | NP-237 | 300.17 | 6.20 | 5.3561E-002 | 5.18E-003 | -2.8283E-003 |
| | | 312.00* | 36.00 | 5.1843E-003 | | 7.9925E-003 |
| | | 340.60 | 4.20 | 7.5263E-002 | | 3.2136E-002 |
| | | 375.00 | 0.68 | 4.4647E-001 | | 1.3814E-001 |
| | | 415.60 | 1.75 | 1.7552E-001 | | 1.9449E-003 |
| + | Pu-239 | 129.28* | 0.01 | 9.7688E+001 | 9.77E+001 | 5.4591E+001 |
| | | 375.00 | 0.00 | 1.9187E+002 | | 5.9366E+001 |
| | | 413.70 | 0.00 | 2.0095E+002 | | 3.2782E+001 |
| | | 451.50 | 0.00 | 1.5913E+003 | | 7.4639E+002 |
| + | AM-241 | 59.54* | 35.70 | 3.8864E-001 | 3.89E-001 | 1.3487E+002 |
| | | 125.28 | 0.00 | 2.6980E+002 | | 2.4609E+002 |
| | | 335.40 | 0.00 | 6.4416E+002 | | 2.6043E+002 |
| | | 662.42* | 0.00 | 4.6229E+002 | | 7.3612E+002 |
| | | 722.70 | 0.00 | 2.1425E+003 | | -2.8337E+002 |
| | PU-241 | 114.00 | 0.02 | 5.6459E+001 | 5.65E+001 | 1.7116E+000 |
| | | 332.60 | 0.00 | 1.0958E+002 | | -2.2231E+000 |
| | CM-243 | 209.70 | 3.27 | 1.1774E-001 | 2.36E-002 | -4.9360E-002 |
| | | 228.18 | 10.56 | 3.2725E-002 | | 1.6390E-003 |
| | | 277.60 | 14.00 | 2.3562E-002 | | -4.1612E-003 |

+ = Nuclide identified during the nuclide identification
* = Energy line found in the spectrum
> = MDA value not calculated
@ = Half-life too short to be able to perform the decay correction

N U C L I D E  T O T A L S

| Nuclide | Mass (g) |
|---|---|
| Pu-239 | 2.00E-003 +/- 7.86E-004 |

# Bldg 233-S
# NDA Item Description Sheet
## ~~Pipe~~ Geometry
PLATE

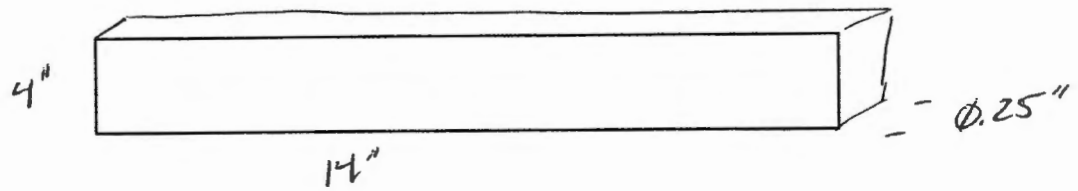


Put Dimensions on Pipe

**Item ID:** 4874

Weight (kg): 7 lb 3.18Kg

**Material Description:** 1/4" STEEL PLATE

**Packaging:** 3 LAYERS

Detector Distance (in): 24"

Detector Filters: NONE

Dose Rate: <Ø.5 mR/hr

Comments: SIDE A 900s 1079
SIDE B 1800s 1080

## 233-S Item Analysis

Spreadsheet Version 3.0b

1/14/02

**Sample Info:**

**Item ID:** 4874

**File Name:** 1080

**Assay Date:** 10-Jan-02

**File Name:**

**Data Input:**

| Isotope | Activity (uCi/kg) | Meas Uncert | Activity (uCi/kg) | Meas Uncert |
|---|---|---|---|---|
| Pu-239 (129) | 3.83E+01 | 1.33E+01 | | |
| Pu-239 (414) | | | | |
| Am-241 | 7.83E+00 | 6.55E-01 | | |
| Np-237 | 5.04E-03 | 8.03E-04 | | |
| U-238 | | | | |
| U-235 | 1.79E-03 | 5.84E-04 | | |
| Cs-137 | 1.93E-03 | 3.50E-04 | | |
| Co-60 | | | | |

**Item Parameters:**

Contamination: Surface only

Item Type: Box

Calcs: Use 1st

**Dimensions:**

Length (in): 14

Width (in): 4

Depth (in): 0.25

Weight (lbs): 7

Depth for TMU (in): 4

% Volume: 100

**Am-241 Calcs:**

| | | | | |
|---|---|---|---|---|
| Measured | 7.83E+00 | +/- | 2.06E+00 | Use Meas |
| Calculated | 5.30E+01 | +/- | 5.22E+01 | |

**Nuclide Activities:**

| Isotope | Activity (nCi/g) | | Total Unc 1 sigma |
|---|---|---|---|
| Pu-238 | 1.55E+01 | +/- | 5.89E+00 |
| Pu-239 | 3.83E+01 | +/- | 1.45E+01 |
| Pu-240 | 1.99E+01 | +/- | 7.57E+00 |
| Pu-241 | 7.45E+01 | +/- | 2.83E+01 |
| Pu-242 | 2.01E-02 | +/- | 7.64E-03 |
| Am-241 | 7.83E+00 | +/- | 2.06E+00 |
| Np-237 | 5.04E-03 | +/- | 9.48E-04 |
| U-238 | 0.00E+00 | +/- | 0.00E+00 |
| U-235 | 1.79E-03 | +/- | 6.11E-04 |
| Cs-137 | 1.93E-03 | +/- | 4.00E-04 |
| Co-60 | 0.00E+00 | +/- | 0.00E+00 |

**Results:**

| | | | | |
|---|---|---|---|---|
| **Total TRU Activity(nCi/g):** | 8.16E+01 | +/- | 1.75E+01 | Calc from Pu-239 Act |
| **Pu (g):** 2.27E-03 | **Pu (g) + 3 sigma TMU:** | | 4.85E-03 | |
| | **Pu(g) + 3 sigma:** | | 4.64E-03 | |

**Comments:**

Error due to high metal content.

Errors:Density > 1,

**Analyst:** Martin D Winterrose

**Date:** 1/24/02

```
#Date & Time: Thu Jan 10 11:06:10 2002
~g=RECTANGULAR_PLANE
~description=4874_PLATE
~comment=STEEL_PLATE
~Ccollimator=50MM-180D
~crpn=4
~Detector=7219
~Convergence in %=1            ~MDRPN=4
~Lunit=IN  ~Tunit=C  ~Dunit=G/CU.C    ~Punit=MM.HG
~at=20        ~ap=760       ~rh=50
~Energies kev=   50.000,  100.000,  128.000,  130.000,  150.000,  200.000,#
                300.000,  500.000,  700.000, 1000.000, 1400.000, 2000.000,#
               4000.000,
~Error in %=     10.000,   10.000,   10.000,   10.000,   10.000,    8.000,#
                  8.000,    6.000,    6.000,    4.000,    4.000,    4.000,#
                  4.000,
~d1.1=0.025     ~d1.2=14        ~d1.3=4         ~1mater=POLYPROP ~1den=0.91
~d2.1=0.024     ~2mater=POLYPROP ~2den=0.91
~d3.1=0.025     ~3mater=DRYDIRT  ~3den=1.6       ~3con=0.5
~d4.1=0.25      ~4mater=304SS    ~4den=7.81
~d5.1=0.025     ~5mater=DRYDIRT  ~5den=1.6       ~5con=0.5
~d6.1=0.024     ~6mater=POLYPROP ~6den=0.91
~sd1=24
```

## C A N B E R R A  I S O C S  A N A L Y S I S

Report Generated On : 1/10/02 11:43:22 AM

Sample Title : 4874 Side B
Spectrum Description :
Sample Identification : 1080
Sample Size : 3.2 kg

Sample Taken On : 1/10/02 11:27:00 AM
Acquisition Started : 1/10/02 11:28:14 AM

Live Time: 1800.0 seconds Real Time: 1805.3 seconds

ISOCS Calabration : 4874 PLATE
Energy Calibration Used Done On : 2/27/01
Efficiency Calibration Used Done On : 1/10/02

## P E A K  A N A L Y S I S  R E P O R T

| Peak No. | Peak centroid | Energy (keV) | Net Peak Area | Net Area Uncert. | Continuum Counts |
|---|---|---|---|---|---|
| 1 | 207.83 | 52.05 | 2.74E+002 | 89.52 | 3.49E+003 |
| 2 | 239.33 | 59.92 | 1.05E+005 | 2763.95 | 2.52E+003 |
| 3 | 339.61 | 84.98 | 5.43E+002 | 56.04 | 2.28E+003 |
| 4 | 351.93 | 88.06 | 2.03E+002 | 51.71 | 2.29E+003 |
| 5 | 371.84 | 93.04 | 1.62E+002 | 45.93 | 2.30E+003 |
| 6 | 396.00 | 99.07 | 2.82E+002 | 47.70 | 2.29E+003 |
| 7 | 413.70 | 103.50 | 1.58E+002 | 46.68 | 2.26E+003 |
| 8 | 518.40 | 129.66 | 1.65E+002 | 49.21 | 2.01E+003 |
| 9 | 742.84 | 185.75 | 6.50E+001 | 21.00 | 5.03E+002 |
| 10 | 1248.61 | 312.16 | 9.96E+001 | 15.12 | 1.34E+002 |
| 11 | 2045.46 | 511.30 | 1.35E+002 | 14.55 | 7.36E+001 |
| 12 | 2438.58 | 609.55 | 1.14E+002 | 13.03 | 4.57E+001 |
| 13 | 2648.63 | 662.05 | 5.73E+001 | 10.21 | 4.06E+001 |
| 14 | 3646.83 | 911.52 | 5.31E+001 | 9.34 | 2.63E+001 |
| 15 | 7067.42 | 1766.39 | 6.18E+001 | 8.77 | 3.18E+000 |

## NUCLIDE IDENTIFICATION REPORT

| Nuclide Name | Id Confidence | Energy (keV) | Yield (%) | Activity (uCi) | Activity Uncertainty |
|---|---|---|---|---|---|
| CS-137 | 0.994 | 661.65* | 85.12 | 1.93309E-003 | 3.49793E-004 |
| U-235 | 0.647 | 143.76 | 10.50 | | |
| | | 185.71* | 54.00 | 1.78955E-003 | 5.83932E-004 |
| | | 205.31 | 4.70 | | |
| NP-237 | 0.584 | 300.17 | 6.20 | | |
| | | 312.00* | 36.00 | 5.04167E-003 | 8.02514E-004 |
| | | 340.60 | 4.20 | | |
| | | 375.00 | 0.68 | | |
| | | 415.60 | 1.75 | | |
| Pu-239 | 0.505 | 129.28* | 0.01 | 3.89283E+001 | 1.33214E+001 |
| | | 375.00 | 0.00 | | |
| | | 413.70 | 0.00 | | |
| | | 451.50 @ | 0.00 | | |
| AM-241 | 0.994 | 59.54* | 35.70 | 7.82672E+000 | 6.55126E-001 |
| | | 125.28 | 0.00 | | |
| | | 335.40 | 0.00 | | |
| | | 662.42* @ | 0.00 | 4.57070E+002 | 8.26975E+001 |
| | | 722.70 | 0.00 | | |

## INTERFERENCE CORRECTED REPORT

| Nuclide Name | Nuclide Id Confidence | Wt mean Activity (uCi/kg ) | Wt mean Activity Uncertainty |
|---|---|---|---|
| CS-137 | 0.994 | 1.899993E-003 | 3.497654E-004 |
| U-235 | 0.647 | 1.789549E-003 | 5.839315E-004 |
| NP-237 | 0.584 | 5.041667E-003 | 8.025143E-004 |
| Pu-239 @ | 0.505 | 3.892827E+001 | 1.332143E+001 |
| AM-241 @ | 0.994 | 7.826722E+000 | 6.551263E-001 |

? = nuclide is part of an undetermined solution
X = nuclide rejected by the interference analysis
@ = nuclide contains energy lines not used in Weighted Mean Activity

Errors quoted at 1.000 sigma

**********
***** N U C L I D E  M D A  R E P O R T *****
**********

| | Nuclide Name | Energy (keV) | Yield (%) | Line MDA (uCi/kg ) | Nuclide MDA (uCi/kg ) | Activity (uCi/kg ) |
|---|---|---|---|---|---|---|
| | CO-60 | 1173.22 | 100.00 | 1.8341E-003 | 1.53E-003 | -7.7138E-004 |
| | | 1332.49 | 100.00 | 1.5262E-003 | | 1.0177E-003 |
| | CS-134 | 475.35 | 1.46 | 1.2214E-001 | 1.95E-003 | 9.7349E-002 |
| | | 563.23 | 8.38 | 2.0401E-002 | | -7.1264E-003 |
| | | 569.32 | 15.43 | 1.1068E-002 | | 1.4954E-004 |
| | | 604.70 | 97.60 | 2.2137E-003 | | 5.8508E-004 |
| | | 795.84 | 85.40 | 1.9457E-003 | | -3.5073E-004 |
| | | 801.93 | 8.73 | 1.7933E-002 | | -1.1005E-002 |
| | | 1038.57 | 1.00 | 1.7956E-001 | | 5.5666E-002 |
| | | 1167.94 | 1.80 | 1.1327E-001 | | 4.7729E-002 |
| | | 1365.15 | 3.04 | 4.9938E-002 | | -1.6584E-002 |
| + | CS-137 | 661.65* | 85.12 | 1.0907E-003 | 1.09E-003 | 1.9331E-003 |
| + | NP-237 | 300.17 | 6.20 | 3.0029E-002 | 2.87E-003 | -1.1641E-002 |
| | | 312.00* | 36.00 | 2.8672E-003 | | 5.0417E-003 |
| | | 340.60 | 4.20 | 4.4099E-002 | | 1.1794E-002 |
| | | 375.00 | 0.68 | 2.5892E-001 | | 1.4453E-001 |
| | | 415.60 | 1.75 | 1.0338E-001 | | 6.2006E-003 |
| + | Pu-239 | 129.28* | 0.01 | 4.9815E+001 | 4.98E+001 | 3.8928E+001 |
| | | 375.00 | 0.00 | 1.1127E+002 | | 6.2109E+001 |
| | | 413.70 | 0.00 | 1.2045E+002 | | 2.8701E+001 |
| | | 451.50 | 0.00 | 9.4150E+002 | | -1.5433E+002 |
| + | AM-241 | 59.54* | 35.70 | 1.7621E-002 | 1.76E-002 | 7.8267E+000 |
| | | 125.28 | 0.00 | 1.3184E+002 | | -1.0052E+001 |
| | | 335.40 | 0.00 | 3.7364E+002 | | -1.3550E+002 |
| | | 662.42* | 0.00 | 2.5789E+002 | | 4.5707E+002 |
| | | 722.70 | 0.00 | 1.3439E+003 | | 7.8251E+002 |
| | PU-241 | 114.00 | 0.02 | 2.5287E+001 | 2.53E+001 | -1.5385E+000 |
| | | 332.60 | 0.00 | 6.4252E+001 | | 4.1676E+001 |
| | CM-243 | 209.70 | 3.27 | 6.9211E-002 | 1.37E-002 | 2.5718E-002 |
| | | 228.18 | 10.56 | 1.9592E-002 | | 9.9913E-003 |
| | | 277.60 | 14.00 | 1.3740E-002 | | 8.0341E-003 |

+ = Nuclide identified during the nuclide identification
* = Energy line found in the spectrum
> = MDA value not calculated
@ = Half-life too short to be able to perform the decay correction

N U C L I D E  T O T A L S

| Nuclide | Mass (g) |
|---|---|
| U-235 | 2.58E-003 +/- 8.43E-004 |
| Pu-239 | 2.00E-003 +/- 6.83E-004 |

# Bldg 233-S
# NDA Item Description Sheet
# ~~Pipe~~ Geometry
PLATE

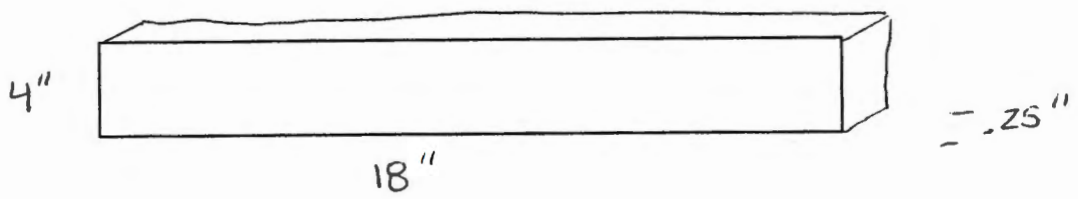


Put Dimensions on ~~Pipe~~ PLATE

**Item ID:** 4B83

Weight (kg): 55 lb 2.5 kg

**Material Description:** 1/4" STEEL PLATE

**Packaging:** 3 LAYERS

Detector Distance (in): 24"

Detector Filters: none

Dose Rate: < 0.5 mR/hr

Comments: SIDE A 900s 1077
SIDE B 1800s 1078

## 233-S Item Analysis

Spreadsheet Version 3.0b

1/14/02

**Sample Info:**

**Item ID:** 4883

**File Name:** 1078

**Assay Date:** 10-Jan-02

**File Name:**

**Data Input:**

| Isotope | Activity (uCi/kg) | Meas Uncert |
|---|---|---|
| Pu-239 (129) | 1.08E+02 | |
| Pu-239 (414) | | |
| Am-241 | 3.49E+00 | 2.91E-01 |
| Np-237 | | |
| U-238 | | |
| U-235 | | |
| Cs-137 | 1.93E-03 | 4.21E-04 |
| Co-60 | | |

| Activity (uCi/kg) | Meas Uncert |
|---|---|
| | |
| | |
| | |
| | |
| | |
| | |
| | |
| | |

**Item Parameters:**

Contamination: Surface only

Item Type: Box

Calcs: Use 1st

**Dimensions:**

Length (in): 18

Width (in): 4

Depth (in): 0.25

Weight (lbs): 5.5

Depth for TMU (in): 4

% Volume: 100

**Am-241 Calcs:**

| | | | | |
|---|---|---|---|---|
| Measured | 3.49E+00 | +/- | 9.20E-01 | Use Meas |
| Calculated | 1.49E+02 | +/- | 7.17E+01 | |

**Nuclide Activities:**

| Isotope | Activity (nCi/g) | | Total Unc 1 sigma |
|---|---|---|---|
| Pu-238 | 4.38E+01 | +/- | 6.62E+00 |
| Pu-239 | 1.08E+02 | +/- | 1.63E+01 |
| Pu-240 | 5.63E+01 | +/- | 8.52E+00 |
| Pu-241 | 2.10E+02 | +/- | 3.18E+01 |
| Pu-242 | 5.68E-02 | +/- | 8.60E-03 |
| Am-241 | 3.49E+00 | +/- | 9.20E-01 |
| Np-237 | 0.00E+00 | +/- | 0.00E+00 |
| U-238 | 0.00E+00 | +/- | 0.00E+00 |
| U-235 | 0.00E+00 | +/- | 0.00E+00 |
| Cs-137 | 1.93E-03 | +/- | 4.63E-04 |
| Co-60 | 0.00E+00 | +/- | 0.00E+00 |

**Results:**

| | | | | |
|---|---|---|---|---|
| **Total TRU Activity(nCi/g):** | 1.16E+01 | +/- | 3.07E+00 | Calc from Am-241 Act |
| **Pu (g):** | 5.03E-03 | **Pu (g) + 3 sigma TMU:** | 7.31E-03 | |
| | | **Pu(g) + 3 sigma:** | 5.03E-03 | |

**Comments:**

Error due to geometry.

Errors:Density > 1,

**Analyst:** Martin Winterrose

**Date:** 2/11/02

```
#Date & Time: Thu Jan 10 10:02:39 2002
~g=RECTANGULAR_PLANE
~description=4883_PLATE
~comment=STEEL_PLATE
~Ccollimator=50MM-180D
~crpn=4
~Detector=7219
~Convergence in %=1            ~MDRPN=4
~Lunit=IN  ~Tunit=C  ~Dunit=G/CU.C    ~Punit=MM.HG
~at=20        ~ap=760       ~rh=50
~Energies kev=   50.000,  100.000,  128.000,  130.000,  150.000,  200.000,#
                300.000,  500.000,  700.000, 1000.000, 1400.000, 2000.000,#
               4000.000,
~Error in %=     10.000,   10.000,   10.000,   10.000,   10.000,    8.000,#
                  8.000,    6.000,    6.000,    4.000,    4.000,    4.000,#
                  4.000,
~d1.1=0.025     ~d1.2=18        ~d1.3=4         ~1mater=POLYPROP ~1den=0.91
~d2.1=0.024     ~2mater=POLYPROP ~2den=0.91
~d3.1=0.025     ~3mater=DRYDIRT  ~3den=1.6       ~3con=0.5
~d4.1=0.25      ~4mater=304SS    ~4den=7.81
~d5.1=0.025     ~5mater=DRYDIRT  ~5den=1.6       ~5con=0.5
~d6.1=0.024     ~6mater=POLYPROP ~6den=0.91
~sd1=24
```

## C A N B E R R A  I S O C S  A N A L Y S I S

Report Generated On : 1/10/02 10:42:07 AM

Sample Title : 4883 Side B
Spectrum Description :
Sample Identification : 1078
Sample Size : 2.5 kg

Sample Taken On : 1/10/02 10:26:00 AM
Acquisition Started : 1/10/02 10:27:01 AM

Live Time: 1800.0 seconds Real Time: 1803.3 seconds

ISOCS Calabration : 4883 PLATE
Energy Calibration Used Done On : 2/27/01
Efficiency Calibration Used Done On : 1/10/02

## P E A K  A N A L Y S I S  R E P O R T

| Peak No. | Peak centroid | Energy (keV) | Net Peak Area | Net Area Uncert. | Continuum Counts |
|---|---|---|---|---|---|
| 1 | 198.34 | 49.67 | 1.97E+002 | 53.15 | 2.29E+003 |
| 2 | 239.32 | 59.91 | 3.61E+004 | 914.66 | 2.06E+003 |
| 3 | 340.51 | 85.20 | 6.81E+002 | 53.43 | 2.16E+003 |
| 4 | 349.52 | 87.46 | 2.44E+002 | 47.92 | 2.18E+003 |
| 5 | 373.29 | 93.40 | 1.56E+002 | 45.04 | 2.20E+003 |
| 6 | 1408.67 | 352.16 | 8.16E+001 | 14.12 | 1.13E+002 |
| 7 | 2044.54 | 511.07 | 1.41E+002 | 15.08 | 6.39E+001 |
| 8 | 2335.42 | 583.77 | 7.55E+001 | 11.56 | 5.54E+001 |
| 9 | 2439.43 | 609.76 | 1.12E+002 | 13.12 | 4.75E+001 |
| 10 | 2647.99 | 661.89 | 4.43E+001 | 9.55 | 3.92E+001 |
| 11 | 7067.10 | 1766.31 | 4.77E+001 | 8.03 | 7.08E-001 |

## N U C L I D E  I D E N T I F I C A T I O N  R E P O R T

| Nuclide Name | Id Confidence | Energy (keV) | Yield (%) | Activity (uCi) | Activity Uncertainty |
|---|---|---|---|---|---|
| CS-137 | 0.998 | 661.65* | 85.12 | 1.93051E-003 | 4.20763E-004 |
| AM-241 | 0.994 | 59.54* | 35.70 | 3.48783E+000 | 2.90911E-001 |
| | | 125.28 | 0.00 | | |
| | | 335.40 | 0.00 | | |
| | | 662.42* @ | 0.00 | 4.56458E+002 | 9.94794E+001 |
| | | 722.70 | 0.00 | | |

## I N T E R F E R E N C E  C O R R E C T E D  R E P O R T

| Nuclide Name | Nuclide Id Confidence | Wt mean Activity (uCi/kg ) | Wt mean Activity Uncertainty |
|---|---|---|---|
| CS-137 | 0.998 | 1.915759E-003 | 4.207324E-004 |
| AM-241 @ | 0.994 | 3.487832E+000 | 2.909106E-001 |

? = nuclide is part of an undetermined solution
X = nuclide rejected by the interference analysis
@ = nuclide contains energy lines not used in Weighted Mean Activity

Errors quoted at 1.000 sigma

**********
***** N U C L I D E  M D A  R E P O R T *****
**********

| | Nuclide Name | Energy (keV) | Yield (%) | Line MDA (uCi/kg ) | Nuclide MDA (uCi/kg ) | Activity (uCi/kg ) |
|---|---|---|---|---|---|---|
| | CO-60 | 1173.22 | 100.00 | 2.5552E-003 | 2.33E-003 | 1.9428E-003 |
| | | 1332.49 | 100.00 | 2.3314E-003 | | 6.8982E-004 |
| | CS-134 | 475.35 | 1.46 | 1.5139E-001 | 2.43E-003 | 3.3613E-002 |
| | | 563.23 | 8.38 | 2.6985E-002 | | -1.7039E-002 |
| | | 569.32 | 15.43 | 1.4828E-002 | | 1.8845E-003 |
| | | 604.70 | 97.60 | 2.9320E-003 | | -1.3747E-003 |
| | | 795.84 | 85.40 | 2.4275E-003 | | 1.8669E-003 |
| | | 801.93 | 8.73 | 2.4835E-002 | | 1.2371E-003 |
| | | 1038.57 | 1.00 | 2.3449E-001 | | 1.4575E-002 |
| | | 1167.94 | 1.80 | 1.3581E-001 | | -6.0463E-002 |
| | | 1365.15 | 3.04 | 6.9073E-002 | | 2.4669E-002 |
| + | CS-137 | 661.65* | 85.12 | 1.3889E-003 | 1.39E-003 | 1.9305E-003 |
| | NP-237 | 300.17 | 6.20 | 4.0012E-002 | 6.61E-003 | -1.2533E-002 |
| | | 312.00 | 36.00 | 6.6138E-003 | | -1.5284E-003 |
| | | 340.60 | 4.20 | 5.7289E-002 | | 4.4344E-002 |
| | | 375.00 | 0.68 | 3.1572E-001 | | 1.6040E-001 |
| | | 415.60 | 1.75 | 1.2439E-001 | | -1.2226E-001 |
| | Pu-239 | 129.28 | 0.01 | 1.0795E+002 | 1.08E+002 | -2.1993E+001 |
| | | 375.00 | 0.00 | 1.3568E+002 | | 6.8933E+001 |
| | | 413.70 | 0.00 | 1.4569E+002 | | -8.2846E+001 |
| | | 451.50 | 0.00 | 1.1767E+003 | | 2.1543E+002 |
| + | AM-241 | 59.54* | 35.70 | 2.0697E-002 | 2.07E-002 | 3.4878E+000 |
| | | 125.28 | 0.00 | 1.7218E+002 | | 3.5064E+001 |
| | | 335.40 | 0.00 | 4.7340E+002 | | -1.2530E+002 |
| | | 662.42* | 0.00 | 3.2841E+002 | | 4.5646E+002 |
| | | 722.70 | 0.00 | 1.8020E+003 | | 1.2534E+003 |
| | PU-241 | 114.00 | 0.02 | 3.2379E+001 | 3.24E+001 | 8.9387E+000 |
| | | 332.60 | 0.00 | 8.0262E+001 | | -5.8528E+001 |
| | CM-243 | 209.70 | 3.27 | 8.7566E-002 | 1.71E-002 | 4.3996E-002 |
| | | 228.18 | 10.56 | 2.5506E-002 | | -1.9650E-002 |
| | | 277.60 | 14.00 | 1.7124E-002 | | -1.5246E-002 |

+ = Nuclide identified during the nuclide identification
* = Energy line found in the spectrum
> = MDA value not calculated
@ = Half-life too short to be able to perform the decay correction

N U C L I D E  T O T A L S

| Nuclide | Mass (g) |
|---|---|