START

ORIGINAL

789

0025411

Rockwell Hanford Operations

| SUPPORTING DOCUMENT | Number | Rev. Ltr./ Chg. No. | Page A of |
|---|---|---|---|
| PROGRAM: Waste Management | SD- WM-SAR-013 | REV 0 | Total Pages 784 |

Document Title:

B Plant Safety Analysis Report

Baseline Document ☐ Yes ☒ No

WBS No. or Work Package No.

WD24

Key Words:

B Plant, Safety Analysis Report, Building 221-B

Prepared by (Name and Dept. No.)

Roger G. Sewell

R. G. Sewell 72950

Date 7/85

See reverse side for additional approvals

THIS DOCUMENT IS FOR USE IN PERFORMANCE OF WORK UNDER CONTRACTS WITH THE U.S. DEPARTMENT OF ENERGY BY PERSONS OR FOR PURPOSES WITHIN THE SCOPE OF THESE CONTRACTS. DISSEMINATION OF ITS CONTENTS FOR ANY OTHER USE OR PURPOSE IS EXPRESSLY FORBIDDEN.

Abstract

This document is a Safety Analysis Report (SAR) for B Plant. This facility is used for removing long-lived radionuclides from high-level liquid radioactive wastes. The impacts of natural phenomena and those of normal and accident conditions during the operation of B Plant have been reviewed and analyzed in this SAR.

Because B Plant was not to have a current operating mission at the time of SAR completion, the safety analysis is based on the historical "worst case" for hazard/accident potential. This "worst case" has been historical Current Acid Waste (CAW) processing.

It is concluded that operation of B Plant can be conducted without undue risk to the health and safety of employees, the general public, and the environment.

NOT FOR PUBLIC DISSEMINATION

MAY CONTAIN UNCLASSIFIED CONTROLLED NUCLEAR INFORMATION SUBJECT TO SECTION 148 OF THE ATOMIC ENERGY ACT OF 1954, AS AMENDED (42 USC 2168). APPROVAL BY THE DEPARTMENT OF ENERGY PRIOR TO RELEASE IS REQUIRED.

| * | Distribution Name | Mail Address |
|---|---|---|
| | **Department of Energy-Richland Operations Office** | |
| * | C. R. DeLannoy | Fed/700 |
| * | N. T. Karagianes | Fed/700 |
| * | J. J. Krupar, Jr. | Fed/700 |
| * | D. M. Smith | Fed/700 |
| * | J. D. White | Fed/700 |
| * | J. W. Wukelic | Fed/700 |
| | **Pacific Northwest Laboratories** | |
| * | S. M. Gilchrist | 703/300 |
| * | J. M. Latkovich | 3764/300 |
| * | J. L. McElroy | RO/1222/3000 |
| * | G. L. Tingey | PSL/1160/3000 |
| | **Rockwell Hanford Operations** | |
| | J. F. Albaugh | 2750E/200E |
| * | W. B. Barton | 271B/200E |
| * | R. C. Beagley | 222T/200W |
| | G. F. Boothe | 2751E/200E |
| * | J. D. Briggs | 271B/200E |
| * | G. M. Christensen | 2750E/200E |
| | C. Defigh-Price | 2750E/200E |
| | J. C. Fulton | 2750E/200E |
| * | R. D. Gaines | 271B/200E |
| * | K. A. Gasper | MO-206/200E |
| | A. W. Graves | 2751E/200E |
| * | D. F. Hanlen | CDC/12/300 |

(Continued on reverse side)

*COMPLETE DOCUMENT (No asterisk, title page/summary of revision page only)

Release Stamp

JA 1993

OFFICIAL RELEASED

JUL 30 10 40 AM '85

Prepared By: _____

Used By: _____

BEST AVAILABLE COPY

A-6400-073 (R-2-83)

**Rockwell Hanford Operations**

| Page | Number |
|---|---|
| B | SD– WM-SAR-013 |

**SUPPORTING DOCUMENT**

Approvals

- [x] K. A. Kasper AER 7/25/85 — Program Office
- [x] W. E. Fulton 7-18-85 — Research and Engineering
- [x] E. L. Hubbard 7/18/85 — Plant Operations
- [x] Robert Jensen 7-18-85 — Safety (of Safety and Quality Assurance)
- [x] M. C. Davis 7/15/85 — Quality Assurance (of Safety and Quality Assurance)
- [ ] Training
- [ ] End Function
- [ ] End Function
- [x] Safety and Quality Assurance, Director 7/23/85
- [x] J. W. Patterson 7/24/85 — Plant Operations, Director; Waste Management Safety Committee B Approval Authority
- [ ]
- [ ]
- [x] Approval Authority 7/15/85

| * Distribution | Name | Mail Address |
|---|---|---|
| * | R. L. Hibbard | 271B/200E |
| * | R. Jacobs | 2751E/200E |
| * | R. J. Jenson | 2751E/200E |
| * | S. M. Joyce | 271B/200E |
| * | A. W. Lilly | 222T/200W |
| * | E. E. Morris | MO-222/200E |
| * | J. W. Patterson | 2750E/200E |
| | R. D. Prosser | 2750E/200E |
| | I. E. Reep | MO-206/200E |
| * | D. A. Reynolds | 2750E/200E |
| * | F. M. Laiza | 2750E/200E |
| * | W. E. Poling | 2750E/200E |
| * | L. L. Powers | MO-206/200E |
| * | L. W. Roddy | 202A/200E |
| | J. H. Roecker | 2750E/200E |
| * | W. P. Kunkel | 2751E/200E |
| * | D. F. Salsman | 2101M/200E |
| | B. J. Saueressig | 2751E/200E |
| * | R. G. Sewell | 2751E/200E |
| * | S. P. Singh | 271B/200E |
| * | R. C. Stupka | 2751E/200E |
| * | T. B. Veneziano | 2750E/200E |
| * | J. L. Watkins | MO-400/200E |
| * | D. D. Wodrich | 2750E/200E |
| * | L. C. Mercado | MO-206/200E |
| * | R. D. Wojtasek | 2750E/200E |
| | Technical Publications (3) | |
| * | J. E. Brown | 2751E/200E |
| | Safety Analysis Files (2) | |
| * | R. D. Lindenmeier | 2751E/200E |

BEST AVAILABLE COPY

# B PLANT SAFETY ANALYSIS REPORT

R. G. Sewell

Safety Analysis
Safety and Quality Assurance
Rockwell Hanford Operations

July 1985

Prepared for the United States
Department of Energy under
Contract DE-AC06-77RL01030

Rockwell International
Rockwell Hanford Operations
P. O. Box 800
Richland, Washington 99352

## ACKNOWLEDGEMENTS

The following persons have provided significant technical input to this document:

M. E. Johnson, Research and Engineering Function, B Plant Process Engineering

W. E. Poling, Research and Engineering Function, Waste Management Systems Engineering Department, Waste Management Process Group, Waste Management Process Design Unit

W. C. Rice, Safety and Quality Assurance Function, Quality Assurance Program Development Department, Quality Program Assessment Group

S. P. Singh, Research and Engineering Function, B Plant Process Engineering Group

L. N. Sutton, Safety and Quality Assurance Function, Radiological Protection Department, Radiological Engineering and Effluent Controls Group, 200-W Area Facilities Support Unit, Radiological Analysis Team

T. M. Tanner, Safety and Quality Assurance Function, Radiation Protection Department, Radiological Engineering and Effluent Controls Group, 200-E Area Facilities Support Group

R. B. Wolf II, Research and Engineering Function, B-Plant Process Engineering Group

CONTENTS


1.0 Introduction and General Description of B Plant ..... 1-1
1.1 Introduction ..... 1-1
1.2 General Facility Description ..... 1-1
1.2.1 Principal Design Criteria ..... 1-6
1.2.2 Engineered Safety Systems and Emergency Features ..... 1-6
1.2.3 Instrumentation, Control, Electrical, and Auxiliary Systems ..... 1-6
1.2.4 Management Systems for B Plant--Generated Radioactive Waste ..... 1-6
1.2.5 General Layout of Major Structures ..... 1-9
1.2.6 Process Description ..... 1-9
1.3 Scope ..... 1-9
1.4 Limit of Applicability ..... 1-9

2.0 Summary Safety Analysis ..... 2-1
2.1 Radiological Impact of Normal Operations ..... 2-1
2.2 Radiological Impact of Natural Events ..... 2-2
2.3 Radiological Impact From Accidents and Abnormal Operations ..... 2-2
2.3.1 Natural Forces Considerations ..... 2-2
2.3.2 Total Loss of Electrical Power ..... 2-5
2.3.3 Hydrogen or Ammonia Accumulation and Explosion ... 2-5
2.3.4 Fire ..... 2-6
2.3.5 Vessel Coil Failure ..... 2-6
2.3.6 Loss of Cooling Water ..... 2-6
2.3.7 Loss of Instrument or Process Compressed Air ..... 2-6
2.3.8 Temperature Excursion ..... 2-7
2.3.9 Cell Drain Line Failure ..... 2-7
2.3.10 Nitric Acid Misrouted to Ion Exchange Column ..... 2-7
2.4 Non-Radiological Impact From Accidents and Abnormal Operations ..... 2-7
2.5 References ..... 2-8

3.0 Site Characteristics ..... 3-1
3.1 General ..... 3-1
3.2 Geography and Demography of Site ..... 3-1
3.2.1 Site Location ..... 3-1
3.2.2 Site Description ..... 3-1
3.2.3 Population Distribution and Trends ..... 3-7
3.3 Nearby Industrial, Transportation, and Military Facilities ..... 3-11
3.4 Regional Climatology and Meteorology ..... 3-12
3.5 Geology and Hydrology ..... 3-14
3.6 Volcanic Ashfall ..... 3-15
3.7 Seismology ..... 3-15
3.8 References ..... 3-16

4.0 Principal Design Criteria ..... 4-1
4.1 Classification of Structures, Components, and Systems .... 4-1
4.1.1 Quality Assurance Levels ..... 4-2
4.1.2 Guidelines for Assignment of Facility Operating Conditions to an Accident ..... 4-3
4.1.3 Definition of a Safety Function ..... 4-3
4.1.4 Definition of a Single Failure ..... 4-4
4.1.5 Interface Requirements ..... 4-4
4.2 Protection Against Natural Phenomenon ..... 4-4
4.3 Missile Protection ..... 4-7
4.4 Electric Power Systems ..... 4-8
4.5 Instrumentation and Protection System ..... 4-8
4.6 Cooling Water and Water Supply Systems ..... 4-9
4.7 Fire Prevention and Protection ..... 4-9
4.8 Nuclear Criticality Safety ..... 4-10
4.9 Radioactive By-Product and Effluent Management Systems ..... 4-11
4.10 Radiation Protection System ..... 4-13
4.11 Decontamination and Decommissioning ..... 4-13
4.12 Conduct of Operation ..... 4-14
4.13 Operating Control and Limits ..... 4-14
4.14 Quality Assurance ..... 4-14
4.15 References ..... 4-15

5.0 Facility Description ..... 5-1
5.1 Summary Description ..... 5-1
5.1.1 Site Location and Facilities Layout ..... 5-1
5.1.2 Principal Features ..... 5-2
5.2 Confinement Systems ..... 5-6
5.3 Secondary Containment Barrier ..... 5-6
5.3.1 221-B Canyon Structure and 271-B Services Building ..... 5-6
5.3.2 271-B Services Building Facility Description ..... 5-7
5.3.3 221-B Canyon Structure Facility Description ..... 5-7
5.3.4 212-B Cask Station ..... 5-25
5.4 Ventilation System--221-B Canyon, 212-B Cask Station and 271-B Service Building ..... 5-31
5.4.1 271-B Service Building Ventilation System ..... 5-32
5.4.2 Gallery Ventilation System ..... 5-32
5.4.3 Canyon Ventilation System ..... 5-40
5.4.4 291-B Exhaust Ventilation System ..... 5-50
5.4.5 291-B Fan House ..... 5-60
5.4.6 Safety Consideration and Control ..... 5-61
5.5 High-Efficiency Particulate Air Filter System ..... 5-63
5.5.1 Standby Filter Cells ..... 5-64
5.5.2 Water Seals on Inlet and Outlet of Filter Cells .. 5-67
5.5.3 Operation of Jets for Seals and Sumps ..... 5-68
5.5.4 Estimate of Radionuclide Inventory on the Exhaust Ventilation System ..... 5-68

5.5.5 Safety Consideration and Control ..... 5-70
5.5.6 Survivability of Filter Cells ..... 5-79
5.6 Sand Filter Emergency Standby System ..... 5-81
5.6.1 Filter Test ..... 5-83
5.6.2 Emergency Operation of Sand Filter ..... 5-85
5.6.3 Survivability of Sand Filter ..... 5-87
5.7 291-B Stack and 292-B Stack Monitoring Building ..... 5-87
5.7.1 292-B Stack Monitoring Building ..... 5-87
5.7.2 Survivability of Exhaust Ventilation Stack 291-B ..... 5-91
5.7.3 Survivability of 292-B Building ..... 5-91
5.8 Primary Containment ..... 5-92
5.8.1 Waste Processing Plant Equipment in Canyon Cells ..... 5-92
5.8.2 Vessel Vent Systems ..... 5-134
5.9 Auxiliary Structures ..... 5-158
5.9.1 221-BC Building R-13 ..... 5-158
5.9.2 221-BB Condensate Building ..... 5-161
5.9.3 221-BF Effluent Control Building ..... 5-161
5.9.4 282-B and 282-BA Emergency Well Pump Houses ..... 5-166
5.9.5 211-B Tank Farm Cold Chemical Facilities ..... 5-171
5.9.6 217-B Demineralizer Building ..... 5-186
5.9.7 276-B Solvent Building ..... 5-188
5.10 Utilities and Fire Protection System ..... 5-189
5.10.1 Electricity ..... 5-189
5.10.2 Steam Supply System ..... 5-215
5.10.3 Water Supply System ..... 5-219
5.10.4 Compressed Air Systems ..... 5-228
5.10.5 Fire Protection System ..... 5-232
5.11 Maintenance System ..... 5-247
5.12 Combined Survivability Assessment of B Plant Facilities - System Integrity and Operability ..... 5-248
5.12.1 Survivability of 291-B Stack ..... 5-253
5.12.2 Survivability of Filters ..... 5-253
5.12.3 Equipment Qualification ..... 5-253
5.13 References ..... 5-253

6.0 Process Systems ..... 6-1
6.1 Introduction ..... 6-1
6.1.1 Current Acid Waste ..... 6-1
6.2 Head End Metathesis Process ..... 6-5
6.2.1 Clarification of Current Acid Waste ..... 6-10
6.2.2 Metathesis Process ..... 6-11
6.3 Phosphotungstic Acid Process ..... 6-11
6.3.1 Function ..... 6-12
6.3.2 Precipitation ..... 6-12
6.3.3 Centrifugation of Cesium Solids ..... 6-12
6.3.4 Safety Consideration and Off-Normal Conditions ..... 6-14

6.4 Cesium Purification by Ion-Exchange ..... 6-15
6.4.1 Determination of Breakthrough During Loading and Elution ..... 6-17
6.4.2 Ion-Exchange Media for Cell 18 and Cell 38 Ion Exchange Processes ..... 6-18
6.4.3 Cell 18 - Ion Exchange Process ..... 6-21
6.4.4 Cell 38 - Ion Exchange Process ..... 6-24
6.4.5 Safety Consideration, Control and Off-Normal Events ..... 6-26
6.5 Strontium Recovery by Solvent Extraction ..... 6-32
6.5.1 Extraction, Scrub, Partitioning, Stripping, Treatment and Concentration and Storage of Strontium and Organics ..... 6-35
6.5.2 Safety Consideration and Off-Normal Conditions ... 6-39
6.6 Strontium Purification ..... 6-46
6.6.1 Sulfate Precipitation ..... 6-48
6.6.2 Caustic Strike ..... 6-55
6.7 Process Waste Streams ..... 6-66
6.7.1 High-Level Liquid Waste ..... 6-66
6.7.2 Low-Level Liquid Waste ..... 6-66
6.7.3 Process Condensate ..... 6-75
6.7.4 Steam Condensate ..... 6-78
6.7.5 Solid Process Wastes ..... 6-79
6.7.6 BCE - Chemical Sewer System ..... 6-79
6.7.7 Cooling Water ..... 6-83
6.8 General Safety Considerations and Control ..... 6-86
6.8.1 Hydrogen Formation ..... 6-86
6.8.2 Ammonia Safety ..... 6-90
6.8.3 Organic Solvent ..... 6-91
6.8.4 Radioactive Contamination ..... 6-94
6.8.5 Localized Heat Areas ..... 6-95
6.8.6 Chemical Reactions ..... 6-95
6.8.7 Tank Overfill ..... 6-95
6.8.8 High Pressure Spray Pump ..... 6-96
6.8.9 Loss of Utilities ..... 6-96
6.8.10 Cell Drain Line Failure ..... 6-98
6.8.11 Vessel Coil Failure ..... 6-99
6.8.12 Criticality ..... 6-100
6.9 Process Control Centers ..... 6-100
6.9.1 Control Panels in the Operating Gallery ..... 6-101
6.9.2 Dispatcher's Office ..... 6-101
6.9.3 Alarms in the Dispatcher's Office ..... 6-102
6.10 Process Instrumentation and Control Systems ..... 6-103
6.10.1 Instrument Application Category ..... 6-103
6.10.2 Listing of Instrumentation ..... 6-104
6.10.3 Liquid Effluents ..... 6-104
6.11 Process Sampling ..... 6-104
6.11.1 Standard Sampler ..... 6-105
6.11.2 Dual Sampler ..... 6-105
6.11.3 pH Probe Sampler ..... 6-105

6.11.4 Sampling ..... 6-108
6.11.5 Safety Consideration and Control ..... 6-111
6.12 References ..... 6-112

7.0 Waste Confinement and Effluent Management ..... 7-1
7.1 Airborne Effluents ..... 7-1
7.1.1 221-B Canyon Ventilation Exhaust ..... 7-1
7.1.2 Process Vessel Ventilation Systems ..... 7-10
7.1.3 221-B Gallery Exhaust System ..... 7-16
7.1.4 221-BB Exhaust System ..... 7-17
7.1.5 221-BC Exhaust System ..... 7-20
7.1.6 221-BF Exhaust System ..... 7-21
7.1.7 212-B Exhaust System ..... 7-23
7.1.8 Aqueous Makeup ..... 7-23
7.1.9 211-B Tank Farm ..... 7-24
7.2 Liquid Effluents ..... 7-24
7.2.1 Cooling Water Waste Stream ..... 7-24
7.2.2 Process Condensate Liquid Effluent ..... 7-32
7.2.3 Steam Condensate ..... 7-37
7.2.4 Chemical Waste ..... 7-40
7.2.5 Sanitary Waste ..... 7-44
7.2.6 Byproduct (High-Level) Waste ..... 7-45
7.3 Solid Waste ..... 7-45
7.3.1 Failed Equipment ..... 7-46
7.3.2 Trash ..... 7-47
7.4 Specialized Waste and Recoverable Items ..... 7-47
7.4.1 Recoverable Equipment and Tools ..... 7-47
7.4.2 Contaminated Laundry ..... 7-48
7.4.3 Wastes Subject to Specialized Disposal ..... 7-48
7.4.4 Waste Encapsulation and Storage Facility Waste Drums ..... 7-49
7.5 References ..... 7-49

8.0 Health Protection ..... 8-1
8.1 Introduction ..... 8-1
8.2 Safety Management and Organization ..... 8-2
8.2.1 Safety and Quality Assurance (S&QA) Function ..... 8-2
8.2.2 Safety Committees ..... 8-7
8.2.3 Communications and Manuals ..... 8-7
8.2.4 Audits and Inspections ..... 8-8
8.2.5 Design and Document Safety Review ..... 8-9
8.3 Training ..... 8-9
8.3.1 General ..... 8-9
8.3.2 B Plant Personnel ..... 8-10
8.4 Health Physics Program ..... 8-12
8.4.1 Personnel Dose Assessment - Dosimetry ..... 8-12
8.4.2 Exposure Control - B Plant ..... 8-14
8.4.3 Protective Equipment ..... 8-16
8.4.4 Radiological Controlled Areas ..... 8-16
8.4.5 Health Physics Instrumentation ..... 8-19
8.5 References ..... 8-22

9.0 Accident/Systems Safety Analysis ..... 9-1
9.1 System Safety Analysis Process ..... 9-1
9.2 Abnormal Occurrences and Accidents ..... 9-1
9.3 Hazards Review ..... 9-3
9.4 Determination of Accidents for Analysis ..... 9-3
9.5 Accident Risk Assessment and Hazard Classification ..... 9-6
9.5.1 Probability of Occurrence ..... 9-6
9.5.2 Severity of Consequences ..... 9-8
9.5.3 Risk and Risk Acceptance ..... 9-9
9.5.4 Hazard Classification ..... 9-9
9.6 Accident Consequences ..... 9-9
9.6.1 Breach of Confinement ..... 9-12
9.6.2 Breach of Containment ..... 9-20
9.6.3 Radiation Exposure ..... 9-22
9.6.4 Personal Injury ..... 9-22
9.7 Scenarios of Potential Accidents ..... 9-26
9.8 Natural Events Considerations ..... 9-47
9.8.1 Tornado Considerations ..... 9-48
9.8.2 Volcanic Ash Considerations ..... 9-48
9.8.3 Range Fire Considerations ..... 9-48
9.8.4 Seismic Event ..... 9-48
9.9 Total Loss of Electrical Power ..... 9-68
9.9.1 Power Provisions ..... 9-68
9.9.2 Cause and Source ..... 9-70
9.9.3 Energy Release ..... 9-70
9.9.4 General Effects ..... 9-70
9.9.5 Containment System Effects ..... 9-71
9.9.6 Occupational Personnel Effects ..... 9-72
9.9.7 Confinement System Effects ..... 9-72
9.9.8 Onsite/Offsite Personnel Effects and Environmental Effects ..... 9-73
9.9.9 Secondary Effects ..... 9-73
9.9.10 Preventives ..... 9-73
9.9.11 Risk ..... 9-73
9.10 Hydrogen Accumulation and Explosion ..... 9-74
9.10.1 In-Tank Explosion in Cell ..... 9-75
9.10.2 Full Cell Hydrogen Explosion ..... 9-83
9.10.3 Full Canyon Hydrogen Explosion ..... 9-88
9.11 Ammonia Accumulation and Explosion ..... 9-88
9.11.1 In-Tank Ammonia Explosion ..... 9-89
9.11.2 Full Cell Ammonia Explosion ..... 9-94
9.12 Fire ..... 9-97
9.12.1 Cause and Source ..... 9-98
9.12.2 Energy Release ..... 9-98
9.12.3 Containment System Effects ..... 9-99
9.12.4 Occupational Personnel Effects ..... 9-100
9.12.5 Confinement System Effects ..... 9-100

9.12.6 Onsite/Offsite Personnel Effects ..... 9-105
9.12.7 Secondary Effects ..... 9-106
9.12.8 Preventives ..... 9-107
9.12.9 Risk ..... 9-108
9.13 Vessel Coil Failure ..... 9-108
9.13.1 Coil Failure, Heating and Cooling Service ..... 9-108
9.13.2 Coil Failure, Cooling Service Only ..... 9-111
9.14 Loss of Cooling Water ..... 9-119
9.14.1 Cause and Source ..... 9-119
9.14.2 Energy Release ..... 9-120
9.14.3 Containment System Effects ..... 9-120
9.14.4 Occupational Personnel Effects ..... 9-120
9.14.5 Confinement Systems Effects ..... 9-121
9.14.6 Onsite/Offsite Personnel Effects and Environmental Effects ..... 9-121
9.14.7 Secondary Effects ..... 9-121
9.14.8 Preventives ..... 9-121
9.14.9 Risk ..... 9-122
9.15 Loss of Instrument or Process Compressed Air ..... 9-122
9.15.1 Cause and Source ..... 9-123
9.15.2 Energy Release ..... 9-124
9.15.3 Containment System Effects ..... 9-124
9.15.4 Occupational Personnel Effects ..... 9-124
9.15.5 Confinement System Effects ..... 9-124
9.15.6 Onsite/Offsite Personnel Effects and Environmental Effects ..... 9-125
9.15.7 Secondary Effects ..... 9-125
9.15.8 Preventives ..... 9-125
9.15.9 Risk ..... 9-126
9.16 Temperature Excursion ..... 9-127
9.16.1 Cause and Source ..... 9-127
9.16.2 Energy Release ..... 9-128
9.16.3 Containment System Effects ..... 9-129
9.16.4 Occupational Personnel Effects ..... 9-129
9.16.5 Confinement System Effects ..... 9-129
9.16.6 Onsite/Offsite Personnel Effects and Environmental Effects ..... 9-129
9.16.7 Secondary Effects ..... 9-130
9.16.8 Preventives ..... 9-130
9.16.9 Risk ..... 9-131
9.17 Cell Drain Line Failure ..... 9-131
9.17.1 Cause and Source ..... 9-131
9.17.2 Energy Release ..... 9-132
9.17.3 Containment System Effects ..... 9-132
9.17.4 Occupational Personnel Effects ..... 9-132
9.17.5 Confinement System Effects ..... 9-132
9.17.6 Onsite/Offsite Personnel Effects and Environmental Effects ..... 9-132
9.17.7 Secondary Effects ..... 9-133
9.17.8 Preventives ..... 9-133
9.17.9 Risk ..... 9-134

9.18 Nitric Acid Misrouted to Ion Exchange Column ..... 9-134
9.18.1 Cause and Source ..... 9-134
9.18.2 Energy Release ..... 9-135
9.18.3 Containment System Effects ..... 9-136
9.18.4 Occupational Personnel Effects ..... 9-136
9.18.5 Confinement System Effects ..... 9-136
9.18.6 Onsite/Offsite Personnel Effects ..... 9-136
9.18.7 Secondary Effects ..... 9-136
9.18.8 Preventives ..... 9-136
9.18.9 Risk ..... 9-136
9.19 Nitric Acid Bulk Storage Tank Collapse ..... 9-136
9.19.1 Cause and Source ..... 9-137
9.19.2 Environmental Effects ..... 9-137
9.19.3 Occupational Personnel Effects ..... 9-138
9.19.4 Onsite/Offsite Personnel Effects ..... 9-138
9.19.5 Secondary Effects ..... 9-140
9.19.6 Preventives ..... 9-140
9.19.7 Risk ..... 9-140
9.20 Anhydrous Ammonia Bulk Storage Tank Collapse ..... 9-141
9.20.1 Cause and Source ..... 9-141
9.20.2 Environmental Effects ..... 9-141
9.20.3 Occupational Personnel Effects ..... 9-141
9.20.4 Onsite/Offsite Personnel Effects ..... 9-141
9.20.5 Secondary Effects ..... 9-142
9.20.6 Preventives ..... 9-142
9.20.7 Risk ..... 9-142
9.21 Carbon Dioxide Bulk Storage and Collapse ..... 9-143
9.21.1 Cause and Source ..... 9-143
9.21.2 Environmental Effects ..... 9-143
9.21.3 Occupational Personnel Effects ..... 9-143
9.21.4 Onsite/Offsite Personnel Effects ..... 9-144
9.21.5 Secondary Effects ..... 9-144
9.21.6 Preventives ..... 9-144
9.21.7 Risk ..... 9-144
9.22 - 9.29 (Reserved) ..... 9-144
9.30 References ..... 9-145

10.0 Conduct of Operations ..... 10-1
10.1 Rockwell Policy ..... 10-1
10.2 B Plant Organization ..... 10-1
10.3 Personnel Safety Responsibilities ..... 10-1
10.3.1 Key Individuals ..... 10-1
10.3.2 Operations Personnel ..... 10-3
10.3.3 Support Functions ..... 10-4
10.4 Operations Planning and Execution ..... 10-4
10.5 Training Programs ..... 10-5
10.5.1 Initial Training ..... 10-5
10.5.2 Retraining and Reexamination ..... 10-6
10.6 Operations Procedures ..... 10-6
10.7 References ..... 10-7

11.0 Operational Safety Requirements ..... 11-1
11.1 Introduction ..... 11-1
11.2 Definitions ..... 11-1
11.2.1 Title ..... 11-1
11.2.2 Applicability ..... 11-1
11.2.3 Objective ..... 11-1
11.2.4 Requirements ..... 11-2
11.2.5 Bases ..... 11-3
11.2.6 Recovery ..... 11-3
11.2.7 Audit Point ..... 11-4
11.3 Revisions ..... 11-4
11.4 Individual OSRs ..... 11-5
11.4.1 Radiolytic Hydrogen Concentration ..... 11-5
11.4.2 Ammonia Concentration ..... 11-7
11.4.3 Flammable Organic Solvents ..... 11-9
11.4.4 Confinement Systems ..... 11-12
11.4.5 Fire Protection System ..... 11-14
11.5 References ..... 11-15

12.0 Quality Assurance ..... 12-1
12.1 Organizations ..... 12-1
12.2 Quality Assurance Program ..... 12-1
12.3 Personnel Training ..... 12-1
12.4 Design Support ..... 12-4
12.5 Procurement ..... 12-4
12.6 Inspection ..... 12-4
12.7 Calibration and Control ..... 12-5
12.8 Incidents, Nonconformances, and Corrective Action ..... 12-5
12.9 Quality Assurance Laboratory ..... 12-5
12.10 References ..... 12-5

FIGURES:

1-1 Hanford Site ..... 1-2
1-2 B Plant and WESF Facilities ..... 1-3
1-3 B Plant with WESF Attached in Foreground ..... 1-4
1-4 Physical Relationship of Principal Structures to B Plant ..... 1-5
1-5 Simplified Current Acid Waste Processing Flow ..... 1-10
3-1 Location of Hanford Site in Washington State ..... 3-2
3-2 Hanford Site Map ..... 3-3
3-3 Detailed Map of the 200 East Area ..... 3-5
3-4 Communities in the Hanford Site Vicinity ..... 3-8
3-5 Estimated Geographic Distribution of the 1981 Population Within a 50-Mile Radius of the Hanford Meteorological Station ..... 3-8
3-6 Estimated Geographic Distribution of the 1990 Population Within a 50-Mile Radius of the Hanford Meteorological Station ..... 3-9

4-1 Map of Flood Potential ..... 4-6
5-1 Relative Locations of Waste Fractionization, Encapsulation, and Auxiliary Facilities ..... 5-4
5-2 Cutaway of 221-B ..... 5-5
5-3 Floor Plans of the 271-B Service Building ..... 5-8
5-4 Typical Cross-Section of 271-B Service Building and 221-B Canyon Structure ..... 5-10
5-5 Process Cell Sections (Standard, Electrical, and Instrument Lines) ..... 5-11
5-6 Process Cell Sections (Process and Utilities, Electrical, Instrument, Steam, and Chemical) ..... 5-12
5-7 Nonprocess Section Cells 1, 2, 3, and 4 ..... 5-13
5-8 Nonprocess Cell 3, Railroad Tunnel ..... 5-14
5-9 Nonprocess Cell 4, Waste Encapsulation Storage Facility Solid Waste Interim Storage ..... 5-16
5-10 Nonprocess Cell 40, Sample Cave ..... 5-17
5-11 Hot Pipe Trench Cross-Sections ..... 5-20
5-12 Cell Drainage Header to Tank 10-1 ..... 5-21
5-13 Canyon Exhaust Ventilation Duct ..... 5-24
5-14 212-B Cask Station ..... 5-26
5-15 Ventilation Flow Pattern of the Gallery Ventilation System ..... 5-33
5-16 Electrical Gallery Supply System (Fans SF-1 and SF-2) ..... 5-39
5-17 Pipe Gallery Exhaust System Fans ..... 5-41
5-18 Canyon Ventilation System ..... 5-43
5-19 Ventilation Diagram of the B Plant Processing and Service Areas ..... 5-46
5-20 The 212-B Cask Station Ventilation System ..... 5-48
5-21 212-B Operating Gallery and Entrance Ventilation System: The K2 System ..... 5-49
5-22 The 212-B Surveillance, Cask Handling, and Cell Supply System: The K1 System ..... 5-51
5-23 Fan Curves for the Electric Motor Drive Fans ..... 5-53
5-24 Fan Curves for the Steam Turbine Drive Fans ..... 5-55
5-25 Canyon Ventilation, Instrumentation, and Control System ..... 5-57
5-26 The 291-B Exhaust Ventilation System A and B Exhaust Filters ..... 5-65
5-27 Exhaust Ventilation System Location of Inspection Holes and Port for DOP Testing ..... 5-66
5-28 Typical Sand Filter Cross Section ..... 5-82
5-29 Operating Characteristics of the Sand Filter ..... 5-84
5-30 The 291-B Generic Stack Record Rack Assembly ..... 5-89
5-31 B Plant Cell Allocation ..... 5-93
5-32 Canyon Tank 1 ..... 5-96
5-33 Canyon Tank 2 ..... 5-97
5-34 Concentrators ..... 5-105
5-35 Condensers ..... 5-106
5-36 Waste Concentrator Assembly E-23-3 ..... 5-108

5-37 Plan View Concentrator Assembly ..... 5-109
5-38 Cesium Concentrator E-38-6 ..... 5-110
5-39 Concentrator Tube Bundle Control System ..... 5-112
5-40 B Plant Centrifuge Bowl ..... 5-114
5-41 Total Metallic Impurities Concentrated - (M) versus Precipitation Volume ..... 5-116
5-42 Cell 18 Ion Exchange Column ..... 5-118
5-43 Cell 38 Ion Exchange Column ..... 5-119
5-44 Solvent Extraction 1A Column ..... 5-122
5-45 Solvent Extraction 1B Column ..... 5-123
5-46 Solvent Extraction 1C Column ..... 5-124
5-47 Solvent Extraction 1S Column ..... 5-125
5-48 Ammonia Scrub Tower ..... 5-135
5-49 Offgas Heater ..... 5-136
5-50 Heater Assembly ..... 5-137
5-51 Vessel Vent Condenser Assembly E-22-4 ..... 5-138
5-52 Vessel Vent System No. 1 ..... 5-143
5-53 Vessel Vent System No. 2 ..... 5-145
5-54 Instrumentation and Control for Vessel Vent No. 1 ..... 5-148
5-55 Instrumentation and Control for Vessel Vent No. 2 ..... 5-149
5-56 The 221-BC Building ..... 5-159
5-57 The 221-BC Ventilation System ..... 5-162
5-58 The 221-BB Building Ventilation System ..... 5-165
5-59 The 221-BF Airflow and Control Diagram ..... 5-167
5-60 Equipment Information - 221-BF ..... 5-169
5-61 Tank Farm Plot Plan ..... 5-172
5-62 Carbon-dioxide Storage and Header System ..... 5-176
5-63 Tank SN-172 Ammonia Storage System ..... 5-178
5-64 Aqueous Makeup Area ..... 5-184
5-65 Demineralizer Unit ..... 5-187
5-66 Electrical Diagram 1 ..... 5-191
5-67 Electrical Diagram 2 ..... 5-197
5-68 Electrical Diagram 3 ..... 5-203
5-69 Basic Steam Supply System, 221-B Building ..... 5-216
5-70 The 211-B Steam and Water Headers ..... 5-217
5-71 The 212-B Building Steam, Chemical, Process, Air and Instrument Air Lines ..... 5-218
5-72 Raw and Sanitary Water Distribution to B Plant ..... 5-221
5-73 Sanitary Water System ..... 5-222
5-74 Demineralized Water Flow and 111 Header System ..... 5-223
5-75 Raw Water System in the 221-B Area ..... 5-225
5-76 The 212-B Building Sanitary Demineralizer and Raw Water Line ..... 5-226
5-77 Flow Diagram of 221-B Process Air System ..... 5-229
5-78 Instrument Air System Plan ..... 5-231
5-79 B Plant Water Lines and Valves ..... 5-235
5-80 Foam Concentrate Fire Protection System ..... 5-244
6-1 B Plant Head-End Process for Current Acid Wastes ..... 6-7
6-2 Head-End Metathesis Process ..... 6-8
6-3 Feed Preparation--Current Acid Waste ..... 6-9
6-4 Cesium Recovery by Phosphotungstic Acid Precipitation ..... 6-13

6-5 Gamma-Monitor Strip Chart ..... 6-16
6-6 First Cycle Cesium Purification Flow Diagram ..... 6-22
6-7 Final Cycle Cesium Purification Flow Diagram ..... 6-25
6-8 Tank 18-3 Weight Factor Control System ..... 6-31
6-9 Ammonia, Carbon-Dioxide, and Air Purge System ..... 6-33
6-10 Strontium Solvent Extraction--Waste Fractionization Plant ..... 6-34
6-11 Strontium Purification-Sulfate Precipitation Flow Diagram ..... 6-47
6-12 Strontium Purification-Caustic Strike Flow Diagram ..... 6-49
6-13 BCP and BCS Condensate Pit ..... 6-76
6-14 BCP and BCS Condensate Routing ..... 6-77
6-15 Chemical Sewer - B Plant Area Map ..... 6-82
6-16 Cooling Water Disposal at B Plant ..... 6-85
6-17 Time to Reach Boiling Point and Dry Out, Rate of Temperature Rise vs. MCi Content of Tank ..... 6-89
6-18 Standard Sampler ..... 6-106
6-19 pH Probe Sampler ..... 6-107
6-20 Sample Transporter ..... 6-109
6-21 Bulk Sample Container ..... 6-110
7-1 Canyon Exhaust Ventilation System ..... 7-3
7-2 Instrumentation and Control for Vessel Vent No. 1 ..... 7-11
7-3 Vessel Ventilation System No. 1 ..... 7-12
7-4 Vessel Ventilation System No. 2 ..... 7-18
7-5 296-B-13 Stack Details ..... 7-22
7-6 Effluent Pipelines and Transfer Capabilities for Gable Mountain Pond and B-Pond ..... 7-27
7-7 B Plant Cooling Water Waste System ..... 7-30
7-8 B Plant Low-Level Waste Concentration Flow Diagram ..... 7-33
7-9 BCP System ..... 7-34
7-10 BCS System ..... 7-38
7-11 BCE Flow Diagram ..... 7-41
8-1 Organizational Chart ..... 8-3
8-2 Radiological Controlled Areas, B Plant ..... 8-17
8-3 Hand and Foot Counter Locations, B Plant ..... 8-21
8-4 Locations of Area Radiation Detection Instruments and CAMs in B Plant ..... 8-23
9-1 System Safety Analysis Process ..... 9-2
9-2 General Comparison Between Severity of Effects of Abnormal Occurrences and Accidents ..... 9-4
9-3 Generalized Event Tree for a Monitored Ventilation/ Exhaust System ..... 9-5
9-4 Risk Analysis ..... 9-7
9-5 Functional Diagrammatic Representation of the 221-B Canyon HEPA Filtration ..... 9-13
9-6 Functional Diagrammatic Representation of the Vessel Vent System's HEPA Filtration ..... 9-14
9-7 Functional Diagrammatic Representation of EF-1 Through EF-7 Exhaust HEPA Filtration ..... 9-15
9-8 Probability for Loss of Confinement and Detection, 221-B Canyon HEPA Filtration System ..... 9-16

9-9 Probability for Loss of Confinement and Detection, VVS#2 ..... 9-18
10-1 Organization Chart of Fission Products Operations ..... 10-2
12-1 Quality Assurance Organization ..... 12-2

TABLES:

1-1 B Plant Structures and Their Functions ..... 1-7
2-1 First-Year Commitments and Risks (Worst Case) to Onsite/ Offsite Individuals (Accidents Affecting B Plant) ..... 2-3
3-1 Active Hanford Nuclear Areas ..... 3-12
4-1 Summary of the General Safety Guidelines for B Plant Operation in Terms of Probability of Occurrence and Consequence Guidelines ..... 4-4
5-1 Specific Buildings Covered Within the 221-B Waste Fractionization Area ..... 5-3
5-2 Gallery Centrifugal Exhaust and Supply Fans ..... 5-34
5-3A Humidifier Data for Electrical Gallery Supply Fans ..... 5-35
5-3B Air Monitors for the Exhaust Fans ..... 5-35
5-4 Filter Box Information for Gallery Supply and Exhaust Fans ..... 5-36
5-5 Reheat, Preheat, and Sump Heaters for Gallery Fans ..... 5-37
5-6 Radionuclide Inventory on 291-B Filter Cells ..... 5-69
5-7 $^{137}Cs$ Radionucide Inventory on 291-B Filter Cells ..... 5-69
5-8 Estimated Absorbed Dose High-Efficiency Particulate Air Filters in 291-B Filter Cells ..... 5-71
5-9 Radionuclide Concentration versus Temperature on Filter Media ..... 5-72
5-10 Information on a Filter Fire ..... 5-73
5-11 Design and Operating Condition of Equipment ..... 5-95
5-12 Canyon Tanks Information ..... 5-98
5-13 Concentrators and Condensers ..... 5-104
5-14 Solvent Extraction Columns ..... 5-121
5-15 List of Pumps ..... 5-127
5-16 List of Agitators ..... 5-129
5-17 Vessel Vent Systems ..... 5-140
5-18 Normal Operating Conditions for Vessel Vent No. 2 ..... 5-141
5-19 Off-Normal Conditions of Vessel Vent Systems No. 1 and 2 ..... 5-152
5-20 Ventilation Information for 221-BC ..... 5-163
5-21 Chemical Storage Tanks in 211-B Tank Farm ..... 5-173
5-22 Aqueous Makeup Tanks ..... 5-180
5-23 Chemical Headers to Operating Gallery Scale Tanks ..... 5-182
5-24 Equipment Pieces Fed by Feeder L-58 ..... 5-200
5-25 Equipment Pieces Fed by Feeder L-58 ..... 5-201
5-26 Normal Power Devices ..... 5-208
5-27 Emergency Power Devices ..... 5-208
5-28 Unscheduled Electrical Outages ..... 5-213
5-29 Fire Alarm Pullboxes in 221-B, 271-B, and Other B Plant Area Facilities ..... 5-239

5-30 The 212-B Fire Protection System ..... 5-245
5-31 The 284-E Powerhouse, Steam Supply System, and Emergency Electrical Power ..... 5-249
5-32 Evaluation of Filter Cells ..... 5-250
5-33 Evaluation of Equipment and Systems ..... 5-251
5-34 Evaluation of Cask Loading Station 212-B ..... 5-252
5-35 Evaluation of Tank Farm 211-B ..... 5-252
6-1 Composition of PUREX Wastes ..... 6-6
6-2 Off-Normal Conditions (Ion Exchange) ..... 6-27
6-3 Off-Standard Conditions (Solvent Extraction) ..... 6-40
6-4 Feed and Product Limitations, Decontamination Factor for Sulfate Strike ..... 6-51
6-5 Off-Normal Conditions (Sulfate Precipitation) ..... 6-56
6-6 Feed and Product Limitations Decontamination Factor for Caustic Strike ..... 6-60
6-7 Off-Normal Conditions--Caustic Strike Process ..... 6-64
6-8 B Plant Liquid Radioactive Waste Streams ..... 6-67
6-9 High-Level Waste Routes ..... 6-69
6-10 Low-Level Waste Sources Routed to TK-24-1 ..... 6-70
6-11 Operating Conditions for Low-Level Waste Concentration ..... 6-72
6-12 Off-Normal Conditions--Waste Concentrator ..... 6-74
6-13 Contributing Streams and Chemical Solutions Drained to B Plant Chemical Sewer ..... 6-81
6-14 Vessel Dilution Air Rates for Vessels Where Air is Introduced Below the Solution Level ..... 6-88
6-15 Vessel Dilution Air Rates for Vessels Where Air is Introduced Above the Solution Level ..... 6-88
6-16 Heat of Combustion ..... 6-93
6-17 Flash Point and Ignition Temperatures ..... 6-93
6-18 Burning Rate of NPH ..... 6-93
7-1 Summary of Major B Plant Airborne Effluent Release Points ..... 7-2
7-2 Typical B Plant Airborne Radioactive Effluent Discharge Data ..... 7-2
7-3 Routine Surveillance of 291-B-1 Effluent Systems ..... 7-8
7-4 Fission Product Concentrations in PUREX Zirflex Acid Waste ..... 7-13
7-5 Routine Surveillance of 296-B-5 Effluent Systems ..... 7-20
7-6 Summary of B Plant Major Liquid Effluent Discharge ..... 7-25
7-7 Summary of B Plant Liquid Effluent Data ..... 7-25
7-8 Sources Contributing to the B Plant Chemical Sewer Effluent ..... 7-43
8-1 DOE Occupational Dose Equivalent Limits ..... 8-13
8-2 Rockwell Occupational Dose Guidelines ..... 8-13
B-3 Portable Radiation Detection and Measurement Instruments ..... 8-20
9-1 Radiological Dose Criteria for Risk Acceptance ..... 9-10
9-2 Dose Commitment--Total Dose Equivalent Received by a Maximum Exposed Individual in the First Year Following a Credible Accident ..... 9-11

9-3 B Plant Radiation Dose for Operating Personnel ..... 9-23
9-4 Types of Injuries, 1-1-79 to 12-31-83 ..... 9-24
9-5 Parts of Body Injured, 1-1-79 to 12-31-83 ..... 9-25
9-6 Hazards Identification and Evaluation ..... 9-28
9-7 Probability of Survival ..... 9-47
9-8 Expected Estimated Survivability of Various B Plant Structures and Systems ..... 9-49
9-9 Unscheduled Electrical Outages, B Plant ..... 9-69
9-10 Vessels of Highest $^{90}Sr$ or $^{137}Cs$ Concentration and Their Hydrogen Explosion Scenario Parameters ..... 9-76
9-11 "Safe" or "Fail" Peak Shock Wave Overpressures for HEPA Filters ..... 9-80
9-12 Maximum Individual Dose Commitments from Strontium Contamination of 207-B Retention Basin ..... 9-117
9-13 Maximum Individual Dose Commitments from Cesium Contamination of 207-B Retention Basin ..... 9-117
11-1 Vessel Dilution Air Rates for Vessels Where Air is Introduced Below the Solution Level ..... 11-5
11-2 Vessel Dilution Air Rates for Vessels Where Air is Introduced Above the Solution Level ..... 11-5
11-3 Safety Limits and Limiting Condition for Operation for MCi Content of Tanks ..... 11-11
11-4 Safety Limits and Limiting Condition for Operation for Vessel Volumetric Limits ..... 11-14
12-1 Quality Requirements Control ..... 12-3

APPENDIX:
A. Chemical Evaluation Checklist ..... A-1

This Page Intentionally Left Blank.

9 3 1 2 8 9 9 1 7 5 3

# 1.0 INTRODUCTION AND GENERAL DESCRIPTION OF B PLANT

## 1.1 INTRODUCTION

A primary waste management goal for high-level radioactive waste from nuclear fuel reprocessing is the removal and long-term isolation of this waste from the biosphere. This program includes removal of the long-lived radionuclides, $^{90}Sr$ and $^{137}Cs$, from liquid radioactive wastes. Fractionation, concentration, and bulk storage of these isotopes are performed in the Waste Fractionation Facility (B Plant). These individual strontium and cesium solutions are further processed in the Waste Encapsulation and Storage Facility.

The Hanford Site is a Department of Energy reservation located in south-central Washington State (Fig. 1-1). B Plant is located in Hanford's 200-E Area, and is designated Building 221-B (Fig. 1-2 and 1-3). B Plant's mission is the separation of strontium and cesium, individually, from the fission product waste stream following plutonium and uranium recovery from irradiated reactor fuels in PUREX. The individual strontium and cesium solutions are then transferred to the Waste Encapsulation and Storage Facility (WESF) for conversion to solid compounds, encapsulation, and interim storage. After strontium and cesium removal, the remaining fission product stream is transferred from B Plant to the tank farms.

## 1.2 GENERAL FACILITY DESCRIPTION

The 200-E Area contains B Plant, WESF, PUREX, three tank farm complexes, facilities for liquid and solid waste disposal, office buildings, the power plant, laboratories, shops, and the main administration building for Rockwell Hanford Operations (Rockwell). The Plant shares its local site with the WESF complex; a retired facility (Building 224-B), and an office building (222-B) (Fig. 1-4).

The B Plant complex contains five principal structures as follows:

- Building 221-B contains all processing equipment. All waste fractionation processing is done here, as well as short-term storage of radioactive material before transfer to WESF, tank farms, or waste disposal

- Building 271-B Annex contains offices, shops, and tanks for chemical makeup solutions

- Building 211-B contains bulk storage for liquid chemicals used for processing

- Building 212-B Cask Station is a facility equipped for shipping liquid radioactive product and receiving wastes in special casks designed for overland shipment

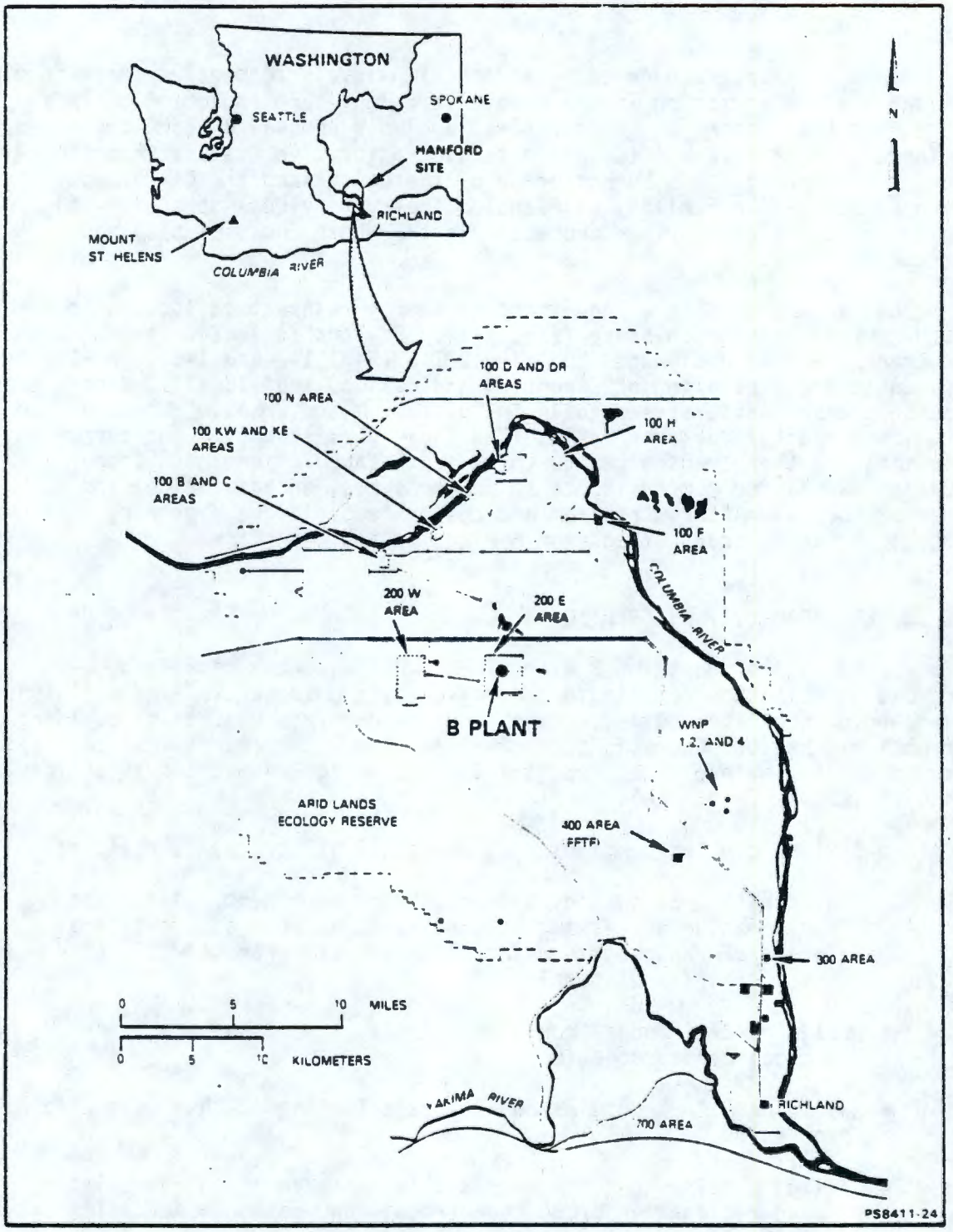


FIGURE 1-1. Hanford Site.



9 3 1 2 8 9 9 1 7 5 5

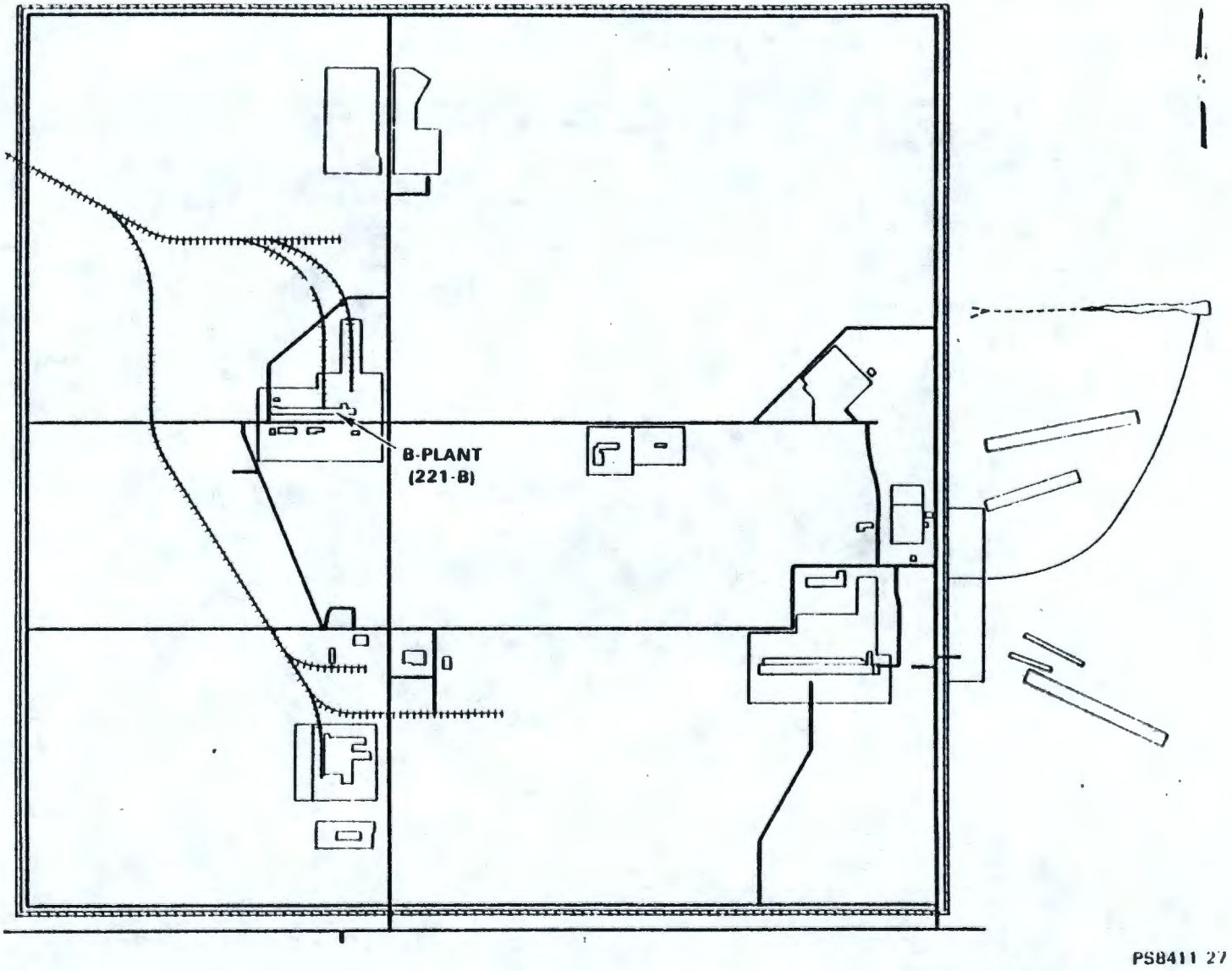


FIGURE 1-2. B Plant and WESF Facilities.

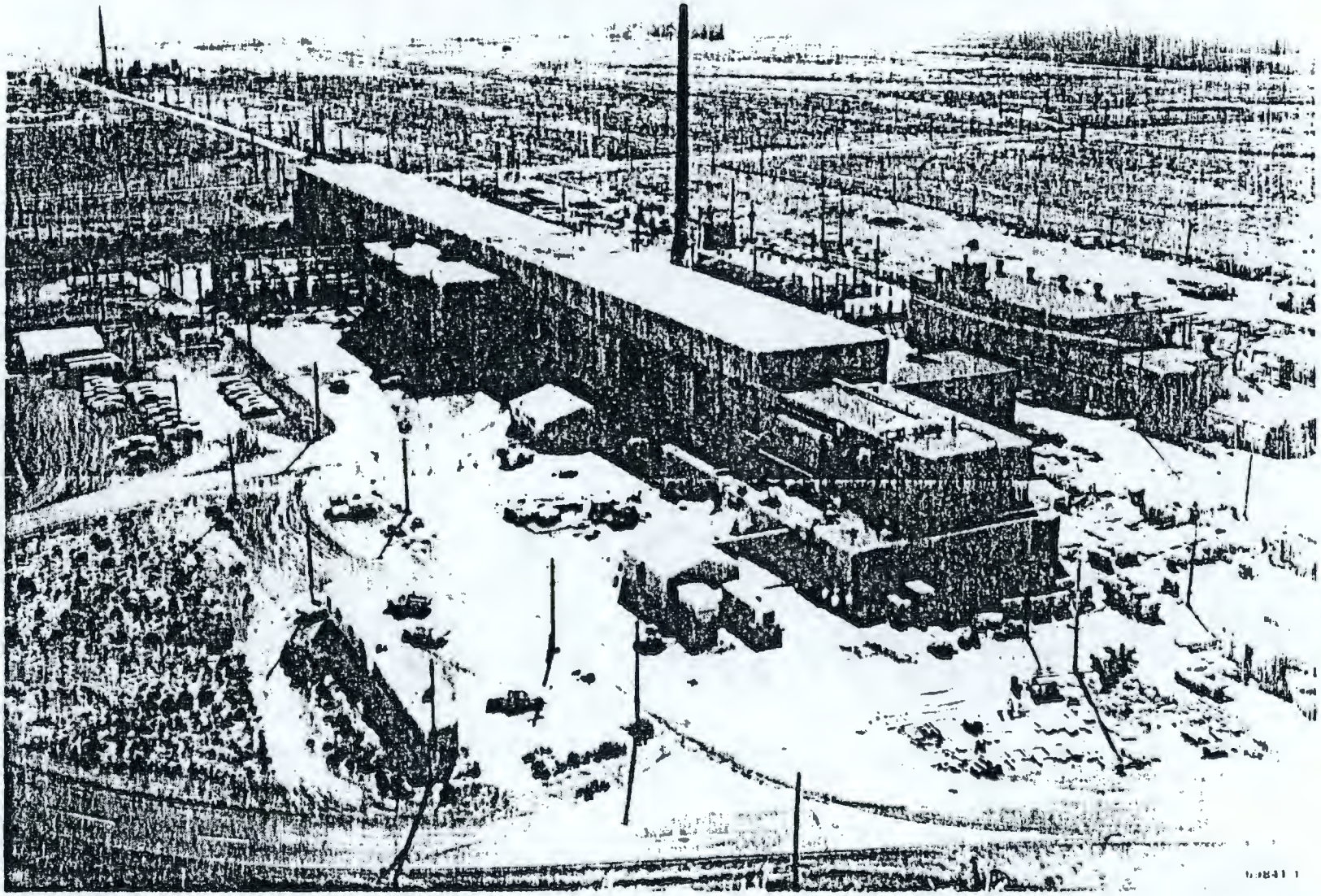

FIGURE 1-3. B Plant with WESF Attached in Foreground.

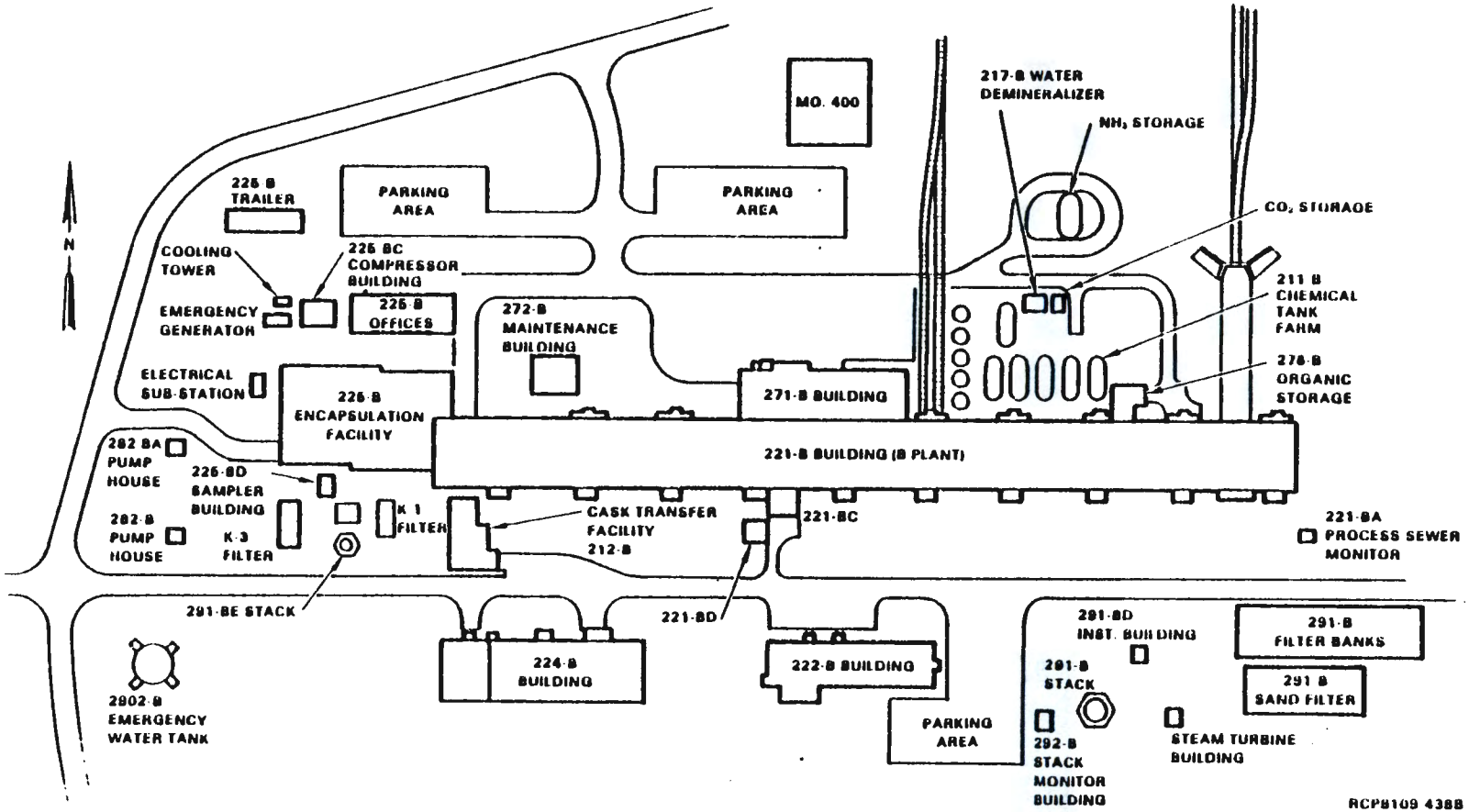


FIGURE 1-4. Physical Relationship of Principal Structures to B Plant.

- Building 291-B Ventilation Exhaust System consists of buried air tunnels, HEPA filters, backup sand filter, exhaust fans, and a 200 ft stack.

B Plant's main and supporting structures are shown in Figure 1-3. Table 1-1 lists all B Plant structures and their functions.

### 1.2.1 Principal Design Criteria

The B Plant operation is designed to operate 24 hours/day, but is dependent on PUREX for feed stock. The facility is not designed to withstand current standard design criteria seismic loadings, but it is designed to withstand maximum wind and snow loading, missiles, and volcanic ashfall. Four kinds of functional areas are included: canyon processing, process service, process operating, and personnel service. Principal design criteria are discussed in detail in Chapter 4.

### 1.2.2 Engineered Safety Systems and Emergency Features

Active processing areas are operated remotely, and are designed to safely confine radiation sources. Ventilation flow is from areas of lower radiation and contamination levels to those of higher levels. The air is exhausted to the outside after multiple filtration. To detect release of contamination to occupied areas, continuous air monitors (CAMS) are installed throughout occupied areas in the facility. Emergency power, water, and air supplies are available. These services are discussed in Chapters 5 and 8.

### 1.2.3 Instrumentation, Control, Electrical, and Auxiliary Systems

Water, steam, and electricity are supplied to B Plant. These systems are designed to be operated and maintained remotely when placed in high-radiation areas. Appropriate protective measures are used if low-level radioactive material, such as contaminated tools or samples, are in the process service areas. These aspects are discussed in Chapters 5 and 8.

### 1.2.4 Management Systems for B Plant--Generated Radioactive Waste

Radioactive Wastes are received from WESF; these are combined with those from B Plant and disposed of to the tank farms according to established guidelines. After processing to remove specific isotopes, liquid radioactive wastes are sent to the tank farm. Process area solid radioactive waste is properly drummed and sent to the appropriate, managed, burial ground. Waste Management is discussed in Chapter 7.

TABLE 1-1. B Plant Structures and Their Functions.
(Sheet 1 of 2)

| Facility | Function |
|---|---|
| 207-B Retention Basin | Receives cooling water discharge from B Plant in |
| 211-B Chemical Tank Farm | Bulk storage area for liquid chemicals used for processing |
| 212-B Cask Transfer Facility | Receive/ship batch quantities of feed or product |
| 216-B-55 Steam Condensate Crib | Covered trench for the disposal of condensates from heating coils in process tanks |
| 216-B-59 Retention Basin | Emergency receiver of 15-in. cooling water line discharge |
| 216-B-62 Process Condensate Crib | Covered trench for the disposal of condensates from process concentrators |
| 216-B-63 Emergency Ditch | Receives chemical sewer effluent or 207-B emergency diversion |
| 216-B-64 Retention Basin | Receives condensates which exceed the environmental release guidelines |
| 217-B Water Demineralizer | Demineralized process water supply |
| 221-B Waste Fractionation Plant | Canyon facility for processing waste to isolate selected fission products |
| 221-BB Condensate Building | Provides housing for process and steam condensate receiving tanks |
| 221-BC Change House | Provides clothes-change area for personnel |
| 221-BD Laundry Shed | Provides interim storage area for all used laundry |
| 221-BF Effluent Control Building | Provides diversion capability for liquid waste stream to tank farm or retention basin |

TABLE 1-1. B Plant Structures and Their Functions.
(Sheet 2 of 2)

| Facility | Function |
|---|---|
| 222-B Office Building | Retired facility used for administrative offices |
| 224-B Retired Facility | Storage |
| 225-B Waste Encapsulation and Storage Facility (WESF) | Processing, encapsulation and interim storage of strontium and cesium |
| 241-ER-151 Diversion Boxes | Route waste and other streams to and from 221-B |
| 241-B-154 Diversion Boxes | Retired (boxes sealed and lines blanked) |
| 241-BX-154 Diversion Boxes | Retired (boxes sealed and lines blanked) |
| 271-B Support Building | Annex to 221-B containing shops, offices, and aqueous makeup facilities for waste processing |
| 272-B Electrical Shop | Provides area for electrical maintenance |
| 272-BA Maintenance Shop | Provides area for maintenance and material storage |
| 272-BB Insulation Shop | Provides area for insulation work |
| 276-B Organic Makeup and and Storage | Provides area for makeup and storage of organic solvent |
| 282-B Pump Houses | Provide pumping for emergency raw water supply |
| 282-BA Pump Houses | Provide pumping for emergency raw water supply |
| 291-B Fans, Stack and Filters | Provides ventilation and filtration for 221-B |
| 292-B Instrument Building | Provides the stack monitoring station |
| 2902-B Water Tank | Provides emergency sanitary water supply |

9 3 1 2 8 9 9 1 7 6 1

### 1.2.5 General Layout of Major Structures

This layout is shown in Figure 1-4.

### 1.2.6 Process Description

The feed materials to B Plant usually come from PUREX via the 244-AR Vault or the tank farms. Auxiliary feed materials may originate elsewhere if they are of appropriate composition to be assimilated into the B Plant feed stream.

B Plant is designed to separate strontium and cesium, individually, from high level wastes utilizing various precipitation, ion exchange, and solvent extraction processes. The resulting strontium and cesium solutions are then kept in storage for future utilization by WESF. These solutions may occasionally be shipped to the 300 Area. The simplified flow schemes are referenced in Figure 1-5. Process systems are discussed in Chapter 6.

## 1.3 SCOPE

This safety analysis addresses relevant aspects of radiation and industrial safety related to the structures, systems, and operations of B Plant (other than WESF and 212-B, which have their own respective SARs):

- Structural integrity
- Operational interfaces with B Plant
- Processing operations
- Building ventilation
- Radiation protection of personnel, public, and environment
- Operational interfaces with waste disposal.

## 1.4 LIMIT OF APPLICABILITY

This document is a report on the safety analysis of B Plant; it is assumed that current acid waste (CAW) is processed, using equipment and processes as described here, to produce feed for WESF. This safety analysis has been conducted in compliance with DOE Orders 5480.1A and 5481.1A and DOE-RL Orders 5480.1 and 5481.1. Any future significant changes in the B Plant facility configuration, processes, or operating parameters will be evaluated and documented appropriately as possible revisions or addenda to this document.

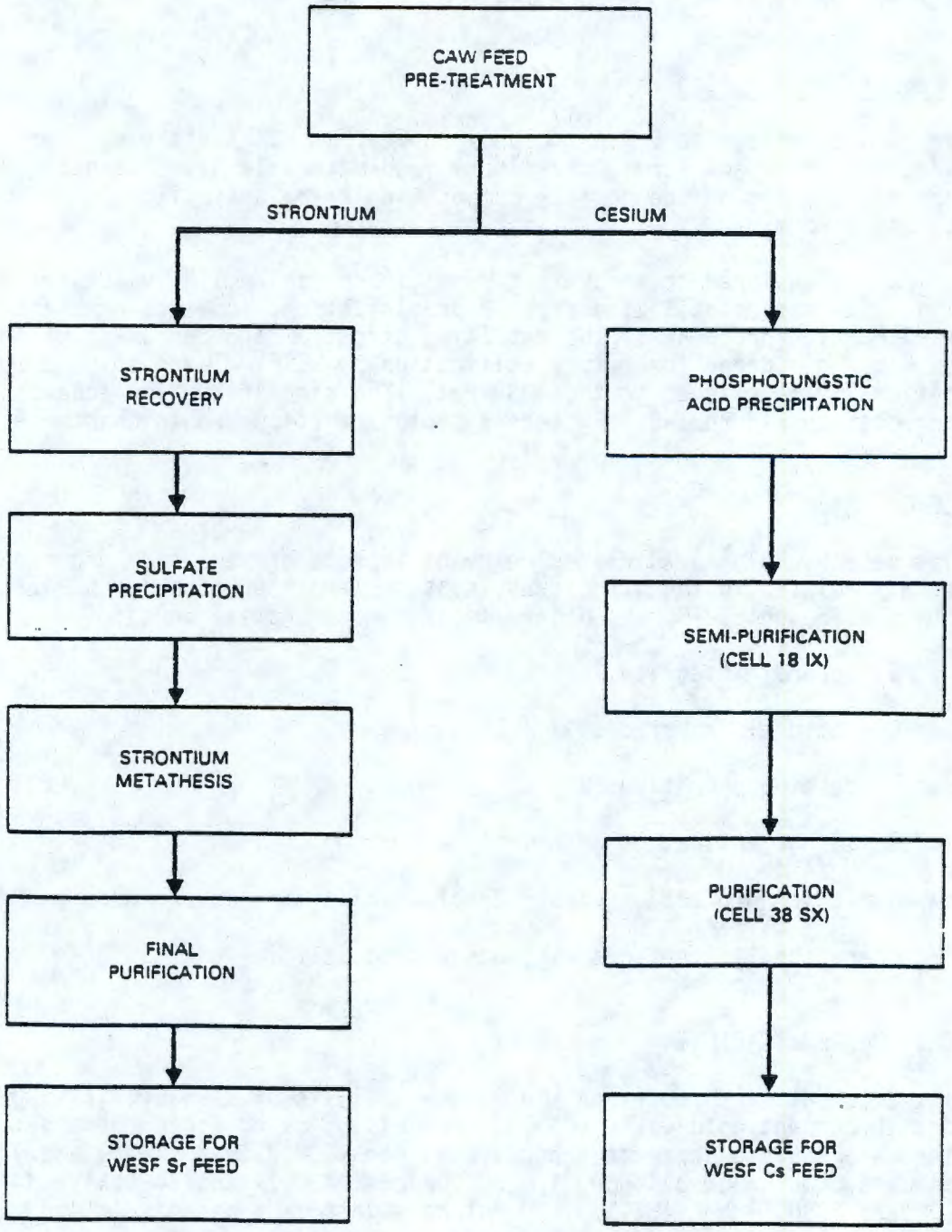


FIGURE 1-5. Simplified Current Acid Waste Processing Flow.

# 2.0 SUMMARY SAFETY ANALYSIS

The impacts of natural phenomena and those of normal and accident conditions during the operation of B Plant for current acid waste (CAW) processing have been reviewed, analyzed, and evaluated. This evaluation concludes that normal operations for CAW processing in B Plant are conducted without undue risk to the health and safety of employees, the general public, or the environment.

## 2.1 RADIOLOGICAL IMPACT OF NORMAL OPERATIONS

The primary radionuclides handled in B Plant are $^{90}Sr$ and $^{137}Cs$ in solution and as various precipitated solids. Other radionuclides are considered to be very minor by comparison to $^{90}Sr$ and $^{137}Cs$. The strontium and cesium, as well as the other radionuclides, are received in B Plant as CAW from the PUREX operation. This waste is processed to isolate, purify, concentrate, and store, as solution, the strontium and the cesium in B Plant.

Radioactive liquid wastes are combined with those from WESF, processed as required, and disposed of to the appropriate crib, pond, ditch, or underground storage. Radioactive solid waste is packaged, handled, stored, and disposed of in accordance with established procedures (Ref. 2-1).

Exhaust air from the cell void areas, 212-B Cask Facility, the canyon, and 224-B is filtered through two or three stages of high-efficiency particulate air (HEPA) filters, and is continuously sampled and monitored to ensure that radioactive releases are below established concentration requirements (Ref. 2-2). Exhaust air from non-ammonia-containing vessels is filtered through two stages of HEPA filters before feeding into the canyon-exhaust air stream, where it receives two additional stages of HEPA filtration, as indicated above. Exhaust air from ammonia-containing vessels is filtered through four stages of HEPA filtration before it is exhausted to the 24 in. sewer. Exhaust air from the operating, electrical, and pipe galleries (non-contaminated areas) is exhausted through the men's change room, laundry room, storage room, and pipe gallery (also non-contaminated areas) to the atmosphere via HEPA filters.

Radionuclides in ambient air are sampled by a network of 22 continuous air samplers in the 200 Areas and vicinity. During 1982, these radionuclides were well below Table II concentration guides. The offsite radiation dose to the maximum individual from the entire Hanford Site during 1982 has been estimated at 0.5 mrem/yr. The incremental contribution to this offsite radiation dose resulting from operations at B Plant was an insignificant fraction of this total (Ref. 2-3).

## 2.2 RADIOLOGICAL IMPACT OF NATURAL EVENTS

B Plant was constructed in 1943, and was not subject to present design basis criteria for withstanding natural-forces events (Ref. 2-4). Several structural analyses have been conducted on various portions of the B Plant facility, but none has been comprehensive or quantitatively conclusive. It is estimated from these studies that B Plant will probably withstand a 0.125 g earthquake [1/2 safe shutdown earthquake (SSE)] sufficiently to preclude undue consequences to the general public.

B Plant is served by dual overhead power lines from a single substation, but does not have backup power generation, except for operating the exhaust fan on the canyon exhaust system, in case of primary power loss. The primary ventilation/filtration system may thereby not be operable during power loss, and such loss might lead to undesirable consequences if B Plant is not made operable in sufficient time.

Loss of electrical power for an extended period of time or a seismic event could cause any or all of the "worst case" accidents described in detail in Chapter 9. These accidents are summarized in the following section.

## 2.3 RADIOLOGICAL IMPACT FROM ACCIDENTS AND ABNORMAL OPERATIONS

Postulated accidents, not containable by the plant, which could result in loss of confinement, personnel contamination, personnel exposure, or industrial injuries have been analyzed. First year dose commitments and risks of these accidents can be seen in Table 2-1. For the "seismic" scenario, accident probability is the one-half SSE probability. For all the remaining scenarios, accident probabilities are operational probabilities. Every radiological accident is one of low hazard with acceptable risk (Ref. 2-5).

### 2.3.1 Natural Forces Considerations

A seismic event can be the initiating cause of several accidents, but unavailability of detailed seismic information precludes a quantitative assessment of the seismic-caused likelihood of these events relative to each other. It appears that B Plant has an overall survival probability of about 50 to 75% for a 1/2 SSE (0.125 g). The chemical storage tank farm and the stack monitoring system are assumed to have a lower survival expectancy. Hazard analysis in Chapter 9.0 concludes that the accident is rated low hazard.



9 3 1 2 8 9 9 1 7 6 5

TABLE 2-1. First-Year Commitments and Risks (worst case) to Onsite/Offsite Individuals (Accidents Affecting B Plant). (Sheet 1 of 2)

| Accident | Release to atmosphere (Ci) | Frequency ($yr^{-1}$) | Bone dose (rem/yr) | | | Risk (rem/yr) | | |
|---|---|---|---|---|---|---|---|---|
| | | | Maximum individual onsite | Max. individual offsite | | Maximum individual onsite | Max. individual offsite | |
| | | | | Hwy. 240 | Ringold farmer | | Hwy. 240 | Ringold farmer |
| 1. Seismic event | 335 Ci $^{90}Sr$<br>1.4 Ci $^{137}Cs$ | $3.3 \times 10^{-3}$ | 4.1 | 1.4 | 1.3 | $1.4 \times 10^{-2}$ | $4.6 \times 10^{-3}$ | $4.3 \times 10^{-3}$ |
| 2. Loss of electrical power | See individual accident | $4.9 \times 10^{-2}$ | See individual accidents for specific data | | | | | |
| 3. In-tank hydrogen explosion | $6.3 \times 10^{-5}$ | $2.3 \times 10^{-7}$ | <15 | <3 | <3 | $<3.5 \times 10^{-7}$ | $<6.9 \times 10^{-7}$ | $<6.9 \times 10^{-7}$ |
| 4. Full-cell hydrogen explosion | $3.2 \times 10^{-2}$ | $9.2 \times 10^{-16}$ | $1.3 \times 10^{-3}$ | $2.5 \times 10^{-4}$ | $2.2 \times 10^{-4}$ | $1.2 \times 10^{-18}$ | $2.3 \times 10^{-19}$ | $2.0 \times 10^{-19}$ |
| 5. In-tank ammonia explosion | $3.0 \times 10^{-6}$ | $5.3 \times 10^{-7}$ | <15 | <3 | <3 | $<8.0 \times 10^{-6}$ | $<1.6 \times 10^{-6}$ | $<1.6 \times 10^{-6}$ |
| 6. Full-cell ammonia explosion | $1.1 \times 10^{-3}$ | $9.2 \times 10^{-12}$ | <15 | <3 | <3 | $<1.4 \times 10^{-10}$ | $<2.8 \times 10^{-11}$ | $<2.8 \times 10^{-11}$ |
| 7. Fire | 35.2 $^{90}Sr$<br>35.1 $^{137}Cs$ | $3.0 \times 10^{-6}$ | $1.5 \times 10^{0}$ | $2.9 \times 10^{-1}$ | $2.9 \times 10^{-1}$ | $4.5 \times 10^{-6}$ | $8.7 \times 10^{-7}$ | $8.7 \times 10^{-7}$ |
| 8. Vessel coil failure | $4.6 \times 10^{-4}$ Sr<br>$1.7 \times 10^{-3}$ Cs | $5.4 \times 10^{-9}$ | $5.8 \times 10^{-4}$ | $1.1 \times 10^{-5}$ | $9.5 \times 10^{-6}$ | $3.1 \times 10^{-12}$ | $5.9 \times 10^{-14}$ | $5.1 \times 10^{-14}$ |
| 9. Loss of cooling water | $5.0 \times 10^{-4}$ Sr<br>$1.0 \times 10^{-14}$ Cs | $2.6 \times 10^{-8}$ | NIL | NIL | NIL | NIL | NIL | NIL |

TABLE 2-1. First Year Commitments and Risks (worst case) to Onsite/Offsite Individuals (Accidents Affecting B Plant). (Sheet 2 of 2)

| Accident | Release to atmosphere (Ci) | Frequency ($yr^{-1}$) | Bone dose (rem/yr) | | | Risk (rem/yr) | | |
|---|---|---|---|---|---|---|---|---|
| | | | Maximum individual onsite | Max. individual offsite | | Maximum individual onsite | Max. individual offsite | |
| | | | | Hwy. 240 | Ringold farmer | | Hwy. 240 | Ringold farmer |
| 10. Loss of compressed air | NIL | $2.6 \times 10^{-4}$ | NIL | NIL | NIL | NIL | NIL | NIL |
| 11. Temperature excursion | $1.1 \times 10^{-10}$ Mixed Fission Products | $1.9 \times 10^{-3}$ | NIL | NIL | NIL | NIL | NIL | NIL |
| 12. Cell drain line failure | NIL | $3.5 \times 10^{-4}$ | NIL | NIL | NIL | NIL | NIL | NIL |
| 13. Nitric acid misrouted to IX column | NIL | $1.0 \times 10^{0}$ | NIL | NIL | NIL | NIL | NIL | NIL |

### 2.3.2 Total Loss of Electrical Power

Total loss of electrical power will effectively remove all processing and ventilation capability at B Plant, except as provided by the automatically started steam-turbine-driven exhaust fans upon power failure, but it is expected that all processing can be safely terminated. Approved emergency plans will be implemented. No undue effects on operations personnel are directly attributable to total power loss, per se. The longer the power loss, the greater can be expected the quantity and magnitude of secondary effects. Duration of loss can also affect environmental releases after restart, depending on internal releases in the meantime. For risk of loss-of-power-initiated accidents, refer to Table 2-1.

### 2.3.3 Hydrogen or Ammonia Accumulation and Explosion

Hydrogen or ammonia can accumulate and explode in the air space of a cell or in the air space of a partially filled processing vessel. Of these four possibilities, the most serious to offsite people is that of a full-cell hydrogen explosion. Doses and risks are those summarized in Table 2-1.

2.3.3.1 In-Tank Hydrogen Explosion. "Worst case" atmospheric releases are 63.0 $\mu$Ci $^{90}$Sr or 63.0 $\mu$Ci $^{137}$Cs. These values do not result in exceeding Table II guidelines (Ref. 2-2) and the risk is considered to be acceptable (Ref. 2-5). See Table 2-1.

2.3.3.2 Full-Cell Hydrogen Explosion. "Worst case" atmospheric releases are $3.2 \times 10^4$ $\mu$Ci $^{90}$Sr or $2.3 \times 10^4$ $\mu$Ci $^{137}$Cs. These activity levels exceed Table II (Ref. 2-2) guidelines, but resulting dose commitments to "maximum individuals" classify this scenario as low hazard with acceptable risk (Ref. 2-5). Refer to Table 2-1 for numerical values.

2.3.3.3 In-Tank Ammonia Explosion. "Worst case" atmospheric release is $3.0 \times 10^{-6}$ Ci $^{137}$Cs. This value does not result in exceeding Table II guidelines (Ref. 2-1), and the risk is considered to be acceptable (Ref. 2-5). Refer to Table 2-1 for numerical values.

2.3.3.4 Full-Cell Ammonia Explosion. "Worst case" atmospheric release is $1.1 \times 10^{-3}$ Ci $^{137}$Cs. This value results in exceeding Table II guidelines (Ref. 2-2), but this scenario is classed as low hazard, and the risk is considered to be acceptable (Ref. 2-5). Refer to Table 2-1 for numerical values.

### 2.3.4 Fire

This scenario describes a fire occurring as a result of dropping a cover block into Cell 27, spontaneously rupturing a tank containing organic liquid with complexed $^{90}Sr$. The resulting fire is treated in two respects:
(1) with only smoke and particulate matter impacting the HEPA filters, and
(2) with flaming debris igniting the HEPA filters.

2.3.4.1 High-Efficiency Particulate Air Impact from Smoke and Particulates. Atmospheric release from this scenario is 1.55 Ci $^{90}Sr$ and 1.55 Ci $^{137}Cs$, which results in Table II guidelines (Ref. 2-2) being exceeded. However, "maximum individual" dose commitments indicate a low hazard classification and acceptable risk (Ref. 2-5). Refer to Table 2-1 for numerical values.

2.3.4.2 High-Efficiency Particulate Air Impact from Flaming Debris. Atmospheric release from this scenario is 35.2 Ci $^{90}Sr$ and 35.1 Ci $^{137}Cs$, which results in Table II guidelines (Ref. 2-2) being exceeded. However, "maximum individual" dose commitments indicate a low hazard classification and acceptable risk (Ref. 2-5). Refer to Table 2-1 for numerical values.

### 2.3.5 Vessel Coil Failure

This scenario describes failure of a vessel heating/cooling coil/bundle and potential resulting consequences. "Worst case" results in "maximum individual" first-year bone-dose commitment from $^{90}Sr$ of $3.1 \times 10^{-12}$ rem. The dose commitments classify this scenario as low hazard with acceptable risk (Ref. 2-5). Refer to Table 2-1 for numerical values.

### 2.3.6 Loss of Cooling Water

Many B Plant processes require cooling water. This scenario describes consequences resulting from its loss. "Worst case" consequences result in release to the atmosphere of $5 \times 10^{-4}$ Ci of $^{90}Sr$ and $1.0 \times 10^{-14}$ Ci of $^{137}Cs$. These quantities are well below Table II guidelines (Ref. 2-2), resulting in a low hazard classification with acceptable risk (Ref. 2-5). Refer to Table 2-1.

### 2.3.7 Loss of Instrument or Process Compressed Air

Compressed air is necessary in B Plant for various instrument operations and controls, as well as various processing applications. This scenario describes the effects from loss of compressed air in B Plant. There is no effect to onsite/offsite personnel, because such a loss does not directly affect the confinement system. This scenario, therefore, is described as low hazard with acceptable risk (Ref. 2-5). Refer to Table 2-1.



9 3 1 2 8 9 1 7 6 9

### 2.3.8 Temperature Excursion

This scenario describes effects from centrifuged solids being permitted to dry out for several hours. Activities released to the atmosphere are as follows:

| Species | Activity (Ci) |
|---|---|
| $^{239}Pu$ | $2.0 \times 10^{-16}$ |
| $^{241}Am$ | $9.0 \times 10^{-15}$ |
| $^{238}U$ | $8.0 \times 10^{-22}$ |
| $^{237}Np$ | $2.0 \times 10^{-18}$ |
| $^{90}Sr$ | $2.0 \times 10^{-32}$ |
| $^{141,144}Ce$ | $1.0 \times 10^{-11}$ |
| $^{103,106}Ru$ | $1.0 \times 10^{-10}$ |

These values do not result in exceeding Table II guidelines (Ref. 2-2). This scenario is thereby classified as low hazard with acceptable risk (Ref. 2-5). Refer to Table 2-1.

### 2.3.9 Cell Drain Line Failure

This scenario describes the effects of leakage of a sizeable quantity of $^{90}Sr$ solution into the soil beneath the B Plant facility. The accident results in a release to the soil $1.2 \times 10^6$ Ci of $^{90}Sr$ in solution. Dose commitments to "maximum individuals" are significantly below background levels, resulting in no effect to such individuals. Undue environmental effects are not expected because of the depth of the water table and the fact that the strontium becomes trapped in the soil. This scenario is, therefore, classified as low hazard with acceptable risk (Ref. 2-5). Refer to Table 2-1.

### 2.3.10 Nitric Acid Misrouted to Ion Exchange Column

Nitric acid can react unfavorably with ion exchange resin if various physical factors are not adequately controlled. This scenario describes the effects if nitric acid is accidentally routed to the cesium ion exchange column. No onsite/offsite personnel effects are expected beyond normal operating parameters. Risk is determined to be no higher than that experienced in normal operations, and is therefore acceptable (Ref. 2-5). Refer to Table 2-1.

## 2.4 NON-RADIOLOGICAL IMPACT FROM ACCIDENTS AND ABNORMAL OPERATIONS

Only one non-radiological accident has been analyzed which is not containable by the plant and which has potential offsite consequences in excess of accepted guidelines. This accident is the collapse of the liquid ammonia bulk storage tank. Air concentration at the site boundary can

exceed the Time Weighted Average (TWA) value of 500 ppm (25 to 800 ppm), but are expected to be below the TWA. With an accident probability of $1.0 \times 10^{-5}$/yr, this accident has been assessed as moderate hazard with acceptable risk (Ref. 2-5).

## 2.5 REFERENCES

2-1. RHO-MA-222, Rev. 1, July 1983, Hanford Radioactive Solid Waste Packaging, Storage and Disposal Requirements, Rockwell Hanford Operations, Richland, Washington.

2-2. RHO-MA-139, January 1983, Environmental Protection Manual, Rockwell Hanford Operations, Richland, Washington.

2-3. RHO-HS-SR-82-2 (4Q GAS P), Radioactivity in Gaseous Waste Discharge from the Separations Facilities During 1982, R. C. Aldrich and G. C. Sliger, Rockwell Hanford Operations, Richland, Washington.

2-4. SDC 4.1, Rev. 8, January 30, 1984, Hanford Plant Standards Arch-Civil Design Criteria, Design Loads for Facilities, Rockwell Hanford Operations, Richland, Washington.

2-5. RHO-HS-MA-1, Rev. 1, January 1984, Safety Analysis and Report Preparation Guide, G. M. Christensen and R. Jacobs, Rockwell Hanford Operations, Richland, Washington.

# 3.0 SITE CHARACTERISTICS

## 3.1 GENERAL

The information presented in this site description is a summary of data pertinent to the 200 Areas, site of the Fission Products Processing Facility (B Plant).

In 1943, the United States Government obtained land in south-central Washington State for siting nuclear plant facilities (Hanford Reservation). Near the center of the reservation on an upland plateau 20 mi from the nearest city (Richland) and 10 mi from the nearest inhabited agricultural area, a site (known as the 200 Areas) was selected for construction of a radiochemical separations complex. Since the inception of the Hanford Operations, exhaustive investigation and analysis of the environment at the site has been performed and documented.

## 3.2 GEOGRAPHY AND DEMOGRAPHY OF SITE

### 3.2.1 Site Location

B Plant is located within the U.S. Department of Energy (DOE) Hanford Site, a 570-$mi^2$ area; access to this area is controlled for reasons of national security and health and safety considerations. The site is located in the State of Washington, as shown in Figure 3-1. B Plant is located within a fenced area of the 2,000-acre 200 East Area, near the center of the Hanford Site. Figures 3-2 and 3-3 are maps of the Hanford Site and 200 East Area, respectively.

### 3.2.2 Site Description

B Plant is located on a terrace, locally referred to as the "200 Areas Plateau," near the center of the Hanford Site. The Plant is within the 200 East Area, which is bounded by a security fence to limit general access. Traffic routes are shown in Figure 3-2. State Highway 240, for general public use, passes within 5 mi of B Plant.

All activities conducted within the Hanford Site are controlled by DOE through various contractors, the U.S. Nuclear Regulatory Commission (NRC), or by lease arrangements. B Plant is operated by Rockwell Hanford Operations (Rockwell). The Hanford Site (controlled area) boundaries and the distances from B Plant to the Hanford Site boundary are shown in Figure 3-2. Activities near the 200 Areas are further controlled within a "200 Areas controlled zone."

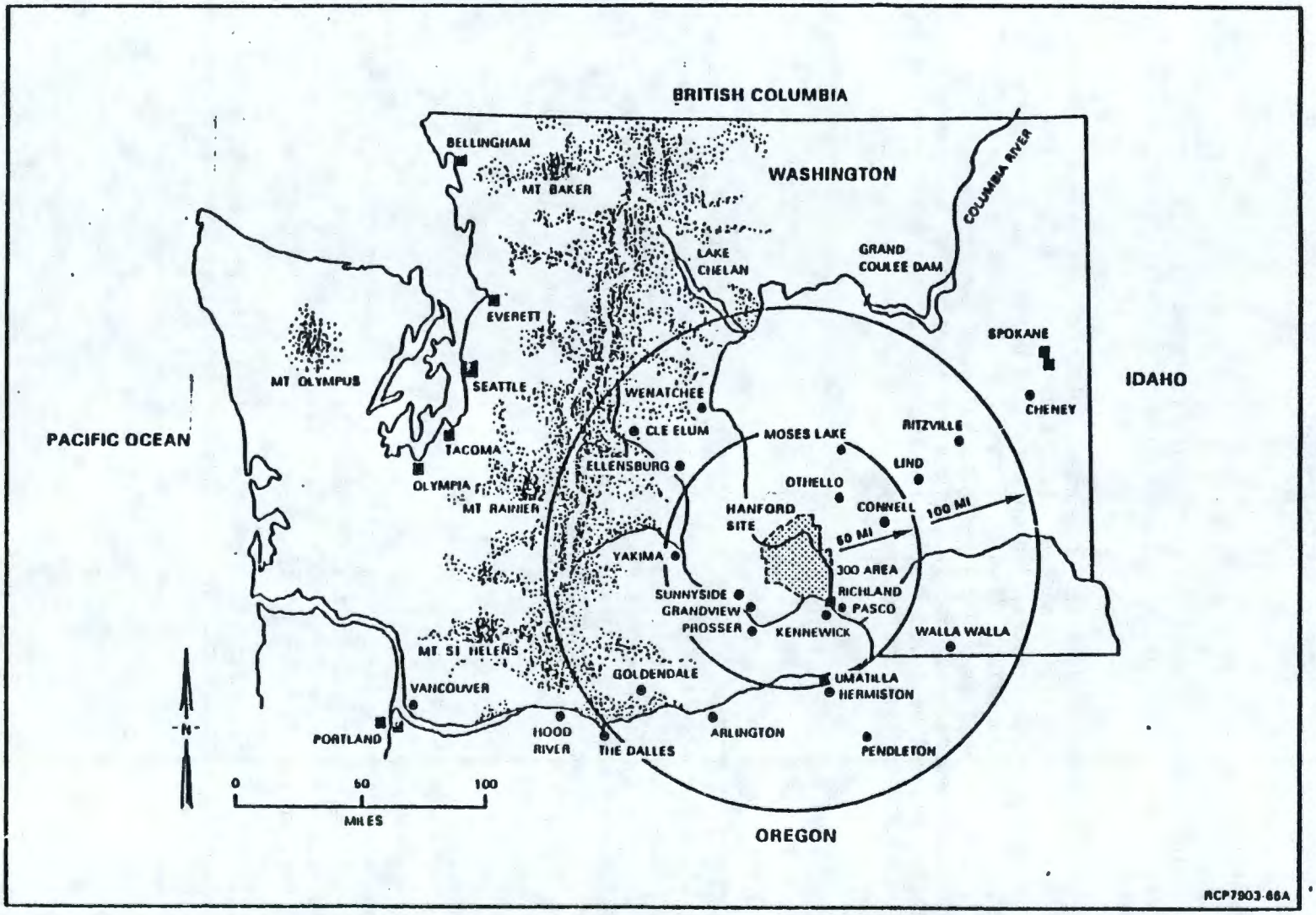


FIGURE 3-1. Location of Hanford Site in Washington State.

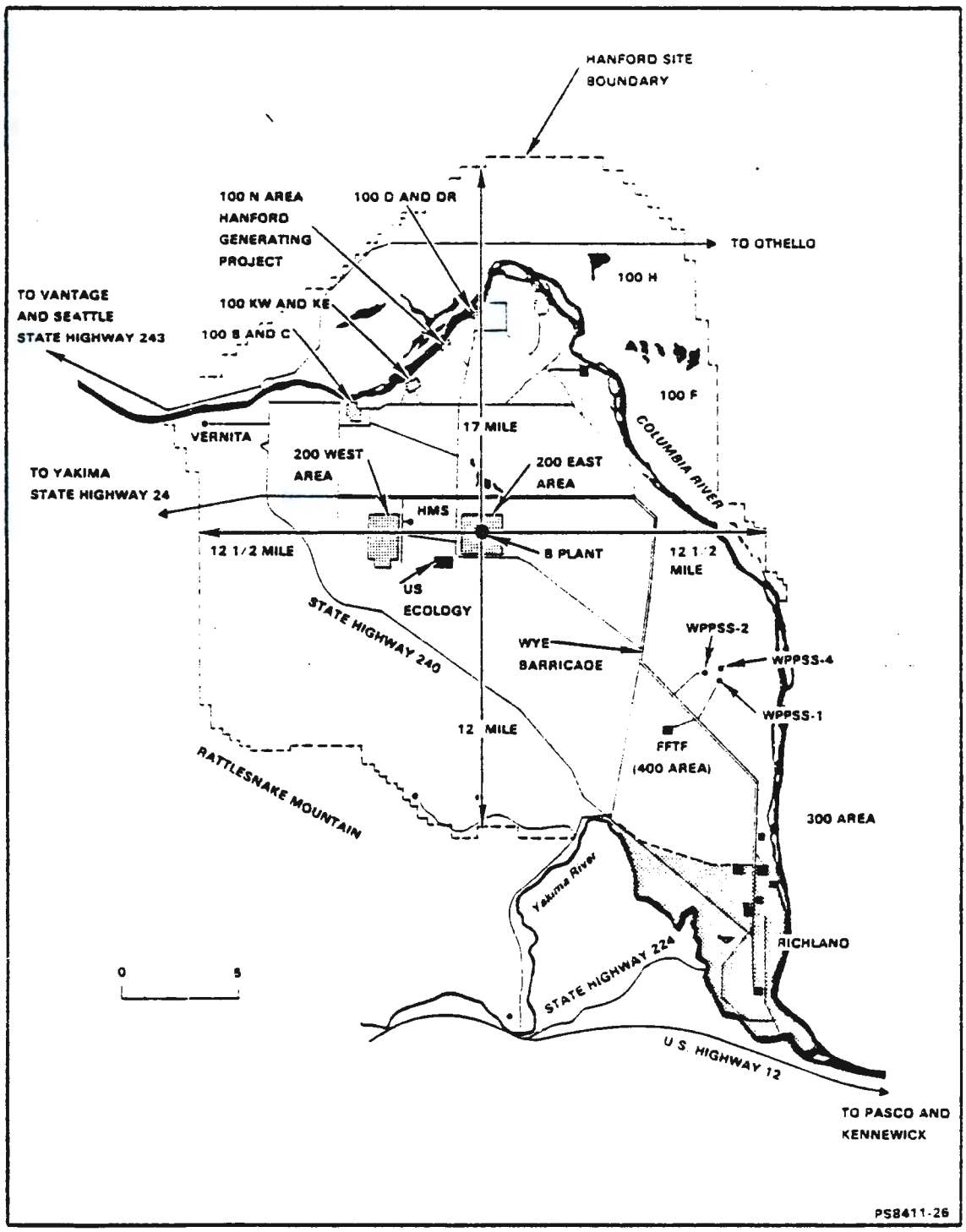


FIGURE 3-2. Hanford Site Map.

This page intentionally left blank.

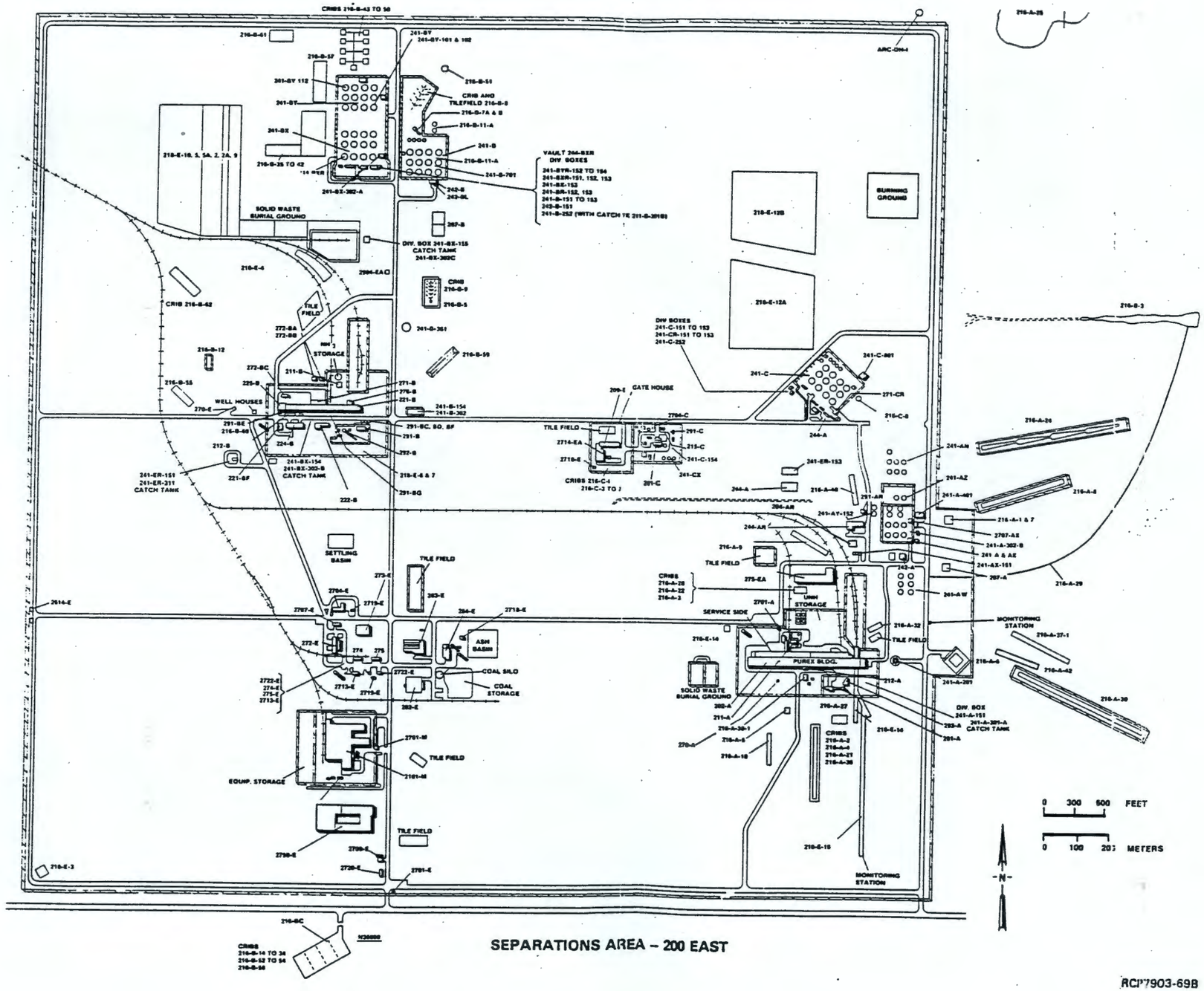


SEPARATIONS AREA – 200 EAST

RCP7903-698

FIGURE 3-3. Detailed Map of the 200 East Area.



9312891776

THIS PAGE INTENTIONALLY
LEFT BLANK

THIS PAGE LEFT BLANK INTENTIONALLY.

9128917777

The vegetation of the Hanford Site consists of eight major kinds of shrub-steppe communities identified by the following conspicuous or most abundant plant species (Ref. 3-1):

- Sagebrush/bluebunch wheatgrass
- Sagebrush/cheatgrass or sagebrush/Sandberg's bluegrass
- Sagebrush-bitterbrush/cheatgrass
- Greasewood/cheatgrass-saltgrass
- Winterfat/Sandberg's bluegrass
- Thyme buckwheat/Sandberg's bluegrass
- Cheatgrass-tumble mustard
- Willow.

### 3.2.3 Population Distribution and Trends

The 1970 population living within a 50-mi radius of the Hanford Meteorological Station (HMS) was 246,000 (Ref. 3-1). The 1980 population was about 341,000 (Ref. 3-2). (The HMS is used as the population reference point for B Plant because of the availability of data and its proximity, approximately 3 mi west of the plant.) The distribution of communities within a 50-mi radius centered on the HMS are shown in Figure 3-4. Population estimates were made through the year 1990 (Ref. 3-2) based upon 1980 census information, current birth rate trends, and estimates of net migration into or out of the state, as economic and employment opportunities change over the forecast period. Figures were updated by allocating increased population on a proportional basis to sectors in the Tri-Cities Area (Richland, Kennewick, and Pasco), where the most rapid growth has occurred. It is assumed that the Hanford Site will remain under the control of DOE and that no persons will reside within the site boundaries. The population residing in the unincorporated areas was calculated on the basis of uniform population density in the portion of a specific census district which lies within the area. This assumes an even distribution of population throughout the unincorporated areas of each census district. It is further assumed that the rate of population growth will be the same for both incorporated and unincorporated areas on a county-by-county projection (Ref. 3-2). The distribution of population within a 50-mi radius of the HMS for the year 1981 is shown in Figure 3-5 while the projection for year 1990 is shown in Figure 3-6.



9 3 1 2 8 9 9 1 7 7 8

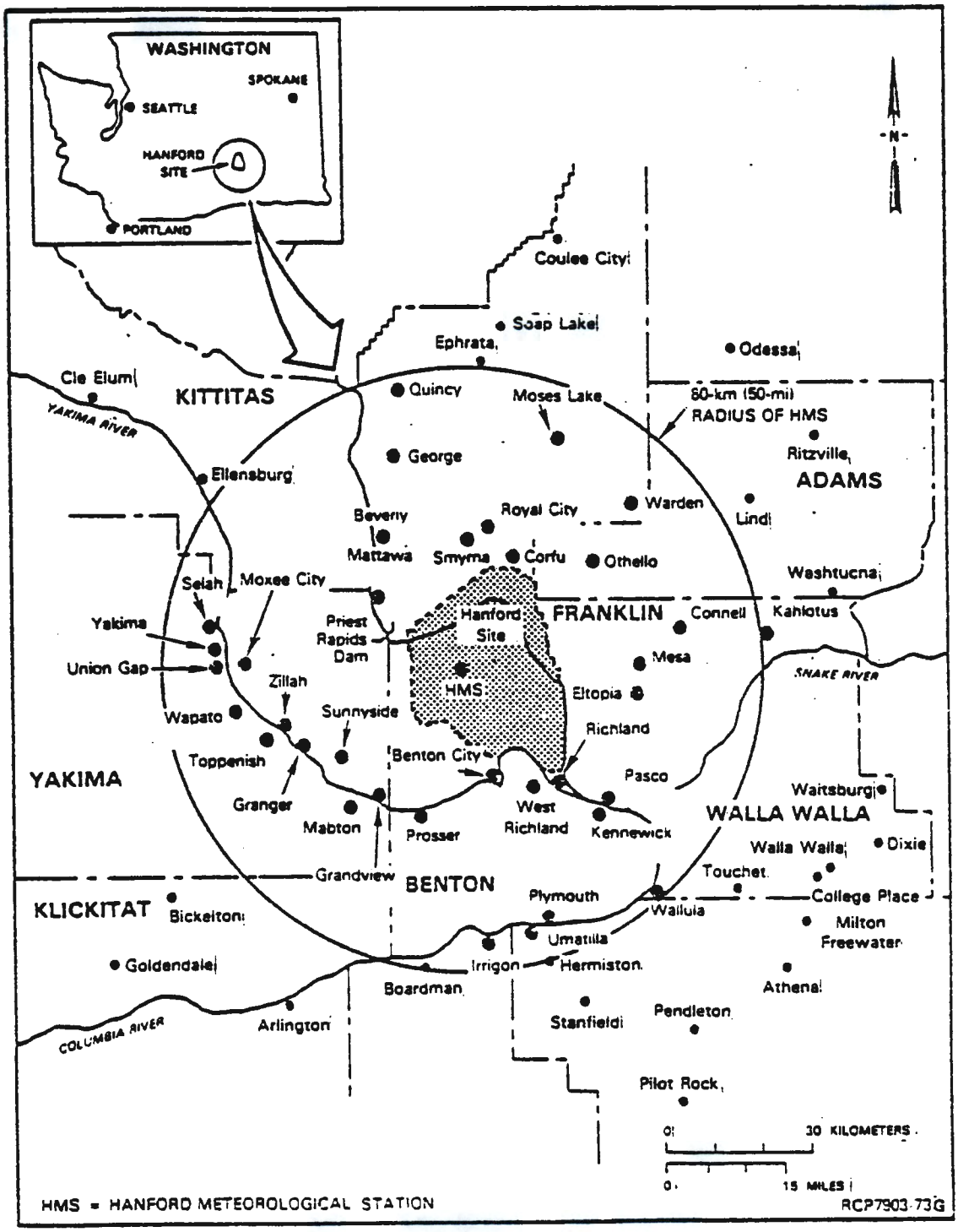


FIGURE 3-4. Communities in the Hanford Site Vicinity.

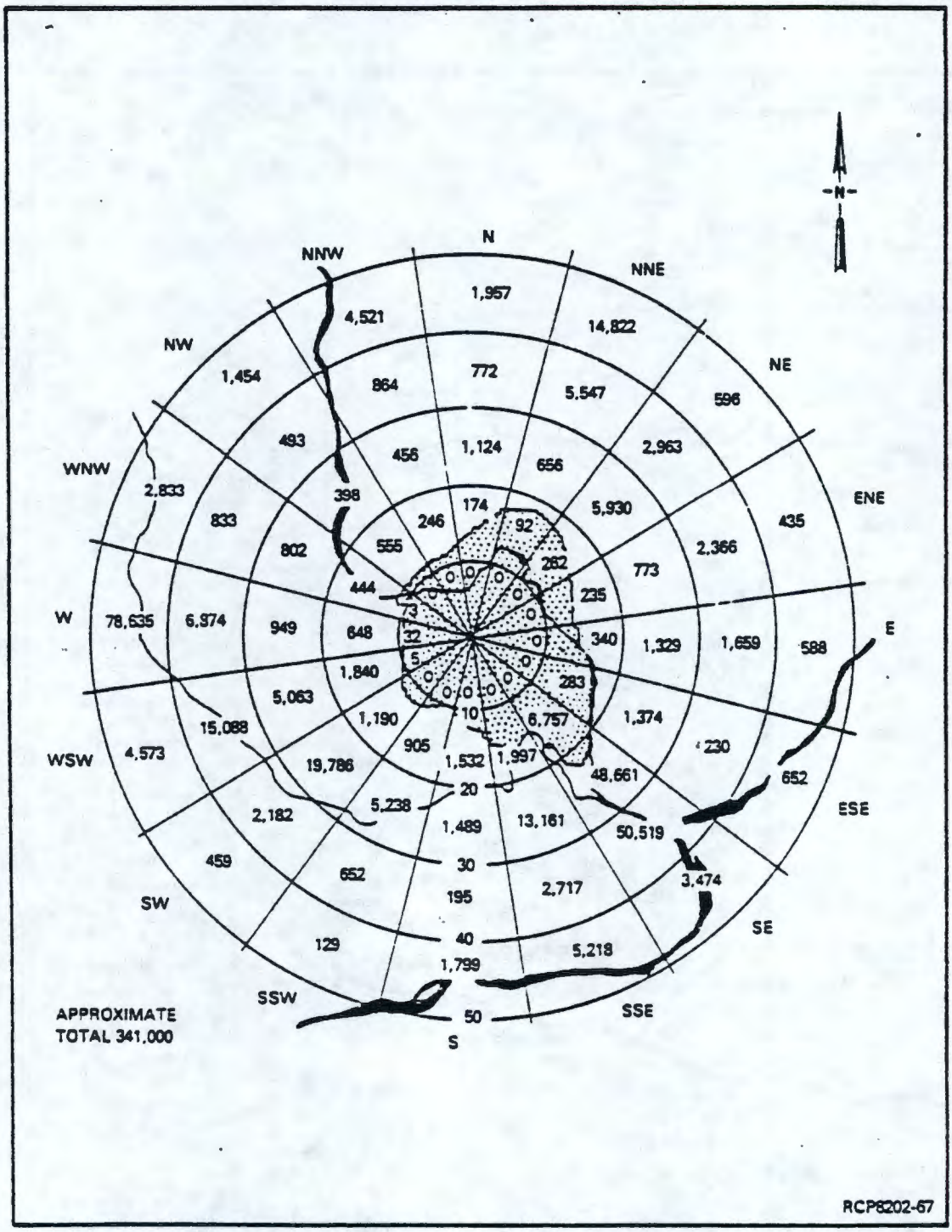


FIGURE 3-5. Estimated Geographic Distribution of the 1981 Population Within a 50-Mile Radius of the Hanford Meteorological Station.

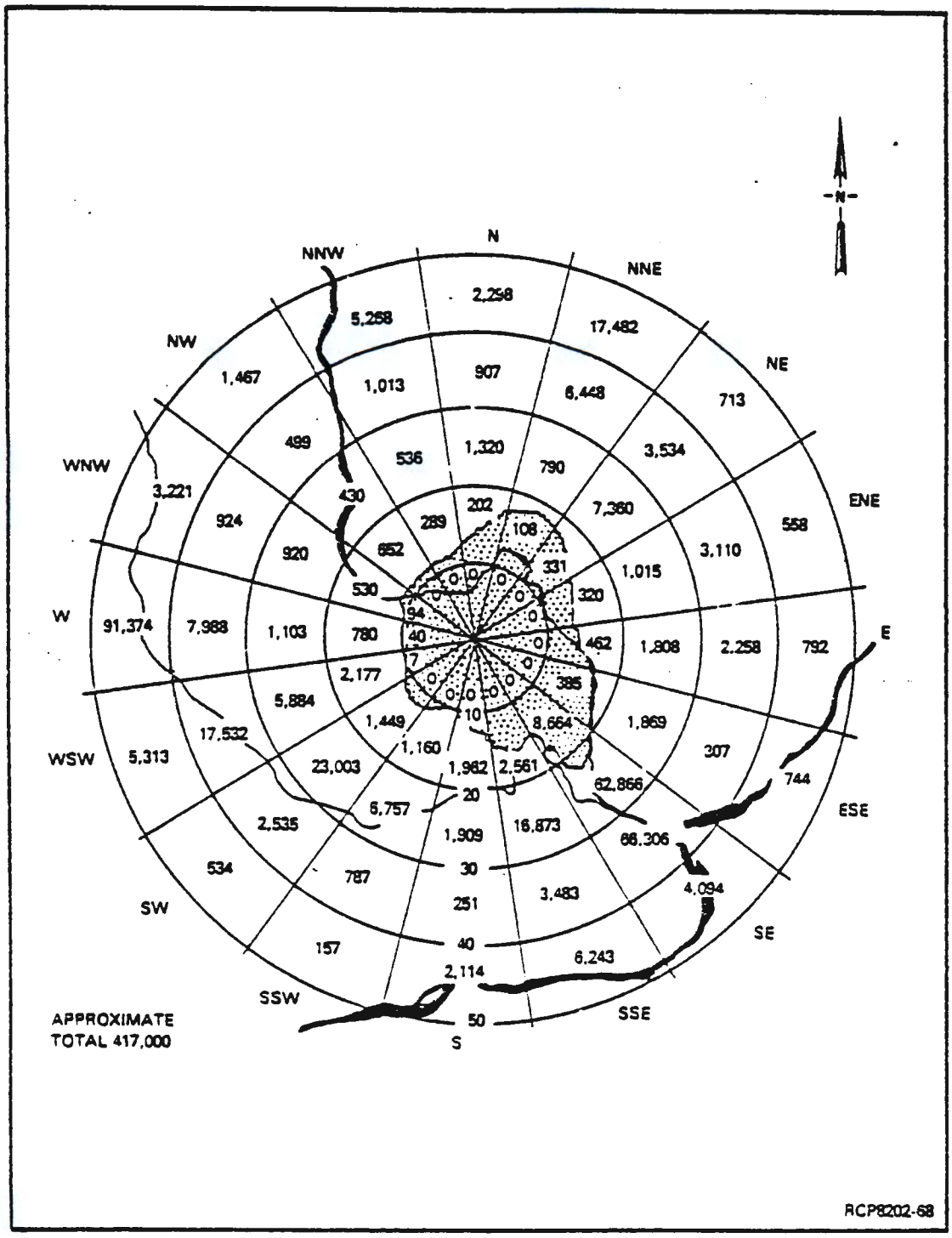


FIGURE 3-6. Estimated Geographic Distribution of the 1990 Population Within a 50-Mile Radius of the Hanford Meteorological Station.

## 3.3 NEARBY INDUSTRIAL, TRANSPORTATION, AND MILITARY FACILITIES

B Plant is located near the center of the Hanford Site and there are no nearby military facilities. Two commercial facilities are located nearby; U.S. Ecology is located on land leased from the State of Washington. The site is within 5 mi of B Plant and handles low-level radioactive wastes. WNP-2, a nuclear powered electricity-generating facility, is located 12 mi ESE of B Plant on land near the Columbia River. The nearest military facility is the U.S. Army Yakima Firing Range, located just northwest of the Hanford Site western boundary.

Local roads include State Highways 24 and 240 (Fig. 3-2). These highways and the site roads are used by a variety of private and commercial vehicles. The separation of the highways from B Plant is such that no adverse effects from associated accidents are projected for B Plant operations.

There are no private or commercial airports within a distance of 20 mi from B Plant. The Richland Airport, nearest to the site, is a small, general-utility airport. The Tri-Cities Airport at Pasco, used by "feeder" airlines, is 28 mi from the site. Due to the low volume of air traffic and distance of airports from the site, the probability of a private or commercial aircraft accident affecting the plant is remote. However, a heliport, used by the Hanford Patrol, is located approximately two miles southwest of B Plant.

There are no refineries, major oil storage facilities, munitions, or explosives storage facilities within 20 mi of the site, other than the munitions controlled by the Hanford Patrol onsite. The nearest natural gas transmission pipeline is approximately 30 mi away. The considerable distance of these facilities from B Plant eliminates these potential hazards to the plant.

A tabulation of the active nuclear areas on the Hanford Site is presented in Table 3-1. Possible accidents at these facilities and the effects of such accidents on the safe operation of B Plant were reviewed. The safety analyses for the Washington Public Power Supply System (WPPSS) Plants, the Fast Flux Test Facility (FFTF), and N Reactor indicate that the radioactive releases as a result of the postulated maximum credible accident for each facility will not present an unacceptable risk to B Plant operations. The distance of these facilities from B Plant and the engineered safeguards built into each plant provide adequate assurance that no significant hazard to B Plant or personnel could result from these nuclear areas outside the 200 Areas.

The Plutonium Finishing Plant (PFP), located in the 200 West Area, is about 5 mi from B Plant. This is sufficiently close to B Plant to have an impact on its operations should a major release of plutonium occur from PFP. An analysis of the PFP plutonium handling operations has been made with the conclusions that undue risk does not exist (Ref. 3-3, 3-4). The PUREX Plant, located in the 200 East Area, about 1 mi from B Plant, is also



9 3 1 2 8 9 9 1 7 8 2

TABLE 3-1. Active Hanford Nuclear Areas.

| Area | Facilities | Distance from B Plant (mi) |
|---|---|---|
| 100 | 100 N Reactor, irradiated and nonirradiated fuel storage, laboratory, test loop, Hanford Generating Project. | 8 |
| 200 East | PUREX, B Plant, critical mass laboratory, laboratories, waste retention and treatment | 0.5 to 1.5 |
| 200 West | Plutonium processing, storage, and reclamation, waste storage and disposal, laboratories | 1 to 5 |
| 300 | Fuel and fissile material storage, metal fabrication development, plutonium laboratory, fuels manufacture, radiochemistry, radiometallurgy, waste vitrification, subcritical facility | 17 |
| 400 | FFTF | 12 |
| 600 | U.S. Ecology | 2 |
| WPPSS | WPPSS-2, Reactor (operating) | 12 |
| | WPPSS-1, -4 Reactors (construction halted) | 12 |

sufficiently close to B Plant to have an impact on its operations for the same reason. An analysis of PUREX operations has concluded that undue risk does not exist (Ref. 3-6).

Toxic gas (chlorine) is stored in 1-ton cylinders at the water treatment plant located about 0.5 mi away. A gross leakage would not result in safety problems at B Plant (Ref. 3-7).

## 3.4 REGIONAL CLIMATOLOGY AND METEOROLOGY (Ref. 3-1)

The Cascade Range to the west greatly affects the climate of the Hanford area. Storm tracks generally move from the Pacific Ocean across the Cascades and then across the Hanford Site. The physical geographic effect of this range helps create the moderate winters, hot summers, and the relative dryness of the Hanford area.

Average annual precipitation is 6.25 in.; 40% of the annual precipitation occurs during November, December, and January; whereas, only 11% occurs in July, August, and September. The driest month is July with 0.18 in. and the wettest month is January with 0.98 in.

A maximum annual rainfall of 15 in. has only 0.2% chance of occurring. Precipitation in excess of 0.5 in. during a 24-h period occurs on an average of twice a year. Rainfall of 1 in. has occurred only 3 d in the last 30 yr of recorded data (1946 through 1975). One of these was the record storm of October 1 through 2, 1957. During this storm, a total rainfall of 1.91 in. was recorded in 24 h. Of this total, 1.08 in. were recorded in 3 h, 1.68 in. in 6 h, and 1.88 in. in 12 h. At the other extreme, there have been 81 consecutive days without measurable precipitation (June 22 to September 10, 1967) and 172 d with only 0.32 in. (February 24 to August 13, 1968).

About 39% of all precipitation from December through February is in the form of snow. However, an accumulation of as much as 6 in. on the ground can be expected only one winter in eight. The average seasonal number of such days of reported precipitation in the form of snow is 4; although the 1964-65 winter had 35, 32 of which were consecutive.

The Cascade Range serves as a source of cool air, especially during the summer months, and has a considerable effect on the Hanford Site wind regime. The drainage (gravity) wind, plus topographic channeling, causes a considerable diurnal range of speeds during the summer. In July, average speeds range from a low of 5.2 mi/h, from 0900 to 1000 h, to a high of 13.0 mi/h from 2,100 to 2,200 h. In contrast, the corresponding speeds for January are 5.5 and 6.3 mi/h.

While gravity winds occur with regularity in the summer, these are seldom strong unless reinforced by frontal activity. In June, the month of highest average speed, there are fewer instances of hourly averages exceeding 31 mi/h than in December, the month of lowest average speed. It is also notable that, although channeling results in a prevailing west-northwest or northwest wind the year around, the greatest wind speeds are from the southwesterly direction.

Light winds at Hanford in the winter cause considerable atmospheric stagnation. December, for example, has an average of 10 d with a peak gust under 13 mi/h. By contrast, only once in 7 yr does June have even one such day.

The average maximum temperatures in January and July are 37°F and 92°F, respectively. The average minimum temperatures for the same months are 22°F and 61°F, respectively. The average monthly relative humidity varies from a low of 31.8% in July to a high of 80.4% in December. The minimum diurnal temperature in winter seasons ranges from -27°F to 22°F; the maximum diurnal temperature in summer seasons vary from 100°F to 115°F.

## 3.5 GEOLOGY AND HYDROLOGY (Ref. 3-1)

The Hanford Site lies in a portion of the geologic formation known as the Columbia Plateau Physiographic Province. It is part of a smaller subdivision called the Pasco Basin, which is composed of thick layers of basalt interspersed with thick layers of sedimentary material. These sedimentary layers are water bearing, and collectively constitute a vertically stratified series of confined aquifers beneath the Hanford Site.

Above the uppermost layer of basalt lies the unconsolidated sand and gravel of the Ringold Formation, which ranges up to 305 m (1,000 ft) in depth. Above this, and extending to the surface, is the Hanford Formation, covered by a thin layer of windblown silts and sands. Over 1,500 wells have been drilled to provide data for evaluating the chemical and physical properties of the underlying materials and to study movement of radioactive materials in soils.

Neither the maximum expected rainfall over the next 1,000 yr nor the effect of the 100-yr probable flood of the Columbia River would pose any added hazards to operations in the 200 Areas. As discussed previously, the climate at the Hanford Site is arid to semiarid with an average rainfall of 6.25 in.

A calculation of the effect of a Columbia River flood, which might occur in the next 1,000 yr, on waste management operations has been performed. This dam-regulated "probable maximum flood" (PMF) is one previously predicted by the U.S. Army Corps of Engineers. This projection was derived using extensive data and computer modeling techniques and incorporating assumptions for a combination of conditions which are the most severe and are considered "reasonably possible" for the Columbia River Basin. Contributing factors of winter snow accumulation, spring melting, and runoff-season rainstorms were maximized.

The basic cause of the PMF would be spring snowmelt runoff in the mountains of the Columbia River watershed following exceptionally cold and wet weather during the October to April snow accumulation season. It was assumed that, over the Columbia River Basin as a whole, the October to April precipitation equaled 1.3 times the normal annual precipitation. Unusually rapid melting due to meteorologic conditions was predicted as a result of the assumption of extreme seasonal values for air temperatures, dewpoint, solar radiation albedo, and wind speed. In addition, two hydrologically significant (the most severe considered "reasonably possible") basin-wide rainstorms were assumed. It was also assumed that rain contributions to the PMF fell entirely during two 5-d periods during the snowmelt season. Mid-May was arbitrarily chosen for the first storm; the second was timed to maximize the natural peak discharge of the lower Columbia River. The calculation shows that, even under these circumstances, there would be no effect on B Plant and other operations in the 200 Areas. The maximum recorded 24-h precipitation has been 1.91 in. Even an 11-in., 24-h downpour would not cause flooding in the 200 Areas.

A worst-case flood would result from a postulated 50% breach of Grand Coulee Dam. The ensuing flood of 8,000,000 $ft^3/s$ would crest at about 460 ft above MSL in the channel between 200 East Area and Gable Mountain. B Plant would be well above the crest of the flood, but normal operations could not be continued. (The export water line and certain electrical transmission lines would be affected by the flood, necessitating the use of backup services at B Plant). Aside from the hypothetical breach of Grand Coulee Dam, surge- or seiche-type flooding cannot occur there.

## 3.6 VOLCANIC ASHFALL

The Hanford Site has experienced mild ash fallout as a result of the eruption of Mt. St. Helens. No problems were experienced from such fallout, but the event did require the evacuation of nonessential personnel and shutdown of operations. Although a heavy deposition could present health hazards due to respiration of ash and water supply contamination, it is not expected that such an event will cause a hazard to the public or the environment by B Plant operations. Nevertheless, if such an event develops, two to six hours warning is expected, and appropriate shutdown procedures will be initiated.

## 3.7 SEISMOLOGY (Ref. 3-1)

Hanford facilities are exposed to the possibility of moderate earthquake damage from two sources: (1) the active seismic zones of western Washington, and (2) closer shocks originating in the seismic zone that includes Walla Walla.

A safe shutdown earthquake (SSE) of 0.25 g for the Hanford Site allows for an earthquake of an intensity of MM-VIII on the Modified Mercalli scale, epicentered at the same site. This is considered conservative, since no earthquake of this magnitude ever has been recorded in eastern Washington or Oregon. The greatest earthquake intensity registered in the Pasco Basin is a MM-V or VI ($\sim$0.05 g) on November 1, 1918, near Corfu, 21 mi north of the center of the site. The largest recorded earthquake in the Columbia Plateau was of MM-VII on July 15, 1936, near Milton-Freewater, Oregon, 60 mi southeast of Hanford (Ref. 3-1).

The December 14, 1872 earthquake in the North Cascades, as reported in Reference 3-5, is estimated to have resulted in an intensity of MM VI at the Hanford Site. All other reported events attenuated to intensities of MM IV or less. The largest local earthquake, mentioned above, of historical record occurred at Corfu. Various damage estimates have been reported resulting in a classification of MM IV or V. Estimates of the peak ground acceleration made for the Corfu event range from 0.01 to 0.03 g. Data indicate that no events larger than MM V to VI have occurred in the vicinity of the 200 Areas.

## 3.8 REFERENCES

3-1. ERDA-1538, December 1975, Final Environmental Statement, Waste Management Operations, Hanford Reservation, U.S. Energy Research and Development Administration, Washington, D.C.

3-2. PNL-4010, November 1981, Population Estimates for the Areas Within a 50-Mile Radius of Four Reference Points on the Hanford Site, D. J. Sommer, R. G. Rau, and D. C. Robinson, Pacific Northwest Laboratory, Richland, Washington.

3-3. RHO-CD-1244, Rev. 1, October 1983, Z Plant Plutonium Handling Operations, E. C. Vogt, Rockwell Hanford Operations, Richland, Washington.

3-4. SD-HS-SAR-007, Rev. 3, September 22, 1982, Plutonium Finishing Plant, E. C. Vogt, Rockwell Hanford Operations, Richland, Washington.

3-5. Coombs, H. A., W. G. Milne, O. W. Nuttlie, and D. B. Slemmons, 1976, "Report of the Review Panel of the December 14, 1972 Earthquake," Washington Public Power Supply System Preliminary Safety Analysis Report, Amendment 23, Appendix 2R A, Richland, Washington.

3-6. SD-HS-SAR-001, Rev. A-1, September 9, 1983, PUREX Plant Final Safety Analysis Report, C. W. Manry, Rockwell Hanford Operations, Richland, Washington.

3-7. Romsos, M. R., et. al., February 15, 1985, Volatile Chemical Investigation, Industrial Health and Safety Department, Rockwell Hanford Operations, Richland, Washington.

THIS PAGE INTENTIONALLY
LEFT BLANK

# 4.0 PRINCIPAL DESIGN CRITERIA

This chapter presents the design criteria applicable to safety class components, systems, and structures. In accordance with DOE Order 5480.1A (Ref. 4-1), the current functional criteria and applicable standards are enumerated. Survivability and other assessments of the plant are presented in the following chapters.

B Plant, one of Hanford's original fuel separations "old" facilities with a beneficial use date prior to October 3, 1977 (Ref. 4-2), was constructed between August 1943 and February 1945 and was operated, using the Bismuth Phosphate Process, until 1952 (Ref. 4-3). B Plant was converted in 1968 to a waste fractionization plant as a result of a program to develop methods for the solidification of high-level waste. Its present function has been to remove $^{137}Cs$ and $^{90}Sr$ from PUREX current acid waste, $^{137}Cs$ from high-level supernatant liquids, and $^{90}Sr$ from self-boiling liquid waste sludges.

## 4.1 CLASSIFICATION OF STRUCTURES, COMPONENTS, AND SYSTEMS

When B Plant was designed and constructed, structures, components, and systems were not specifically classified as to safety function, seismic considerations, or quality assurance level (Ref. 4-4). However, all process vessels were grouped into three classifications, according to location and use; descriptions follow:

- Class I Vessels. Class I vessels are essentially of all welded stainless steel construction with carbon steel used only for necessary external attachments. The carbon steel attachments are protected with a coating of Amercoat and are not in contact with process solutions. Double butt welds are used for pressure holding seams where possible. The quality of the welds is controlled by radiographic testing or by other specialized techniques depending on the location of the weld.

  All piping in the hot pipe trench (HPT) for inter-cell intra-section transfer of radioactive solutions is made of stainless steel.

  Class I vessels are the vessels normally located in the process cells, handle radioactive materials, and are designed for remote maintenance and handling.

- Class II Vessels. Class II vessels, like Class I vessels, are of all-welded stainless steel construction with carbon steel used only for supports and attachments not in contact with a process solution.

For the design and fabrication of Class II vessels as pressure vessels, the general requirements of the ASME Boiler Construction Code were followed. Basic design pressures were taken to be an internal pressure of 15 psig or 110% of the operating pressure, whichever is greater, and an external pressure of 5 psig.

For the design and construction of Class II atmospheric tanks, the general requirements of the American Petroleum Institute Standard 12C were followed. Designs were for the maximum internal pressure imposed by a liquid of 1.8 sp. gr. with loads due to wind pressure and earthquake forces also considered.

Class II vessels are the aqueous makeup unit (AMU) tanks, the head tanks and weight tanks in the operating gallery, and certain chemical storage tanks in the 211-B Chemical Tank Farm. As the vessels do not contain radioactive solutions, contact maintenance is performed and the design tolerances are less stringent than with Class I vessels.

- Class III Vessels. Specifications for Class III vessels are similar to Class II vessels except for the materials of construction. Examples of Class III vessels are the ammonia storage tank, the carbon dioxide storage tank, the caustic storage tanks, and the diluent storage tanks. These are designed for contact maintenance, and can be constructed of any material appropriate for the intended use.

4.1.1 Quality Assurance Levels.

Although not applicable in 1944, the current Quality Assurance Procedure (Ref. 4-5) establishes the requirements for assigning Quality Levels to new projects, engineered equipment and maintenance modification or repair to existing facilities to identify the level of quality assurance effort necessary to objectively verify and assure compliance to design requirements.

- Impact Level I: Physical systems, or portions of systems, structures or components whose failure might cause, or increase the severity of a release of radioactivity, or a release of hazardous or toxic materials to the environment and those structures and components vital to isolation of the process or system, are classified as Level I.

  Level I includes highly complex or complicated items that can directly affect operability, performance or safety of the facility.

  Examples of Level I items are: primary containment systems for radioactive service, final exhaust systems up to and including the high-efficiency particulate air (HEPA) filter package, nuclear safety instrumentation, effluent monitors, shipping containers, and process piping.

- Impact Level II: Physical systems, or portions of systems, structures or components that are important to the operation of the process or system but are not essential to safe shutdown and isolation are classified as Level II. Level II items are generally moderately complicated and failure may create a serious impact on the operation, performance or safety of the facility and often create an impact on cost, schedule, or programmatic results.

  Examples of Level II items are: process vessels, jumpers, in-cell piping and process equipment, fire detection systems, and control instrumentation.

- Impact Level III: Those structures and equipment that are related to the process or system operation, are not essential to safe shutdown, but do provide a function or service to the facility, are classified as Level III.

  Level III also applies to those items that are commercial, off-the-shelf items for which existing commercial quality control practices are adequate. (Level III commercial items may be used in Level I and Level II systems with appropriate testing of the system.)

  Examples of Level III items are: heating and air conditioning systems, potable water systems, sewage systems, cold drain systems, low pressure steam systems, lighting systems, transportation systems, and brick and mortar facilities.

### 4.1.2 Guidelines for Assignment of Facility Operating Conditions to an Accident

The design criteria for radiation exposures to the occupational worker from normal, emergency, and accidental conditions shall be limited to radiation levels as low as reasonably achievable (ALARA) within the standards prescribed in Ref. 4-40.

### 4.1.3 Definition of a Safety Function

A safety function is an essential performance characteristic of a component, system, or structure that is required for the protection of the environment, safety, and health of personnel against potential radiological and chemical hazards. Safety class components, systems or structures shall be able to perform some or all of the following functions:

- Prevent or mitigate the consequences of an uncontrolled release in excess of the recommended guidelines or threshold limits

- Of radioactivity with potential radiological consequences
- Of chemicals with potential toxicogenic, carcinogenic, and explosive consequences

- Limit radiation and hazardous chemical exposure to personnel
- Maintain the facility in a safe shutdown condition
- Maintain nuclear criticality safety.

### 4.1.4 Definition of a Single Failure

A single failure is an occurrence which results in the loss of capability of a component to perform its intended safety function(s). The loss of capability of several components resulting from a single initiating event, such as an earthquake, is considered to be a single failure. Systems are considered to be designed against an assumed single failure if neither a single failure of any active component (assuming passive components function properly), nor a single failure of any passive component (assuming active components function properly) results in a loss of the capability of the system to perform its safety function(s).

### 4.1.5 Interface Requirements

Components, systems, or structures, not required to perform safety functions, shall not impair the function of a safety class component, system, or structure.

## 4.2 PROTECTION AGAINST NATURAL PHENOMENON

The design of components, systems, and structures shall ensure protection from the consequences of a spectrum of severe natural phenomenon. The design bases for these components, systems, and structures shall reflect: 1) consideration of the most severe natural phenomenon based on site specific investigations where possible, 2) appropriate combination of the effects of normal or accident conditions with the effects of natural phenomenon, and 3) the importance of the safety function to be performed.

APPLICATION: Using the state-of-the-art knowledge and applicable criteria prevalent during the period (1943) of the design and construction of B Plant and preceding the inclusion of seismic provisions in the Uniform Building Code, natural force resistance required consideration of static, and vertical live and dead loads. During this period, Hanford was designated as a low intensity, minimum occurrence earthquake zone and the facility was designed to withstand lateral wind forces according to the Uniform Building Code but the design did not consider a tornado (Ref. 4-6).

Current policy and practice impose criteria that the B Plant facility shall be able to withstand:

- Wind and Tornado Loadings. The compiled data of an extensive survey of tornadoes in the three northwestern states (Washington, Oregon, and Idaho) completed in 1970, was analyzed to determine the probability of a tornado striking the facility approximately 2.5 mi east of Hanford Meteorological Station. The analysis indicated the probability of tornado occurrence in the vicinity of the site as six chances in a million ($6 \times 10^{-6}$) during any given year, or about one chance in four thousand ($2.5 \times 10^{-4}$) during a 40-yr plant life (Ref. 4-6).

  A tornado having a maximum tangential wind speed of 120 mph with an ambient pressure drop of 28 $lb/ft^2$ and an ambient pressure drop rate of 12 $lb/ft^3/sec$ is defined as a Design Basis Tornado (DBT) (Ref. 4-7).

- Water Level (Flood) Design. The "Probable Maximum Flood" (PMF) is the dam-regulated flooding condition predicted by the U.S. Army Corps of Engineers (Fig. 4-1). Flooding of the B Plant site has been judged to be incredible (Ref. 4-6 and 4-8). A more recent evaluation confirms this judgment (Ref. 4-9).

- Seismic Design. The maximum credible earthquake for the Hanford Site is postulated to be a Richter Magnitude of 6.8 (with an epicentral distance approximately 10 mi from the Hanford Waste Management facilities) which produces a maximum vertical ground acceleration two-thirds of the horizontal acceleration (Ref. 4-10). The 0.25 g earthquake has an occurrence associated with an unlimited time span per occurrence whereas the probability of 0.20 g would be once in 16,700 yr, 0.15 g once every 4,000 yr, 0.10 g once every 1,850 yr and 0.05 g once every 840 yr (Ref. 4-6).

  The response defined in the criteria (Ref. 4-11) for the evaluation of B Plant are the safe-shutdown earthquake (SSE) response spectra, with a peak free field ground surface acceleration of 0.25 g that was developed in a study for the Fast Flux Test Facility at the Hanford Site (Ref. 4-12) and the Hanford regional historical earthquake (HRHE) response spectra with a peak ground acceleration of 0.10 g that was developed for the PUREX Plant site (Ref. 4-13).

- Volcanic Ash Deposits. The last volcanic eruption caused a high loading of the inlet filters to the canyon and the galleries. However, none of the filters was breached and, as indicated by differential pressure measurements, many of the filters were not plugged. Renewed volcanic eruptions from Mt. St. Helens, or other potentially active peaks, are possible.

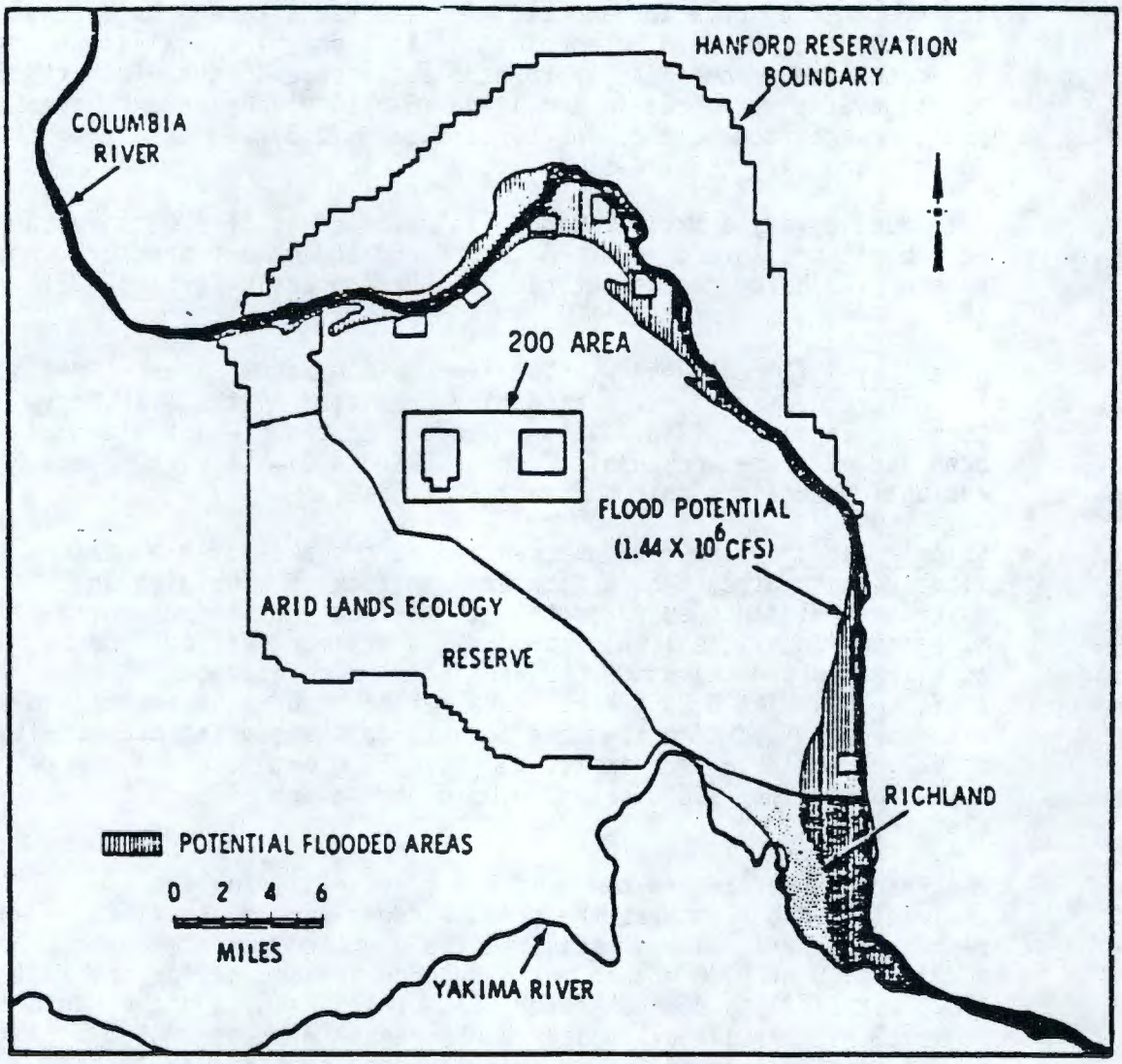


FIGURE 4-1. Map of Flood Potential.

Dry ashfall in combination with snow loading (but not earthquake or wind loads) is included in present criteria but was not prevalent at the time of the design of the plant. However, early notification by the National Attack Warning System (NAWAS) should provide between two to six hours for the implementation of protective action. Public address, crash alarms, and priority message systems will be utilized to effect in-plant notification.

- Lightning. While severe lightning storms are not common to this local area, lightning does occur. Hanford Standard D-20-9B contains the grounding criteria for B Plant.

- Range Fire. The contaminated land on the Hanford Site has been stabilized by covering with clean overburden and herbicide treatment. An average of 12 fires per year have occurred. During the past 10 yr, four fires have burned an area at least as great as the B-C crib in the controlled area, approximately 3,000 acres. The area is barren and devoid of vegetation in the near vicinity of the plant and its auxiliary buildings. The occurrence of a direct fire, impacting stored chemicals or releasing and transporting airborne contamination, is a low probability.

The ability of the Waste Fractionization structures to survive the forces of natural phenomenon have been evaluated based upon the results of stress analysis and engineering judgment. Stress analysis results have been tempered with engineering judgment to evaluate the varying degree of structural and material degradation to factor the process of aging and imposition of continuous operational loadings during the past four decades. Evaluation of structural safety and survivability based primarily upon the present code requirements was also deemed conservative. To obtain a more realistic evaluation of structural safety and survivability, refer to Chapter 9.0.

## 4.3 MISSILE PROTECTION

The spectrum of design basis missiles to be considered in the design of a particular facility shall be determined on the basis of the severe natural phenomenon postulated for the site and the potential consequences of missile strikes on safety class components, systems, and structures.

APPLICATION: Missiles generated from a design basis tornado (DBT) are considered most limiting (Ref. 4-7). The following objects, traveling end-on at any height, could result from a 175 mph DBT.

| Object | Length | Width | Thickness | Horizontal velocity (ft/s) | Max. impact height (ft) |
|---|---|---|---|---|---|
| Wood Plank | 12 ft | 12 in. | 4 in. | 95 | 200 |
| Steel Pipe | 10 ft | 3 in. (dia.) | -- | 65 | 100 |

## 4.4 ELECTRIC POWER SYSTEMS

The Class IE (normal or standby) electric power system shall be designed to include suitable redundancy and separation of redundant components to ensure adequate availability of capacity and capability for the components and systems to perform their safety function.

APPLICATION: Existing equipment, wiring to existing motor control centers, and panel boards are outmoded. Present plans call for extending the B Plant useful life for twenty or more years. To accommodate an upgrade of the B Plant electrical emergency system a number of ongoing projects have been initiated.

Project B-428 (Ref. 4-14) provides an intertie between the 13.8 kV primary services and a new 480 VAC distribution system which will replace the existing installation with a new 3-phase, 4 wire, solid grounded neutral system. Design includes replacement of outmoded equipment and a short-circuit study. The useful life of the new medium voltage system is at least 20 yr. Project B-429 will provide a new emergency system and lighting distribution system. Project B-430 will provide a secondary power distribution system to motor control centers and panelboards.

## 4.5 INSTRUMENTATION AND PROTECTION SYSTEM

The safety class instrumentation and controls shall provide the facility with sufficient information and control capability to: 1) readily determine the status of critical facility parameters for operating the facility within Operating Safety Requirements (OSR) limits, 2) initiate safety related action when necessary, and 3) determine the status of the protection system.

The protection system shall automatically initiate protective actions based on the detection of abnormal facility conditions to safely shut down the facility and to mitigate the consequences of postulated accidents.



9312891795

APPLICATION: The Rockwell Hanford Operations Instrument Calibration Manual (Ref. 4-18) documents the management system used for calibration and instrument control which includes criteria for determining calibration requirements, specification guidelines, labeling status, and detailed description of the automated calibration tracking systems--the Maintenance Instrumentation Calibration Systems (MICS) and Process Instrument Surveillance, Calibration and Evaluation System (PISCES). A composite listing (Ref. 4-19) of B Plant process instrumentation has been documented to provide comprehensive listing of instruments in an organized and auditable form.

There are no sources of energy with sufficiently high concentrations at B Plant that require rapid response of safety class systems. The relatively long time period generally needed for the development of conditions hazardous to health and safety enhances the practicality of manually or remote-manually initiated protective actions which are initiated by the operator/dispatcher in response to abnormal readings or alarms from safety class instrumentation. Instrumentation for the ventilation, process, effluents, and radiation monitoring are discussed in Chapters 5 through 8, respectively.

## 4.6 COOLING WATER AND WATER SUPPLY SYSTEMS

Safety class cooling water systems shall be designed to incorporate sufficient redundancy and independence to ensure that safety class systems are adequately cooled and that adequate emergency water supplies shall be available during normal operations and accident conditions with the addition of a single failure of a component in the cooling water system.

APPLICATION: Cooling water system is discussed in Chapters 5 and 6. Salient features are outlined in the following paragraph.

Redundant supply (primary and backup) systems ensure availability of cooling water to the process tanks. Hydrostatic tests during installation and operability tests conducted before placement into service minimize risk of containment loss due to coil failure. The positive differential pressure between the coil and the process vessel forces leakage into the vessel. Radiation monitors, maintained in a mode of maximum sensitivity, assure detection of out-leakage of process fluid into the raw water discharge system. The process vessels with no cooling water respond sluggishly (1 1/2 days) (Ref. 4-20) under adiabatic heat-up conditions to temperature excursions resulting in environmental releases. This allows sufficient time to restore water supply or implement emergency procedures to minimize uncontrolled releases to the environment.

## 4.7 FIRE PREVENTION AND PROTECTION

The fire protection system in accordance with DOE Order 5480.1A, Chapter VII (Ref. 4-21), shall be designed to prevent, detect, suppress, and minimize the probability of occurrence and the effects of fires and

combustion explosion and to ensure the safety function of components, systems, and structures required to mitigate and confine the release of radioactivity to the environment.

APPLICATION: Rockwell Hanford Operations Accident Prevention Standards (Ref. 4-22) requires compliance with DOE Order 5480.1A, Chapter VII and DOE-RL 5480.7 (Ref. 4-23).

As a result of fire protection surveys (Ref. 4-24, 4-25), Rockwell fire protection engineers determined that the B Plant, and the buildings in its vicinity, are in need of fire protection upgrading to bring these buildings into compliance with the current National Fire Protection Association (NFPA) 101, "Life Safety Code." The primary areas that need upgrading are the exit stair enclosures, vertical and horizontal floor and wall penetrations, ventilation ducting, and existing doorways. Other buildings are in compliance with the Life Safety Code.

Project B-472 (Ref. 4-26) will provide the necessary fire doors, ventilation duct fire dampers, wall upgrades, horizontal and vertical penetration sealing, door closers, door hold-open devices, and fire alarm panels to bring the 271-B and 221-B Buildings into compliance with the current NFPA 101, "Life Safety Code."

## 4.8 NUCLEAR CRITICALITY SAFETY

Nuclear criticality safety, generally achievable through a composite of design and administrative measures, shall ensure that operations involving fissile materials are conducted such that an adequate margin of subcriticality exists during all normal and credible abnormal conditions.

An assessment shall be made as early as practical in the design or modification of a facility to determine if the potential for criticality exists. This assessment shall be performed with the assistance of a nuclear criticality specialist familiar with operations proposed for the facility.

Based upon the assessment, the requirements for nuclear criticality safety shall be implemented.

APPLICATION: B Plant is classified as a "limited-control" (Ref. 4-27) facility with regard to nuclear criticality safety in Standard IV of Reference 4-28 and as such the controls to prevent criticality are delineated in a letter from the Manager, Criticality Engineering and Analysis (CE&A) to the facility manager. This CE&A letter constitutes a promulgation and is included in Reference 4-27 for documentation purposes. The possibility and consequences of achieving criticality are considered to be extremely small. However, the processing of high-level waste requires processing of large volumes of waste solutions to recover fission products.

Plutonium, present in trace quantities of up to a few hundredths of a gram per liter in feed streams, creates a possibility for plutonium to accumulate. Criticality safety in B Plant is maintained by the following mechanisms.

- Control by Mass Limits. The quantity of fissile material is limited to an amount less than half that required to sustain a nuclear reaction under any credible condition of geometry, moderation and reflection. A double-batched condition shall not result in an effective neutron multiplication factor ($K_{eff}$) higher than the applicable value under the worst foreseeable condition. The mass limits are specified in Reference 4-29.

- Control by Concentration Limits. The concentration of fissile material dispersed in another medium is to be limited such that neutron absorption in the solution prevents criticality. The concentration of plutonium in B Plant or associated facilities shall not exceed 23 g/gal of solution. Settled precipitate densities in excess of 23 g/gal are not considered a violation of this specification (Ref. 4-29).

- Control by Sampling and Analyses. Sampling and analyses are an integral part of the activities required to monitor, control, and evaluate B Plant processing and waste disposal operations (Ref. 4-30).

## 4.9 RADIOACTIVE BY-PRODUCT AND EFFLUENT MANAGEMENT SYSTEMS

All waste whether in containment (or confinement) configurations including ground discharge or burial sites shall be as secure as technically and economically practicable considering both the radiological consequences of credible system failures and the potential need for later removal for reprocessing or relocation. The integrity of each such system shall be assessed on a routine basis by the best practicable method.

The radioactive waste management system shall be designed to permit periodic inspection, maintenance, and testing of subsystems and components that have safety functions to assure their continued functioning for the life of the facility.

APPLICATION: The Environmental Protection Manual (Ref. 4-2); the Hanford Radioactive Solid Waste Packaging, Storage and Disposal Requirements; (Ref. 4-33) and Hazardous Material Packaging, Shipping and Transportation Manual (Ref. 4-34) are consistent and compatible with U.S. Department of Energy requirements and provide detailed and specific criteria and standards that are usable by Rockwell functions and program.

Waste streams (liquid and gaseous) are routinely sampled and analyzed for radionuclide content, and the discharged volumes are measured for the concentration of radioactivity released. Liquid waste streams, are routed to cribs, ponds, ditches, and the ground water wells associated with active

disposal sites are sampled and analyzed routinely to determine compliance with applicable limits. Any incident involving release of radioactivity to the environment via a route which is normally not monitored is reported to the Manager, Waste Fractionization and Encapsulation Process Engineering within 24 h.

The time, location, mechanism (line failure, spill, tank leak), volume of liquid or gas escaping and the amounts of all radionuclides released are included in the next monthly disposal report. In addition, these events are documented as Unusual Occurrences, Off-Normal Events, and/or Radiation Occurrences as appropriate.

Projects have been initiated to upgrade presently outmoded systems.

- Project B-432 (Ref. 4-35) has replaced the existing stack effluent monitoring system with the Rockwell generic stack sampling and monitoring open-rack assembly and instrumentation, with the remote-alarm annunication located in the 271-B Building dispatcher's office.

- Project B-356 (Ref. 4-36) repaired and replaced sections of the chemical sewer system where leakage was occurring. A sampler at the flow measurement weir and a radiation monitor system in the 2904-EA Building have been installed.

- The upgrades will permit collection of samples which will more accurately reflect effluent conditions. This is essential to provide assurance that releases are as low as reasonably achievable (ALARA) and within the constraints of the established concentration guidelines at the point of discharge.

Hazard Identification and Evaluation (Ref. 4-37) for the upgrade of 200 Area Stacks Study concluded that Stacks 296-B-5, 296-B-13, and 296-B-14 did not meet current design requirements nor were representative samples obtained as required for demonstrating compliance with effluent standards. Rockwell Hanford Operations' Low-Level Waste Management Program provided funds to upgrade these systems in accordance with the philosophy of ALARA (Chapter 2, Ref. 4-31). Stacks 296-B-5 and 296-B-13 have been upgraded (Ref. 4-51).

Liquid effluent samplers and monitors were evaluated (Ref. 4-38) and, as a result of the assessment, identified deficiencies are being addressed in the upgrade plan (Ref. 4-39) for B Plant in the following areas:

- Steam condensate (BCS)

- Cooling Water (CBC)

- Process Condensate (BCP)

- Chemical Sewer (BCE).

See Chapter 8 for additional details.

## 4.10 RADIATION PROTECTION SYSTEM

The radiation protection system, incorporating administrative procedures, facility layout, training, and protective hardware, shall be designed to assure that occupational exposure in controlled areas and offsite radiation exposure in unrestricted areas due to routine releases of radioactive material shall be maintained ALARA (Ref. 4-31) in accordance with DOE Order 5480.1A, Chapter XI (Ref. 4-40).

APPLICATION: The Radiological Standards and Operations Controls manual (Ref. 4-41) establishes the criteria and standards to be applied by Rockwell Hanford Operations to minimize radiation exposure to employees, visitors, and members of the general public as a consequence of the operation. These standards and criteria are in compliance with DOE Orders 5480.1A (Ref. 4-40) and 5481.1A (Ref. 4-1) to maintain all doses ALARA (Ref. 4-42 and 4-43).

Regulations and Practices (Ref. 4-44) governing the various phases of radiation work (e.g., planned entry into a radiation area, handling and transportation of radioactive material) and radiation work areas (e.g., posting of radiological areas, release radiation status) have been set forth to control and minimize radiation exposure. All radiation workers are required to become informed and abide by the governing regulations and practices. The implementation of these criteria and standards are delineated in Chapter 8.

## 4.11 DECONTAMINATION AND DECOMMISSIONING

Design of facilities, where radioactive and/or other hazardous contaminating materials are utilized or result from process operation within the facility, shall incorporate measures and confinement features to contain and limit dispersion to simplify decontamination and ultimate facility decommissioning and disposal or reuse (Ref. 4-45).

APPLICATION: Specific criteria to facilitate decontamination and decommissioning were not formulated during the design of the plant. However, decontamination was utilized to eliminate health hazards and to avoid complete dependence on remote maintenance (Ref. 4-3). Decontamination and decommissioning criteria were instituted as a requirement for federal buildings in 1972 and the latest revision is contained in DOE Order 6430 (Ref. 4-45).

The inherent design features of B Plant incorporate containment of process equipment within discrete cells in a singular array. These cells are covered by modular 6-ft-thick cover blocks provided with an adjustable clearance on the stepped interlocking edges. Piping for intersectional transfer of radioactive solutions is located in the hot pipe trench while the piping for inter-cell intra-sectional transfer piping is embedded in the concrete wall between the cells. The process chemicals transferred from the Aqueous Make-up Area are provided with seal pots and the utilities to the process tanks and equipment are isolated by gate valves, jet gang valves to

the jets, and in some cases by diaphragm operated valves (DOV) or pressure reducing valves (PRV). The valves and the seal pots form the boundary of the radio-chemical processing area.

To facilitate removal of gross radioactivity, stainless steel construction is used nearly exclusively for process equipment. Mild steel or reinforced concrete components, as well as the exposed concrete within the cell, are coated with suitable washable and strippable paints (Ref. 4-4).

## 4.12 CONDUCT OF OPERATION

A program in accordance with DOE Order 5480.1, Chapter 5 (Ref. 4-48), shall be established for the selection, training and examination, and retraining and reexamination of individuals who operate or supervise activities to assure that facilities are operated by personnel qualified to carry out their assigned responsibilities. Standards and guides considered specifically in the areas of emergency planning, physical protection and special nuclear material accountability for the consideration in the conduct of facility operations shall be identified.

APPLICATION: Rockwell Hanford Operations organizational structure and management control systems applicable to B Plant are discussed in Chapter 10. Provisions for selection, training, and examination of personnel, and normal and emergency planning with methods of implementation to ensure safe operation are also discussed.

## 4.13 OPERATING CONTROL AND LIMITS

To meet the requirements of DOE Order 5480.1, Chapter 5 (Ref. 4-47), Operations Safety Requirements shall be established to define limitations for safe operations commensurate with the potential risks associated with each particular nuclear facility.

APPLICATION: Operational Safety Requirements (Ref. 4-45, 4-46, and 4-47) in Chapter 11 delineates the bases for acceptable operating conditions within safety limits and outlines administrative controls required to assure a safe operation under all operating conditions.

## 4.14 QUALITY ASSURANCE

A quality assurance program in accordance with DOE Orders 5480.1, Chapter 2 (Ref. 4-47), and 5700.1 (Ref. 4-48) shall identify a definite assignment of organizational responsibility and an independent system for verifying compliance with adequacy of design and quality requirements.

The quality assurance program plan shall also specify the means of determining and assuring the level of quality for safety and non-safety class components, systems, and structures, as well as the method for developing and implementing the procedures and instructions for accomplishing the program.

APPLICATION: Quality assurance levels as such, were not specified for design and construction of the original B Plant; however, a high quality facility was realized by good design and construction practices. Quality assurance was formally instituted by ERDA MC 0820 (Ref. 4-49) superseded by DOE Order 5700.1 (Ref. 4-48) and implemented in the chemical processing facilities in 1975 by the ARHCO Quality Assurance manual (Ref. 4-5) with an objective of establishing a timely and responsive quality verification program supportive to B Plant activities by identifying the requirements and responsibilities imposed upon participating functions as delineated in the Quality Assurance Program Plan (Ref. 4-50). The current quality assurance program is described and its implementation at B Plant outlined in Chapter 12.

## 4.15 REFERENCES

4-1. DOE Order 5481.1A, August 13, 1983, Safety Analysis and Review System, U.S. Department of Energy, Washington, D.C.

4-2. RHO-MA-139, Environmental Protection Manual, January 1985, Rockwell Hanford Operations, Health, Safety and Environment Function, Environmental Protection Department, Richland, Washington.

4-3. HW-10475C, May 1, 1944, Hanford Technical Manual Section C, General Electric Co., Hanford Atomic Products Operations, Richland, Washington.

4-4. ISO-100, August 31, 1967, Waste Management Technical Manual, edited by J. S. Buckingham, Waste Management Process Engineering, Research and Engineering, ISOCHEM, Inc., Richland, Washington.

4-5. RHO-MA-150, May 23, 1983, Quality Assurance Manual, Rockwell Hanford Operations, Richland, Washington.

4-6. ERDA-1538, December 1975, Final Environmental Statement Waste Management Operations, Hanford Reservation, United States Energy Research and Development Administration, Washington, D.C.

4-7. RHO-RE-MA-11, May 1985, Natural Forces Considerations for Facilities Design, F. R. Vollert, Rockwell Hanford Operations, Richland, Washington.

4-8. RHO-CD-457, June 1980, General Safety Assessment Document for Rockwell Managed Non-Reactor Nuclear Facilities, Rockwell Hanford Operations, Richland, Washington.

4-9. RLO-76-4, 1976, Evaluation of Impact of Potential Flooding Criteria on the Hanford Project, U.S. Department of Energy - Richland Operations Office, Richland, Washington.

4-10. JABE-WADCO-3, February 1971, A Summary Report; Seismic Evaluation and Development of Ground Acceleration and Response Spectra for FFTF Site, J. A. Blume and Associates, San Francisco, California.

4-11. SD-RE-CR-003, February 28, 1983, Seismic/Tornado Design Criteria for Evaluation of Existing Structures and Equipment, B Plant Facilities, W. F. Smith, Rockwell Hanford Operations, Richland, Washington.

4-12. RHO-R-22, (JABE-VITRO-01), April 1971, Earthquake Analysis of the Waste Encapsulation Facility, Hanford Atomic Energy Reservation, J. A. Blume and Associates, San Francisco, California.

4-13. RHO-R-34, March 1981, Geologic and Seismic Investigation of the PUREX Building Site Near Richland, Washington, J. A. Blume and Associates, San Francisco, California.

4-14. SD-428-CDR-001, December 1982, Conceptual Design Report, B Plant Electrical Substation Upgrade - Project B-428, Kaiser Engineers Hanford Company, Richland, Washington, U.S. DOE Contract DE-AC06-82RL10367.

4-15. SD-429-CDR-001, December 1982, Conceptual Design Report, B Plant Load Center Upgrade - Project B-429, Kaiser Engineers Hanford Company, Richland, Washington, U.S. DOE Contract DE-AC06-82RL10367.

4-16. SD-430-CDR-001, December 1982, Conceptual Design Report, B Plant Electrical Cable Replacement - Project B-430, Kaiser Engineers Hanford Company, Richland, Washington, U.S. DOE Contract DE-AC06-82RL10367.

4-17. CD-465-CDR-001, January 1984, Conceptual Design Report, B Plant Electrical Status Indication Project B-465, Kaiser Engineers Hanford Company, Richland, Washington, U.S. DOE Contract DE-AC06-82RL10367.

4-18. RHO-PS-MA-1, March 10, 1983, Instrument Calibration Control Manual, G. R. Board, Rockwell Hanford Operations, Richland, Washington.

4-19. PCR-B-140-00001, August 1982, B Plant Process Instrument Calibration List, G. G. Hopkins, et.al., Rockwell Hanford Operations, Richland, Washington (DE-AC06-77RL01030).

4-20. ARH-139, November 15, 1967, Hazards Evaluation Waste Fractionization - B Plant (Project CAC-144) B Plant Modifications for FPCE - Waste Management Integrated Facilities (Project CAC-181) and Promethium Purification - B Plant (Project AAE-207), R. B. Bixler, et al., Atlantic Richfield Hanford Company, Richland, Washington.

4-21. DOE Order 5480.1A, August 1981, Environmental Protection Safety and Health Protection Program for DOE Operations, Chapter VII, "Fire Protection," U.S. Department of Energy, Washington, D.C.

4-22. RHO-MA-221, March 1979, Accident Prevention Standards, Industrial Hygiene and Safety, Volumes I and II, Rockwell Hanford Operations, Richland, Washington.

4-23. DOE-RL 5480.7, July 2, 1984, Fire Protection, U.S. Department of Energy, Richland, Washington.

4-24. Letter #16428.28, January 28, 1983, RL Appraisal of the Rockwell Hanford Operations Area Fire Protection Program, U.S. Department of Energy Contract DE-AC06-77RL01030.

4-25. Letter #72500-81-218, May 28, 1983, Fire Protection Survey of B Plant and Surrounding Facilities.

4-26. SD-472-FDC-001, April 1983, Miscellaneous Fire Doors and Life Safety Upgrade - Waste Management Facilities, Rockwell Hanford Operations, Richland, Washington.

4-27. RHO-MA-149, January 5, 1979, Miscellaneous Facilities Criticality Prevention Specifications, Rockwell Hanford Operations, Energy Systems Group, Richland, Washington.

4-28. RHO-MA-136, November 16, 1981, Nuclear Criticality Safety Standard, Criticality Safety Control of Fissile Material, Rockwell Hanford Operations, Richland, Washington.

4-29. ARH-1600, April 5, 1974, Specification and Standards for Waste Processing and Encapsulation Plant, L. M. Knight, Atlantic Richfield Hanford Company, Richland, Washington.

4-30. RHO-CD-861, November 1979, B Plant and WESF Sample Schedule, L. L. Lin, Rockwell Hanford Operations, Richland, Washington.

4-31. DOE/EV/1830-T5, April 1980, A Guide to Reducing Radiation Exposure to As Low As Reasonably Achievable (ALARA), prepared by the staff of the Occupational and Environmental Protection Department, Pacific Northwest Laboratory, Richland, Washington, Contract EX-76-C-06-1830.

4-32. DOE-RL 5820.2, July 26, 1979, Radioactive Waste Management, U.S. Department of Energy-Richland Operations Office, Richland, Washington.

4-33. RHO-MA-222, May 1980, Hanford Radioactive Solid Waste Packaging, Storage, and Disposal Requirements, Rockwell Hanford Operations, Richland, Washington.

4-34. RHO-MA-201, November 1978, Material Packaging, Shipping and Transportation, Rockwell Hanford Operations, Richland, Washington.

4-35. SD-432-CDR-001, September 1982, Conceptual Design Report Exhaust Stack Upgrade, B Plant Project B-432, Kaiser Engineers Hanford Company, Richland, Washington.

4-36. SD-356-CDR-001, March 1982, Conceptual Design Report, Chemical Sewer Upgrade - B Plant Project B-356, Kaiser Engineers Hanford Company, Richland, Washington.

4-37. SD-WM-SAR-001, August 1983, Hazards Identification and Evaluation for the Upgrade of 200 Areas Stacks with the Generic Sampler - Monitor System, by T. J. Higgins, Safety Analysis Group, Health, Safety and Environment, Rockwell Hanford Operations, Richland, Washington.

4-38. SD-RE-ER-004, July 14, 1982, Liquid Effluent Sampler Monitor Upgrade Plan, K. W. Owens, Rockwell Hanford Operations, Richland, Washington.

4-39. RHO-CD-1503, October 27, 1981, Analysis and Assessment of 200 Areas Liquid Effluent Sampling and Monitoring Systems, M. M. McCarthy and K. W. Owens, Rockwell Hanford Operations, Richland, Washington.

4-40. DOE Order 5480.1A, August 1981, "Environmental Protection," Safety and Health Protection Program for DOE Operations, Chapter XI, Requirements for Radiation Protection, U.S. Department of Energy, Washington, D.C.

4-41. RHO-MA-220 REV 1, February 1983, Radiological Standards and Operational Controls, Radiological Engineering, Rockwell Hanford Operations, Richland, Washington.

4-42. RHO-MA-278, June 1985, ALARA Program, Rockwell Hanford Operations, Richland, Washington.

4-43. RHO-LD-179-2, September 1982, Facility ALARA Plan for B Plant, Radiological Engineering Group, Rockwell Hanford Operations, Richland, Washington.

4-44. RHO-MA-172, April 1983, Radiation Work Permits, Radiation Monitoring Group, Rockwell Hanford Operations, Richland, Washington.

4-45. DOE Order 6430.1, December 12, 1983, General Design Criteria for Department of Energy Facilities, U.S. Department of Energy, Washington, D.C.

4-46. RHO-MA-115, January 25, 1982, "Engineering Procedure Manual," Section 2-8.1, Operations Safety Requirements, Rockwell Hanford Operations, Richland, Washington.

4-47. DOE Order 5480.1, May 5, 1982, "Environmental Protection Program for Richland Operations," Chapter V, Safety of Nuclear Facilities, U.S. Department of Energy, Richland, Washington.

4-48. DOE-RL Order 5700.1A, Quality Assurance, July 14, 1983, U.S. Department of Energy, Richland, Washington.



9312891805

4-49. ERDA MC 0820, December 12, 1973, Quality Assurance, U.S. Department of Energy, Richland, Washington.

4-50. RHO-CD-863, September 30, 1981, Quality Assurance Program Plan - Waste Fractionization and Encapsulation, E. F. Serabia, Rockwell Hanford Operations, Richland, Washington.

4-51. SD-RE-DRR-344, May 9, 1984, Design Review Report for (296-B-13) Stack Monitor Installation and Stack Probe Drawings, T. R. Martin, Rockwell Hanford Operations, Richland, Washington.

This Page Intentionally Left Blank.

9 3 1 3 0 0 1 6 0 7

# 5.0 FACILITY DESCRIPTION

## 5.1 SUMMARY DESCRIPTION

This chapter provides a description of the B Plant buildings and related facilities. The design features discussed include those employed to:

- Withstand natural forces
- Ensure safe operation
- Provide personnel safety
- Ensure radiological protection.

B Plant was designed to chemically process spent nuclear fuels. Radiological containment and confinement features were incorporated in the various facilities and support systems to prevent exposure of plant personnel and the general public to excessive radiation. After plant production was terminated, the plant was modified to provide for separation and purification of selected fission products.

### 5.1.1 Site Location and Facility Layout

The Hanford Site is located in the southeastern part of the State of Washington (Fig. 3-1) about 45 mi north of the Oregon border. The site occupies about 570 $mi^2$ (365,000 acres) of arid land.

In the middle of the Hanford Site, on an arid terrace about 7 mi from the Columbia River, are the 200 East and 200 West Areas, where fuel and waste processing and waste storage facilities are located. The locations of the 200 Areas were chosen to provide the most isolation from the site boundaries and are the most remote from both surface and subsurface water. The groundwater table varies from 150 to 300 ft below the surface of the 200 Areas.

Other occupied portions of the Hanford Site include the 100 Areas along the Columbia River, where the production reactors are located; the 300 Area north of Richland, where the research and development laboratories and fuel production facilities are located; the 400 Area, or Fast Flux Test Facility (FFTF) site, about 7 mi northwest of the 300 Area; and the sites of the nuclear power reactors about 2 mi north of the 400 Area.

The area of the Hanford Site not included as one of the 100, 200, 300, or 400 Areas is designated the 600 Area. The support areas are shown in Figure 3-2. Each area, except the 600 Area, operates as an individual, fenced, and controlled limited access area.

The B Plant is a complex of several buildings and support facilities located within the 200 East Area (Table 5-1, Fig. 5-1). Details of the roadways, railways, and associated facilities are given in Chapter 3.0.

The canyon deck elevation is 711 ft 6 in. above mean sea level (MSL). It is 303 ft above the underlying water table at 408 ft MSL, and 253 ft above the elevation of the Columbia River at 458 ft MSL. The river makes its closest approach 7 mi to the northwest of the plant site.

Truck transportation to and from B Plant is provided via the Hanford Site highway system connecting the state highways at three portals on the southeast, south, and west boundaries.

The Hanford railroad system provides rail transport directly into the main processing (canyon) building and connects to other areas within the site. Commercial railroad connections are with Burlington Northern and Union Pacific through the south portal at North Richland.

### 5.1.2 Principal Features

Site Boundary. The general location of B Plant on the Hanford Site is shown in Figure 3-2. The plant is located within the southeastern corner of the approximately 2,125 acre fenced 200 East Area.

The plant site is managed as a limited area within the 200 East Area, which itself has limited access as a U.S. Department of Energy (DOE) security area. Security guards man the two entrances to the Hanford Site (two paved roads, one to the west at the Yakima Barricade and one to the south at the Wye Barricade). Only appropriately cleared personnel, or escorted tours with a need to enter either the 200 or the 100 areas, are permitted to enter.

Limited Area. The definition of "limited area" (Ref. 5-3) is a security area in which guards or other internal controls can prevent access by unauthorized persons to classified material. This includes denial or removal of personnel and property from the area. In the above sense, the 200 East Area (security area) and the Hanford Site (controlled area) are each considered a limited area.

Controlled Area. The plant site is a controlled area. This is achieved not only by control of access, but also through personnel training, procedures, regulations, management practices, and radiation monitoring systems and devices. Since only persons with appropriate clearance are passed through the Wye and Yakima Barricades, the greater part of the entire Hanford Site is also a controlled area.

TABLE 5-1. Specific Buildings Covered Within the 221-B Waste Fractionization Area.

| | | |
|---|---|---|
| 1. | 207-B Area | Retention ponds |
| 2. | 211-B Area | Chemical Makeup Tank Farm |
| 3. | 212-B Building | B Plant Cask Loading Station (in and out) |
| 4. | 216-B Area | Cribs<br>• 216-B-2, 216-B-3 cooling water and 216-B-63 chemical sewer<br>• 216-B-62 221-B process condensate<br>• 216-B-55 221-B steam condensate |
| 5. | 217-B Building | Demineralized Water Facility |
| 6. | 221-B Building | B Plant Canyon<br>• Separation, concentration, purification and storage of selected FPs<br>• Waste handling<br>• Solvent extraction |
| 7. | 221-BA Building | Sampler and monitoring |
| 8. | 221-BB Building | Process and steam condensate |
| 9. | 221-BC Building | R-13 SWP Change House and dumbwaiter |
| 10. | 221-BD Building | Laundry storage |
| 11. | 221-BE Building | Fork Lift storage |
| 12. | 221-BF Building | Diversion Facility for BCP condensate |
| 13. | 271-B Building | B Plant services<br>Offices<br>Aqueous makeup of process chemicals<br>Instrument maintenance shops<br>Cold side ventilation equipment |
| 14. | 271-BA Building | Laundry storage |
| 15. | 272-B Building | Electrical Maintenance Building |
| 16. | 272-BA Building | Maintenance Shop |
| 17. | 272-BB Building | Insulation Shop |
| 18. | 276-B Building | Organic storage and makeup |
| 19. | 282-B Building | Pump house |
| 20. | 282-BA Building | Pump house |
| 21. | 291-B Building | Exhaust fan control house, stack and sand filter ventilation and vessel vent exhaust fans for process building; emergency steam turbine fan |
| 22. | 291-BA Building | Exhaust Air Sample House |
| 23. | 291-BB Building | Exhaust Air Instrument House |
| 24. | 291-BC Building | Exhaust Air Instrument House |
| 25. | 291-BD Building | Exhaust Air Third Filter Cell and Instrument House |
| 26. | 291-BF Building | Exhaust Air Fourth Filter Cell and Instrument House |
| 27. | 292-B Building | Stack monitoring |
| 28. | 2711-B Building | Breathing Air Compressor House |
| 29. | 2615-B Building | Oil storage |
| 30. | 2716-B Building | Railroad Cut Change House |
| 31. | 2904-EA Building | Chemical sewer monitoring |

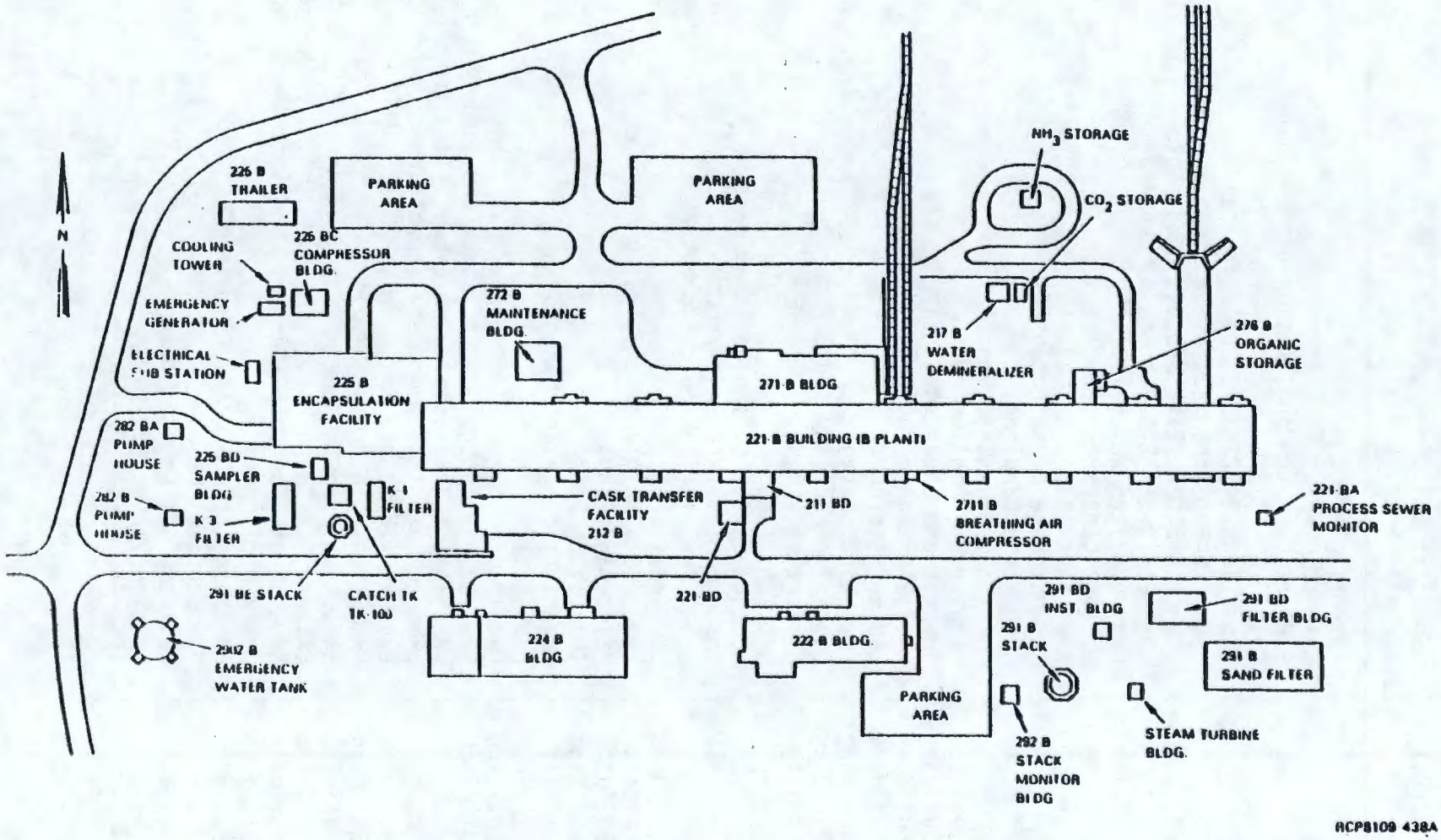


FIGURE 5-1. Relative Locations of Waste Fractionization, Encapsulation, and Auxiliary Facilities.

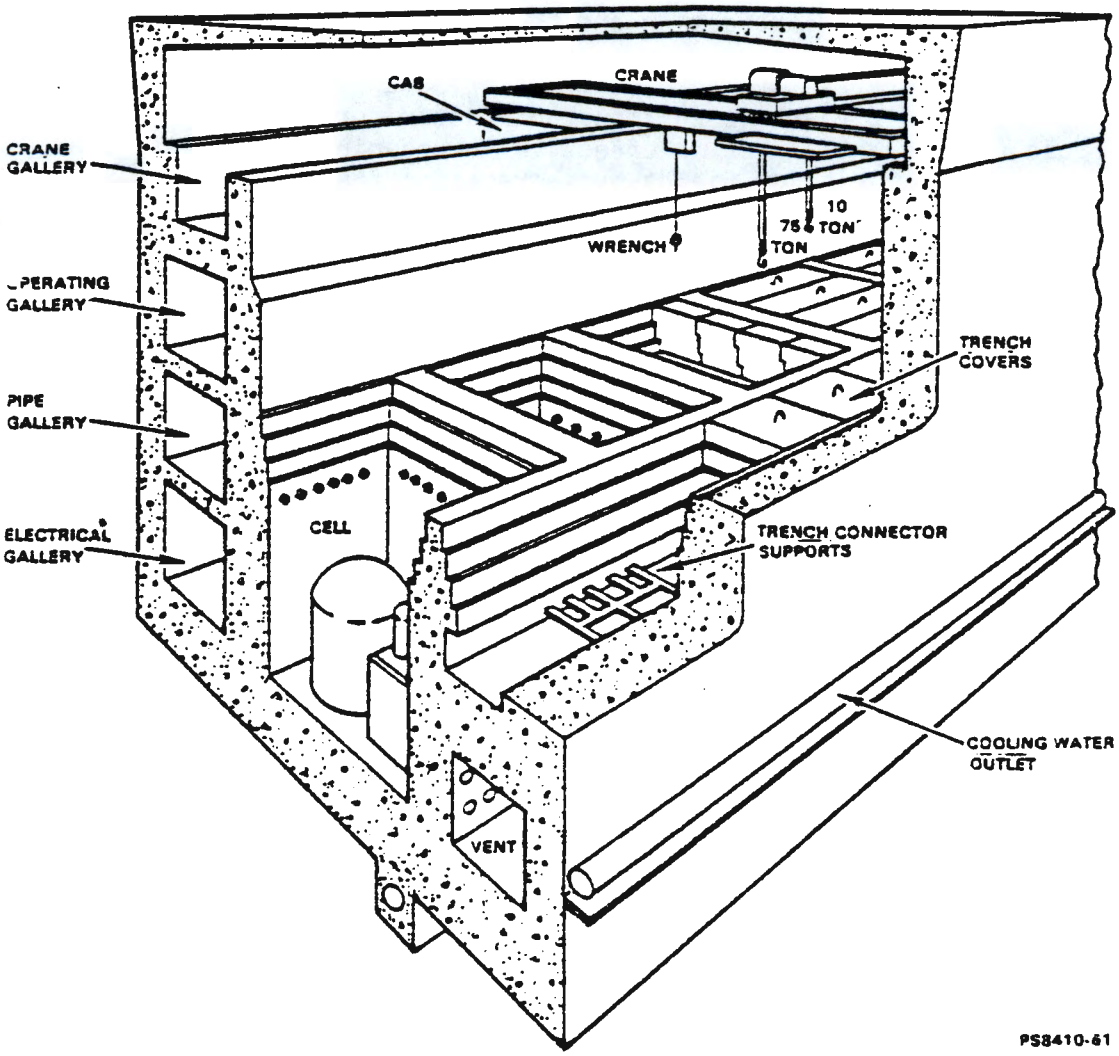


FIGURE 5-2. Cutaway of 221-B

## 5.2 CONFINEMENT SYSTEMS

This section describes the design of physical containment barriers and their associated systems which are referred to herein as confinement systems. The confinement systems are designed to prevent or mitigate the effects of an uncontrolled release of radioactive material such that onsite and offsite doses and effluent concentrations are maintained within recommended guidelines (Ref. 5-4) during all facility operations.

The concept of the B Plant design and operating procedures is to combine high-level contamination through the use of multiple confinement barriers between the sources of radioactive material and the environment. The building layout of B Plant is an important factor for controlling personnel dose. The plant layout is effective in reducing casual and transient exposure to radiation fields by segregating the areas alloted to nonradiation work from the areas of high radiation. Occupational doses to workers is limited to those areas where the performance of an assigned task requires radiation exposure.

A system of sequential zones is delineated to formulate the confinement concept of the facility (Ref. 5-5). Two major types of zones that are included in any facility processing radioactive material are uncontrolled access and controlled access areas. Uncontrolled access areas include any area where direct radiation exposure is not necessary for job performance. Controlled access areas include various building zones in which individuals may be subject to higher radiation than that received by nonradiation workers.

## 5.3 SECONDARY CONTAINMENT BARRIER

### 5.3.1 221-B Canyon Structure and 271-B Services Building

The design of the waste fractionization process facility provides for all of the processing operations to be performed within the 221-B Building (Fig. 5-2). The 271-B Building is an annex attached to the north side of the canyon. These buildings form two major zones, namely, the uncontrolled access (271-B) and the controlled (221-B) access areas.

5.3.1.1 Uncontrolled Access Area. The 271-B Building is an area of unrestricted access which includes building services such as conference rooms, file rooms, clerical and other support offices, lunchroom, locker rooms, showers, and restrooms. The aqueous make up area and the dispatcher's office, vital to the support and control of the processing and monitoring operation performed in the 221-B Canyon, are located in the 271-B Building.

5.3.1.2 Controlled Access Area. The 221-B Canyon is a controlled access area which contains the buffer and the radiation areas.

- Buffer Area--This area consists of the service portion of the building which includes the operating, pipe, and electrical galleries and the SWP lobby at the east end of the operating gallery.

- Radiation Area--This is the regulated work area which consists of areas where limited contact of personnel with radiation and radioactive contamination is allowed under carefully prescribed and monitored conditions. The canyon, the canyon crane gallery, and the railroad tunnel are regulated work areas.

### 5.3.2 271-B Services Building Facility Description

The 271-B Building (Fig. 5-3), consisting of a basement and three floors, is a reinforced concrete and cement block structure 160 ft long, 48 ft wide, and 60 ft high. This building is attached to the north-center gallery side of the canyon.

The basement contains the building maintenance and instrument shops, process air compressor room, filters for the building ventilation air supply, and electrical distribution panels for the 271-B Building.

The first floor provides space for offices, a locker room, and restrooms. Also located on the east end of the first floor are sodium bicarbonate and sodium bisulfate makeup tanks. The second floor contains administrative and supervisory offices, lunch room, and the dispatcher's facilities.

The third floor contains the bulk of the chemical make up head tanks, space for dry chemical storage, a simple chemical control laboratory, and the portable breathing air compressor. At the east end of the building is located an elevator. Approximately at the center of the 271-B Building adjacent to the canyon is a stairway to the roof of the 271-B and 221-B Buildings. There are three doors to the outside on the ground level and two doors on each of the four floors to the corresponding floor levels of the 221-B Building.

### 5.3.3 221-B Canyon Structure Facility Description

The waste fractionization facility, a predominantly reinforced concrete and steel structure, is divided into twenty sections with transverse section joints provided at approximately 40 ft intervals with the exception of sections one, two, and twenty. The transverse expansion joints for sections one, two, and twenty are spaced at 44 ft, 43 ft, and 44 ft 6 in., respectively. All expansion joints are keyed and offset to ensure necessary shielding requirements.

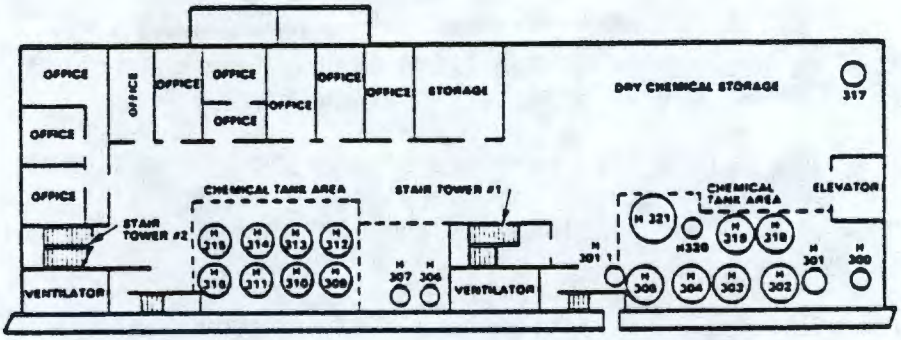


271-B THIRD FLOOR PLAN

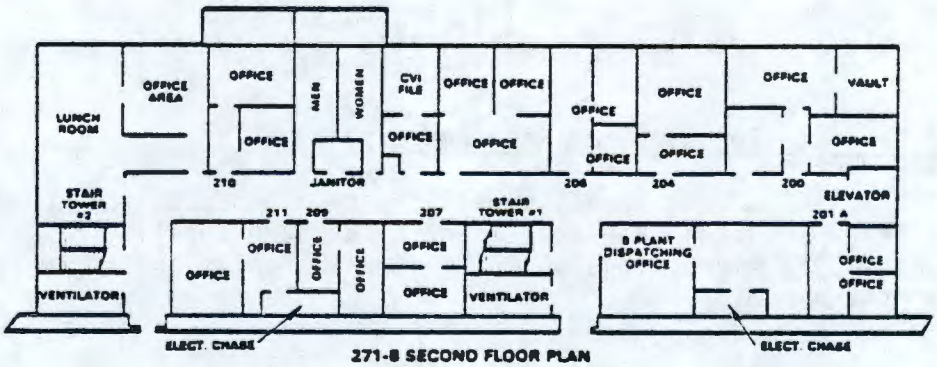


271-B SECOND FLOOR PLAN

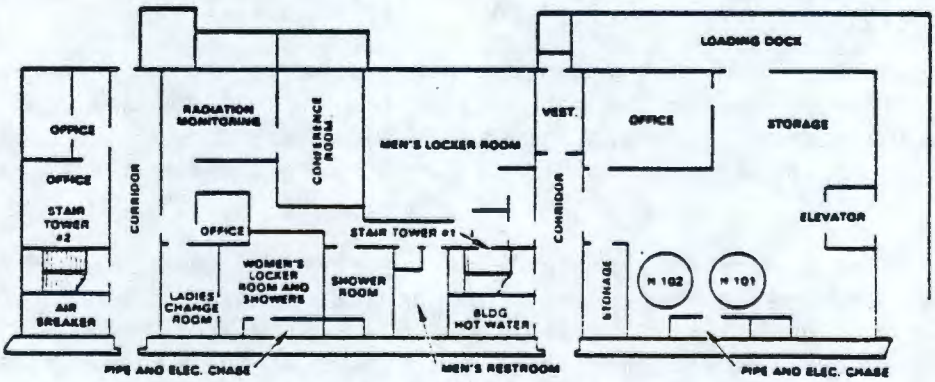


271-B FIRST FLOOR PLAN

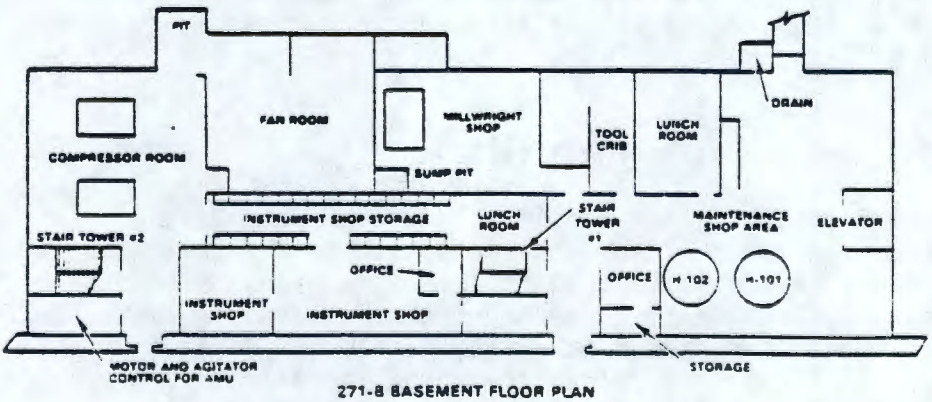


271-B BASEMENT FLOOR PLAN

FIGURE 5-3. Floor Plans of the 271-B Service Building.

The overall length of the canyon is 810.5 ft, and the building is supported on a 6-ft-thick concrete slab. The canyon is 77 ft 2 in. high with partial embedments of 22.5 ft and 16 ft on the south and north side, respectively. The cross-sectional width of 66 ft 2 in. is constant to a height of 59.75 ft and then increases to a maximum of 68 ft 2 in. at the roof top. The roof slab is of varying thicknesses from 3 ft at midspan to 4 ft at the edges where it is supported by the exterior walls.

As depicted in the transverse cross section of the building (Fig. 5-4, 5-5, and 5-6), there are two interior longitudinal walls. The north exterior and interior walls support the concrete slabs for the operating, pipe, and electrical galleries. The south exterior and interior walls support the slab of the air tunnel. The cells between the two interior walls and the hot pipe trench are covered with removable concrete blocks. There is a 75-ton-capacity overhead bridge crane that spans the total width of the building.

The canyon is comprised of cells, hot pipe trench, air tunnel, the crane cab gallery, the service area, and the operating, pipe, and electrical galleries.

5.3.3.1 Cells. The cells provide segregation of the highly contaminated process vessels and equipment, and provide controlled access and storage space of waste and spare parts. There are forty cells, two cells per section, arranged in a single row running the length of the building. The canyon air samplers are located at Cells 8, 21, and 37 in the operating gallery and will alarm if the contamination level of the canyon air exceeds the specified maximum. These cells can be categorized as process and nonprocess cells.

5.3.3.1.1 Process Cells. Cells 5 through 14 and 17 through 39, except for Cell 10, are standard canyon cells 17 ft 8 in. long, 13 ft wide, and 22 ft deep. Cell 10 is 48 ft deep. Each cell is separated from the adjacent cell by a 7-ft-thick concrete wall. Representative standard cell sections are illustrated in Figures 5-7 and 5-8.

5.3.3.1.2 Nonprocess Cells (Fig. 5-7). Cells 1 through 4, 15, 16, and 40 are utilized for controlled access and storage space for radioactive waste and failed parts. Cells 1 and 2, with no partition, form a single cell 33 ft 6 in. wide, 35 ft 2 in. long, and 26 ft deep with space, for spare parts.

- Cell 3, (Fig. 5-8) 16 ft wide, 56 ft 6 in. long, and 24 ft 10 in. deep, is the railroad tunnel cell. There is a 16-ft by 24-ft motor-operated rolling steel door at the end of a 174 ft railroad tunnel attached to the north end of the cell. The cell has a steel sliding cover instead of a cell block. The railroad tunnel is used routinely in the transfer of packaged containers from 221-B to a railroad cask car for movement to the burial area. The tunnel is also used during non-routine transfer of process equipment to and from the 221-B Canyon.

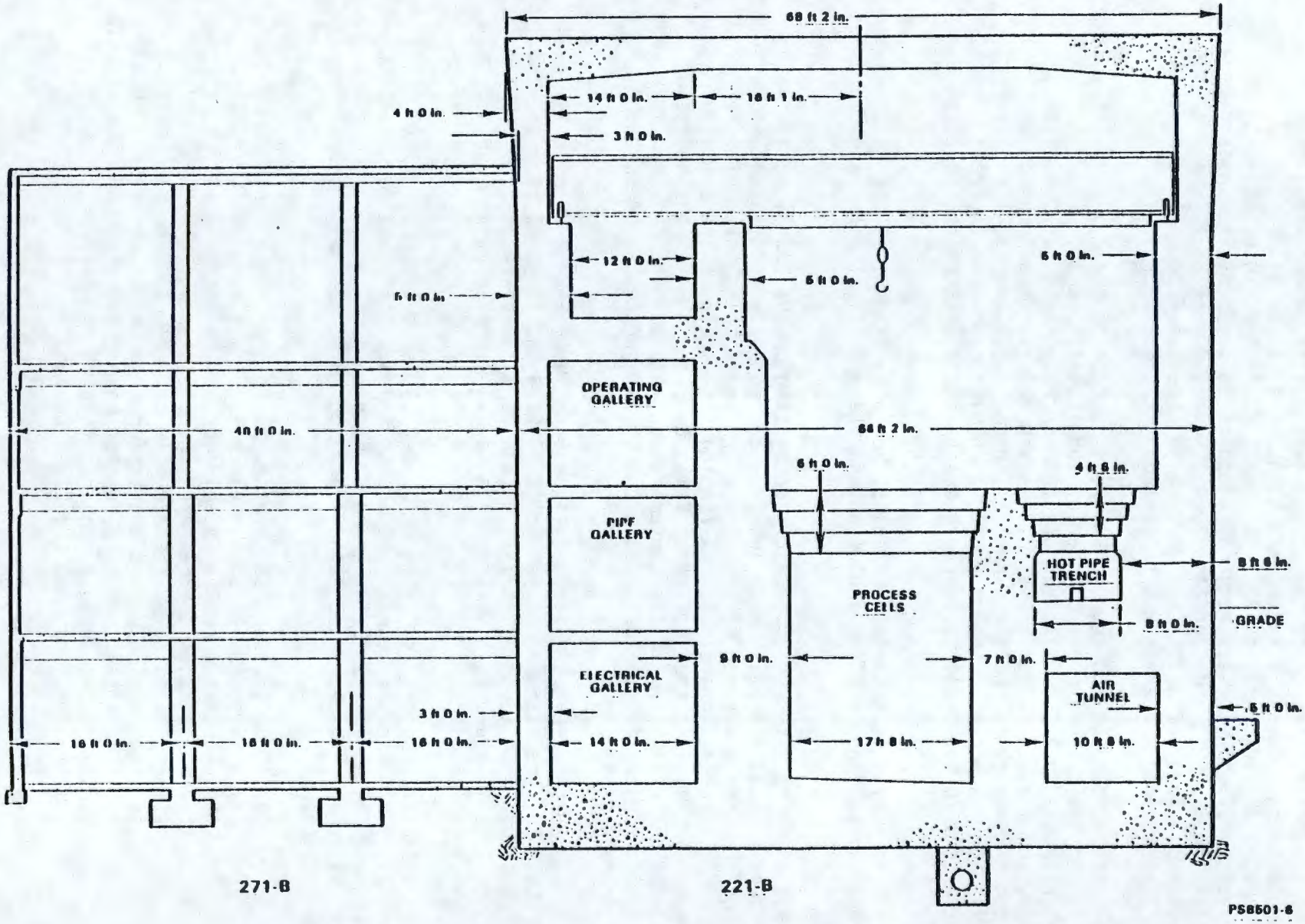


FIGURE 5-4. Typical Cross-Section of 271-B Service Building and 221-B Canyon Structure.

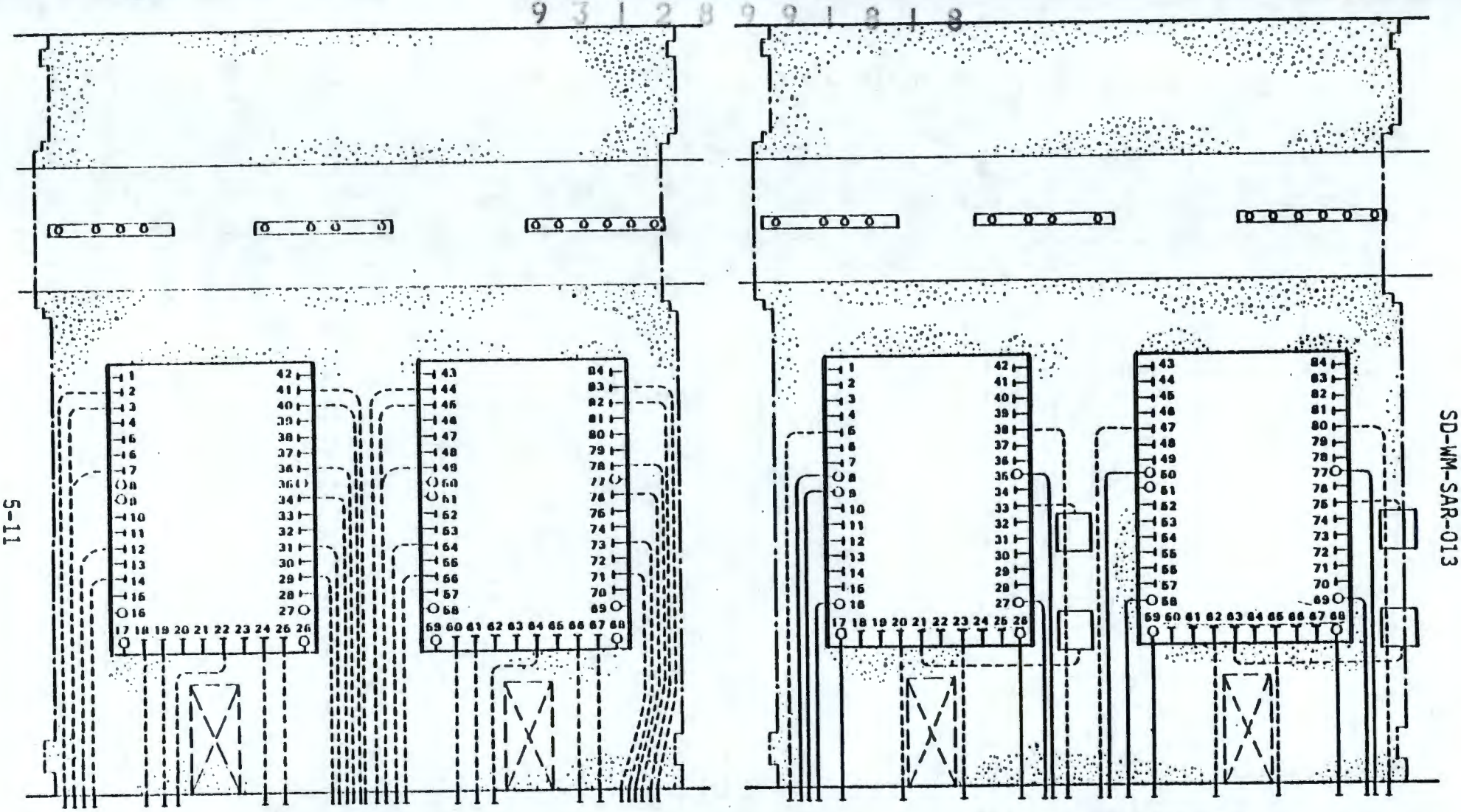


FIGURE 5-5. Process Cell Sections (Standard, Electrical, and Instrument Lines).

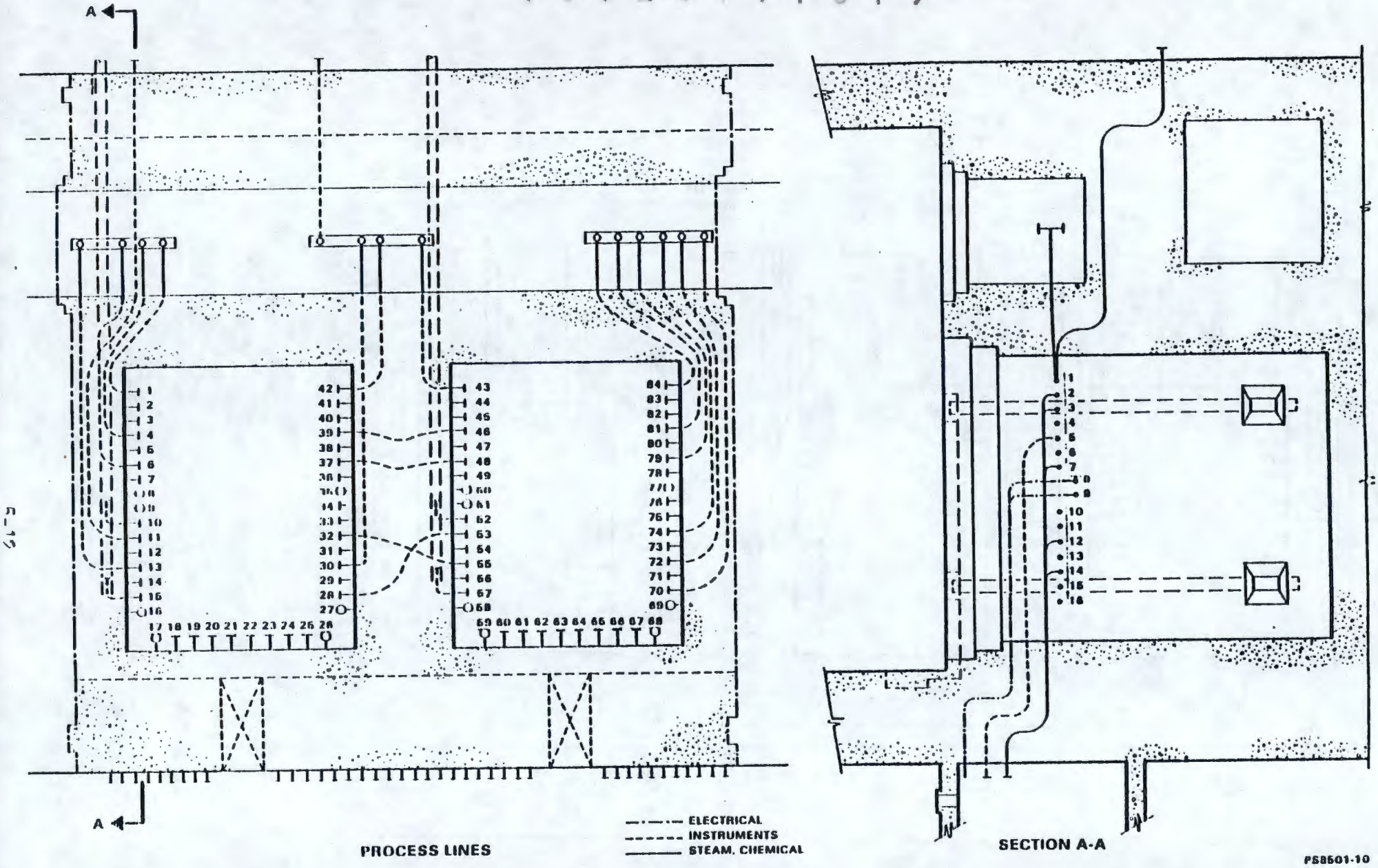


FIGURE 5-6. Process Cell Sections (Process and Utilities, Electrical, Instrument, Steam and Chemical).

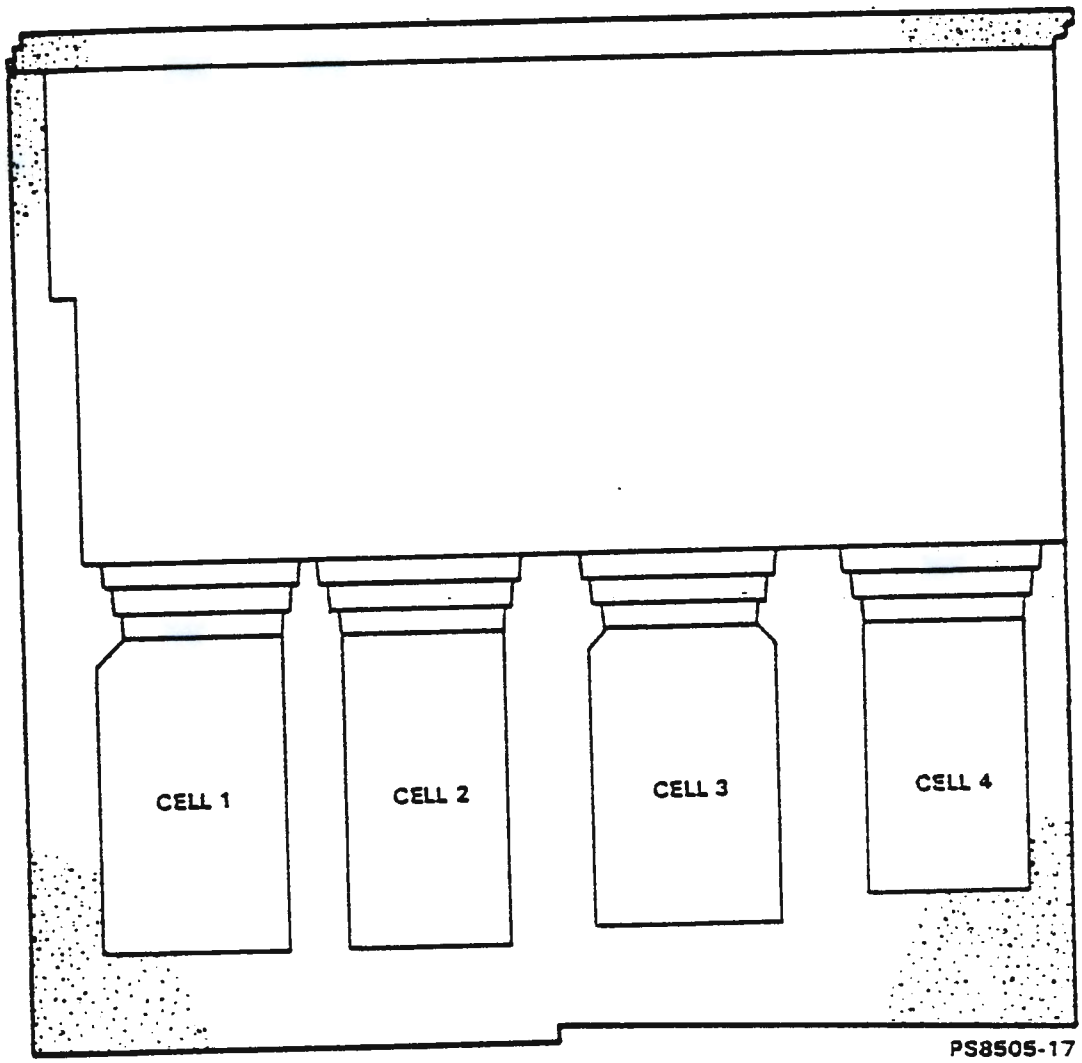


FIGURE 5-7. Nonprocess Sections Cells 1, 2, 3, and 4.

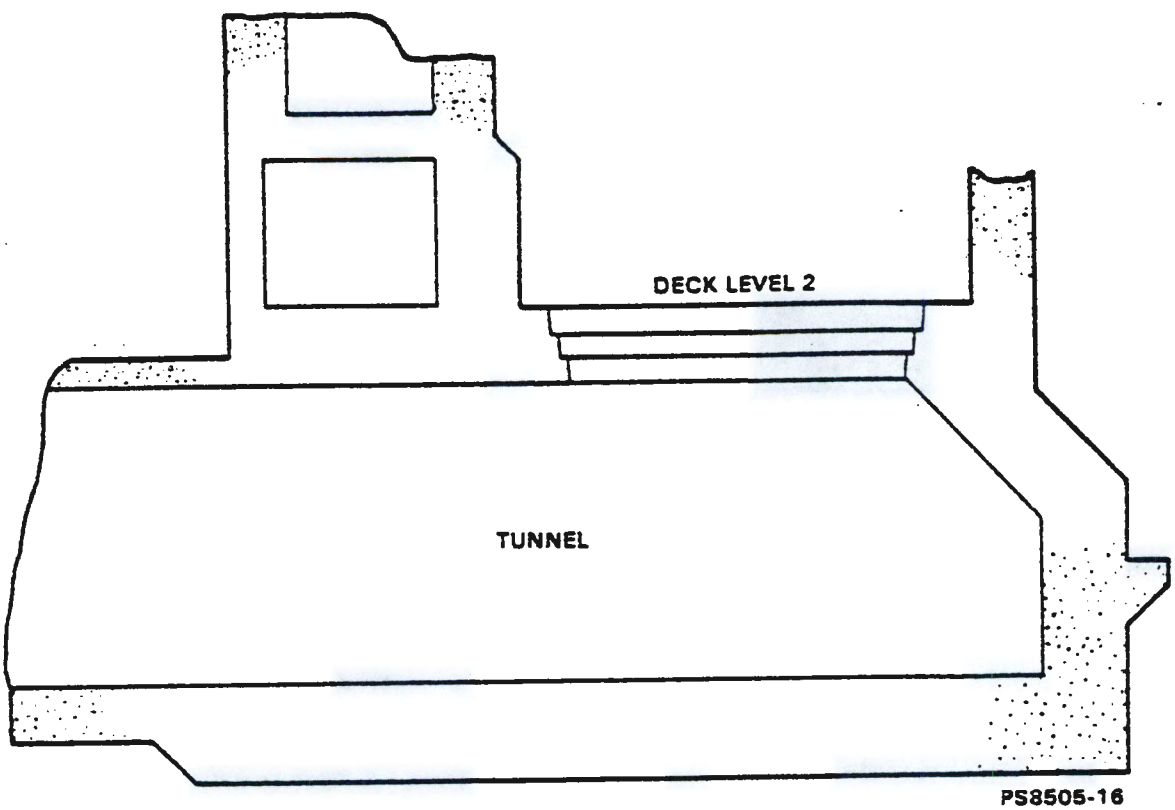


FIGURE 5-8. Nonprocess Cell 3, Railroad Tunnel.

- Cell 4 (Fig. 5-9) is used for interim storage of contaminated waste generated in 225-B. The 55-gal standard drums containing contaminated waste are placed in casks and transported to the 221-B tunnel on a truck. The cask is lifted from the truck by the overhead canyon crane and placed on the Cell 6 deck. The drums are set on removable racks made with grating floors. A maximum of 295 drums can be stored in the cell.

- Cell 40 (Fig. 5-10) provides a shielded sample cave for obtaining high-activity-level samples from the Cell 38 and 39 process vessels. Samples from TK-38-1, TK-38-3, TK-38-8, TK-39-4, and TK-39-5 can be taken via the sample cave.

  Personnel access from 225-B to the Cell 40 sample cave is provided by a 3-ft 6-in.-wide by 7-ft 2-in.-high by 7-ft-deep passageway located at the southwest corner of Cell 40.

  The Cell 40 cover blocks have been replaced with 1/4-in.-thick steel plate. Flooring is provided at an elevation of about 17 ft above the original concrete floor of the cell and consists of 3/8-in.-thick nonskid steel plate over 1 1/2-in. steel grating. Elevation of the flooring results in an overall height from floor to ceiling of 10 ft 9 in.

  The sample cave is located in the extreme southeast corner of Cell 40. The sample cave is constructed of reinforced, high-density concrete with 1 1/2-ft thick walls and a floor 2-ft 4 1/2-in.-thick. The cave is provided with a single cover block of 2-ft 3-in.-thick reinforced concrete. Overall inside dimensions of the sample cave are 5 1/2 ft by 4 1/2 ft by 6 1/4 ft from the floor to bottom of the cover block. The inner walls of the cave are lined with Type 304 stainless steel. The cave floor is sloped to a center 2-in. drain. The north wall of the cave contains a lead-glass viewing window approximately 4 ft wide by 3 ft high.

  The sample cave floor contains a 2-in. stainless steel drain with a 6-in. trap just below the drain opening. The drain continues into Cell 39 where a jumper connection which has an additional 18-in. trap is made to the low-level waste tank, TK-39-1. Piping in the Cell 40 sample cave was designed to be maintained by remote manipulator. Piping in the cave consists of 1/2-in. or smaller stainless steel tubing fastened by Swagelok tube fittings. On/off control is provided by ball valves either manually or pneumatically actuated. Sample jets are air operated.

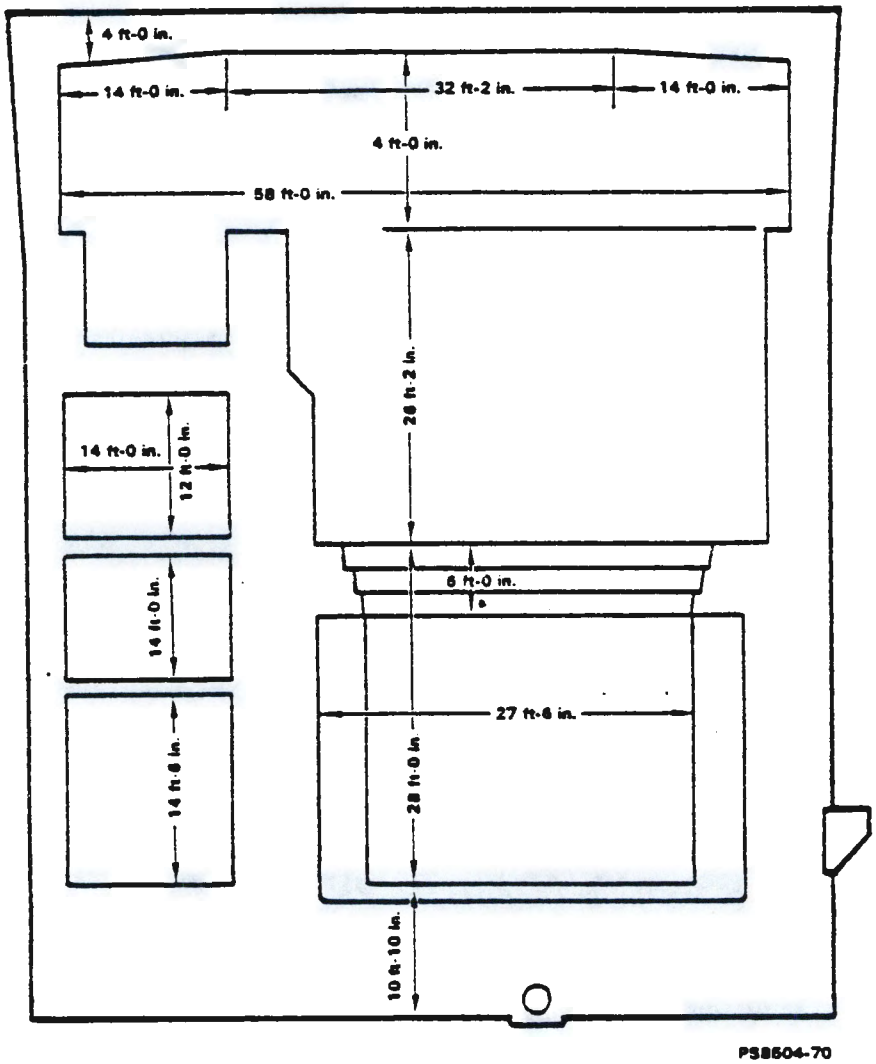


FIGURE 5-9. Nonprocess Cell 4, Waste Encapsulation and Storage Facility Solid Waste Drum Interim Storage.

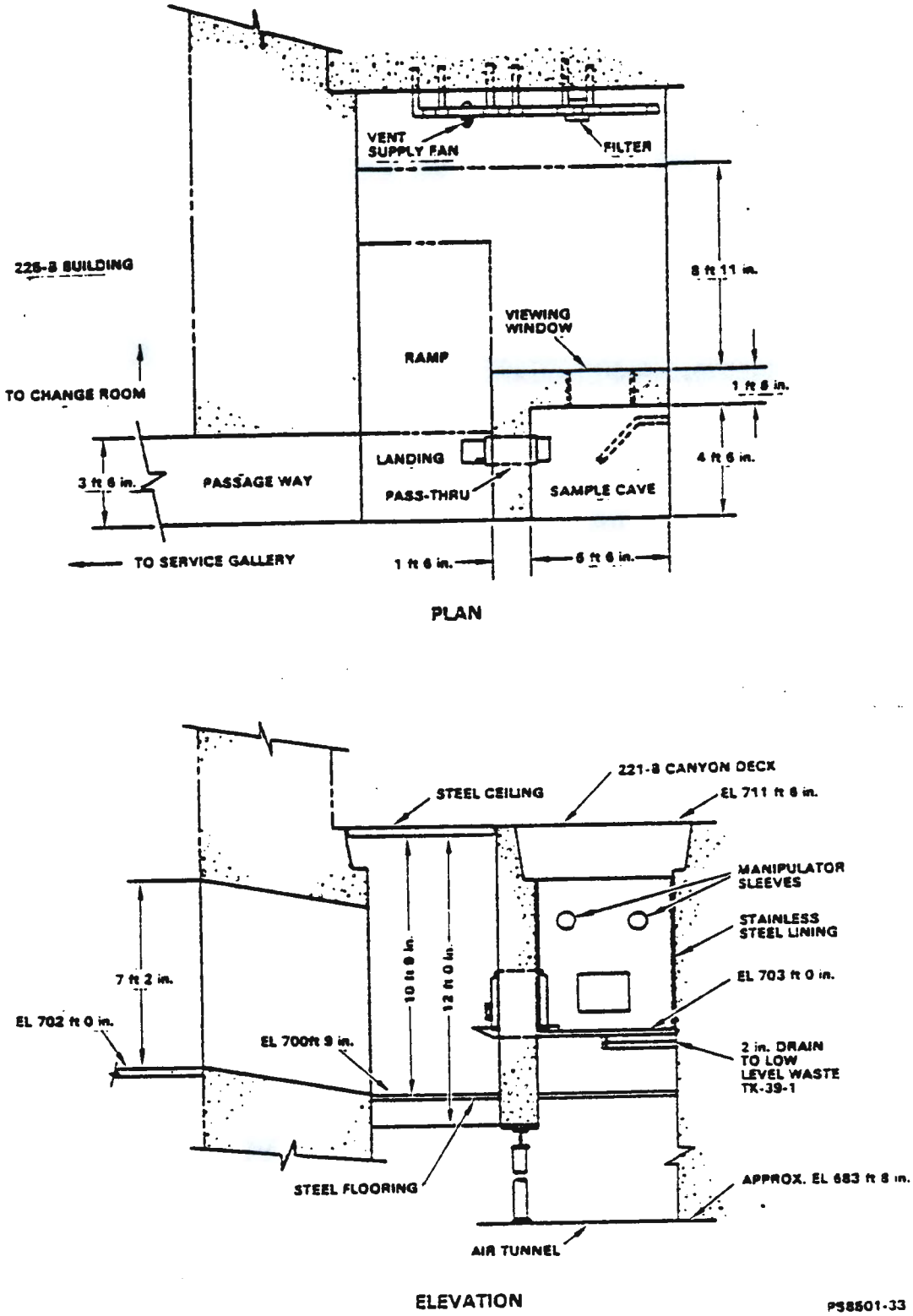


FIGURE 5-10. Nonprocess Cell 40, Sample Cave.

Sampling operations are performed in the sample cave with the aid of a master-slave mechanical manipulator. The manipulator with load hook accessory is capable of lifting a load of 100 lb. Manipulator arms are spaced 2 ft 9 in. apart and are electrically extended and positioned in all three directions from a 110 V, 60 Hz, single-phase power supply. Each manipulator can be removed from the cave via a track mounted on the ceiling of Cell 40. The manipulator can then be removed from Cell 40 via the passageway to the 225-B Building.

Ventilation exhaust for the sample cave (about 100 $ft^3$/min) is provided by a 4-in. pipe duct leading from the sample cave to the 221-B air tunnel. Air supply is from the 221-B Canyon via in-leakage around the cover block. Air flow is controlled by a manually operated exhaust damper. Ventilation supply for Cell 40 is provided by a 130-$ft^3$/min fan (5 in. water static pressure) located in Cell 40. The supply air enters Cell 40 from the 221-B Pipe Gallery through a 12 in. by 12 in. by 12 in. HEPA filter and plastic pipe ducts. Cell 40 air exhausts through a 24 in. by 24 in. by 11 1/2 in. HEPA filter into the 221-B air tunnel.

5.3.3.1.3 Service Pipe Lines. Original pipe lines servicing the cells (Fig. 5-5 and 5-6) are buried in concrete and terminate in a row of connector nozzles on the cell wall 9 ft below canyon deck level. Other nozzles have been added at other elevations. The elevation of the canyon deck is 711 ft 6 in., and the cell nozzles are located at elevation 702 ft 2 in. Equipment is placed on the cell floor and held in position by guides built into the cell, establishing a standard relationship between the wall connector nozzles and the vessels. This arrangement makes possible the prefabrication of replacement vessels, jumpers, and other equipment for any given location in the cell.

5.3.3.1.4 Cell Cover Block. The cell cover blocks form the movable confinement barrier of the cells and the hot pipe trench. During normal operation of the plant, the 6-ft-thick concrete cell cover blocks serve as shielding barriers from high-intensity radiation emanating from the process equipment and provide passage of ventilation air in the direction of the cells, thus preventing escape of airborne radioactive contamination from the cells to the canyon deck. These blocks are constructed of a proper size and uniformity so that the gap on the stepped interlocking edges, horizontal or vertical, cannot exceed 1 in. maximum nor be less than 1/8 in. minimum when the blocks are placed in any possible position. This clearance provides ease of insertion and removal of cell blocks during maintenance and removal of equipment.

Cells 5, 20, and 23 have cover blocks which are 3 ft thick to allow adequate clearance for the in-cell equipment. These blocks are structurally equivalent to the other blocks and are painted red along the borders to allow easy identification.

5.3.3.1.5 Safety Considerations During Cell Work. High dose rates are possible in the 221-B Canyon when cell blocks are removed from active cells and highly contaminated air concentrations are feasible during an air flow reversal. Potential for spread of contamination exists during movement of radioactive equipment. No entry to the canyon deck is permitted until all stipulations of pertinent procedures and safety rules are met.

Cell maintenance work is controlled through a job plan providing guidance for removal and installation of equipment, and listing the jumpers and equipment by cell identification and storage instructions.

Deficiencies during operational tests of the crane are promptly reported to operations supervision, documented, and filed in the crane information file. No more than two cells are normally opened at any time. Specific supervision approval is required to exceed the stipulated opening of cells. This requires close attention to the operation and control of canyon air flows for proper confinement of contamination. Up to eight cover blocks may be removed and stored at locations determined by the crane operator (Ref. 5-6). If more than eight blocks are stored at the same time, the block storage plan will be in the crane plan. The crane operator will notify the shift manager where the blocks are stored. No cell or hot pipe trench cover blocks are stacked unless the stacking operation is covered by a specific procedure.

5.3.3.2 Hot Pipe Trench (Fig. 5-11). The hot pipe trench, parallel to the process cells from Cell 5 through Cell 40, provides the isolation and shielding of contaminated piping for inter-cell solution transfer and vessel venting systems. The trench is approximately 8 ft wide and 10 ft 6 in. deep, measured from the canyon deck, and approximately 707.82 ft long and is accessible for remote maintenance after the removal of the 54-in.-thick concrete cover blocks.

Lead shielding barriers exist in the hot pipe trench between Cells 12 and 13. Piping stubs extend through the barrier to permit tie-in for future process flexibility.

Lines from the process cells pass through concrete walls and terminate in connector nozzles in the trench. The piping is prefabricated and attached to the nozzles with connector heads.

5.3.3.3 Cell Drain Header (Fig. 5-12). The cell drain header, a 24-in.-ID vitreous-clay pipe embedded in a minimum of 1 ft of concrete below and on either side, is a route for the collection of solutions from the canyon deck, as well as from cell flushes and leaks from process systems in cells and the pipe trench. The cell drain header starts 33 ft below the deck at each end of the canyon. It has a gradient of 1% and drains into Tank 10-1. The 6-in.-dia. vertical pipes drain any solution from the process cells or pipe trench. The cell drainage waste is routed to either the high- or low-level waste treatment section as dictated by the activity level.

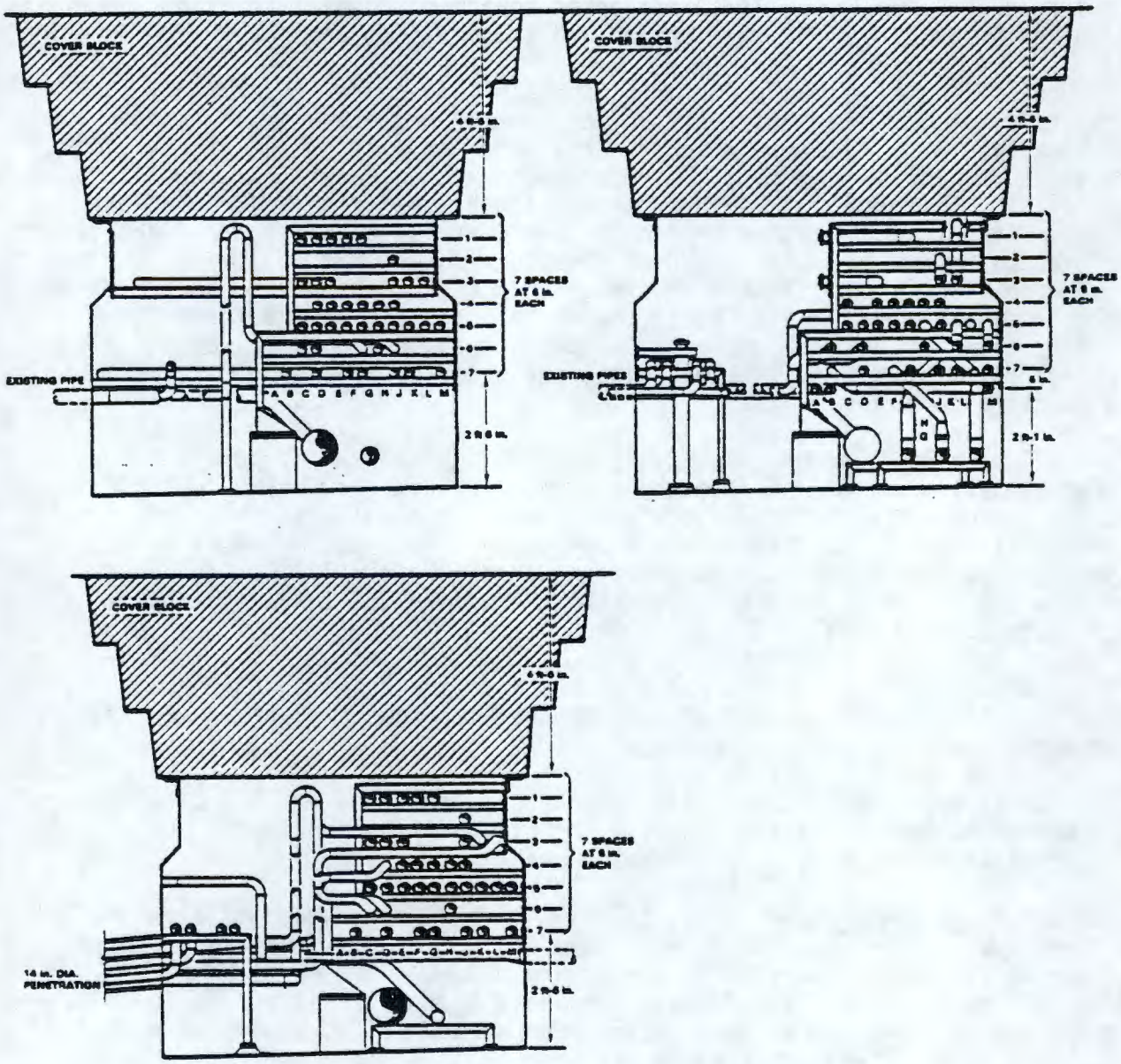


FIGURE 5-11. Hot Pipe Trench Cross-Sections.

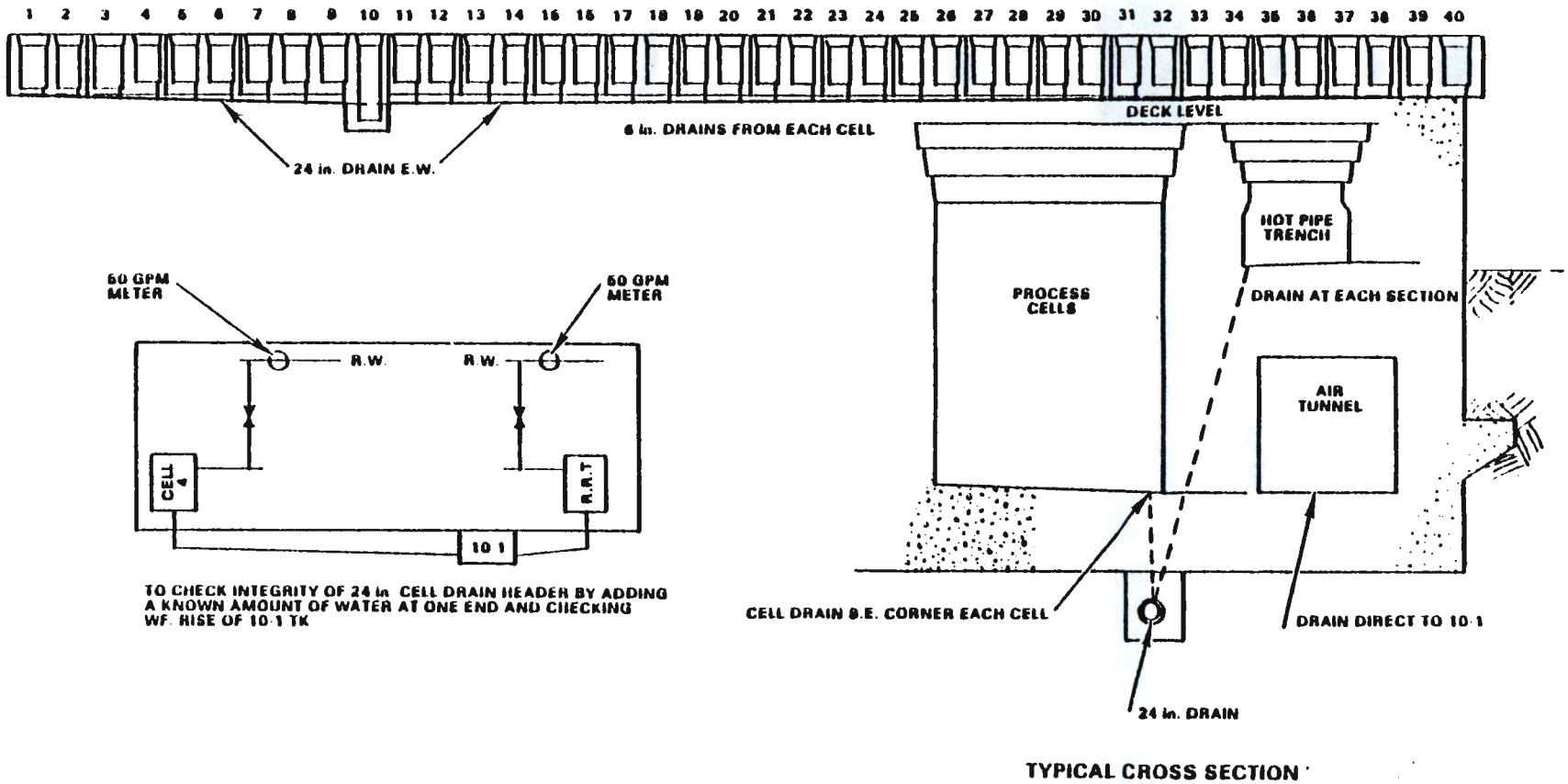


FIGURE 5-12. Cell Drainage Header to Tank 10-1.

Other liquid wastes can be collected by manual valve changes in the railroad tunnel. Liquid from the operating gallery floor drains, scale tank drains, scale tank overflows in the operating gallery, and floor drains in the pipe gallery are collected in a 6-in. stainless-steel header which traverses the length of the electrical gallery. This flow normally exits the building into the chemical process sewer, but can be rerouted as described above.

5.3.3.4 Canyon Crane Cabway and Crane (Fig. 5-4). The canyon volume is approximately 1.56 x $10^6$ $ft^3$, enclosed by the exterior walls of the 221-B Building above the series of forty cells and the hot pipe trench. The canyon provides space for the crane cabway, a flow path for the supply air and a containment volume for the confinement of airborne radioactive contamination from the cells.

The crane cabway is located on the north side of the building above the operating gallery. The cabway is separated from the canyon by a 5-ft-thick and 9-ft 3-in.-high concrete parapet wall. The parapet wall provides shielding from direct gamma radiation for the operators in the cab. Protection from scattered radiation is afforded by the steel structure of the cab. Entry to the cab is through a 3-in.-thick doorway, and HEPA filtered ventilation air is provided through a shielded duct from a blower mounted on the top.

5.3.3.5 Galleries (Fig. 5-4). Parallel to the process cells on the north side, stacked at progressively higher levels, are the electrical, the pipe, and the operating galleries. The galleries are 14-ft-wide tunnels that extend the length of the building from Cell 4 to Cell 40, except for the operating gallery which extends the length of the canyon. The galleries are shielded by the 9-ft-thick (at the cell level) and 7-ft-thick (above the canyon deck level) north interior longitudinal wall.

- Contamination of Pipe Electrical, or Operating Galleries--Entry of radioactive materials into the pipe, electrical or operating galleries is detected automatically by CAM alarms.

5.3.3.6 Air Tunnel and the Exhaust Ventilation Duct. The air tunnel located within the confines of the 221-B Building, and the exhaust ventilation duct, 14 ft 6 in. below the deck level and below grade, form the last containment for the release of potentially contaminated air through a filtration boundary and final dispersal from an elevated stack by the exhaust ventilation system fans.

5.3.3.6.1 Air Tunnel. Located below the hot pipe trench, the air tunnel is the exhaust manifold for air from the process cells, the hot pipe trench, and the 212-B Cask Station. The cross sectional area of the air tunnel is a square measuring 10.5 ft by 10.5 ft. The air tunnel runs parallel to Cells 5 through 40 and is interconnected to the cells by twelve 14-in.-dia. cylindrical holes through a 7-ft-thick partition wall. Six of the holes are located at elevation (-)22 ft 10 in. (relative to canyon deck) and the other six holes are located at elevation (-)21 ft 3 in. except for

Cell 15, where the two sets of six holes are located at elevations (-)14 ft 11 in. and (-)16 ft 6 in. (H-2-32582). Cells 10 and 40 are connected to the air tunnel through a single 14-in. dia.-hole.

Cells 1 through 4 are not connected to the canyon air tunnel but, to the exhaust ventilation duct (Fig. 5-13) by a 10-in. pipe outside the canyon which enters the duct approximately 18 ft below the deck level and 10 in., respectively, away from the wall. There are three exhaust ports, one each for Cells 3 and 4 and one for Cells 1 and 2. These ports are all located 5 ft 6 in. below deck level. The ports for Cells 3 and 4 are located 14 ft 10 in. and 10 ft 3 in., respectively, from the west end of Section 2. The port for Cells 1 and 2 is located 6 ft 9 in. from the west end of Section 1.

5.3.3.6.2 Exhaust Ventilation Duct (Fig. 5-13). The exhaust ventilation duct forms, along with the filter, the final barrier before potentially contaminated air is dispersed to the environment by the exhaust fans through the stack.

The main exhaust duct, 194 ft 6 in. long extends perpendicular to the end of the 221-B Canyon Building, and is comprised of two sections, one 40 ft long and the other 154 ft 6 in. long. Located 17 ft 6 in. below the deck level at the interface with the air tunnel and 2 ft 7 in. off center of Section 3, the first 40 ft of the duct forms an irregular pyramidal trapezoid with a base 6 ft wide and 5 ft deep and merges into the 4-ft wide and 7-ft-deep apex of a regular rectangular 154-ft 6-in. long pyramidal trapezoid with a base 4 ft wide and 7 ft 3 in. deep (W-73544). The two sections have a gradient of 0.015 in./ft and 0.52 in./ft, respectively, extending towards the air tunnel.

The main exhaust duct splits at 123.5 ft north of the canyon leading through the filters and emerges into a 45-ft-long filter exhaust duct, 7 ft deep and 5 ft wide, running parallel to the main duct. The main exhaust and the filter exhaust duct merge into a variable (W-72731) cross section duct that forms the plenum for the inlet to the exhaust fans.

The adjoining plenum of the main exhaust duct is sealed off by two concrete walls. The 48-ft 4-in. long variable cross section duct is 7 ft deep and 6-ft 6-in. wide at the entrance and 4 ft 6 in. deep at the other end. It has three 6 ft long and 4-ft 3-in. openings at the top for the stainless steel exhaust ducts, with automatic adjustable dampers for the two electric and one turbine driven fan.

The 4-ft by 3-ft stainless-steel outlet ducts, outfitted with flexible connections and automatic dampers, are connected to a rectangular variable cross section reinforced concrete duct by three 45° inclined entry ports. Extending from the exhaust end of this duct is a 13-ft-long stainless steel duct which converges over the first 9 ft from a cross section of 26.25 $ft^2$ to a constant cross section of 23.41 $ft^2$ for the last 4 ft. The constant-cross section stainless steel duct, with a centerline 5 ft 11 in. above the top of the stack foundation, breeches the stack and the acid-brick lining for the passage of the gases for dispersal through the stack.

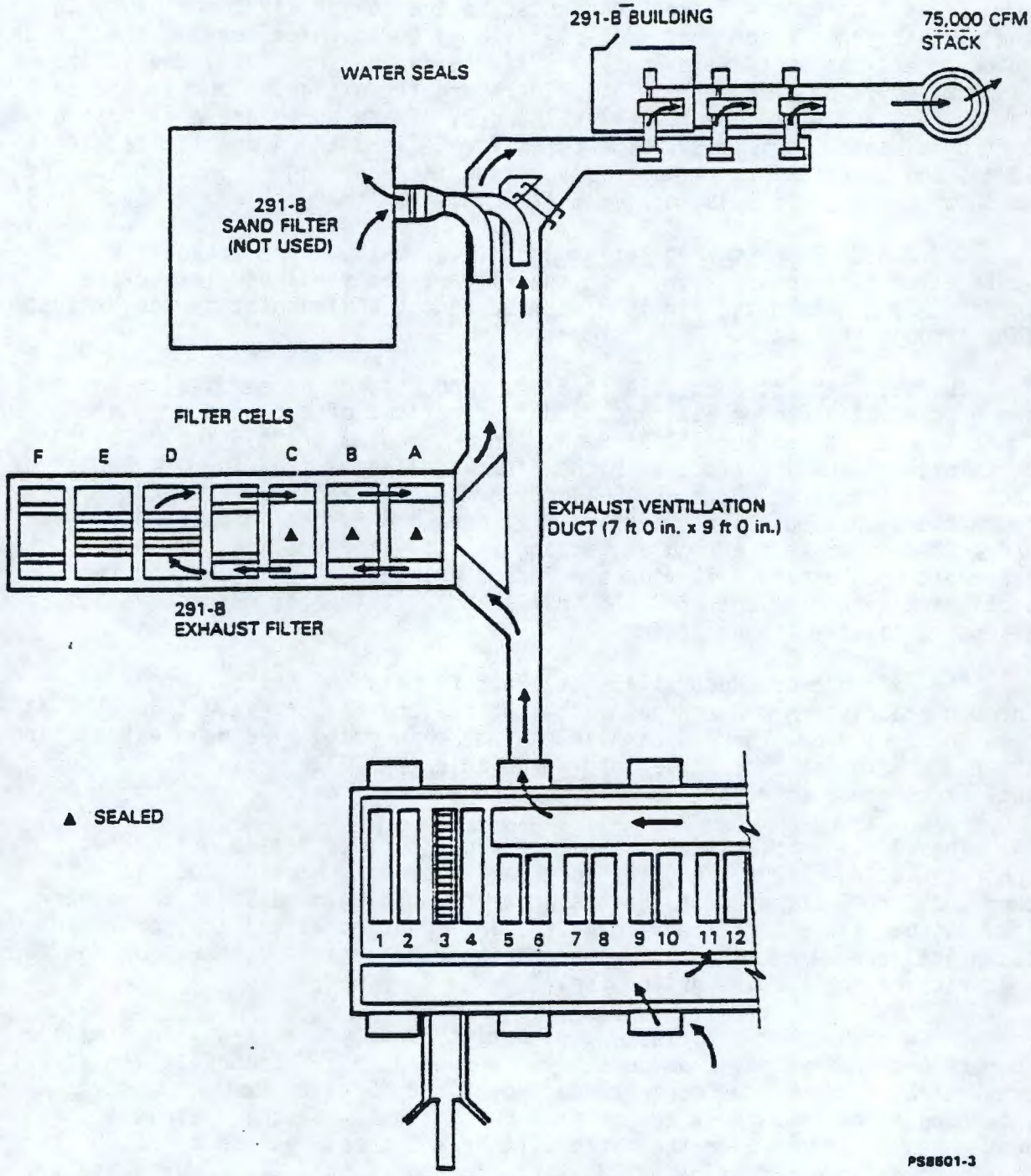


FIGURE 5-13. Canyon Exhaust Ventilation Duct.

5.3.3.7 Survivability of Canyon Building - 221-B. A seismic analysis of the 221-B Canyon Building has not been previously performed. However, a preliminary deadload and seismic analysis of the 221-T reinforced concrete canyon building has been performed (Ref. 5-7). The 221-B and 221-T Buildings are essentially identical, were both constructed in 1943, and are depicted by the same structural design drawings. The 0.25 g Safe Shutdown Earthquake (SSE) ground motions were used in the 221-T Building analysis (Ref. 5-8). The analysis results show transverse section of the building due to the deadload plus SSE bending moments, i.e., linear analysis indicates minimal seismic resistance for the building. Soil structure interaction effects are not expected to alter these conclusions. Nonlinear dynamic analyses would be required to finally assess whether the canyon building has sufficient ductility to withstand the SSE and avoid collapse.

5.3.3.8 Survivability of Exhaust Ventilation Air Tunnels - 291-B (Ref. 5-7). The air tunnels are located completely underground and are thus protected from tornadoes and tornado-generated missiles. Seismic analysis, including the effect of soil-structure interactions for buried structures, all straight sections (referring to the long, straight sections away from connections to large structures), plus bends or discontinuities of the tunnel, indicated an adequate resistance to the SSE motions. However, at connections to other structures and bends, the bending moments calculated due to maximum soil strain during both HRHE and SSE indicate substantial cracking and yielding of the reinforcing steel are expected to occur. Deformation under the SSE is unlikely to provide a path for radioactive particles to escape through the 1-ft-thick tunnel wall. The probability of a major structural failure or total blockage of the tunnel system is small due to the fact that the transverse reinforcement is adequately spaced to prevent any major collapse. Also, significant reduction in the stress levels are expected to occur upon the development of plastic hinges at high stress.

5.3.4 212-B Cask Station (Ref. 5-10, Fig. 5-14)

The building is situated in the 200 East Area at the southwest corner of B Plant so that process and utility piping and other supporting services in B Plant can be conveniently utilized.

Highly radioactive materials are shipped in shielded transfer casks which provide radionuclide containment and personnel protection from ionizing radiation. The 212-B Cask Station and 221-B (B Plant) Cell 35 contain facilities for loading and unloading fission products from casks.

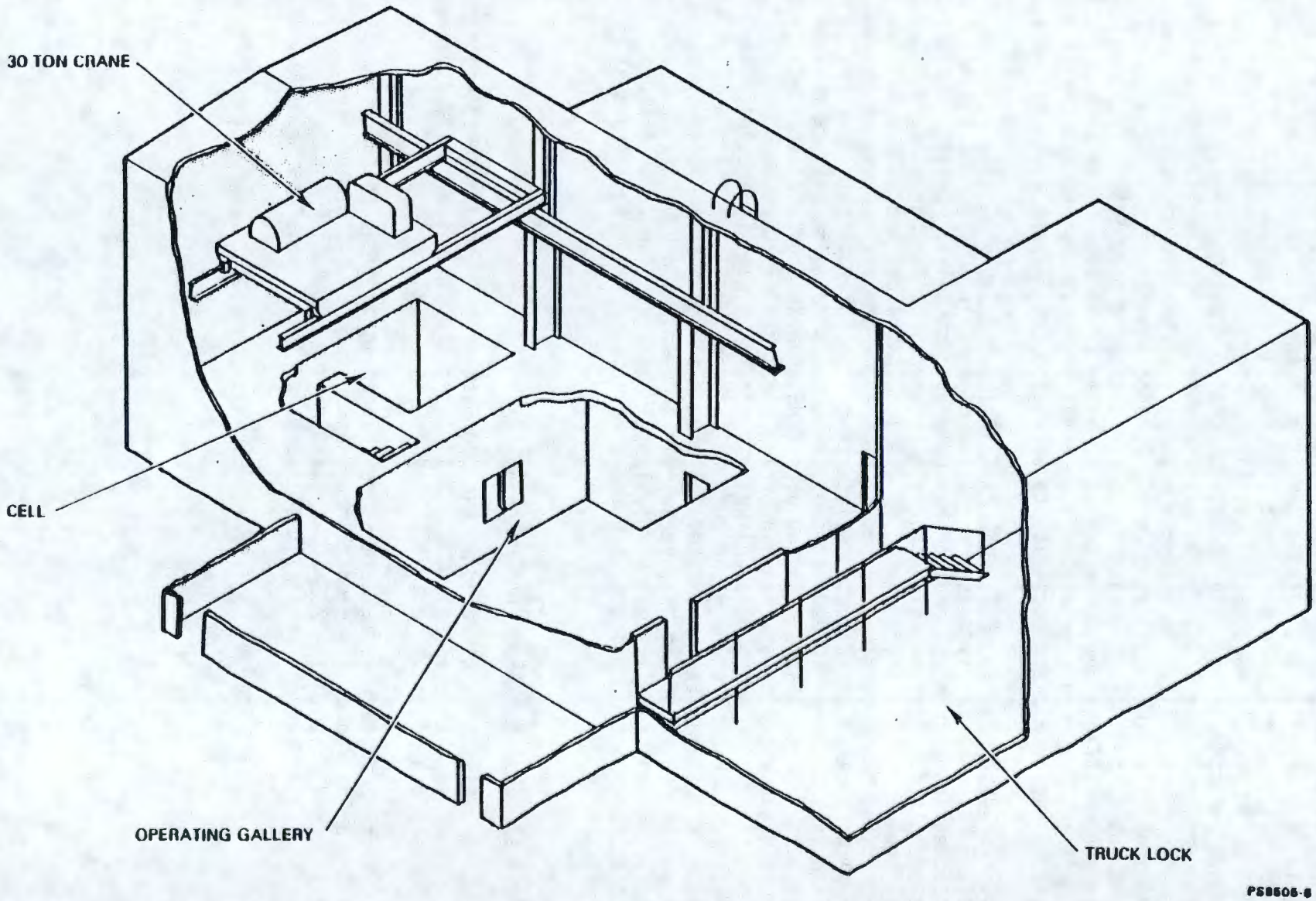


FIGURE 5-14. 212-B Cask Station.

5.3.4.1 Controlled Access Area. The 212-B Cask Station is a controlled access area which contains a buffer and a radiation areas.

- Buffer Area--This area consists of the operating gallery, heating, ventilation, air conditioning, laundry storage, and change room.

- Radiation Area--This is essentially the regulated work area underground concrete cell, a cask storage and surveillance room, and an airlock for the cask carrier.

5.3.4.2 212-B Cask Station Facility Description. The Cask Station facilities include a truck lock, a cask handling and surveillance room, an underground operating gallery and cell, and attached laundry storage and change rooms. Figure 5-16 shows the general layout of the building. The Cask Station Building is a sheet-metal-covered steel-frame structure, 76 ft long by 48.7 ft wide. The inside height of the building varies from 22 ft, in the cask handling and surveillance room, to 35 ft in the cell area. There is one personnel access door on the east side of the building and an emergency exit door on the west side of the building. Truck access to the building is provided through a 14-ft-high by 14-ft-wide rolling steel door located on the east side of the building.

5.3.4.2.1 Truck Lock. The truck lock is located at the extreme south end of the building and is 21 ft wide by 45 ft long by 26 ft high (Fig. 5-14). A 30-ton crane located on an overhead rail system 16 1/2 ft above the floor is used to load and unload casks from trucks in the lock. The wall between the truck lock and the cask storage and surveillance room is 9-in. thick concrete and contains two doorways. One doorway located near the west end is for personnel access between the two rooms. The second doorway located on the north wall, approximately in the middle of the truck lock, is for passage of the cask and crane between rooms. This doorway contains a double door, 10 ft wide and 11 ft high, for cask passage, plus a third door located across the top of the wall for crane passage between rooms. The craneway door is hinged at the top and swings northward and up towards the ceiling of the cask handling and surveillance room. This door is 24 ft wide and 8 ft high. A third doorway is located in the northeast sector of the truck lock for passage between the truck lock and the dirty laundry storage room.

5.3.4.2.2 Cask Storage and Surveillance Room. The cask storage and surveillance room is the large area containing almost the entire floor space of the building at ground level. The dimensions are 54 ft long by 48.7 ft wide by 22 ft high. The 30-ton crane runs on an overhead rail system 12.6 ft above the floor. Located at the north end of the room is the 12.5 ft by 12.5 ft by 2-ft-thick cover block for the cell. Adjacent to the southwest corner of this cover block is a 3.75 ft by 3.75 ft access hatch, which permits personnel entry to the cell through a labyrinth passageway.

Three personnel access doors are provided to the room. The main door is located near the southeast corner and is connected to an airlock containing storage cabinets and a radiation detector. The airlock also serves as a personnel monitoring station. The remaining doors are the emergency exit on the west side and the entry to the truck lock, which was described previously.

5.3.4.2.3 212-B Cell. The cell is located underground near the north end of the building and is 11 ft square by 17 ft deep (measured from the bottom of the 2-ft-thick cover block to the top of the concrete floor). The south wall of the cell is 4-ft-thick concrete containing a 4-ft-square 40-in.-deep, lead-glass viewing window (equivalent shielding to 15 in. of lead) and passageways for two manipulators. The north and east walls and the cell floor are 1-ft-thick concrete, while the west wall is 2-ft-thick concrete. The walls and bottom of the cell are lined with 16 gage SST Type 304. Along the west, south, and east walls of the cell a 3-ft-high steel grating platform extends around a 7-ft-dia. hole provided for casks. Piping to and from the cell will be discussed in Section 5.3.4.3. The personnel entrance labyrinth is separated from the cell by 2 ft of concrete and has a 1 3/4-in. thick door which opens onto the grating platform. The cell north wall contains filters and an exhaust air duct to the existing 221-B Ventilation air tunnel. A sump 8 in. square and 7 in. deep is located in the cell northeast corner. Four 1/2-in. SST chemical spray nozzles are located around the top and the middle of the cell. Thermocouples are provided to monitor temperatures in casks and in the cask cooling water. An intercom system provides communication between the cell and the operating gallery.

5.3.4.2.4 Operating Gallery or Control Room. The operating gallery is located directly south of the cell and is 27 ft long, 12 to 18 ft wide, and 11-ft high. The room contains the viewing window, manipulator controls, an instrument panel, a motor control center, a heating, ventilation, and air conditioning (HVAC) panel; and, a sump. The only personnel access to the room is from a door on the east wall. All of the walls of the room are 1-ft-thick concrete, except opposite the cell where the wall is 4 ft thick. The ceiling is 16-in.-thick concrete, and the floor is 6 in. thick.

5.3.4.2.5 Change Room. The change room is located north of the main entrance door on the east side of the building. The room is 17.5 to 20 ft long, 18.5 ft wide, and 12 ft high. It contains SWP clothing storage bins, lockers, a sink, a toilet, a shower, a drinking fountain, and a hot water heater. The room has two personnel access doors, one on the south side and the other near the northeast corner. The load-out and the load-in line encasement from the 212-B Cell to 221-B Cell is located beneath the change room floor. During cask loading and unloading operations, radiation dose rates inside the change room become elevated from their normal levels.

9 3 1 2 8 9 9 1 8 3 5

5.3.4.2.6 Laundry Storage Rooms. The clean and dirty laundry for 212-B is stored in two small rooms south of the main entrance door on the east side of the building. Each of these rooms, 8.5 ft square and 12 ft high, is entered through a 3.5-ft-wide sliding steel door.

5.3.4.3 Process Equipment and Piping. The cask station process equipment and piping includes the cell piping, the pipe encasements, the aqueous makeup facilities (AMU), and the waste tank, TK-CS-3.

5.3.4.3.1 Cell Piping. All process piping, i.e., radioactively "hot" piping, enters the cell through the cell east wall from the hot pipe encasement. The process lines extend through the wall and are joined in a series of flushing manifolds, which are installed in a 4-in.-deep water-filled tray designed to hold any line leakage and to provide some process line shielding. All the lines and valves in the tray are 1 in. dia. except one 1/2-in.-dia. line connecting Process Line T-11-228 and Line T-6-221.

All service and utility piping enter the cell through the cell west wall.

5.3.4.3.2 Pipe Encasements. The 212-B Building has three separate buried pipe encasements which connect the Cask Station with the 221-B Building. One encasement contains the hot process lines while the other two encasements contain service lines.

The hot pipe encasement begins at the east edge of the cell wall approximately 2 ft below grade. It travels east for about 71 ft and then turns north for 16 ft where it enters the 221-B Building at Cell 35. The entire length of the encasement and the lines it contains have a uniform slope toward the 221-B Building of 1/14 in./ft. The encasement is constructed of concrete 6 in. thick on the sides and top, and from 12 to 8 in. thick on the bottom. The top and sides of the encasement are covered with a membrane water proofing. The top of the encasement has been covered with an additional 18 in. of concrete to provide shielding, and below the change room, the encasement is covered by an additional 24 in. of concrete. The inside dimensions of the encasement are 3 ft wide by 1 1/3 ft high. The encasement contains a branch approximately 24 ft from the east wall of 212-B which contains two spare lines originally intended for future rail services. One line to Wall Nozzle 209 in Cell 35 is used for the small diameter $SrCO_3$ loadout lines (one line in use and two spares). The other line to Wall Nozzle 225 is still available as a spare if needed in the future.

A 2-in. test riser for the encasement is provided 1 1/2 ft from the 221-B Building. The encasement drain (Line 224) begins at the low point of the pipe encasement, about 2 in. south of 221-B, and drains to TK-35-2. The encasement enters Cell 35 through a 14 in. penetration that runs 2 ft 8 in. beneath, and perpendicular to, the B Plant hot-pipe trench.

The east service line encasement begins at the northeast edge of the cell wall approximately 3 ft below grade. The encasement travels east for 24 ft and then turns north for 13 ft where it enters the 221-B Building between Cells 37 and 38. The encasement consists of a 10-in. earthenware pipe that has a constant slope towards the 221-B Building of 1/16 in./ft. After entering 221-B, the pipe becomes level and continues to the electrical gallery.

The north service line encasement begins at the north wall 3 ft 3 in. west of the center of the 212-B Building. The line runs directly north for 8 ft and then enters 212-B Building between Cells 39 and 40. The encasement consists of a 10-in. earthenware and a 6-in. Schedule-5 pipe that has a constant slope towards the 221-B Building of 1/16 in./ft. The 6-in. pipe is inserted partly through the side of the 10 in. pipe and parallel to it. After entering 221-B, the pipes become level and continue to the electrical gallery.

5.3.4.4 Survivability of 212-B Cask Loading Station (Ref 5-7). The three distinct structural components of the 212-B Cask Loading Station were analyzed separately.

5.3.4.4.1 Operating Gallery. The below-grade operating gallery, a reinforced concrete structure, was analyzed for the HRHE and SSE as a retaining wall structure; but being below grade, the effects of tornado impact were not considered.

Stresses calculated for the retaining walls of the below-grade operating gallery area during either seismic events are within applicable code limitations and are adequate to resist seismic motions. This portion of the facility is not exposed to wind loads. Calculated stresses in the above-grade cask handling area structural steel are within code limitations for both HRHE and SSE.

5.3.4.4.2 Cask Handling and Surveillance Area. The cask handling and surveillance area, above the operating gallery and enclosed by structural steel frame with insulated and noninsulated corrugated siding and roofing, was analyzed for HRHE and the SSE. The east-west structural bent (support member) with the 30-ton crane located at the bent was analyzed for earthquake motions and tornado loads.

The steel structure cannot withstand tornado wind loads. The siding is not designed to take the pressure loading induced by a 175 mph wind or a 0.75 psi pressure drop. The probable failure would be the fastening system. If the siding were to remain attached during a tornado, there would be unacceptably high stresses in the upper column sections (W8 by 31s), the corner framing bolts, and the column anchor bolts.

The minimum thickness of steel required to stop all of the tornado-generated missiles is 0.3 in., which is substantially greater than the 18-gage (mean thickness of 0.0516 in.) siding. There is also a high probability that the cask station siding may become a tornado-generated missile itself.



9 3 1 2 8 9 9 1 8 3 7

5.3.4.4.3 Other Structures. Only a qualitative appraisal of the enclosures on the north and south sides of 212-B was made. These structures do not have moment-resistant connections. Therefore, only minimal lateral force resistance is expected to be provided by the siding.

5.3.4.4.4 Internal System. Seismic analysis of the 212-B internal systems have not been performed, but field inspection indicates that equipment, piping, and conduit are not laterally restrained for seismic survival. Quantification of the apparent shortcomings and consequences can be established only by analysis.

## 5.4 VENTILATION SYSTEM--221-B CANYON, 212-B CASK STATION AND 271-B SERVICE BUILDING

The ventilation system in association with the physical containment comprises the confinement system. There are two essential features of the ventilation system; pressure differentials, and high efficiency particulate (HEPA) filtration. A system of pressure differential is used and a gradient is established by the supply and the exhaust fans to govern the flow of air essential to localization and containment of radioactive aerosols and particulate such that the exhaust collection points are located in areas with potentially dispersable material.

By the introduction of indexes of potential hazards and limitations on the quantities of materials that can be handled (Ref. 5-11) it is possible to establish a basis for ventilation and air cleaning requirements in various parts of a building. A building or a facility can be divided into confinement zones with respect to the hazard classes and criteria on zoning of facilities based on radiotoxicity of materials handled. Zones are defined with respect to function and permitted occupancy as follows.

- Zone I--Containment features must prevent the spread of radioactive material within and release from the building under both normal and upset conditions up to and including the design basis accident (DBA) for the facility. Complete isolation (physical separation) from neighboring facilities and operating areas, independent exhaust air system with at least two stages of testable HEPA filters and a high-efficiency inlet filter are required. Entry is forbidden until area is cleaned up to Zone II classification and entry permitted with full protective clothing and respiratory protection as specified by the Health Physicist. This zone includes process equipment, the process cell, the air tunnel, the exhaust ventilation duct, and the high efficiency particulate air (HEPA) filters as the boundary.

- Zone II--This is generally the restricted area where personnel are required to wear full protective clothing and respiratory protection as specified by the Health Physicist. This comprises the canyon, space above the cell blocks, and the crane cabway.

- Zone III--General working areas which are usually "cold" but which are subject to low levels of radiation in the air are considered in this zone category. Routine airborne radiation monitoring is required. Operating personnel are not required to wear special clothing. The operating galleries are classified as Zone III.

- Zone IV--This zone does not require specific protective clothing although radiation monitoring may be required at exit points. Generally this covers office and "cold" areas (i.e., 271-B Service Building).

There are three independent ventilation systems for the 221-B Canyon and the 271-B Service Building. The vessel ventilation systems form a part of the primary containment feature discussed later (Section 5.8.2). The 212-B Cask Station has an independent supply system but interfaces with the canyon exhaust ventilation system by exhausting into the air tunnel.

### 5.4.1 271-B Service Building Ventilation System

The fresh air is drawn from the outside through 16 ft by 16 ft vertical, rectangular cross-section duct reaching to the roof of the building into a central air filtering, washing and conditioning unit. The air is fed through the ducts to the four floors of the building by a Buffalo Forge Company fan with a counterclockwise rotation. The fan delivers 80,000 $ft^3$/min at 3 in. water static pressure (SP) and 70°F and is driven by a motor rated at 52.5 BHP and 554 rpm (Ref. 5-12, 5-13). The static pressure is maintained just slightly above that in the operating gallery such that air flows from 271-B into the galleries. Air is exhausted from the building through exhaust fans on each floor.

### 5.4.2 Gallery Ventilation System (Fig. 5-15, Tables 5-2, 5-3A, 5-3B, 5-4, 5-5).

The ten supply fans rated at 5,000 $ft^3$/min in the operating gallery, two additional 10,000 $ft^3$/min supply fans in the electrical gallery, and the seven exhaust fans with six fans located in the pipe gallery and one in the electrical gallery constitutes the gallery ventilation system.

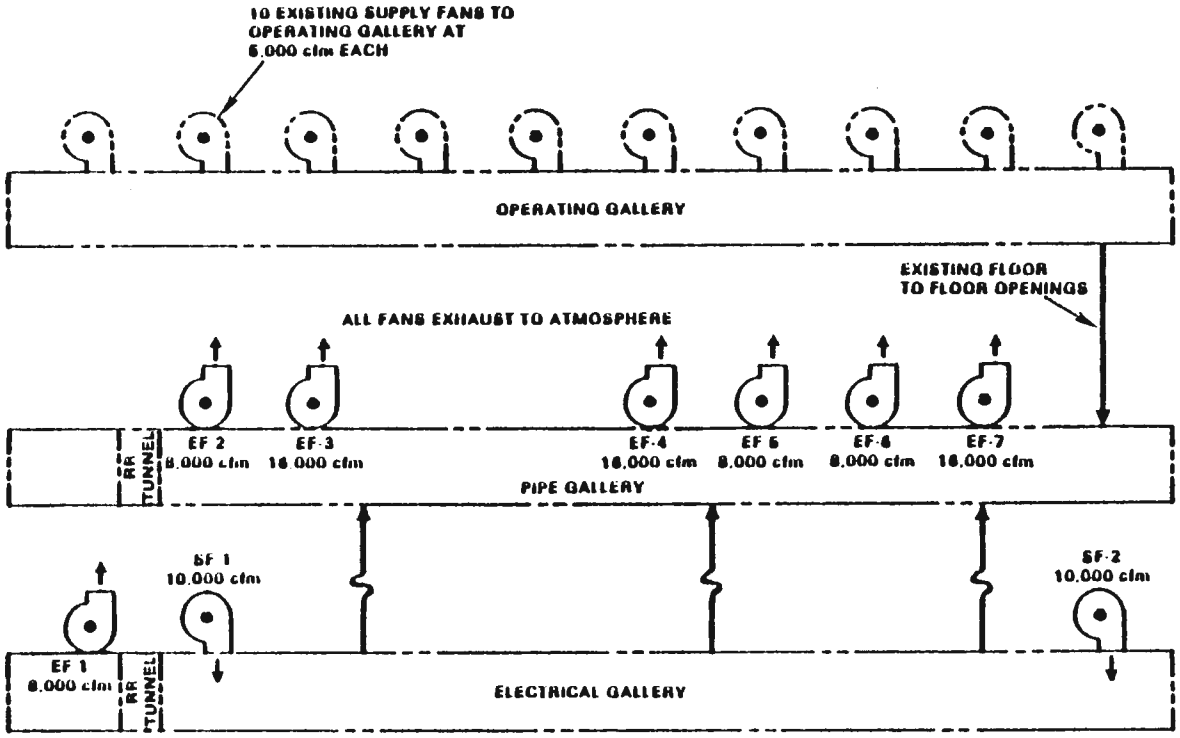


| EXHAUST SYSTEM | | | |
|---|---|---|---|
| EXHAUST FAN NO. | CFM | AREA SERVING | FAN LOCATION |
| EF-1 | 8,000 | ELECTRICAL GALLERY | SECTION 1 STORAGE ROOM |
| EF-2 | 8,000 | PIPE GALLERY | SECTION 4 OUTSIDE |
| EF-3 | 16,000 | PIPE GALLERY | SECTION 6 OUTSIDE |
| EF-4 | 16,000 | PIPE GALLERY | SECTION 12 OUTSIDE |
| EF-5 | 8,000 | PIPE GALLERY | SECTION 14 OUTSIDE |
| EF-6 | 8,000 | PIPE GALLERY | SECTION 16 OUTSIDE |
| EF-7 | 16,000 | PIPE GALLERY | SECTION 18 OUTSIDE |

VENTILATION FLOW PATTERN

P58504-65

FIGURE 5-15. Ventilation Flow Pattern of the Gallery Ventilation System.

TABLE 5-2. Gallery Centrifugal Exhaust and Supply Fans.

| Equip. no. | Design CFM | Air temp. (°F) | Est. SP in WG | Max. OV (FPM) | Class ** | Dis-charge | Rota-tion | Arrgt. | Type | Fan RPM | Motor | | | | | |
|---|---|---|---|---|---|---|---|---|---|---|---|---|---|---|---|---|
| | | | | | | | | | | | HP | RPM | Volts | Phase | Hertz | Accessories & remarks |
| EF-1 | 8,000 | 80 | 5.5 | 2,600 | I | UB | CW | 9 | SWSI | 1,381 | 10 | 1,750 | 480 | 3 | 60 | Typical-All Fans: |
| EF-2 | 8,000 | 80 | 5.5 | 2,600 | I | UB | CCW | 9 | SWSI | 1,381 | 10 | 1,750 | 480 | 3 | 60 | Radial inlet damper, fan shaft seals, flanged inlet and discharge conn's weatherproof guards, plugged drain and access panel - 75% minimum mechanical effort |
| EF-3 | 16,000 | 80 | 5.5 | 2,600 | II | UB | CW | 9 | SWSI | 1,217 | 20 | 1,750 | 480 | 3 | 60 | |
| EF-4 | 16,000 | 80 | 5.5 | 2,600 | II | UB | CW | 9 | SWSI | 1,217 | 20 | 1,750 | 480 | 3 | 60 | |
| EF-5 | 8,000 | 80 | 5.5 | 2,600 | I | UB | CW | 9 | SWSI | 1,381 | 10 | 1,750 | 480 | 3 | 60 | |
| EF-6 | 8,000 | 80 | 5.5 | 2,600 | I | UB | CW | 9 | SWSI | 1,381 | 10 | 1,750 | 480 | 3 | 60 | |
| EF-7 | 16,000 | 80 | 5.5 | 2,600 | II | UB | CW | 9 | SWSI | 1,217 | 20 | 1,750 | 480 | 3 | 60 | |
| SF-1 | 10,000 | | 3.0 | 2,415 | I | UB | CW | | DWDI | 1,663 | 10 | 1,750 | 480 | 3 | 60 | |
| SF-2 | 10,000 | | 3.0 | 2,415 | I | UB | CW | | DWDI | 1,663 | 10 | 1,750 | 480 | 3 | 60 | |

TABLE 5-3A. Humidifier Data for Electrical Gallery Supply Fans.

| Equip. no. | Summer | | Winter | | Air resist in WG | Saturation efficiency | Pump motor (Internally MTD) | | | | | | |
|---|---|---|---|---|---|---|---|---|---|---|---|---|---|
| | °F DB | °F WB | °F DB | °F WB | | | GPM | Head | HP | RPM | Volt | Phase | HZ |
| H-1 | EN 96<br>LV 71 | EN 68<br>LV 68 | EN 68<br>LV 57 | EN 53<br>LV 53 | Max 0.15 | Min 90% | 12 | 20 | 1/2 | 1,750 | 480 | 3 | 60 |
| H-2 | EN 96<br>LV 71 | EN 68<br>LV 68 | EN 90<br>LV 57 | EN 53<br>LV 53 | Max 0.15 | Min 90% | 12 | 20 | 1/2 | 1,750 | 480 | 3 | 60 |

Table 5-3B. Air Monitors for Exhaust Fans.

| Indent no. | Size (inches) | CFM | Max air PD (WG) | System no. | Location section no. |
|---|---|---|---|---|---|
| AM-1 | 24x36x12 | 8,000 | 0.06 | EF-1 | 1 |
| AM-2 | 24x24x12 | 8,000 | 0.09 | EF-2 | 4 |
| AM-3.1 | 26x26x12 | 8,000 | 0.07 | EF-3 | 7 |
| AM-3.2 | 26x30x12 | 8,000 | 0.06 | EF-3 | 6 |
| AM-4.1 | 50x24x12 | 8,000 | 0.03 | EF-4 | 12 |
| AM-4.2 | 50x24x12 | 8,000 | 0.03 | EF-4 | 10 |
| AM-5 | 24x24x12 | 8,000 | 0.09 | EF-5 | 14 |
| AM-6 | 24x24x12 | 8,000 | 0.09 | EF-6 | 16 |
| AM-7.1 | 26x26x12 | 8,000 | 0.07 | EF-7 | 19 |
| AM-7.2 | 26x30x18 | 8,000 | 0.06 | EF-6 | 18 |
| AM-8 | 24x30x12 | 10,000 | 0.06 | SF-1 | 3 |
| AM-9 | 24x30x18 | 10,000 | 0.06 | SF-2 | 19 |

TABLE 5-4. Filter Box Information for Gallery Supply and Exhaust Fans.

| Equip. no. | Design CFM | 55% NBS | | | | | 49.97% DOP | | | | | Location section no. |
|---|---|---|---|---|---|---|---|---|---|---|---|---|
| | | No. | Size (inches) | Max FV (FPM) | Resistance in WG | | No. | Size (inches) | Max FV (FPM) | Resistance in WG | | |
| | | | | | Initial | Max final | | | | Initial | Max final | |
| FB-1 | 8,000 | 9 | 24x24x2 | 225 | 0.12 | 0.25 | 9 | 24x24x11-1/2 | 225 | 0.85 | 4.00 | Electrical Gallery |
| FB-2 | 8,000 | 9 | 24x24x2 | 225 | 0.12 | 0.25 | 9 | 24x24x11-1/2 | 225 | 0.85 | 4.00 | Pipe Gallery |
| FB-3.1 | 8,000 | 9 | 24x24x2 | 225 | 0.12 | 0.25 | 9 | 24x24x11-1/2 | 225 | 0.85 | 4.00 | |
| FB-3.2 | 8,000 | 9 | 24x24x2 | 225 | 0.12 | 0.25 | 9 | 24x24x11-1/2 | 225 | 0.85 | 4.00 | |
| FB-4.1 | 8,000 | 9 | 24x24x2 | 225 | 0.12 | 0.25 | 9 | 24x24x11-1/2 | 225 | 0.85 | 4.00 | |
| FB-4.2 | 8,000 | 9 | 24x24x2 | 225 | 0.12 | 0.25 | 9 | 24x24x11-1/2 | 225 | 0.85 | 4.00 | |
| FB-5 | 8,000 | 9 | 24x24x2 | 225 | 0.12 | 0.25 | 9 | 24x24x11-1/2 | 225 | 0.85 | 4.00 | |
| FB-6 | 8,000 | 9 | 24x24x2 | 225 | 0.12 | 0.25 | 9 | 24x24x11-1/2 | 225 | 0.85 | 4.00 | |
| FB-7.1 | 8,000 | 9 | 24x24x2 | 225 | 0.12 | 0.25 | 9 | 24x24x11-1/2 | 225 | 0.85 | 4.00 | |
| FB-7.2 | 8,000 | 9 | 24x24x2 | 225 | 0.12 | 0.25 | 9 | 24x24x11-1/2 | 225 | 0.85 | 4.00 | Pipe Gallery |

| Equip. No. | Design CFM | Size (in.) | Arrangement | | | Max FV (FPM) | Resistance in WC | | Test and Rating | Location | Remarks |
|---|---|---|---|---|---|---|---|---|---|---|---|
| | | | High | Wide | No. filters | | Initial | Max Final | | | |
| F-1.1 | 10,000 | 24x24x2 | 2 | 3 | 6 | 420 | 0.25 | 0.50 | 35%NBS | SF-1 | |
| F-1.2 | 10,000 | 24x24x12 | 2 | 3 | 6 | 420 | 0.25 | 0.75 | 50%NBS | SF-1 | |
| F-2.1 | 10,000 | 24x24x2 | 2 | 3 | 6 | 420 | 0.25 | 0.50 | 35%NBS | SF-2 | |
| F-2.2 | 10,000 | 24x24x12 | 2 | 3 | 6 | 420 | 0.25 | 0.75 | 50%NBS | SF-2 | |

TABLE 5-5. Reheat, Preheat, and Sump Heater for Gallery Fans.

| Equip. no. | Design CFM | CAP MBH | Air Temp °F | | Steam psig | Min. FA $ft^2$ | Tube length | Coil Arrangement | | | Coil AP in WG | Additional data |
|---|---|---|---|---|---|---|---|---|---|---|---|---|
| | | | ENT | LVG | | | | High | Wide | No. | | |
| RHC[a]-1 | 10,000 | 360 | 56.7 | 90 | 15 | 12.6 | 6 ft 0 in. | 1 | 1 | 1 | 0.11 | One row conns same end |
| RHC-2 | 10,000 | 360 | 56.7 | 90 | 15 | 12.6 | 6 ft 0 in. | 1 | 1 | 1 | 0.11 | One row conns same end |
| PHC[b]-1.1 | 10,000 | 540 | -10 | 40 | 70 | 12.75 | 5 ft 6 in. | 1 | 1 | 1 | 0.16 | One row - conns same end 8FPI |
| PHC-1.2 | 10,000 | 540 | 40 | 90 | 70 | 12.75 | 5 ft 6 in. | 1 | 1 | 1 | 0.16 | One row - conns same end 8FPI |
| PHC-2.1 | 10,000 | 540 | -10 | 40 | 70 | 12.75 | 5 ft 6 in. | 1 | 1 | 1 | 0.16 | One row - conns same end 8FPI |
| PHC-2.2 | 10,000 | 540 | 40 | 90 | 70 | 12.75 | 5 ft 6 in. | 1 | 1 | 1 | 0.16 | One row - conns same end 8FPI |
| SH[c]-1.1 | - | 10 | - | - | 70 | - | - | - | - | - | - | Factory supplied sump heater in humidifier section |
| SH-1.2 | - | 10 | - | - | 70 | - | - | - | - | - | - | Factory supplied sump heater in humidifier section |

[a]RHC: Reheat

[b]PHC: Preheat

[c]SH: Sump heater

The pattern of air flow is intake from the atmosphere to the operating gallery and electrical gallery through the pipe gallery to the atmosphere except in the first section of the building. This section contains the men's change room and section of pipe gallery and electrical gallery separated by the railroad tunnel. The flow pattern in this case is from the atmosphere to the operating gallery and the electrical gallery and finally both the streams are exhausted through the pipe gallery (H-2-38391).

The operating and pipe galleries are ventilated by passing outside air through evaporator-type coolers into the operating gallery. This air, in turn, passes through floor grills into the pipe gallery, where it is exhausted to the environment through an 8% National Bureau of Standards (NBS) filter. These areas are at a positive differential pressure with reference to the canyon atmosphere. The operation of all exhaust and supply fans to the galleries can be terminated from the dispatcher's office. However, the fans must be restarted individually from the section fan switch locations at the various pipe gallery stairwells.

The gallery work area is monitored at 15 locations with alarms at the panel board and the dispatcher's office. An additional 34 area-radiation monitors are installed to detect radiation and alarm at the panel board in the event that process solutions enter the galleries.

5.4.2.1 Electrical Gallery Supply Fans SF-1 and SF-2 (Ref. 5-14, Fig. 5-16). Each supply fan is started by a manual push button station located in the operating gallery stairway and connected to a master shutdown switch located in Room 205 of the 271-B Building. The system is capable of operating year round. A winter space temperature of approximately 68° dry bulb at 50% relative humidity can be maintained and during summer a 50% relative humidity can be maintained in the electrical gallery.

The manual switch (MS-1) activates the system energizing electro-pneumatic switch EP-1 allowing 20 psig control air to pass to the damper motor (D-1). The adjustable louver then moves to its full open (45°) position. Temperature controller (TC-1) senses the temperature of the outside air entering the unit and, if the temperature falls below 40°F, it opens the two-position temperature-controlled valve (TCV-1) allowing 70 psig steam flow to preheater controller (PHC-1.1) to provide heat for temperature control. When the pressure differential across each HEPA filter bank attains 4.0 in. WG as indicated by the pressure indicators or when radioactivity levels reach a maximum value for contact maintenance, the respective fans are stopped and the HEPA filters are replaced with clean filters.

The humidistat (H-1) and the thermostat (T-1) are located on the electrical north wall 5 ft above the floor. The thermostat (T-1) modulates the control valve (CV-3) to maintain a dry bulb temperature of 68°F and the humidistat (H-1) modulates the control valve (TCV-2) to maintain a relative humidity of 50% in the electrical gallery. With an increase in relative humidity above 50%, the humidistat (H-1) through the maximum pressure relay (HP-1) overrides the thermostat (T-1) and modulates the temperature control valve (TCV-3) to maintain a 50% relative humidity.

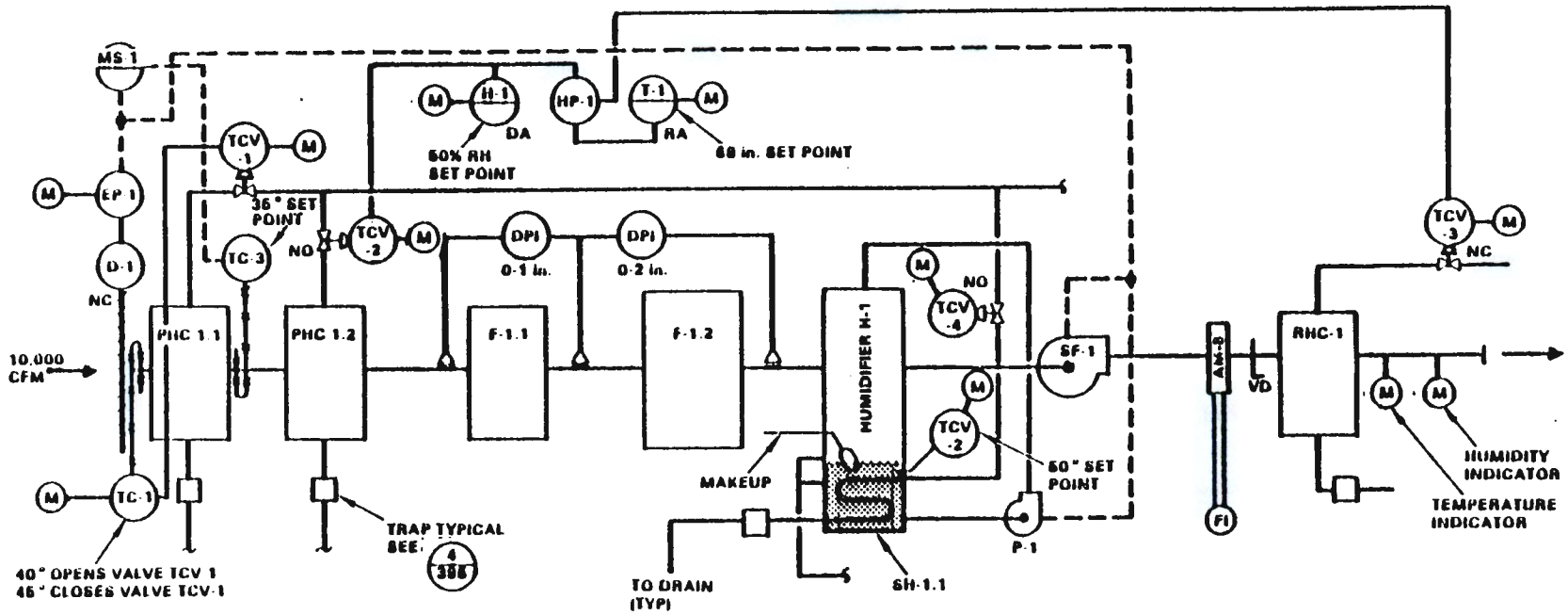


ELECTRICAL GALLERY SUPPLY SYSTEM
FOR SF-1 AND SF-2 (SYSTEMS REQUIRED)

| EQUIPMENT DESIGNATION | |
|---|---|
| SF | SUPPLY FAN |
| EF | EXHAUST FAN |
| SH | SUMP HEATER |
| PHC | PRE-HEAT COIL |
| RHC | RE-HEAT COIL |
| FB | FILTER BOX |
| AM | AIR MONITOR |
| H | HUMIDIFIER |
| P | PUMP |
| T | TRAP |
| F | FILTER |

P68604-87

FIGURE 5-16. Electrical Gallery Supply System (Fans SF-1 and SF-2).

The temperature controller (TC-3) (freeze-stat) shuts down the supply fans if the air temperature on the outlet of the preheat coil (PHC-1.1) falls below 35°F. Manual reset must be repositioned before the unit can be restarted. The temperature controller (TC-2) senses the water temperature in the humidifier sump on a drop in temperature below 50°F and the temperature controller (TC-2) modulates the control valve (TCV-4) to maintain a temperature of 50°F. Differential pressure indicators (DPI) measure the static pressure drop across the filter sections. Recirculating pump motor (P-1) in the humidifier section is electrically interconnected with the motor (SF-1) and turns on/off in sequence with the fan motor.

5.4.2.2 Gallery Exhaust Fans EF-1 through EF-7 (Fig. 5-17). There are seven outside mounted exhaust fans of which six fans, EF-2 through EF-7, serve the pipe gallery and one of the fans, EF-1, serves the electrical gallery in the first section of the building (H-2-38395).

These fans are manually started by depressing the fan starter push buttons at their respective station and connected to a master shutdown switch located in Room 205 (dispatcher's office) of the 271-B Building. When the fans are operating, gallery exhaust air is drawn through prefilter and HEPA filter banks and discharged to the atmosphere through the fan outlet.

Control of each system is performed manually. Air flow rate of each fan (except EF-4) is controlled by adjusting the fan vaned inlet damper or volume damper to maintain a positive static pressure in the pipe gallery with respect to the 221-B canyon and negative with respect to the 271-B Building office and shop areas.

5.4.3 Canyon Ventilation System (Fig. 5-18).

The canyon ventilation system capabilities are based on the reliability of the supply and exhaust ventilation fans to maintain a continuous controlled airflow pattern utilizing a system of pressure differentials to govern the flow of radioactive aerosols and/or particulates that can escape the structural containment barriers of the canyon. Typical performance of the ventilation system is described below:

- Maximum air flowrate through the canyon of 75,000 $ft^3$/min
- Maintenance of sufficient air flow through the cells to maintain the cell temperature below 125°F for the protection of electrical and instrument systems and to minimize thermal gradients between the canyon and cell air
- Provision of sufficient openings and restrictions to provide an air flow rate of 37,500 $ft^3$/min (160 fpm) through an open cell.

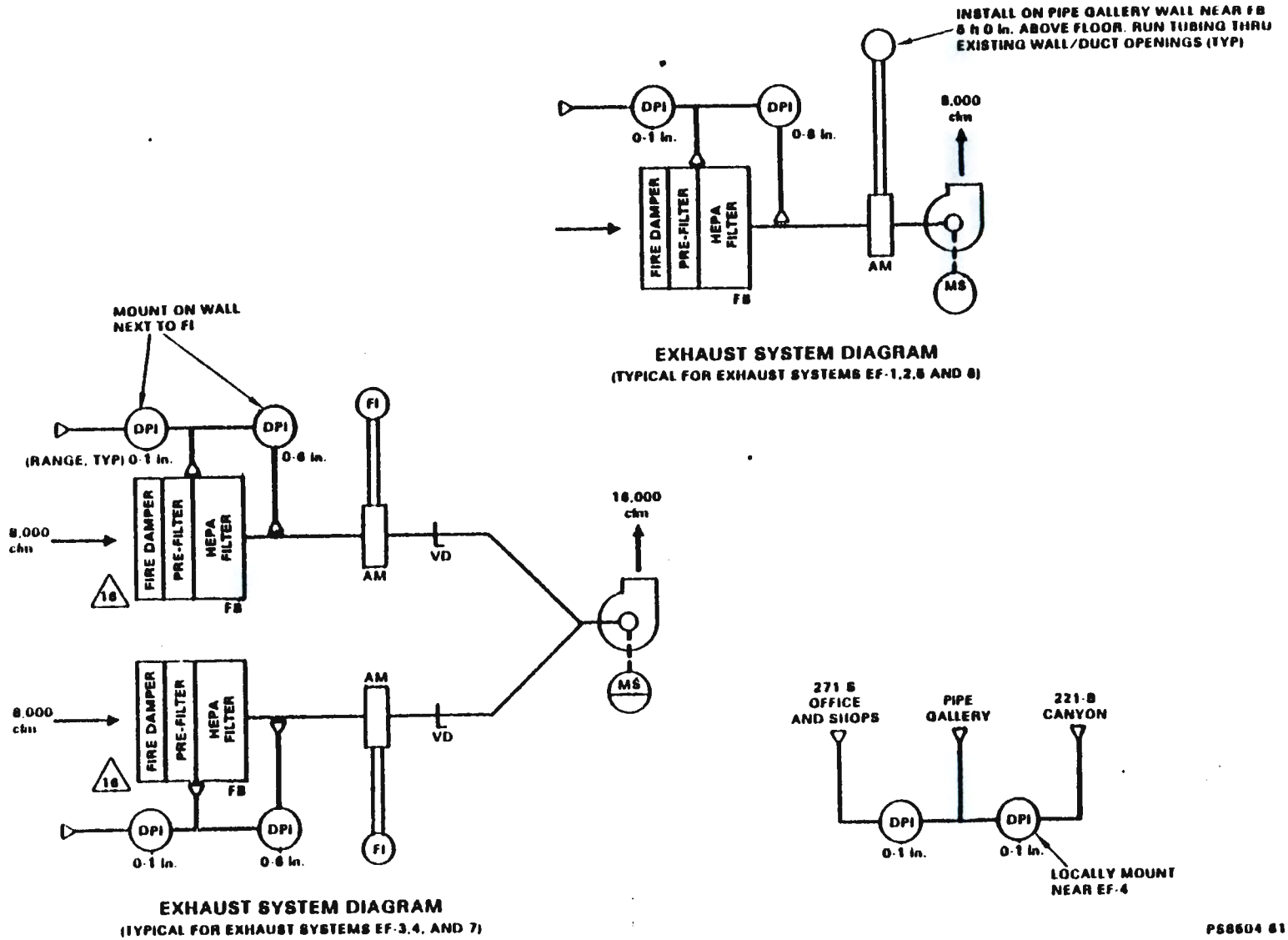


FIGURE 5-17. Pipe Gallery Exhaust System Fans (EF-1 through EF-7).

This Page Intentionally Left Blank

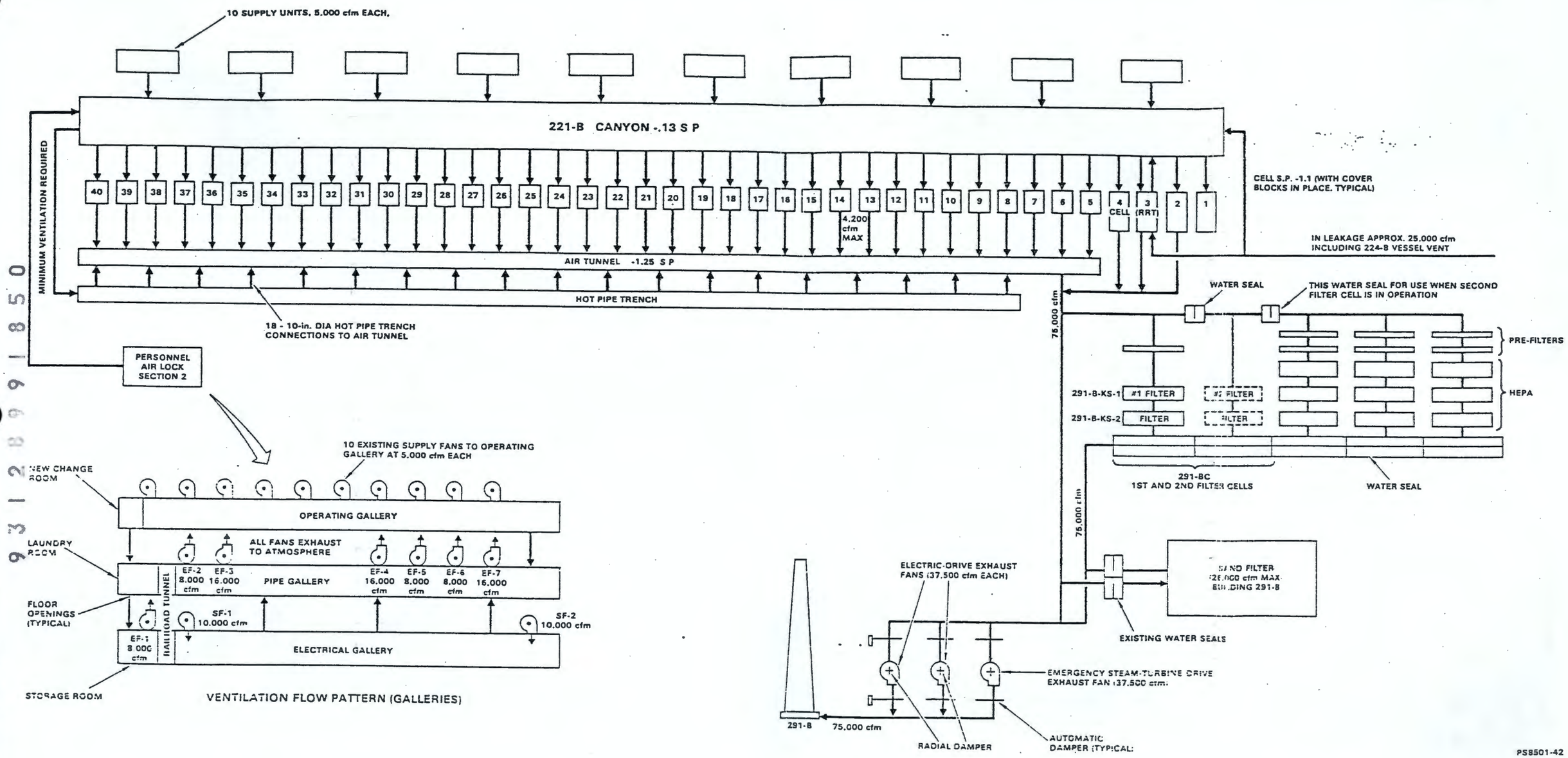


FIGURE 5-18. Canyon Ventilation System.

THIS PAGE INTENTIONALLY
LEFT BLANK

THIS PAGE LEFT BLANK INTENTIONALLY.

9311289911851

5.4.3.1 Canyon Air Flow. A system of pressure differential has been used to govern the flow of airborne radioactive materials that escape the containment.* Pressure differentials of 0.97 in. WG and 1.07 in. WG between the canyon and the cell and the canyon and the air tunnel respectively, can be maintained at an air flow of 75,000 $ft^3$/min. Vacuum greater than the atmospheric pressure of the outside environment is maintained at all times to ensure a positive flow of air into the cell. At the estimated design flow rate of 75,000 $ft^3$/min, the air change in the canyon occurs every 20 min; whereas, two air changes per minute occur in the cell. There is an inleakage of 25,000 $ft^3$/min including the air from 224-B vessel vent.

During normal operation (Fig. 5-19), the confinement capabilities are based on the filtered and washed air being drawn in from the environment by the supply units along the crane cabway from where it flows over the parapet wall and down onto the canyon deck. The air stream infiltrates through the calibrated openings which are 1.045 $ft^2$ minimum and 8.361 $ft^2$ maximum to the cells. The air is drawn through the 14 in. holes at 165 fpm in each cell leading to the air tunnel. The air at an average velocity of 11 ft per second from the air tunnel is filtered and monitored before release.

Vessel vent 1 (Ref. Section 5.8.2) system consists of a header which vents process vessels that do not contain significant quantities of ammonium compounds. The header exhausts through steam heater (E-22-3), a pre filter, and a HEPA filter in series (F-22-5), one 1,200 $ft^3$/min steam jet (J-22-4) which discharge to the air tunnel. Thus gases passing through the vessel vent 1 system are subjected to four stages of high efficiency filtration before release to the atmosphere. Vessel vent 2 system services tanks which contain ammonium compounds. The system exhausts through scrubber (T-22-2) for removal of ammonia vapors, steam heater (E-22-7), a glass wool prefilter (F-22-6), two HEPA filters (F-22-8) in series, two backup high efficiency filters in series (F-22-9), a 125 cfm steam jet, and discharges to the atmosphere via the 24 in. sewer. All gases exhausted through the vessel vent 2 system are therefore subjected to the glass wool prefilter and four stages of high efficiency filters prior to atmospheric release.

5.4.3.2 Canyon Supply Fans (Ref. 5-35 and 5-36). There are ten canyon supply fans, one for each section, rated at 5,000 $ft^3$/min and 2.35 in. static pressure and run by a 3.1 BHP motor. These supply fans, along with the canyon exhaust fans, establish air flow patterns for contamination control. During normal operation, flow rate is maintained by the operation of two supply fans. The start/stop switches for the ten units are centralized on the dispatcher's panel. The supply fans 1, 5, 9, 13, or 17 will shut off if the canyon-to-operating-gallery pressure approaches 0.04 in. and the fans 3, 7, 11, 15, or 19 supply fans will shut down in the event of canyon-to-gallery differential pressure of 0.03 in. The supply fans are tied into the Emergency shutdown switch on the dispatcher's panel, along with the gallery and other miscellaneous 271-B exhaust fans, to shut down all at once. The fans are started by pressing the specified supply fan "start" button.

*To be reviewed upon 221-B ventilation system test.



9 3 1 2 8 9 9 1 8 5 2

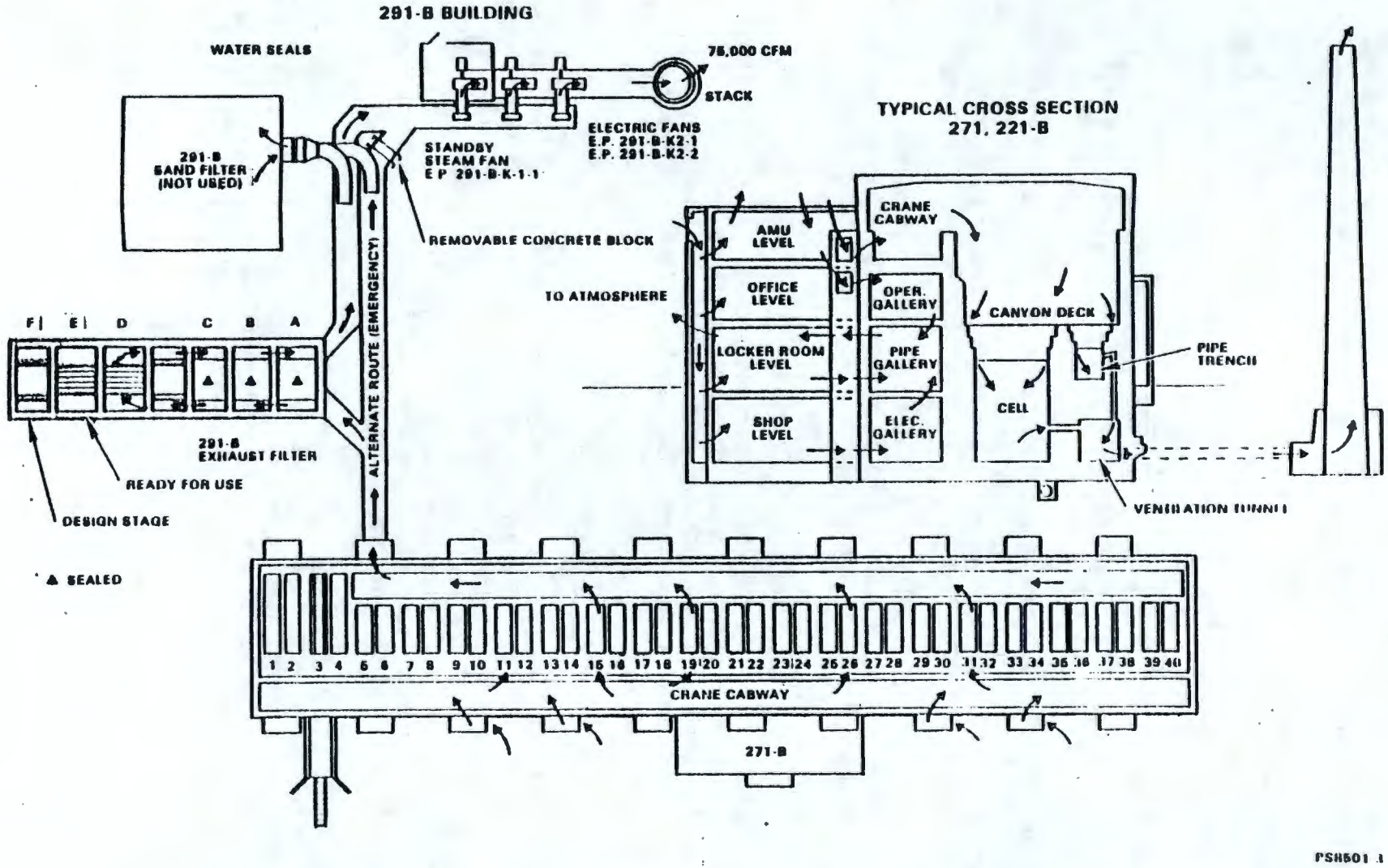


FIGURE 5-19. Ventilation Diagram of the B Plant Processing and Service Area.

During in-cell operation, the air flow patterns are adjusted by selective operation of the supply fans and checked by smoke test to avoid possible contamination drift out of the open cell.

The temperature of the incoming air to canyon is maintained in the comfort zone for personnel working in the canyon by proper washing and humidification or heating, depending upon the environmental air temperature. The incoming air is filtered through 35% NBS filter.

5.4.3.3 212-B Cask Station Ventilation Supply Fans (Fig. 5-20). There are two independent ventilation supply fans that service the contingent and the radiation zones. The two supply systems are located outside the west wall of the 212-B Building and are discussed in the following sections.

The ventilation systems are designed to prevent or limit contamination in the process cell from reaching the operating areas or the surrounding atmosphere. The cell is maintained at a negative pressure with respect to the operating areas which are negative with respect to the atmosphere.

Air is introduced into the cask station by the HVAC equipment located on the west side and is exhausted through a duct filter when passing from the cells to the B Plant air tunnel.

Continuous monitoring air samplers are located in the control room, on the east and west walls of the cask handling and surveillance room, on the north wall of the cell, in the lobby (near entrance door) and in the truck lock. Audible alarms in both the control room and the B Plant dispatcher's office and a flashing red light on the west wall of the lobby are activated by the sampler's radiation monitors. Two samplers (lobby and truck lock) have no alarms.

5.4.3.3.1 K2 (Operating Gallery) System (Fig. 5-21). This ventilation system supplies air to the operating gallery and the entrance and exhausts to the atmosphere. The 2,500 $ft^3$/min inlet fan is an integral part of the K2-4-2 evaporation cooler. The cabinet heaters located inside the main door and the control rooms are rated for 250 $ft^3$/min and 575 $ft^3$/min fans which are an integral part of the heater unit and are manually controlled. The operating gallery and the entrance form the contingent zone and are maintained at a pressure slightly above atmospheric so that leakage flow is maintained in the direction of the radiation zone.

5.4.3.3.2 K1 (Surveillance, the Cask Handling and the Cell Supply) System. This system services the radiation zone consisting of the surveillance and the cask handing rooms and the cells. The atmospheric air is introduced into the building by HVAC equipment located on the west side of the building. The air travels via the surveillance and the cask handling

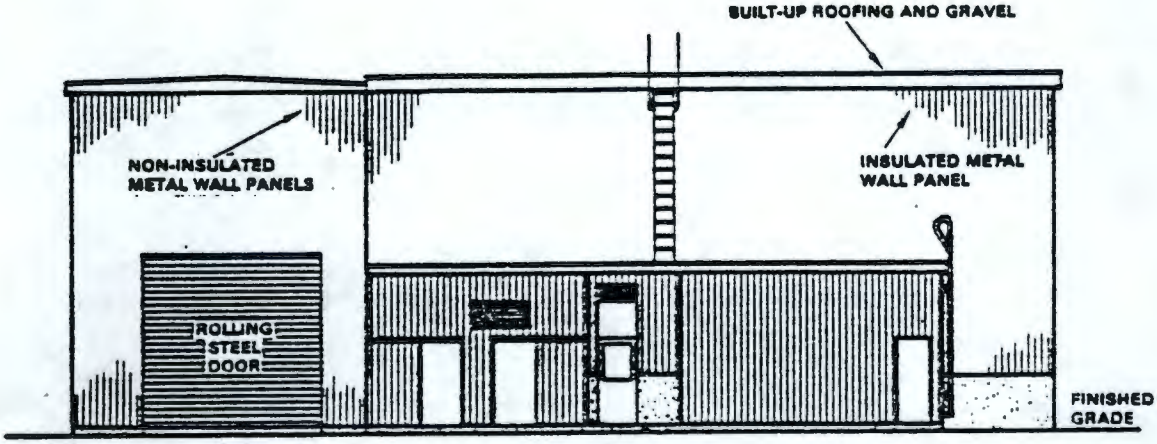


EAST ELEVATION

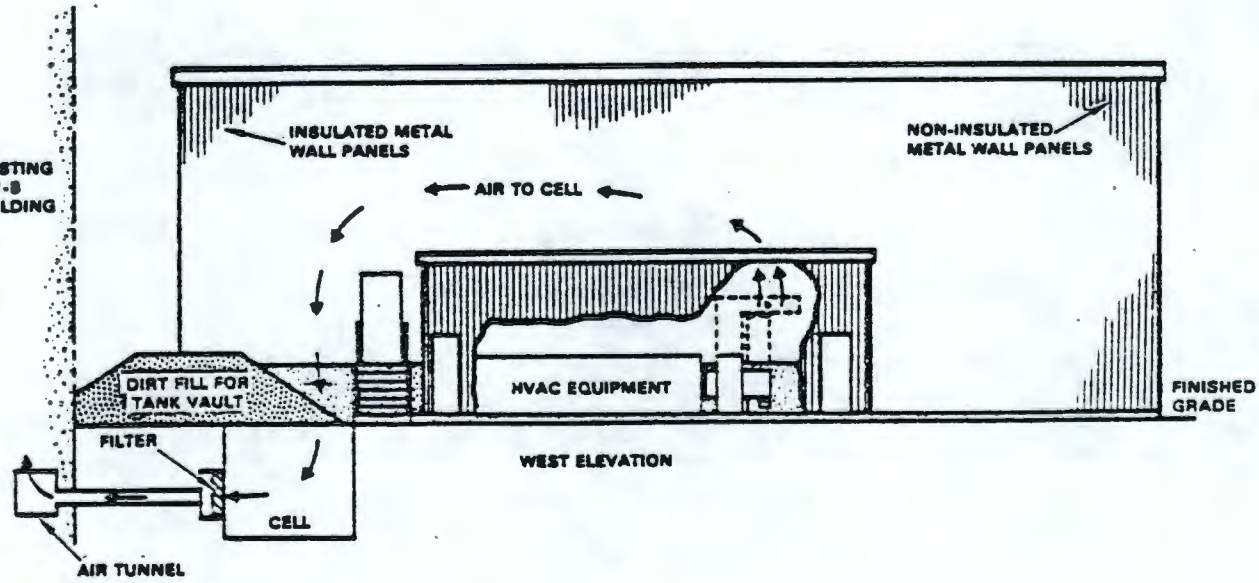


WEST ELEVATION

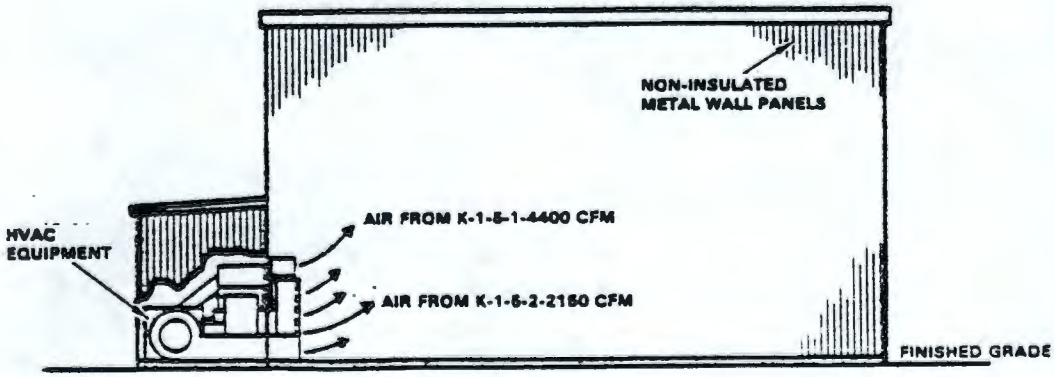


SOUTH ELEVATION

212-B BUILDING AIR FLOW

PS8501-40

FIGURE 5-20. The 212-B Cask Station Ventilation System.

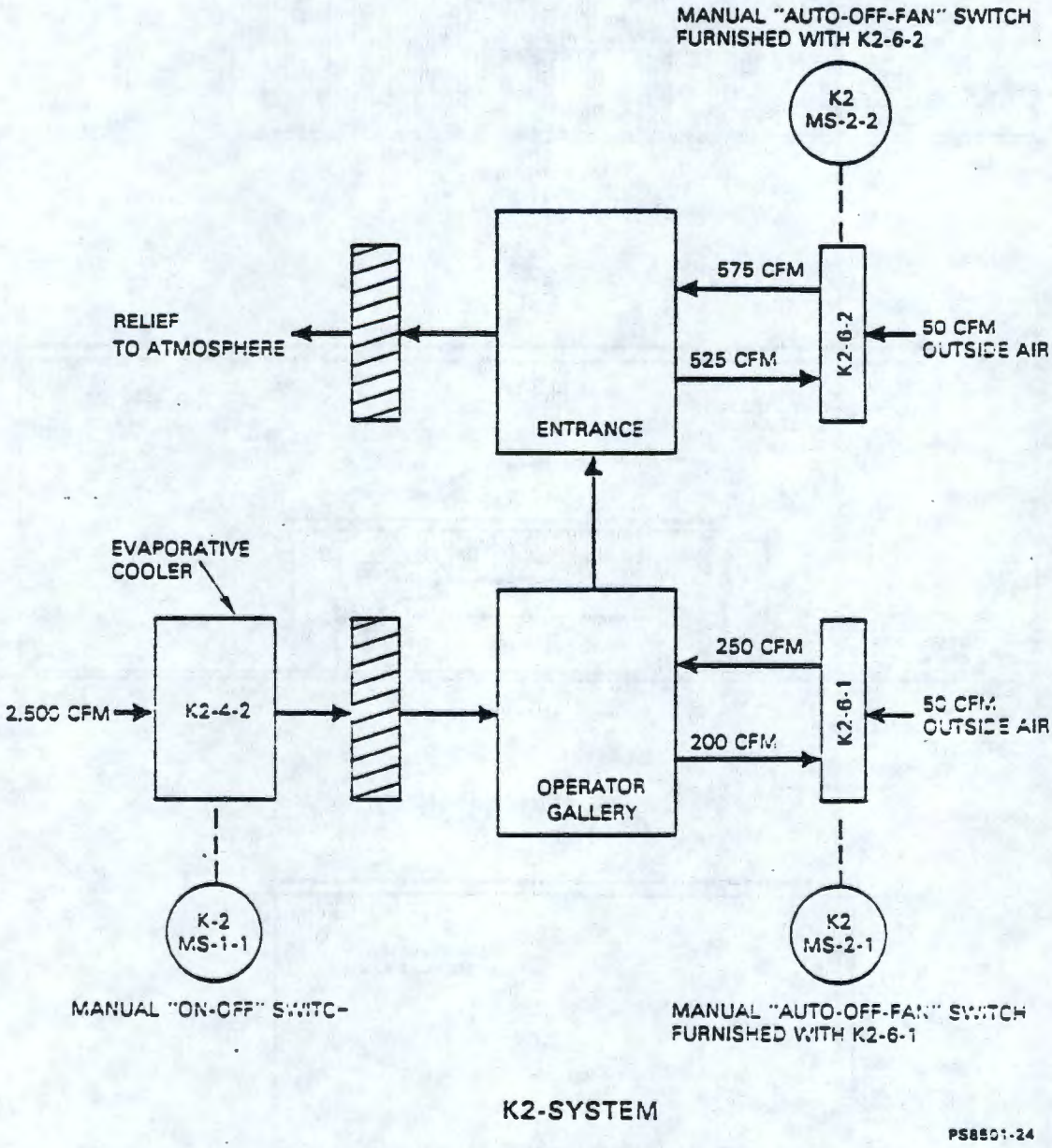


FIGURE 5-21. 212-B Operating Gallery and Entrance Ventilation System: The K2 System.

areas to the north end of the building where it is drawn into the cell and exits the building through ducts from the cell to the 221-B air tunnel.

- Sequence of Operation (Fig. 5-22). Either one or both systems operate depending on the season, summer or winter, or the cover block removal operation. To operate the system during summer (fan K1-5-1), the switch is moved to "start" from 'off' position and held there until the system operation is stabilized closing the pressure switch PS-1-1 interlocks. Then the main switch (MS-1-1) is moved to the "run" position.

  With the Main Switch (MS-1-1) in either "start" or "run," the centrifugal fan (K1-5-1), the evaporative cooler circulating pump and the electro-pneumatic switch (ES-1-1) are energized. With the electro-pneumatic switch (ES-1-1) energized, instrument air is supplied to flow damper (FDM-1-1) which pneumatically operates the flow damper to open or close. The room temperature controller (TIC-2-1) signals time proportioning switch (TPS-1-2) through an electric relay (IK-1-4) and the electric coil (K1-3-1) to maintain a room temperature setting. The duct temperature controller (TC-1-1) signals time proportioning switch (TPS-1-1) through an electric relay (IK-1-4) and the electric coil (K1-3-1) to maintain minimum air temperature of 45°F. A pressure transmitter (PX-1-1) senses the duct velocity pressure and modulates the radial damper motor FDM-2-1 through the pressure control (PC-11) switch. The temperature switch (TS-2-1) opens to stop the evaporative cooler circulating water pump so as to maintain the incoming air temperature below 60°F.

  The winter operation is similar to the summer operation but without evaporative cooler or static pressure control.

### 5.4.4 291-B Exhaust Ventilation System (Ref. 5-16, 5-17)

There are two electric-motor-driven fans used during normal operation and a steam-turbine-driven fan is on automatic standby. They are ducted for parallel operation.

5.4.4.1 Electric-Motor-Drive Fans (Fig. 5-23). Two centrifugal fans, each capable of delivering 37,500 $ft^3$/min at the rated condition of 11.5 in. (SP), 1175 rpm and 70°F, are used in the exhaust ventilation system. The maximum operating temperature of the fan is 125°F. The fans are directly driven by 440 V, 100 hp motors.

Each fan is provided with an inlet and outlet seal damper requiring a minimum of 65 psi process air to open. These fans are also provided with a radial throttling or modulating damper that takes a mechanical spring-loaded action to adjust the damper for the required exhaust flow. This damper is actuated through process air by the canyon-to-atmosphere differential

THIS PAGE INTENTIONALLY
LEFT BLANK

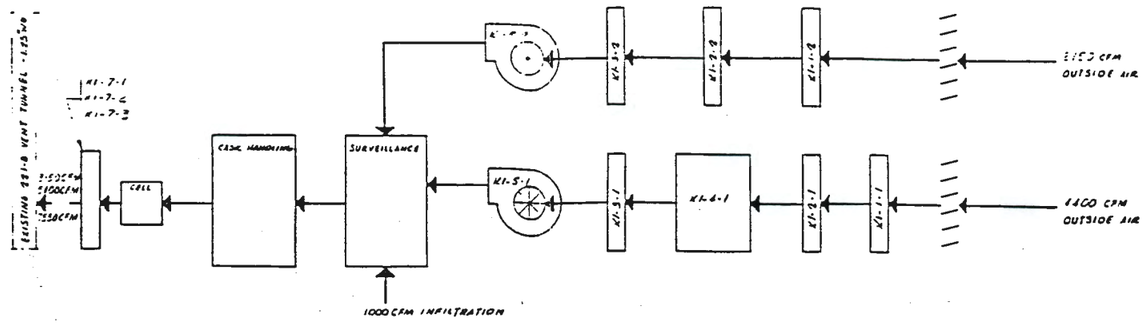


KI-SYSTEM
AIR FLOW DIAGRAM

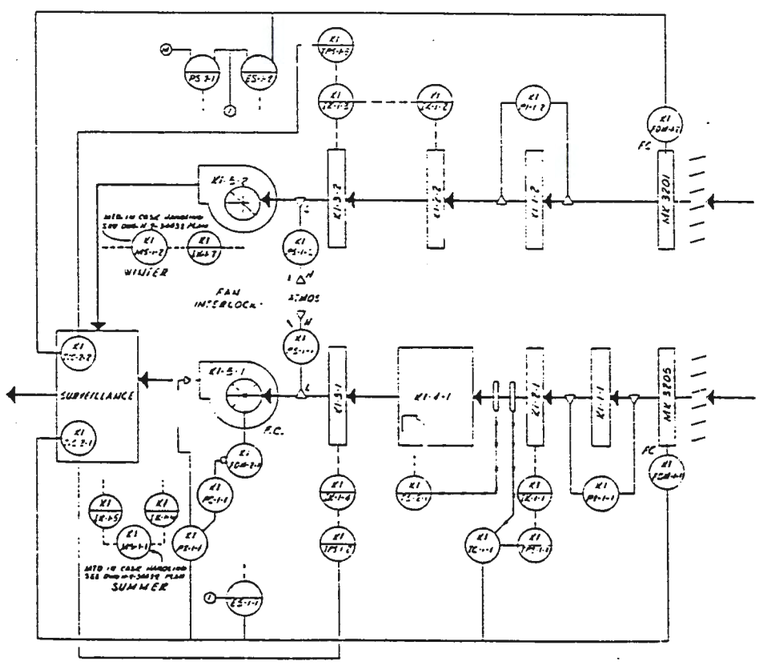


KI-SYSTEM
CONTROL DIAGRAM

| INSTRUMENTATION | | |
|---|---|---|
| LEGEND: | 1st POSITION PROCESS VARIABLE | 2nd & 3rd POSITION INSTRUMENT FUNCTION |
| C | | CONTROL |
| O | | DAMPER |
| E | ELECTROPNEUMATIC | |
| F | FLOW | |
| T | ELECTRIC CIRCUIT | INDICATOR |
| K | | RELAY |
| M | MANUAL | MOTOR |
| P | PRESSURE | PROPORTIONAL |
| S | | SWITCH |
| T | TEMPERATURE | |
| X | | TRANSMITTER |

| SYMBOLS | DESCRIPTION |
|---|---|
| | INSTRUMENT AIR |
| | ELECTRICAL LINES |
| | CAPILLARY |
| | BULB |
| | STATIC SENSING TIP |
| | MAIN AIR SUPPLY |
| | INTERCONNECT ALL PARTS WITH THE SAME NUMBER |
| | RADIAL INLET DAMPER |
| | LOCALLY MOUNTED |
| | PANEL MOUNTED (HVAC) |
| FC | FAIL CLOSED |
| | VELOCITY SENSING TIP |

FIGURE 5-22. The 212-B Surveillance, Cask Handling, and Cell Supply System: K1 System.

THIS PAGE INTENTIONALLY
LEFT BLANK

THIS PAGE LEFT BLANK INTENTIONALLY.

9312899185 9

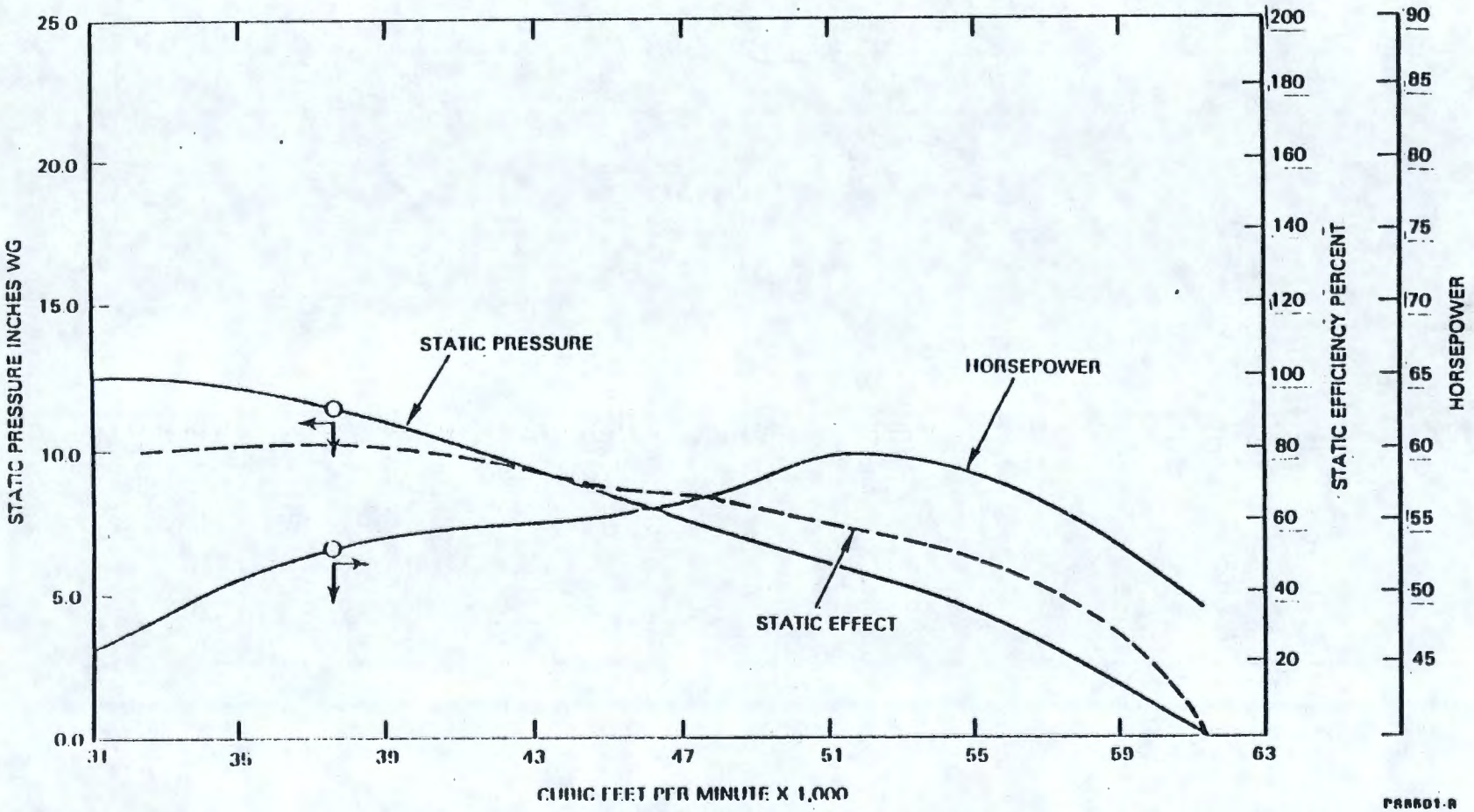


FIGURE 5-23. Fan Curves for the Electric Motor Drive Fans.

transmitter in the automatic operation mode. These dampers can be adjusted manually. The controls for the fans are located in the 291-B turbine house with the exception of the damper controls, which can be operated remotely from the dispatcher's office.

5.4.4.2 Steam-Turbine-Drive Fan (Fig. 5-24). The steam-turbine fan is the emergency fan maintained on automatic standby. This unit consists of an exhaust fan with a steam turbine drive complete with control equipment.

The exhaust fan has a capacity of 37,500 scfm at 15.4 in. (SP). The non-condensing steam turbine is designed to operate at 175 psig saturated steam exhausting at 5 psig back pressure and delivers 113 HP at 1908 rpm. The turbine speed is manually adjustable over a 12% range during operation and is capable of attaining the set speed within 20 s from standby. The turbine has an overspeed trip mechanism to protect it from damage due to high rotational speed. The turbine is set in the "auto" mode for automatic operation. In the event of an overspeed trip, the overspeed mechanism on the turbine must be manually reset for the turbine to operate normally. A blue light on the instrument panel in the dispatcher's office identifies this condition as "turbine overspeed tripped - warning - no emergency canyon ventilation until manually reset." There is no automatic canyon-to-atmosphere differential pressure control when only the steam-turbine-driven fan is on.

5.4.4.3 Canyon Ventilation Instrumentation and Control System. This section discusses the instrumentation and control required to maintain the canyon air pressure at a vacuum for contamination control through ventilation.

- Canyon to Atmosphere Differential Pressure (Fig. 5-25). This canyon pressure is the control point used to maintain a system of pressure differential to direct the contaminated air through the 291-B filter to the atmosphere. To assure this, the canyon-to-atmosphere pressure is maintained at a negative pressure of 0.2 in. of water.

  During normal operation, the canyon-to-atmosphere differential pressure transmitter, with a range of 0 to 0.4 in., constantly senses the canyon pressure and compares it to the atmosphere reference tip located above the 271-B and 221-B Buildings. The transmitter converts the canyon pressure to a proportional 3 to 15 psi signal which is received by a two pen recorder controller as a pen record, as well as transmitted by the controller section as a damper position signal to adjust air flow to maintain the canyon at a negative pressure of 0.2 in. WG. When the electric fan damper opening exceeds 95% in order to maintain canyon-to-atmosphere differential pressure exceeding -0.2 in. WG, the steam turbine will start automatically if it is in the "auto" mode. The steam turbine will automatically stop when the dampers on the electric driven fans decrease to 80% to 90% of the opening.

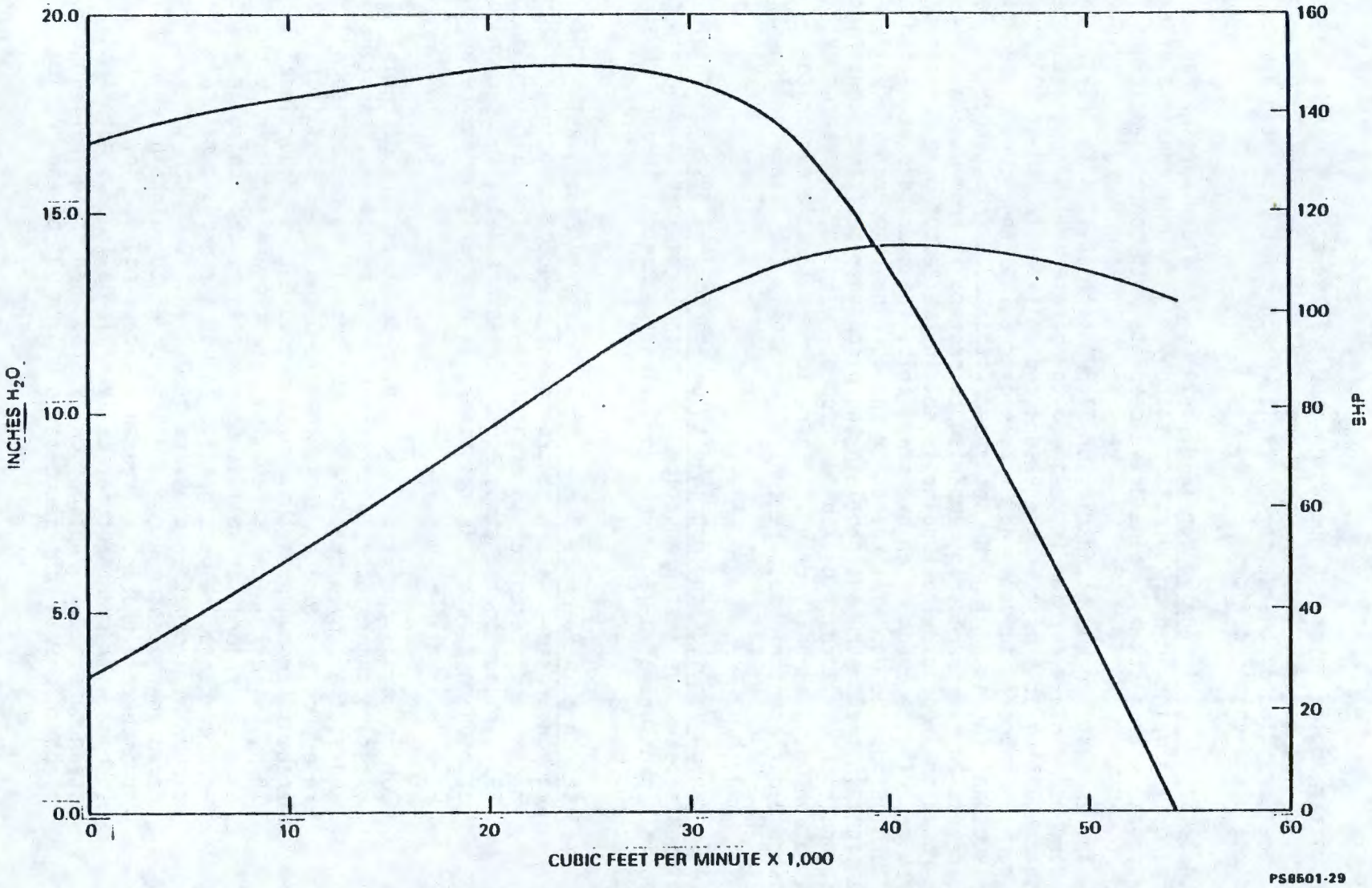


FIGURE 5-24. Fan Curves for the Steam Turbine Drive Fans.

This Page Intentionally Left Blank

THIS PAGE INTENTIONALLY
LEFT BLANK

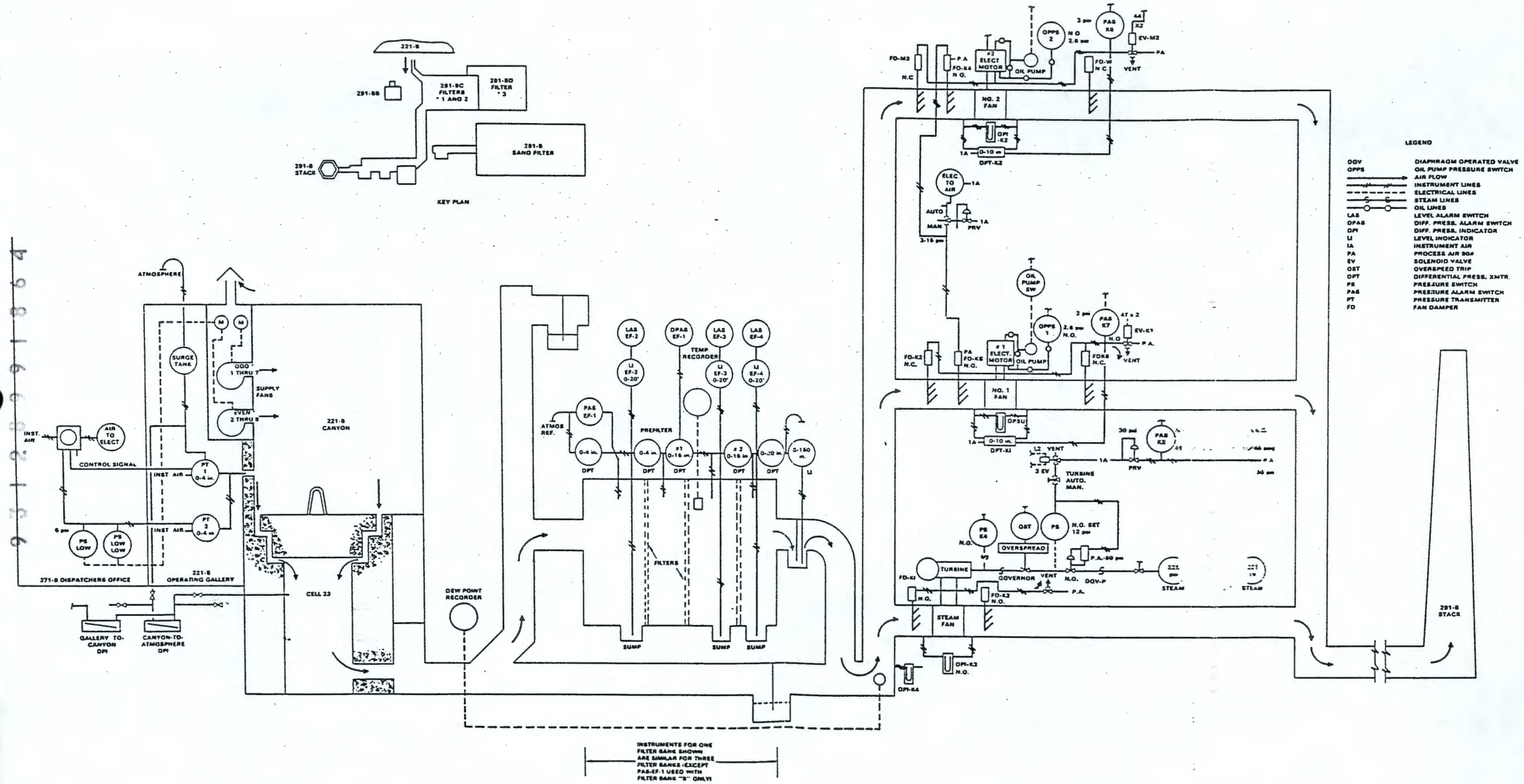


FIGURE 5-25. Canyon Ventilation, Instrumentation, and Control System.

THIS PAGE INTENTIONALLY
LEFT BLANK

THIS PAGE LEFT BLANK INTENTIONALLY.

9312291365

- Oil Pressure Switches OPP1 and OPP2--If the pressure on the lubricating oil to the electric fans drop below 2.6 psi, these switches will trip their respective motor or prevent them from starting.

- Dampers FD-K1 and FD-K2--These dampers will open on zero pressure. This is a "failsafe" control and should the air supply fail for any reason, the turbine will automatically pick up the ventilation.

- Overspeed Trip--The overspeed trip (OST) mechanism protects the turbine from overspeeding. A manual reset button will shut off the steam to the turbine. The turbine will not start or run when the valve is in a tripped position. The switch (OST) indicates the position of the butterfly valve. When this valve is closed, the switch causes an alarm to sound and light to flash on the dispatcher's board indicating that the turbine operated fan is unavailable for ventilation.

- Canyon to Operating Gallery Differential Pressure--Another feature of the control system is canyon-to-operating gallery transmitter which senses and converts the differential pressure to a 3 to 15 psi signal. This signal is transmitted to a two pen recorder and the pressure switches which drop the supply fans of the canyon in two groups. Low signal at -0.05 in. WG takes out one set of supply fans and low low signal at -0.01 in. WG takes out the other set. These signals also initiate audible warning alarm sounds in the dispatcher's office. The fans cannot be restarted until the gallery to canyon differential pressure is -0.06 in. WG.

- Differential Pressure Across Fan--The differential pressure across the electric fan is also available as a control mechanism. A signal is transmitted by a differential transmitter, calibrated zero to 10 in. to the motor switches. The fans will trip if the differential pressure should drop below 2 in. WG. The steam-turbine-drive fan, if set in the "auto" mode, will pick up the load if the electric-motor-drive fans trip either due to the fan damper failure caused by instrument air pressure drop below 65 psi or the air supply to the control panel instrument decreases to less than 15 psi.

- Exhaust Air Temperature--Each filter is equipped with a thermocouple located near the filters. In addition, there are thermocouples located in the filter ducts and two installed in the wind tunnel manhole near R-3 canyon entrance. The temperatures of these thermocouples are recorded on a 12 point Foxboro range zero to 300°F chart recorder located in the bottom right hand panel in the dispatcher's office.

  A temperature rise on any of these points gives a blinking light alarm on "hi temperature filter and tunnel" located at top of right hand panel in the dispatcher's office.

An unusually high temperature on these thermocouples could be an indication of a fire in the duct or the filters. In fact, a temperature rise probably is the most reliable warning of a fire, prior to an actual filter breach, that is observable.

- Fan Bearing Temperatures--The two electric fans have inner and outer motor bearings; whereas, the steam turbine has a fan end and turbine end fan bearings.

  These 10 bearings and the ambient temperature are monitored by the thermocouples. The difference which is an estimate of the temperature caused by the bearing friction heat, is recorded on a multipoint recorder in the 291-B Building.

  The recorder is a zero to 200°F range with a scale reading of zero to 100 divisions. The operator observes the recorder in 291-B each shift, dates the chart, and initials it. Only those bearings giving a reading above 40 scale divisions are identified and recorded on the daily check sheet. A reading of 50 on the scale (100°F) is the temperature at which the recorder alarms in the dispatcher's office. The alarm requires an investigation into the situation.

- Relative Humidity--The mixture of air which has passed the filters is monitored by a Dew cell probe located in the inlet duct to the exhaust fans. The percentage relative humidity is read on a recorder located in the top of the Cell 22 A operating panel in 221-B. The recorder reads directly negative percent relative humidity.

  Readings greater than 85% relative humidity are called to the attention of supervision to allow location of the source of excess moisture.

### 5.4.5 291-B Fan House

The south wall has two 440 V disconnect switches for fans 1 and 2 and to the right of this is the motor starting panel with "stop/start" switches for the oil pumps and the electric fan motor only. Underneath this panel are the disconnect switches for the oil pumps. On the west wall is a fan and motor-bearing-temperature recorder with 0 to 100 scale with a temperature range of zero to 200°F.

- Main Instrument Panel--The main instrument panel contains the following instruments and warning lights:

  Four warning lights reading left to right

  Canyon exhaust duct static pressure rise from 221-B

  Steam turbine valve open.

Instrument air failure.

Exhaust dampers closed--Number 2 electric.

Exhaust dampers closed--Number 1 electric.

- Fan Output Pressure--There are three manometers for measuring the differential pressure across the fans.

- Electric Fan Modulating Damper Control--A sub panel painted green contains instruments to place the modulating radial damper controls in either manual or auto modes of operation. The panel contains 0 to 30 psi air gage with an arrow indicator for the position of the dampers between the open and closed position.

- Steam Turbine Fan Control--The turbine-driven fan on standby in the automatic mode will start on the loss of the electric fans and/or the duct pressure rises above -4 in. WG.

  The turbine-driven fan will continue to operate even after the duct pressure is reduced below -4 in. WG until the holding relay is reset. Reset is accomplished by moving the turbine mode switch back to "Auto" position. This will not restart the turbine providing electric fans No. 1 and 2 are operating properly and the duct pressure is below -4 in. WG.

5.4.6 Safety Consideration and Control

5.4.6.1 Routine Testing of Automatic Operational Features of the System. Certain functional tests are performed bi-weekly on the day shift to ascertain and assure the proper functioning of the automatic operational feature of the ventilation system. These functional tests include the following simulation.

- Steam Turbine--On automatic startup of the steam turbine fan on a simulated loss of electric power or air pressure, the fan speed is adjusted, if needed, and proper operation of the overspeed is verified. The electric fans are started while the steam turbine fan is running to determine the proper shutdown of the steam turbine.

5.4.6.2 Routine Surveillance of the B Plant Ventilation System. The daily check sheet is filled once each shift and collected data is reviewed by the shift supervision for any deviation from the normal. The following information is required on the check list.

- Exhaust Fans--The fan differential pressure, dew point temperature at inlet to the fans, the damper control air pressure, oil flow to number 1 and number 2 electric fans, and the bearing temperatures of the fans, motor and the turbine are recorded.

- Filter Cells--The liquid levels of the inlet, intermediate and exhaust sumps and the inlet and outlet seals, the differential pressure across prefilters, first bank, second bank, and the inlet and exhaust duct to atmosphere differential pressure, as well as the air temperature between the filters are recorded.

- General--The relative humidity of the air stream, the canyon to atmosphere differential pressure (inches of water), the operating-gallery-to-canyon (inches of water) differential pressure, and the total number of fans operating are also reported on the check sheet.

5.4.6.3 Loss of Instrument Air to 291-B Exhaust Ventilation System. Instrument air is used in the 291-B exhaust ventilation system for a variety of pneumatic instrumentation including pressure indicators, recorders, recorder controllers, transducer, operation of inlet modulating dampers on the two electrically driven exhaust blowers, and closure of the inlet and outlet seal dampers of the standby steam turbine driven fans during normal operation of the two electrically driven fans. Loss of air to the 291-B ventilation system would result in the closure of the modulating dampers on the electrically driven fans since these dampers are spring loaded requiring air to open and effectively modulate to maintain the desired negative pressure within the 221-B Canyon. The seal dampers on the turbine driven blower are spring loaded to open but require a minimum of 65 psig air pressure to effect closure. Upon loss of air the seal dampers open and the turbine-driven fan starts, thus maintaining continuity of canyon ventilation exhaust capability. The canyon ventilation control system automatically, upon loss of canyon negative pressure, shuts down the supply system fans maintaining sufficient canyon negative pressure with respect to atmosphere and the operating galleries to avoid spread of contamination.

5.4.6.4 Loss of Air Supply to the Canyon Differential Pressure Control System. The canyon differential pressure control system is located in 221-B Building and is operated from the instrument air system. If the air to this system is lost without a simultaneous loss of compressed air to the 291-B exhaust ventilation system, the modulating dampers on the electrically driven fans will open fully and the steam-turbine-driven fan will be activated. The normal exhaust air plenum vacuum is less than 8 in. WG with the operation of two electric-motor-driven fans. In the event that all the fans are operated simultaneously, the exhaust air plenum vacuum could exceed 10.5 in. WG. The consequences of such an event could result in a higher pressure drop across the filter because of the higher flowrate created by three fans operating.

The increased pressure drop can be detrimental to filter efficiency if sufficient deterioration of the filter media has already occurred due to moisture or radiation damage. Loss of filter efficiency can readily be detected by the stack radiation monitor. The loss of air supply to the canyon differential pressure controller is not considered to create a significant hazard.

5.4.6.5 Loss of Exhaust Ventilation Function. Loss of exhaust ventilation function can be caused by: loss of all three exhaust fans, simultaneous loss of steam and electrical power to the three exhaust fans, collapse of the brick liner of the stack plugging the exhaust, loss of the 221-B Building exhaust plenum, or breaching of the sand filter inlet and fan inlet plenum.

The postulated effect of loss of the ventilation function on the 221-B Building will most likely be reversal of air flow from the process cells to the canyon due to convection. The areas in the canyon over the process concentration cells will be most susceptible to contamination spread due to thermal gradient between the cell and the canyon. Based on past experience and present conditions in the cells, it is estimated the canyon can be contaminated under normal operating conditions to levels of 20,000 cpm with many spots at 20 to 50 mrads/h and a few spots as high as 20 to 50 rads/h should the ventilation outage extend in excess of one hour. Should a ventilation outage occur during a process shutdown mode, some contamination spread could occur in the canyon; however, the magnitude will be much lower.

## 5.5 HIGH-EFFICIENCY PARTICULATE AIR FILTER SYSTEM

The B Plant (Ref. 5-21) fourth filter cell (in use) and fifth filter cell (ready to be made operable) currently in use each have a capacity of 75,000 $ft^3$/min of air, and are constructed to operate in parallel with the A, B, and C filter cells. The cell structure is constructed of reinforced concrete and the concrete and structural steel exposed to the exhaust air stream are painted with corrosion resistant paint.

The filter cells are equipped with two banks of 85% NBS prefilters and three banks of HEPA filters. The two prefilter banks and the first HEPA filter bank incorporate design features permitting the upper one quarter of the filter bank to be lowered. The remaining three quarters of the filter banks remain fixed. This feature permits bypassing of a filter bank or banks should excess pressure drop occur due to filter loading. The final two HEPA filter banks are permanently mounted.

A stainless steel 12-by-12 mesh fire screen is installed approximately 4 ft upstream of the first prefilter bank. Each prefilter and HEPA filter unit is equipped with a stainless steel 12-by-12 mesh fire screen downstream of each unit.

Each individual prefilter (bag type) of both the prefilter banks is equipped with sheet metal separators coated with (Ref. 5-22) intumescent paint to retard propagation of any potential filter fire to other filters in the same bank. The intumescent paint is one which absorbs heat through the mechanism of forming air bubbles, providing an insulating barrier on the surfaces of the metal separators, and thus insulating one filter from the other (Ref. 5-23, 5-24).



9312-8991-8700

Temperature elements are installed in the filter inlet air stream, between each bank of filters, and in the outlet air stream. Temperatures are recorded in the new filter instrument building 291-BF with a preset high temperature alarm signal located in the B Plant dispatcher's office. Liquid level indicating instruments housed in the 291-BF Building are provided for each filter sump and the filter outlet seal. A high level sump and seal alarm signal are provided in the dispatcher's office. Differential pressures across individual filter banks and across the new filter system are recorded in 291-BF Building with a preset high alarm signal transmitted to the dispatcher's office.

Access ports and sample ports are provided for:

- Testing of the filter in accordance with ANSI Standard N 101.1
- Obtaining representative air samples after each filter bank
- Insertion of radiation instrumentation for assessing radionuclide accumulation on filters.

The seal water is supplied from a heat-traced and insulated storage tank with 3,700-gal capacity. The filter seal is filled by gravity discharge of the storage tank contents through a motorized butterfly valve, which is activated at the B Plant fire alarm relay panel.

### 5.5.1 Standby Filter Cells (A, B, C, and Sand) (Fig. 5-26 and 5-27)

Ventilation air from the 221-B Building canyon, Vessel Vent 1 and 212-B is exhausted through filters before being discharged to the atmosphere. There are five existing high efficiency particulate air (HEPA) filter cells and a sand filter. The sand filter, which was built in 1948 to serve the plant when it was operated as a plutonium separation plant, is on emergency standby and the air flow is automatically diverted to it in the event of a fire in the process cells. When the plant was converted to high-level waste fractionization in 1964, the increased exhaust ventilation air requirements exceeded the capacity of the sand filter. As a part of the plant conversion, two new filter cells, each having the required increased air capacity, were constructed in parallel with the sand filter.

The first (A) HEPA filter cell, placed in service in December 6, 1966, consists of a 60% prefilter and two stages of HEPA filters. It was removed from service on December 19, 1974, when radionuclide concentration in the exhaust air stream increased significantly indicating filter failure. The second (B) HEPA filter cell was identical to the design of the first filter and was placed in service on November 15, 1968 and has ben removed from service since December 19, 1974. The B filter, after operation for the same duration of time (100 mo) as the A filter, was shut down due to a hole in the filter, suspected "wetting" of the filter, and a suspected degradation of the glue and gasket material from sustained radiation exposure (Ref. 5-18, 5-19). The long filling time (30 to 45 min) of the water seal

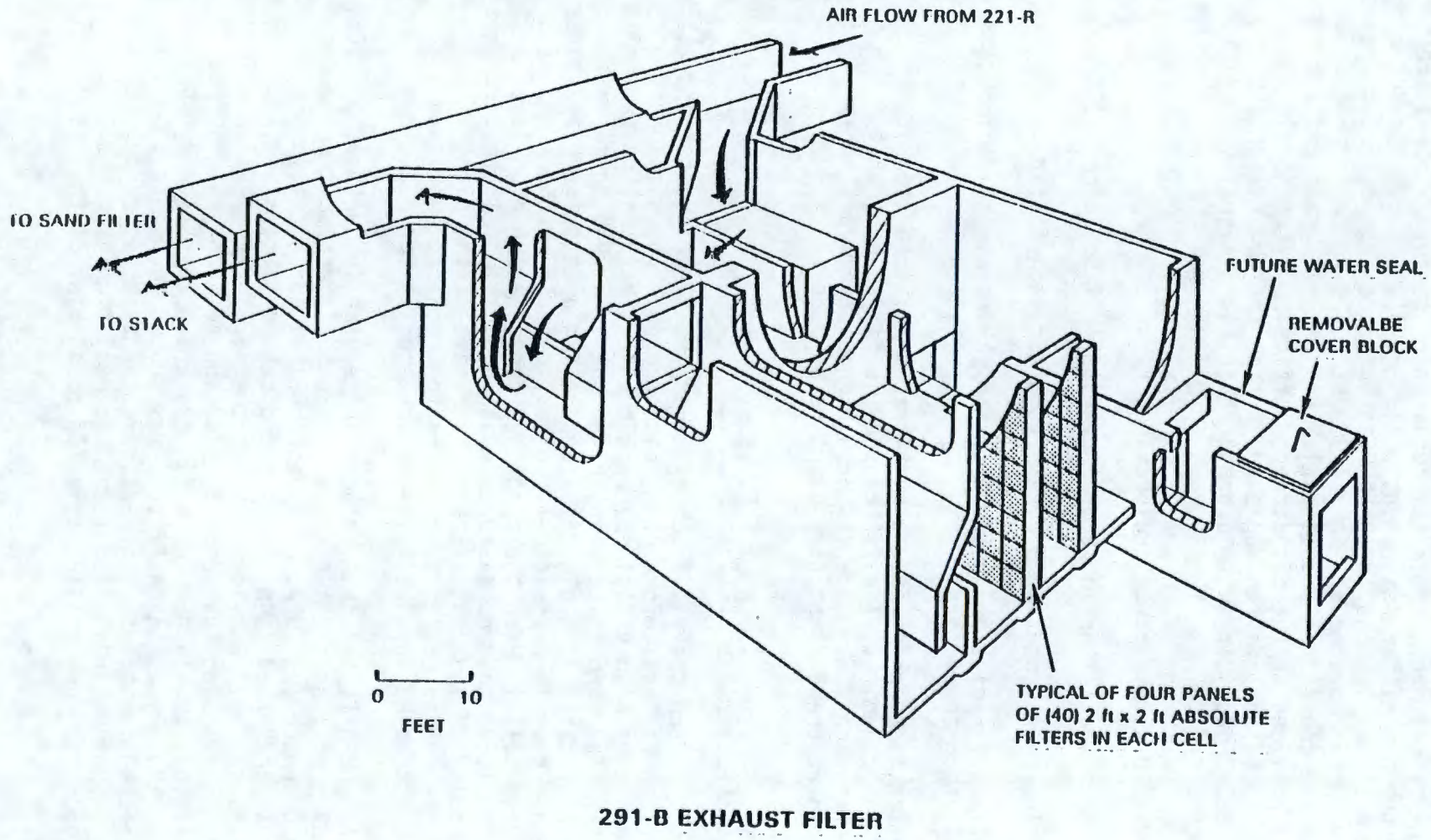


FIGURE 5-26. The 291-B Exhaust Ventilation System A and B Exhaust Filters.

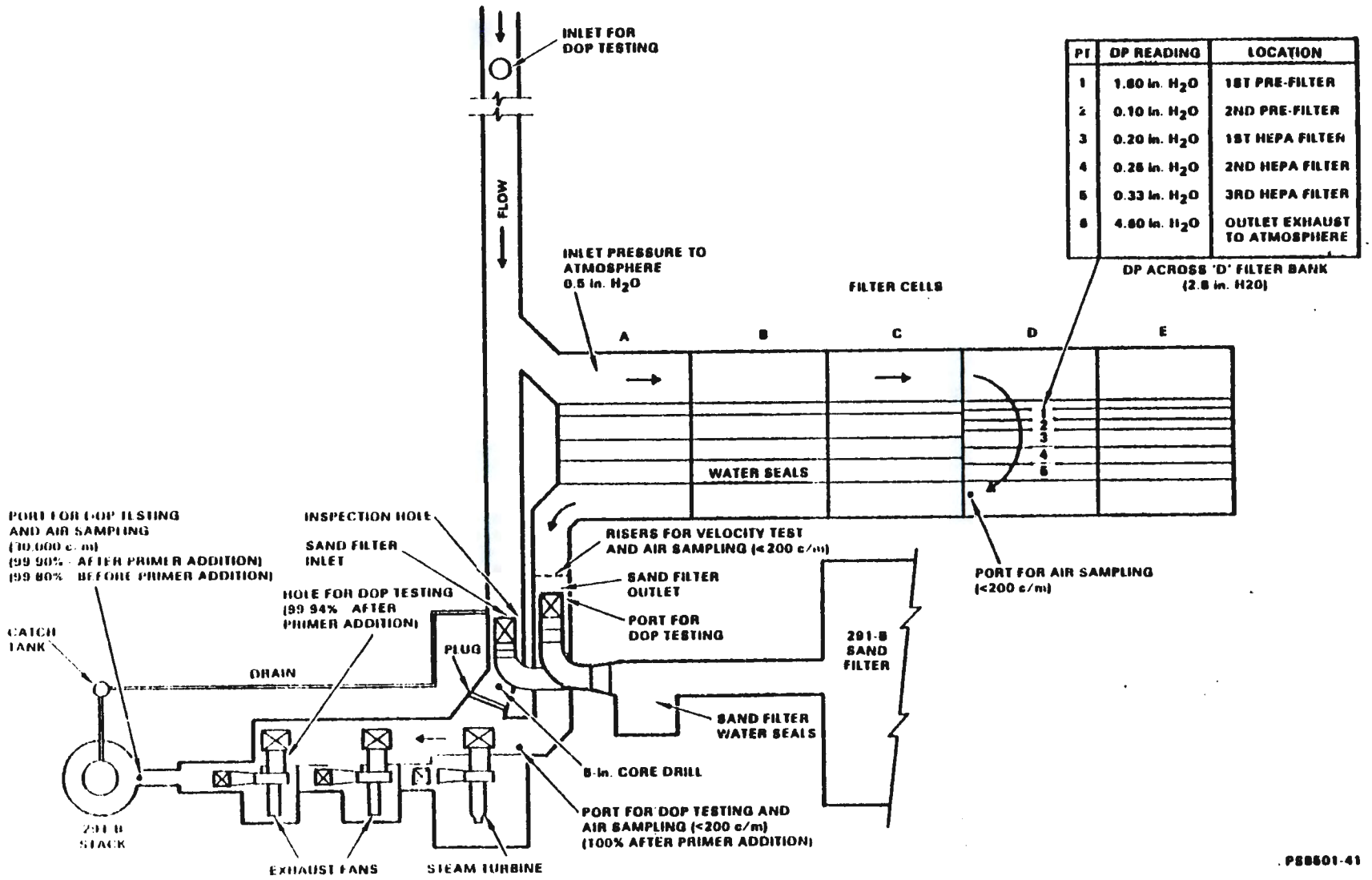


| PT | DP READING | LOCATION |
|---|---|---|
| 1 | 1.60 in. $H_2O$ | 1ST PRE-FILTER |
| 2 | 0.10 in. $H_2O$ | 2ND PRE-FILTER |
| 3 | 0.20 in. $H_2O$ | 1ST HEPA FILTER |
| 4 | 0.26 in. $H_2O$ | 2ND HEPA FILTER |
| 5 | 0.33 in. $H_2O$ | 3RD HEPA FILTER |
| 6 | 4.60 in. $H_2O$ | OUTLET EXHAUST TO ATMOSPHERE |

FIGURE 5-27. Exhaust Ventilation System Location of Inspection Holes and Port for DOP Testing.

as a probable factor in the accidental release was also considered. The C filter operated for 80 mo (through 1977) and the last 33 mo without a prefilter, thus altering the dose reported in Section 5.5.4.

The source terms reported in Ref. 5-20, especially for filter Cells B and C, may be well below the realistic numbers. The third (C) filter cell, placed in service on February 15, 1972, consists of a 90% prefilter which was designed to be replaceable and two stages of HEPA filters. The roughing prefilter screen is divided into three sections. Each section is housed in a metal frame containing 25 units of Cambridge Filter Company HIFLOW AEROSOLVE glass fiber bag filter (a 24 in. x 24 in. x 23 in. filter with a 93-97% ASHRAE atmospheric dust rating) preceded by a 24 in. x 24 in. x 2 in. glass fiber pad (8% ASHRAE atmospheric dust rating). Each roughing filter is housed in an individual metal frame. The prefilter was never replaced because of a large accumulation of radioactive particulates and the resultant high radiation exposure. Eventually due to excessive pressure drop across the prefilter, it failed in February 1975. The fourth (D) HEPA filter cell completed in December 1975 is currently on line. Filters four (D) and five (E) are identical cells constructed of reinforced concrete as an extension to three existing A, B, and C below grade concrete cells equipped with prefilters and HEPA filters.

### 5.5.2 Water Seals on Inlet and Outlet of Filter Cells

The B and C Filters are the only filters with inlet seals, but every filter has an outlet seal. The inlet seals provided isolation of the future filter system, but currently this isolation is provided by a concrete plug. The outlet seals are the only seals that can be filled and still keep any contiguous filter bays in service. Filter Cell "D" is in service and thus all outlet seals are filled except the outlet seal of the filter "D".

The water for filling the inlet and outlet seals on the filter cells is supplied to concrete valve pits. In each pit there is a valve on the water supply line and a valve to the respective seal fill line. A rubber hose line with quick disconnect fittings is provided for connecting the supply to the fill line, and is always disconnected when not in use to prevent inadvertent addition to the wrong seal or potential flooding through leaking valve. During freezing weather, electric space heaters are installed in each pit to keep the water lines from freezing. The valves in the fill line are locked in a closed position.

The inlet and outlet seal pits also contain the steam supply and discharge lines for the seal empty-out jets. Control valves for the steam to the jets are located outside the pits with a combination blank and orifice plate installed on the upstream end of the valve which is normally blanked when the jet is not in use. The discharge line from each jet has a downstream ball valve, which is locked out when not in use.

### 5.5.3 Operation of Jets for Seals and Sumps

Jet controls are located in a concrete pit identified as filter sump and instrument pit with valves for manually controlling the steam jet located inside the pit and blanked when not in use. The discharge line from each jet has a check valve which is also kept blanked when not in use. An exception to this is made on the intermediate sump jet on the number one system which has been used more frequently. (It is located in the middle position on the west side of the pit.) Instead of installing blanks, the steam valve to the jet and the ball valve in the discharge line are kept closed and locked when the jet is not in use. When operating any of the jets in this system, the sump and seal weight factors are observed for possible backflow through the discharge interties. Also, care is exercised in operating the jet so that the jet is not sparging rather than jetting. One method of determining this is to watch for any condensate buildup in the sump weight factor reading. The increasingly higher buildup of radiation through the concrete floor from radioactive material buildup on the filters makes removal and reinstallation of these blanks undesirable. The existing blanks are not replaced after use. A backup, portable sump jet is available, if the installed jet fails; it can be installed through an existing riser.

There are 75 gal/min jets located at 291-B for the filter inlet and outlet seals, and inlet, intermediate, and outlet sumps. The discharge from all the jets drain through a common 2 in. header system to the 221-B wind tunnel via the manhole near R-3 canyon entrance and finally to TK-10-1. Because of limited drain capacity, one jet is operated at a time. However, the valves in the pit are kept locked in a closed position as is the main steam supply valve. The depths of the sumps are approximately 16 in. and liquid levels are measured by magnehelic gages 0-20 in. located in the instrument house. However, the valves in the pit as well as the main steam supply valve, are kept locked in a closed position. The increasingly higher buildup of radiation under the concrete floor from radioactive material accumulated on the filters makes removal and reinstallation of these blanks undesirable. The existing blanks after use are not replaced.

### 5.5.4 Estimate of Radionuclide Inventory on the Exhaust Ventilation System (Ref. 5-20, Tables 5-6, 5-7)

In 1967, an evaluation (Ref. 5-22) of B Plant operations estimated that radionuclide loading on the B Plant ventilation exhaust filter system would be in the order of 100 Ci of $^{137}Cs$ and 200 Ci of $^{90}Sr$. Several other radionuclides were also included at that time, but their contribution to radiation dose measurements was considered inconsequential because of their relatively short half life, and future process feed would not include these radionuclides.

Radiation measurements obtained on the exhaust filter in July 1973 indicated filter loadings significantly higher than the predictions made in 1967. Additional radiation measurements and further analysis of the data indicated that the loading on the B Plant exhaust filter system was on the order of 10,000 Ci of $^{137}Cs$ and up to 68,000 Ci of $^{90}Sr$.

TABLE 5-6. Radionuclide Inventory on 291-B Filter Cells (Ratio Prefilter: First HEPA Filter Units-Curies).

| Cell | | $^{137}Cs$ | 90%:10% $^{90}Sr$ | Total | $^{137}Cs$ | 75%:25% $^{90}Sr$ | Total |
|---|---|---|---|---|---|---|---|
| A | max | 2,730 | 29,600 | 32,330 | 3,640 | 39,500 | 43,140 |
| | min | 2,730 | 630 | 3,360 | 3,640 | 840 | 4,480 |
| B | max | 1,750 | 19,000 | 20,750 | 2,330 | 25,300 | 27,630 |
| | min | 1,750 | 400 | 2,150 | 2,330 | 540 | 2,870 |
| C | max | 3,490 | 9,900 | 13,390 | 3,950 | 3,040 | 6,990 |
| | min | 3,490 | 0 | 3,490 | 3,950 | 0 | 3,950 |
| A+B+C | | | | | | | |
| | max | | | 66,000 | | | 78,000 |
| | min | | | 9,000 | | | 11,000 |

TABLE 5-7. $^{137}Cs$ Radionuclide Inventory on 291-B Filter Cells (Ratio Prefilter: First HEPA Filter Units-Curies).

| Cell | Prefilter | 90%:10% HEPA | Total | Prefilter | 75%:25% HEPA | Total |
|---|---|---|---|---|---|---|
| A | 2,460 | 270 | 2,730 | 2,730 | 910 | 3,640 |
| B | 1,575 | 175 | 1,750 | 1,750 | 580 | 2,330 |
| C | 3,140 | 350 | 3,490 | 2,960 | 990 | 3,950 |

From these radiation measurements taken at specific locations, with relation to the filter banks in each of the three filter cells (designated A, B, and C Cells) estimates were made of the probable radionuclide loading on the prefilters and the first bank of HEPA filters in each cell. The loading of radionuclides on the second bank of HEPA filters was assumed to be insignificant and not considered a contributor to the radiation dose measurements used to estimate the exhaust system inventory. It was also assumed that the prefilter system can remove up to 75% of the particulate material and the first HEPA bank the remaining 25% of the radioactive material. A breakdown of the amount of $^{90}Sr$ and $^{137}Cs$ estimated in each filter cell is as shown in Table 5-6 and 5-7.

The material processed in B Plant was well aged and the last acid waste processed had significant aging before processing. In addition, the rare earth fraction in B Plant processing had normally been discarded so there has not been a large inventory other than $^{90}Sr$ and $^{137}Cs$ in the plant. Therefore, due to the nature of the processes and the aging time involved, the filters did not contain any significant inventory of radionuclides other than $^{90}Sr$ and $^{137}Cs$.



9 3 1 2 8 9 9 1 8 7 6

To confirm this assumption, analyses of sump samples taken from the filter cells sumps exhibited no detectable amounts of plutonium or gamma emitters other than cesium. The approximate detection limit for other gamma emitters was approximately one curie percent (two orders of magnitude) less than that for cesium. A lithium drifted germanium, Ge(Li), detector was used at the filter cells to determine the presence of gamma emitting isotopes other than $^{137}Cs$. There were no indications of gamma emitters other than $^{137}Cs$ within the detection limits of the detector. Stated in terms of $^{137}Cs$ ratios, activities six orders of magnitude less for $^{95}Zr$, $^{95}Nb$, $^{60}Co$, and $^{154}Eu$ would have been observable. Activities two orders of magnitude less for $^{144}CePr$, $^{141}Ce$, and $^{125}Sb$ and the activity of isotopes of ruthenium at four orders of magnitude less than cesium would have been observed.

The sump samples from filter Cells A and C indicated strontium to cesium ratio of 1.86 and 1.48 to 1, respectively. The Ge(Li) detector indicated gross differences in $^{90}Sr$ and $^{137}Cs$ content between different filter areas. The maximum bremsstrahlung emissions which characterizes $^{90}Sr$ to the net gamma peak height of $^{137}Cs$ was used.

The relative abundance of $^{90}Sr$ and $^{137}Cs$ between the prefilter and HEPA filter areas of A Cell and the HEPA filter area of C Cell were essentially the same. The ratios of the bremsstrahlung emission to net gamma peak height for A and C Cells were about 2 to 1, but the ratio of B Cell was 26 to 1. Although this does not represent a direct difference in the $^{90}Sr$ to $^{137}Sr$ activity ratio, it does indicate that the $^{90}Sr$ to $^{137}Cs$ ratio for B Cell could be significantly (about one order of magnitude) higher than that for A and C Cells. Tables 5-6 and 5-7 shows $^{90}Sr$ quantities on the filters based on the above analyses (Ref. 5-20).

During previous evaluations estimated quantities of radionuclides were based on B Plant process and a dust loading of 5 lb per filter for the first filter bank and radionuclide concentration in the dust as follows:

- Dust concentrations were based on an analysis of salts collected in the primary PUREX (Ref. 5-25) exhaust filter over a period of 9 yr
- Corrections were made for differences in inert dust sources and radionuclide process inventory of B Plant versus PUREX.

### 5.5.5 Safety Consideration and Control

5.5.5.1 Radiation Damage (Ref. 5-26). The highest dose rates measured from the face of the prefilter and first HEPA filter banks with a high range TP instrument were 150 R/h (shielded .25 in. Pb) and 1,800 R/h (unshielded probe). From measurements obtained in all three cells the total inventory of radionuclides as stated previously was calculated. The maximum absorbed dose received by the first bank of HEPA filters for total length of service is shown in Table 5-8.

TABLE 5-8. Estimated Absorbed Dose (rads) High-Efficiency Particulate Air Filters in 291-B Filter Cells.

| Filter unit | Months in service | Present annual rate of absorbed dose | Total absorbed dose |
|---|---|---|---|
| A | 88 | $1.3 \times 10^8$ | $9.2 \times 10^8$ |
| B | 65 | $8.0 \times 10^7$ | $4.3 \times 10^8$ |
| C | 14 | $1.1 \times 10^7$ | $1.2 \times 10^7$ |

Essentially, all of the absorbed dose is contributed by the beta radiation sources with less than 4% being contributed by gamma emitters, primarily $^{137}Ba$. At that time these filters and their components maintained their integrity and continued to function; however, processing history in B Plant indicates that major runs for $^{90}Sr$, the primary contributor to absorbed dose of the filters, were made several years ago. More recent processing runs have been for $^{137}Cs$. The ratio of $^{90}Sr$ and $^{137}Cs$ deposits in all three filter cells with relation to their length of service also indicates this sequence; therefore, the estimate of total absorbed doses is based on current filter loadings and length of service.

Deterioration of the vessel vent systems occurred due to rapid loading of the HEPA filters when some exhausts from vessels were switched to the No. 2 vessel vent system from the number one system. The sparging of dilution air through process solution storage tank and the pressurization of centrifuges during operation are additional means of producing radioactive aerosols. The exhaust ventilation filters represent the final containment of radioactive material processed and, as such, compromising their integrity will compromise the integrity of the entire B Plant containment system.

5.5.5.2 Decay Heat Damage of Exhaust Filters (Ref 5-22). A preliminary examination was made of the potential for decay heat damage to the filters and the potential for the decay heat generated by radionuclide concentration, resulting in temperatures sufficient to ignite filters should a filter cell be isolated from the exhaust air stream. Filter Cell "A" was examined since it has been estimated to contain the largest inventory of $^{137}Cs$ and $^{90}Sr$, 3,640 Ci and 39,500 Ci, respectively (Ref. 5-27). These inventories could result in 48 W from $^{137}Cs$ and 455 W from $^{90}Sr$. Several simplifying, conservative assumptions were made.

- Strontium-90 produces about 0.0232 Btu/h/Ci and an average of 0.057 Btu/h/ft$^2$ of filter media with uniform distribution of the strontium inventory.

- Heat transfer is limited to conduction and radiation through the media and air with convection considered to be negligible.

- The large volume of air surrounding the filter banks and the large area of concrete walls were considered to provide an infinite heat sink.

- Concentration factors of 1, 10, 100, 1,000, 10,000 for $^{90}Sr$ $ft^2$ were used.

Filter media temperatures in the filter media, associated with various concentration factors, were computed and are indicated on Table 5-9.

TABLE 5-9. Radionuclide Concentration versus Temperature on Filter Media.

| Concentration factor x (0.057 Btu/h/$ft^2$) | Temperature °F on filter media |
|---|---|
| 1 | 70.03 |
| 10 | 70.3 |
| 100 | 73.2 |
| 1,000 | 101.1 |
| 10,000 | 293.6 |

The data in Table 5-9 coupled with the degree of conservatism used in the assumptions indicate that the potential for ignition of filter media due to temperatures generated by decay heat of the estimated $^{90}Sr$ inventory would be highly unlikely.

5.5.5.3 Fire In Filter Cells (Ref. 5-22, 5-28, 5-29, Table 5-10). The exhaust filter system, which is the last barrier of the confinement system, presents a potential safety hazard due to a large build-up of radionuclide inventory on the filters. Fire has the potential to destroy and release radioactive materials to the environment if it is not contained. Based upon operational history, no fire or explosion has been reported due to an electrical malfunction or the spontaneous combustion of acid-impregnated flammable material, which would have destroyed the final filters in the ventilation exhaust systems of the shielded cells. Thus, the creation and transport of a smoldering fragment by an airstream flowing at a nominal velocity of 150 ft/min and depositing on any one of the filters is a low-probability event but, because filters have been destroyed in glove box fires and test results indicate the potential for similar accidents in shielded cells exists, it needs to be considered in the protection of filters from credible fires.

The probability of a fire occurring in the B Plant exhaust filter has been estimated based on Hanford experience (Ref. 5-1). Three fires in the ventilation and filter system of processing facilities at Hanford have been recorded over the past 30 yr. In all cases, no filter failures or resulting environmental impacts resulted from these fires. Conservatively estimating that an annual average of 100 process ventilation systems were operative

TABLE 5-10. Information on Filter Fire.

| Confinement barriers | Filters | | | | |
|---|---|---|---|---|---|
| | A | B | C | D | Sand |
| Pre-filter | | | | | |
| No. 1 | A(P) | A(L) | A(F) | A(P) | X |
| No. 2 | X | X | X | A(P) | X |
| HEPA Filter | | | | | |
| No. 1 | A | A | A | A | X |
| No. 2 | A | A | A | A | X |
| No. 3 | X | X | X | A | X |
| Seals | | | | | |
| Loss probability | P(E) | P(E) | P(E) | U | P(E) |
| Recovery time (N) | 1 | 1 | 1 | 1/6 | 1 |
| Filter contamination sources[a] | | | | | |
| Cesium (Ci) | | | | | |
| Possible | 291 | 437 | 582 | B | X |
| Probable | 109 | 163 | 218 | B | X |
| Strontium (Ci) | | | | | |
| Possible | 3,160 | 4,740 | 6,320 | B | X |
| Probable | 1,185 | 1,778 | 2,370 | B | X |
| Fire spark probability | P(1) | (P(2) | P(3) | P(4) | X |
| Fan capacities ($ft^3$/min) | | | | | |
| 1. Electric | 45,000[b] | | | | |
| 2. Electric | 45,000 | | | | |
| 3. Steam | 26,000[c] | | | | |

NOTE: The following key explains the notations in the A, B, C, D, and sand filter columns.

| Key | |
|---|---|
| A | Available |
| B | Filter currently in use--inventory to be determined when necessary. |
| P | Probable Event. |
| X | Not Applicable. |
| U | This filter is currently online. The time taken is the time for automatic switchover to sand filter. |
| (E) | Equal |
| (F) | Failed |
| (L) | This filter was shutdown because of leakage. |
| (N) | N is 1 to 4. The probability of a spark reaching filter "A" is more than reaching filter"D" due to barriers existent between the duct and the path through the dry seals to "B", "C," and "D" filters. |
| (P) | Prefilter lowered. |

[a]Estimated values. These values should be modified to reflect actual data from the current readings of the filters.

[b]These two electric fans cannot be operated separately.

[c]Recommended operating flow to prevent fluidization of sand 26,000 $ft^3$/min).

during the 30 yr, the probability of a fire in a filter system is estimated at $10^{-3}$/plant year. However, assessing the magnitude and preventive controls imposed during the span of years, a probability of less than $10^{-4}$/yr can be assigned to postulated B Plant fires.

Table 5-10 presents the condition of the filters. The catastrophic event of the loss of all seals along with a simultaneous fire in all filters and the operation of the electrical fans is not deemed possible. Thus, the design basis fire should include the following:

- Filter with the maximum radionuclide inventory available for release
- Loss of the exit seal of the filter with the fire
- Maximum delay to fill the exit seal
- Maximum delay to divert the airstream to the emergency sand filters.

5.5.5.3.1 Factors Affecting Availability and Transport of Radionuclides. The fire resistant HEPA filter, in both steel-and wood-cased construction, is designed to withstand air temperatures of 700 to 750°F for at least 10 to 15 min without serious degradation of function so long as air flow is maintained (Ref. 5-11). However, a rapid decrease in the tensile strength of the medium occurs at 450°F and extended exposure to temperatures above 800°F will cause destruction of wood-cased filters and warping of the steel-cased filters. A degradation of the filter fiber occurs leaving pinholes in the medium. Rapid deterioration occurs at temperatures above 1,200°F. These assumptions are consistent at the beginning-of-life (BOL) and the impact of aging and the usage must be factored to provide realistic values.

Metallic cesium boils at 678°C and the nitrate and the carbonate compounds decompose in the range of 414°C to 610°C (Ref. 5-29). Local temperature excursion in the vicinity of the burning combustible material may occur but the temperature of the exhaust gases is expected to be lower due to mixing with cooler air. At least a fraction of cesium vapor would condense after leaving the extreme temperature region. Thus $^{137}Cs$ would be deposited on the first bank of HEPA filters. The potential penetration of a filter is a function of the gas temperature and reduction of gas temperature is effective in reducing the quantity of cesium that can be released.

5.5.5.4 Preventive and Mitigative Features.

5.5.5.4.1 Procedures. Procedures are used to periodically evaluate the inventory of radionuclides on the filters and reevaluate the potential hazards in light of anticipated further increases in inventory resulting from continued operations. These evaluations permit prudent decisions regarding deactivation of filter cells and scheduling of replacements in the event of a fire.

5.5.5.4.2 Cell Fire Detection System. Process cells containing organic liquids (Cells 26 through 30) and the cell drain tank (Cell 10) are equipped with dual fire detectors and a "Light Water" fire retardant foam spray system. Activation of one of the two detectors will alert operating personnel and the Fire Department of a fire. Activation of both detectors in a cell will initiate operation of the "Light Water" foam system to that cell. A fire detection system is provided in other cells to warn personnel of a cell fire. Cell sprays can be manually activated to extinguish the fire.

5.5.5.4.3 Airflow Diversion System. The 291-B exhaust filtration facilities include installed capability for automatic diversion of the exhaust air flow from the HEPA filter system to the sandfilter within approximately five minutes, installation of dual fire detectors in the exhaust air duct before and after the HEPA filter system, installation of a five gpm and 50 gpm water spray system in the exhaust air duct before the filter system and improved accessibility of water for use with filter water spray systems. The system is fully integrated with the organic cell fire protection system for automatic operation with exception of the 50 gal/min exhaust duct spray and filter cell sprays, which require manual system coupling and operation.

5.5.5.4.4 Ignition Source. Sources of ignition are minimized in the canyon and the filter cells. All electrical installations are compatible with applicable codes for the types of materials being handled.

5.5.5.4.5 Housekeeping Practices. Good housekeeping practices are emphasized in the canyon area to prevent the collection of combustible debris on the deck or in the cells, exhaust air ducts, or the filter building.

5.5.5.4.6 Fourth and Fifth Filter Cell (Ref. 5-21, 5-30).

- Design Features--Fire screens are provided upstream of the first prefilter and immediately following each bank of prefilters and HEPA filters. Fire screens do not preclude fire but provide a barrier to reduce the penetration probability of a spark to the HEPA filter.

- Isolation of individual deep bed-bag type filters--Each bag type filter unit in the two prefilter banks are isolated by metal separators coated with intumescent paint.

- Spacing Compartmentalization and Sections--The spacing between the second prefilter bank and the first HEPA filter bank is approximately five ft, an increase of two ft over comparable spacing in C filter. The filters are divided into three sections and compartmentalized in each cell. The prefilters do not preclude fire but provide a sacrificial barrier.

- Inspection--Minimum quarterly inspections of all canyon cells are conducted. Inspections are also made on all cell entries. Check sheet records are maintained with a tickler system for inspection schedules. Management inspections are conducted approximately monthly, to minimize the presence of loose combustible materials on the canyon deck.

- Sampling--All drainage to deep cell tank is sampled for organic content.

5.5.5.5 Instrument Air Failure--Instrument air use in the new filter facility is limited to liquid level detection in filter sumps, including the exit water seal sump and for determination of differential pressure across each filter bank. The loss of instrument air to the new filter is not critical to the operation.

5.5.5.6 Electrical Power Failure. Electrical power in the filter facility is required for instrumentation and services.

Instrument electrical power is supplied from the emergency electrical panel in 221-B Building for:

- Operation of instrument recorders in the filter instrument building, 291-BF, for filter temperatures, sump liquid levels, filter differential pressures and alarm signal transmission to the Dispatcher's Office, Building 271-B

- Liquid level instrumentation for the seal water addition tank

- Instrument power receptacles.

Service power is provided for:

- Electrical heat trace system on the seal water addition tank

- Instrument building exhausters.

Both the normal power and emergency electrical power systems have a history of high reliability (Ref. Table 5-28).

5.5.5.7 Loss of Water. The use of water for the filter cell is limited to the initial filling of the filter-seal-water-addition tank and any makeup resulting from evaporation. No hazards to the filter will be incurred due to loss of water.

5.5.5.8 Radiation Exposure to Personnel. The shielding design of the new filter was based on measured radiation dose levels as a function of radionuclide inventory build-up experienced in the C Filter. Since recommendation for installation of a "real-time" monitor for measurement

of radionuclide emissions to the filter has not been implemented, there is no reliable source term to use in evaluating radiation levels or shielding adequacy over the life of the filter. If it is assumed that the build-up of the radionuclide inventory in the operating filter will not differ significantly from the C Filter experience, the shielding should be adequate with the following exception. The filter design does not provide shielded plugs for the 24, 10-in. inspection ports. However, sand-filled plugs are used on C Cell.

5.5.5.9 Bypassing of Filter Banks. Sumps provided after the filter inlet fire screen and after each of the five filter banks and the filter exit seal sump are equipped with steam jets for removal of liquids. Each individual sump jet is valved and subsequently connected to a common manifold which is routed to the exhaust ventilation tunnel upstream of the filters. Improper valve operation can result in bypassing one or all of the filters and thus negating to some degree filter system efficiency.

5.5.5.10 Freezing of Filter Seal Water Addition Valve - The filter seal water addition valves are located in a pit adjacent to the seal water supply tank. No provisions are made to prevent the piping and valve in the pit from freezing and the system becoming inoperable; however, this has never caused a problem.

5.5.5.11 Flooding. The location of the filter structure with respect to water service piping, process piping systems, and cooling water drain piping creates no significant hazard to the structure should failure of one of these systems occur. The filter structure includes a built-up, asphaltic roof in compliance with Hanford Plant Standards HPS-548-AC to prevent in-leakage of precipitation. The addition of water to the filter is limited to the filling of the filter exit water seal when required to isolate the filter from the B Plant filter system. The seal water is supplied from a storage tank near the filter, to establish isolation of the filter.

Although considered remote, the overflowing of the exit water seal into the final filter section with wetting of the lower several inches of the filter media can occur under the following conditions:

- The exit seal is full
- The seal fill tank is refilled
- The seal water addition valve is inadvertently reactivated.

5.5.5.12 Filter Cell Flooding. Historically, the diversion of air from C filter cell was accomplished by the controlled batch addition of approximately 5,000 gal of water to the filter outlet seal in five minutes. The capacity of the seal is approximately 7,500 gal. In the event of malfunction of the batch controller, water could continue to be added to the filter seal, overflowing into the filter cell and wetting the lower level filters to a depth of 6 in. This piping system has since been dismantled to eliminate this risk.

No release of radionuclides should occur as a direct result of such malfunction as the flow of air through the cell is prevented by the seal.

Small quantities of radionuclides can be emitted if the seal water were to be removed and air flow reestablished through the cell. Administrative controls prevent the removal of water from the seals without a thorough review of the hazards.

5.5.5.13 Mechanical and Flooding Damage to Filtration System Due to Equipment Operations. The exhaust air duct linking the filter system and the exhaust air tunnel in the canyon is approximately 200 ft in length and constructed of reinforced concrete. It is estimated that the duct roof can accept live loads of approximately 5,000 lb/ft$^2$ which is in excess of wheel loadings for highway rated vehicles. The duct is located over nine direct buried process waste lines, a 14-in. carbon-steel cooling-water header and a 24 in. earthenware cooling-water header. Only three of the nine process lines are in use for infrequent transfers of 3,000 to 9,000 gal batches at a maximum pressure of 22 psig. The cooling water headers are gravity-flow systems located at a depth of 12 ft.

Above grade ducts, fans and other peripheral equipment are inaccessible to surface vehicles due to the terrain and equipment arrangement.

5.5.5.14 Explosions (Ref. 5-28). The incidents were, hydrogen and ammonia accumulation and explosion, and red oil explosion. Details are discussed in Chapter 9.

- Hydrogen Accumulation and Explosion--The hydrogen generation rate and postulated explosion would be no greater than postulated. The effect on the high efficiency filters is within the tolerance of the filters.

- Ammonia Accumulation and Explosion--The probability of an explosion is remote. If the postulated explosion were to occur, the high efficiency filter is not damaged.

  There should not be ammonia in the canyon ventilation exhaust system which is exhausted through the high efficiency filter; however, samples of solids and solutions from the filter cells indicates the presence of considerable ammonium nitrate. The rate of filter differential pressure buildup indicates certain plant operations or conditions may contribute more ammonium nitrate than others. The accumulation of ammonium nitrate shortens the filter life and contributes to possible problems as outlined in the fire section of this report.

- Red Oil Explosion--A review of the hazards of a red oil explosion disclosed no new information. The probability of the postulated incident is very remote because of operating conditions and safeguards. The HEPA filter system is not damaged by the postulated explosion.

5.5.5.15 Moisture Damage of The Filter Media--The prefilters and the HEPA filters installed in the filter cells are moisture resistant. Prior prefilter failures in the A and B cell filters have been attributed to use of prefilters lacking moisture resistance. Past practices of deliberately moistening filters to reduce pressure drop across them have been eliminated and operating procedures modified to prohibit this action.

The steam-actuated jets for removal of liquid from filter sumps pose a potential hazard of moisture damage to filter media. Improper valve operation or inattention during jetting operations could result in steam being introduced into the filter system.

5.5.5.16 Interaction of Filter with Existing Filter System. The design and construction are similar in configuration to the existing filter cells. The method of isolation of the filter from the system is by filling the water seal, which is similar to seals associated with other filters in the system.

There are no shared critical services which can be overloaded or interrupted. The significant interface between filters of the exhaust filter system is the activation of the filter-seal-water-addition motorized valve will be activated automatically from the fire alarm panel in the 271-B Building as a function of the existing 221-B Building process organic cells fire protection system and the supervised heat detector system located in the filter system inlet and exit air streams. Isolation of the operating filter is an integral part of the existing exhaust ventilation air diversion system which upon activation, results in the diversion of air from the HEPA filter system thru the sand filter. Operability of the motorized valve is critical with respect to air diversion when such diversion is required.

Operating procedures take into account the need for periodic testing of the seal water motorized valve to ensure operability when required.

5.5.6 Survivability of Filters Cells (Ref. 5-7).

5.5.6.1 291-BC-(A & B HEPA Filter Cells). The seismic analysis of the concrete cell indicates that the roof and its supports will survive the HRHE and SSE. The north wall, however, fails due to soil pressures generated by the seismic motion. The results predict cracking which might cause the loss of water seal and air tight integrity. Collapse of the wall would be a possibility, which would precipitate total cell collapse. The HEPA filter frames will survive HRHE and SSE motions intact, if the cells do not collapse.

5.5.6.2 291-8D-(C-HEPA Filter Cell). In the third cell, the roof and its supporting columns will survive the HRHE and SSE. The south wall panels between the pilasters will fail due to soil pressures generated by the seismic motions. The pilasters themselves are marginal. This wall failure could cause the loss of water seal and air tight integrity, and possibly collapse the cell. The filter support frames will survive the HRHE and SSE intact, if the cell does not collapse.

The 20-ft by 40-ft sheet-metal-covered building above the north end of the third cell has a structural steel frame. This frame, however, has no significant moment carrying joints. Thus, lateral stability is derived from the shear strength of the formed sheet metal skin, the "X" bracing rods, and the stability of the column anchorages to the concrete supports. The strength of the skin is unknown and is by tradition neglected. This leaves the 1/2-in.-dia. rod diagonal fixity to resist lateral forces.

The structure was analyzed for SSE motions in the east-west and north-south directions. The HRHE effects were determined by linearly scaling down the SSE results. A three-dimensional-response spectrum analysis was done using the ANSYS finite element program. The effects of any loads suspended on the overhead crane were neglected. The SSE analysis results indicated that while the member stresses are low, the column welds to the base plates would fail. The same welds would be marginal during an HRHE. The failure of these welds would mean the loss of column base fixity and building collapse. During a tornado, either the metal skin will blow off the building, or it will collapse due to a failure to the column base welds. Tornado missile penetrations would be expected.

5.5.6.3 291-8F (Fourth HEPA Filter Cell). The reinforced concrete can be expected to survive the SSE and HRHE. The steel in the prefilter frame will yield due to SSE motions, which could possibly cause the filters to leak. There is an unknown amount of support for the frame from the sheet metal filter boxes. This would tend to prevent complete collapse of the filters. The final filters will survive the earthquake except that if there is not at least 2.3 in. of water differential pressure across the filters at the time of the seismic event, the anchor bolt for the center support strut might pull out of the wall. If the strut comes loose, it would pound on the wall subjecting both the wall and filters to impact loads. Alternatively, the strut might fall away, depriving the frame of its center support. Under these conditions, the frames will be overstressed if there is more than 1.6 in. of water differential pressure. Deformation of the frame under these conditions could possibly break the filter seals.

5.5.6.4 291-8G (Fifth HEPA Filter Cell). The below-grade concrete portions will survive the HRHE and SSE intact. This cell uses the same filter support frames as the 291-8F Cell. Thus, it has the same problems with the prefilters and the possible strut failure which could lead to the HEPA filters leaking around the seals. The 5th cell also has an above-ground 4-ft by 5-ft by 8-ft-high concrete housing for the duct plug operating mechanism. This can withstand the seismic loads and the tornado winds.

Heavier tornado missiles might cause some spalling of the concrete, but would not impair its functioning. The housing has a sheet metal cap which would be subject to damage by missiles. If the cap were penetrated or dislodged, the support mechanism for the duct plug could be damaged. This could allow the plug to drop out of the position which closes the duct. The plug could be put back into the closed position except that it might be destroyed when it impacted the bottom of its travel range. This would leave only the 1/4-in. steel-plate doors closing the duct.

The first and second cells are integrated as a single below-ground reinforced structure and other cell structures below-ground were not analyzed for tornado effects since it was judged to have no significant effect on the below-grade cells.

## 5.6 SAND FILTER EMERGENCY STANDBY SYSTEM

The 291-B Sand Filter Building was constructed in 1948 for use in conjunction with the operation of the bismuth phosphate ($BiPO_4$) process. The HEPA filter cells were installed later in parallel with the sand filter. In the event that the HEPA filters system become inoperable the 291-B sand filter can be manually activated as an emergency backup by draining and filling the appropriate water seals. An intertie also exists to automatically activate the sand filter when the in-cell fire detection system is activated.

The sand filter is located 171.2 ft north and 61.5 ft east of the canyon building. The filter is connected by 5-ft-wide and 6-ft-deep stainless-steel ducts approximately 18-ft long and above grade. The filter, 110 ft long, 55 ft wide and 21 ft 1 in. high except at the west end where it is approximately 26 ft 6 in. high, is a reinforced concrete structure with a floor slab 12 in. thick at an elevation of 4 ft below grade. The roof consists of 60 precast concrete slabs, 7 in. thick, 15 ft 11 3/4 in. long and 4 ft 11 3/4 in. wide, covered with waterproofing membrane composed of layers of asphalt and fabric. The roof is supported by 12-in.-thick concrete walls and by 12 in. by 18 in. precast concrete beams upheld by two rows of 12 1/4 in. by 12 1/4 in. reinforced concrete columns spaced 10 ft apart. Figure 5-30 is a cross section of the sand filter. The floor has 7 3/4-in. by 12-in. by 16-in. hollow concrete blocks laid longitudinally and separated by 1/2-in. wood dowels for distributing the incoming air.

The sand filter is a deep (several feet thick) bed of rock, gravel and sand, constructed in layer graded with about 2 to 1 variation in granule size from layer to layer (Fig. 5-28). The collection mechanism of a sand filter is largely gravity settling and Brownian diffusion. Air flow direction is upward, and granules decrease in size in the direction of the airflow. A top layer of moderately coarse sand is added to prevent the

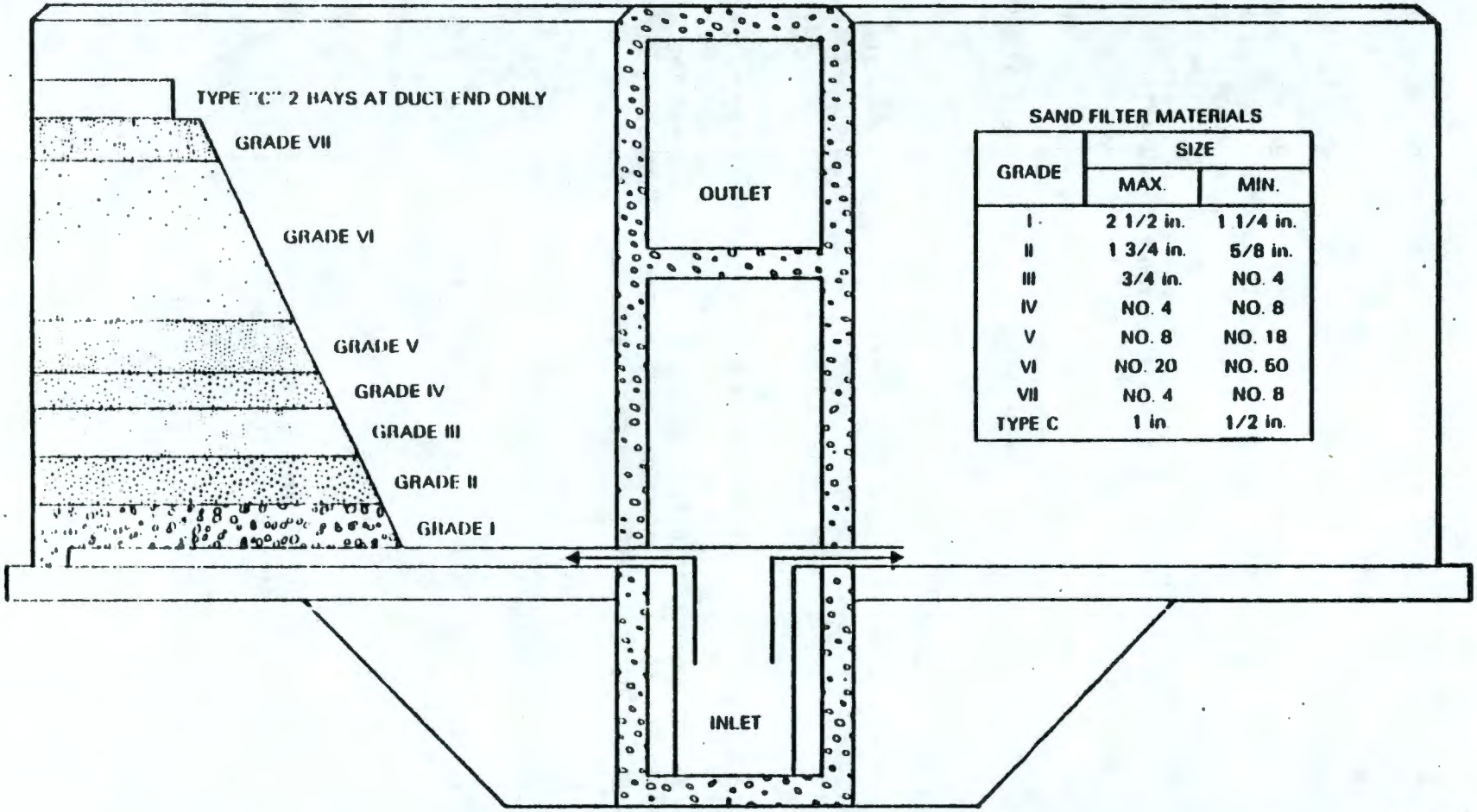


SAND FILTER MATERIALS

| GRADE | SIZE | |
|---|---|---|
| | MAX. | MIN. |
| I | 2 1/2 in. | 1 1/4 in. |
| II | 1 3/4 in. | 5/8 in. |
| III | 3/4 in. | NO. 4 |
| IV | NO. 4 | NO. 8 |
| V | NO. 8 | NO. 18 |
| VI | NO. 20 | NO. 50 |
| VII | NO. 4 | NO. 8 |
| TYPE C | 1 in | 1/2 in. |

PS8601-4

FIGURE 5-28. Typical Sand Filter Cross Section.

fluidization of the finer sand. The superficial velocity is around 5 ft/min. and the pressure drop across the contiguous layers of sand sized from grade I to grade VII (with type "C" 2-Bays at duct end only), is 7 in. WG at a volumetric air flowrate of 25,000 $ft^3$/min (H-2-1379).

The sand filter has a greater mass than the other filter types; sand is inert to most gases and only gravity is required to assure that bypassing does not occur (Ref. 5-11). Sand filters have a formidable reputation for dependability having served for 20 yr at the Redox plant and at two buildings at the Savannah River Plant. There have been two incidents of loss of filter function. Both incidents were caused by acid attack on the concrete enclosure and were repaired and returned to service.

Smoke cannot be practically removed from the exhaust gases, and the capacity of the filter to accept smoke can become an important consideration. Sand filters are nearly invulnerable to the heat of a fire.

5.6.1 Filter Test (Ref. 5-30)

The main objectives of the sand filter test was to determine the radioactivity release rate of the sand filter under shutdown conditions and to determine the flow capacity in terms of the ability of the fans to maintain sufficient canyon vacuum.

However, additional information gained by the test included filtration efficiency estimates and flow-rate, differential-pressure measurements. The sand filter test was divided into four discrete steps to prevent the possible release of excessive contamination from the B Plant stack during testing. The following four tests were performed:

- The filter was tested with sodium nuclei and atmospheric air to determine if the removal efficiency was sufficiently high to allow testing with canyon exhaust air
- The filter was operated on contaminated air in parallel with the A, B, and C HEPA bays and then in parallel with the C bay
- The filter was placed on line by itself under controlled conditions
- The filter was placed under conditions simulating the automatic switchover of the fire protection system.

5.6.1.1 Operating Characteristics (Fig. 5-29) - The sand filter differential pressure is shown as a function of the flow rate in Figure 6, and is compared to earlier data. The flow characteristics of the filter have changed as shown in the figure. The differences may easily be due to difference in flow and dp measurement instruments and techniques. However, a decrease in differential with time may be indicative of improper settling sands and void formation.

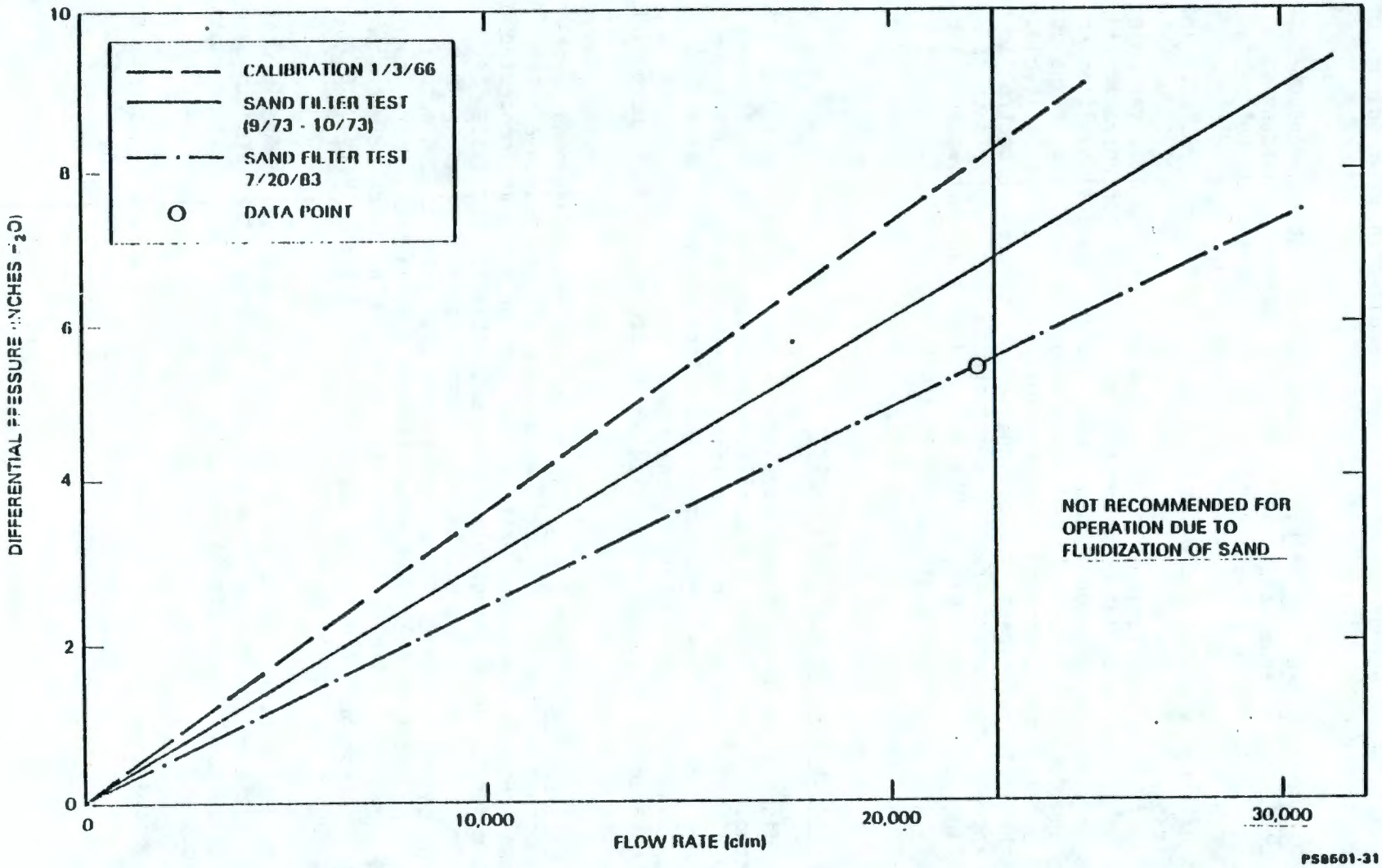


FIGURE 5-29. Operating Characteristics of the Sand Filter.

The overall DOP Test of the HEPA filters resulted in an efficiency of 99.958% and is indicated as a single point.

5.6.1.2 Radionuclide Release Rate. The sand filter test was conducted during a period of extended shutdown to simulate emergency shutdown conditions. Based on the release rates experienced during several tests lasting 4-8 h the projected total activity released for the sand filter during an extended shutdown was determined to be about $1 \times 10^{-3}$ Ci/d. This is significantly below the plant daily discharge limits of 0.01 Ci of $^{90}Sr$ and 0.2 Ci of all other fission products. The release rate is a variable dependent on the activity going to the sand media. This concentration is dependent on time, but the conditions present during the test typifies an emergency shutdown condition. An emergency situation resulting in the use of the sand filter may temporarily increase overall contamination levels. However, the activity released through the sand filter can be controlled by flushing appropriate process areas, sealing off the air supply (such as covering fan openings and taping cracks around doors) so that reduced flow is required and if necessary, isolation of areas responsible for excessive activity.

5.6.2 Emergency Operation of Sand Filter

Upon disruption of the operating filters, the standby sand filter can be activated. The original B Plant filter has a low filtration efficiency, around 99%. All processing in the building is shut down while using the sand filter. The air flow through the sand filter should be limited to 26,000 $ft^3$/min to prevent fluidizing the filter bed. The sand filter is either activated or taken out of service by the use of an inlet and outlet water seal.

5.6.2.1 Filling Sand Filter Seals. Water is supplied underground to the southwest corner of the sand filter. Water is also supplied to a riser above grade, through a stop and waste valve. Rubber hoses are connected from this riser to the filling inlets. An automatic filling system is provided for each seal. The floats are adjusted to keep the water level about 2 in. below the overfill drain on each seal. Water to the automatic valves is supplied from the above riser through a permanently installed, insulated line, containing ball-type block valves. The block valves are kept open to keep the seals filled automatically. Alternatively, the seal levels can be monitored and/or adjusted manually.

The inlet and outlet seals are tied together via an 18 in. drain that takes off at the bottom of each compartment. Therefore, the water in both seals equalize to a common liquid level, and both seals will fill or empty simultaneously.

The HEPA filter seals jet to Tank TK-10-1 and it should be ascertained that 10-1 can hold the water before emptying the seal. Emptying the seals will result in 4,500 gal increase of the 10-1 contents.

To jet a seal, the main 225 psi steam supply to the manifold on the east side of 291-B Fan House and the suction valve to the jet are opened to supply steam to the jet. When the jets are not in service, all the valves are closed.

While jetting any seal at 291-B the other water seal and sump magnehelic gauges are observed for change in level as it is possible to jet water into the seals because all 291-B jets have a common discharge header. However, if the sand filter seals are emptied, it will be necessary to closely monitor a small water seal that was installed in the underground, common 18-in. drain from the sand filter seals to the 8-ft-dia. valve pit. This small water seal in the 18-in. drain prevents a flow of unfiltered air directly from the sand filter inlet air duct to the outlet duct, discharging to the stack without filtration.

The sealing chamber is made of 19 1/4-in.-OD pipe and has a hold-up of about 18 gal of water, at a height of 15 in. above the bottom of baffle. The water left in the seal is exposed to the airstream and will gradually evaporate. There is an instrument weight factor dip tube installed in the water seal 1 in. above the bottom of the baffle, which is monitored in 291-BD Instrument Building.

The liquid level of the water seal is monitored each shift. When the liquid level recedes to an elevation 2 in. above the bottom of the baffle, supervision is notified. Plans are then made for refilling the water seal.

The instrument group is notified and the differential pressure measuring devices for the sand filter, located in 291-B Fan House, are placed in service. Differential pressure measurements of the sand filter should be monitored shift-wise.

Emptying the sand filter seals will place the sand filter in parallel operation with the operating filter systems. This is done by jetting water in the outlet seals.

The sampling and detection instrumentation for the 291-B stack monitoring equipment is given close attention by constant monitoring of the equipment in 292-B Building during the initial and early stages of the sand filter operation.

The capability for rapid diversion of the canyon exhaust air to the standby sand filter (about 5 or 10 min) can be done by draining the sand filter seal water to the outlet seals.

5.6.2.4 Water Supply To Filter Outlet Seal and Spray Manifold. The 8-ft dia. valve pit south of 291-BD contains the valve manifold for supplying the sprays in 291-BD and for filling the Filter outlet seal. The valves in the pit are locked in a closed position until the Fire Protection System is activated.

### 5.6.3 Survivability of Sand Filter (Ref. 5-7)

It is concluded that the sand filter structure would probably fail to resist the HRHE or the SSE, because there is minimal lateral restraint on the precast concrete beams which support the roof cover slabs. These beams could be displaced laterally from their supporting columns on one end by earthquake motions.

The internal reinforced concrete columns, footings, and reinforcement details appear adequate to resist HRHE or SSE motions. However, the analyses indicate flexural failure in the cell wall due to dynamic soil pressure loads from the backfill.

The sand filter cell analyses showed that stresses nearly exceed code limits in the concrete roof slabs due to the specified 100 $lb/ft^2$ live load and the dead load. The slabs do not satisfy code minimum stiffness requirement. At 50 $lb/ft^2$ live load, cover slab and beam flexure stresses would be within code limits. However, the concrete beams that support the cover slabs do not have shear reinforcement and are nearly overstressed without any seismic event. Hence, the HRHE load would overstress the slabs and beams, causing the building to collapse.

## 5.7 291-B STACK AND 292-B STACK MONITORING BUILDING

The stack, located 214 ft south and 87 ft west from the east end of the canyon, provides the elevated release path for the dispersion of potentially contaminated canyon air. The 200 ft stack column, constructed of reinforced concrete and vertical steel reinforcements, is a circular tapering hollow shaft 13-ft 10-3/8 in. OD and 1 ft thick at the base and 7 ft 6 in. OD and 6 in. thick at the top. The top is covered with an alloy cap (Ref. 5-30).

Within the stack is an acid proof brick lining laid in acid proof mortar completely separated from the column by a free unobstructed annular space. The lining is self supporting, free standing structure of varying wall sections and thicknesses at various elevations, and tapers from a 7-ft ID to a 5-ft ID 6 in. above the top of the concrete column. The acid-proof-brick lining, reinforced with alloy metal bands, is provided with an alloy cap anchored to the bricks by means of bolts.

This system has a catch tank which receives condensate from the stack. The catch tank solution can be jet transferred to the air tunnel which drains to the 10-1 tank in 221-B.

### 5.7.1 292-B Stack Monitoring Building

The building is a sample house for the B Plant stack. The gaseous and particulate emissions are continuously sampled in the building. The building has one level on grade with a poured concrete floor covering an area of 336 $ft^2$. The exterior and the interior walls are concrete blocks with a concrete deck roof covered with tar and gravel. The building has a

construction classification of "fire resistive" and has an occupancy classification of "special purpose industrial" and is equipped with portable fire extinguishers.

The sampling system consists of the Rockwell generic stack sampling and monitoring open-rack assembly and instrumentation described below. Remote alarm annunciation is located in the 271-B Building dispatcher's office.

5.7.1.1 Sampling System. The flow monitoring and isokinetic sample extraction tubes are housed in the main stack, which is located south of the 221-B main processing building. The isokinetic extraction probe transport lines and air flow sensing lines between the main stack and the 292-B Instrument Building are heated and insulated to prevent moisture condensation from the sample air stream.

The 292-B Instrument Building west of the main B Plant stack houses the bulk of the flow monitoring and radiation analysis equipment. Instrument controls, alarms, and indicators are located within this structure except for the high airborne radiation beacon and system failure bell which are mounted on the exterior of the 292-B Building. Remote alarms and indicators are installed in the 271-B Building dispatcher's office.

5.7.1.2 Main Stack Flow Monitoring. A flowrate sensing element is installed in the main stack airstream to measure air flow. An electrical signal, proportional to the stack flow, is transmitted to the 271-B Building dispatcher's office. The flowrate and totalized flow are displayed in this office. The flow sensing elements and indicators are sized to handle the main stack flowrates, which range from 25,000 $ft^3$/min to 75,000 $ft^3$/min. The probes are mounted at 50 ft in elevation in the stack.

5.7.1.3 Isokinetic Sample Extraction Probes (Ref. 5-3, Fig. 5-30). Two separate isokinetic air extraction probes are installed to withdraw representative air samples from the main stack airstream. The record sampling system operates continuously if air is being exhausted from the stack. The continuous air monitoring (CAM) system operates continuously under all circumstances. The Rockwell generic system has a switched receptacle linked to the exhaust fan operation. A flow switch disrupts power to the receptacle when stack air flow stops and restores the power upon detection of the resumption of flow.

Sample probes are designed for isokinetic sample extraction based on the average stack velocity. The average value is determined from velocity profile measurements taken at or near the plane of sample extraction.

One probe is dedicated to extract an air sample that passes through a paper record filter at a minimum flow rate of 2.2 $ft^3$/min. A flowrate exceeding 4.0 $ft^3$/min will damage the record filter and, therefore, cannot be exceeded. Air flowrates through the record filter are sensed, regulated, indicated, and totalized in the 292-B Instrument Building. A low sample air flowrate activates an alarm switch that initiates local and remote alarm indicators. Remote alarms and indicators are located in the 271-B Building dispatcher's office.

THIS PAGE INTENTIONALLY
LEFT BLANK

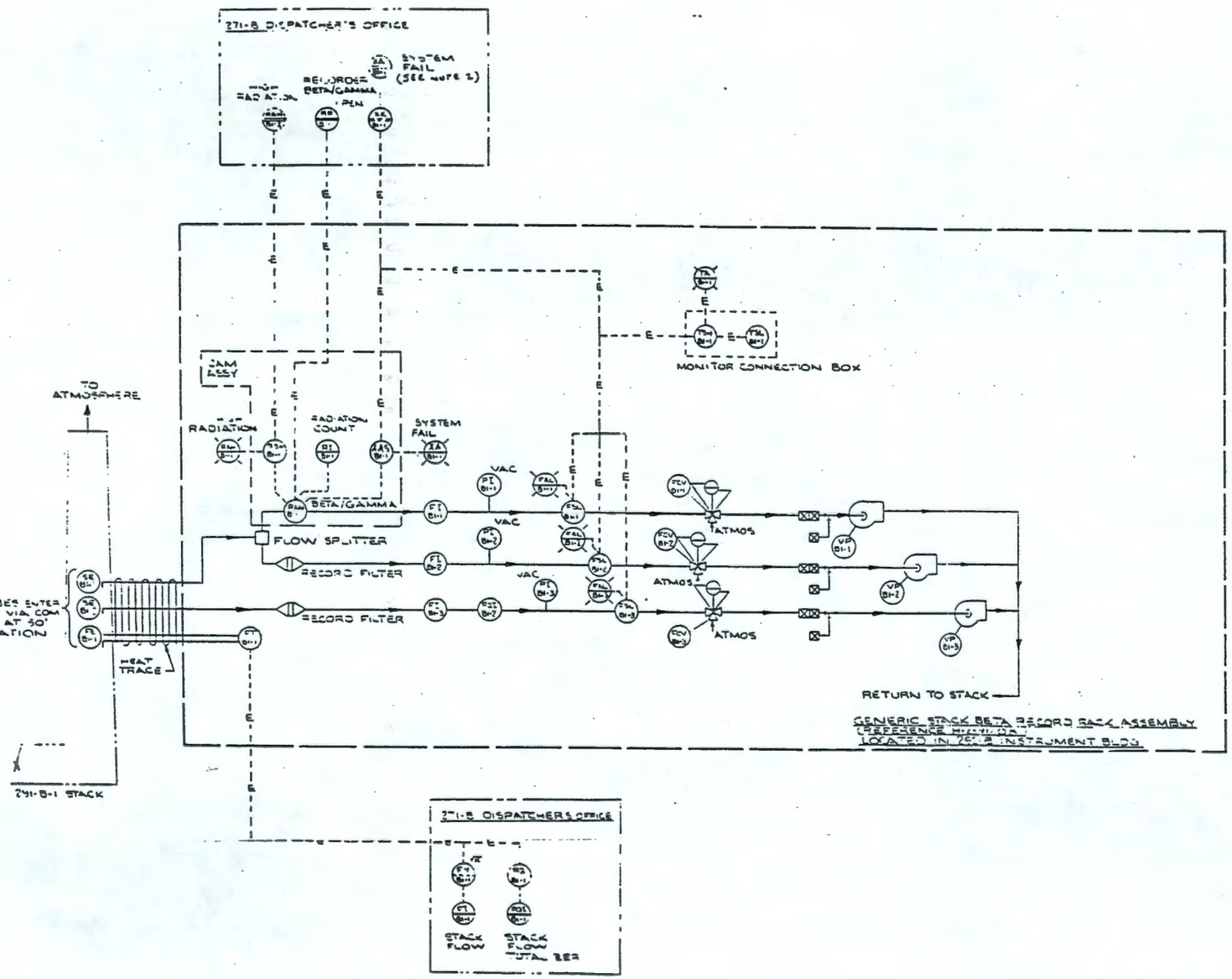


LEGEND:

- VACUUM PUMP
- QUICK DISCONNECT COUPLING
- BETA/GAMMA · CONTINUOUS AIR MONITORING UNIT, BETA GAMMA RADIATION DETECTOR
- PROCESS SAMPLING LINE
- ELECTRICAL LINE
- EXISTING BUILDING/STRUCTURE
- LOCAL MOUNTED INSTRUMENT/DEVICE
- LOCAL PANEL MOUNTED INSTRUMENT/DEVICE
- REMOTE PANEL MOUNTED INSTRUMENT/DEVICE
- REMOTE REAR PANEL MOUNTED INSTRUMENT/DEVICE
- EXISTING REMOTE PANEL MOUNTED INSTRUMENT/DEVICE
- LOCAL PANEL MOUNTED INDICATOR LIGHT
- FCV · FLOW CONTROL VALVE (INTERNALLY REGULATED)
- √X · SQUARE ROOT EXTRACTOR

NOTES:

1. UNLESS OTHERWISE NOTED, SYMBOLS AND LEGEND USED ON THIS DRAWING CONFORM TO SA STANDARD SS...
2. SYSTEM FAILURE ALARM AT 291-B DISPATCHER'S OFFICE IS COMBINATION OF CAM INSTRUMENT MALFUNCTION, TEMPERATURE & LOW FLOW INDICATION FROM 292-B.
3. ALL EQUIPMENT LOCATED INSIDE THE 291-B INSTRUMENT BUILDING SHALL BE FURNISHED BY THE GOVERNMENT.

INSTRUMENT IDENTIFICATION LIST:

FAL - FLOW ALARM LOW
FCV - FLOW CONTROL VALVE
FE - FLOW ELEMENT
FI - FLOW INDICATOR
FQ - FLOW INTEGRATOR
FQI - FLOW INTEGRATOR INDICATOR
FSL - FLOW SWITCH LOW
FT - FLOW TRANSMITTER
FY - FLOW COMPUTER

PI - PRESSURE INDICATOR
RAH - RADIATION ALARM HIGH
RAN - RADIATION ANALYZER
RI - RADIATION INDICATOR
RR - RADIATION RECORDER
RSH - RADIATION SWITCH HIGH
XAS - FAILURE ALARM SWITCH
SE - SAMPLE ELEMENT
TA - TEMPERATURE ALARM
TSH - TEMPERATURE SWITCH HIGH
TSL - TEMPERATURE SWITCH LOW
XA - FAILURE ALARM
XK - FAILURE RELAY
CAM - CONTINUOUS AIR MONITOR

FIGURE 5-30. The 291-B Generic Stack Record Rack Assembly.

THIS PAGE INTENTIONALLY
LEFT BLANK

THIS PAGE LEFT BLANK INTENTIONALLY.

The other probe draws a sample through a flow splitter. One side of the flow splitter is ported to a backup record filter. The other side of the flow splitter is ported to a continuous beta/gamma radiation monitor. The air flow through the backup record filter is regulated and equipped with a local flowrate indicator. The radiation monitor has a similar regulating and indicating device.

Local, low-sample flowrate alarms are provided by the Rockwell generic sample system. Alarms resulting from a radiation analyzer malfunction or a low sample flowrate annunciate separately at a local level; but these alarms are combined into one general alarm at the remote alarm panel. The Rockwell generic sample system has local alarms for high airborne radiation and system failure and a high temperature alarm for CAM circuit protection.

### 5.7.2 Survivability of Exhaust Ventilation Stack 291-B (Ref. 5-7)

Analyses conducted to determine the resistance of the 291-B exhaust ventilation stack to seismic motions, tornado wind, and missiles concludes that, under the HRHE, the stresses in the concrete are within allowable limits, but the stress in the vertical steel reinforcement will exceed the yield. Overturning moment calculations for the stack using HRHE motion indicates stack foundation instability. Furthermore, the stack concrete and vertical reinforcement will be overstressed by SSE motions. The unreinforced masonry lining in the concrete stack is brittle and offers no shear and bending resistance. It will be incapable of resisting lateral HRHE and SSE seismic motions. The failure of the masonry lining will plug the stack.

The 175 mph tornado wind will cause about 79 $lbs/ft^2$ pressure on the projected area of the stack and this pressure combined with the dead load will overstress the concrete causing the vertical reinforcement to yield. The overturning moment applied by 175 mph tornado on the stack equals the foundation's capacity to resist overturning. Based upon the analysis it is not likely that the stack will be functional after a design basis tornado. The 26 in. x 20 ft of 20-gauge (mean thickness of .0396 in.) corrugated steel siding impacting the stack at 150 mph will not penetrate but only result in spalling of the concrete.

### 5.7.3 Survivability of 292-B Building (Ref. 5-7)

Based on an extensive history of unreinforced unit masonry structure collapse due to earthquake motions, the 292-B Building cannot withstand the HRHE or SSE ground motions. The building will not survive the 175 mph tornado wind and tornado-generated missile loads. It is concluded that probability of surviving HRHE and SSE loads, missile loads, and tornado wind loads is low.

## 5.8 PRIMARY CONTAINMENT

The waste fractionization building is a radiochemical processing plant with all the process materials contained within tanks, process equipment (ion exchangers, solvent extraction columns, pumps, concentrators) and piping connecting the vessels and the equipment. The tanks and equipment are located in a single array of cells (Fig. 5-31) which are sunk below deck level, and with each cell covered by four 6-ft thick concrete blocks. Radioactive solutions during intersectional transport are transferred by way of the pipe trench running the length of the canyon to the boundary of Cell 4. The pipe trench is covered by stepped 4.5-ft-thick concrete covers similar to those used for the process cells.

The process equipment, tanks, and piping provide physical barriers and their associated vessel vent systems form the primary confinement of the radio-chemical solutions in the process. The vessels and equipment are compartmentalized within the cells, and the intersectional piping for transport of radiochemical solutions are located within the hot pipe trench area to isolate high risk zones and minimize the potential hazardous effects of design basis accidents.

The piping from the galleries and the AMU area is used for non-radioactive chemical transfer through seal pots to the equipment and the tanks. All chemical additions to wall nozzles go through seal pots except at nozzles 2 and 41 for Cell 21 and nozzle 71 for Cell 18. Nozzles 2 and 41 are for anhydrous ammonia and carbon dioxide addition to Tank 21-1. Nozzle 71 is for resin addition to the ion-exchange column, T-18-2. The valves at the wall serve as an isolation device. The anhydrous ammonia pipe in the 221-B pipe gallery is enclosed in a ventilation duct. The duct exhaust is discharged 5 ft above the 221-B Building by a 200 $ft^3$/min blower. The cold-chemical and the utility pipes are curved where they pass through shielding walls to minimize radiation leakage. Seal pots and valves are located near the north wall piping penetration, to provide the demarcation boundary for contamination control between the accessible "cold-chemical", the isolated radioactive areas, and designed to minimize transport of radioactive materials into operating areas.

### 5.8.1 Waste Processing Plant Equipment in Canyon Cells (Ref. 5-35)

This section covers the major equipment used in the diversified process at B Plant. Details are available in B Plant Equipment and Facilities information manual (Ref. 5-36). Table 5-11 identifies the design and operating parameter of the equipment used in B Plant Cell.

5.8.1.1 Canyon Tanks (Fig. 5-32 and 5-33). The tanks in the canyon are cylindrical or oval enclosed cross section tanks except for the open topped 10,000-gal waste collection tank in Cell 10. Table 5-12 provides pertinent data and information applicable to the canyon tanks and Figure 5-31 indicates the cell allocation to these tanks. All tanks are equipped with cooling coils except for pump tank TK-29-4 which is located within make-up tank (TK-29-2).

THIS PAGE INTENTIONALLY
LEFT BLANK

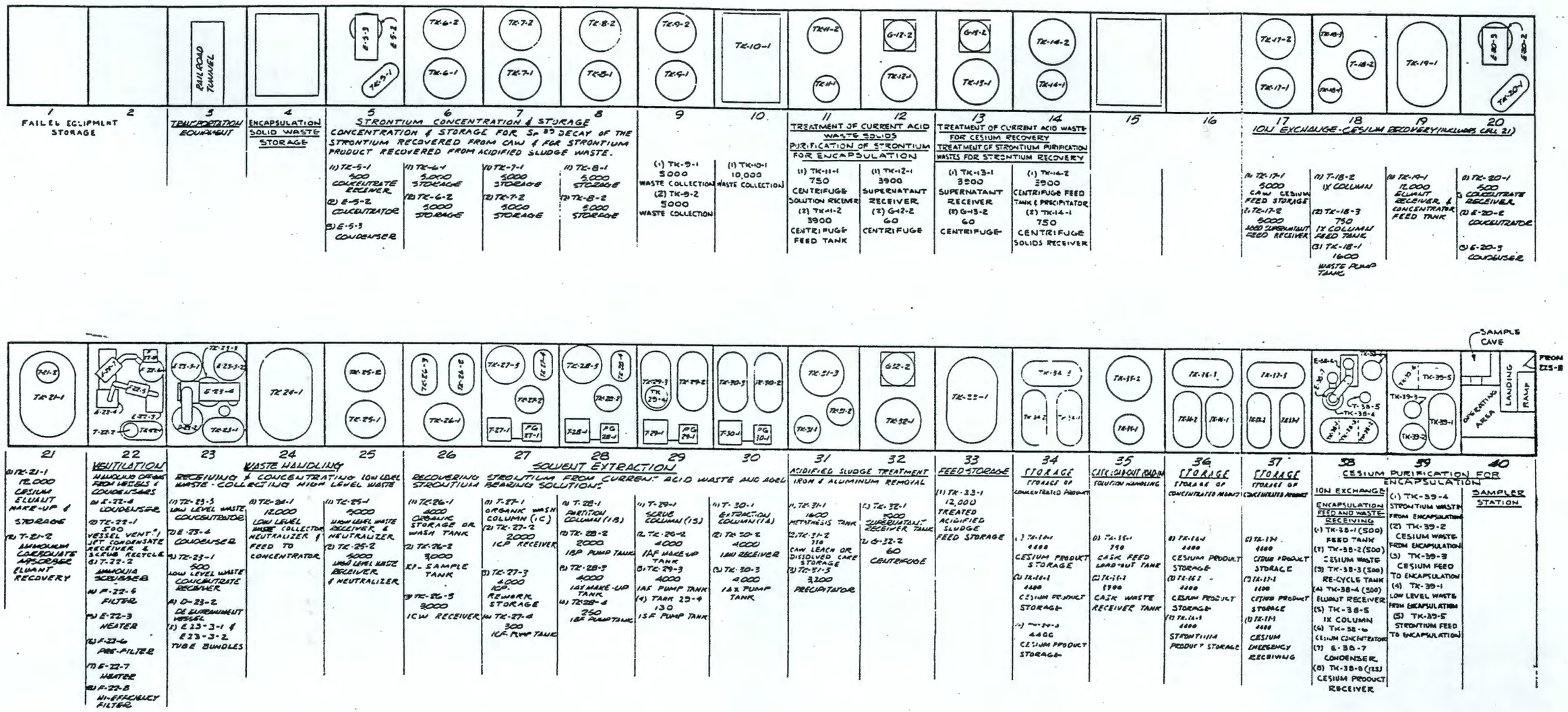


FIGURE 5-31. B Plant Cell Allocation.

THIS PAGE INTENTIONALLY
LEFT BLANK

THIS PAGE LEFT BLANK INTENTIONALLY.

9312899101

TABLE 5-11. Design and Operating Condition of Equipment.

| Equipment | Design conditions | | | | Operating conditions | | | | Reference |
|---|---|---|---|---|---|---|---|---|---|
| | Pressure (psig) | | Temperature(°F) | | Pressure (psig) | | Temperature(°F) | | |
| | Shell | Tube | Shell | Tube | Shell | Tube | Shell | Tube | |
| Tanks | 60(1) | 150* | 250 | 250 | 10(1) | 100* | 125 | 85 | H-2-66357<br>H-2-66355 |
| T-22-2 Tower | -2.2 | | 250 | | -0.4 | | 130 | | H-2-60842 |
| E-22-3 Heater | 10/5 | 100 | 350 | 350 | 50(1) | 95 | 75(in.)/225 (BOT) | 335 | H-2-60843 |
| E-22-7 Heater | 5 | 135 | 350 | 350 | 60(1) | 100 | 75(in.)/225(BOT) | 328 | H-2-60845 |
| F-22-8 (1 & 2) Filter | 5 | | 350 | | 60(1) | | 225 | | H-2-60846 |
| E-23-3 Concentrator Boiler | ±5 | | 300 | | 50(1) | | 220 | | H-2-60851 |
| E-23-4 Condenser | 10 | 150 | 300 | 300 | 50(1) | 95 | 220 | 220 | H-2-60854 |
| T-27-1, T-28-1<br>T-29-1, T-30-1 | 20(1)T/10B | | 250 | | 10(2)T/6B | | 90 | | H-2-60865<br>H-2-60998 |
| T-18-5 | 70 | | 250 | | 30 | | | | H-2-36584 |
| T-38-5 | 100 | 50+ | 200 | 200+ | 90 | 30 | 90 | 100 | H-2-66200 |
| E-88-6 | | | | | | | | | |
| a. Vessel | 30/60(1) | | 200 | | 20(1) | | 200 | | H-2-66261 |
| b. Tube bundle (heating) | 100 | | 340 | | 20(1) | | 200 | | |
| c. Jacket | 100 | | 225 | | | | | | |
| E-38-7 | 150 | 60(1) | 250 | 250 | 100 | 60(1) | 185 | 185 | H-2-66264 |

1. in. $H_2O$ Vacuum
T - Top
B - Bottom
*Pipe Coil

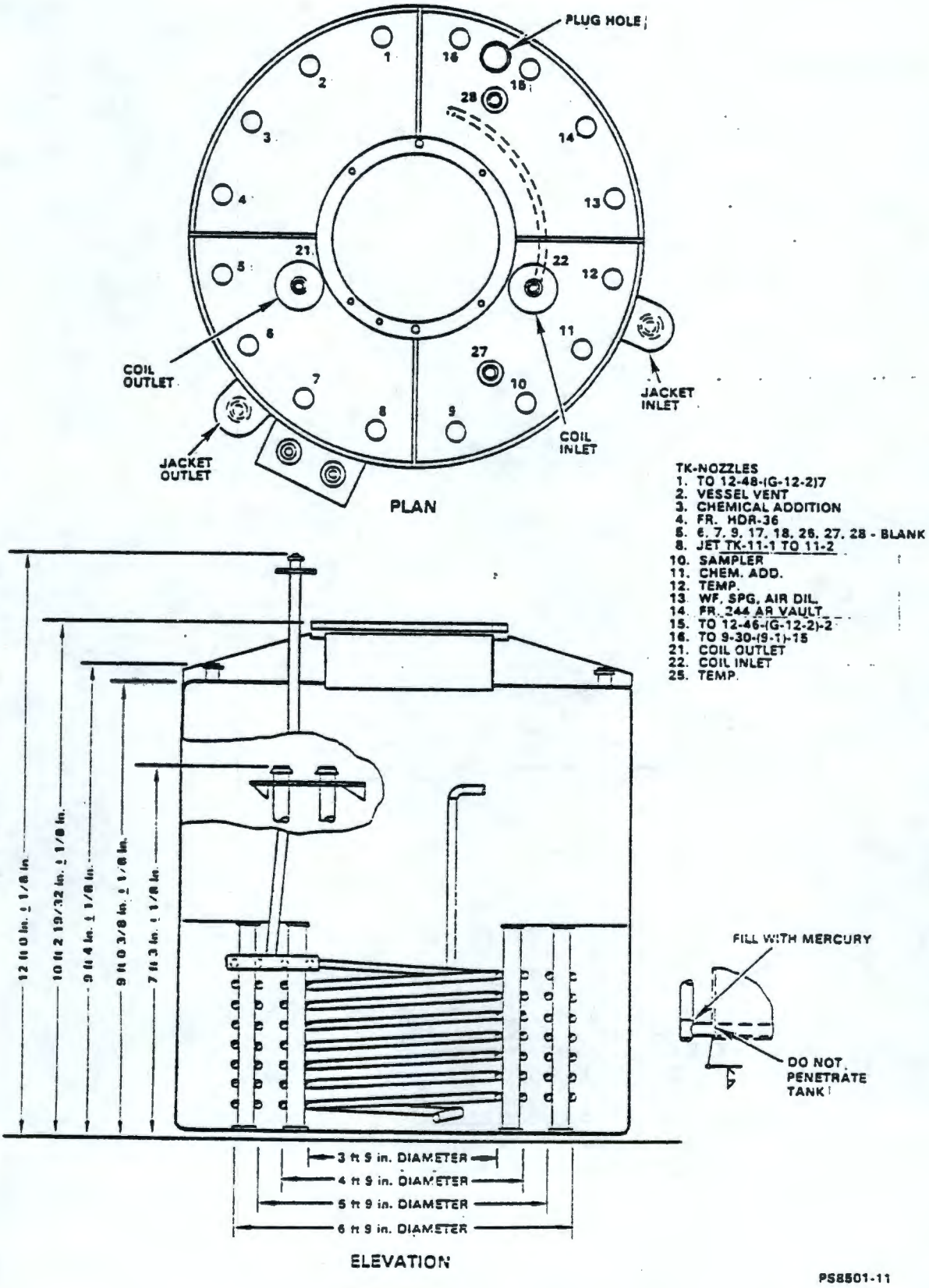


FIGURE 5-32. Canyon Tank 1.

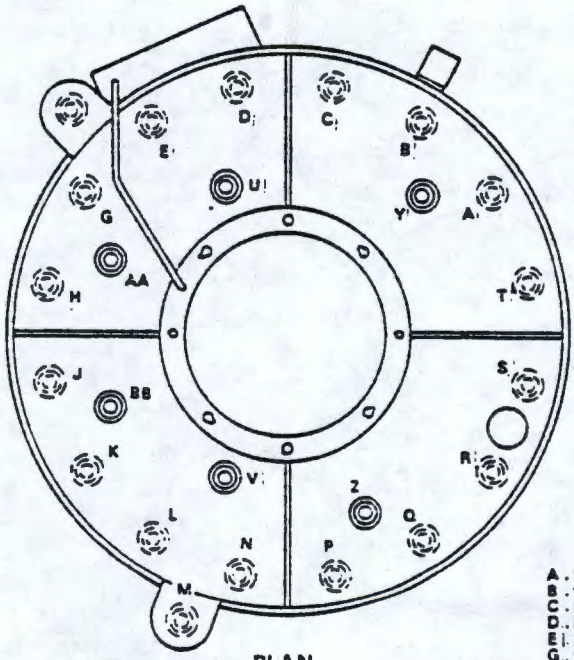


PLAN

A - VESSEL VENT
B - TO 17-42-(17-2)-R
C - FROM 16-207
D - FROM 13-37/34-(13-1)-Q
E - AIR DILUTION
G - TO 13-207-(13-1)-P
H - FROM 14-73-(14-1)-Q
J - FROM 17-4-3-(17-1)-T
K - SAMPLER
L - CHEM. ADD.
N - TEMP. AND SPKR.
P - WF AND SPG.
Q - TO 35-30-(35-1)-P HDR 69
S - FROM 11-30/29-(11-1)-13
T - TO 13-39-(G-13-2)-H
U - COIL OUTLET
V - COIL INLET
W - LUBE TO AGIT.
X - ELECT. TO AGIT. AND HEAD DETECTOR
F, M, R, Y, Z, AA AND BB ARE BLANK

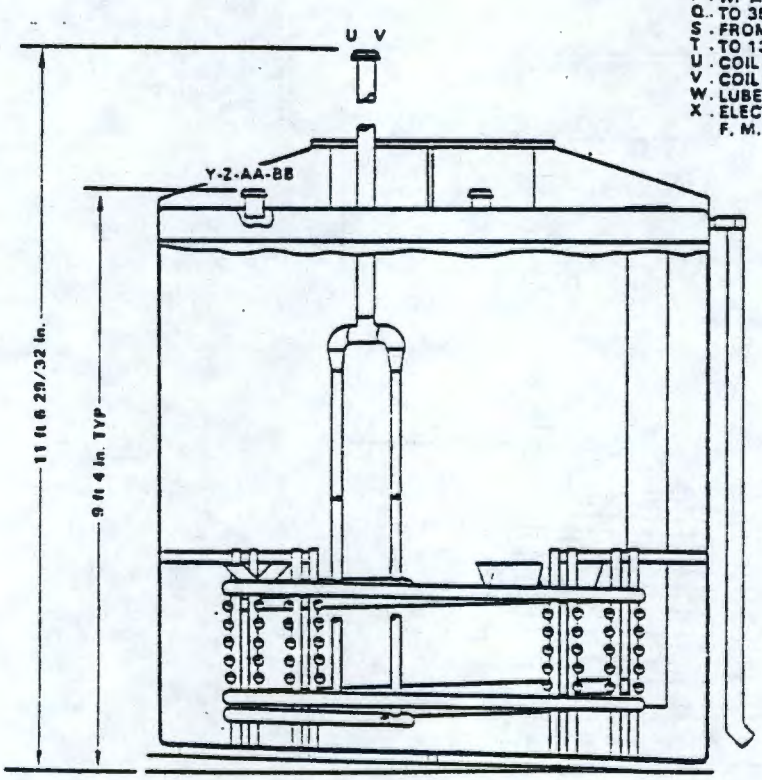


ELEVATION

PS8501-26

FIGURE 5-33. Canyon Tank 2.

TABLE 5-12. Canyon Tanks Information. (Sheet 1 of 5)

| Tank no. | Function | Dimension (ft/dia.) | Capacity (gal) | Cooling coils | | Coil range (gal) | | Maximum concentration | | | Agitator or pump |
|---|---|---|---|---|---|---|---|---|---|---|---|
| | | | | Surface ($ft^2$) | Duty Btu/h | From | To | Sr(HCl) | Cs(HCl) | Pu(kg/l) | |
| 5-1 | Strontium concentrate receiver | 3.25 x 7 x 4 | 500 | 240 | $4.8 \times 10^5$ | 65 | 416 | 3.2** | 5.62** | 1.5 | A-5-1 |
| 6-1 | Strontium storage | 8 x 14 | 5,200 | 420 | $8.4 \times 10^5$ | 227* | 1,649 | 15.1 | 21.9 | 2.5 | A-6-1 |
| 6-2 | Strontium storage | 8 x 14 | 5,200 | 420 | $8.4 \times 10^5$ | 238* | 1,698 | 15.1 | 21.9 | 2.5 | A-6-2 |
| 7-1 | Strontium storage | 8 x 14 | 5,200 | 157 | $3.14 \times 10^5$ | 494* | 4,051 | 10.8 | 15.3 | 2.5 | A-7-1 |
| 7-2 | Strontium storage | 8 x 14 | 5,200 | 157 | $3.14 \times 10^5$ | 500* | 4,000 | 15.1 | 21.9 | 2.5 | A-7-2 |
| 8-1 | Strontium storage | 8 x 14 | 5,200 | 157 | $3.14 \times 10^5$ | 499* | 4,022 | 10.8 | 15.3 | 2.5 | A-8-1 |
| 8-2 | Strontium storage | 8 x 14 | 5,200 | 157 | $3.14 \times 10^5$ | 416 | 4,022 | 10.8 | 15.3 | 2.5 | A-8-1 |
| 9-1 | Waste receiver | 8 x 14 | 5,200 | 157 | $3.14 \times 10^5$ | 432 | 4,035 | 15.1 | 21.9 | 2.5 | A-9-1 |
| 9-2 | Supernatant storage | 8 x 14 | 5,200 | 157 | $3.14 \times 10^5$ | 505 | 4,065 | 12.6 | 18.2 | 2.5 | Air Lift Circulator |
| 10-1 | Waste collection | 18 x 11 x 7 | 10,000 | 908 | $18.16 \times 10^5$ | 700 | 7,500 | 34.5 | 48.8 | 4.0 | None |
| 11-1 | Slurry tank | 4.5 x 7 | 800 | 78 | $1.56 \times 10^5$ | 122 | 662 | 2.52 | 3.64 | 13.1 | A-11-1 |
| 11-2 | Decant and metathesis | 9 x 9 | 3,913 | 300 | $6.0 \times 10^5$ | 100 | 1,500 | 15.1 | 21.9 | 2.5 | A-11-2 |
| 12-1 | Supernatant receiver | 9 x 9 | 4,200 | 118 | $2.36 \times 10^5$ | 551 | 2,964 | 15.1 | 21.9 | 2.5 | A-12-1 |
| 13-1 | Centrifuge supernatant receiver | 9 x 9 | 3,972 | 30 | $0.6 \times 10^5$ | 318 | 3,532 | 10.3 | 14.6 | 2.5 | A-13-1 |
| 14-1 | CAW cesium product receiver | 4.5 x 7 | 656.7 | 78 | $1.56 \times 10^5$ | 98 | 687 | 4.21 | 7.37 | 1.3 | A-14-1 |

TABLE 5-12. Canyon Tanks Information. (Sheet 2 of 5)

| Tank no. | Function | Dimension (ft/dia.) | Capacity (gal) | Cooling coils | | Coil range (gal) | | Maximum concentration | | | Agitator or pump |
|---|---|---|---|---|---|---|---|---|---|---|---|
| | | | | Surface ($ft^2$) | Duty Btu/h | From | To | Sr(HCl) | Cs(HCl) | Pu(kg/l) | |
| 14-2 | Cesium storage | 9 x 9 | 3,899 | 118 | $2.36 \times 10^5$ | 491 | 2,939 | 12.6 | 18.2 | 2.5 | A-14-2 |
| 17-1 | Cesium storage | 8 x 14 | 4,940.3 | 228 | $4.56 \times 10^5$ | 173 | 1,476 | 15.1 | 21.9 | 2.5 | A-17-1 |
| 17-2 | Cesium supernatant receiver | 8 x 14 | 4,995.3 | 100 | $1.97 \times 10^5$ | 110 | 950 | 2.52 | 3.64 | 2.5 | A-17-2 |
| 18-1 | IXW receiver | 9.5 x 12 | 1,848.3 | 52 | $1.04 \times 10^5$ | 100 | 507 | 0.52 | 0.731 | 1.5 | A-18-1 |
| 18-3 | IXF pump tank | 4.5 x 7 | 737.6 | 40 | $0.80 \times 10^5$ | 25 | 324 | 2.52 | 3.64 | 1.3 | A-18-3 |
| 19-1 | IXP receiver tank | 10 x 16 x 14 | 11,260 | 160 | $3.2 \times 10^5$ | 600 | 2,670 | 0.52 | 0.731 | 3.0 | A-19-1-1<br>A-19-1-2<br>PA-19-1 |
| 20-1 | IXP concentrate receiver | 3.25 x 7 x 4 | 492.1 | 240 | $4.8 \times 10^5$ | 62 | 412 | 2.52 | 3.64 | 1.5 | A-20-1 |
| 21-1 | Cesium eluent storage | 10 x 16 x 14 | 12,500 | 160 | $3.2 \times 10^5$ | 500 | 2,520 | 7.55 | 10.9 | 3.0 | A-21-1-1<br>A-21-1-2<br>P-21-1-1<br>P-21-2-1 |
| 22-1 | Condensate receiver | 3.25 x 7 x 4 | 460.9 | 240 | *$21.6 \times 10^5$<br>$4.8 \times 10^5$ | 68 | 417 | 3.0 | 4.88 | 1.5 | PA-22-1 |
| 23-1 | Nonboiling waste concentrate | 3.25 x 7 x 4 | 792.2 | 128 | $2.56 \times 10^5$ | 53 | 502 | 2.52 | 3.64 | 1.5 | PA-23-1 |
| 24-1 | Low level waste receiver | 10 x 16 x 14 | 11,090 | 290 | $5.8 \times 10^5$ | 500 | 7,092 | 2.52 | 3.64 | 3.0 | A-24-1-1<br>A-24-1-2 |
| 25-1 | Cesium waste receiver | 8 x 14 | 4,873.9 | 435 | $8.7 \times 10^5$ | 150 | 2,045 | 2.52 | 3.64 | 2.5 | P-25-1<br>A-25-1 |
| 25-2 | High level waste receiver | 8 x 14 | 4,862 | 435 | $8.7 \times 10^5$ | 150 | 2,096 | 2.52 | 3.64 | 2.5 | A-25-2<br>P-25-2 |

TABLE 5-12. Canyon Tanks Information. (Sheet 3 of 5)

| Tank no. | Function | Dimension (ft/dia.) | Capacity (gal) | Cooling coils | | Coil range (gal) | | Maximum concentration | | | Agitator or pump |
|---|---|---|---|---|---|---|---|---|---|---|---|
| | | | | Surface ($ft^2$) | Duty Btu/h | From | To | Sr(HCl) | Cs(HCl) | Pu(kg/l) | |
| 26-1 | Organic contractor | 9 x 9 | 3,932.1 | 68 | $1.36 \times 10^5$ | 302 | 3,358 | 2.52 | 3.64 | 2.5 | A-26-1<br>P-26-1 |
| 26-2 | ICF contractor | 5 x 7 x 12.5 | 2,636.3 | 48 | $0.96 \times 10^5$ | 150 | 610 | 2.52 | 3.64 | 1.5 | A-26-2 |
| 26-3 | ICP receiver | 5 x 7 x 12.5 | 2,621.3 | 48 | $0.96 \times 10^5$ | 125 | 569 | 3.45 | 4.88 | 1.5 | P-26-3 |
| 27-2 | ICP receiver | 5.5 x 12 | 2,002.4 | 52 | $1.04 \times 10^5$ | 60 | 460 | 2.52 | 3.64 | 1.5 | A-27-2 |
| 27-3 | ICW contractor | 7 x 14 | 3,790 | 200 | $4.0 \times 10^5$ | 200 | 2,074 | 2.52 | 3.64 | 2.0 | P-27-3<br>A-27-3 |
| 27-4 | ICF pump tank | 2.75 x 5 x 3.5 | 280.3 | 55 | $1.1 \times 10^5$ | 30 | 205 | 1.79 | 3.14 | 1.0 | PA-27-4 |
| 28-2 | IBP receiver | 5.5 x 12 | 1,980 | 52 | $1.04 \times 10^5$ | 64 | 561 | 2.52 | 3.64 | 2.0 | P-28-2<br>A-28-2 |
| 28-3 | IAX makeup | 7 x 14 | 3,757.4 | 200 | $4.0 \times 10^5$ | 189 | 1,934 | 2.52 | 3.64 | 2.0 | P-28-3<br>A-28-3 |
| 28-4 | IBF pump tank | 2.75 x 5 x 14 | 284.9 | 55 | *$4.95 \times 10^5$<br>$1.1 \times 10^5$ | 30 | 202 | 3.45 | 4.88 | 1.0 | PA-28-4 |
| 29-2 | IAF makeup | 9.5 x 5 x 14 | 3,982.7 | 200 | $4.0 \times 10^5$ | 237 | 1,636 | 2.52 | 3.64 | 2.0 | A-29-2 |
| 29-3 | IAF pump tank | 9.5 x 5 x 14 | 4,149.3 | 200 | $4.0 \times 10^5$ | 240 | 1,651 | 2.52 | 3.64 | 0.5 | A-29-3<br>P-29-3 |
| 29-4 | ISF pump tank | 1.66 x 8.66 | 140 | | | | | 0.745 | 1.31 | 0.5 | P-29-4 |
| 30-2 | IAW receiver | 9.5 x 5 x 14 | 4,128.9 | 200 | $4.0 \times 10^5$ | 140 | 1,500 | 2.52 | 3.64 | 2.0 | A-30-2 |
| 30-3 | IAX pump tank | 9.5 x 5 x 14 | 4,135.5 | 200 | $18 \times 10^5$ | 209 | 1,634 | 2.52 | 3.64 | 2.0 | A-30-3<br>A-30-3 |
| 31-1 | PAS metathesis tank | 5.5 x 9 | 1,533 | 52 | $4.68 \times 10^5$<br>$1.04 \times 10^5$ | 61 | 533 | 4.31 | 6.10 | 1.5 | A-31-1 |
| 31-2 | Dissolved cake storage | 4.5 x 7 | 715 | 40 | $0.80 \times 10^5$ | 111 | 405 | 4.58 | 8.24 | 1.3 | A-31-2 |

TABLE 5-12. Canyon Tanks Information. (Sheet 4 of 5)

| Tank no. | Function | Dimension (ft/dia.) | Capacity (gal) | Cooling coils | | Coil range (gal) | | Maximum concentration | | | Agitator or pump |
|---|---|---|---|---|---|---|---|---|---|---|---|
| | | | | Surface ($ft^2$) | Duty Btu/h | From | To | Sr(HCl) | Cs(HCl) | Pu(kg/l) | |
| 32-1 | Waste receiver tank | 9.5 x 9 | 3,969.1 | 115 | $2.30 \times 10^5$ | 852 | 3,011 | 5.04 | 7.28 | 2.5 | A-32-1 |
| 33-1 | Treated acidified sludge storage | 10 x 16 x 14 | 14,056.9 | 160 | $3.20 \times 10^5$ | 562 | 2,55 | 1.72 | 2.44 | 3.0 | A-33-1-1<br>A-33-1-2 |
| 34-1 | Cesium product storage | 5.5 x 9 x 14 | 4,139.3 | 382 | $8.0 \times 10^5$ | 240 | 1,634 | 7.57 | 10.9 | 2.0 | A-34-1 |
| 34-2 | Cesium product storage | 5.5 x 9 x 14 | 4,100 | 382 | $8.0 \times 10^5$ | 160 | 1,660 | 21.4 | 30.9 | 2.0 | A-34-2 |
| 34-3 | Cesium product storage | 5.5 x 9 x 14 | 4,100 | 382 | $8.0 \times 10^5$ | 180 | 1,640 | 21.4 | 30.9 | 20.0 | A-34-3 |
| 35-1 | Cask feed loadout tank | 4.5 x 7 | 750 | 95 | $2.0 \times 10^5$ | 50 | 320 | 4.68 | 8.41 | 0.5 | A-35-1 |
| 35-2 | Cask waste receiver tank | 9 x 9.83 | 3,963 | 30 | $4.26 \times 10^5$ | 303 | 1,454 | 25.2 | 45.4 | 2.5 | A-35-2 |
| 36-1 | Strontium product storage | 5.5 x 9 x 14 | 4,400 | 385 | $8.0 \times 10^5$ | 192.8 | 1,683.8 | 15.1 | 21.9 | 2.0 | A-36-1 |
| 36-2 | Strontium product storage | 5.5 x 9 x 14 | 4,400 | 385 | $8.0 \times 10^5$ | 187.1 | 1,684.9 | 15.1 | 21.9 | 2.0 | A-36-2 |
| 36-3 | Strontium product storage | 5.5 x 9 x 14 | 4,400 | 385 | $8.0 \times 10^5$ | 245.9 | 1,666.8 | 15.1 | 21.9 | 2.0 | A-36-3 |
| 37-1 | Cesium product storage | 5.5 x 9 x 14 | 4,400 | 382 | $8.0 \times 10^5$ | 225 | 1,700 | 15.1 | 21.9 | 2.0 | A-37-1 |
| 37-2 | Cesium product storage | 5.5 x 9 x 14 | 4,400 | 382 | $8.0 \times 10^5$ | 214 | 1,651 | 15.1 | 21.9 | 2.0 | A-37-2 |
| 37-3 | Cesium emergency receiver | 5.5 x 9 x 14 | 4,400 | 382 | $8.0 \times 10^5$ | --- | 1,848 | 15.1 | 21.9 | 2.0 | |
| 38-1 | Feed tank | 3 x 4 x 7 | 500 | 26 | $0.32 \times 10^5$<br>$0.33 \times 10^5$ | 39.3 | 263 | 1.14 | 1.61 | 0.5 | P-38-1 |

TABLE 5-12. Canyon Tanks Information. (Sheet 5 of 5)

| Tank no. | Function | Dimension (ft/dia.) | Capacity (gal) | Cooling coils | | Coil range (gal) | | Maximum concentration | | | Agitator or pump |
|---|---|---|---|---|---|---|---|---|---|---|---|
| | | | | Surface ($ft^2$) | Duty Btu/h | From | To | Sr(HCl) | Cs(HCl) | Pu(kg/l) | |
| 38-2 | Cask feed loadout | 4.5 x 7 | 500 | 15 | $0.08 \times 10^5$ | 41.9 | 388.6 | 1.14 | 1.61 | 0.5 | Air Sparge |
| 38-3 | Recycle tank | 2.66 x 4 x 7 | 500 | 26 | $0.33 \times 10^5$ | 39.8 | 305.9 | 0.276 | 0.390 | 0.5 | Air Sparge |
| 38-4 | Eluent receiver | 4.5 x 5.5 | 500 | | $0.25 \times 10^5$ | 46.2 | 262.8 | 0.793 | 1.12 | 0.5 | Air Sparge P-38-4 |
| 38-8 | Cesium product receiver | 2.33 x 2 | 125 | 20 | $0.33 \times 10^5$ | 4.3 | 24.07 | 0.196 | 1.61 | 0.5 | Air Spare |
| 39-1 | Low level waste from WESF | 9.5 x 5 x 12 | 3,700 | 200 | 375 | 63.4 | 2,659.9 | 0.0130 | 0.018 | 0.5 | A-39-1 |
| 39-2 | Cesium waste to WESF | 4.75 x 5 x 12.66 | 1,850 | 90 | $3.0 \times 10^5$ | 46.8 | 749.7 | 10.3 | 14.6 | 0.5 | A-39-2 |
| 39-3 | Cesium feed to WESF | 3.0 x 9.0 | 325 | 115 | $2.6 \times 10^5$ | | | 0.74 | 1.05 | 0.5 | Air Sparge |
| 39-4 | Strontium waste from WESF | 4 x 5 x 12 | 1,500 | 26 | $2.25 \times 10^5$ | 36.7 | 938.3 | 7.76 | 11.0 | 0.5 | A-39-4 |
| 39-5 | Strontium feed to to WESF | 5.5 x 5 x 12 | 2,200 | 100 | $4.20 \times 10^5$ | 53.0 | 1,618.5 | 7.55 | 10.9 | 0.5 | A-39-5 |

Some tanks have integral water jackets but they are not currently used. The coils are hydrostatically tested at 150 psig and the tanks are tested by filling with water to ensure the integrity of the tank and coils during operational transients. These tank volumes are determined as a function of liquid level; the information is found in the Tank Calibration Manual (Ref. 5-37).

5.8.1.2 Concentrators and Condensers (Table 5-13). The four concentrators in B Plant are designated as:

- E-5-2 Strontium Product Concentrator
- E-20-2 Cesium Product Concentrator
- E-23-3 Low Level Waste Concentrator
- E-38-6 Purified Cesium Concentrator

5.8.1.2.1 Product Concentrators (E-5-2 and E-20-3) and Condenser. The Cell 5 and Cell 20 concentrators are identical in structure. They have one tube bundle containing 307 1-in. stainless steel tubes with an outside surface area of 1197 $ft^2$. The process solution is on the inside and the steam is on the outside of the tubes.

A reverse dished impingement plate is located in the upper shell which deflects the percolated liquid effecting a separation of liquid and vapor. An 8-in. downcomer connects the vapor section with the enlarged bottom section to allow recirculation of the concentrated liquid.

The deentrainment shell, directly above the vapor shell, contains a mist separator and spray nozzles. The mist separator consists of "Z" baffles which remove the entrained droplets of liquid from the vapors returning the liquid to the deentrainment section through a seal pot, which prevents vapors from bypassing the impingement plate and traveling directly to the mist separator.

Semicircular baffles, acting as tube bundle supports, prevent channeling of the steam through the tube bundle area. Expansion joints in both the evaporator shell and the downcomer minimize strain due to large temperature changes.

The horizontal, multipass, water-tube condensers located in Cells 5 and 20, have been modified and relocated from 221-U Building. Each condenser has 10-ft-long tubes (342) with a surface area of 895 $ft^2$, and there are 9 tube passes. Seven segmental baffles spaced throughout the length of each condenser distribute the vapor flow through the shell. An expansion joint is provided in the condenser shell to relieve stresses caused by shell temperature changes. Condenser 20-3 is equipped with four water spray nozzles. A sketch of the concentrator in Cell 5 is shown in Figure 5-34 and the condenser in Cell 20 in Figure 5-35.

TABLE 5-13. Concentrators and Condensers.

| Number | Name | Capacity (gal) | Duty (Btu/h) | Area ($ft^2$) | Bundle description |
|---|---|---|---|---|---|
| E-5-2 | Strontium concentrator | 300 | 4,500,000 | 896 | 307 Vert. tubes 1-12 BWG x 14 ft 2-7/8 in. |
| E-20-2 | Cesium concentrator | 300 | 9,000,000 | 896 | 307 Vert. tubes 1-12 BWG x 14 ft 2 7/8 in. |
| E-23-3 | Waste concentrator | 3,000 | 27,000,000 | 1,850 | West-687 Vert. tubes 1 1/4 OD-BWG x 10 ft |
| | | | 24,000,000 | 1,290 | East-630 Vert. tubes 1-12 1 OD 12 BWG x 10 ft |
| E-5-3 | Strontium condenser | --- | 4,500,000 | 895 | 342 Hor. tubes 1-12 BWG x 10 ft |
| E-20-3 | Cesium condenser | --- | 9,000,000 | 895 | 342 Hor. tubes 1-12 BWG x 10 ft |
| E-23-4 | Waste condenser | --- | 30,000,000 | 1,340 | 568 Hor. tubes 1-12 BWG x 10 ft |
| E-22-3 | Vessel vent heater | --- | 200,000 | 190 | 91 Hor. tubes 1-12 BWG x 9 ft |
| E-22-4 | Vessel vent condenser | --- | 2,000,000 | 895 | 342 Hor. tubes 1-12 BWG x 10 ft |
| E-22-7 | Scrubber vent heater | --- | 50,000 | 40 | 51 Hor. tubes 1-12 BWG x 3 ft |
| E-38-6 | Purified cesium concentrate | 100 | 1,000,000 H<br>10,500 C. | 140 | 53 Vert. tubes 1-12 BWG x 10 ft |
| E-38-7 | Purified cesium condenser | | 6,000,000 | 140 | 55 Vert. tubes 1-12 BWG x 10 ft filled with pall rings |

H = Heat.
C = Cool.

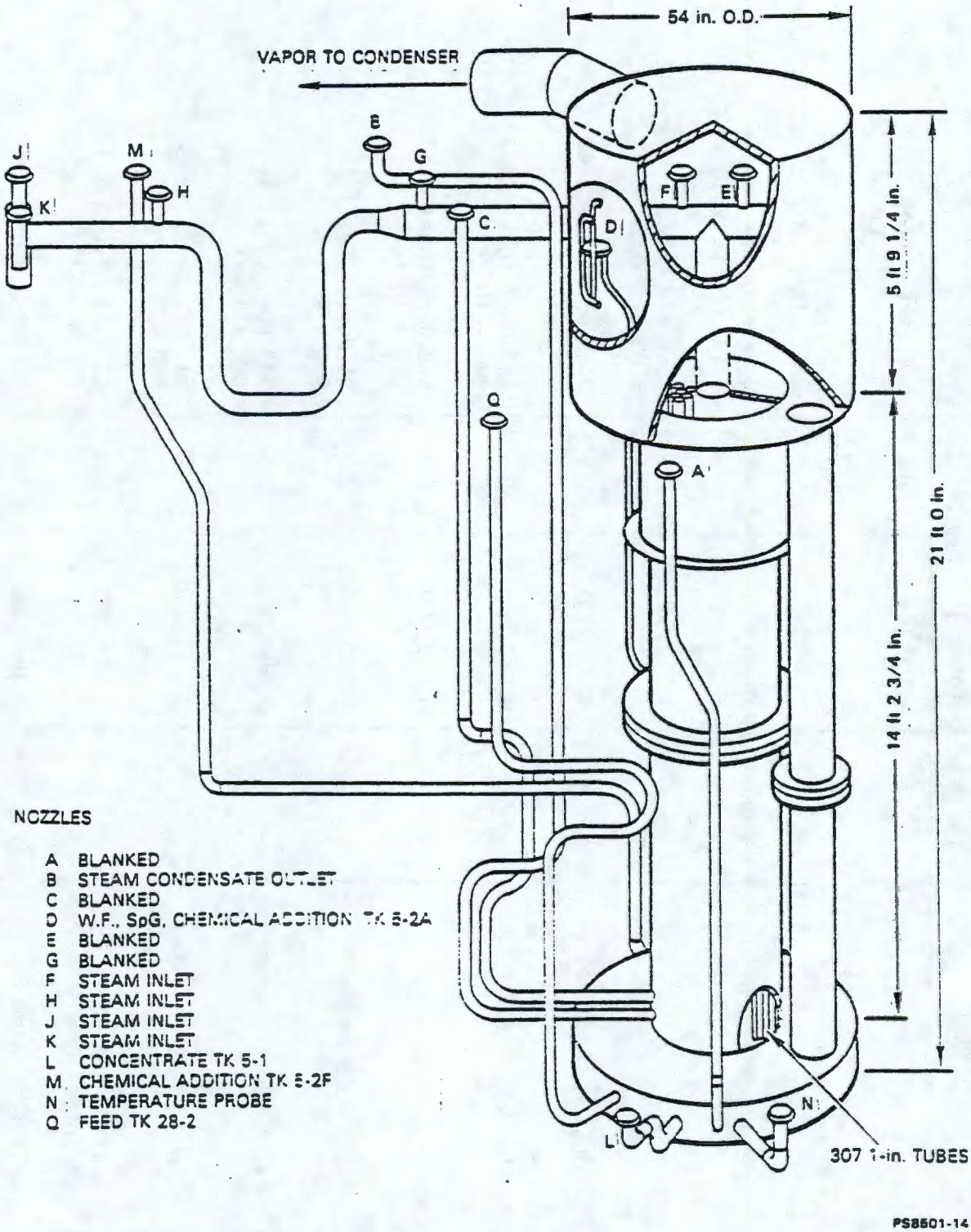


FIGURE 5-34. Concentrators (E-5-2, E-20-2).

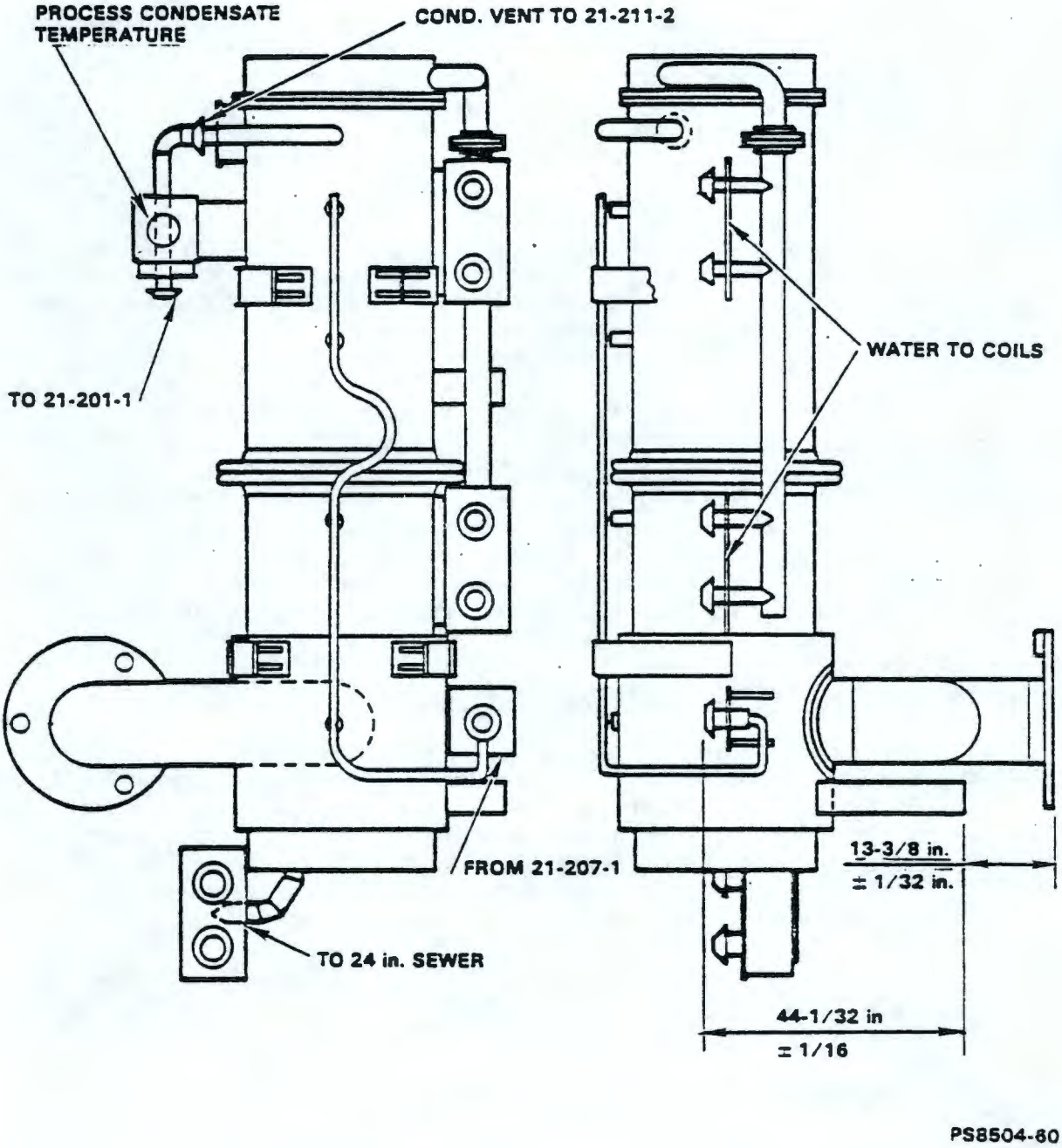


FIGURE 5-35. Condensers (E-5-3, E-20-3).

5.8.1.2.2 Cell 23 Concentrator Assembly. The elevation view of the whole concentrator assembly is shown in Figure 5-36 and the plan view of the E-23-3 concentrator is shown in Figure 5-37.

- Concentrator E-23-3

  This 3,000-gal-capacity concentrator is a vertical, single-pass shell-tube, thermal-recirculated and steam heated evaporator. It has two removable stainless steel tube bundles located in 55-in.-dia. and 14-ft 5-in.-high cylinders. The west bundle has an inside area of 1,850 $ft^2$ and design heat duty of 27 million Btu/h.

  The 687 tubes in the west bundle are 1 1/2 in. dia., and the 630 tubes in the east bundle are 1 in. dia. Both bundles have four steam inlets and one steam condensate outlet on top and they all have baffles in the shell to ensure that the shell-side fluid will flow across the tubes and thus induce higher heat transfer. During the periods of sensitive operation, the east bundle is used, since it is easier to control, especially at startup.

  A 30-in. draft tower is situated between the tube bundles. The liquid, induced by boiling, circulates down the draft tower and back into the tube bundle sections. The overflow column, located next to the draft tower, contains the outlet for the concentrated solution to TK-23-1 as well as the weight factor and specific gravity dip tubes. The concentrator has a seal pot venting to the air tunnel. If the seal-pot were allowed to become empty, the concentrator would loose vacuum, resulting in loss of operating efficiency.

- Deentrainer D-23-2 and Condenser E-23-4:

  The vapors travel up through the D-23-2 deentrainment vessel to the E-23-4 condenser. The condensate from the condenser is then routed to the BCP (process condensate) tank in 221-BB. The 60-in. dia. and 7-ft-high deentrainment vessel contains two separator pads which are made of knitted wire mesh. The low pressure drop across the separators allow the vessel to collect most of the liquid that escaped from the concentrator.

  The condenser, 38 in. dia. and 10 ft in length, is situated horizontally above the concentrator. It is water cooled and has coil surface area of 1,340 $ft^2$ and heat duty of 50 million Btu/h.

5.8.1.2.3 Cesium Concentrator E-38-6 and Condenser E-38-7. The cesium concentrator (Fig. 5-38) is a thermosyphon-type unit 18 ft 3 in. high. The concentrator consists of a lower section containing a tube bundle, cooling section, and return leg. The upper section contains a packed steam stripper and entrainment separator.

ORIGINAL DOCUMENT MISNUMBERED

5-108, 109, 110 DO NOT EXIST

9 3 1 2 8 1 9 1 9 1 5

THIS PAGE INTENTIONALLY
LEFT BLANK

The tube bundle contains 53 1-in. OD, 0.188-in.-wall vertical tubes inside a shell 12-in. ID. The tube bundle is 10 ft from tube sheet to tube sheet. Both shell and tubes are single pass. The tubes are installed on an 1 3/8-in. triangular pitch and provide a heat transfer surface area of 87 $ft^2$ based on the inside surface of the tubes (140 $ft^2$ outside area). Process solution flows through the tubes and steam through the shell.

The lower section of the concentrator below the tube bundle and return leg is 4-in. ID. A portion of this section is covered by a cooling jacket consisting of two separate sections. Cooling water circulates through each jacket section in an annular space baffled by a continuous spiral running the length of the jacket. Each jacket section contains a single convolution bellows-type expansion joint.

The packed steam stripper is located directly above and between the tube bundle and liquid return leg. A distributor plate 11 3/4 in. dia. is located above the top of the packing. A removable wire mesh deentrainment pad is located inches above the top of the distributor plate.

The concentrator is equipped with a seal pot designed to relieve pressure greater than 25 in. WG or vacuum greater than 60 in. WG. The seal pot contains approximately 3.3 gal of water.

The overall capacity of the concentrator is approximately 100 gal. At 100% submergence of the tube bundle, the concentrator would contain about 54 gal of liquid. To utilize 100% of the cooling jacket area would require about 9.5 gal of water.

The condenser (E-38-7) is a vertical shell and tube unit mounted on top of the effluent receiver tank (TK-38-4). The shell is 12-in. ID containing 55 tubes on a triangular pitch. The tube bundle is 10 ft from tube sheet to tube sheet. Stacked end on end in each tube are stainless steel pall rings. Heat transfer area based on the inside surface of the tubes (process side) is 113 $ft^2$. Both shell and tubes are single pass. The shell contains two offset segmental baffles equally spaced in the shell at 40 in. Across all tube openings in both tube sheets is a grid of flatbar for packing support. The bundle shell contains a single convolution, bellows-type expansion joint.

5.8.1.2.4 Concentrator Interlocks (Ref. 5-33). The concentrators are equipped with interlocks (H-2-35305, H-2-35323) designed to automatically shut down the system in the event that any of the following conditions occur during startup operation or shutdown of the system. The concentrators (E-5-2 and E-20-2) are equipped with one-tube-bundle system but (E-23-3) has a two-tube bundle system and thus, the instrumentation is duplicated for the second bundle (Fig. 5-39).

- High pressure steam to the tube bundles--The monitoring pressure switch, PS-1 (Hi), dual contacts open, deactivating the system and activating a visual and audible annunciation system, PA-1 (Hi).

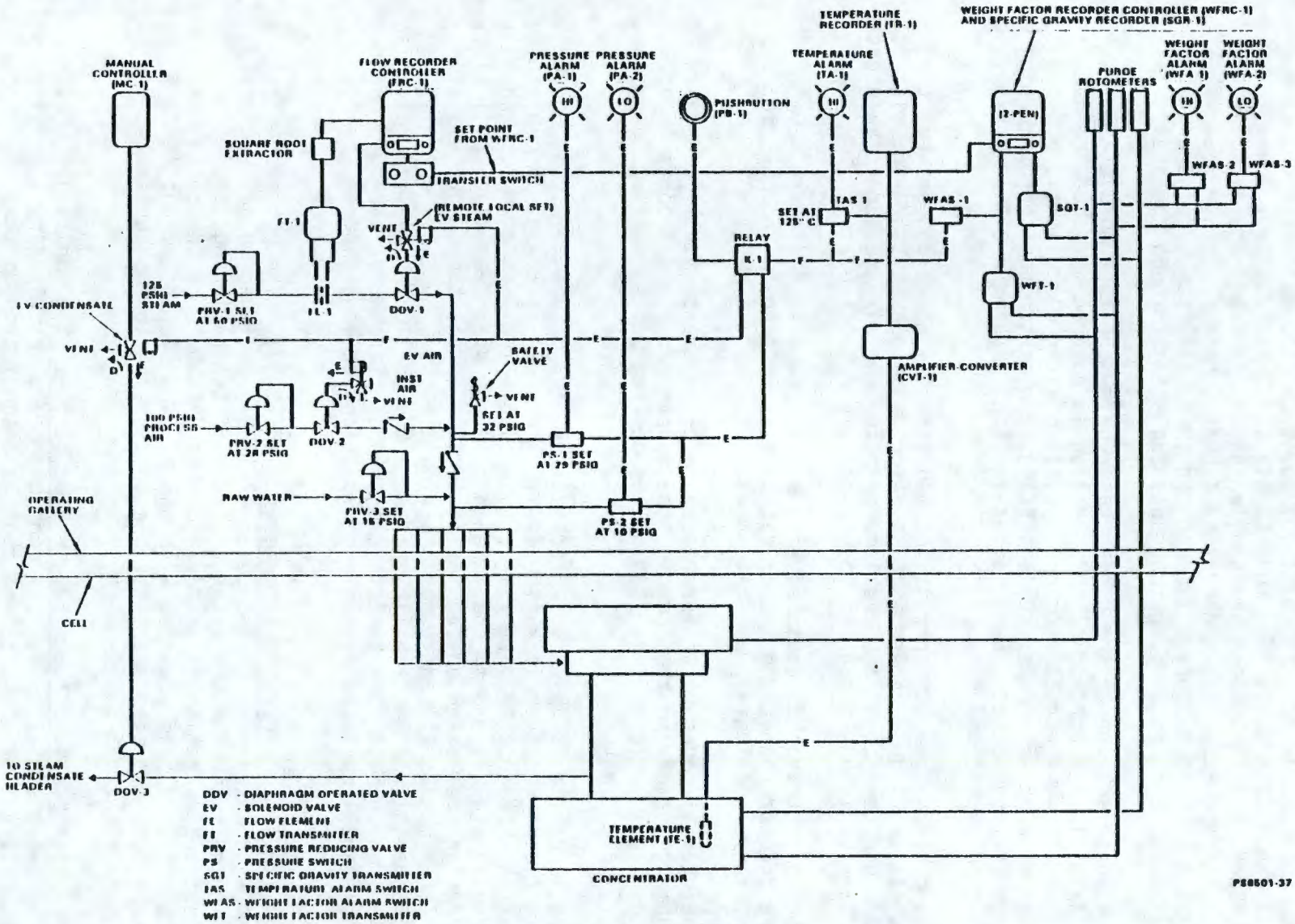


FIGURE 5-39. Concentrator Tube Bundle Control System.

- Low pressure in the tube bundles--The monitoring pressure switch, PS-2 (Lo), dual contacts open, deactivating the system and activating a visual and audible annunciator system, PA-2 (Lo). This provides air pressure to the tube bundle to minimize leaking of process solution into the bundle.

- Low weight factor in concentrator--The monitoring pressure switch WFAS-2 (Lo), contact open, deactivating the system.

- High temperature in concentrator--The monitoring pressure switch, TAS-1 (Hi), dual contacts open, deactivating the system and activating a visual and audible annunciator system, TA-1 (Hi).

- Operation--the occurrence of any one of the above events deenergizes the relay (K-1) and the solenoid valve (EV-STM) causing the diaphragm-operated steam valve (DOV-3) to close. The solenoid valve (EV-COND) is deenergized while the solenoid valve (EV-AIR) is energized, closing the steam condensate valve (DOV-3), and opening the air valve (DOV-2), thus pressurizing the tube bundle with air.

Raw water addition to the tube bundle requires holding the pushbutton (PB-1) in until it is pressurized to 10 psig which will energize the solenoid valve (EV-COND), opening the steam condensate valve (DOV-3), and the raw header block valve upstream from the raw water pressure-reducing valve (PRV-3).

5.8.1.3 Centrifuge (Fig. 5-40). Cells 12, 13, and 32 each have a centrifuge and a supernatant receiver. The principal components of a centrifuge include: a) a solid cylindrical bowl, b) a vertical spindle from which the bowl is axially suspended, c) an electric motor directly connected to the spindle, and d) an outer cylindrical case which encloses the rotating bowl. These components are mounted on a raised concrete foundation so that the bowl effluent will drain by gravity through an opening near the bottom of the outer cylinder to the supernatant receiver. The entire assembly is designed for remote operation and maintenance. All parts in contact with process solutions or fumes are stainless steel.

The bowl of the centrifuge is solid and measures 40 in. in dia. and 24 in. in height. Overflow diameter of the bowl is 28 in. The capacity of the bowl when not spinning is 125 gal static; however, during operation the maximum holdup is 60 gal. The holdup may be reduced by adjusting hydraulically operated skimmers with which each centrifuge is equipped. Three horizontal baffle plates, with weep holes equally spaced around the inside of the bowl, will retain 60 gal while skimming; however, the solids are generally held to 20 gal or less to maintain high efficiency. The bowls and the cases are equipped with sprays supplied by 230-ft head pumps from scale tanks located in the operating gallery.

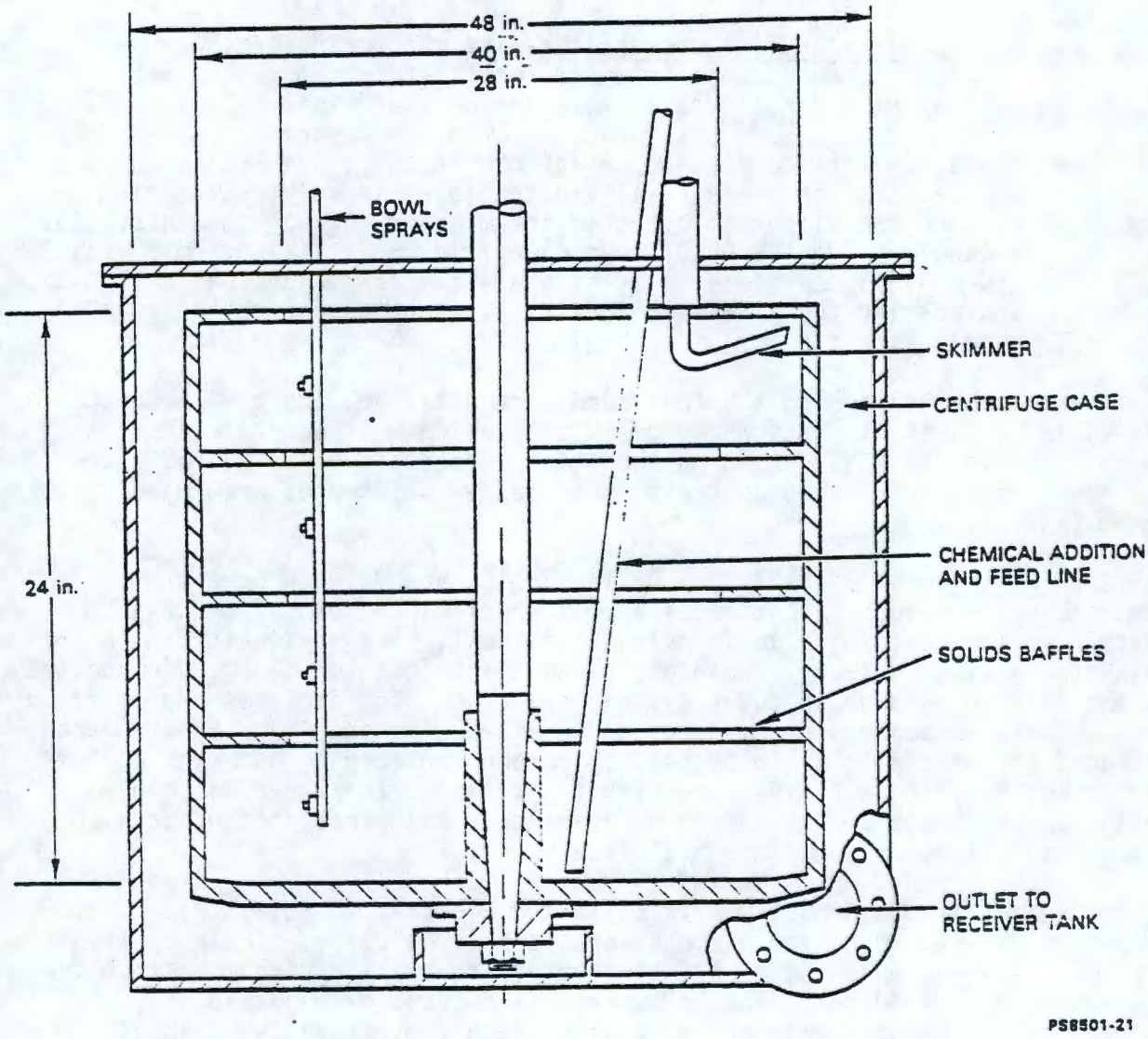


FIGURE 5-4.0. B Plant Centrifuge Bowl.

A 440-V, 40-hp electric motor rotates the bowl at 1,740 rpm or 870 rpm with a corresponding centrifugal force of 1,720 G (1,720 times the force of gravity) and 430 G at the bowl wall. Corresponding forces at the overflow point are 300 G at 870 rpm and 1,200 G at 1,740 rpm. it is possible to obtain other centrifuge speeds by intermittent operation of the drive motor.

A centrifuge is slowed or braked by applying a direct current to the motor windings after the AC power has been removed.

Each centrifuge is equipped with a tachometer, a weight factor monitor, a vibration meter, and a temperature element in the bottom of the bowl.

5.8.1.3.1 Centrifugation Batch Size (Ref. 5-40). The volume of the slurry centrifuged per batch is normally calculated so as not to exceed 15 gal of solids per batch. This limit helps insure adequate solids residence time and prevents inadvertent solids transfer to the supernate during bowl skimming operations. A laboratory test of a feed sample will provide a solids volume percent value from which the optimum number and size of the centrifugation batches can be calculated as in the following example.

| | |
|---|---|
| Feed volume | = 2,000 gal, caustic butt volume = 150 gal |
| Vol% solids | = 4% |
| Total solids | = (2,000) x (0.04) = 80 gal |
| Minimum batches | = 80/15 = 5.3 or 6 equal size batches |
| | 2,000 + 150/6 = 350 gal |

A rough estimate of volume percent solids can be obtained from Figure 5-41 using the total molar concentration of metallic impurities (excluding Ba, Ca, and Na) as an index.

5.8.1.3.2 Safety Consideration. The centrifuge should be operating above 400 rpm to force oil to the upper drive head bearing since it will not be reliably lubricated below this speed.

- Excessive Temperatures

  The large starting current required to bring the centrifuge from a stop to 870 rpm and from 870 rpm to 1,740 rpm causes an appreciable temperature increase in the motor windings. The centrifuge motor windings should be allowed to cool for approximately 10 min after either of these operations before increasing the centrifuge load; for example, going from 870 to 1,740 rpm or starting centrifugation. Braking the centrifuge also produces heat in the motor since an electromagnetic field is set up in the motor windings to slow the armature. The motor should be allowed to cool for a minimum of 10 min after this operation.

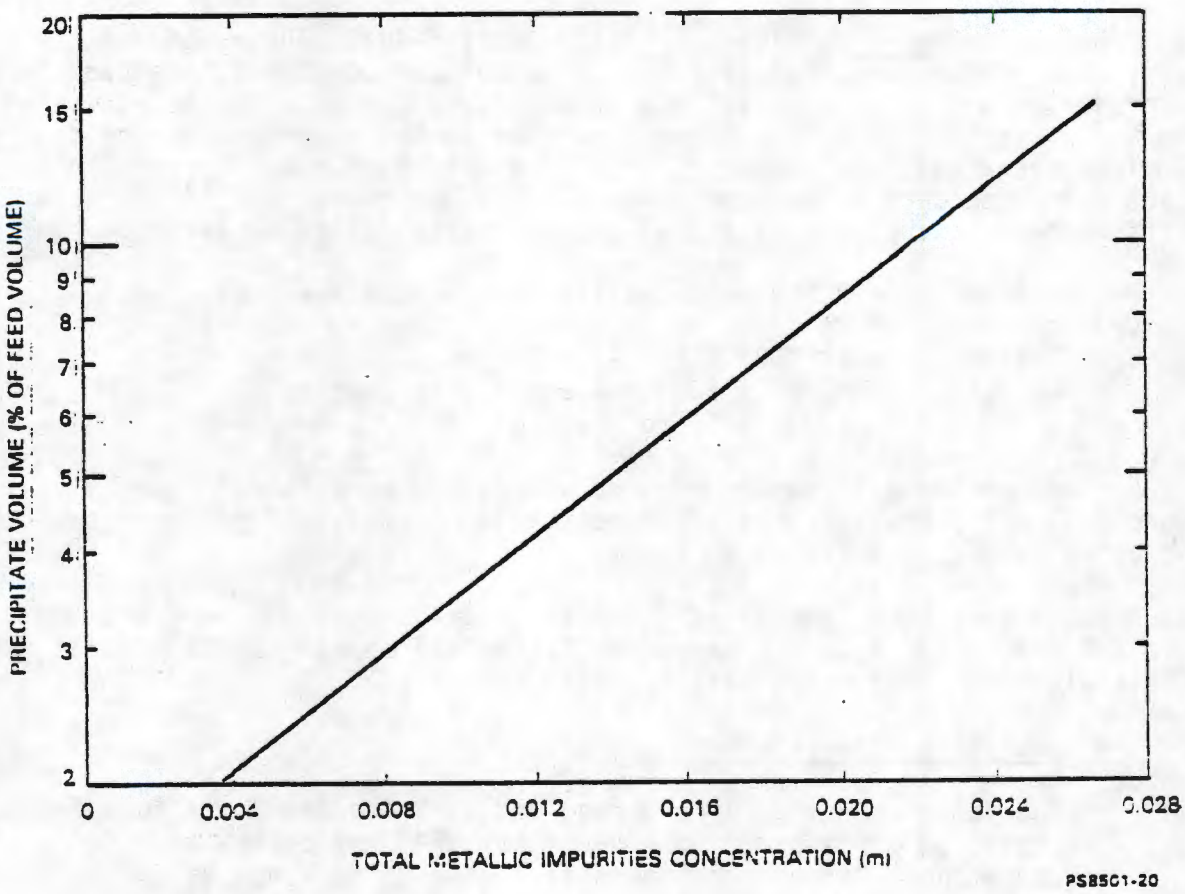


FIGURE 5-41. Total Metallic Impurities Concentrated - (M) versus Precipitation Volume (% of feed volume)

- Bowl Loading

  Every effort should be made to avoid starting up a loaded bowl which may be unbalanced. There are certain critical speeds characteristic of the centrifuge which produce excessive vibration. Ordinarily these are no problem since the bowl just momentarily passes through these speeds while going up to operating speed. However, the centrifuge should not be routinely operated at these speeds (400 to 500 and 1,200 rpm).

- Skimming

  Before starting the centrifuge, the skimmers should always be checked to be sure they are in the "out" position.

5.8.1.4 Ion Exchange Column. The ion-exchange columns are used in the cesium purification process. One ion-exchange column is located in Cell 18 and another in Cell 38.

5.8.1.4.1 Cell 18, Ion-Exchange Column. The ion exchange column, T-18-2, is a Class I vessel 6 ft in diameter and 15 ft high. For down-flow operation, solutions enter the column at the top through a cage 3 ft in diameter made of 80 mesh stainless steel screen attached to the inside top of the column. The screen cage covers the outlets to nozzles B, C, F, and H. Solutions are collected near the bottom of the column in a 10-arm "spider" 64 in. dia. The arms of the spider are covered with a 50 mesh stainless steel screen. The lower 13 ft of the column are filled with an ion exchange medium which is added to the column as a slurry through a nozzle which bypasses the top screen. The ion exchange media may be removed by jetting it through a drain line located below the bottom collection spider. Instrumentation on the ion exchange column includes an ion exchange resin-level indicator, top and bottom pressure indicators, and a temperature indicator. Figure 5-42 is a schematic of the ion exchange column.

5.8.1.4.2 Cell 38, Ion Exchange Column. The ion exchange column, T-38-5 is a vessel 12 1/4 in. ID by 13 ft 8 1/4 in. high. The column is filled to a height of 12 1/2 ft with 10 1/2 $ft^3$ of synthetic zeolite ion exchange medium. The 20 to 50 mesh zeolite is contained between two 80-mesh screens, top and bottom. The zeolite is permanently installed and cannot be replaced. Overall height between screens is 12 ft 9 in. The column is equipped with a cooling jacket which provides 40 $ft^2$ of heat transfer surface area. Cooling water flows through the jacket in a 5/16 in. annular space, baffled by a continuous spiral running the length of the jacket. A simplified sketch of the ion exchange column is shown in Figure 5-43.

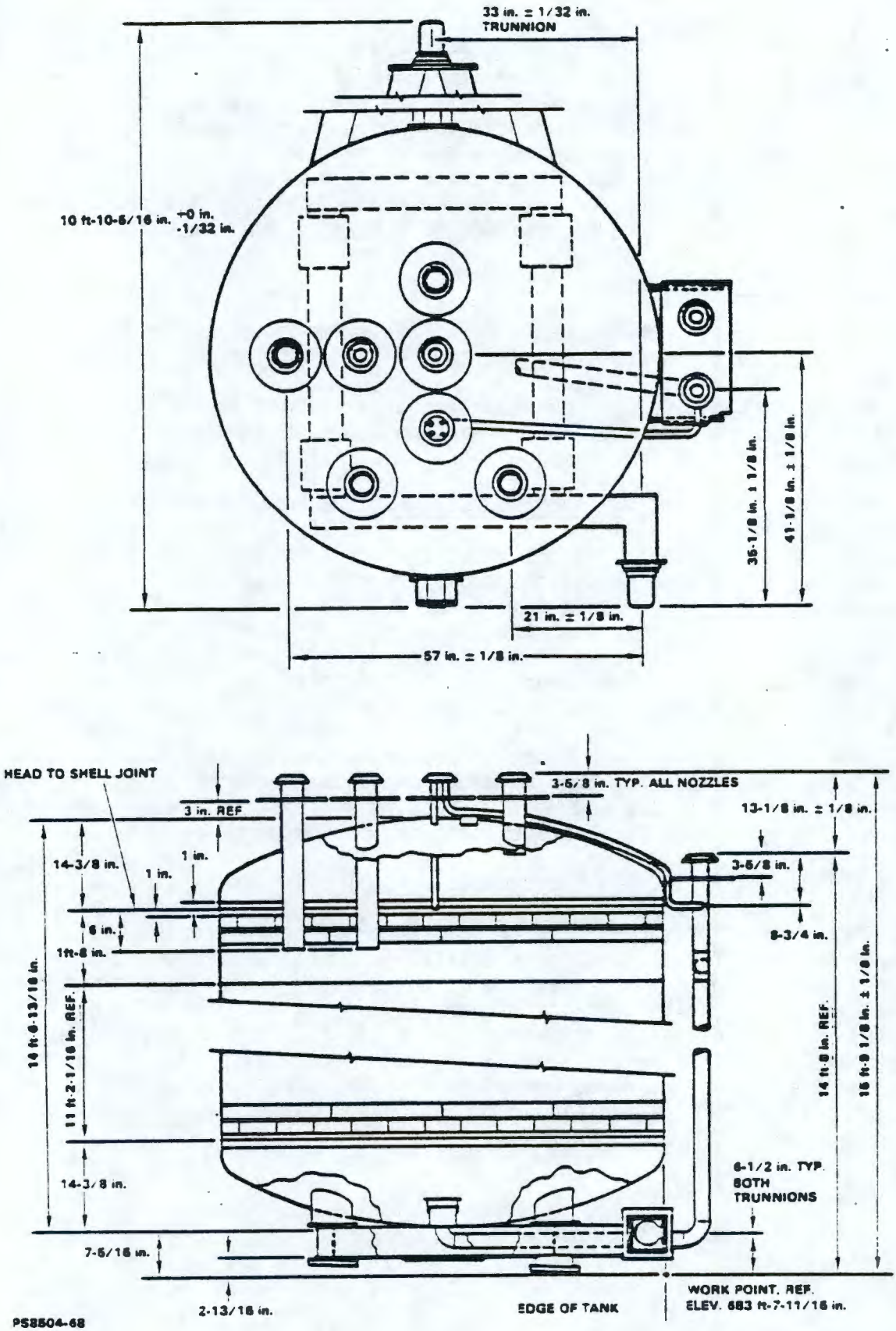


FIGURE 5-42. Cell 18 Ion Exchange Column.

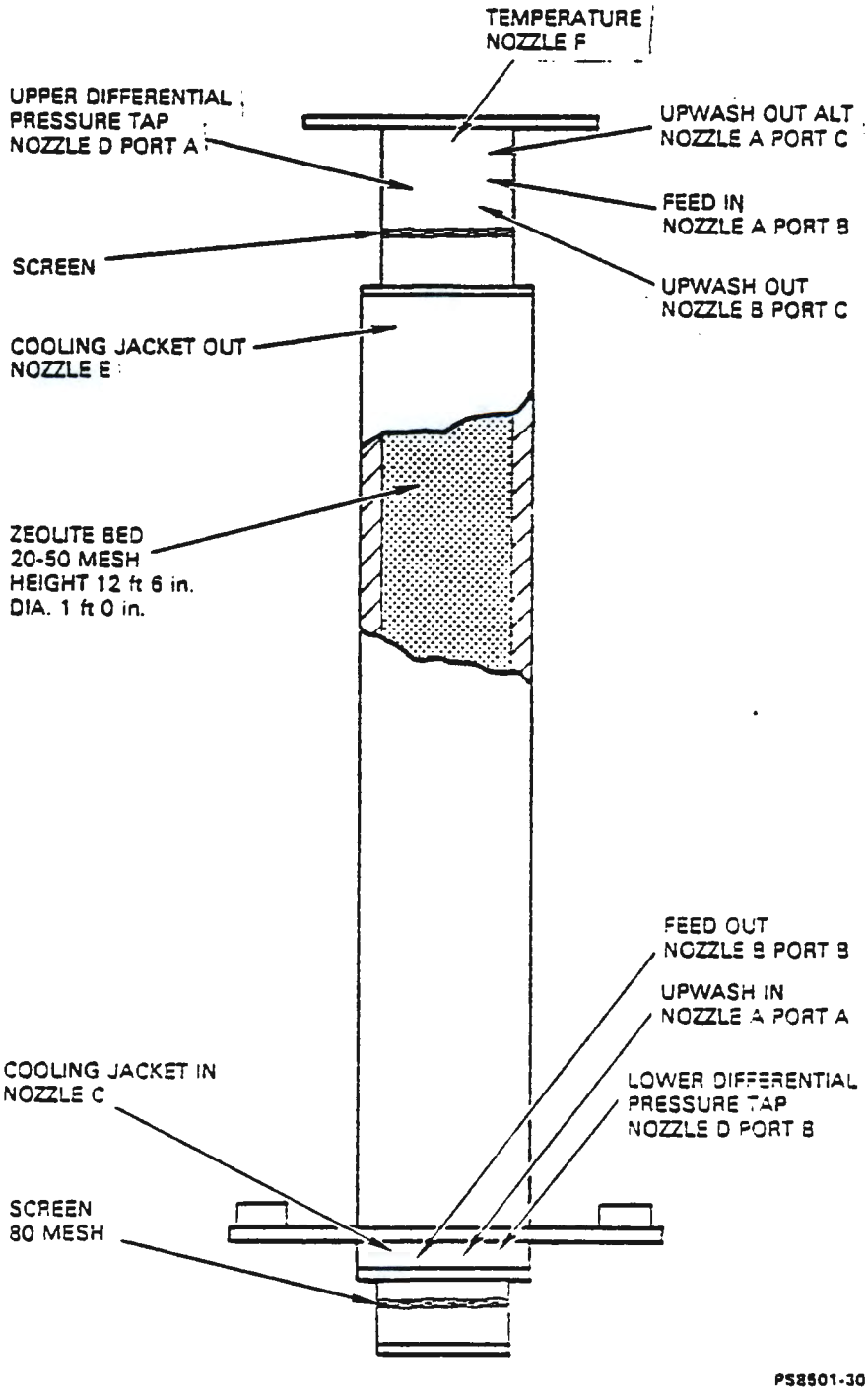


FIGURE 5-43. Cell 38 Ion Exchange Column.

5.8.1.5 Solvent Extraction Columns (Table 5-14). The B Plant solvent extraction battery is used to recover strontium and rare earths from current acid waste and acid sludge, and for purification of strontium. There are four pulse columns designated as:

T-30-1 1A - Extraction (Fig. 5-44)
T-28-1 1B - Strontium Strip (Fig. 5-45)
T-27-1 1C - Rare Earth Strip (Fig. 5-46)
T-29-1 1S - Scrub (Fig. 5-47)

The columns have upper and lower disengaging or "tub" sections with associated overflow, feed, and jet-out lines. The cartridge assemblies with perforated plates and tie rods made of 304L stainless steel are located between the two tub sections to increase the contact between the aqueous and organic phases within the columns.

The 1A column perforated plates have 0.1875-in.-dia. holes spaced 3/8 in. apart (center to center) in an equilateral triangle arrangement. The perforation nozzles point down.

The 1S, 1B, and 1C column plates have 0.125-in.-dia. holes in identically spaced arrangements as the 1A column. The perforation nozzles point down in the 1B column and up in the 1S and 1C columns.

In the 1A, 1S, and 1B columns louver-plate, phase redistributors are used to effect a swirling motion of the column contents during the upward phase of the pulse movement. This breaks up channeling. The louver-plates are located 6 in. above the bottom set of perforated plates and 6 in. below the top set.

The columns have either a top interface or a bottom interface. The interface location can be changed by changing jumpers.

Influent streams are introduced through distributors to provide uniform phase distribution across the column cross section. The discharge hole sizes are such that discharge velocities are high enough to cause some mixing, but not so great as to promote flooding due to excessive turbulence.

5.8.1.5.1 Pulse Generators. There are four pulse generators designated as: PS-30-1, PS-29-1, PS-28-1, and PS-27-1. They are reciprocating piston mechanisms driven by 15 hp motors with 18.5/1 worm gear reducers.

Pulsing of the liquid in the columns through the perforated plates enhances the mixing of the two phases and provides motive force for moving one phase through the other.

The pulse is transmitted from the pulser to the bottom of the column through a 4-in.-dia.-pulse leg filled with aqueous phase which is essentially stagnant. Leakage past the piston-cylinder assembly is returned to the appropriate process tank and must be maintained at a sufficiently low rate.

TABLE 5-14. Solvent Extraction Columns.

| Description | Column T-30-1 | Column T-29-1 | Column T-28-1 | Column T-27-1 |
|---|---|---|---|---|
| Overall height (ft) | 18.5 | 14.5 | 18.5 | 18.5 |
| Column ID (in.) | 20 | 20 | 20 | 15.25 |
| Plate section height (ft) | 14.0[a] | 10.0[b] | 14.0[a] | 14.33[c] |
| Plate hole diameter (in.) | 0.1875 | 0.125 | 0.125 | 0.125 |
| Hole centers (in.) | 3/8 tri | 3/8 tri | 3/8 tri | 3/8 tri |
| Perforations nozzle direction | Down | Up | Down | Up |
| Louver plate [d] | Yes | Yes | Yes | No |
| Column volume (gal) | 731 | 603 | 731 | 600 |
| Volume top dis. section (gal) | 218 | 156 | 218 | 185 |
| Volume plate contact section (gal) | 263 | 195 | 263 | 158 |
| Volume bottom dis. section (gal) | 250 | 252 | 250 | 257 |
| Dispersed phase | Aq | Aq | Aq | Org |
| Cont. phase | Org | Org | Org | Aq |

[a]Two 6.5 ft sections at 2 in. plate spacing.

[b]Two 4.5 ft sections at 2 in. plate spacing.

[c]One 10.33 ft section at 4 in. plate spacing.

[d]The louver plate is 6 in. below the upper section and 6 in. above the lower section.

[e]To overflow nozzle.

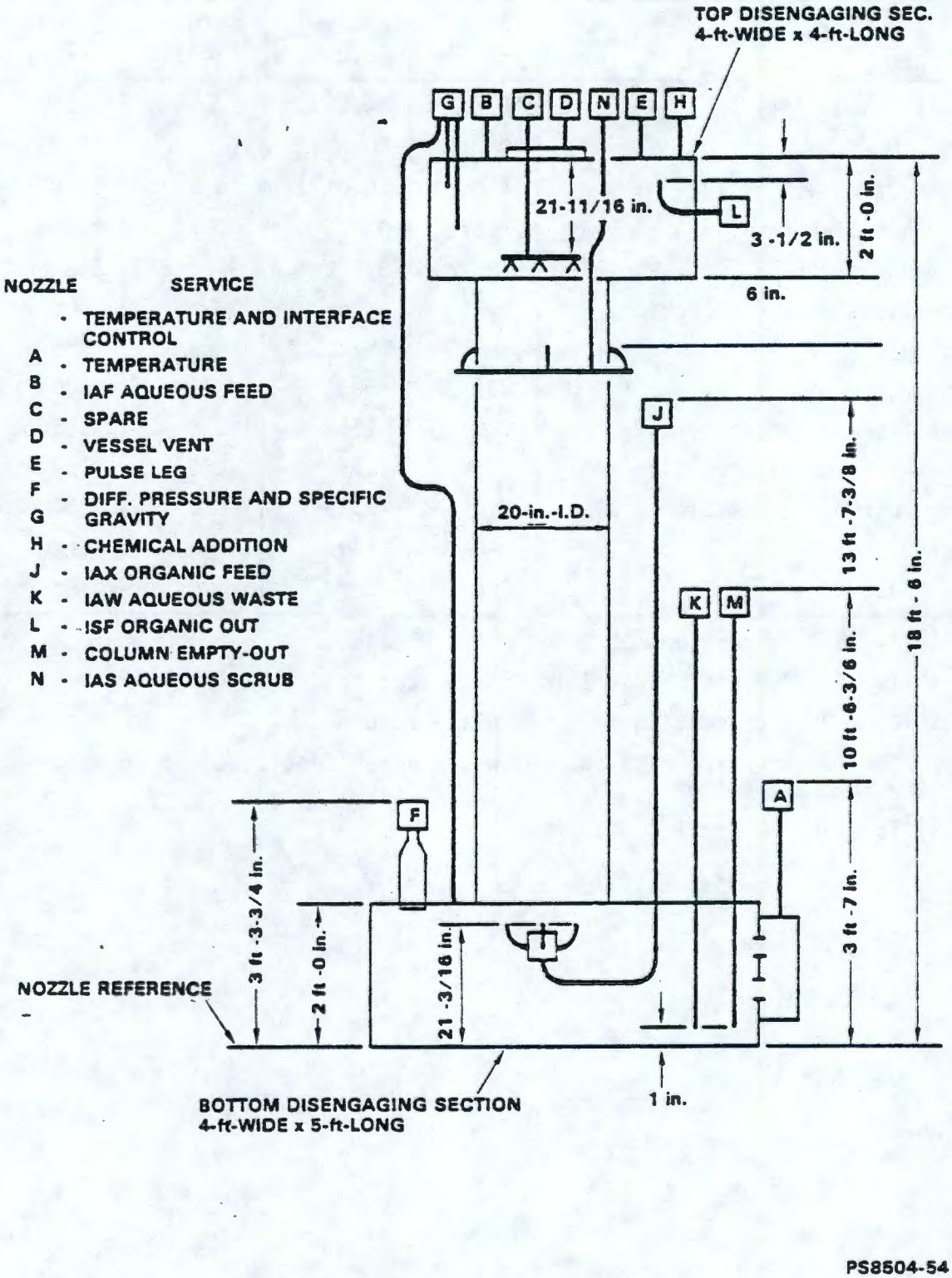


FIGURE 5-44. Solvent Extraction 1A Column.

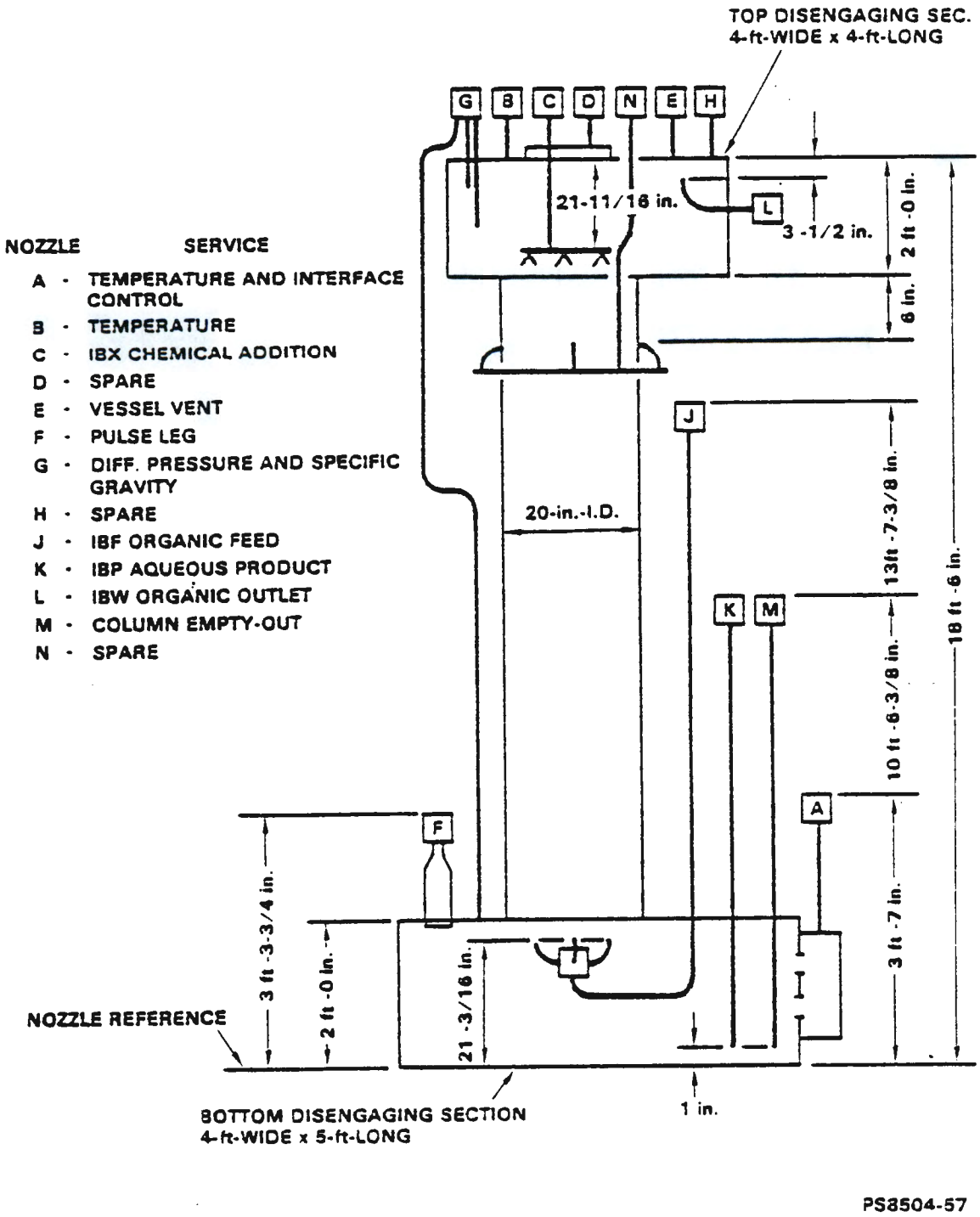


FIGURE 5-45. Solvent Extraction 1B Column.

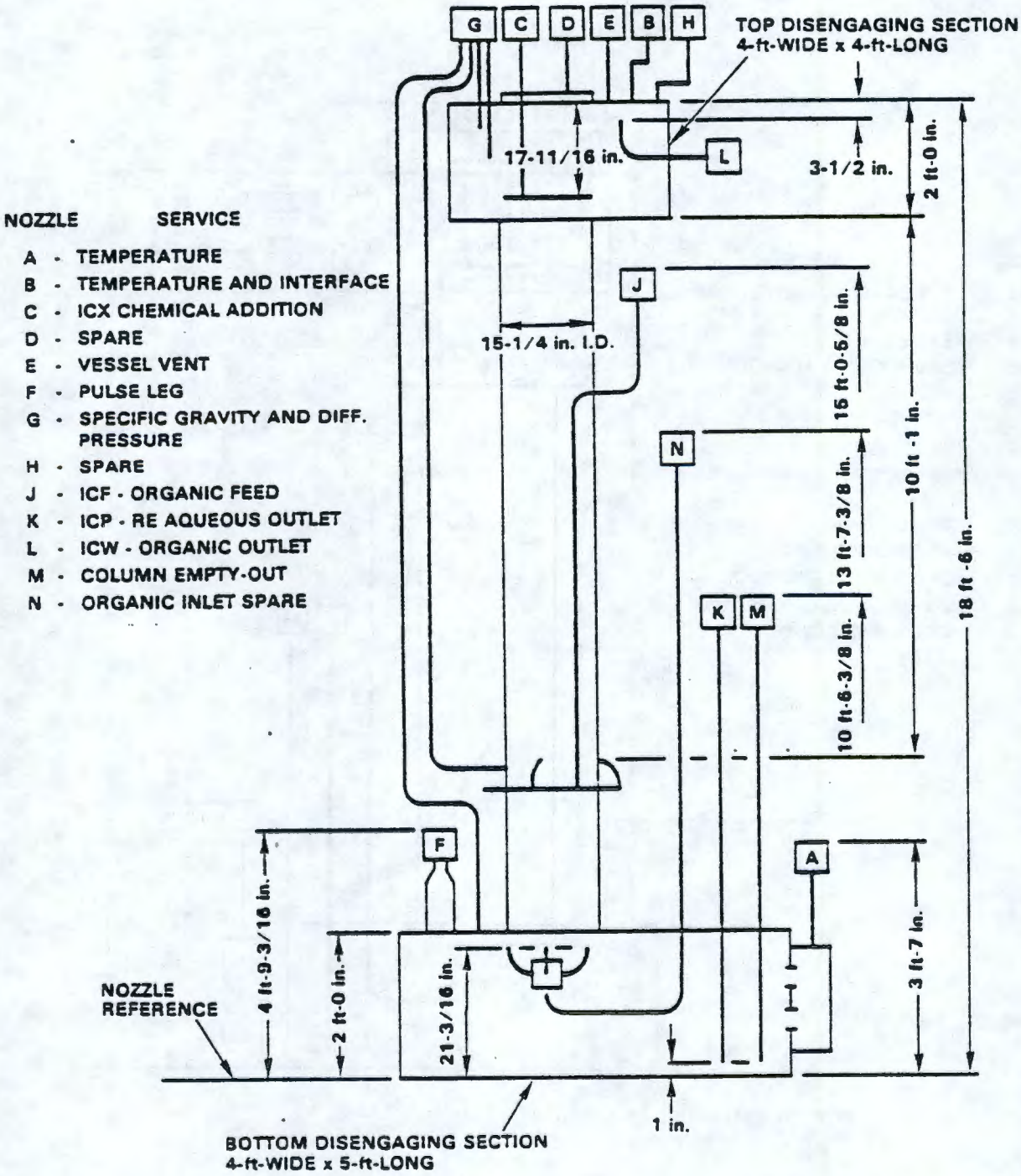


FIGURE 5-46. Solvent Extraction 1C Column.

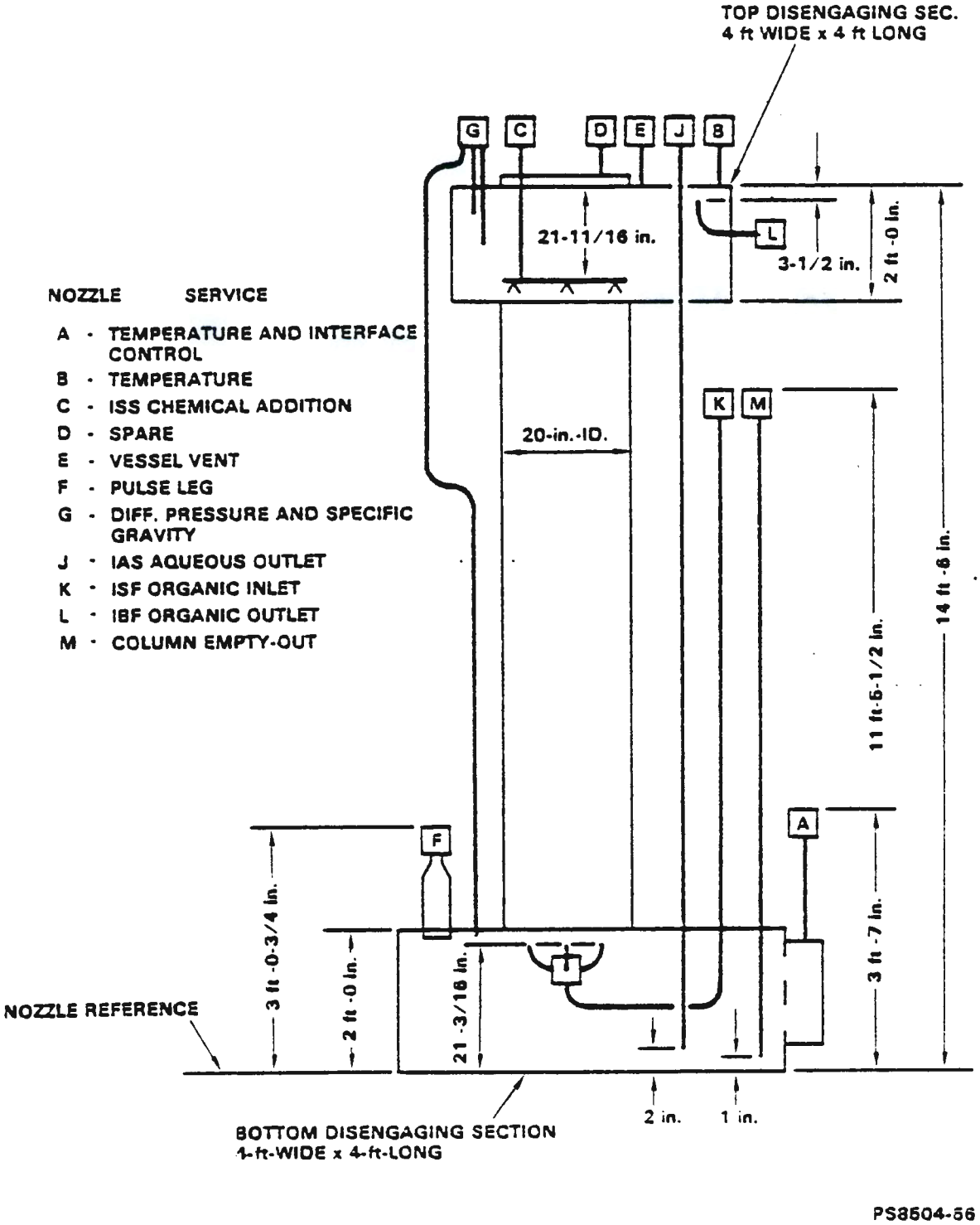


FIGURE 5-47. Solvent Extraction 1S Column.

The pulse amplitude is preset at 2 in. for 1A, 1B, and 1S and 1 in. for the 1C column. The frequency may be varied during column operation. The pulse volume is 85 in.$^3$, (approximately 0.4 gal) and the frequency range obtained is 30 to 890 cycles per min.

Two direct-current motor-generator sets with four exciters supply DC to the four normal or, if desired, to three normal and the one standby AC alternators. Field rheostats for varying the current of each of the exciters are provided. Eddy current couplings to the alternators provide the variable speed control for the pulser-motors.

Start-stop push buttons and a speed control are mounted on the operating panel board for each pulser. Selector switches for transfer of start-stop and speed controls from normal controller to the standby controller are provided for all four pulsers.

5.8.1.6 Pumps (Table 5-15). Pumps located within the process tanks are supported and fixed on the top of the vessel by means of a mounting flange resting on a nozzle flange. A vertical column, containing the pump stages as an integral part, extends downward to the desired distance. The number of stages is determined by the desired head and capacity of the pump. Solutions enter the pump axially at the lower end of the column and pass vertically upward through contiguous stages in the column. The pumped solution is discharged radially through a side arm at the top of the column section just above the mounting flange. The drive shaft extends concentrically through the column and is guided by sleeve bearings lubricated by the pumped solution. The drive shaft is directly coupled to the shaft of the electric pump motor mounted above the mounting flange. The weight of the shaft and the thrust developed during operation are absorbed by the motor bearings. A throttle bushing is provided at the point where the drive shaft emerges from the column section. Leakage past the throttle bushing is returned to the vessel.

5.8.1.7 Pump Agitators. In several B Plant tanks, limited space has necessitated modifying existing pumps into pump agitators. The modification consists of drilling three holes in the bowl of the bottom pump stage. A portion of the solution entering the first stage is forced through the holes back into the tank, and a portion passes on to the upper pump stages. Through the use of a diaphragm operated valve on the pump discharge line, a pump agitator may be used for two modes of operation: with the pump discharge valve closed, the solution will recirculate back to the tank agitating the contents of the tank and with the pump discharge valve open, the solution will be pumped and agitated simultaneously. Pump agitators cannot be used for batch contactors because it cannot pump without also agitating the solution.

5.8.1.8 Agitators (Table 5-16). All agitators in the plant are of stainless steel construction. The agitator shaft is connected through a flexible coupling to the output shaft of a speed reducer which is directly connected to the shaft of an electric motor. The agitator shaft is fabricated in two sections; the upper portion carries both thrust and radial bearing loads, while the lower portion carries the agitator blades. The two

TABLE 5-15. List of Pumps. (Sheet 1 of 2)

| Pump EPN | Service | Dimensions (dia.) | Capacity (gal/min) | Head ($ft^2$) | Motor (hp) | Pump heel (gal) |
|---|---|---|---|---|---|---|
| P-17-2 | Cesium supernatant receiver | 8 x 12 | 50 | 80 | 2 | 347 |
| P-18-1 | 1XW receiver | 9 1/2 x 12 | 50 | 90 | 3 | 45* |
| PA-18-3 | 1XF pump tank | 4 1/2 x 7 | 50 | 90 | 3 | 25.3 |
| P-19-1 | 1CP receiver tank | 10 x 16 x 14 | 15 | 110 | 2 | 787 |
| P-21-1-1 | Cesium eluent storage | 10 x 16 x 14 | 50 | 80 | 2 | 818.6 |
| P-21-1-2 | Cesium eluent storage | 10 x 16 x 14 | 15 | 70 | 3 | 818.6 |
| P-22-1 | Condensate receiver | 3 1/4 x 7 x 4 | 15 | 70 | 2 | 22.8 |
| P-23-1 | Nonboiling waste receiver | 3 1/4 x 7 x 4 | 10 | 25 | 2 | 43 |
| P-24-1 | Low level waste receiver | 10 x 16 x 14 | 45 | 90 | 2 | 1,244 |
| P-25-1 | Cerium waste receiver | 8 x 14 | 50 | 120 | .5 | 137.7 |
| P-25-2 | High level waste receiver | 8 x 14 | 50 | 120 | 5 | 122.3 |
| P-26-1 | Organic contractor | 9 x 9 | 75 | 45 | 3 | 1,830 |
| P-26-2 | 1CP contractor | 5 x 7 x 12 1/2 | 75 | 117 | 5 | 28 |

TABLE 5-15. List of Pumps. (Sheet 2 of 2)

| Pump EPN | Service | Dimensions (dia.) | Capacity (gal/min) | Head ($ft^2$) | Motor (hp) | Pump heel (gal) |
|---|---|---|---|---|---|---|
| P-26-3 | 1CP receiver | 5 x 7 x 12 1/2 | 75 | 117 | 5 | 31 |
| P-27-3 | 1CW contractor | 7 x 14 | 100 | 70 | 5 | 1,300 |
| P-27-4 | 1CF pump tank | 2 3/4 x 5 x 3 1/2 | 5 | 72 | 4 | 126 |
| P-28-2 | 1BP receiver | 5 1/2 x 12 | 10 | 90 | 5 | 82.3 |
| P-28-3 | 1AX makeup | 7 x 14 | 100 | 70 | 5 | 1,621.1 |
| PA-28-4 | 1BF pump tank | 2 3/4 x 5 x 3 1/2 | 8 | 72 | 4 | 11.8 |
| P-29-3 | 1AF pump tank | 9 1/2 x 5 x 14 | 5 | 110 | 6 | 90* |
| P-30-3 | 1AX pump tank | 9 1/2 x 5 x 14 | 10 | 110 | 6 | 92.1 |

TABLE 5-16. List of Agitators. (Sheet 1 of 4)

| Agitator (EPN) | Vessel service | Dimensions (dia. in inches) | Motor | | Shaft | | Impeller | | Minimum volume to agitate (gal) |
|---|---|---|---|---|---|---|---|---|---|
| | | | hp | rpm | rpm | Type | Diameter (in.) | Number of blades | |
| A-5-1 | Strontium concentrate receiver | 3 1/4 x 7 x 4 | 5 | 1,150 | 1,150 | prop | 8 | 3 | 140 |
| A-6-1 | Strontium storage | 8 x 14 | 7.5 | 1,750 | 186 | turb | 17 | 8 | 494.4 |
| A-6-2 | Strontium storage | 8 x 14 | 7.5 | 1,750 | 186 | turb | 17 | 8 | 508 |
| A-7-1 | Strontium storage | 8 x 14 | 5 | 1,150 | 150 | turb | 18 | 4 | 316 |
| A-7-2 | Strontium storage | 8 x 14 | 7.5 | 1,750 | 186 | turb | 17 | 8 | 320 |
| A-8-1 | Strontium storage | 8 x 14 | 5 | 1,150 | 100 | turb | 18 | 4 | 324 |
| A-8-2 | Strontium storage | 8 x 14 | 5 | 1,150 | 100 | turb | 18 | 4 | 333 |
| A-9-1 | Waste receiver | 8 x 14 | 5 | 1,150 | 100 | turb | 18 | 4 | 329 |
| A-9-2 | Supernatant storage | 8 x 14 | 5 | 1,150 | 100 | turb | 18 | 4 | 320 |
| A-11-1 | Slurry tank | 4 1/2 x 7 | 5 | 1,150 | 100 | turb | 14 | 4 | 69 |
| A-11-2 | Decant and Metathesis | 9 x 9 | 15 | 1,150 | 68 | turb | 36 | 8 | 368 |
| A-12-1 | Supernatant receiver | 9 x 9 | 15 | 1,150 | 68 | turb | 24 | 4 | 437 |
| A-13-1 | Centrifuge supernatant receiver | 9 x 9 | 5 | 1,750 | 150 | turb | 20 | 8 | 753.6 |
| A-14-1 | Undesignated | 4 1/2 x 7 | 5 | 1,150 | 100 | turb | 14 | 4 | 98.4 |
| A-14-2 | Cesium storage | 9 x 9 | 15 | 1,150 | 68 | turb | 24 | 4 | 490.8 |

TABLE 5-16. List of Agitators. (Sheet 2 of 4)

| Agitator (EPN) | Vessel service | Dimensions (dia. in inches) | Motor | | Shaft | | Impeller | | Minimum volume to agitate (gal) |
|---|---|---|---|---|---|---|---|---|---|
| | | | hp | rpm | rpm | Type | Diameter (in.) | Number of blades | |
| A-16-1 | Undesignated | 6 1/2 x 14 | 5 | 1,150 | 100 | turb | 14 | 4 | 348.6 |
| A-17-1 | Cesium storage | 8 x 14 | 7.5 | 1,750 | 186 | turb | 17 | 8 | 423 |
| A-17-2 | Cesium supernatant receiver | 8 x 14 | 5 | 1,750 | 150 | turb | 17 | 8 | 347 |
| A-18-1 | 1XW receiver | 9 1/2 x 12 | 5 | 1,150 | 100 | prop | 9 | 3 | 176.2 |
| PA-18-3 | 1XF pump tank | 4 1/2 x 7 | 3 | -- | -- | pump | -- | -- | 25.3 |
| A-19-1-1 | 1CP receiver tank | 10 x 16 x 14 | 7.5 | 1,750 | 186 | turb | 17 | 8 | 1,170.4 |
| A-19-1-2 | 1CP receiver tank | 10 x 16 x 14 | 7.5 | 1,750 | 186 | turb | 17 | 8 | 1,170.4 |
| A-20-1 | 1XP concentrate receiver | 3 1/4 x 7 x 4 | 2 | 1,150 | 1,150 | prop | 8 | 3 | 134.9 |
| A-21-1-1 | Cesium eluent storage | 10 x 16 x 14 | 7.5 | 1,750 | 186 | turb | 17 | 8 | 1,169.3 |
| PA-22-1 | Condensate receiver | 3 1/4 x 7 x 4 | 2 | --- | --- | pump | --- | -- | 22.8 |
| PA-23-1 | Nonboiling waste concentrate | 3 1/4 x 7 x 4 | 2 | --- | --- | pump | --- | -- | 33 |
| A-24-1-1 | Low level waste receiver | 10 x 16 x14 | 7.5 | 1,750 | 186 | turb | 17 | 8 | 1,244 |
| A-24-1-2 | Low level waste receiver | 10 x 16 x 14 | 7.5 | 1,750 | 186 | turb | 17 | 8 | 1,244 |
| A-25-1 | Cerium waste receiver | 8 x 14 | 7.5 | 1,750 | 186 | turb | 17 | 8 | 408.5 |
| A-25-2 | High level waste | 8 x 14 | 7.5 | 1,750 | 186 | turb | 17 | 8 | 399 |

TABLE 5-16. List of Agitators. (Sheet 3 of 4)

| Agitator (EPN) | Vessel service | Dimensions (dia. in inches) | Motor | | Shaft | | Impeller | | Minimum volume to agitate (gal) |
|---|---|---|---|---|---|---|---|---|---|
| | | | hp | rpm | rpm | Type | Diameter (in.) | Number of blades | |
| A-26-1 | Organic contractor | 9 x 9 | 5 | 1,150 | 1,150 | prop | 9 | 3 | 1,043 |
| A-26-2 | 1CP contractor | 5 x 7 x 12 1/2 | 5 | 1,150 | 1,150 | prop | 9 | 3 | 280 |
| A-26-3 | 1CW receiver | 5 x 7 x 12 1/2 | 5 | 1,150 | 1,150 | prop | 9 | 3 | 280 |
| A-27-2 | 1CP receiver | 5 1/2 x 12 | 5 | 1,150 | 1,150 | prop | 9 | 3 | 225 |
| A-27-3 | 1CW contractor | 7 x 14 | 5 | 1,150 | 1,150 | prop | 9 | 3 | 530 |
| PA-27-4 | 1CF pump tank | 2 3/4 x 5 x 3 | 5 | --- | --- | pump | --- | -- | 12.6 |
| A-28-2 | 1BP receiver | 5 1/2 x 12 | 5 | 1,150 | 1,150 | prop | 9 | 3 | 208.8 |
| A-28-3 | 1AX Makeup | 7 x 14 | 5 | 1,150 | 1,150 | prop | 9 | 3 | 547.1 |
| PA-28-4 | 1BF pump tank | 2 3/4 x 5 x 3 | 2 | --- | --- | pump | --- | -- | 11.8 |
| A-29-2 | 1AF makeup | 9 1/2 x 5 x 14 | 7.5 | 1,750 | 186 | turb | 17 | 8 | 377 |
| A-29-3 | 1AF pump tank | 9 1/2 x 5 x 14 | 7.5 | 1,750 | 186 | turb | 17 | 8 | 385.6 |
| A-30-2 | 1AW receiver | 9 1/2 x 5 x 14 | 7.5 | 1,750 | 186 | turb | 17 | 8 | 390 |
| A-30-3 | 1AX pump tank | 9 1/2 x 5 x 14 | 7.5 | 1,750 | 186 | turb | 17 | 8 | 355.3 |
| A-31-1 | PAS metathesis tank | 5 1/2 x 9 | 2 | 1,150 | 1,150 | prop | 8 | 3 | 212.3 |
| A-31-2 | Dissolved cake storage | 4 1/2 x 7 | 5 | 1,150 | 100 | turb | 18 | 4 | 154.9 |
| A-31-3 | PAS precipitator tank | 6 1/2 x 14 | 5 | 1,750 | 150 | turb | 20 | 8 | 308.2 |
| A-32-1 | Waste receiver | 9 1/2 x 9 | 5 | 1,150 | 150 | turb | 24 | 8 | 752 |
| A-33-1-1 | Treated PAS storage | 10 x 10 x 14 | 7.5 | 1,750 | 186 | turb | 17 | 8 | 1,308.8 |
| A-33-1-2 | Treated PAS storage | 10 x 10 x 14 | 7.5 | 1,750 | 186 | turb | 17 | 8 | 1,308.8 |

TABLE 5-16. List of Agitators. (Sheet 4 of 4)

| Agitator (EPN) | Vessel service | Dimensions (dia. in inches) | Motor | | Shaft | | Impeller | | Minimum volume to agitate (gal) |
|---|---|---|---|---|---|---|---|---|---|
| | | | hp | rpm | rpm | Type | Diameter (in.) | Number of blades | |
| PA-35-1 | Cask feed | 4 1/2 x 7 | - | 3 | - | - | - | - | - |
| A-35-2 | Cask waste | 9 x 8.83 | 285 | 10 | - | - | - | - | - |
| A-36-1 | Cesium storage | 5 1/2 x 9 x 14 | 68 | 3 | - | - | - | - | 543 |
| A-36-2 | Cesium storage | 5 1/2 x 9 x 14 | 68 | 3 | - | - | - | - | 537 |
| A-36-3 | Cesium storage | 5 1/2 x 9 x 14 | 68 | 3 | - | - | - | - | 502 |
| A-37-1 | Cesium storage | 5 1/2 x 9 x 14 | 186 | 7.5 | - | - | - | - | 330 |
| A-37-2 | Cesium storage | 5 1/2 x 9 x 14 | 186 | 7.5 | - | - | - | - | 317 |
| A-37-3 | Cesium storage | 5 1/2 x 9 x 14 | 84 | 3 | - | - | - | - | 397 |
| A-39-1 | WESF low level waste | 9 1/2 x 5 x 12 | 68 | 3 | - | - | - | - | 1,005 |
| A-39-2 | Cesium waste | 4 3/4 x 5 x 12.67 | 68 | 3 | - | - | - | - | 470 |
| A-39-4 | Strontium waste | 4 x 5 x 12 | 68 | 3 | - | - | - | - | 271 |
| A-39-5 | Strontium feed | 5 1/2 x 5 x 12 | 125 | 7.5 | - | - | - | - | 407 |

sections are joined together with a rigid, flange-type coupling. The upper section is sealed by a kerosene-lubricated Durametallic seal at the upper end of a cylindrical torque tube welded in the mounting flange. The torque tube also contains a grease-lubricated guide bearing near its lower end to provide shaft support near the point of load application. Contact of process solutions with the guide bearing is prevented by means of positive air pressure introduced to the torque tube. Kerosene drippings from the Durametallic seal and air escape through the clearance between the agitator shaft and the lower end of the torque tube.

5.8.1.9 Transfer Jets. Transfer jets are used for transferring various solutions. The rated water siphoning capacity ranges from 3 to 75 gal/min with somewhat smaller jets used in samplers. Solutions transferred by steam jet are diluted approximately 5%. Although steam is usually used for the motive fluid, both water and air may be used. Solutions at temperatures greater than about 145°F (62.7°C) cannot be jetted because suction of the solution is great enough to cause the solution to vaporize. However, submerged jets are capable of jetting solutions up to about 175°F (79.4°C).

5.8.1.10 Gang Valves. Gang valves are used to operate the steam jets in B Plant. A gang valve consists of four spring-closed globe-type valves with all working parts constructed of bronze. The four valves control steam, air, shut-off, and vent. The proper use of the gang valves prevents back flow of radioactive solutions into the partial vacuum created by condensation of steam in unpurged lines. The following four positions of a gang valve are used:

| Position | Gallery | Jet | Air | Steam | Operation |
|---|---|---|---|---|---|
| 1 | O | C | C | C | Normal Closed Position |
| 2 | C | O | O | C | Air purge of Jet or Sparger |
| 3 | C | O | C | O | Steam Supplied to Jet or Sparger |
| 4 | O | O | C | C | Maintenance Position - Jet Vented to Operating Gallery |

C = Closed.
O = Open.

5.8.1.11 Vessel Vent Equipment.

5.8.1.11.1 Ammonia Scrubber Tower, T-22-2. The ammonia scrubber tower (Fig. 5-48), set atop TK-22-1, is packed with 3/4 in. Intalox porcelain saddles to a bed depth of 13.75 ft with a distributor plate located in the upper section for proper distribution of the scrub solution. The present tower is equipped with a 12 in. OD by 4-in.-thick deentrainer pad. Present flowrates of 250 to 300 $ft^3$/min, the pressure drop across the pad is approximately 0.5 in. of water.

5.8.1.11.2 Off-Gas Heater, E-22-7. The off-gas travels from the scrubber tower to the off-gas heater, E-22-7 (Fig. 5-49), where the heating lowers the relative humidity of the off-gas.

The E-22-7 heater is a shell and tube heat exchanger with a single-tube bundle of 51, 1-in. OD, 12 BWG tubes arranged on a 1 1/4 in.-triangular pitch. The total tube bundle surface area is 40 $ft^2$ and the heater has a rated heat duty of 17,000 Btu/h using 225 psig steam. The steam is on the tube side while the off-gas is on the shell side of the heater.

5.8.1.11.3 E-22-3 Heater. The E-23-3 304 L stainless steel heater (Fig. 5-50) is a counter-current shell and tube heat exchanger with a single tube bundle of 91, 1 in. OD, and 12 Birmingham wall gauge tubes arranged in a 1 1/4-in.-triangular pitch. The tubes are 8 ft. long and the total tube bundle surface area is 190 $ft^2$. The heater has a rated duty of 200,000 Btu/h using 95 psig steam.

5.8.1.11.4 E-22-4 Condenser. The E-22-4 condenser (Fig. 5-51) was obtained from Cell 11 in 221-U Building. The 221-U condenser (E-6-5) was modified for use in the Vessel Vent 1 system. This condenser is a shell and tube heat exchanger with a single tube bundle of 342, 1 in. OD, 12 BWG tubes arranged in a 1 1/4 in.-triangular pitch. The tubes are 10 ft long and the total tube bundle surface area is 895 $ft^2$ with a rated cooling capacity of 2 million Btu/h using raw cooling water at 70°F.

5.8.2 Vessel Vent Systems (Ref. 5-35)

The primary function of the vessel vent system is to maintain the atmosphere of the canyon vessels, which contain solution of fission products of concentrations greater than 100 Ci/gal or solutions with temperatures greater than 70°C, at a vacuum with reference to the cell containing the vessel. The vessel vent systems associated with the process vessels form the primary containment and the vacuum with respect to the cell ensures preferential inleakage to the vessel rather than out leakage from the vessel during normal operation of the vessel vent systems.

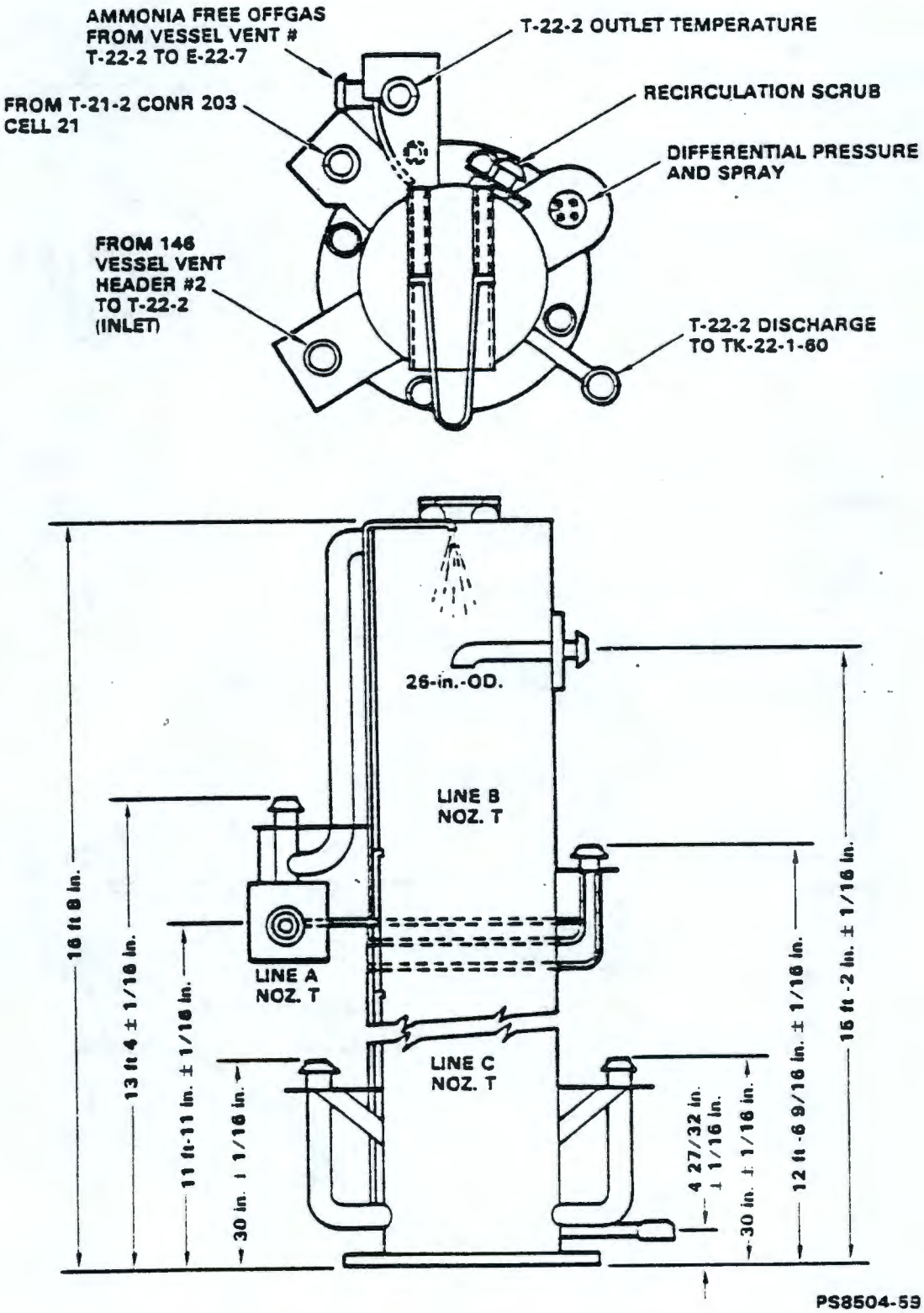


FIGURE 5-48. Ammonia Scrub Tower (T-22-2).

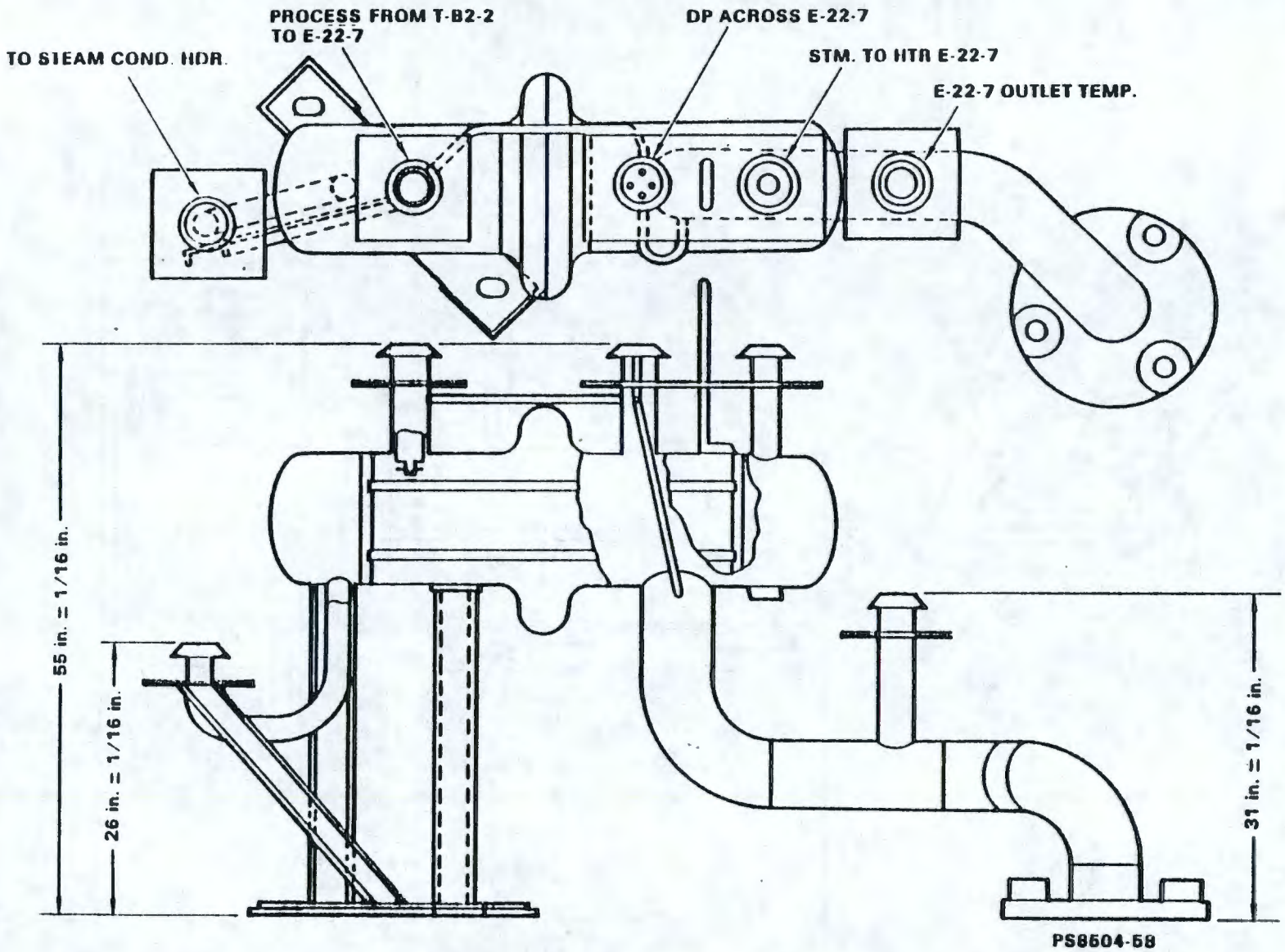


FIGURE 5-49. Off-gas Heater (E-22-7).

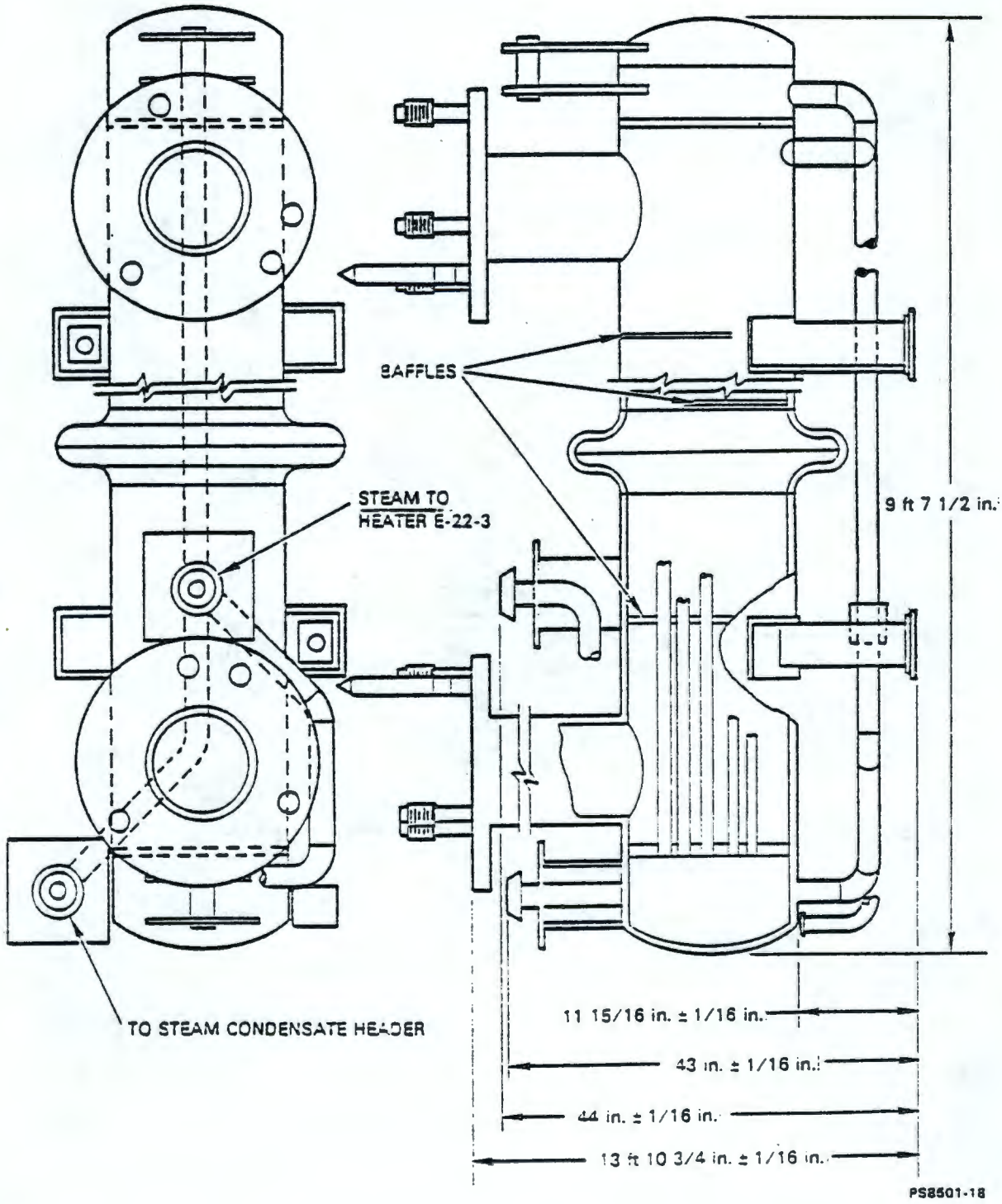


FIGURE 5-50. Heater Assembly (E-22-3).

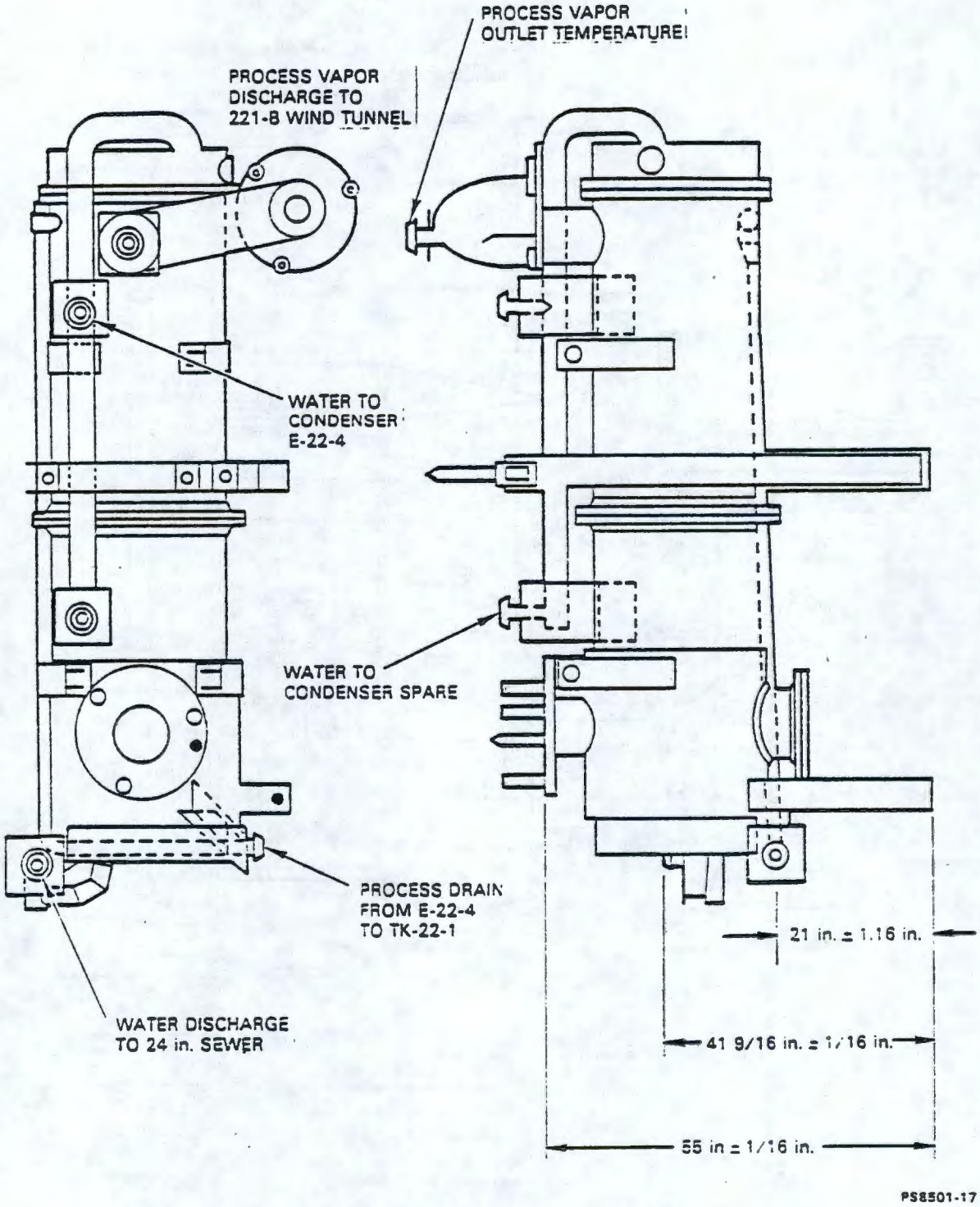


FIGURE 5-51. Vessel Vent Condenser Assembly E-22-4.

There are two separate vent systems and the equipment for both systems is located in Cell 22 (Table 5-17).

- Vessel Vent No. 1: This system is designed to vent and filter the gases from those process vessels which do not contain ammonia. Vessels served by Vent Header No. 22 are listed on Table 5-18, Fig. 5-52.

- Vessel Vent No. 2: This system is designed to vent, scrub, and filter gases from process vessels in which ammonia is present. Some vessels vent to the main vent header 146 via two other headers 69A and 69B while others vent directly to heater 146 (Table 5-18, Fig. 5-53).

5.8.2.1 Vessel Vent System No. 1 (Ref. 5-41). The vessel vent equipment for the No. 1 system (Fig. 5-52) is composed of a steam heater (E-22-3), a high efficiency filter assembly (F-22-5), a steam or air-operated jet (J-22-4), a condenser (E-22-4), a condensate receiving tank (TK-22-1), and a recycle drain pump (PA-22-1). Vent air from the process vessels enters the heater via Header 22 where it is heated above its saturation temperature before entering the filter assembly. The F-22-5 filter assembly is a 304L stainless steel housing containing one 24-in. by 24-in. by 11 1/2-in. 60% prefilter and one HEPA filter assembly with a baffle plate 3 in. away from the filter inlet. The process vapor stream enters the filter assembly with the entrained particulates impinging upon the baffle plate, thereby reducing the velocity of the particulates and lowering the probability of the formation of holes in the filter media by entrained particles. The prefilter is designed to remove 0.1 to 50 µm particles from the process vapor stream. The HEPA filter is a Flanders 709L separator-less filter (or equivalent) and is efficiency tested to 99.95% using dioctyl phthalate (DOP) per Hanford Standard (HPS-151-M) prior to installation. Due to equipment size constraints the F-22-5 filter unit contains only one HEPA filter stage and it is insufficient to reduce the concentration of radionuclides to meet (or remain below) the effluent release limits (Ref. 5-42). The dry gases are filtered and pass to the 1,200 $ft^3$/min jet which discharges to the condenser. Condensible vapors are removed from the gas stream and the non-condensibles are discharged to the air tunnel. The condensed vapor drains into the condensate receiving tank where it is used as recirculating fluid for the Vessel Vent No. 2 ammonia scrubber tower. Excess condensate is pumped to the 216-B-12 crib.

5.8.2.2 Vessel Vent System No. 2 (Ammonia Present) (Ref. 5-43). The vessel vent equipment for the No. 2 system (Fig. 5-53) is composed of an ammonia scrubber tower (T-22-2), a condensate receiving tank (TK-22-1), a recirculating-drain pump (PA-22-1), a steam heater (E-22-7), a prefilter (F-22-6), three high efficiency filter assemblies (F-22-8-1, F-22-8-2, and F-22-9), and a steam or air operated jet (J-22-9). The condensate receiving tank and recirculating-drain pump are common to both vent systems. Contaminated gases from ammonia process vessels enter the ammonia scrubber tower via Header 146. During normal operation, the process vapors from vessels listed in Table 5-17 are vented to the (T-22-2) tower via vessel vent header 146. The ammonia vapors from the low level waste concentrator,

TABLE 5-17. Vessel Vent Systems.

| | Vessel vent no. 2 | | Vessel vent no. 1 |
|---|---|---|---|
| Header no. 146 | 69A | 69B | 22 |
| TK-5-1*, E-5-2, E-5-3 | | | TK-6-1, TK-6-2* |
| TK-17-1*, TK-17-2 | | | TK-7-1, TK-7-2 |
| TK-19-1, TK-18-3 TK-19-1 | | | TK-8-1*, TK-8-2 TK-9-1*, TK-9-2 |
| TK-19-1 | TK-25-2* | TK-38-1, TK-38-2 TK-38-3, TK-38-8 | TK-11-1*, TK-11-2 TK-12-1, G-12-2 |
| TK-20-1, E-20-2, TK-21-1, T-21-2 | TK-29-2*, TK-29-3, TK-29-4 | TK-39-1, TK-39-3 | TK-13-1*, G-13-2 TK-14-1*, TK-14-2 TK-25-1* |
| TK-22-1 | TK-30-1, TK-30-2, TK-30-3 | | TK-26-1*, TK-26-2* TK-26-3 |
| TK-23-1, E-23-3, E-23-4 | | | TK-27-2, TK-27-3* TK-27-4, T-27-1 |
| TK-24-1* | | | TK-29-1 |
| TK-34-1, TK-34-2, TK-34-3 | | | TK-31-1, TK-31-2*, TK-31-3 TK-32-1, G-32-2 |
| TK-35-1*, TK-35-2* | | | TK-33-1* |
| TK-37-2, TK-37-3* | | | TK-36-1*, TK-36-2*, TK-36-3 |
| TK-38-4, E-38-6, E-38-7 | | | TK-39-1, TK-39-4, TK-39-5 |

*Vessel Vent System is cross-connected via jumpers. Vessel Vent No. 1 drains to TK-23-1 which is on Vessel Vent No. 2.

9 3 1 2 8 9 1 9 4 5

TABLE 5-18. Normal Operating Conditions for Vessel Vent System No. 2.

| Vessel/ equipment | Temperature (°C) | Diff. press (in $H_2O$) | Steam Press (psig) | Vapor flow-rate (psig) | Cooling coil press (psig) | Liquid flowrate (gal/min.) |
|---|---|---|---|---|---|---|
| TK-22-1 | 20 - 30 | --- | --- | --- | --- | --- |
| T-22-2 | 20 - 30 | -- | --- | --- | --- | 10 - 12* |
| E-22-7 | 100 - 140** | 10 - 16 | 200 | 200 - 300 | --- | --- |
| F-22-6 | <120 | 2 - 6 | --- | 200 - 300 | --- | --- |
| F-22-8 | <100 | 0 - 2 | 0 - 5*** | 200 - 300 | --- | --- |
| J-21-2 | 170 max | --- | 75 - 100 | 20 - 40 | --- | --- |
| J-22-9 | 205 max | --- | 90 - 200 | 200 - 300 | --- | --- |
| J-35-2-6 | 165 max | --- | 65 - 90 | 15 - 30 | --- | --- |
| TK-35-2 | 10 - 30 | --- | --- | --- | 25 - 35 | --- |

*Supplied by PA-22-1.
**Vapor outlet temperature.
***When F-22-8-2 is in service the DP is actually that across the filter and the discharge line to F-22-9. The operating range is increased by 5 in. $H_2O$.

This Page Intentionally Left Blank

9 1 1 2 0 0 9 1 9 1 7

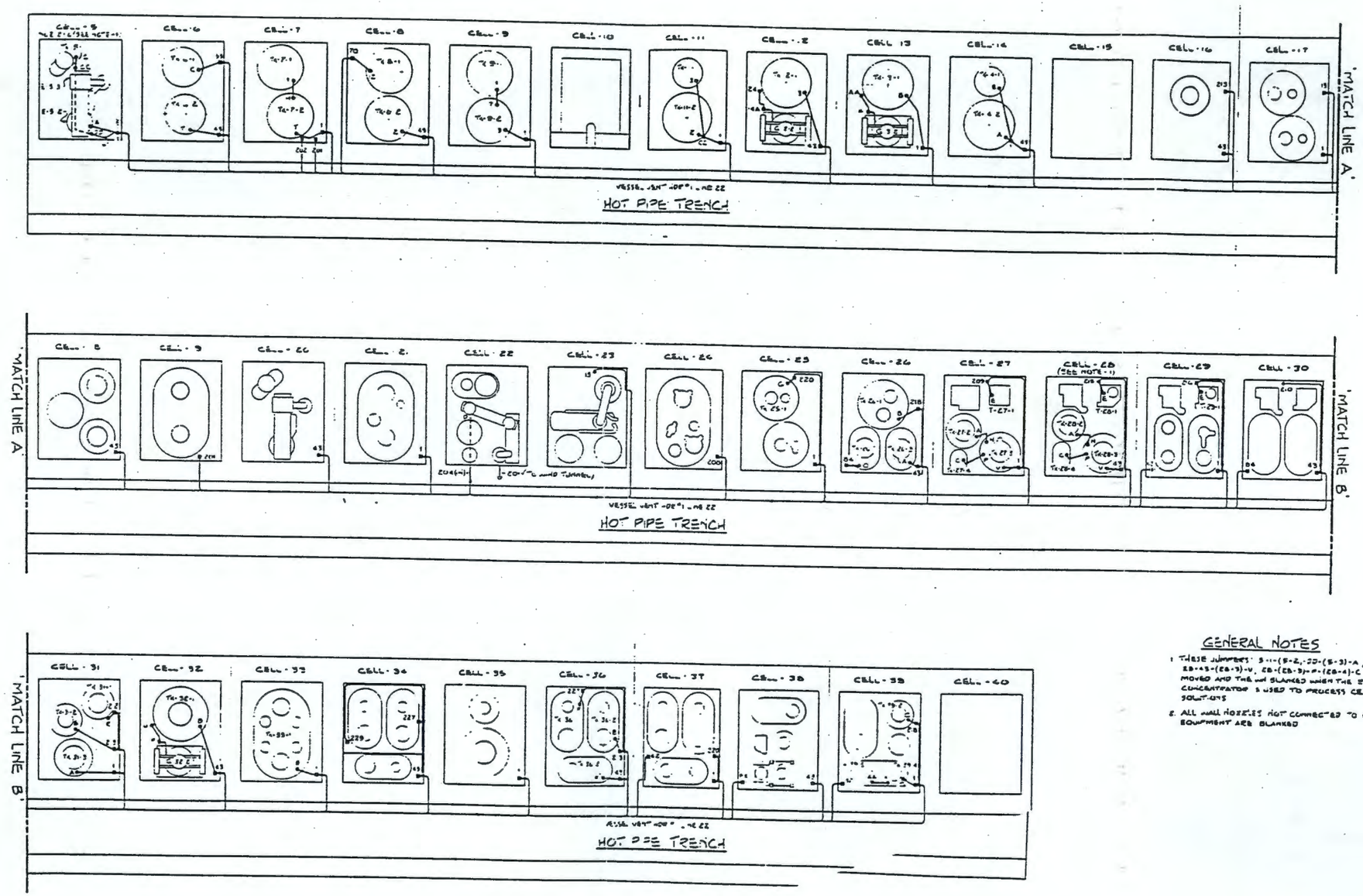


GENERAL NOTES

1. THESE JUMPERS: S-1-(E-2)-CD-(E-3)-A, S-2-G, ED-4S-(ED-3)-V, ED-(ED-3)-M-(ED-4)-C ARE REMOVED AND THE LINE BLANKED WHEN THE E-S-2 CONCENTRATOR IS USED TO PROCESS CESIUM SOLUTIONS
2. ALL WALL NOZZLES NOT CONNECTED TO CELL EQUIPMENT ARE BLANKED

FIGURE 5-52. Vessel Vent System No. 1.

THIS PAGE INTENTIONALLY
LEFT BLANK

THIS PAGE LEFT BLANK INTENTIONALLY.

9 3 1 2 8 6 6 9 1 6 4 9

THIS PAGE INTENTIONALLY
LEFT BLANK

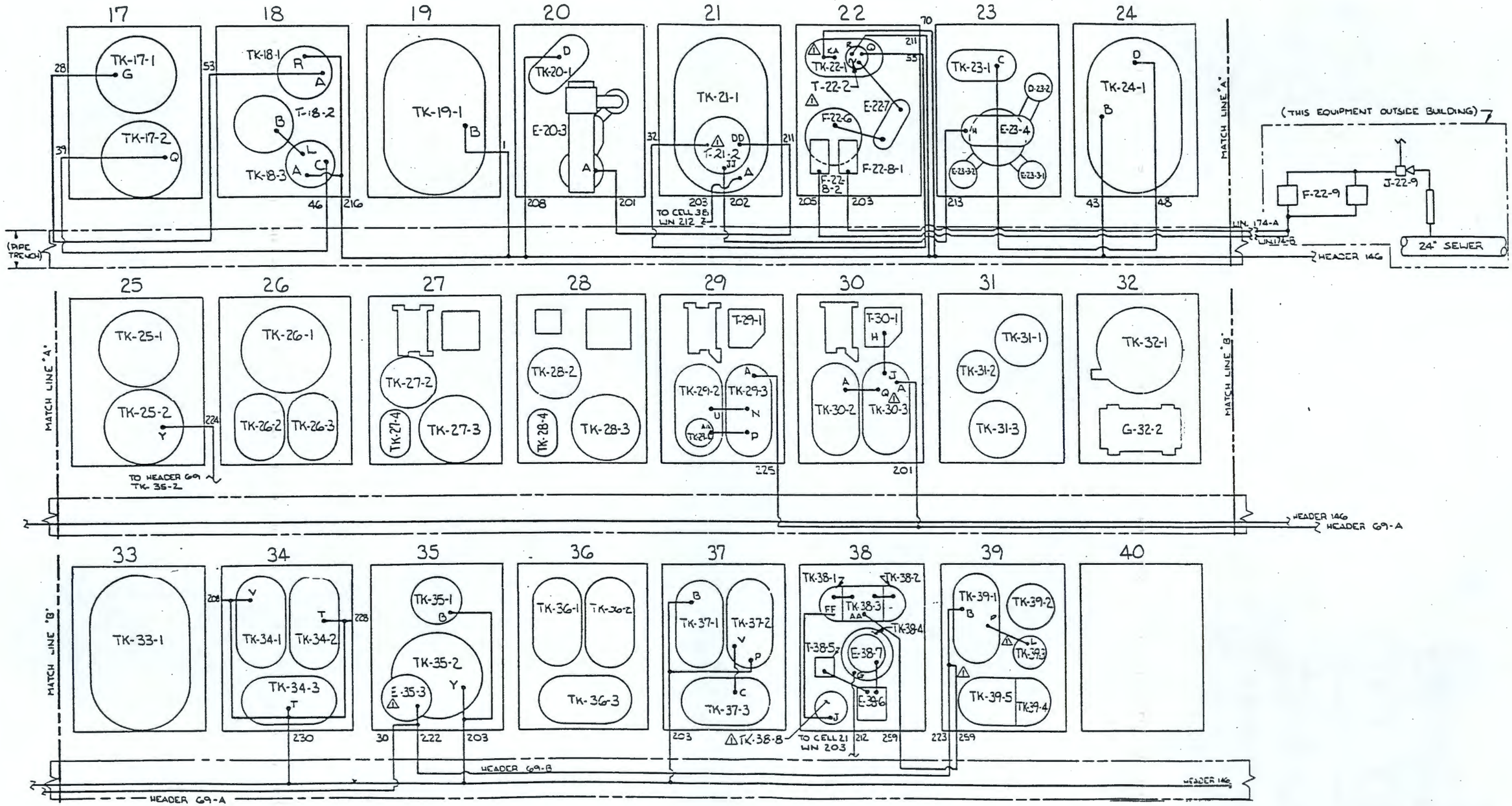


FIGURE 5-53. Vessel Vent System No. 2.

THIS PAGE INTENTIONALLY
LEFT BLANK

THIS PAGE LEFT BLANK INTENTIONALLY.

THIS PAGE INTENTIONALLY
LEFT BLANK

(E-23-3), the cesium initial purification concentrator, E-38-6, and related process vessels (E-20-3, E-23-4, E-38-7, and TK-38-4), are routed to the ammonium carbonate absorber, T-21-2. These vapor streams potentially contain larger concentrations of ammonia than the ammonia scrubber tower, T-22-2 can remove. A booster jet (J-21-2) from T-21-2 to T-22-2 maintains a vacuum in E-20-2, E-23-3 and E-38-6 by drawing the ammonia scrubbed vapors from T-21-2 to T-22-2.

A booster jet (J-35-2-6) draws the process vapors from the vessels (see Table 5-17) through the vessel vent headers 69-A and 69-B to the (E-35-3) condenser. The steam condensate and other condensibles drain to TK-35-2, while the process vapors are discharged to vessel vent header 146. The condensibles collected in tank (TK-35-2) are jetted on a batch basis to tank (TK-24-1). The Vessel Vent 2 system originally handled a nominal vapor flowrate of approximately 100 $ft^3$/min with an ammonia removal of approximately 200 lb (99%) per day. However, modifications to cesium processing resulted in an increased demand upon the Vessel Vent 2 system. A flowrate of approximately 250 to 300 $ft^3$/min, with an ammonia removal capacity of 99% is required.

The steam condensate from J-21-2 drains to TK-22-1 and is used as part of the scrub solution in T-22-2. Gases from the ammonia scrubber tower pass through the heater which raises the temperature and the gases then enter the prefilter. The F-22-6 prefilter, a multilayered filter packed with three density layers (1.5, 3.0, 9.0 lb/$ft^3$) of Owens-Corning fiberglass with a 1/2-in. mesh 304 L stainless steel screen positioned at the top and bottom of each fiberglass layer to provide packing support, removes coarse particles from the gas prior to passage through the high efficiency filters. Two parallel stages of double-banked high-efficiency separatorless filters (H-2-36136, H-2-61147) Flanders GGF, nuclear grade 7033 NL, 99.95% filtration efficiency at 1,000 $ft^3$/min (tested per ANSI N 510-1980) are used to assure adequate removal of radionuclide particles from the gas. A spare unit installed in parallel, can be placed in service by an operator who must enter the F-22-9 filter pit (external to 221-B) and switch the position of the lever of the lock handled valves in the filter lines to place the spare unit in service. The first stage HEPA filter is located in Cell 22 and the second stage high-efficiency filter is located in a pit behind the 221-B Building adjacent to Cell 22. From the filters the gases pass through a 125 $ft^3$/min jet also located in the pit behind the 221-B Building. The jet discharges to the 24 in. sewer going to the retention basins.

Table 5-18 identifies the operating parameters relevant to the system.

5.8.2.3 Instrument and Control System. The instrument controls for both the vent systems are illustrated in Figures 5-54 and 5-55 and the controls for both systems are identical except for the additional pressure switch PS-22-4-2 in the vessel vent system No. 1.

5.8.2.3.1 Operation. The correct differential pressure between the cell and the air tunnel is maintained by the 100 psig steam-motivated variable jet (J-22-4, J-22-9). The steam flow to the jet is regulated by the diaphragm-operated valve DOV-22-9-2 or DOV-22-4-2 which is controlled by the differential pressure recorder controller (DPRC-22-4, DPRC-22-9).

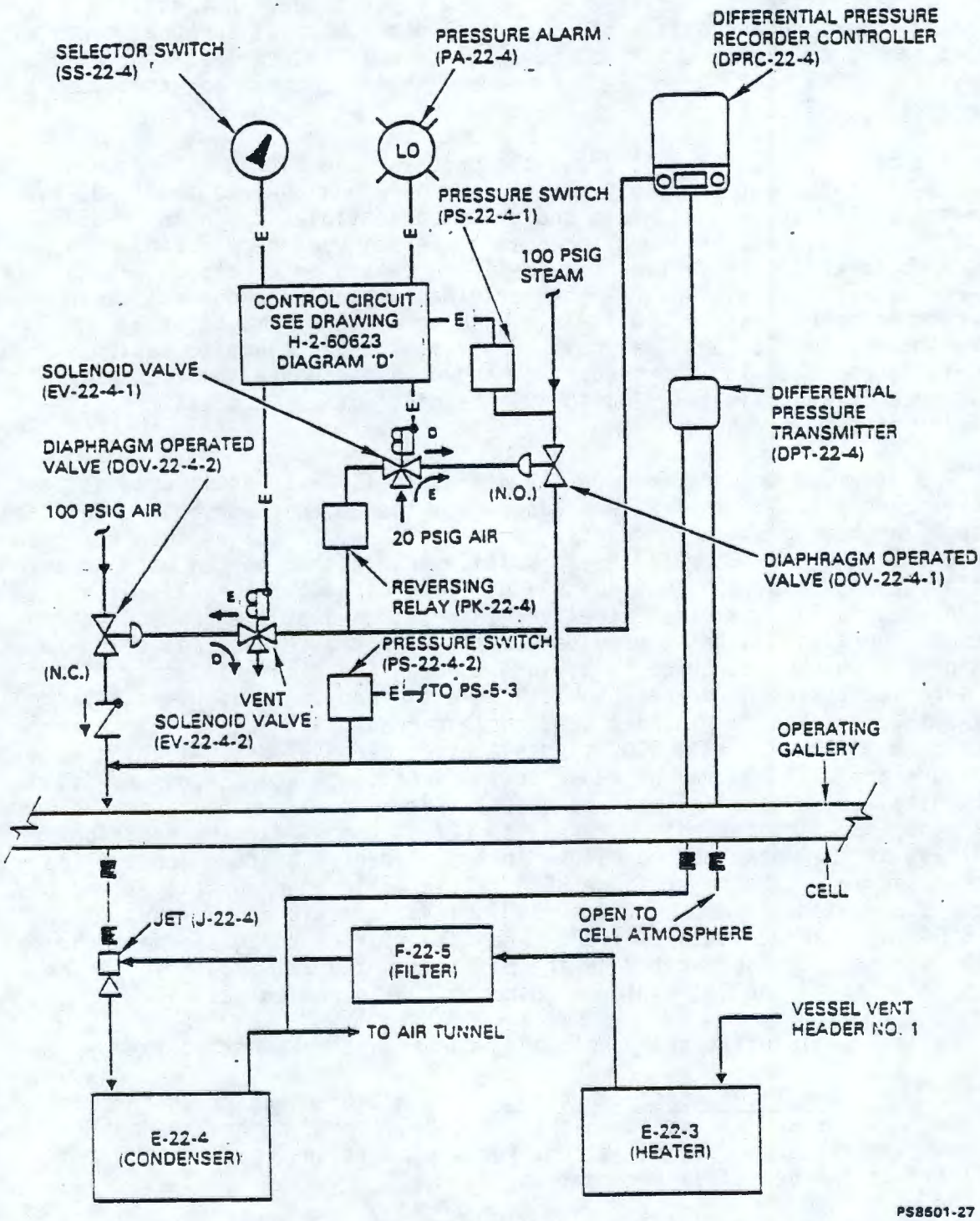


FIGURE 5-54. Instrumentation and Control for Vessel Vent No. 1.

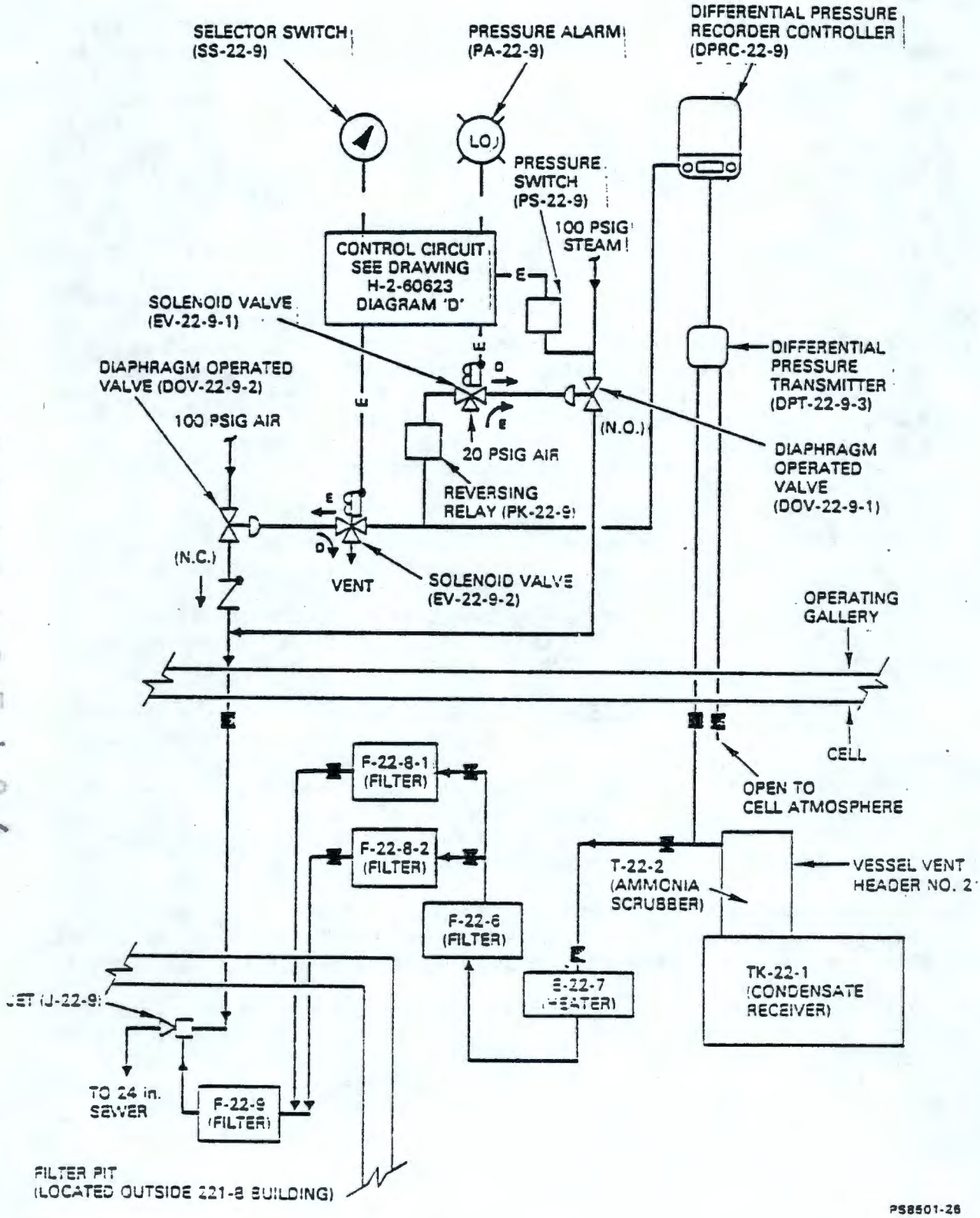


FIGURE 5-55. Instrumentation and Control for Vessel Vent No. 2.

The selector switch (SS-22-4, SS-22-9) is placed in the automatic mode to initiate a startup of the system. The solenoid valve (EV-22-4-1, EV-22-9-1) is placed in the automatic mode to initiate a startup of the system. The solenoid valve (EV-22-4-1, EV-22-9-1) is de-energized by the selector switch in the automatic position, permitting the diaphragm-operated valve (DOV-22-4-1, DOV-22-9-1) to open and throttle the 100 psig steam supply to the variable jet. The diaphragm-operated valve is controlled by the differential pressure recorder controller and operated between the set points to maintain the correct differential pressure between the process cell and the air tunnel for the desired operating conditions.

The pressure switch (PS-22-4-1, PS-22-9) contacts close at the preset trip setting in the event of loss of steam or at a low steam supply pressure. The solenoid valves (EV-22-4-1, EV-22-9-1, EV-22-4-2, EV-22-9-2) are energized initiating a closure of the diaphragm-operated valve (DOV-22-4-1) and permitting the differential pressure recorder controller (DPRC-22-4, DPRC-22-9) to automatically control the diaphragm-operated valve (DOV-22-9-2) and vary the flow of air from 100 psig air supply line to the jet (J-22-4, J-22-9). The return of the steam supply to normal pressure will return the operation of the jet to steam. The selector switch (SS-22-4, SS-22-9) in position 3 is used to motivate the jet (J-22-4, J-22-9) by air.

The pressure switch (PS-22-4-2) is permissive for the vessel vent system of Cell 5. Cell 5 vent instrument controls are inoperative until Cell 22 jet (J-22-4) is functioning. The operation of the jet (J-22-4) permits the Cell 5 vent system to function by closing the contacts of the pressure switch (PS-22-4-2). The Cell 22 vessel vent system can be shut down by placing the selector switch (SS-22-4) in the "OFF" position.

The operation of the booster jet (J-5-3), rated at 100 psig steam for 25 $ft^3$/min flow, is controlled by the diaphragm-operated valve (DOV-5-3-2). If the concentrator (E-5-2) pressure is less than 5 in. of water relative to the surrounding cell atmosphere, or the main vessel vent jet (J-22-4) is inoperative, or the motive fluid pressure to the jet (J-22-4) is less than 60 psig, the diaphragm-operated valve (DOV-5-3-2) will close and thus prevent the operation of the booster jet (J-5-3).

When the Cell 5 process vessels are used for cesium solution processing, the (J-5-3) booster jet is not operated. The steam and process air supply valves are closed and the jet discharge jumper is removed.

The process vapor stream from header 146 enters the tower via nozzle R. The scrub solution, pumped from TK-22-1, via nozzle S is countercurrently contacted with the process vapor stream from booster jet J-21-2 entering via nozzle Q. The scrubbed off-gas exits the tower via nozzle P and the scrub waste is returned to TK-22-1 via nozzle D. A thermohm probe located in nozzle U is used to monitor the off-gas temperature. The temperature recorder is located on panel 22-F.

The steam supply enters the tube bundle through nozzle B and exits to the steam condensate header through nozzle E. The offgas enters through nozzle D, passes around two baffles (not shown) and exits the heater through the discharge section to F-22-6. Differential pressure (dp) across the heater is obtained from the pressure difference at nozzle D and the discharge section. The dp jumper is connected to nozzle C and transmits to a dp gage located on panel 22-B. A thermohm probe placed in nozzle A is used to monitor the offgas temperature from the heater. The temperature recorder is located on panel 22-B.

5.8.2.4 Safety Consideration and Off-Normal Conditions (Table 5-19). The scrub solution flowrate to the T-22-2 tower must be maintained above 2 gal/min to assure adequate removal of ammonia from the process vapor stream. Allowing the liquid flowrate to drop below this level, the ammonia in the off-gas stream could combine with other off-gas components and form blockages on the F-22-8 and/or F-22-9 filters, cause increased resistance to airflow, and probable failure of F-22-8 and/or F-22-9, the filtration media. The maximum allowable dp across the F-22-8-1 filter assembly is 10 in. water and across either of the F-22-9 filter assemblies the allowable dp is 4 in. Currently, the dp across the filter assembly and the exhaust line (174-B) to the F-22-9 filter is monitored. The pressure drop across the line 174-B is 5 in. of water for a normal flowrate of 250 $ft^3$/min. The maximum allowable dp across the F-22-8 filter assembly and line 174-B is 15 in. WG.

To prevent droplets of water from reaching the F-22-5 filter unit of the No. 1 Vessel Vent System, the dew point of the process vapor stream must be sufficiently elevated to vaporize the water droplets. The E-22-3 heater is used to heat the process vapor stream to above 120°F, thereby adequately elevating the dew point of the vapor stream. Particulates transported by the process vapor stream can also damage the F-22-5 Filters. Simmering of process vessels should be kept to a minimum to decrease the generation of water vapor and particulates. All storage vessels are routinely maintained below 35°C to minimize particulate loading upon the F-22-5 Filters. The dew point of the process vapor stream in the No. 2 Vessel Vent System must be sufficiently elevated by the E-22-7 Heater to prevent moisture damage to these filters. At filter failure, backup units can be placed in service.

Blockages in the vessel vent headers (146 and 69) can cause pressurization of vessels thereby increasing the spread of radioactive contaminants to the cells and canyon atmosphere. To prevent vessel pressurization, the (146 and 69) headers are periodically drained of condensate and flushed. Also, administrative controls are maintained on the jets (J-21-2, J-22-9, and J-35-2-6) to assure that adequate vacuum is maintained in process vessels. Whenever any of the three concentrators (E-20-2, E-23-3 or E-38-6) are operating, the steam supply to the jet (J-21-2) on the panel (24-A) is set at least at 70 psig. Lower jet pressures result in reduced vapor flowrates and possible pressurization of the concentrators (E-30-2, E-23-3, and E-38-6). The steam pressure of

TABLE 5-19. Off-Normal Conditions for Vessel Vent Systems 1 and 2. (Sheet 1 of 6)

| Off standard condition | Potential cause | Suggested corrective action |
|---|---|---|
| 1. Loss of vaccuum or low vacuum in process vessels. | 1.a. Vessel Vent 1 header-vacuum low. | 1.a. Adjust DPRC-22-4 setpoint to increase vacuum. |
| | b. Interruption of process air or steam supply to J-22-4 jet. | b. If J-22-4 is operating on steam switch J-22-4 to air. Shut down E-5-2 until vessel vent vacuum is restored. Investigate to determine source of steam/air interruption. |
| | c. Accumulation of condensate within Header 22 or vessel vent line(s). | c. Shut down Vessel Vent 1 system. Drain/flush header and vent lines. |
| | d. Leak(s) in vessel vent line(s) or vessel(s). | d. Isolate leaking lines/vessels. |
| | e. Cross-tie between vessels which are vented to Vessel Vent 2 system (Table 5-11). | e. Check vessels with connections to vessels which are vented to Vessel Vent 2 system. Place a water seal as required in these vessels. |
| | f. DPRC-22-4 malfunctioning | f. Contact an instrument mechanic to repair the instrument. |
| | g. Differential pressure gage is malfunctioning. | g. Refer to 1.f. |
| 2. Differential pressure across F-22-5 prefilter or HEPA exceeds 4 in. of water. | 2.a. Vessel Vent 1 header 22 vacuum is set too high. Check other the d.p. gages. | 2.a. Adjust DPRC-22-4 setpoint to lower header 22 vacuum to prevent filter breeching. |
| | b. F-22-5 filter(s) is plugging. | b. See 2.a. Shut down E-5-2 concentrator to reduce load on vessel vent system. |
| | c. Differential pressure jumper or related equipment is malfunctioning. | c. Refer to 1.f. |

TABLE 5-19. Off-Normal Conditions for Vessel Vent Systems 1 and 2. (Sheet 2 of 6)

| Off standard condition | Potential cause | Suggested corrective action |
|---|---|---|
| 3. Differential pressure across E-22-3 heater exceeds 8 in. of water. | 3.a. Refer to 2.a. | 3.a. Refer to 2.a. |
| | b. Refer to 2.c. | b. Refer to 1.f. |
| | c. Restriction in E-22-3 heater or associated jumpers. | c. Shut down the Vessel Vent 1 system. Drain and flush the heater. |
| | d. Steam leak from heater tube bundle into the vapor stream. | d. Immediately shut down the off the steam to the heater. Institute repairs to system. |
| 4. Loss of vacuum or low vacuum in E-5-2 concentrator or TK-5-1. | 4.a. Malfunction of J-5-3 jet. | 4.a. Check the steam supply to J-5-3 jet. Verify that supply steam pressure is at least 80 psig. Investigate in Cell 5. |
| | b. Loss of steam or air supply to J-22-4 jet. | b. Because of the interlocking control systems, J-5-3 will shut down automatically whenever steam/air pressure to J-22-4 decreases below 60 psig. Shut down E-5-2 concentrator until steam/air supply to J-22-4 is restored. |
| | c. Restriction in the vent line from TK-5-1, E-5-2, or E-5-3. | c. Shut down E-5-2 concentrator. Flush/drain vent line(s) or header 22. |
| | d. Refer to 1.a. | d. Refer to 1.a. |
| | e. Refer to 1.d. | e. Refer to 1.d. |
| | f. Refer to 1.g. | f. Refer to 1.g. |

TABLE 5-19. Off-Normal Conditions for Vessel Vent Systems 1 and 2. (Sheet 3 of 6)

| Off standard condition | Potential cause | Suggested corrective action |
|---|---|---|
| 5. Loss of steam supply to E-22-3 heater. | 5.a. Leak in steam supply line to E-22-3 heater. | 5.a. Check temperature of vapors exiting exiting heater (TRC-22-3). If vapor temperature is below 120°C, immediately shut down Vessel Vent 1 system. Attempt to isolate steam leak(s) and repair as soon as soon as possible. |
| | b. Steam outage. | b. Shut down the Vessel Vent system No. 1. Contact powerhouse to verify steam outage. |
| 6. Decrease in pressure of raw water which is supplied to E-22-4 condenser. | 6.a. Leak in raw water supply to E-22-4 condenser. | 6.a. Check temperature of vapors exiting condenser (TRC-22-3). Immediately switch the J-22-4 jet to air operation. Valve out raw water supply to condenser if necessary. |
| | b. Raw water leak from condenser tube bundle into vapor stream is suspected. | b. Refer to 6.a. |
| | c. Interruption of raw water supplied from powerhouse. | c. Refer to 6.a. Contact powerhouse to verify interruption of raw water supply. Also verify that emergency well pumps have activated (SOP BO-001-003). |
| 7. Loss of vacuum or low vacuum in vessels E-20-2, E-20-3, E-23-3, E-23-4, E-38-6, E-38-7, or TK-38-4. | 7.a. Feed rate to concentrator(s) is too high. | 7.a. Reduce feed flowrate to appropriate concentrator(s). |
| | b. Steam supply rate to concencentrator(s) is too high causing increased vapor generation. | b. Reduce steam supply rate to appropriate concentrator(s). If necessary, shut down and restart concentrator(s). |
| | c. Cooling water flowrate to condenser(s) is too low resulting in incomplete condensation of condensables. | c. Increase cooling water flowrate to appropriate condenser(s). |

TABLE 5-19. Off-Normal Conditions for Vessel Vent Systems 1 and 2. (Sheet 4 of 6)

| Off standard condition | Potential cause | Suggested corrective action |
|---|---|---|
| | d. The steam flowrate to J-21-2 (panel 20-D is too low). | d. Check the steam pressure to Increase the steam pressure but do not exceed the jet jet design pressure of 150 psig. |
| | e. Accumulation of condensate or a pluggage in the vessel vent line(s). | e. Drain and flush the vent line(s). |
| | f. Leak in the vessel vent line(s) or a pluggage in the vessel vent line(s). | f. Isolate leaking line or vessel. |
| | g. Unidentifiable. | g. Shut down concentrators. Restart E-23-3 if low level waste must be processed. |
| | h. Seal pot water in concentrator(s) is low. | h. Fill seal pot(s) with water to 24 ± 2 weight factor. |
| 8. Loss of vacuum or low vacuum in vessels serviced by header 69-A or 69-B. | 8.a. The steam flowrate to J-35-2-6 (panel 35-E) is too low. | 8.a. Check the steam pressure to J-35-2-6. Increase the steam pressure but do not exceed the jet design pressure of 150 psig. |
| 9. Loss of vacuum or low vacuum in vessels serviced by header 146. | 9.a. Malfunction of discharge jet J-22-9. | 9.a. Inspect J-22-9 (located in F-22-9 filter pit). Attempt to repair jet. |
| | b. Accumulation of condensate or a pluggage in the vessel vent line(s). | b. Drain and flush vent line(s). |
| | c. Leak in the vessel vent line(s) or vessel(s). | c. Isolate leaking line or vessel. |
| | d. Hydrogen gas explosion in the vapor space of a vessel. | d. Check vessels serviced by header 146 to determine if an explosion has occurred. Refer to SOP 80-001-021. |

TABLE 5-19. Off-Normal Conditions for Vessel Vent Systems 1 and 2. (Sheet 5 of 6)

| Off standard condition | Potential cause | Suggested corrective action |
|---|---|---|
| 10. Loss of scrub solution circulation through T-22-2. | 10.a. Flowrate of scrub solution to TK-24-1 too high. | 10.a. Adjust WFC-22-1 (panel 20-C) to reduce the rate of scrub solution disposal to TK-24-1. Adjust FRC-22-1 to increase circulation rate to T-22-2. |
| | b. PA-22-1 pump failure. | b. Check PA-22-1 (panel 20-C) to determine if it is pulling amps. Attempt to restart pump. If this fails, check the continuity across the leads of pump signal transmitter to determine if the pump has failed. If so, replace pump. |
| | c. Blockage in circulation line(s). | c. Check PA-22-1 (panel 20-C) to determine if it is pulling excessive (greater than 5) amps. If so, shut down the pump and fill TK-22-1 with demineralized water. Also circulation lines to soak and then restart the pump. |
| 11. DP across F-22-6 exceeds 6 in. $H_2O$. | 11.a. Vessel Vent No. 2 flowrate is in excess of 300 $ft^3$/min. | 11.a. Reduce the steam supply to the discharge jet J-22-9 (panel 22-C, DPRC-22-9). |
| | b. The filter is plugged. | b. Shut down Vessel Vent No. 2 system. Flush F-22-6 with demineralized water. |
| | c. DP jumper malfunction. | c. Check continuity across the leads of the DP signal transmitter. If continuity is not present, replace DP jumper, |
| 12.a. DP across F-22-8-1 exceeds 10 in. $H_2O$. | 12.a. Vessel Vent No. 2 flowrate is in excess of 300 $ft^3$/min. | 12.a. Reduce the steam supply to the discharge jet J-22-9 (panel 22-C DPRC-22-9). |

TABLE 5-19. Off-Normal Conditions for Vessel Vent Systems 1 and 2. (Sheet 6 of 6)

| Off standard condition | Potential cause | Suggested corrective action |
|---|---|---|
| b. DP across F-22-8-2 exceeds 15 in. $H_2O$. | b. The filter is plugged. | b. Enter the F-22-9 filter pit and and switch over to the spare unit. |
| c. DP across F-22-2 exceeds 4 in. $H_2O$. | c. DP jumper malfunction. | c. Check continuity across the leads of of the DP signal transmitter. If continuity is not present, replace DP jumper. |
| 13.a High radiation alarm on F-22-9 filter (dispatcher's office panel 4). | 13.a. Accumulation of fission products on F-22-9 filter. | 13.a. Dispatch RM to investigate. Pull filter paper on sampler 678 (Vessel Vent No. 2 air sampler) and send to lab. Monitor Vessel Vent No. 2 activity and switch to standby filter if deemed necessary. |
| b. High activity report by lab on Vessel Vent No. 2 sampler 678. | | |
| 14. Inaccurate Vessel Vent No. 2 flowrate (panel 22-C, DPRC-22-9). | 14. Pitot tube is plugged. | 14. Dispatch instrument mechanic to F-22-9 filter pit to flush pitot tube. |
| 15. Temperature of Vessel Vent 2 vapor discharge to 24 in. is in excess of 40°C (temperature probe located next to F-22-9 filter pit). | 15. Inadequate condensation of condensables. | 15. Enter F-22-9 filter pit and increase raw water flowrate by adjusting rotometer. |
| 16. Temperature of vapor stream entering F-22-9 filter is below 40°C (temperature probe located atop F-22-9 filter pit). | 16. E-22-7 heater failure or reduction of steam flowrate to E-22-7. | 16. Attempt to restore steam supply to E-22-7 or repair heater. Shut down Vessel Vent No. 2 if temperature drops below 30°C. |
| 17. Temperature of off gas stream from T-22-2 in excess of 35°C (panel 22-F). | 17. Scrub solution circulation rate to T-22-2 is too low. | 17. Increase flowrate to T-22-2 by adjusting FRC-22-1 and WFC-22-1 (panel 20-C). |

150 psig will cause the jet to fail. To ensure adequate vacuum in vessels serviced by vessel vent headers (69-A and 69-B), the (J-35-2-6) jet panel (35-3) working fluid pressure is maintained at a minimum of 20 psig. Also, the cooling water pressure to the cask waste receiver tank (TK-35-2) cooling coil on the panel (35-D) is set at a minimum of 20 psig to condense the condensibles in the vapor stream.

An air sampler (code B678) continuously draws a 1 $ft^3$/min sample of the process vapors discharged into the 24 in. sewer. The radionuclides in the sample stream are collected upon filter paper and analyzed weekly for total beta and alpha emitters. Also, a NaI crystal/photomultiplier-tube assembly, is suspended in the process vapor stream, transmits a signal to a picoammeter and signal booster located in the 221-BB Building; from there the signal is transmitted to an ammeter on panel 5 in the dispatcher's office. When the set point on the ammeter is exceeded, an alarm and indicator light are activated.

A Beckman HM Radiation Detection Chamber is placed adjacent to each F-22-9 Filter Assembly and transmits the sensed radionuclide decay energy to a picoammeter connected to a four-point chart recorder with a conversion chart to determine the radiation field (mR/h) at the chambers. The recorder is located on panel 4 in the dispatcher's office. The leads are switched at the junction box in the F-22-9 Filter Pit to activate the radiation detection chamber of the filter in use. A warning light, entitled "22-9 High Radiation" and an alarm will both be activated if the radiation field at the Beckman HM detector exceeds 80% of the preset picoammeter scale.

## 5.9 AUXILIARY STRUCTURES

### 5.9.1 221-BC Building R-13 (SWP Changeroom, Canyon Entrance and the Dumbwaiter)

The building is a single-story changeroom built on a concrete slab 30 ft 7 3/4-in. by 24-ft 8-in. and attached to the south end of Section 7 of the 221-B Building (Fig. 5-56). The walls are constructed of standard concrete blocks, reinforced with steel bars and the core filled with concrete. The roof is a built-up metal deck.

5.9.1.1 221-BC SWP Change Room. The primary function of R-13 dumbwaiter is to transport sampling equipment in and out of the canyon in order to eliminate the hazards of manually handling this material up and down the stairs. The dumbwaiter is also used to move waste cartons, impact wrenches, and bags of trisodium phosphate for cleaning the deck.

An airlock between the access door to the canyon and R-13 encloses the stairway and the landing area in front of the upper dumbwaiter hoistway access door. The airlock doors at the bottom of the stairs are locked and controlled from the dispatcher's office. Both doors are normally kept closed and the doors are opened one at a time when in use. The areas within

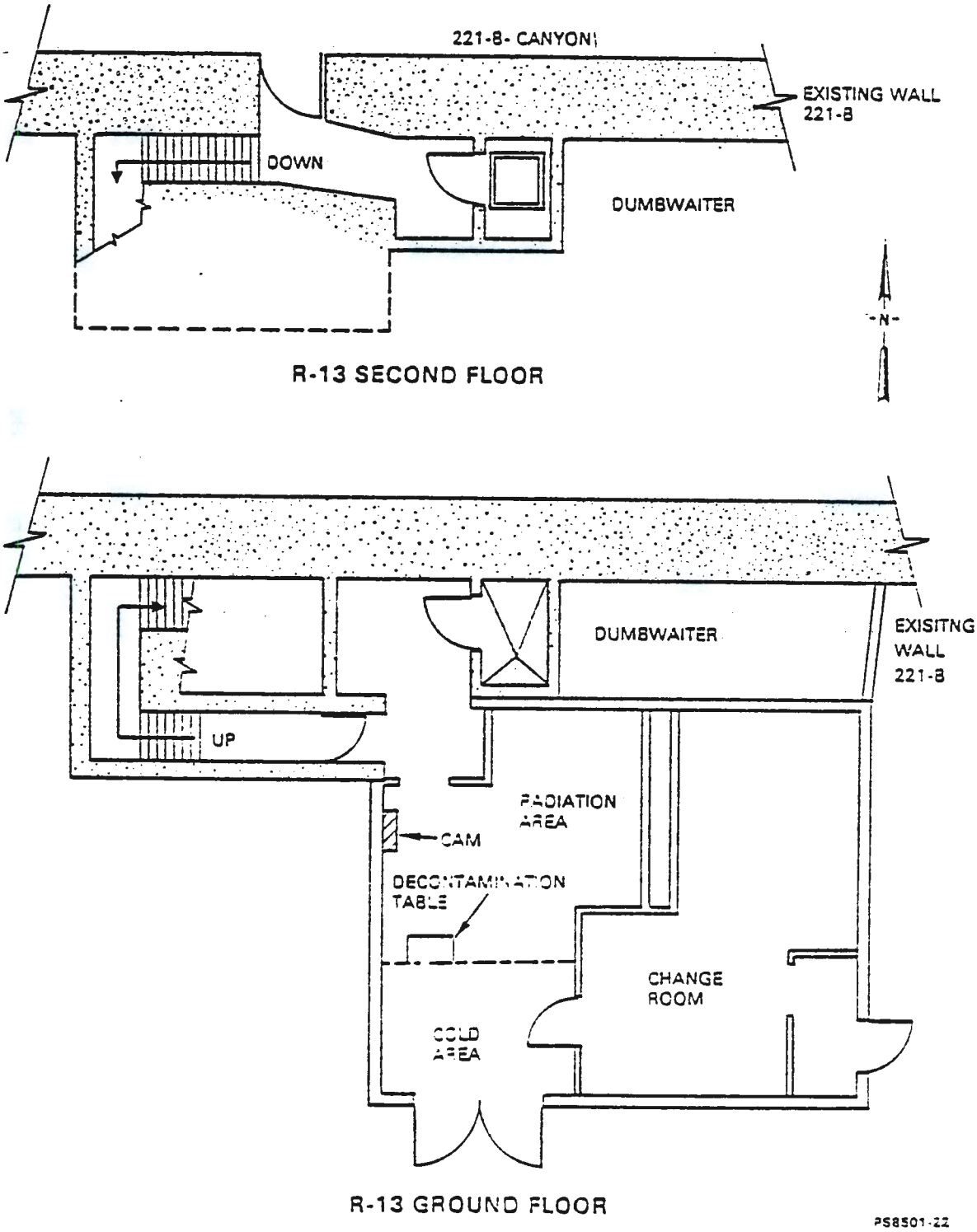


FIGURE 5-56. The 221-BC Building.

the airlock, the landing in front of the dumbwaiter on the first floor, leading to the south double doors and enclosing the sinks, are radiation zones. The floor of this entire area is painted yellow. A chain barricade, with an opening for a step-off mat exit, is maintained for separating the radiation zone and the non-radiation area of R-13. When performing maintenance on the dumbwaiter, the electrical switchgear is locked and tagged in the standard manner.

The dumbwaiter is a freight-hauling car with an opening 3 ft wide and 4 ft high. The maximum working load capacity on the car is 500 lb. With an allowance of 40 lb for the sample cart, which will permit 14 of the 32 lb sample transport containers (doorstops) or four of the B Plant bulk sample pigs; if there is a mixture of pigs, the maximum number of doorstops is reduced by three for each bulk sampling pig. A cart is provided for the dumbwaiter car as well as for use in transporting sampling equipment, doorstops, and pigs to and from the dumbwaiter car.

The hoistway is provided with a dumbwaiter doorway at both floors and an access doorway to the machinery space; the hoistway doors are electrically interlocked to prevent opening when car is in motion or not properly positioned at a landing.

The dumbwaiter doors remain locked when the access door to machinery space is open. All three doors have keyed-alike mechanical locks and the keys for the hoistway doors at the landing levels are kept in the lock at all times unless authorized otherwise by supervision, because the keys are necessary for opening the doors.

The car on the open side is equipped with a slide-up safety gate with a safety switch which prevents the operation of the dumbwaiter if the gate is not fully closed. Limit switches are maintained to stop the car in a position suitable for opening and closing the doors and for loading and unloading the car. Adjacent to both pushbutton stations is the key for operating the "run-by" switch. The run-by switch bypasses the interlock and runs the car past the normal landing position permitting access for maintenance. The keys are never left in the run-by switch but kept by maintenance while one key is retained on a ring in the shift supervisor's office. Authorization is required for operation of the run-by switch.

A "Door Open Call" buzzer sounds automatically when a pushbutton is pressed and a dumbwaiter door or car gate is open. A car arrival light and a single stroke bell is activated upon the arrival of the car at the level. The light remains lighted until the door is opened. A red pilot light marked "In Use" on both pushbutton stations is illuminated during the transit of a car or when the dumbwaiter door and/or car gate is open. A green pilot light on both pushbutton stations illuminates indicating the presence of a car.

9 3 1 2 8 9 1 6 6 5

5.9.1.2 Ventilation (K1) System (Fig. 5-57, Table 5-20). K1-System Sequence of Operation (Fig. 5-54, Table 5-16). The system is started by moving the manual switch (MS-1-1) from "OFF" to the "START" position until the system operation is stabilized, then closing the pressure switch (PS-1-1) interlocks, the manual switch (MS-1-1) is moved to the "RUN" position. With the manual switch (MS-1-1) in either the "START" OR the "RUN" position, the power roof-ventilator (K1-6-1), the non-overloading centrifugal fan (K1-5-1) and the evaporative cooler recirculation pump (K1-4-1) are energized. The flow damper is opened by the flow damper motor (FDM-2-1) in response to the pressure transmitter (PX-1-1). A drop in the duct static pressure will open electrical interlocks on the pressure switch (PS-1-1), initiating a shutdown of the entire supply system while the power roof ventilator (K1-6-1) remains in operation. Temperature control element (TC-1-1) senses and maintains a maximum duct air temperature of 62°F dry bulb through the operation of the temperature switch (TS-1-1), the electric relay (K1-1-1) and the preheat coil (K1-2-1). The room temperature control element (TC-2-1) senses and through the operation of the main switch (TS-1-2), the electric relay (K1-1-2) and the reheat coil (K1-3-1) maintains the desired room temperature. The preheat and the reheat coils are protected by thermal overload.

9 3 1 2 8 9 1 9 6 6

5.9.2 221-BB Condensate Building

The building is located immediately south of the 221-B Building and directly above a vault which provides housing for two 400-gal BCS and BCP tanks. Instruments for sampling and monitoring the BCP and BCS stream from the process are located in the building above. The building is a radiation zone and provisions of General Regulations and Practices for Radiation Work are reviewed and followed prior to building entry.

5.9.2.1 Structure. The building is a prefabricated clear-span shed-roof metal structure designed and constructed to be weather tight. The basic stability is obtained from the wall and roof combining to form the structural support and cover in one unit. The structure is fixed to the reinforced concrete vault with anchor bolts and is insulated and designed for a wind load of 15 $lb/ft^2$ and roof live load of 20 $lb/ft^2$. The concrete vault is situated below grade beneath the structure.

5.9.2.2 Ventilation (Fig. 5-58). Air from the vault containing the steam (BCS) and process (BCP) condensate tanks is exhausted via the 221-BB Building through a single stage high efficiency particulate air (HEPA) filter, exhauster, and stack. The stack air is sampled continuously.

5.9.3 221-BF Effluent Control Building

The facility provides interim storage of process condensate in the two 13,000 gal tanks located below grade for sampling before disposal to the cribs. The building has a construction classification of "fire resistive" and "unprotected non-combustible" and an occupancy classification of special purpose industrial.

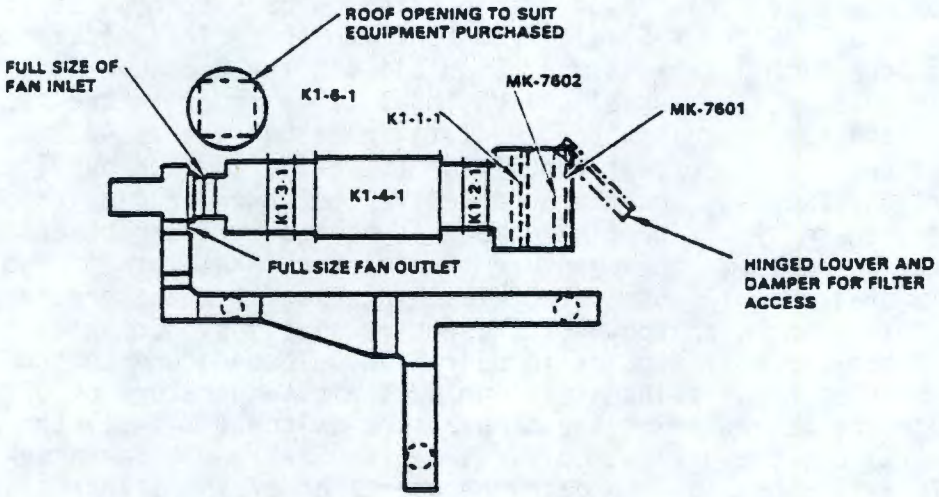


ROOF PLAN

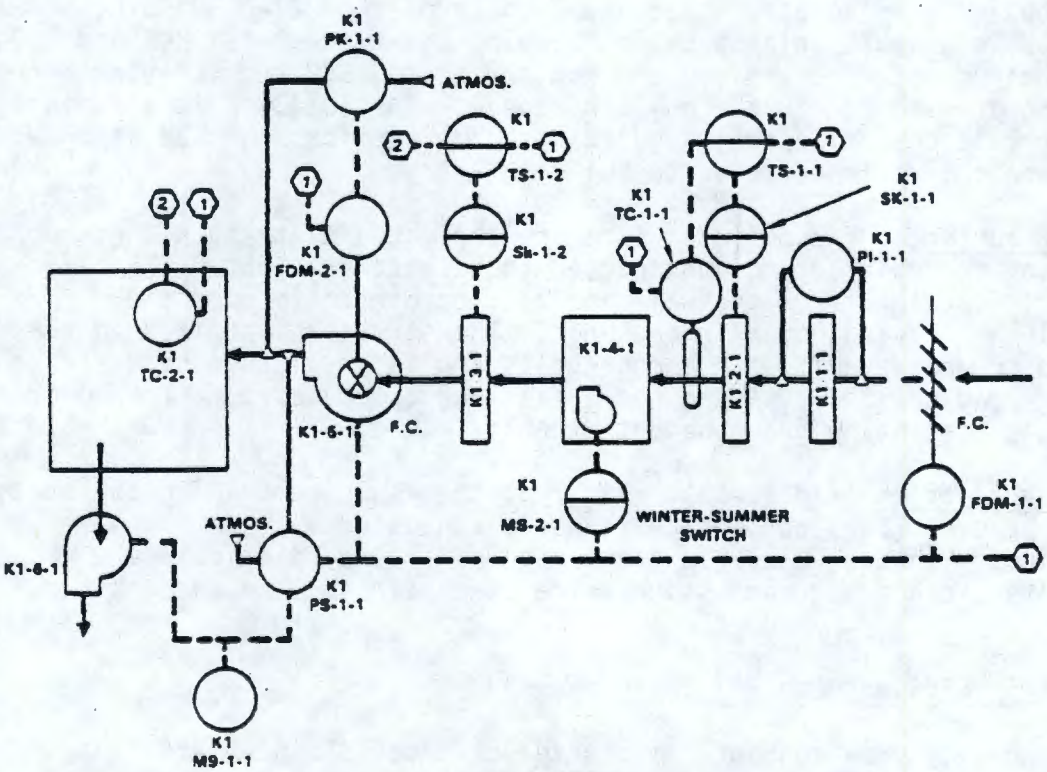


K1 SYSTEM

PS8604-62

FIGURE 5-57. The 221-BC Ventilation (K1) System.

TABLE 5-20. Ventilation Information for 221-BC.

NONOVERLOADING CENTRIFUGAL FAN

| Equipment no | cfm | Air temp (°F) | Sp. in WG | Max OV FPM | Mech. eff. % min. | Class | Discharge | Rotation | Arrangement | Type | Motor | | | | | Accessories |
|---|---|---|---|---|---|---|---|---|---|---|---|---|---|---|---|---|
| | | | | | | | | | | | HP | RPM | Volt | Cycle | Phase | |
| KI-5-1 | 4,100 | 70 | 2 1/4 | 1,800 | 75 | I | TH | CW | 9 | SWSI | 5 | 1,725 | 480 | 60 | 3 | Radial damper and vibration base |

POWER ROOF VENTILATOR

| Equipment no. | cfm | Sp. in WG | Motor | | | | Min. whl. dia. (in.) | Max. RPM | Drive |
|---|---|---|---|---|---|---|---|---|---|
| | | | HP | Volts | Cycle | Phase | | | |
| KI-6-1 | 3,700 | 0 | 1/3 | 120 | 60 | 1 | 22 | 600 | Belt |

EVAPORATIVE COOLER

| Equipment no | cfm | Ent. air | | Max. air res. in WG | Spt. eff. | Cell arrangement | | | | Class | Pump motor | | | | | | |
|---|---|---|---|---|---|---|---|---|---|---|---|---|---|---|---|---|---|
| | | °F, DB | °F, WB | | | WD | Size | High | Wide | | GPM | Head | HP | RPM | Volt | Cycle | Phase |
| KI-4-1 | 4 100 | 103 | 67 | 0 5 | 90% | 4 | 20x20x8 | 2 • | 2 | I | Belt | 4 | 4 | 1,750 | 430 | 430 | 430 |

ELECTRIC PREHEAT AND REHEAT COILS

| Equipment no | cfm | Total watts | Btuh | No. of circuits | Htr width (in.) | Htr height (in.) | Max. air res in WG | Volts | Cycle | Phase |
|---|---|---|---|---|---|---|---|---|---|---|
| KI 2-1 | 4 100 | 93,500 | 318,000 | 4 | 36 | 30 | 0.04 | 480 | 60 | 3 |
| KI-3-1 | 4 100 | 39,000 | 132,800 | 2 | 40 | 30 | 0 04 | 480 | 60 | 3 |

LOUVER SCHEDULE

| Mark no | Width (in.) | Height (in.) | Minimum free area ($ft^2$) |
|---|---|---|---|
| MK-7601 | 4.100 | 4 100 | 9 |

TABLE 5-20. Ventilation Information for 221-BC (cont.).

DAMPER SCHEDULE

| Mark no. | cfm | Width (in.) | Height (in.) | Minimum free area ($ft^2$) |
|---|---|---|---|---|
| MK-7602 | 4,100 | 48 | 48 | Multiblade |

DIFFUSER SCHEDULE

| Mark no. | cfm | Neck dia. (in.) | Approved outside dia. (in.) | Mounting height |
|---|---|---|---|---|
| MK-7603 | 1,500 | 16 | 48 | 8 ft 10 in. |
| MK-7604 | 1,100 | 12 | 28 | 8 ft 10 in. |

FILTERS

| Equipment no. | Design cfm | Size (in.) | Max. face vel FPM | Initial res. in WG | Test and rating | Arrangement | | |
|---|---|---|---|---|---|---|---|---|
| | | | | | | High | Wide | |
| K1-1-1 | 1,500 | | 265 | 0.028 | | | | |

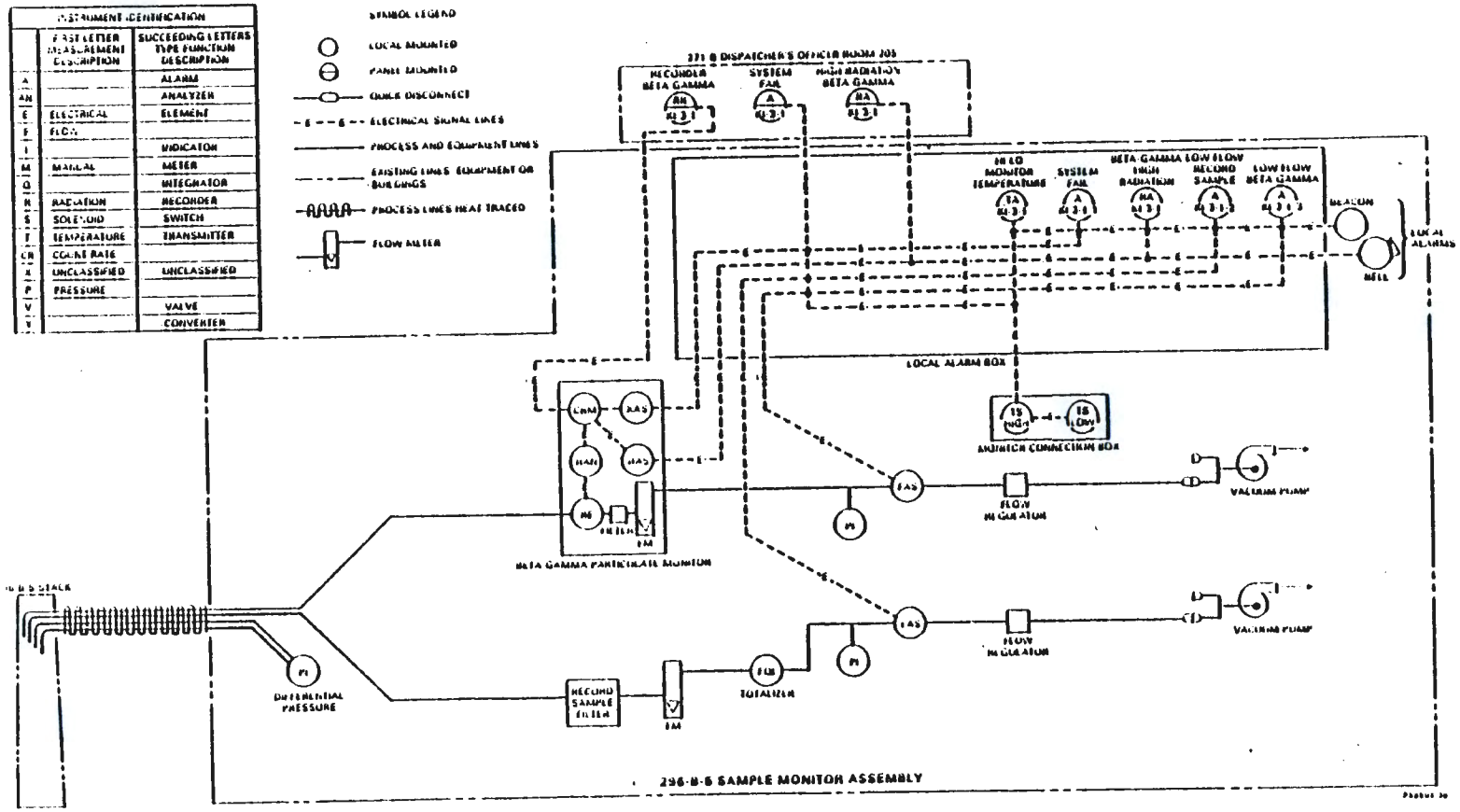


FIGURE 5-58. The 221-BB Building Ventilation System.

5.9.3.1 Structure. The prefabricated, galvanized, weather-tight, single-span, self-framing-type structure encloses the stairwell to a below grade single reinforced concrete structure covering an area of 960 $ft^2$. The basic stability is obtained from the wall and the roof panels which combine both the structural support and cover in one unit. The walls and roof panels are 24 gage zinc coated flute and flush steel panels respectively. The structure has been designed for a dead load and a wind load of 20 $lb/ft^2$.

5.9.3.2 Ventilation (Fig. 5-59 and 5-60). A negative atmosphere to 221-BF Building pressure differential is maintained by the exhaust fans. Approximately 560 $ft^3$/min of ambient air flows across a heating coil, through a 36% NBS filter and backdraft dampers into the sample and monitor rooms. The air from the monitor room, sampler boxes, batch tanks, and the effluent control pit flow through common exhaust duct with a heating coil, two HEPA filters, and opposed blade manual dampers. A pressure (sample room to effluent control) differential allows a flow of 260 to 450 $ft^3$/min across a HEPA filter. The exhaust flow is recorded and effluents sampled before being released to the atmosphere.

Operation of the exhaust fan by pushing the start button energizes the control circuit of the heating coil located upstream of the HEPA filters. The controller senses the temperature downstream of the heating coil and operates the heating coil to maintain an exhaust temperature of 155°F. The inlet air temperature controller senses the ambient air and energizes the heating coils to maintain a minimum temperature of 35°F. An opposed blade damper at the inlet to the exhaust fan is manually regulated to maintain flow at the desired value. Butterfly valves at the outlet of sample boxes A and B are adjusted to maintain a -0.10 in. WG in the boxes and a 0.25 in. WG velocity pressure reading on the pressure indicators at the outlet with the door closed and open respectively. The pressure differential ensures 30 $ft^3$/min infiltration with door closed and 190 $ft^3$/min across the opening with doors open.

Temperature indicators monitor the temperature of the air entering and leaving the exhaust air heating coils. Differential pressure indicators measure pressure drop across filters and the pressure indicators provide readings on the sample boxes.

### 5.9.4 282-B and 282-BA Emergency Well Pump Houses

The diesel driven emergency well pumps are located in these buildings. Buildings 282-B and 282-BA contain pumps of capacities 200 gal/min and 800 gal/min respectively. These buildings have a construction classification of "unprotected non-combustible." The buildings are equipped with smoke detectors having a direct alarm to the Hanford Fire Department and also have portable fire extinguishers. The nearest fire hydrant is located 85 ft east of the building. The buildings have an occupancy classification of "special purpose material."

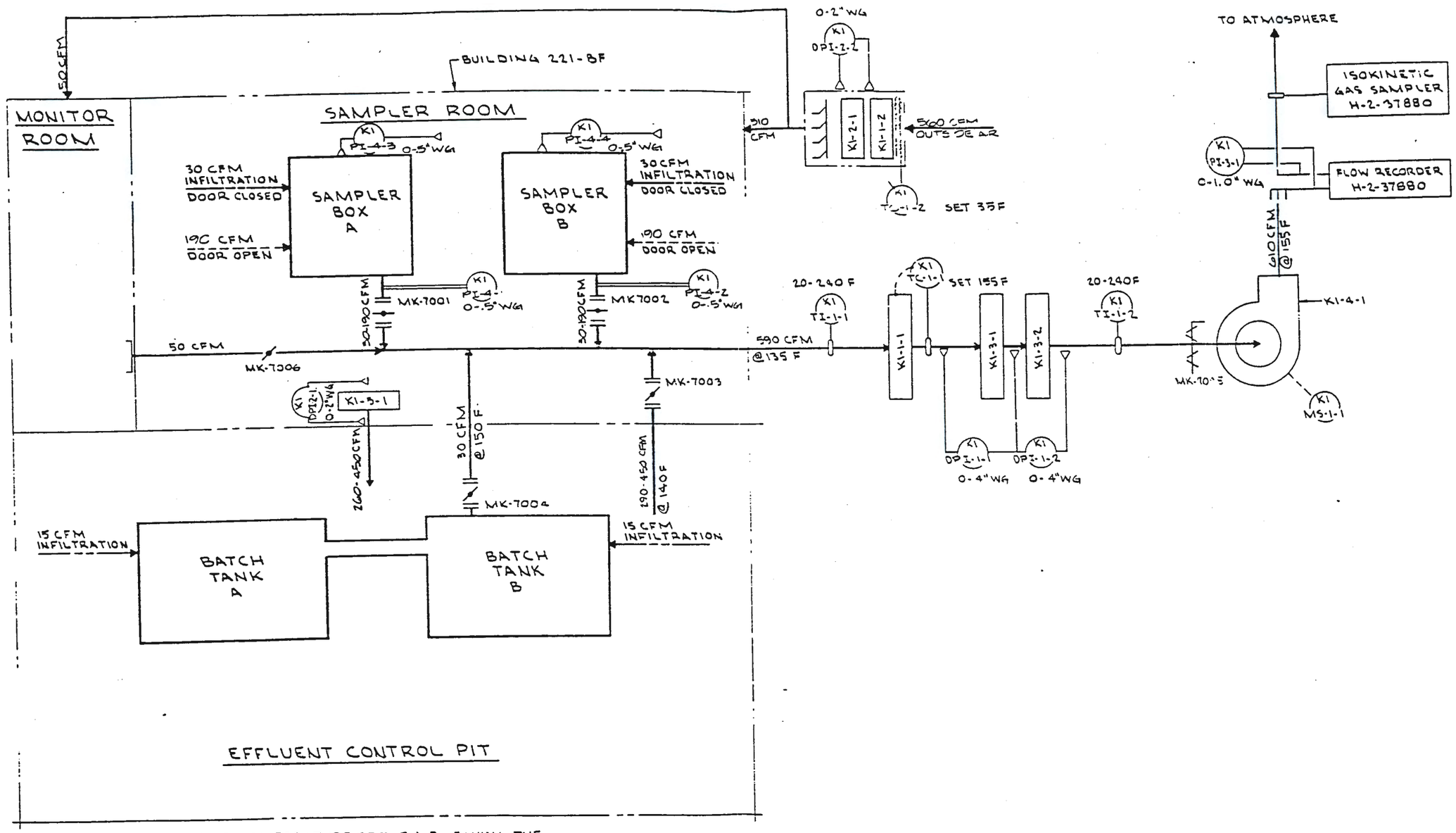


NOTE: THE VOLUME AND TEMPERATURE OF THE AIR LEAVING THE BUILDING WAS BASED ON OUTSIDE AIR ENTERING AT 96 F AND BOTH BATCH TANKS FULL OF 150 F CONDENSATE.

AIR FLOW AND CONTROL DIAGRAM

FIGURE 5-59. The 221-BF Airflow and Control Diagram.

THIS PAGE INTENTIONALLY
LEFT BLANK

THIS PAGE LEFT BLANK INTENTIONALLY.

9312899197 3

THIS PAGE INTENTIONALLY
LEFT BLANK

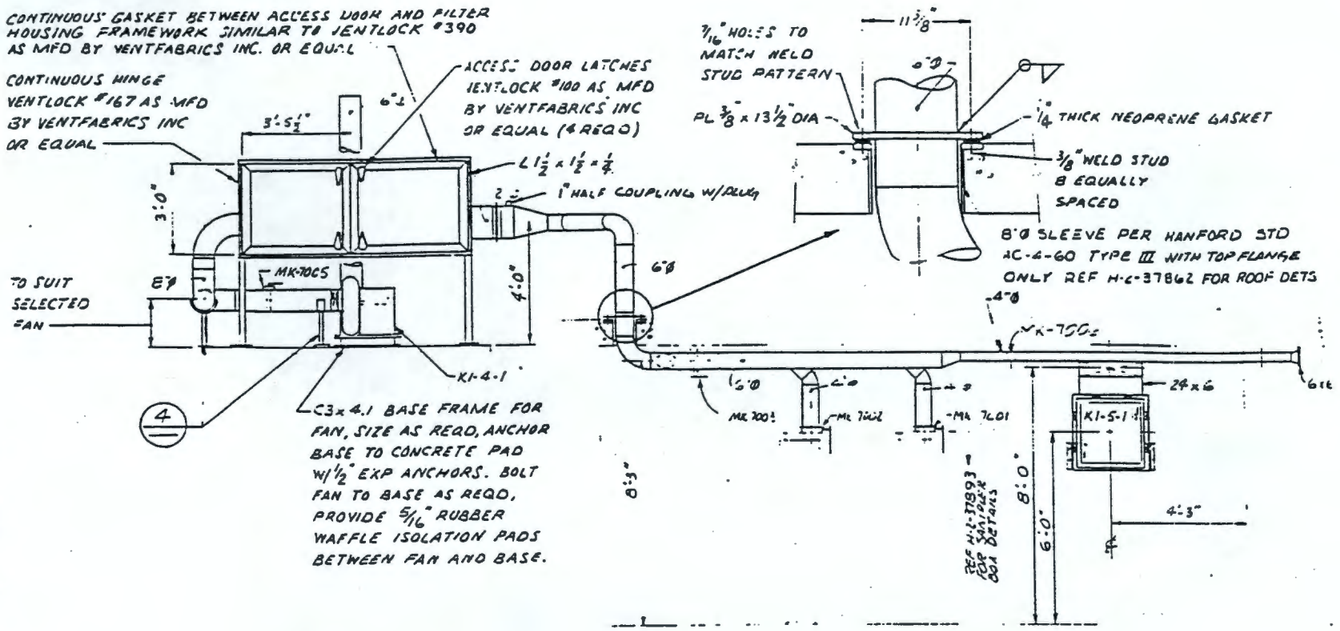


## CENTRIFUGAL FAN

| EQPT NO | DESIGN CFM | AIR COND °F | AIR COND GR/lb DA | EST EXT ST PR @ COND | MAX OV (FPM) | MECH EFF % MIN | CLASS | DISCH | ROTATION | ARRGT | TYPE | MOTOR HP | MOTOR RPM | MOTOR VOLTS | MOTOR PHASE | MOTOR HERTZ | ADDITIONAL DATA |
|---|---|---|---|---|---|---|---|---|---|---|---|---|---|---|---|---|---|
| K1-4-1 | 610 | 155 | 52 | 8.0 | 2600 | 60 | — | AUB | CCW | 10 | VOL FAN | 2 | 1800 | 480 | 3 | 60 | WITH WEATHERPROOF ENCLOSURE FOR MOTOR AND BEARINGS |

## BUTTERFLY VALVES AND DAMPERS

| MARK NO | DESIGN CFM | SIZE (INCHES) | AIR TEMP °F | | OPERATOR | ADDITIONAL DATA |
|---|---|---|---|---|---|---|
| MK 7001 | 190 | 4 | 100 | | MANUAL | W/LOCKING QUADRANT ANGLE |
| MK 7002 | 190 | 4 | 100 | | ↑ | ↑ |
| MK 7003 | 450 | 6 | 140 | | | ↓ |
| MK 7004 | 30 | 2 | 150 | | | W/LOCKING QUADRANT ANGLE |
| MK 7005 | 610 | 8 | 155 | | ↓ | OPPOSED BLADE VOLUME DAMPER |
| MK 7006 | 50 | 4 | 100 | | MANUAL | VOLUME DAMPER |
| | | | | | | |

## FILTERS

| EQPT NO | DESIGN CFM | SIZE (INCHES) | ARRANGEMENT HIGH | ARRANGEMENT WIDE | ARRANGEMENT NO FILTER | MAX FV (FPM) | RESISTANCE (WG) INITIAL | RESISTANCE (WG) MAX FINAL | TEST AND RATING | ADDITIONAL DATA |
|---|---|---|---|---|---|---|---|---|---|---|
| K1-2-1 | 560 | 24x24x2 | 1 | 1 | 1 | 500 | 0.05 | 0.10 | 36 LBS | WITH MET FRAME |
| K1-3-1 | 610 | 24x24x20 | 1 | 1 | 1 | 250 | 0.60 | 3.0 | HEPA | SELF CONTAINED HEPA |
| K1-3-2 | 610 | 24x24x20 | 1 | 1 | 1 | 250 | 0.60 | 1.0 | HEPA | SELF CONTAINED HEPA |
| K1-5-1 | 450 | 24x24x11½ | 1 | 1 | 1 | 250 | 0.35 | 0.50 | HEPA | GASKETS UPSTREAM & DOWNSTREAM FACES |

## ELECTRIC COILS

| EQPT NO | DESIGN CFM | BTU/HR | VOLTS | PHASE | HERTZ | ADDITIONAL DATA |
|---|---|---|---|---|---|---|
| K1-1-1 | 590 | [illegible] | 240 | 1 | 60 | DUCT HEATERS (2 REQD) |
| K1-1-2 | 560 | 30,740 | 480 | 3 | 60 | WEATHERPROOF, 18"-6 S.25 |

FIGURE 5-60. Equipment Information - 221-BF.



9312891974

THIS PAGE INTENTIONALLY
LEFT BLANK

THIS PAGE LEFT BLANK INTENTIONALLY.

9 3 1 2 8 0 9 1 9 7 5

THIS PAGE INTENTIONALLY
LEFT BLANK

5.9.4.1 Structure. The building is a prefabricated clear span, shed roof metal structure designed and constructed to be weather tight. The structure is anchored by bolts to the 18-ft by 18-ft by 4-in.-thick concrete floor. The basic stability is obtained from the wall and roof panels, which combine both the structural support and cover in one unit. The structure was designed for a wind load of 15 $lb/ft^2$ and a roof live load of 20 $lb/ft^2$. The fuel tanks are located inside concrete structures 10 ft west of the pumphouses and connected to the diesel engines by underground pipelines.

5.9.5 211-B Tank Farm Cold Chemical Facilities (Fig. 5-61)

This section provides a description of the facilities needed for nonradioactive chemical receiving, storage, make-up, and transfer to the in-canyon-cell equipment. These solutions are termed "cold streams" since they present "chemical" hazards with potential toxicogenic, carcinogenic, and/or explosive consequences but are devoid of radiological implications. The explosive hazards stem from rapid exothermic reactions of incompatible chemicals, or accidental combustion of dry chemicals, or deflagration/detonation of mist and vapors due to accidental ignition.

The facilities needed for the "cold" chemical receiving, storage, make-up and transfer to the in-canyon equipment consists of the chemical storage tank facilities in the 211-B Tank Farm Area, the organic make-up and storage in the 276-B Building with provision for underground tank storage of the diluent NPH, the chemical handling facilities on the third and first floors of the 271-B Building (AMU area), and the scale tanks located in the operating gallery.

5.9.5.1 Chemical Storage Tanks Facility (211-B Tank Farm Area). The chemical storage tanks facility is located north of the canyon and east of the 271-B service building. Table 5-21 lists the tanks in the farm along with the capacity, usage, headers, and tanks served. The information provided is the current specified usage of these tanks. However, these are tanks that can be used for other chemical storage, based upon their availability. At present, some tanks are being used as storage for the PUREX Plant.

5.9.5.1.1 Nitric Acid (SA-101, SA-102, and SA-103). Three vertical stainless steel tanks are presently tied into the nitric acid storage system. Weight factor indicators are installed on the three nitric acid storage tanks.

5.9.5.1.2 Demineralized Water (SD-111). This tank is lagged and equipped with a steam coil to maintain the water temperature at 70°F. A weight factor indicator controller is installed to control the flow of water through the demineralizer and into Tank SD-111. A "T" and valves on the line between the demineralizer and TK-SD-111 are provided so that cooler demineralized water than that from the storage tank can go to Tank MNB-173. Two stainless steel pumps of 50 gal/min capacity and 80-ft head are provided to pump water from TK-SD-111 to the 221-B Building Header 111 or to the 276-B Building.

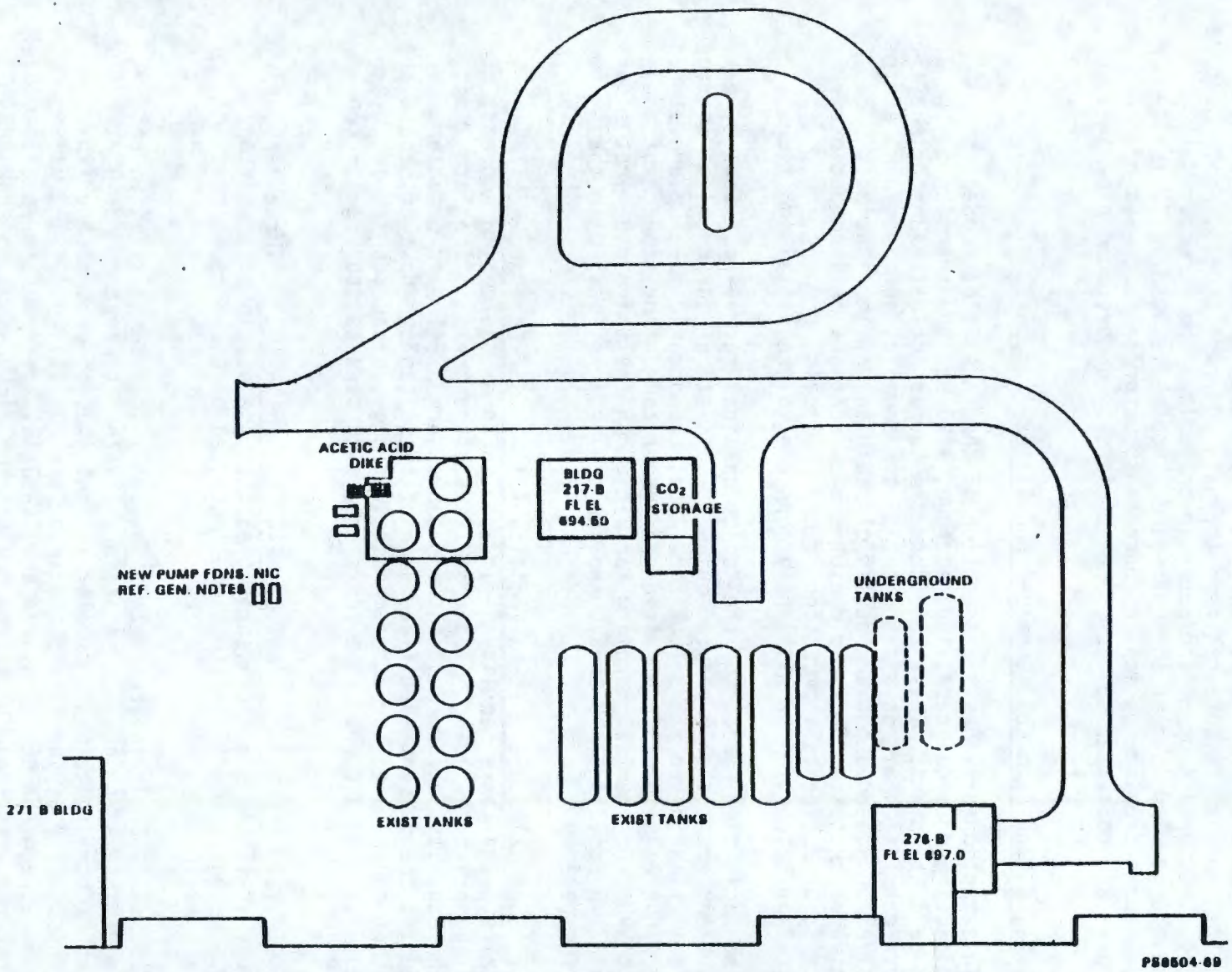


FIGURE 5-61. Tank Farm Plot Plan.

TABLE 5-21. Chemical Storage Tanks in 211-B Tank Farm. (Sheet 1 of 2)

| Chemical | | Tank | | Pump | | | | Tanks served | References |
|---|---|---|---|---|---|---|---|---|---|
| Stored | Wt.% | Number | Volume (gal) | Number | Head (ft) | Flow (gpm) | Header | | |
| 1 Nitric acid | 57 | SA-101<br>SA-102<br>SA-103 | 8,000<br>8,000<br>8,000 | PSA-5 | 70 | 50 | 309, 101, 102, 103 501 | H-302, H-303, H-304, H-312, H-313, H-314, H-315, H-318, H-319, H-321, H-309, H-501, H-402 | H-2-35343, H-2-35354, H-2-35355, H-2-35632, H-2-35632, H-2-35633, H-2-36121 |
| 2 Carbon dioxide | | SB-191 | 24 tons | | | | 191 | | H-2-36122, H-2-36125, H-2-36126 |
| 3 Demineralized water | | SD-111 | 18,000 | PSD-18<br>PSD-18-2 | 50 | 50 | 111 | H-301, H-302, H-303, H-304, H-305, H-312, H-313, H-314, H-315, H-316, H-318, H-319, H-320, H-321, H-401, H-402, H-101, H-102, MO-154 | H-2-35343, H-2-35353, H-2-35354, H-2-35355, H-2-35632, H-2-35633, H-2-36112, H-2-36123, H-2-36128 |
| 4 EDTA | | SE-125<br>SE-126<br>SE-127<br>SE-138+ | 8,000<br>8,000<br>8,000<br>8,000 | PCE-10<br>PSE-19 | 50<br>90 | 50<br>50 | 125, 126, 128 | H-403, H-316, H-402 | H-2-35354, H-2-35633, H-2-36124 |
| 5 Hydroxyacetic acid | 70 | SF-120<br>SF-121<br>SF-122 | 8,000<br>8,000<br>8,000 | PCF-1*<br>PSF-3<br>PSF-4 | 30<br>60<br>60 | 50<br>50<br>50 | 120, 121, 122, 502 | H-301, H-315, H-316, H-502, H-401, H-402 H-2-36126 | H-2-35354, H-2-35632, H-2-35633, H-2-36125, |
| 6 Spare | | SK-161 | 11,500 | PSK-9 | 80 | 35 | | | H-2-36123 |
| 7 Anhydrous Ammonia | | SN-172 | 12,200 | | | | 172 | Cell 21 | H-2-36122, H-2-35347 |
| 8 N-Paraffin hydrocarbon | | SO-151<br>SO-152 | 20,000<br>11,500 | PSO-21*<br>PSO-22 | 50<br>46 | 50<br>50 | MO-154 | MO-154 | H-2-36128, H-2-36129 |

TABLE 5-21. Chemical Storage Tanks in 211-B Tank Farm. (Sheet 2 of 2)

| Chemical | | Tank | | Pump | | | | Tanks served | References |
|---|---|---|---|---|---|---|---|---|---|
| Stored | Wt.% | Number | Volume (gal) | Number | Head (ft) | Flow (gpm) | Header | | |
| 9 Sodium hydroxide | 50 | SQ-141<br>SQ-142<br>SQ-143 | 18,000<br>18,000<br>18,000 | PCQ-1<br>PSQ-8 | | | 310, 311<br>141, 142, | H-301-1, H-302, H-303, H-305, H-310, H-311, H-315, H-316, 217B Demineralizer Unit | H-2-35343, H-2-35354, H-2-35355, H-2-35632, H-2-35633, H-2-36127 |
| 10 HEDTA | 41 | ST-131<br>ST-132 | 8,000<br>8,000 | PCT-11*<br>PST-15 | 30<br>60 | 50<br>50 | 127, 131, 132, 133 | H-305, H-403 | H-2035354, H-2-36126 |
| 11 Ammonium carbonate | | MNB-173 | 18,000 | PSNB-7<br>PSNB-7-A | 30<br>30 | 50<br>50 | 173<br>173 | Cell 21 | H-2-61056, H-2-36122, H-2-37182, H-2-35347 |

5.9.5.1.3 Ethylenediaminetetraacetic Acid - EDTA (SE-125, SE-126). A 40% aqueous solution of the sodium salt of ethylenediaminetetraacetic acid (EDTA) stored in a 24 ft dia. by 30 ft-high (8,000 gal) stainless steel tank. This EDTA storage tank is insulated with 2 in. of lagging and waterproof covering on sides and top. It has a 250,000 Btu/h steam coil with automatic controls and 15 lb steam and raw water services to maintain the contents of the tank at 70°F. This tank has both temperature and weight factor indicators. Pumps, provided for pumping EDTA to 271-B Building, are made of stainless steel and rated at 50 gal/min with an 80 ft head.

The south railroad tank car unloading station, used for unloading caustic and sulfuric acid, is equipped for unloading EDTA solution with a stainless steel pump (PCE-10) rated at 50 gal/min with an 80 ft head.

5.9.5.1.4 Hydroxyacetic Acid. Hydroxyacetic (glycolic) acid is received in railway tank cars as 70 wt% aqueous solution. The solution is stored in three 8000-gal vertical stainless-steel tanks, SF-120, SF-121, SF-122, located in the 211-B chemical tank farm.

5.9.5.1.5 Carbon Dioxide (Ref. 5-44, Fig. 5-62). Carbon dioxide is delivered to 211-B by tank truck and stored in a 24-t unit equipped with a 3-h integral refrigeration unit. The tank, designed for a maximum pressure of 363 psig at maximum and minimum temperatures of 650°F and -20°F respectively, holds bulk carbon dioxide at 300 psig and 0°F. The tank, located on a 6-in.-thick reinforced foundation slab 29 ft long and 5 ft wide, is insulated with polyurethane foam and covered with a skin made up of polyester resin reinforced with a fiberglass material.

A pump-down refrigeration system is used with a thermostatic expansion valve and a fully hermetic condensing unit. The valves on the refrigeration circuit are opened and the electrical system is energized sequentially to start the refrigerator.

A Barton hydrostatic liquid-level gauge, sensitive to ambient temperatures at 0°F or lower and a scale graduated in tenths from empty to full is used on this unit. Static pressure lines leading to the gauge are lagged and traced with heating tapes to prevent loss of instrument accuracy due to condensation at low temperatures. Three pressure relief valves are provided. The failure of the refrigeration unit will open the bleeder valve at 341 psig and vent the tank until remedial measures can be taken. The main pressure relief valve, set at 375 psig, should not open, but, in the event that it does open and does not re-seal, the standby safety valve can be used.

Carbon dioxide is sparged into the contents of Tank MNB-173, used for weight factor and inert blanket purge of SF and ST tanks and sparged into 221-B Cell Tank 21-1 via nozzle 12, Cell 21 in the pipe gallery. Automatic controls are such that an air purge follows the shut off of carbon dioxide flow to Tanks MNB-173 or Cell Tank 21-1.

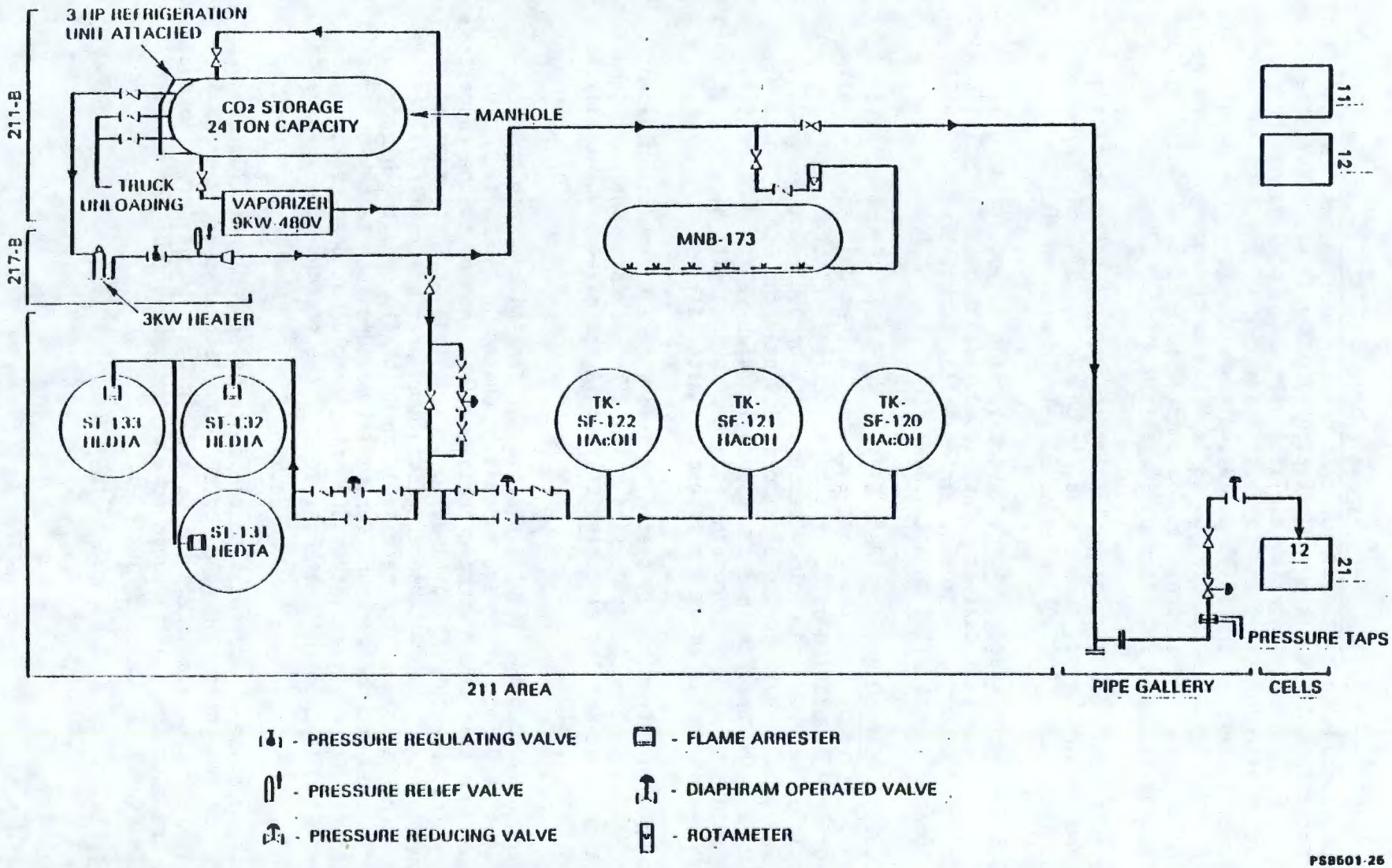


FIGURE 5-62. Carbon-dioxide Storage and Header System.

5.9.5.1.6 Ammonia Storage (Fig. 5-63). Anhydrous Ammonia is delivered by tank truck and stored in a pressure vessel (SN-172) in the far northeast corner of the 211-B area to allow dispersal of fumes by prevailing winds. The storage tank (with dimensions of 7 ft, 1/2 in. dia. and 38 ft, 11 1/2 in. in length with a 3/4-in. nominal shell thickness), was constructed in accordance with the ASME Boiler and Pressure Vessel code for a maximum pressure of 265 psig at maximum and minimum temperatures of 650°F and -20°F, respectively. The tank is painted with heat-reflecting white paint. The tank is equipped with an 85% bleeder to prevent overfilling, two pressure relief valves rated at a minimum flow rate of 5.300 scfm of air and installed on a four-way manifold to allow valve repair; a liquid level gage and a pressure indicator; and facilities for filling from a tank truck. The tank has two outlets; one outlet is for ammonia to Tank MNB-173 (Ammonium Carbonate make-up tank) and the other outlet is the supply line of ammonia to Cell 21 via nozzle 2 in the pipe gallery. Both lines are a minimum of 30 ft from ground level with a pressure relief valve at the high point.

5.9.5.1.7 Ethylenediamenetetraacetic (EDTA) Acid. The sodium salt of the chelating agent ethylenediaminetetraacetic acid is received in tank cars as 40 wt% aqueous solution. The material is stored in four 8,000-gal vertical stainless-steel tanks, SE-125, SE-126, SE-127, and SE-128, located in the 211-B chemical tank farm. Tanks SE-125, SE-126, and SE-127 are lagged and equipped with steam coils to keep the material from freezing. Tank SE-128 can be used for emergency chelate storage, but is neither lagged nor equipped with a steam coil.

5.9.5.1.8 Nitric Acid. Nitric acid is received in tank trucks and is air blown into one of the three storage tanks from which it is pumped into one of the AMU storage tanks.

5.9.5.1.9 N-Parrafin Hydrocarbon. The organic diluent n-paraffin hydrocarbon (NPH) is received in railway tank cars and stored in two mild steel storage tanks buried underground adjacent to the 276-B (organic make-up) building. Tank SO-151 has a capacity of 20,000 gal and tank SO-152 has a capacity of 11,500 gal.

5.9.5.1.10 Sodium Bisulfate. Sodium bisulfate is received as a bulk dry chemical and is stored on the first floor of the 271-B Building.

5.9.5.1.11 Sodium Carbonate. Sodium carbonate is received as a bulk dry chemical and is stored on the first floor of the 271-B Building.

5.9.5.1.12 Sodium Hydroxide. Caustic solution is received in railway tank cars as a 50% aqueous solution. The caustic solution is stored in three 16,000-gal mild steel horizontal tanks, SQ-141, SQ-142, and SQ-143, located in the 211-B chemical tank farm. The caustic storage tanks are lagged and steam-heated. All exterior caustic lines are also lagged and steam-traced.

5.9.5.1.13 Sodium Nitrate. Sodium nitrate is received as a bulk dry chemical and is stored on the third floor of the 271-B Building.

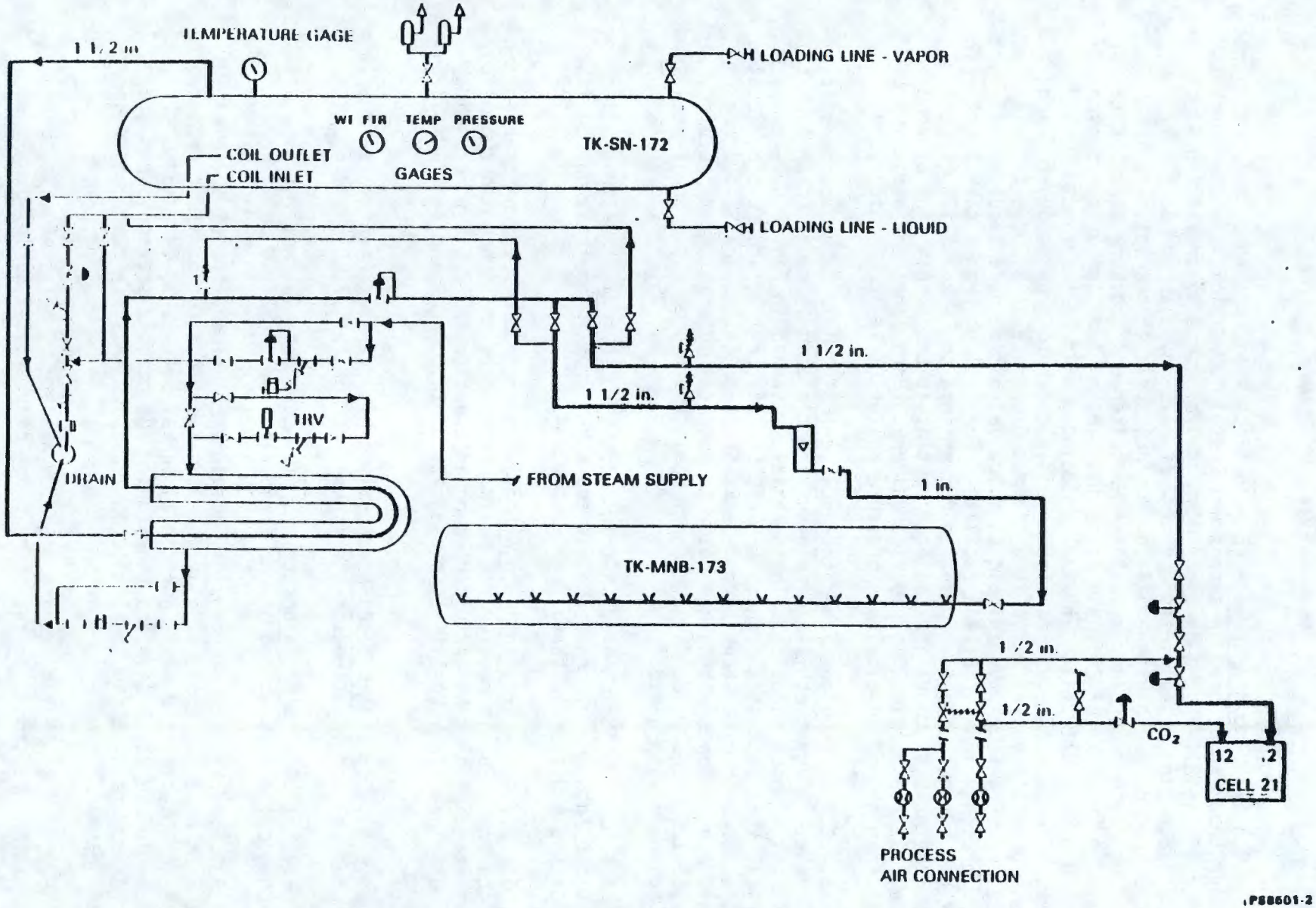


FIGURE 5-63. Tank SN-172 Ammonia Storage System.

5.9.5.1.14 Hydroxyethylenediaminetetraacetic (HEDTA) Acid. Hydroxyethylenediaminetetraacetic (HEDTA) is received in railway tank cars as an 80 wt% aqueous solution. The acid is stored in three 8,000-gal vertical stainless-steel tanks ST-131, ST-132, and ST-133 located in the 211-B chemical tank farm. The three storage tanks are surrounded by a 3-ft concrete dike. The storage tanks are lagged and heated, and the piping system is team-traced to prevent the acid from freezing. From the chemical tank farm, HEDTA is pumped to weight tank WT-503 on the third floor mezzanine of the 271-B Building.

5.9.5.1.15 Citric Acid. Citric acid is received as a bulk crystalline dry chemical and is stored on the third floor of the 271-Building.

5.9.5.1.16 Di(2-ethylhexyl)phosphoric Acid. The organic solvent di(2-ethylhexyl)phosphoric acid is received as aqueous solution. The acid is stored in three 8,000-gal stainless-steel storage tanks located in 276-B.

5.9.5.1.17 Tributyl Phosphate (TBP). Tributyl phosphate used in solvent make-up is received in 55-gal drums and is stored on the loading platform of the 276-B Building. Care must be taken not to confuse TBP and D2EHPA drums which are stored in the same location.

5.9.5.1.18 Zeolon. The ion exchange medium Zeolon 900 is received as bulk dry material and is stored on the third floor of the 271-B Building.

5.9.5.2 Aqueous Makeup and Scale Tanks (271-B Third Floor and the Operating Gallery (Tables 5-22 and 5-23, Fig. 5-64). These tanks rest on scales and are located in the operating gallery. They are used to meter chemical solutions for the process. The tanks are generally of 400-gal operating capacity resting on a 6,000-lb capacity scale. The tanks marked (*) and (**) are 60 and 75-gal capacity tanks resting on a 1,200-lb capacity scale. The tanks marked (+) are lagged and those having numerals marked beside them have pumps. These scale tanks have more than one number designated to them and, thus all numbers pertaining to a single tank are designated within the bracket.

These tanks are used flexibly for the process as required. However, the undernoted are examples of the scale tank usage:

- Head End, Sulfate Precipitation, Caustic Strike

  Nitric acid solutions or demineralized water are blended and metered via Tanks (12-2B, 11-1C, 12-2C, 11-2-E, 11-1-E, and 12-1-E). Tank (12-2B) is equipped with an agitator, steam coils, and a pump for pumping solution through either G-12-2 bowl or case spray nozzle. Tank (11-1-C) is a lagged, multi-purpose tank equipped with an agitator and coils. Tank (11-2-E) is also a multi-purpose tank equipped with an air sparger and feeds the canyon tanks by gravity.

TABLE 5-22. Aqueous Makeup Tanks (H-2-61127, H-2-61126, H-2-61128). (Sheet 1 of 2)

| Tank | Agitator hp | Capacity (gal) | Coils cooling area ($ft^2$) | Duty (Btu/h) | Reference |
|---|---|---|---|---|---|
| H-301-1 | 1 | 75 | | | H-2-61050 |
| H-301 | | 550 | 1 | | H-2-61050 |
| H-301-1A | | 100 | | | H-2-61050 |
| H-302 | 1 | 800 | 22 | $2.0 \times 10^5$ | H-2-61050 |
| H-303 | 1 | 800 | 22 | $2.0 \times 10^5$ | H-2-61050 |
| H-304 | 1 | 600 | 21 | $2.0 \times 10^5$ | H-2-61050 |
| H-305 | 1/2 | 600 | 21 | $2.0 \times 10^5$ | H-2-35343 |
| H-306 | | 130 | | | H-2-61051 |
| H-307 | | 130 | | | H-2-61051 |
| H-309 | | 600 | | | H-2-35343 |
| H-310 | | 600 | | | H-2-35343 |
| H-311 | | 600 | | | H-2-35343 |
| H-312 | | 600 | 12 | $1.0 \times 10^5$ | H-2-61051 |
| H-313 | 1/2 | 600 | 13.5 | $3.0 \times 10^5$ | H-2-61051 |
| H-314 | 1/2 | 600 | 13.5 | $3.0 \times 10^5$ | H-2-61051 |
| H-315 | 1/2 | 600 | 27 | $2.5 \times 10^5$ | H-2-61051 |
| H-316 | 1/2 | 600 | 27 | $2.5 \times 10^5$ | H-2-61051 |
| H-318 | 1/2 | 600 | 13.5 | $3.0 \times 10^5$ | H-2-61050 |
| H-319 | 1/2 | 600 | 13.5 | $3.0 \times 10^5$ | H-2-61050<br>H-2-35355 |
| H-320 | 1/4 | 75 | 6 | $3.0 \times 10^5$ | H-2-61050<br>H-2-35355 |

TABLE 5-22. Aqueous Makeup Tanks (H-2-61127, H-2-61126, H-2-61128). (Sheet 2 of 2)

| Tank | Agitator hp | Capacity (gal) | Coils cooling area ($ft^2$) | Duty (Btu/h) | Reference |
|---|---|---|---|---|---|
| H-321 | 1 1/2 | 1,600 | 95 | $5.0 \times 10^4$ | H-2-61050<br>H-2-35355 |
| H-401 | | 530 | 12 | $1.0 \times 10^5$ | H-2-61051 |
| H-403 | 1/2 | 100 | | | H-2-61051 |
| H-101 | 2 | 1,000 | 35 | $2.5 \times 10^5$ | H-2-61050 |
| H-102 | 2 | 2,500 | 25 | $1.0 \times 10^5$ | H-2-61050 |
| H-317 | | | | | |
| H-405 | 1/2 | 100 | | | H-2-61051 |
| H-402 | | 550 | 6 | $5.0 \times 10^4$ | H-2-61051 |
| H-402-1 | | 30 | | | H-2-61051 |
| H-501 | | 140 | | | H-2-61051 |
| H-502 | | 140 | | | H-2-61051 |
| H-503 | | 140 | | | H-2-61051 |

TABLE 5-23. Chemical Headers to Operating Gallery Scale Tanks. (Sheet 1 of 2)

| Scale tank | Chemical headers | Cell equipment | Cell tank | Cell tank |
|---|---|---|---|---|
| 5-2F | 111,403, 305 | 5-2 | | |
| 5-1A, 5-2A | 111, 305, 309, 310 | 5-3 | E-5-2 | Cask pump |
| 6-1A, 6-2A | 111, 305, 309 | 6-1 | 6-2 | |
| 7-1A, 7-2A | 111, 305, 309 | 7-1 | 7-2 | |
| 8-1A, 8-2A | 111, 305, 309 | 8-1 | 8-2 | |
| 9-1A, 9-2A | 111, 305, 309 | 9-1 | 9-2 | |
| 11-2D | 111 | 11-2 | | |
| 11-1C-1-1C, 11-2C, 12-2C | 111, 305, 309, 310, 102 | 11-2<br>11-1 | 12-2 | 10-1 |
| 11-1E, 11-2E, 12-1E | 111, 305, 309, 310 | 11-1 | 11-2 | 12-1 |
| 12-2B | 111, 305, 309, 310, 102, HEDTA | Bowl | Case | Pump |
| 13-1A, 14-2A | 111, 305, 301, 101, 403, 309, 301 | 13-1 | 14-2 | |
| 13-2A | 111, 305, M0154, 309, 403, 310, 303-304 | 13-2 | Bowl | Case |
| 13-2D (disconnected) | 111, 305, 310 | Case | Bowl | Pump |
| 14-1E | 111, 305, 310, 101, 403 | 14-1 | | |
| 15-D | 111, 305, 403, 303, 304, 101 | 22-2 | 23-2 | Pump |
| 17-1A 17-2A, 18-1A | 111, 305, 310 | 17-1 | 17-2 | 18-1 |
| 18-3C, A-18-3C | 111, 305, 310 | 18-3 | | Pump |
| 19-1B | 111, 305 | 19-1 | | |
| 20-1A, 20-2A, 21-1A | 111, 305 | 20-1 | 20-2 | 21-1 |
| 23-1F, 23-3F, 22-1F | 111, 305, 310 | 24-1 | | |

TABLE 5-23. Chemical Headers to Operating Gallery Scale Tanks. (Sheet 2 of 2)

| Scale tank | Chemical headers | Cell equipment | Cell tank | Cell tank |
|---|---|---|---|---|
| 26-1A, 26-3A, 27-3A | 111, 305, 310, 302, 102 | 26-1 | 26-3 | 27-2 |
| 26-2A | 111, 305, 310, 309, 301, 402 | 26-2 | | |
| 28-3C, 30-3C | 111, 305, 310, 309 | 38-3 | 30-3 | |
| 28-1F | 111, 310, 312 | 28-1 | | Pump |
| 28-2E, 27-2E | 111, 305, 309 | 28-2 | 27-2 | |
| 29-1F | 111, 305, 402 | 29-1 | | Pump |
| 29-2E, 29-3E | 111, 309, 315, 310 | 29-3 | 29-2 | |
| 29-2B | 111, 309, 310 | 29-2 | | |
| 29-2A | 111, 305, 315-316 | 29-2 | | |
| 30-1C, 30-2C, 30-3C | 111, 305 | 30-1 | 30-2 | 30-3 |
| 31-1A, 31-3A | 111, 305, 102, 101 | 31-1 | 31-3 | |
| 31-1F, 31-2F | 111, 305, 310, 102 | 31-1 | 31-2 | |
| 31-3E | 111, 309, 401 | 31-3 | | |
| 32-1B, 33-1 | 111, 305, 310 | 32-1 | | 33-1 |
| 32-2C | 111, 305, 309, 310, 101 | 32-2 | Bowl | Case pump |
| 34-1A | 111, 305 | | 34-1 | |
| 35-1A, 35-2A | 111, 305, 309, 310 | 35-1 | 35-2 | |
| Funnel | | 37-2 | 37-3 | 37-1 |

NOTE: Tanks with more than one number (i.e., 13-1A, 14-2A) serve as chemical addition tanks to more than one cell vessel.

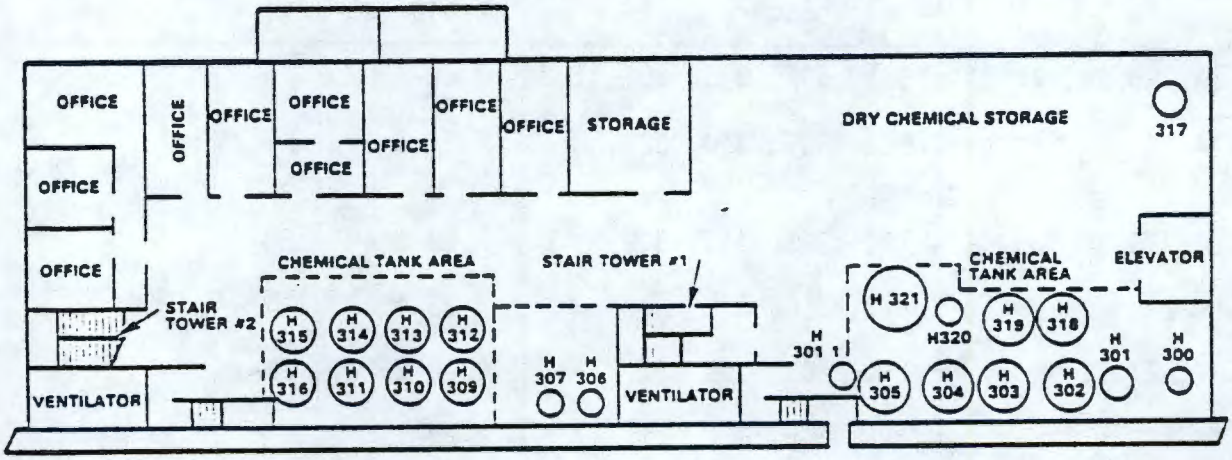


271-B THIRD FLOOR PLAN

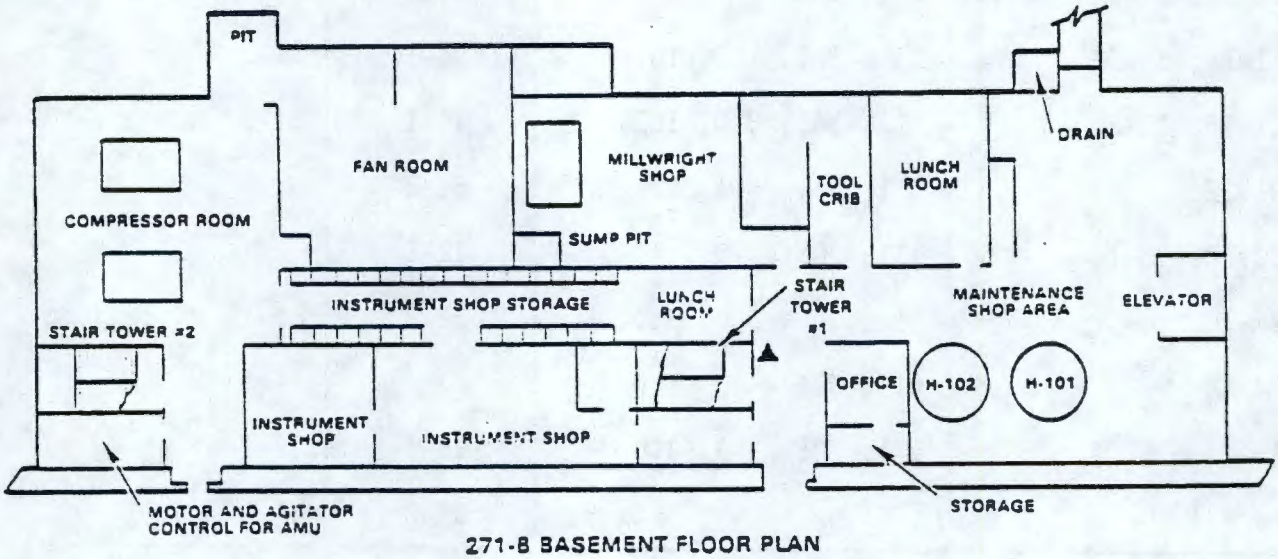


271-B BASEMENT FLOOR PLAN

▲ HAND AND FOOT COUNTER

PS8501-23

FIGURE 5-64. Aqueous Makeup Area.

- Cell 18 - Ion Exchange

  Sodium hydroxide, ammonium carbonate, nitric acid, HEDTA, and demineralized water for recycling, complexing, and flushing are added to the Canyon Tanks (17-1-A, 18-3-C, 19-1-B, and 20-1-A).

- Cell 38 - Ion Exchange

  Tank 38-A has an agitator, heating and cooling coils, a pump, and $HNO_3$, and demineralized water headers. It is mainly used for adding water to Cell 38 and 39 vessels and also used for neutralization with NaOH.

  Tank 39-A is equipped with an agitator, a pump and nitric acid, and demineralized water headers. The pump is used to route solution to the concentrator packed section and deentrainer pads for cleaning.

- Solvent Extraction

  Citric Acid, HEDTA, EDTA, and Hydroxyacetic acid are added for complexing unwanted polyvalent cations and for buffering the solution to maintain the required pH level via Tanks 26-2-A, 26-1A, 28-1F, 26-1F, 30-1C, 27-2E, 28-3C, 29-3E, 29-2-B, 31-1A, 31-1F/31-2-F, 32-1B, and 32-2C.

- Waste Concentration

  Sodium hydroxide, nitric acid, and demineralized water for adjustment of pH, nitric acid boilups, and flushes are added to canyon tanks and concentrator E-23-3 via Tanks 23-1-F, 24-1-B, 25-1-A, and 26-3-A.

5.9.5.3 Survivability of 211-B Tank Farm (Ref. 5-7). The 9-ft-dia. by 36 ft long horizontal stainless steel (SS) tank design is deficient in that the full tank weight alone creates soil pressures that are unacceptably low factors of safety about 1.2, where normal design practices dictate 3.0 or greater. The seismic ground motions (either HRHE or SSE) will create excessive soil bearing pressures and overturning moments, with the probable result of the collapse of these tanks. The tornado wind loads will similarly affect these tanks but the missiles are not anticipated to affect the relatively thick shells of these tanks.

The seismic analysis of the 10-ft-dia. by 14-ft-high vertical SS tank indicates that the horizontal loading will buckle the vertical portions of the exterior reinforcing and overload the foundation anchors. Other seismic effects include localized buckling of the light gage shell. The tank will remain stable, because the tornado wind loads do not create a net overturning moment on the tank, but the tornado missiles are expected to penetrate the light gage shell.

Any significant lateral forces or displacements due to either HRHE or SSE will result in piping failure, because no horizontal seismic restraints. The access platforms, considering the age, deterioration, and lack of lateral bracing will collapse due to seismic motions and tornado winds.

5.9.6 217-B Demineralizer Building (Fig. 5-65)

The sanitary water, containing large quantities of dissolved ionic impurities, must be purified before it is suitable for process use in B Plant. The demineralizer building is located in the 211-B tank farm area.

The demineralized water for B Plant process is prepared by use of a duplex bed ion exchanger. The cations are removed from the sanitary water by a bed containing 100 $ft^3$ of Nalcite HCRW, a strong acid resin. The anions are then removed by a mixed bed containing 32 $ft^3$ of Amberlite IRA-93, a weak base resin, and 30 $ft^3$ of Amberlite IRA-402, a strong base resin. The cations removed include such elements as calcium, sodium and magnesium. The anions removed via the weak base resin includes (strong acids), sulfates, and chlorides, while the anions removed via the strong base resin include (weak acids), carbolic acid, and silica.

Normally the demineralizer handles approximately 240,000 gal of sanitary water at a rate of 50 gpm before it must be regenerated. The cation unit is regenerated by passing dilute sulfuric acid through the bed (returned to its normal hydrogen ion state). The anion unit is regenerated by passing dilute caustic (NaOH) through its bed (returned to its normal hydroxide ion state).

During normal operation, sanitary water passes through the cation and anion columns at 50 gal/min and is either routed directly to B Plant process by way of the 111 header or to the demineralized water storage tank SD-111. The treated water has the following specifications:

| | | | | |
|---|---|---|---|---|
| Total hardness (as $CaCo_3$) | less than | 2 | ppm |
| Calcium | " | " | 0.2 | ppm |
| Magnesium | " | " | 0.01 | ppm |
| Strontium | " | " | 0.01 | ppm |
| Sodium | " | " | 0.1 | ppm |
| Chloride (as NaCl) | " | " | 0.1 | ppm |
| Sulfates (as $Na_2SO_4$) | " | " | 1.5 | ppm |
| Dissolved solids | " | " | 4.5 | ppm |
| Silica (as $SiO_2$) | " | " | 7.5 | ppm |
| pH | " | " | 5 to 8 | ppm |

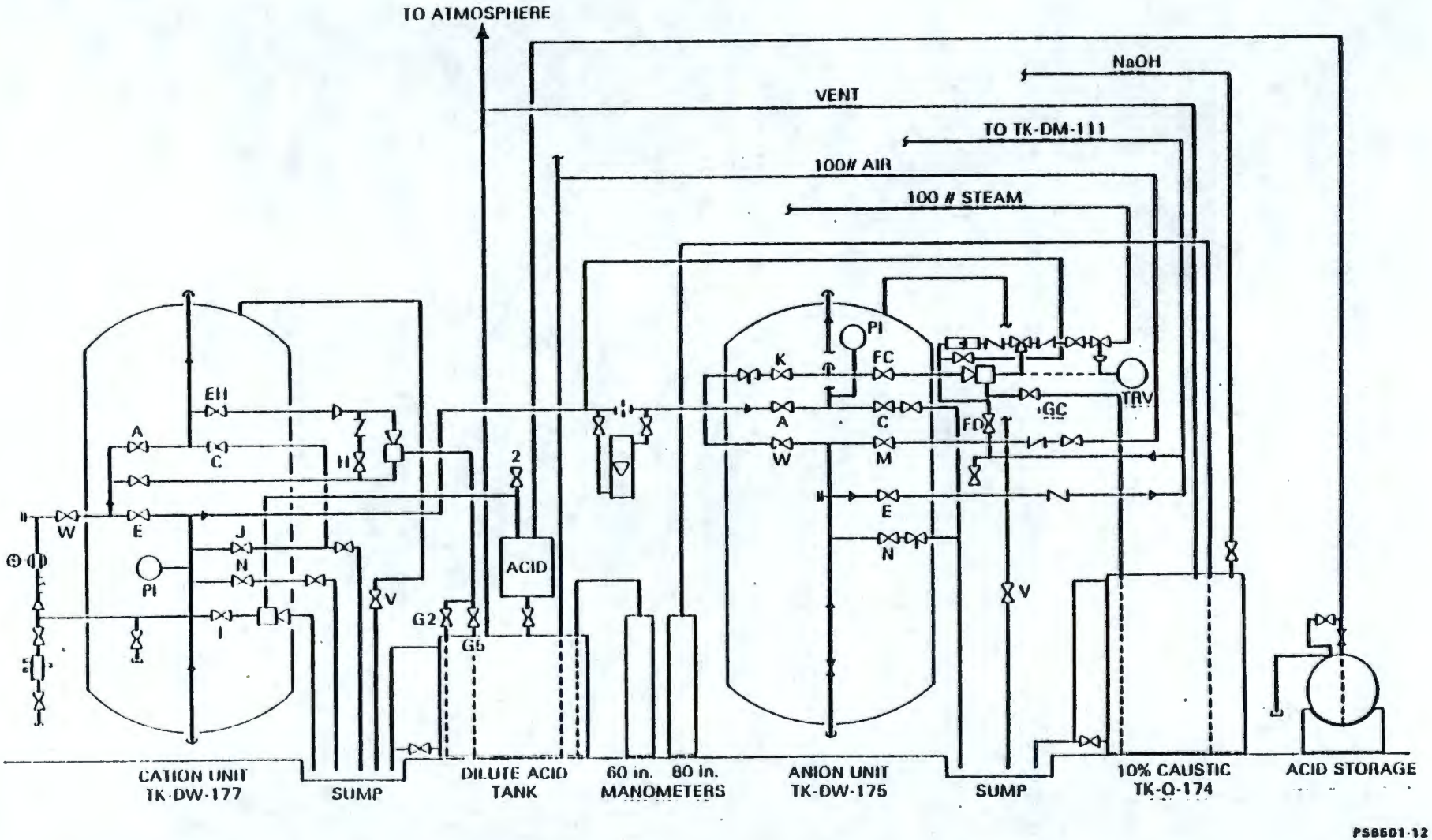


FIGURE 5-6'5. Demineralizer Unit (217-B).

The building is equipped with portable fire extinguishers and the nearest fire hydrant is 60 ft east of the building.

5.9.6.1 Structure. The building is one level on grade with a 24 ft by 20 ft concrete floor slab. The walls are corrugated asbestos siding supported by four I-beam corner columns with horizontal and vertical structural beams, stiffeners, and diagonal braces. The building has a single panel door on the south side and a double panel swing door on the north side. There are two clear glass windows on the east and west end of the building. The building has an occupancy classification of special purpose industrial and a construction classification of unprotected noncombustible.

5.9.6.2 Ventilation. There is a 30 in. gravity roof ventilator with an adjustable damper and a 9 in. vent. The building is equipped with a heater for the winter.

5.9.6.3 Survivability of 217-B Demineralizer Building. The building, a structure with corrugated asbestos siding is cross-braced in all directions. It qualifies as a low-mass, high stiffness structure and hence, seismic resistant. The building is vulnerable to the 145-mph tornado.

5.9.7 276-B Solvent Building

The solvent building and storage area are attached to Sections 4 and 5, north of the 221-B Building. The building is a 14 ft high single-storied construction built upon a concrete platform raised 3 ft above finished grade. The operating portion of the building, 35 ft 4 in. by 20 ft, is of hollow, load-bearing concrete blocks and reinforced concrete roof slab. Along the east end of the building is a 10 ft by 21 ft 6 in. drum unloading station with two 3 gal/min pumps powered by 90 psig air supply. Piping is provided with quick disconnects so that TBP or D2EHPA may be pumped from drums to their respective head tanks (MO-145, MO-155) equipped with 7.5-hp agitators. Weight factor and specific gravity indicators and decant valves that drain via stainless steel funnels to the chemical sewer are also provided. There are two 400 gal head tanks equipped with weight factors for D2EHPA, and TBP located on the floor. The tanks are all vented to the atmosphere. PMO-23, a 50-gal/min, 61-ft head stainless steel pump, is installed on the operating deck to pump organic to Nozzle 49, Cell 28 for use in the solvent extraction process.

The building is heated with a steam space heater and cooled with an evaporative cooler. Flood lights are provided over dock and storage area. Lighting fixtures are vapor-proof and safety-showers are provided inside the building storage area.

5.9.7.1 Diluent Storage Tanks (TK-SO-151, TK-SO-152). The diluent storage tanks of capacities 11,500 and 20,000 gal are located 3 ft 6 in. below grade, 18 ft 6 in. north of the 276-B Building (H-2-60302). Piping is provided for pumping the diluent from railroad unloading station car spot No. 2 with pump (P-SO-22) to the two storage tanks. The two outlets, one

from each tank, are at the bottom of the tank. There is a check valve and a priming tank, which can be attached to the suction of 100 psig air-operated jet with a plastic tubing upstream of the diluent transfer pump (P-SO-22, H-2-36129). The diluent transfer pumps (PSO-21 and PSO-22) are carbon steel, rated at 50 gal/min with a 50 and 46 ft head, respectively.

Di(2-ethylhexyl) phosphoric acid-(D2EHPA) and tri-n-butyl phosphate (TBP) are received in drums and stored in the 276-B Building.

5.9.7.2 Heating and Ventilation.

5.9.7.2.1 Unit Heater (KI-1). The horizontal unit heater with finned tubes in steel casing and adjustable louvers is sized for 275,000 Btu/h heat output with 15 psig steam and 4,000 $ft^3$/min minimum airflow at an ambient temperature of 40°F.

The 115 V, 60 cycle, single-phase fan motor is rated at 1/3 hp, 1,750 maximum rpm. The motor is an explosion-proof rated for Class I, division 2, group "D" service and the entire unit is HMCA spark-resistant type "B" construction.

## 5.10 UTILITIES AND FIRE PROTECTION SYSTEM

### 5.10.1 Electricity

The Bonneville Power Administration, through its substations at Vernita and White Bluffs, supplies power to the Hanford loop at 251-W substation A8 by 230-kV overhead equipped lines equipped with static wire protection (H-5-102). Two independent sources are available to the loop to allow multiple component failure without irredeemable power loss. From the 251-W substation A8, with two 230/13.8 kV transformers, power lines are routed to site facilities via dual independent overhead lines, C8-L1 through C8-L4 to 200 West Area and C8-L5 through C8-L8 to 200 East Area, respectively (H-2-2126).

5.10.1.2 Main Distribution Feeders. Electric power from the 251-W substation A-8 is transmitted by two independent 13.8 kV overhead lines C8-L6 and C8-L7 (Fig. 5-66) to two platform mounted substations with one 13.8-2.4 kV, 1,000 kVA transformer bank on each platform (H-2-2126, sheet 2). 2,400 V electrical power from the platform substations is delivered to B Plant on two "normal" incoming lines E8-L53 and E8-L58. 2,400 V "emergency" power is delivered to B Plant from the 284 power house via line E8-L66. Currently, the "normal" lines enter the building from the south side and feed through the main 2,400 V switchgear in the electrical gallery (at section 12) to transformers located outside and adjacent to the north side of the building (Fig. 5-67). These transformers are rated 2,400-480 V and 2,400-120/240 V. The 480 V power from the transformers is

This Page Intentionally Left Blank

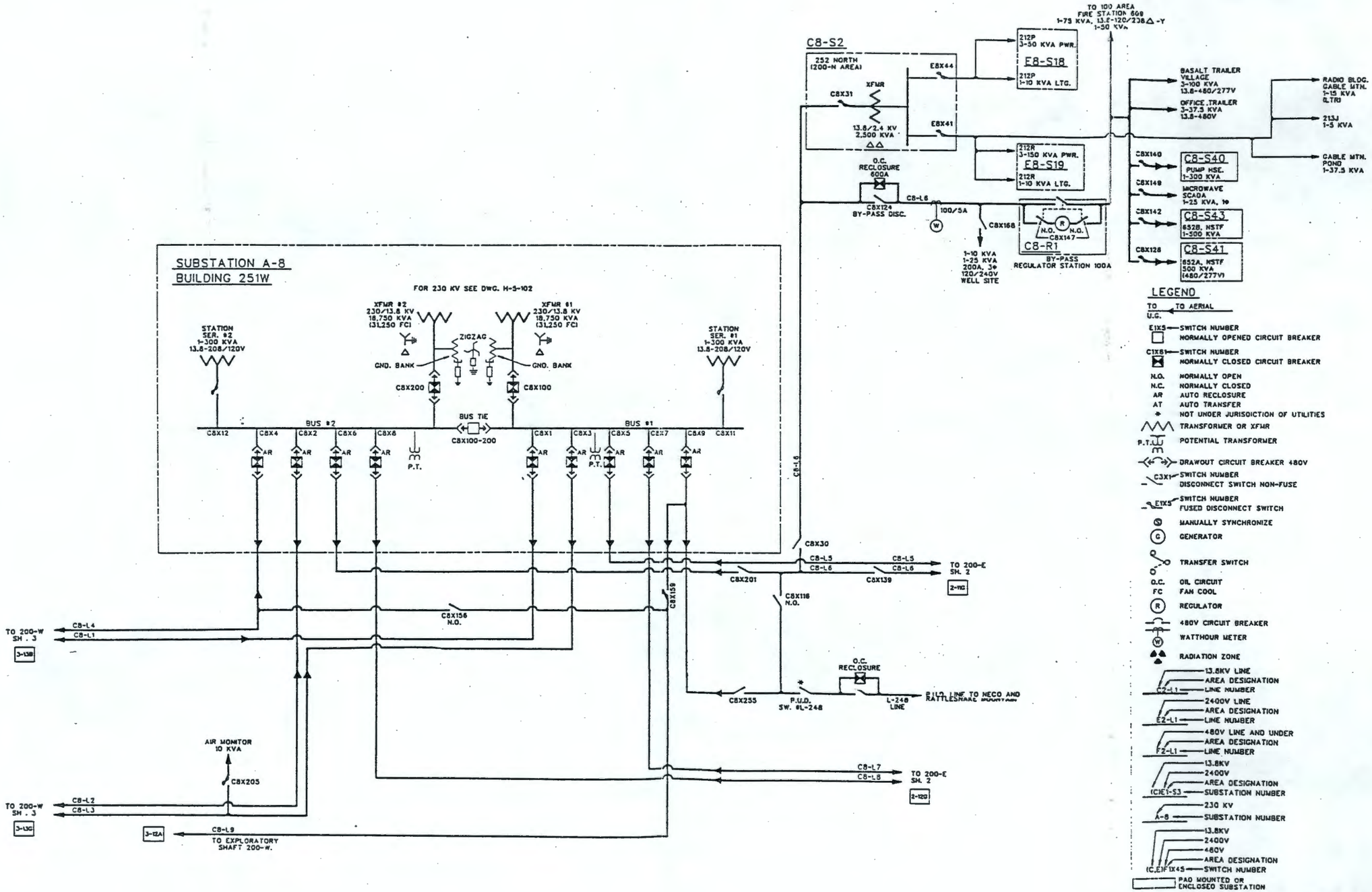


FIGURE 5-66. Electrical Diagram 1. (Sheet 1 of 3)

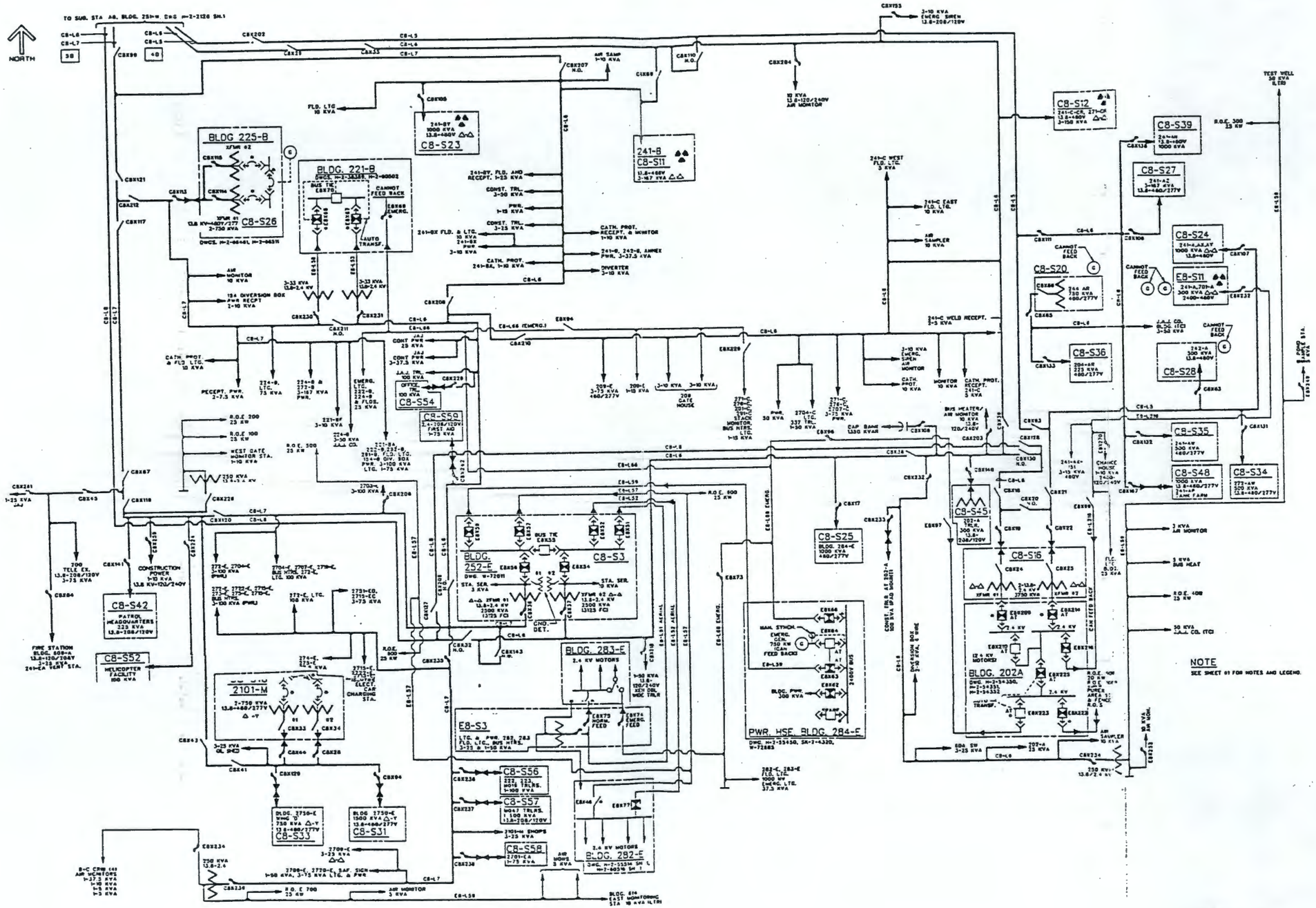


FIGURE 5-66. Electrical Diagram 1.
(Sheet 2 of 3)

THIS PAGE LEFT BLANK INTENTIONALLY.

9312899998

THIS PAGE INTENTIONALLY
LEFT BLANK

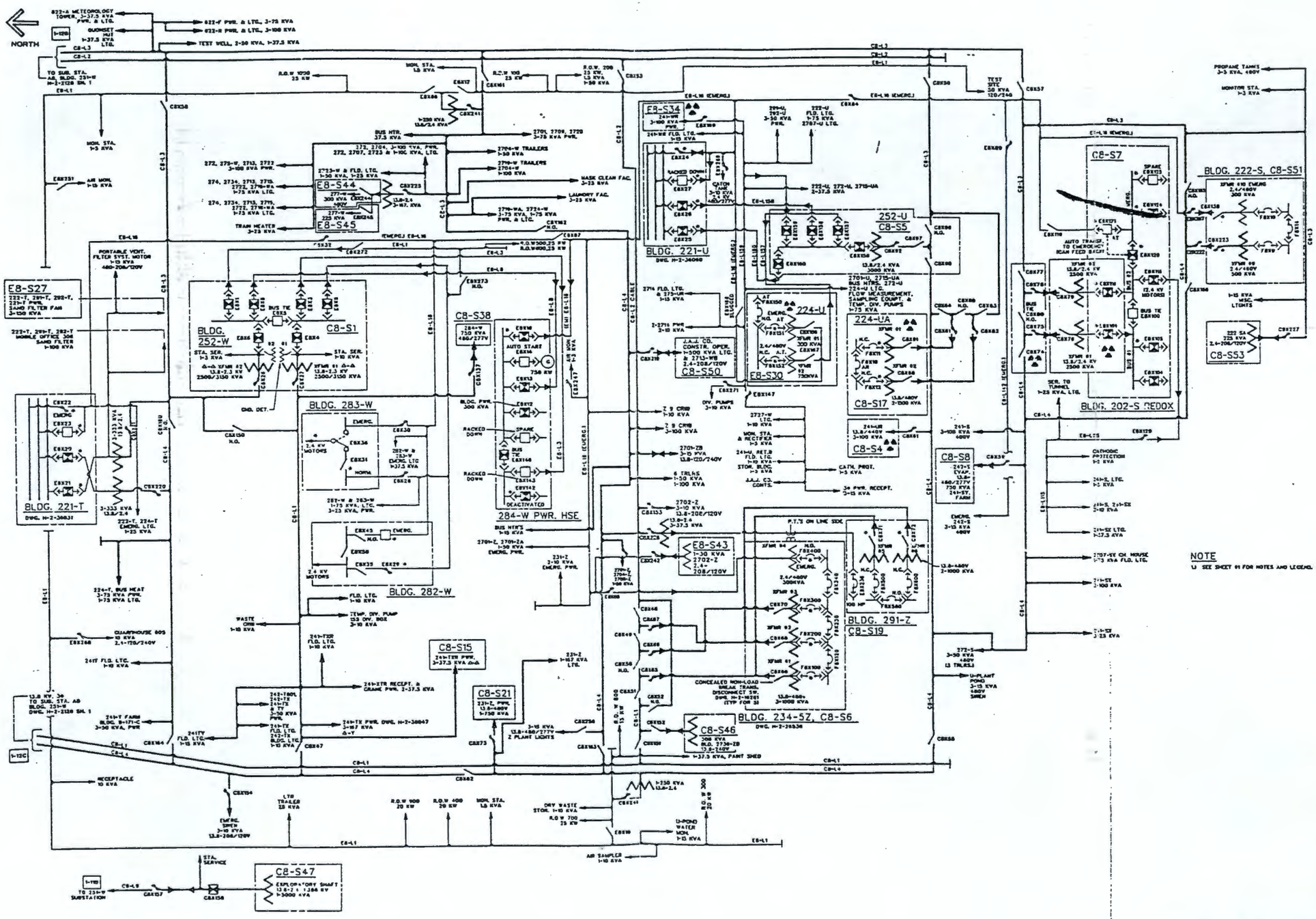


NOTE

1) SEE SHEET 01 FOR NOTES AND LEGEND.

FIGURE 5-66. Electrical Diagram 1. (Sheet 3 of 3)

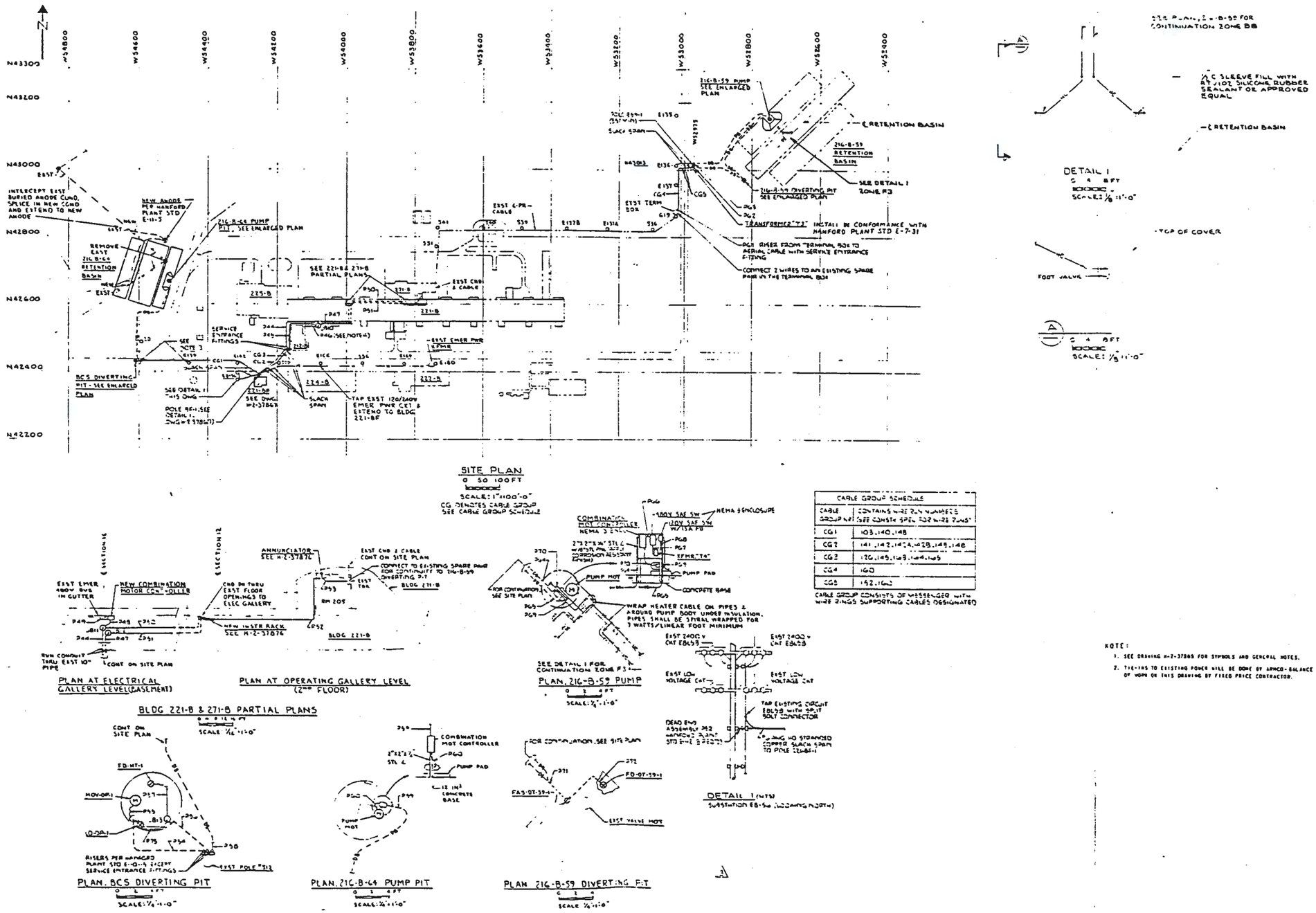


| CABLE GROUP SCHEDULE | |
|---|---|
| CABLE GROUP NO. | CONTAINS WIRE NO. (SEE CONSTR SPEC. 032 WIRE RINGS) |
| CG1 | 103,140,148 |
| CG2 | 141,142,144,148,149,148 |
| CG3 | 126,149,148,144,165 |
| CG4 | 160 |
| CG5 | 152,162 |

CABLE GROUP CONSISTS OF MESSENGER WITH WIRE RINGS SUPPORTING CABLES DESIGNATED

FIGURE 5-67. Electrical Diagram 2.

THIS PAGE LEFT BLANK INTENTIONALLY.

9312899001

THIS PAGE INTENTIONALLY
LEFT BLANK

distributed to motor control centers (MCCs) located in the electrical gallery. The lower voltage transformers feed lighting circuits and various small loads. Tables 5-24 and 5-25 provide a list of equipment supplied from respective MCCs.

5.10.1.2.1 New Upgrades (Ref. 5-45). A substation located immediately north of the 271-B Building (Fig. 5-68) and having two separate sources will be supplied by lines from C8-L6 on Baltimore Avenue and from line C8-L7 at the west end of the 225-B Building. Power for the 221-B Building will be taken from the 13.8 kV lines C8-L6 and C8-L7 (H-2-93734, H-2-93736, H-2-93737).

Pole mounted, 3 pole, gang-operated load break switches, used as main disconnects from the two normal supply lines, will be mounted on a dead end structure, with connections to the unit substation via underground concrete encased ducts.

The substation will be a weatherproof, double-ended unit substation, consisting of two 1,500 kVA transformers, metal enclosed medium voltage load interrupter switchgear, and metal enclosed low-voltage drawout switchgear. The transformers will be separated by a minimum distance of 25 ft. Fused load interrupter switches will also be used as primary disconnects to the two 1,500 kVA transformers. The unit substation will have the capability of being expanded from both ends for additional 13.8 kV feeders for future loads. The low-voltage switchgear will consist of metal enclosed, 600 V switchgear with two 3-phase, 2,500 amp buses, each having a main incoming circuit breaker and fed from the respective 1,500 kVA transformers. A bus tie circuit breaker between these two sets of main buses will be included. The two main breakers and the bus tie will be electrically operated and interlocked. Under normal operation each bus will be fed from its respective 1,500 kVA transformer. If either transformer or its source should fail, voltage sensing relays will automatically open the breaker and close the tie breaker so that both busses are fed from the remaining supply. An interlock will prevent a closed position for the two main breakers and the bus tie at the same time. This will forestall paralleling of the two 1,500 kVA transformers. The secondaries of the 1,500 kVA transformers will be 480Y/277 V, 3 phase, 60 Hz with the neutral solidly grounded.

The low voltage main, tie breakers and feeder breakers in the unit substation will be drawout, insulated case circuit breakers with solid state trip devices. All circuit breakers will be equipped with auxiliary contacts for use with future position annuniciation system. The unit substation will be approximately 40 ft long by 10-ft deep by 10-ft high, mounted on a 44-ft by 14-ft concrete pad with an approved ground grid. Suitable drainage and collection will be provided around the concrete pad for potential transformer ruptures and oil spills. Vehicular barriers will be provided for protection of pad-mounted equipment.

TABLE 5-24. Equipment Pieces Fed by Feeder L-58 (H-2-60502).

| MCC #3 | MCC #4 | MCC #12 | MCC #13A |
|---|---|---|---|
| Carrier Units<br><br>Vent Fans<br>Dumbwaiter<br>Shelter Lights<br>Supply Fans SF-1<br>Extra | P-12-2 Spray Pump<br><br>P-13-2 Spray Pump<br>A-5-1<br>P-5-1A<br>276-B Equipment<br>A-7-2<br>Cell 4 Vacuum pump | Instrument Air Refrigerated Dryer<br>Carrier Units<br>Vent Fans | 211-B Pumps not in 7A |
| **MCC #13** | **MCC #14** | **MCC #14A** | **MCC #15A** |
| P-BCP-1 (221-BB)<br>Exhaust Fan (221-BB)<br>A-26-2<br>Carrier Units<br>A-26-1<br>P-26-1<br>A-25-1<br>P-25-1<br>A-25-2<br>P-26-3<br>A-26-1A Gallery<br>A-26-2A Gallery | A-28-3<br>Vent Fans<br>A-27-3<br>P-28-3<br>P-27-3 | Pulser 27-1 | Pulser 28-1<br>Pulser 29-1<br>Pulser 30-1<br>P-30-3<br>A-27-2<br>PA-27-4<br>P-28-1F Gallery<br>P-29-1F Gallery<br>P-28-2<br>A-28-1F Gallery<br>A-28-2<br>A-28-3C Gallery<br>PA-28-4<br>Worthington Air Compressor<br>2300 Volt Disconnect: #1 Joy Compressor |

9312892003

THIS PAGE LEFT BLANK INTENTIONALLY.

9312899004

THIS PAGE INTENTIONALLY
LEFT BLANK

TABLE 5-25. Equipment Pieces Fed by Feeder L-53 (H-2-60502).
(Sheet 1 of 2)

| MCC #6 | MCC #7A | MCC #7 | MCC #8 |
|---|---|---|---|
| Centrifuge (G-12-2)<br>Vent Fans<br>A-11-1<br>A7-1<br>A-11-2 | A-13-1<br><br>A-8-1<br>A-8-2<br>A-1-6<br>A-6-2<br>P-13-1<br>P-12-2C Gallery<br>A-12-2B Gallery<br>A-12-2C Gallery<br>Demineralizer Equipment<br>211-8 Pumps:<br>PCE-10<br>PCNB-7<br>PCNB-7A<br>PST-15<br>PST-16<br>A-9-1<br>A-9-2<br>A-12-1 | Vent Fans<br><br>A-14-1<br>A-14-2<br>Centrifuge G-13-2<br><br><br>A-14-2A Gallery<br>A-16-2A Gallery<br>A-13-2A | A-16-1<br><br>Vent Fans<br>A-17-1<br>A-17-2<br>A-15-2<br>A-13-1A Gallery |
| **MCC #9** | **MCC #10** | **MCC #11** | **MCC #13C** |
| A-18-1<br>P-18-1<br>Vent Fans<br>A-18-3C Gallery<br>P-18-3C Gallery<br>Shop Sump Pump<br>PA-18-3 | A-19-1-2<br>Vent Fans<br>A-20-1P-19-1<br>A-19-1-1 | P-24-1<br>P-21-1-1<br>P-21-1-2<br>A-21-1-1<br>A-21-1-2<br>A-24-1-1<br>A-24-1-2<br>PA-32-1<br>P-20-1A Gallery | All AMU Equipment<br>Buffalo Unit |
| **MCC #15** | **MCC #16** | **MCC #17** | **MCC #18** |
| P-32-2C Gallery<br>A-29-3<br>Carrier Units<br>A-30-3<br>P-29-3<br>A-30-2<br>A-29-2 | Centrifuge G-32-2<br>Vent Fans<br>A-31-1<br>A-32-2<br>A-31-3 | A-32-1<br>Vent Equipment<br>A-32-2C Gallery<br>A-31-1F Gallery<br>A-33-1-2<br>A-33-1-1<br>A-34-1<br>A-34-2<br>A-34-3 | A-37-1<br>A-37-2<br>A-37-3<br>Vent Equipment |

TABLE 5-25. Equipment Pieces Fed by Feeder L-53 (H-2-60502). (Sheet 2 of 2)

| MCC #18A | MCC #19 |
|---|---|
| A-36-1 | A-38-1 |
| A-36-2 | Vent Equipment |
| PA-36-3 | A-38-2 |
| A-36-1A Gallery | A-38-3 |
| A-36-3A Gallery | P-38-1 |
| A-35-1 | P-38-4 |
| A-35-2 | P-38-A Gallery |
| A-35-1A Gallery | A-38-A Gallery |
| PCS-1 Gallery | A-39-1 |
| | A-39-2 |
| | A-39-4 |
| | A-39-5 |
| | A-39-A Gallery |
| | P-39-A Gallery |
| | 2,300 V Disconnect: |
| | #2 Joy Compressor |

NOTE: (Will update table H-2-92743, 4 Sheets).

| SAG CHART FOR 2/0 A.C.S.R. | | | | | |
|---|---|---|---|---|---|
| TEMP °F | SPAN FT. 100 | 150 | 200 | 220 | TENSION LBS. |
| | SAG IN. | | | | |
| 30 | 7 | 8 | 9 | 17 | 767 |
| 60 | 12 | 14 | 16 | 31 | 431 |
| 90 | 19 | 22 | 25 | 47 | 256 |
| 120 | 25 | 29 | 33 | 61 | 217 |

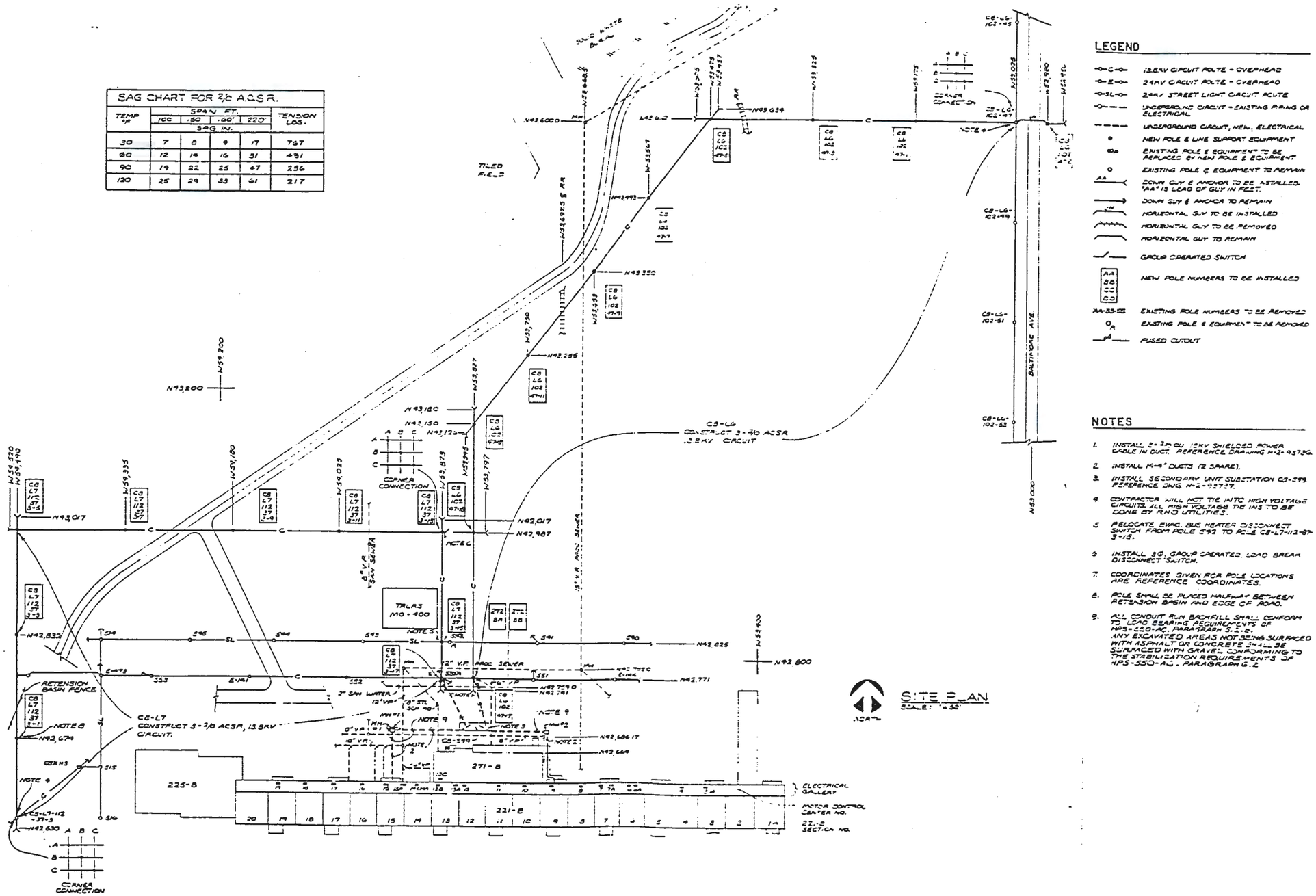


FIGURE 5-68. Electrical Diagram 3.
(Sheet 1 of 2)

THIS PAGE INTENTIONALLY
LEFT BLANK

THIS PAGE LEFT BLANK INTENTIONALLY.

9312892008

THIS PAGE INTENTIONALLY
LEFT BLANK

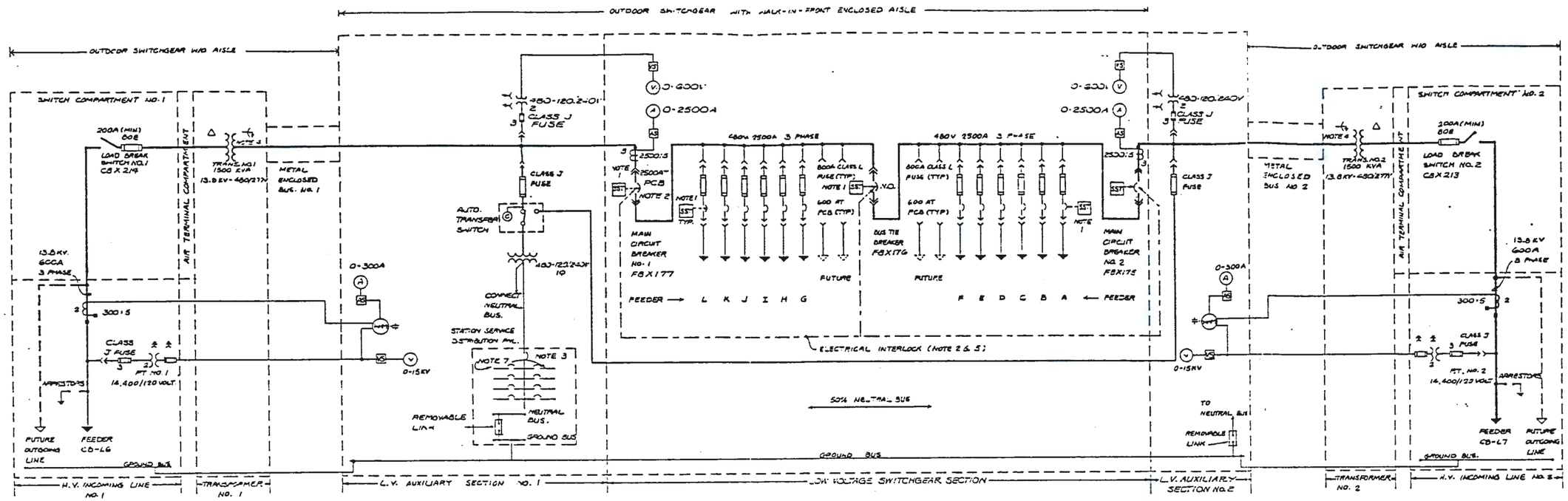


CS-S49 SINGLE LINE DIAGRAM

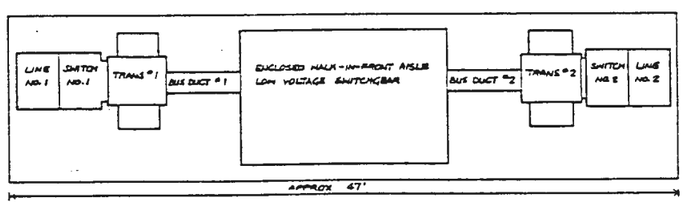


PLAN VIEW CS-S49

SCALE: 1/4" = 1'-0"

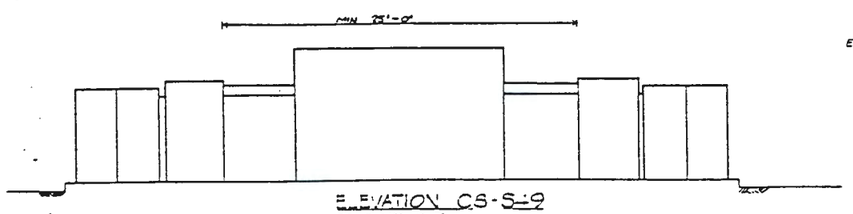


ELEVATION CS-S49

SCALE: 1/4" = 1'-0"

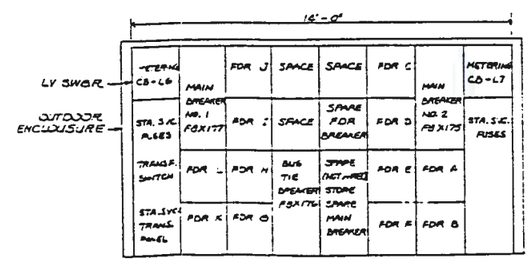


LOW VOLTAGE SWITCHGEAR TYPICAL LAYOUT (NOTE 6)

SCALE: 1/2" = 1'-0"

## NOTES

1. CIRCUIT BREAKERS TO HAVE SOLID STATE TRIP ELEMENTS. ONE SPARE MAIN BREAKER AND ONE SPARE FEEDER BREAKER SHALL BE PROVIDED.
2. BUS TIE BREAKER TO BE NORMALLY OPEN. BUS TIE BREAKER TO CLOSE AUTOMATICALLY AFTER EITHER MAIN CIRCUIT BREAKER OPENS OR ON LOSS OF POWER ON ONE LINE. TIE BREAKER TO BE INTERLOCKED SO THAT TIE BREAKER SHALL OPEN PRIOR TO CLOSING OF BOTH MAIN BREAKERS.
3. FOR BRANCH CIRCUIT REQUIREMENTS, SEE PROCUREMENT SPECIFICATION B-428 P1.
4. DO NOT GROUND NEUTRAL AT TRANSFORMER. THE NEUTRAL BUS SHALL BE CONNECTED TO THE GROUND BUS IN LOW VOLTAGE SWITCHGEAR.
5. AUTOMATIC TRANSFER SWITCH; DELAYED AUTOMATIC RETURN. THROW OVER 1-2 SEC. DELAY. DELAY ON RETURN 5-15 MIN.
6. LAYOUT SHOWN IS AN EXAMPLE OF A FEASIBLE CONFIGURATION. MANUFACTURER MAY PROVIDE AN ALTERNATE LAYOUT IF IT CONFORMS TO SPECIFICATIONS. OPTION A PROVIDES FOR NO SPARE MAIN BREAKER. SPACE SHALL BE PROVIDED FOR STORAGE OF A SPARE MAIN BREAKER.
7. SWITCHGEAR SERVICE POWER FOR SPACE HEATERS, LIGHTS, CONTROL POWER AND RECEPTACLES. (FACTORY WIRED)

## LEGEND

| | |
|---|---|
| (A) | AMMETER |
| AS | AMMETER SWITCH |
| (C) | TRANSFER SWITCH COIL |
| (WH) | WATTHOUR METER W/ PULSE INITIATOR |
| SST | SOLID STATE TRIP DEVICE. |
| (V) | VOLTMETER |
| VS | VOLTMETER SWITCH |
| FDR | FEEDER |
| W/O | WITHOUT |
| PCB | POWER CIRCUIT BREAKER |

FIGURE 5-68. Electrical Diagram 3. (Sheet 2 of 2)

THIS PAGE INTENTIONALLY
LEFT BLANK

THIS PAGE LEFT BLANK INTENTIONALLY.

9312899010

THIS PAGE INTENTIONALLY
LEFT BLANK

The transformers will be non-PCB oil-filled outdoor type, the medium voltage switchgear will be housed in a weatherproof outdoor enclosure, and the low voltage switchgear will be in a "walk-in" weatherproof housing with internal lighting. The low voltage system will be provided with a neutral bus throughout the switchgear. The available short-circuit from lines C8-L6 and C8-L7 is 37.5 MVA at 13.8 kV.

Electrical power (Ref. 5-46) within the 221-B Building will be distributed at 480Y/277 V, 3-phase, 60 Hz. This system will have a solidly grounded neutral. Neutral conductors will be brought into the building with the power conductors from the outdoor unit substation. Power will be distributed throughout the plant by a radial distribution system. The existing motor control center (MCC) will be replaced with new ones (Ref. 5-67). Power to these MCCs will be from conductors in conduit along the length of the electrical gallery with conveniently located junction boxes for connection to the MCCs. Each feeder will be installed in an individual conduit run servicing no more than two MCCs. All conduits will be suitably marked at convenient intervals for identification purposes. All conductors will be copper and insulated with crosslinked polyethylene or silicone rubber.

When electrical outages occur it is imperative that corrective actions be completed as soon as possible to minimize the impact on processing and waste handling activities of B Plant. Clear and rapid status indication and annunciation is required to facilitate appropriate corrective action to electrical system problems.

The annunciation and status (Ref. 5-47) indication system will be installed in the B Plant dispatcher's office, (271-B Building, Room 205) to indicate the position of each major circuit breaker, fused disconnect, or loadbreak switch in the B Plant electrical system. An alarm will provide visible light and audible sound at the annunciation panel to indicate deviation from a normal operating position. The audible alarm may be silenced by the dispatcher. The visible alarm will reset itself when the breaker or switch is returned to is normal position.

An annunciator panel capable for future expansion will provide the alarm display. Auxiliary (dry) contacts on each circuit breaker or switch will provide a position indication signal to the panel. A total of 66 devices will be annunciated. Table 5-26 shows normal power devices and Table 5-27 shows emergency power devices that are to be annunciated. The new annunciator panel will operate on 120 V AC circuit.

TABLE 5-26. Normal Power (13.8 kV Source) Devices.

| No. of devices | Description |
|---|---|
| 2 | Power availability (C8-L6 and C8-L7). |
| 2 | Primary (H.V.) loadbreak switches (in 13.8 kV substation). |
| 2 | Secondary (L.V.) main breakers (in 13.8 kV substation). |
| 1 | L.V. tie breaker (in 13.8 kV substation). |
| 12 | L.V. feeder breakers "A" through "L" (in 13.8 kV substation). |
| 21 | Motor control center (MCC) main breakers (in electrical gallery). |
| 4 | Primary feeders breakers for lighting transformers T1, T2, T3, T4 (in electrical gallery). |
| 4 | Secondary feeder breakers for lighting transformers T1, T2, T3, T4 (in electrical gallery). |
| 4 | Automatic transfer switches (in electrical gallery). |
| 2 | Air compressors transformer 13.8 kV to 2.4 kV. |

TABLE 5-27. Emergency Power (2,400 V Source) Devices.

| No. of devices | Description |
|---|---|
| 1 | Power availability. |
| 1 | Secondary (L.V.) feeder breaker. |
| 1 | Emergency distribution panel main breaker. |
| 4 | Secondary (L.V.) feeder breakers (in emergency distribution panel). |
| 4 | Existing automatic transfer switches (2 in electrical gallery, 1 in Section 5 and 1 in Section 15. |

9 3 1 2 8 9 9 2 0 1 2

5.10.1.2.2 Motor Control Center Upgrade (Ref. 5-67). The existing MCCs in Buildings 221-B and 271-B will be replaced with MCCs that provide adequate short circuit ratings, improved overload protection, greater spare capacity, and improved maintainability. Whenever possible, new MCCs will be located and installed in the same location as the removed unit.

The new MCCs will be prefabricated to industry standards with individual motor controller or circuit breaker units. MCCs will be NEMA 12 construction with full gasketing.

MCCs will be rated 600 Volt ac, three-phase, 4 wire. Buses will be braced for 42,000 RMS symmetrical amperes. Horizontal and vertical buses will be copper, rated 600 amperes and 300 A respectively. A copper neutral bus and copper ground bus will be provided.

The circuit breakers will have at least the same fault current rating as the buses.

Auxiliary alarm contacts will be provided with the main breaker for each MCC.

Power factor capacitors shall be provided for all motor starters for 25 HP or larger induction motors.

Motor controllers for use in the new MCCs will be provided with three overload relays. The overload relays will provide protection for each phase of the power conductors in conformance with the NEC.

Circuit breakers will be used for all power circuits; fuses will be used for control circuits. Adjustable static trips will be used on all circuit breakers rated over 100 amperes. Any needed test and adjustment devices (including calibration curves) shall be provided for these trips.

The new MCCs will be effectively grounded by using a bonding jumper that connects the MCCs to the building ground grid.

5.10.1.2.3 Lighting Distribution System (Ref. 5-48). Four single-phase 480-120/240 V, 100 kVA transformers will be provided for lighting. These transformers will be dry-type in sealed enclosures fed individually by circuit breakers. New 42 circuit lighting panels will be provided and fed by automatic transfer switches (H-2-93750) so that, if one of the 100 kVA transfers fails, the associated lighting panels will be automatically fed from another 100 kVA transformers until power is restored to the failed circuit upon which the transfer switch will automatically transfer the loads back to the normal supply.

5.10.1.2.4 Circuit Breakers (Ref. 5-48). All load center main circuit breakers, all emergency system circuit breakers (main and branch), and all transfer switches will be equipped with auxiliary contacts for use with the future position annunciation system.

5.10.1.3 750 kVA Generator Emergency Backup. The emergency 2,400 V line, E8-L66, is fed from a breaker at the 284 power house. In the event of a power failure on the emergency line, an emergency 750 kVA steam driven generator automatically takes over the load on the emergency line. Since this line is shared throughout 200 East Area, allocation of the various operating equipment which may be automatically switched over to the emergency line, E8-L66 has been prearranged and properly authorized.

This emergency feeder, E8-L66, is involved in an operations test every Monday at 0900 when the load is switched to the emergency generator. When this happens, the equipment units whose power is being supplied directly from E8-L66 on a continuous basis may give an alarm response due to a temporary change in the voltage.

5.10.1.3.1 New Emergency System (Ref. 5-48). A new emergency system compatible with the new 480 V grounded wye power system will be installed to supply B Plant emergency loads. The new system will tap into the existing 2,400 V overhead emergency line at pole E-181, located on the south side of the 221-B Building. The 2,400 V circuit will run up the south wall of 221-B, over the roof, and down the north wall to a 300 kVA, 2,400 V-480 Y pad-mounted transformer installed at ground level on the north side of the 221-B Building. An externally mounted circuit breaker will be installed on the secondary side of the transformer (H-2-93744).

A new emergency distribution panel will be installed in the electrical gallery. Feeders from the panel will supply:

- The existing West End Emergency Cable Bus via an existing automatic transfer switch
- Power for the regulated voltage to the dispatcher's panel board. This includes the following units:

  All 16 units on the red colored panel alarm

  Stack activity alarm

  Relay switch to the 15 in. sewer diverter valve motor starter
- A new East End Emergency MCC (MCC 6A) via an existing automatic transfer switch
- Two new 480-120/240 V single-phase transformers
- Continuous air monitor (CAM) panel board CAM-B via an existing automatic transfer switch and transformer.

5.10.1.4 Portable Battery-Powered Lights. There are portable battery-powered lights strategically located throughout the building and plugged into the lighting circuits. Upon failure of power, these lights are energized by the battery. They are routinely serviced to retain them in operating condition for use during emergency conditions. They are not borrowed or removed for any other purpose.



9312899201 4

5.10.1.5 Safety Consideration and Controls. In the event of a power outage on both the normal feeders, the following equipment automatically will switch to the emergency feeder, E8-L66:

- Instrument air compressor
- Fifteen in. cooling water diverter valve and monitoring system (but not the alarm in dispatcher's office)
- Agitator/pump TK-22-1
- Emergency lighting circuits, including the canyon and craneway exit lights. The 110 V lamps for this lighting are changed quarterly and not used except in a power failure.

It is possible for the crane to operate off the emergency feeder but this switch must be made manually. In addition, due to the size of the breaker in this installation, the amount of equipment on the crane which can be operated at the same time will have to be limited. It should be possible to operate the lighting, air supply monitoring instruments, and perhaps the motor for one motion.

The following units are supplied directly from the E8-L66 emergency feeder.

- Power for the stack activity monitoring system in 292-B is supplied directly and continuously from the E8-L66 emergency feeder through a pole transformer nearby.
- Power for the canyon door lock solenoids on the dispatcher's desk is supplied directly from the emergency feeder continuously.

The following equipment is supplied directly from E8-L66 emergency feeder continuously only because of manual switching arrangements made in the electrical gallery.

- Power for the regulated voltage to all panel boards. This includes the power supply to operating and pipe gallery radiation monitors.

  Fifteen-inch sewer monitor and instrumentation

  Twenty-four inch sewer monitor and instrumentation

  The 221-BB condensate pit monitor and instrumentation

  The F-22-9 filter monitor and instrumentation

  The E-20-2 tube bundle monitor and instrumentation

  The E-23-3 tube bundle monitor and instrumentation

  The E-23-3 condensate monitor and instrumentation.

5.10.1.5.1 Important Monitoring Systems Without Emergency Power. The power for several essential monitoring systems is supplied by the normal feeder lines, either L-53 or L-58, and is not backed up by the emergency L-66 line.

These systems and the respective feeder line supplying the power are as follows:

| Monitoring System | Lines Supplying Power |
|---|---|
| Cooling Water Subheader Drains | L-58 |
| E-5-2 Steam Condensate (including power to diverter valve to TK-24-1) | L-58 |
| Steam Condensate header (114) | L-58 |
| BCS Sampler and Monitor in 221-BB | L-58 |
| BCP Sampler and Monitor in 221-BB | L-58 |
| Canyon Air Sampling and Monitoring | |
| Cell 8 | L-58 |
| Cell 21 | L-58 |
| Cell 37 | L-53 |
| Alarms in Dispatcher's Office | L-53, L-58 |
| Operating and Pipe Gallery Air Sampling and Monitoring | L-53, L-58 |
| Alarms in Dispatcher's Office | L-53 |
| Monitors in 212-B | L-58 |

5.10.1.5.2 Reliability of Main Distributor Feeders (Ref. 5-49). The potential for a multi-disability of B Plant protections systems is considered remote with the exception of the potential for a pole line structure failure from lightning or other impact.

Listed in Table 5-28 are the unscheduled outages between January 1, 1960, and July 21, 1984, (with duration and cause) on the normal 2,400 V feeders E8-L53 and E8-L58 to the 221-B Building.

The average time to restore the power after these outages is (292/32) = 9.13 min. Electrical distribution personnel can always be called from their homes to the job within 45 min if switching loads or other work is required.

The "mean time between failures" (MTBF) for the period of January 1960 to August 1984 is

MTBF = (8760 h/yr x 24.0 yr)/32 = 6,570 h

TABLE 5-28. Unscheduled Electrical Outages.*

| Date | Time | Duration | Feeder | Cause |
|---|---|---|---|---|
| 07-12-60 | 10:13 a.m. | 4 minutes | E8-L53 | Switching error |
| 03-21-61 | 12:07 p.m. | Momentary | E8-L58 | Operating error |
| 05-25-61 | 6:49 p.m. | 44 minutes | E8-L53, E8-L58 | Lightning |
| 08-22-61 | 3:54 p.m. | 1 minute | E8-L53 | Lightning |
| 08-22-61 | 3:54 p.m. | 17 minutes | E8-L58 | Lightning |
| 02-08-65 | 1:03 p.m. | 8 minutes | E8-L53 | High wind |
| 02-08-65 | 2:01 p.m. | 6 minutes | E8-L58 | High wind |
| 01-01-66 | 11:04 p.m. | 20 minutes | E8-L58 | High wind |
| 06-10-66 | 11:27 a.m. | Momentary | E8-L53, E8-L58 | Lightning |
| 08-17-67 | 8:41 a.m. | 6 minutes | E8-L53, E8-L58 | Overload |
| 08-04-74 | 10:40 a.m. | 1 minutes | E8-L58 | Unknown |
| 10-28-74 | 2:13 a.m. | 30 minutes | E8-L8 | Pole fire |
| 11-05-74 | 11:00 p.m. | 30 minutes | E8-L8 | Pole fire |
| 02-07-75 | 10:51 a.m. | 1 minutes | E8-L8 | Arrestor failure |
| 03-01-74 | 1:52 a.m. | 9 minutes | #1 Trans. at A-8 | Insulator failure |
| 06-31-75 | 11:00 a.m. | 1 minute | C8-L8 | Bird damage |
| 03-24-76 | 9:18 a.m. | 4 minute | C8-53 | Personnel |
| 11-02-76 | 12:07 p.m. | 1 minute | 200 E & W | Personnel |
| 04-01-77 | 10:38 a.m. | 2 minutes | C8-L8 | Faulty switch |
| 07-26-77 | 4:20 a.m. | 1 minute | 200 E & W | Faulty relay |
| 01-13-78 | 8:58 a.m. | 1 minute | #2 Trans. at A-8 | Personnel, insulator |
| 04-17-79 | 4:24 a.m. | 30 minutes | #1 Trans. at A-8 | Insulator failure |
| 02-09-80 | 10:28 a.m. | 1 minute | Midway #1 line | Carrier fault and maloperation |
| 12-05-80 | 3:33 p.m. | 7 minutes | #1 Trans. at A-8 | Unknown |
| 07-06-83 | 12:36 p.m. | 1 minute | #1 Trans. at A-8 | Lightning fire |
| 10-27-83 | 11:55 a.m. | 30 minutes | C8-L8 | Crane interference |
| 02-03-84 | 7:57 a.m. | 1 minute | C8-L7 | Circulating currents by single pole switching |
| 02-08-84 | 7:45 a.m. | 30 minutes | C8-L8 | Switching |
| 04-10-84 | 2:09 p.m. | 1 minute | C8-L7 | Line contractor error due to weather |
| 05-16-84 | 1:49 p.m. | 1 minute | C8-L7 | Vehicle accident |
| 06-28-84 | 11:47 p.m. | Momentary | C8-L6 | Lightning strike |
| 07-21-84 | 8:44 a.m. | 3 minutes | C8-L7 | Switch identification at 2750E |

*Personal communication, September 26, 1984, 1984 Electrical Outages Affecting B Plant Complex," R. T. Cochran to S. Singh, Rockwell International, Richland, WA.

The probability that the system will be available to perform its function is estimated to be

$$[8760 \text{ h/yr} \times 24.0 \text{ yr} - (292/60 \text{ h})]/(8{,}760 \text{ h/yr} \times 24 \times 100) = 99.998\%$$

5.10.1.5.3 Power Loss of One of the "Normal" Feeders. In the event of a power loss on either of the 2,400-V feeders, L-53 and L-58, provisions have been made at the 2,400-V switchgear, section 12 electrical gallery, to automatically transfer the load of the failed feeder to the feeder that is still energized. This transfer will be accompanied by a 10 to 15 s loss of power to the equipment supplied by the failed feeder, and this equipment will have to be restarted. Either line should be able to carry the entire B Plant load.

In addition to the indicators on the breakers, an indicator light system in the dispatcher's office monitors the breakers as to their open or closed position. There are no provisions for automatic restoration of power to the feeder. Restoration is accomplished manually by an electrician. The system is returned to normal as indicated by the volt meter on the breaker. Some equipment will have to restarted due to momentary loss of power.

5.10.1.5.4 Power Supply to Exhaust Fans. Power for the electric exhaust fans, lighting, and instrumentation at 291-B is supplied directly from the C8-L6 feeder through a transformer station in 291-B area. No emergency power supply backup is provided for this line. Other equipment in 291-BB, 291-BD, and turbine house which will be out of service as a result of the C8-L6 feeder outage is as follows:

- Instrument control panels including:

  Recorder chart drives

  Alarm signals to dispatcher's office

  Turbine running lights in dispatcher's office

  Fan bearing temperature monitor

  Filter dew point indicator, and canyon exhaust relative humidity recorder located on 221-B Cell 2 panel board

- Lighting, except for emergency battery lights where provided

- Space heaters and power for portable heaters in the valve pits.

5.10.1.5.5 Loss of Power to Emergency Well Houses and Cask Station. Power to 282-B and 282-BA emergency well pump houses and 212-B Cask Station are supplied directly from the C8-L7 feeder through transformer station C8-S6, west of 224-B Building. No emergency power supply backup is provided for this line.

5.10.1.5.6 Emergency Well Pumps (282-B and 282-BA). If the power failure is on normal feeder C8-L7 line, there will be no power for the 282-B and 282-BA emergency well houses. The cooling water for both diesel engines is kept preheated for ease in starting by auxiliary electrical heaters.

A power loss on line C8-L7 will not affect the cranking and starting circuits of the diesel engines as they use power from 24 V batteries.

5.10.1.7.7 Cask Station (212-B). All equipment in 212-B will be without power except for emergency battery lights where provided.

If 212-B Cask Station is being operated the status of personnel is determined and appropriate action is determined by supervision. Radiation Monitoring is notified and portable radiation detection instruments are substituted. All maintenance and operation work is stopped and continuation of work proceeds only under proper planning and authorization by supervision. All transfers of liquid between Cell 35 and 212-B are terminated. The cask cell will continue to be under a negative pressure created by its connection to the 221-B canyon wind tunnel if the exhaust fans are operating.

5.10.2 Steam Supply System (Fig. 5-69, 5-70, 5-71)

Steam used in B Plant is produced in the 284-E power house by three 80,000 lb/h and two 90,000 lb/h automatic stoker fired boilers at 250 lb/in.$^2$. Under maximum steam demand conditions, one boiler is available on a standby basis. The coal feeder drive is equipped with both electric and steam drives. The boiler feed water is monitored and sounds an alarm in the event of low water pressure. A manually operated emergency water supply system is available to prevent boiler tube damage. Steam produced in this building is also available to operate an automatic starting, steam turbine driven, 750 kW generator located in the 284-E power house.

5.10.2.1 Major Components and Operating Characteristics. The 284-E power house supplies superheated (250 lb/in.$^2$ gage at 450°F) steam to a 12-in. over-ground line. The 12 in. line divides into two lines, the 10 in. heading west and the 6 in. heading east. The 10 in. line continues around the west end of B Plant and is reduced to an 8 in. line which enters 221-B in the vicinity of Cell 37 on the electrical gallery level. High pressure steam (225 lb/min$^2$ gauge, 450°F) to the process stack area 291-B, the 222-B Building, and the 224-B Building is supplied by branches from the 10 in. line.

There are two pressure reducing valve (PRV) stations located near Cells 29 and 15. High pressure steam is reduced to medium pressure (100 psig) steam at these pressure reducing valve stations. Steam at 100 lb/in.$^2$ gage is used for process transfer jets and is supplied to 271-B Building and the 211-B tank farm through an 8 in. line which leaves the pipe gallery in the vicinity of Cell 20.

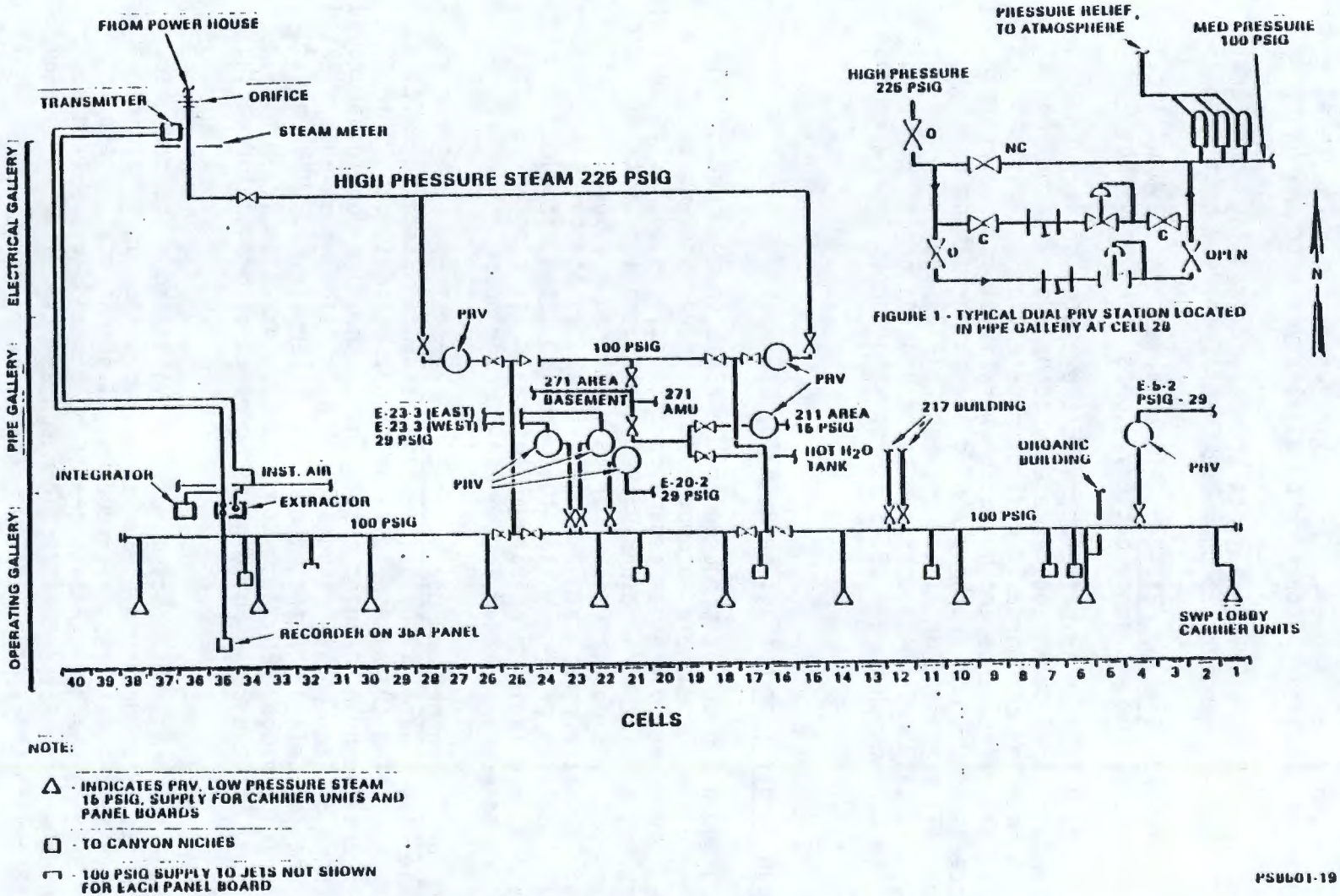


FIGURE 1 - TYPICAL DUAL PRV STATION LOCATED IN PIPE GALLERY AT CELL 28

FIGURE 5-69. Basic Steam Supply System, 221-B Building.

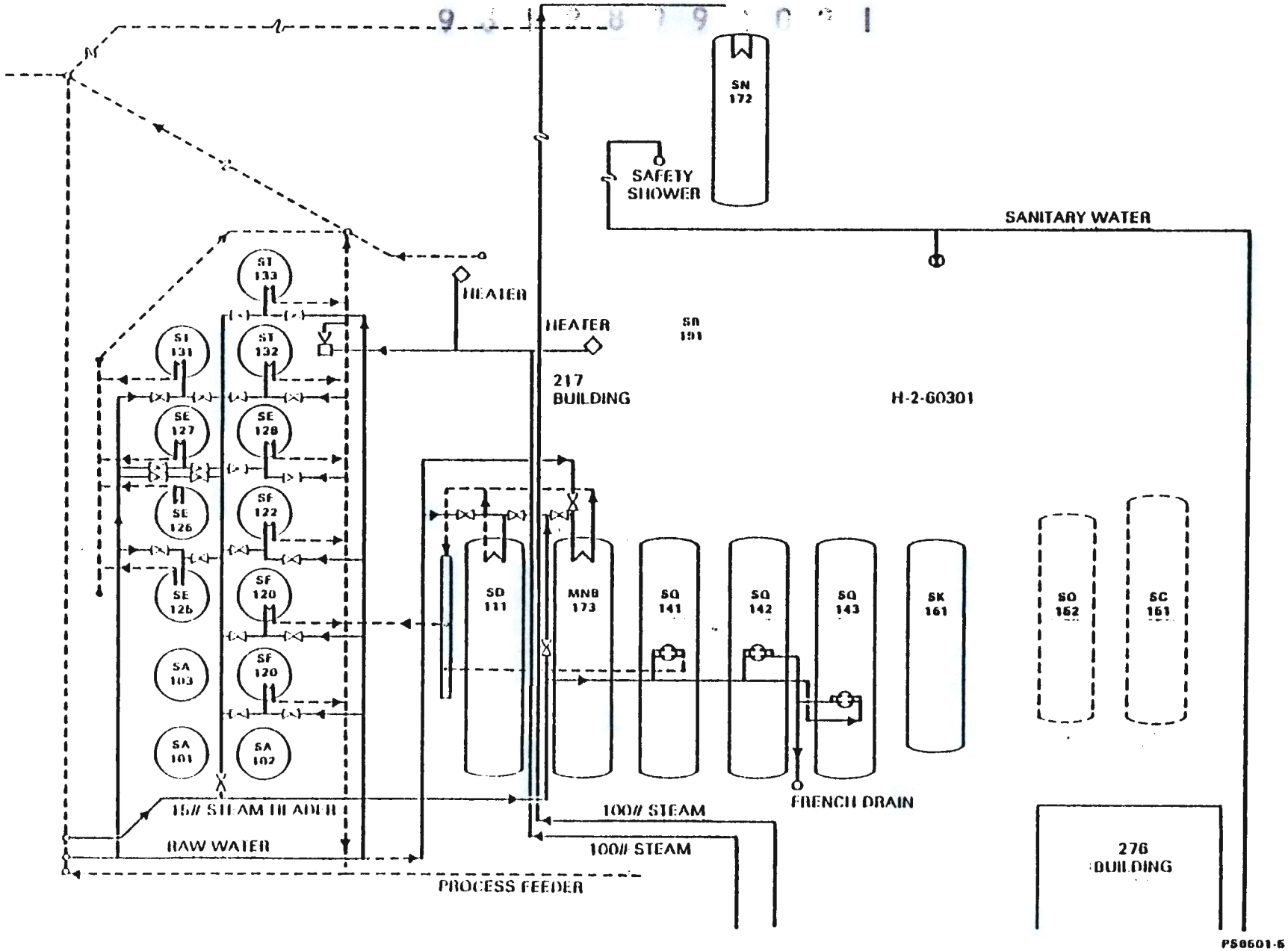


FIGURE 5-70. The 211-B Steam and Water Headers.

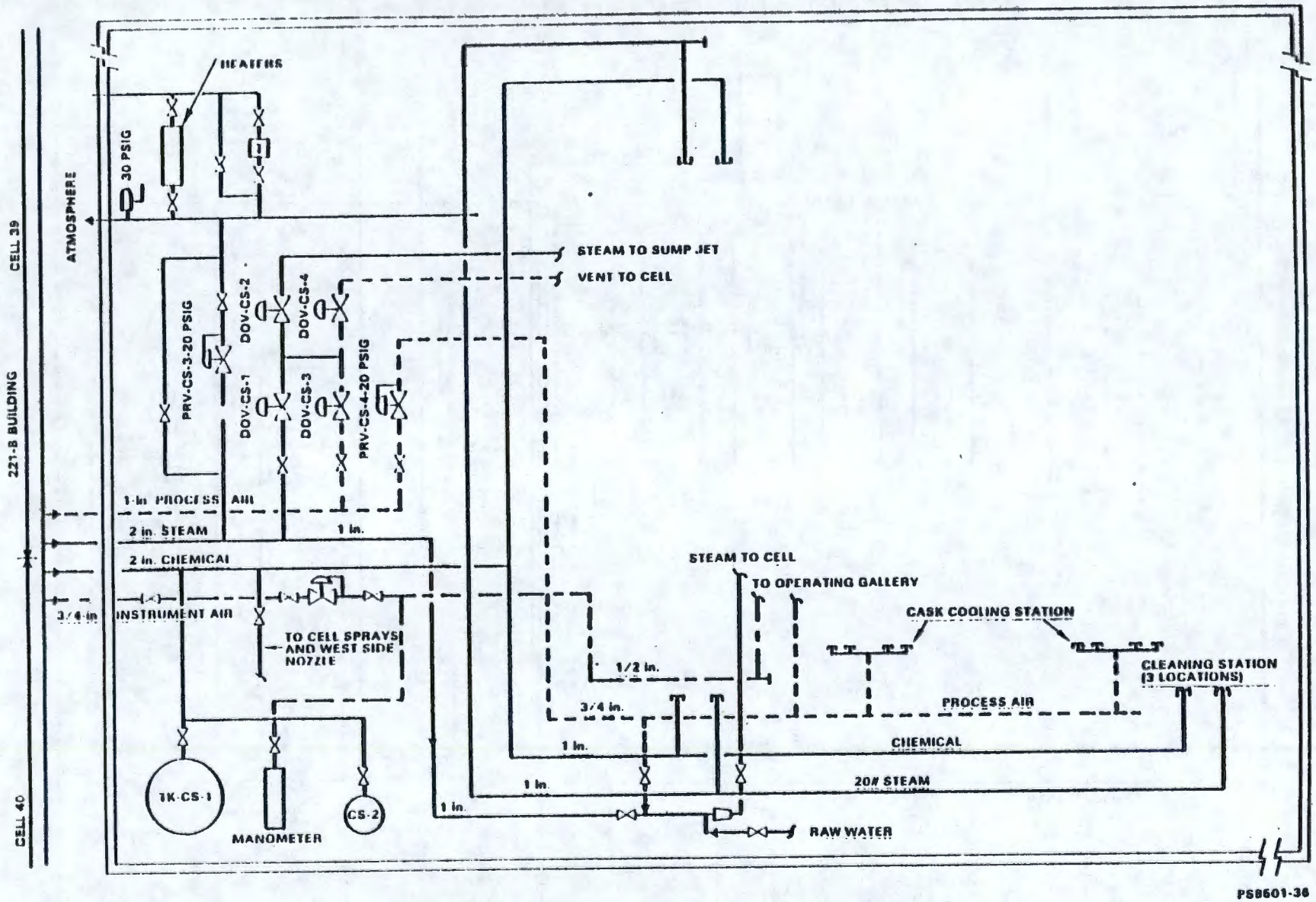


FIGURE 5-71. The 212-B Building Steam, Chemical Process, Air and Instrument Air Lines.

Medium pressure steam is reduced to low-pressure steam (29 psig or 15 psig) by individual pressure reducing valves for the building heating system, process vessel heating coils and jackets, and concentrators in Cells 5 and 23.

Isolation valves are installed throughout the steam distribution header system for system isolation with minimum process shut down during periods of header maintenance.

5.10.2.2 Safety Considerations and Controls (Ref. 5-50). The supply of steam by the power house in the 200 East Area is normally very reliable. Two or three boilers are routinely in service but during periods of low consumption of steam, one boiler is in service while one is on standby. The loss of an in-service boiler will require a need for temporary curtailment of some process operations.

5.10.2.2.1 Loss of Steam. A complete loss of steam to B Plant could be caused by trouble at the power house or rupture of the steam supply by corrosion, vehicle collision, tornado, or earthquake. This would require all processes and equipment to be placed on standby status until such time as the steam service is restored.

During steam outage, the vessel vent jets are switched to air if the automatic system has not already functioned. The vent systems are shut down only after the air temperature to the filter has dropped to 120°F.

5.10.3 Water Supply System

The Columbia River provides the source of water for the needs of the Hanford Site. Present water usage at the Hanford Site is 500 million gal per month. The water needs are met by pumping river water at 100-B area through an underground export water piping into the 200 East Area.

Two alternate pumping sources, located at 100-B and 100-D reactors, feed the export water pipelines, and provide a redundant system as long as the export water pipeline remains intact.

5.10.3.1 Primary Water Source (100-B Reactor Area). There are eight electric pumps at the rated capacity of 10,500 gal/min per pump located at the 181-B Pumphouse. These pumps, with a total pumping capacity of 84,000 gal/min, deliver water to a 25 million-gal reservoir. The 182-B pumphouse, with five pumps rated at 6,000 gal/min per pump, pump water from the reservoir into the underground export water pipeline.

5.10.3.2 Reserve Water Source (100-D Reactor Area). There are five electric pumps, rated at 13,000 gal/min per pump, located at 181-D pumphouse. These pumps, with a total capacity of 65,000 gal/min, supply water to a 15 million-gal reservoir. The 182-D pumphouse, with two pumps rated at 2,000 gal/min per pump, delivers water to the export water pipeline.

5.10.3.3 Emergency Water Supply. Two diesel pumps rated at 1,500 gal/min/pump and located in 182-B Pumphouse and one diesel pump rated at 7,500 gal/min and located in the 181-B pumpline serves as emergency system in the event of loss of electrical power to both the electrical pumping units located at 100-B and 100-D reactor sites. The pumps at the 100-D reactor area are the normal backup system with the emergency diesel pumps as the second backup system.

The water from both the 100-B and 100-D reactor sites is pumped through 42 in. concrete export water lines which meet in the 1901Y Area. The water supply at this juncture divides into two 30 in. lines, one of steel and the other concrete, and proceeds to the 2901Y Area. Necessary water is allocated between the 200 Areas through two 24-in. lines to 282-E Area and one 24 in. line to the 200 West Area. These water transport lines are provided with valves that can be used to isolate pumphouses/reservoirs and/or pipelines ensuring a source of water to the various locations.

The main water system is connected to two 3 million-gallon reservoirs, one in 200 East Area and one in 200 West Area. From the area reservoirs, water enters either the process water system as raw water or the sanitary water system after filtering, chlorination, and testing. To meet emergency situations, area pump houses are provided with steam driven backup pumps in addition to electrically driven primary pumps.

5.10.3.4 Water Distribution within the 200 East Area (Fig. 5-72). The primary water storage facility in the 200 East Area is the 3 million-gallon 282-E reservoir. From this reservoir water is pumped as 'raw water' by four electric pumps with a capacity of 6,000 gal/min per pump. There is a steam driven pump of the same capacity (6,000 gal/min) on standby.

5.10.3.5 Sanitary Water System (Fig. 5-73, 5-74). Sanitary water is produced in the 283-E filter plant, which filters and chlorinates raw water and maintains a 400,000 gal supply in an underground clear well system containing two 200,000 gal concrete tanks. The water is then pumped by four electric pumps of 3,200 gal/min total capacity, and 2 steam turbine pumps (standby status) with a 1,200 gal/min total capacity.

Sanitary water is used in the waste fractionization facility for safety showers, operating area wash down, drinking, toilet facilities, making demineralized water for process use and as an emergency backup for fire fighting. Included in the system is a 50,000 gal high tank located south west of the building to assure continued availability of water under pressure. B Plant sanitary water requirements typically average 60 gal/min. Approximately 90% is used for process and operations purposes and 10% for non-operational (drinking, toilet, etc.) purposes. The sanitary water enters the building at the west end through an 8-in. headend valve (47-S) and the header extends along the length of the building.

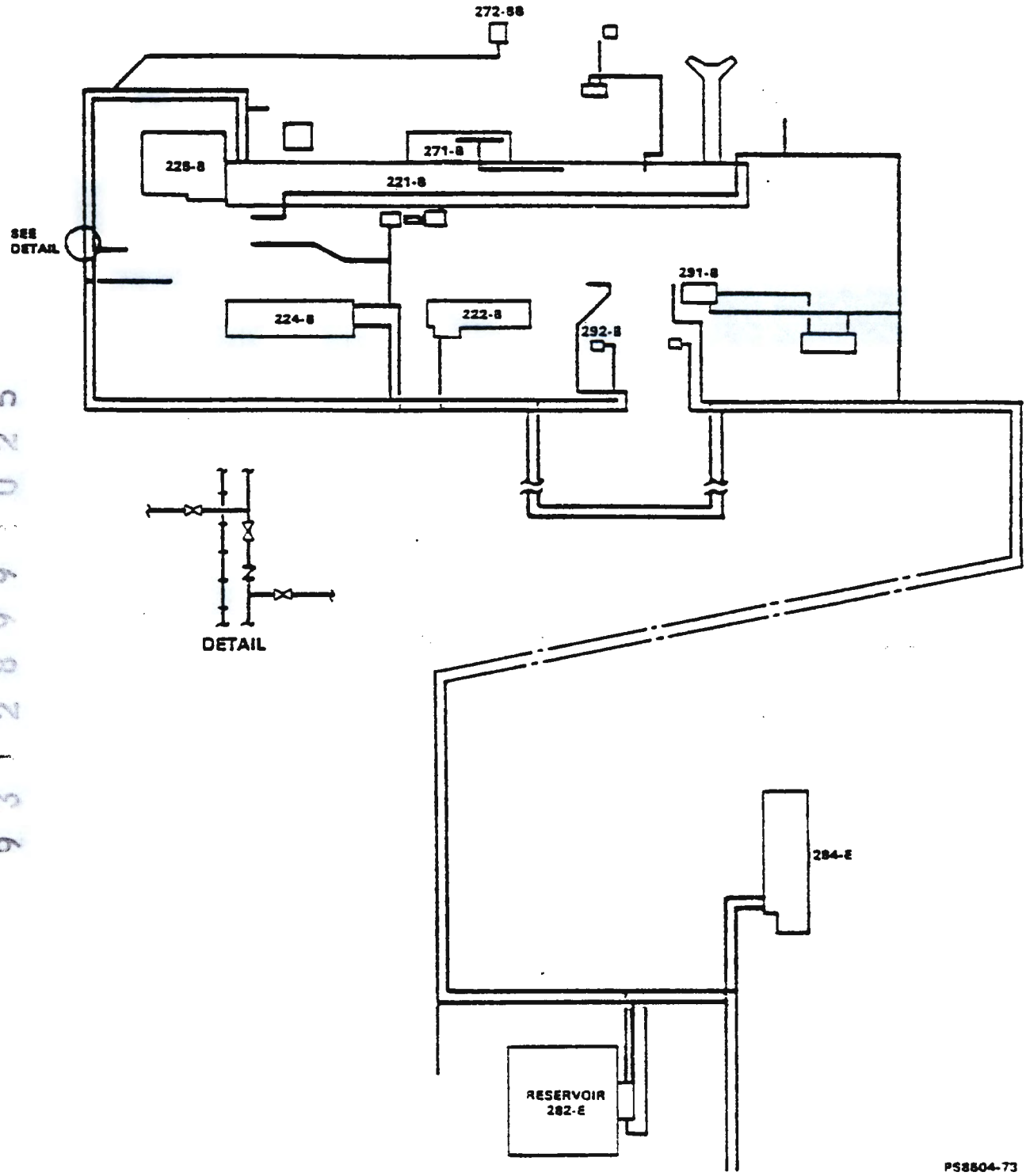


FIGURE 5-72. Raw and Sanitary Water Distribution to B Plant.

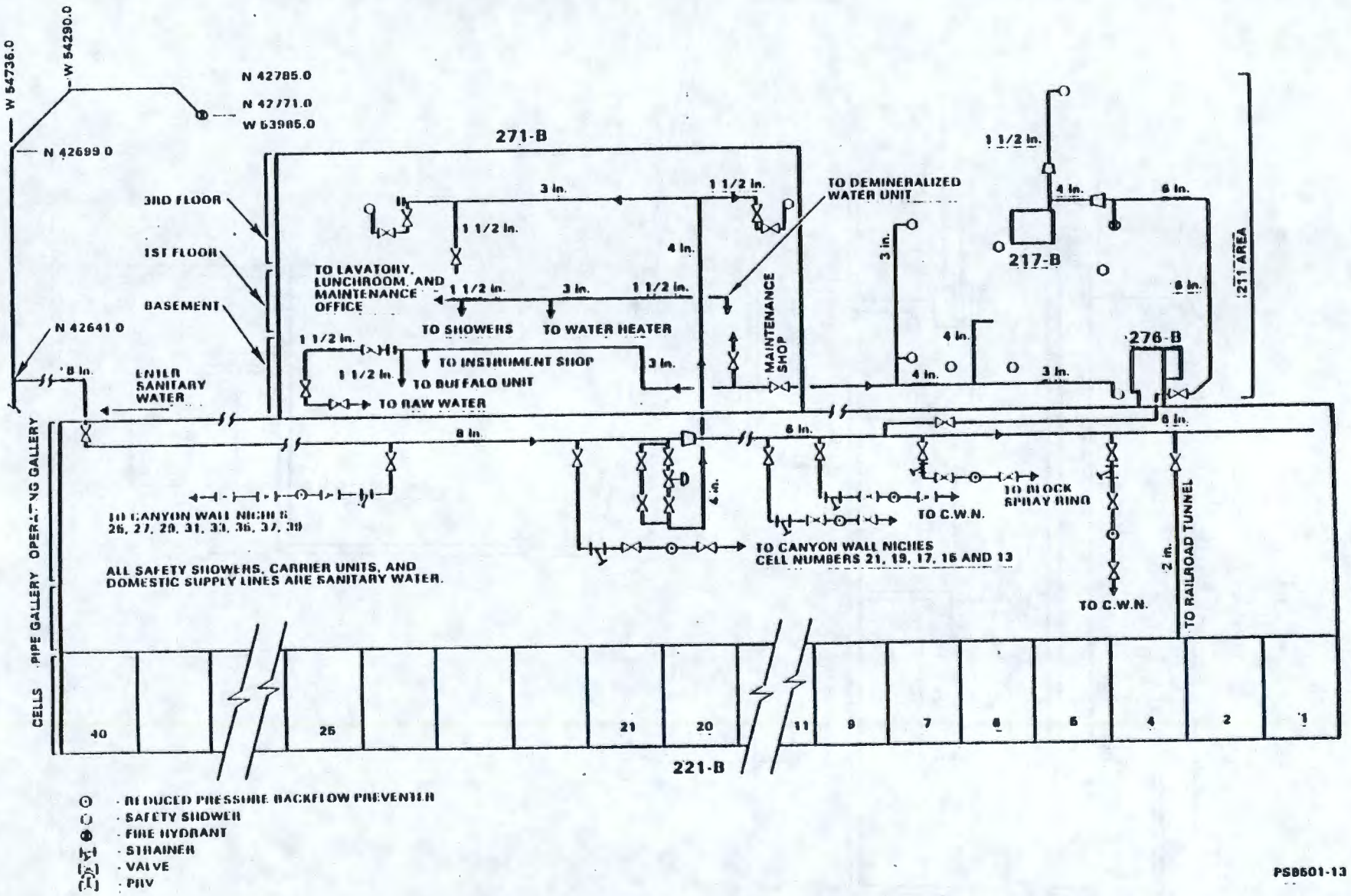


FIGURE 5-73. Sanitary Water System.

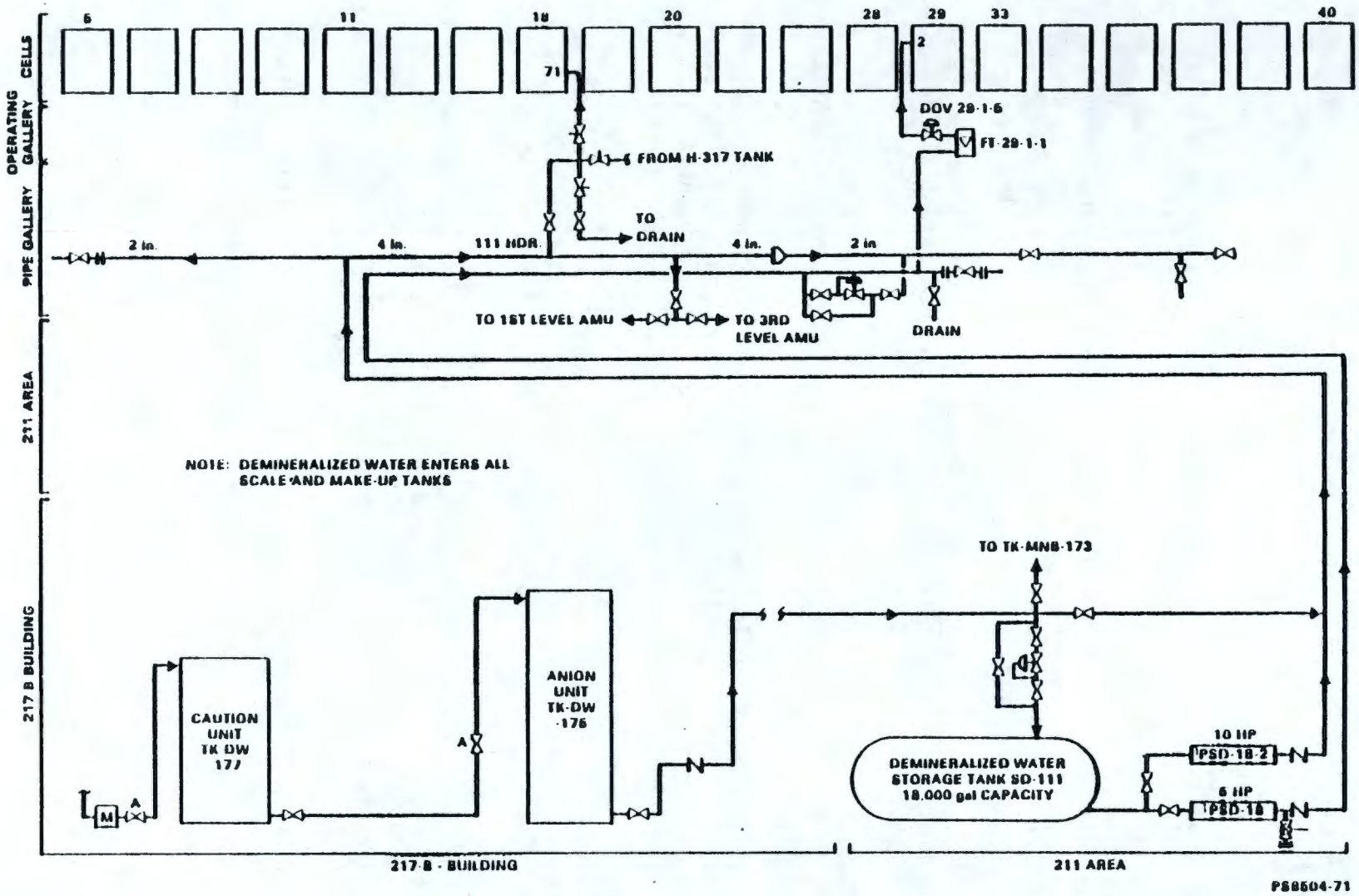


FIGURE 5-74. Demineralized Water Flow and 111 Header System.

5.10.3.6 Raw Water System (Fig. 5-72, 5-75, 5-76). Raw water is used at B Plant as a heat transfer fluid in cooling coils for process and storage tanks, condensers for concentrators, air compressors, and diesel engines. Raw water is also used for sprays, filter seals and fire protection.

The raw water for 221-B enters the building at both the east and west ends via 10 in. tube headers (Ref. 5-49). The approximate flow rate from the 282-E reservoir is 5,000 to 7,000 gal/min. The pressure at both the east and west ends of the 221-B operating gallery, is approximately 100 psig. From the 10 in. header exit 2 in. and 3 in. lines that serve each cell within the 221-B canyon. The lines, with orifices to reduce the flow rates, have from 1 to 3 control valves at each designated panel board to adjust the flow to a tank cooling coil or appropriate condenser. Raw water discharging from either 221-B or 225-B enters the cooling water drain system via either one of two header systems, a 24 in. line or a 15 in. line.

5.10.3.6.1 Low Potential. The 24 in. cooling water line receives discharges from those vessels is considered to have low potential for possible contact with radioactive solutions.

5.10.3.6.2 High Potential. The 15 in. cooling water line receives discharges primarily from tank cooling coils that have a high concentration of radioactive solution.

Radiation monitors are located on each subheader and each header. Test risers on each of the cell cooling-water exit lines permit radiation surveys via portable instrumentation. The radiation monitors are maintained in a mode of maximum sensitivity to detect leaks rather than measure them.

Signals from the monitor are received in the dispatcher's office in 271-B where a radiation meter, strip chart and audible alarm are located. The linear rate meter, whose range covers zero to 50,000 cpm, is currently and normally set on the 0 to 500 cpm range with the high alarm set point at 400 cpm.

5.10.3.7 Emergency Pumps (Ref. 5-50). Two diesel driven backup emergency well pumps identified as #1 (282-B) and #2 (282-BA), are located west of 225-B at wells 299-E28-11 and 299-E28-15, respectively. In the event of loss of raw water supply to B Plant, these pumps will be utilized to supply a minimum volume of raw water essential for process tank cooling.

Well 299-E28-11 has an 8 in. casing drilled from an initial elevation of 701 ft to a depth of 347 ft and was completed in 1962. The average volume discharged during the 4-h test interval performed every two months is approximately 220 gal/min.

Well 299-E28-15 has a 12-in.-dia. casing and was drilled to a depth of 350 ft from an initial elevation of 701 ft. Actual depth to the water is 295 ft. The well was completed in 1968 and during the 4-h test interval performed every two months delivers 600 to 700 gal/min. Each well is sampled once each quarter for Total Beta (TB), Total Alpha (TA), $^{137}Cs$ and $NO_3$.

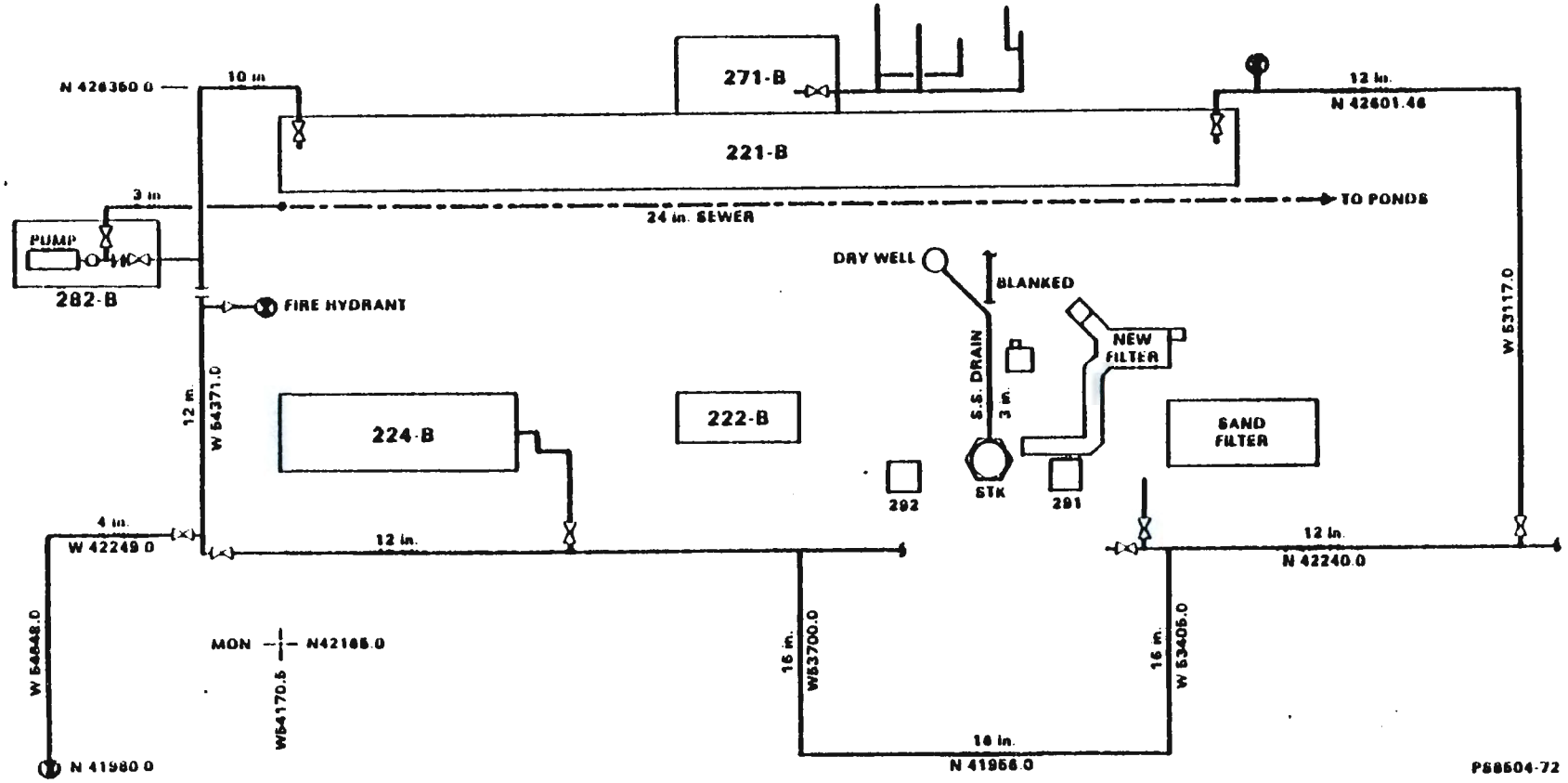


FIGURE 5-75. Raw Water Systems in the 221-B Area.

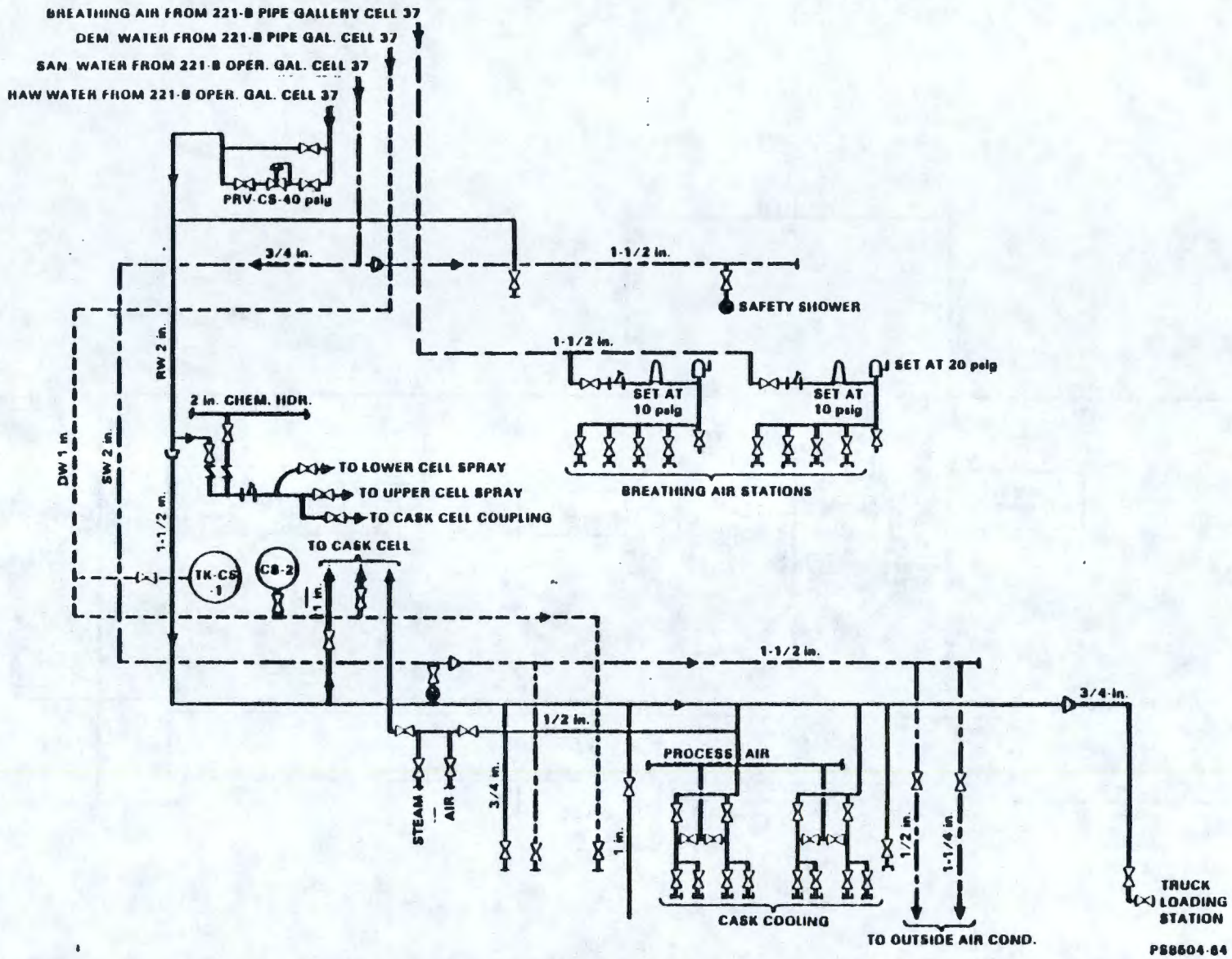


FIGURE 5-76. The 212-B Building Sanitary Demineralizer and Raw Water Line.

5.10.3.8 Emergency Raw Water Test - 1974 (Ref. 5-51). The adequacy of the emergency well pumps to supply water to 221-B and 225-B plants when normal raw water supply is interrupted was tested on March 14, 1974. The rated output of the well pumps, 282-B and 282-BA are 200 gal/min and 800 gal/min, respectively. Recent tests of the pumps conducted every other month for each well indicate the flow rates to be slightly lower (175 gal/min for 282-B and 730 gal/min for 282-BA).

5.10.3.9 Safety Consideration and Control (Ref. 5-50). Loss of cooling water supply to the B Plant tank coils can be caused by a break in the 12 in. line supplying B Plant from the 200 East Area raw water supply system resulting from deterioration of the line or some violent physical shock, e.g., earthquake.

Upon extended loss of cooling, process solutions containing sufficient quantities of radioisotopes will heat up to the boiling point and evaporate to dryness. The resulting dry salts will continue to heat up to a temperature such that local hot spots could cause vaporization of certain radioactive compounds. These vapors could be condensed and solidified by the lower temperature of the surrounding environment resulting in the formation of an aerosol dispersed in the canyon ventilation air. This air is filtered before release to the environs.

The probable effect of loss of cooling water supply to B Plant would not involve the release of radioactivity to the environment. This determination is based on the following conclusions.

- There are two backup, cooling water supply sources for emergency use if the raw water supply fails. The probability of losing the primary and both backup systems simultaneously is considered remote.

- The length of time between loss of water and temperature excursions could result in environmental release is a minimum of one and one half days which is sufficient to permit restoration of water supply or implementation of emergency procedures.

- Even with the total loss of all cooling water supply the incident can be kept under control as discussed in the following paragraph:

  For the "hottest" solutions handled in the plant, which can reach the boiling point, an additional 33 h would be required to evaporate the solution to dryness under adiabatic conditions. Thus a minimum of one and one half days are available to restore the cooling water supply. In the event that the supply cannot be restored, water can be trucked to B Plant and added to process vessels to prevent the contents from boiling to dryness. Makeup water would be required at the rate of about 15,000 gal/day based on projected plant inventories. This quantity of water could be trucked from the river with available equipment under emergency conditions. The condition of boiling in many of the process tanks results in pressurization of the process vent system and vessels.

At the projected tank inventory levels pressures could approach the 5 psig design pressure of the tanks. These tanks would be ruptured, and although a serious plant contamination problem could occur, significant release to the environment would not take place.

### 5.10.4 Compressed Air Systems

There are three completely separate compressed air systems (process, instrument, and breathing) at B Plant. These systems are categorically discussed in the following section.

- Process air system (Ref. 5-52)--this system supplies requirements for air jets, jet-air-blow system, process coil purging, air sparger systems, air-operated tools, etc. It is also used as a final backup for the instrument air system.

- Instrument air system (Ref. 5-54)--this system is used for pneumatic signal transmission, for purge air in instrumentation, for air motor controls on ventilation equipment, and for specialized calibration requirements.

- Breathing air system (Ref. 5-59)--this system air is suitable for respiration using supplied air respiratory protection.

5.10.4.1 Process Air System (Fig. 5-77). Two rotary screw type single stage heavy duty compressors located in the 271-B basement provide compressed air for process use. Each compressor is capable of delivering 1,240 scfm of air at 110 psig within a 10 psi differential. These compressors are driven by 250 hp, 2,300 V induction motors.

During normal operation only one of these compressors is used. In addition, a diesel driven compressor located outside the 271-B Building in the vicinity of the air tanks is available on automatic standby.

There is a common air intake manifold with a filter that serves both the rotary compressors. Compressed air flows through one of the two after coolers and oil separators into two 4-ft-OD by 12-ft receiver tanks. The process air then flows through a 12-in. line to the main header that runs the length of the operating gallery. Numerous subheaders and feeders branch out from the main header.

Process air is used as a backup for the steam supply to the exhaust jets on the two vessel vent systems which are provided to contain and decontaminate the process off gases prior to discharging to the environment. Process air is used for operating the process solution recirculation jets located in the sampling ports of the canyon deck.

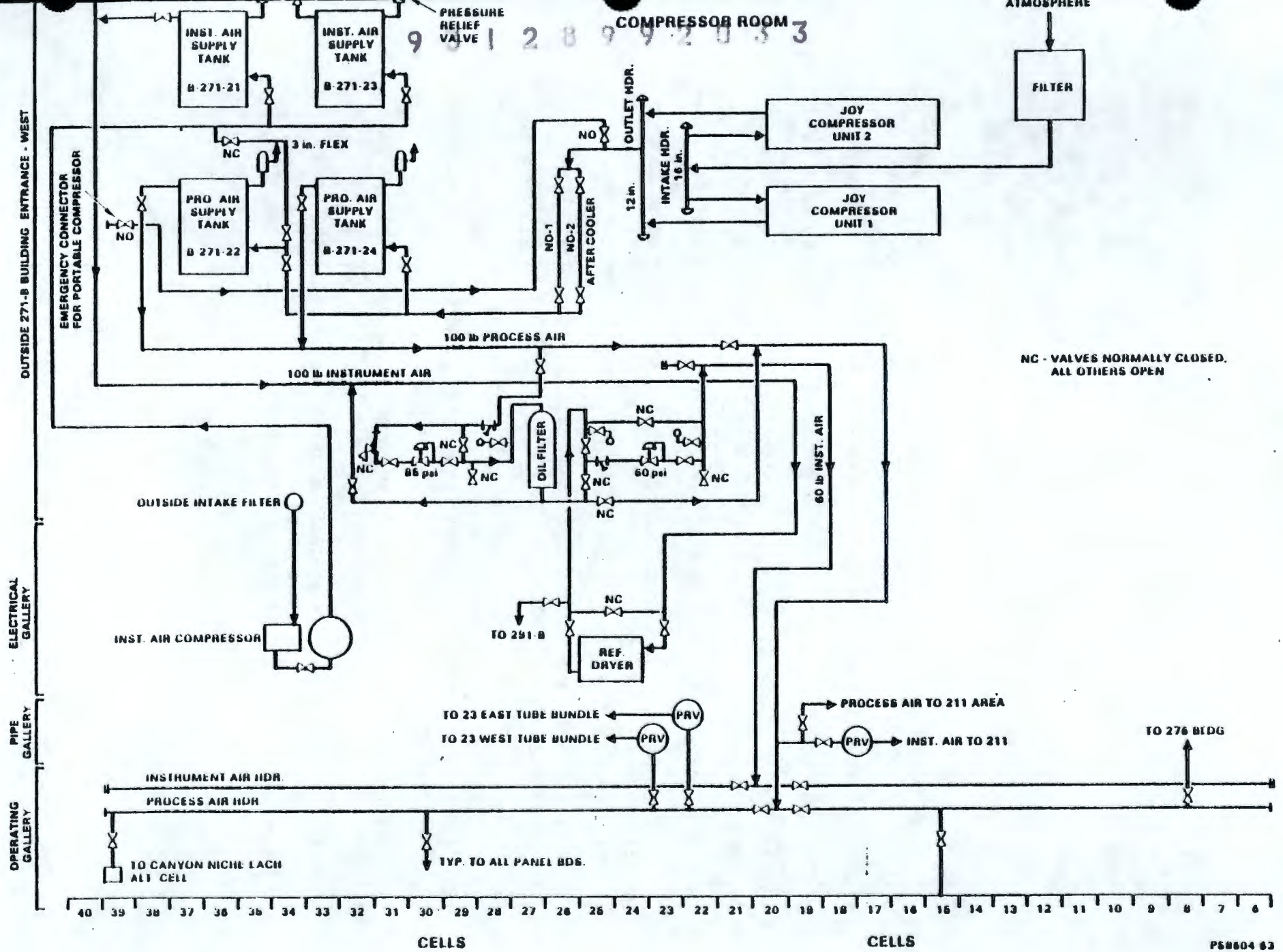


FIGURE 5-77. Flow Diagram of 221-B Process Air System.

5.10.4.2 Instrument Air System (Fig. 5-78). One reciprocating compressor rated at 300 scfm capacity and powered by a 75-hp motor supplies instrument air at 100 psig. The compressor, in the electrical gallery, takes suction through an 8-in. filter located above grade near the stairwell 15 entrance. The air flows through an inside air receiver to the two cylindrical 4-ft dia. by 12 ft tanks located outside of 271-B. The air is passed through a dryer in the electrical gallery and the pressure reduced by two DOVs from 100 psig to 60 psig before flowing to the main header running the length of the operating gallery. Several 0.5 in. lines branch off these main 3 in. headers to service various systems and instruments requiring instrument air.

Instrument air is used for air purging the weight factor and specific gravity dip tubes, for controlling diaphragm operated valves, and for a variety of pneumatic instrumentation including pressure indicators, recorders, recorder controllers, transducers, transmitters, etc.

5.10.4.3 Breathing Air System. The breathing air is supplied by a 7.5 hp two-stage single-acting non-lubricated compressor that does not require installation on a special foundation. This is a compact, self-contained receiver mounted unit, which is automatically regulated and driven by an electric motor. This portable unit, located on the third floor of the 271-B service building in the Aqueous Makeup Area (AMU), is capable of delivering 25 $ft^3$/min at 125 psig. The compressor is equipped with an air purification system rated for pressures up to 300 psi and for flow rates up to 30 scfm. This system meets the requirements of HPS-156-M, Rev. 1. (Ref. 5-68). In the event of an emergency, a portable cascade bottle system can be used.

Air enters the purification system through the mechanical filter/separator where it is expanded, cooled and passed through a coalescer cartridge causing the oil and water vapor to condense and drain to the sump. The remaining oil aerosol, water vapor and other contaminants are removed by the absorbent chemical purifier chambers. The residual oil aerosol water vapor and some of other contaminants are removed as air passes through three purification chambers.

To further remove the gaseous (hydrocarbons, carbon dioxide, ozone, nitrogen, and sulfur) contaminants the air is processed through activated carbon. Carbon monoxide is passed through a catalyst chemical bed to convert it to carbon dioxide which is then removed by activated carbon. Particulate filtration is achieved by a micron filter fitted into each chemical cartridge. The unit is equipped with gauges and carbon monoxide analyzer.

The compressor is on automatic standby in the event of depressurization of the air storage tank. This unit is currently used in the 221-B and 271-B Building.

5.10.4.4 Intertie Between Process and Instrument Air. On low pressure a DOV on the process air intertie line opens to the main instrument air system through an oil separator at full pressure at all times. The breathing air system cannot be intertied to these systems.

GENERAL NOTES

1. SUPPORT PIPING WITH SPLIT RING HANGERS SPACED AT 10 ft
2. COAT DIRECT BURIED PIPE WITH COAL TAR ENAMEL WITH BONDED ASBESTOS FELT WRAP IN ACCORDANCE WITH AWWA C 203 OR "TAPECOAT" COAL TAR TAPE. PAINT AND IDENTIFY PIPING IN ACCORDANCE WITH SPEC. HWS-5311-8
3. FLEXIBLE CONNECTION TO BE ZALLA BROTHERS SELF EQUALIZING EXPANSION JOINTS 150 lb ASA FLANGES STAINLESS STEEL 8 in. - 1 CORRUGATION. 3 in. 2 CORRUGATION OR APPROVED EQUAL.
4. ALL PIPING TO BE M 7 DWG. H-2-31750 SH NO. 7 UNLESS OTHERWISE SPECIFIED.

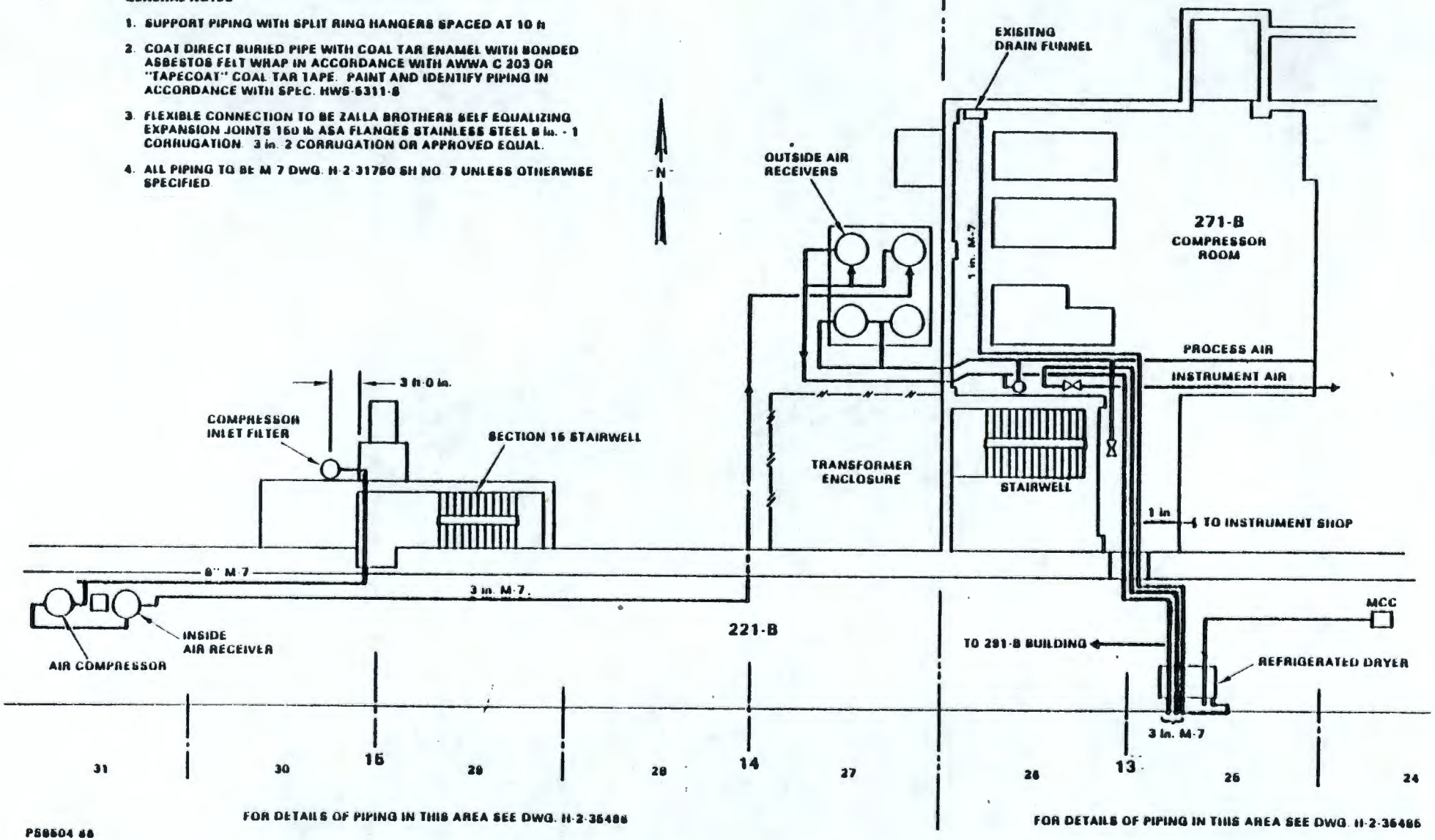


FIGURE 5-78. Instrument Air System Plan.

5.10.4.5 Usage of Process and Instrument Air. Aqueous solutions containing fission products generate hydrogen gas by radiolysis. About 1 to 2 scfm of dilution air is provided per tank to maintain the vessel atmosphere below the lower explosive limit. About 80 scfm is taken from the process air system for this purpose.

Process air is required for purging gang valves and supply lines to the steam jets after usage to prevent their filling with process solution as a result of the vacuum caused by condensed steam.

5.10.4.6 Safety Consideration and Control (Ref. 5-50).

5.10.4.6.1 Complete Loss of Air Supply. The primary ventilation exhaust fan damper settings at 291-B are controlled by pneumatic instrumentation, arrangements are provided for a fail safe condition in the event of loss of instrument air supply. The electric motor driven exhaust fans are stopped and their dampers closed. The emergency steam turbine exhaust fan is automatically started.

Plant design criteria require that all air-operated valves be selected to be left in a safe position in the event of loss of instrument air supply.

5.10.4.6.2 Loss of Process or Instrument Air. Loss of instrument air supply could be caused by a complete electrical power failure, a mechanical breakdown of the compressors, or a break in the distribution lines from the compressed air tank.

In the event of an interruption of electrical power to the instrument air compressor, power can be supplied to the compressor from the 200 East Emergency Steam Turbine via the emergency 2,400 V, power line E8-L66. If a mechanical breakdown or a break in the distribution lines of the instrument air compressor occurs, a cross-tie between the process and instrument air systems will allow the supply of process air to instrument systems. The two process air compressors have a total capacity of approximately 2,480 cfm, which is sufficient to supply both air systems.

During normal operation of the process air compressors, one unit is operational while the other is in standby. The standby unit can replace the operating compressor if a mechanical failure occurs. Additionally, a diesel driven, portable compressor is connected to the process air system and will automatically start if process air pressure decreases below 60 psig.

5.10.5 Fire Protection System (Ref. 5-56 through 5-60)

The fire protection system encompasses fire prevention, detection, annunciation, control, confinement, suppression and extinguishment in addition to administrative procedures.

The fire protection systems of B Plant are described in the following sections. Systems provided include standard wet and dry automatic sprinkler systems, a light water aqueous-film foaming sprinkler system, and a carbon

dioxide system. Smoke detectors, heat detectors, and manual pull boxes are located in appropriate areas of the facility. A proper number of portable fire extinguishers and fire hose stations are located strategically throughout the facility. Fire hydrants are located both north and south of the 221-B Building at a distance of 120 to 130 ft. The Hanford Fire Department which is specifically trained for fighting fires in nuclear processing facilities, responds to a building alarm with appropriate equipment.

5.10.5.1 Causes of Fire. Identified causes of fires at B Plant include:

- Electrical--By failure of equipment or wiring
- Improper Handling--Highly flammable materials such as hydrogen, flammable solvents, etc.
- Thermally Hot Surfaces--Enclosures are provided for heating elements of furnaces, ovens, hotplates, or other heating devices, and high temperature cutoff safety circuits are provided independently of normal controls. By administrative control and safety rules, heat producing devices (e.g., motors, ovens, hotplates, soldering irons, and direct flame devices) must be used and located away from combustible materials
- Spontaneous Ignition--Fires arising from spontaneous combustion of Class A material are not expected to be a significant problem due to the limited quantities of stored fuel or packaged waste (oil soaked rags, sensitized resins).

5.10.5.2 Water Supply for Fire Protection System. The fire protection system at B Plant is supplied by raw water (Fig. 5-79). The header supply pressure will drop due to a raw water pipe failure but the actual pressure in the system will not be released. The audible alarms should not be activated. The fire sprinkler system and the main raw water header pressure are measured at the basement of Section II stairwell. Raw water is also supplied by the emergency diesel pumps. However, activation of the sprinkler system reduces cooling water supply to the process vessel coils. Water supply can be supplemented by the sanitary water system supplied through connections outside the 221-B Building using a fire hose from a nearby fire hydrant. This method will not feed the raw water main header because of check valves in the system.

The fire protection system in 291-BD will be supplied by raw water from the emergency well if the valves 87-R and 88-R are kept open.

5.10.5.2.1 Emergency Sanitary Water. The sanitary water can be used to supplement the output from the emergency well pumps by the use of a gate valve and a male fire hose connection installed on the raw water cell spray subheader in Cell 40 pipe gallery. Prior authorization for use of sanitary water is required from the manager, Fission Products Processing.

This Page Intentionally Left Blank

9 3 1 2 8 9 9 2 0 3 8

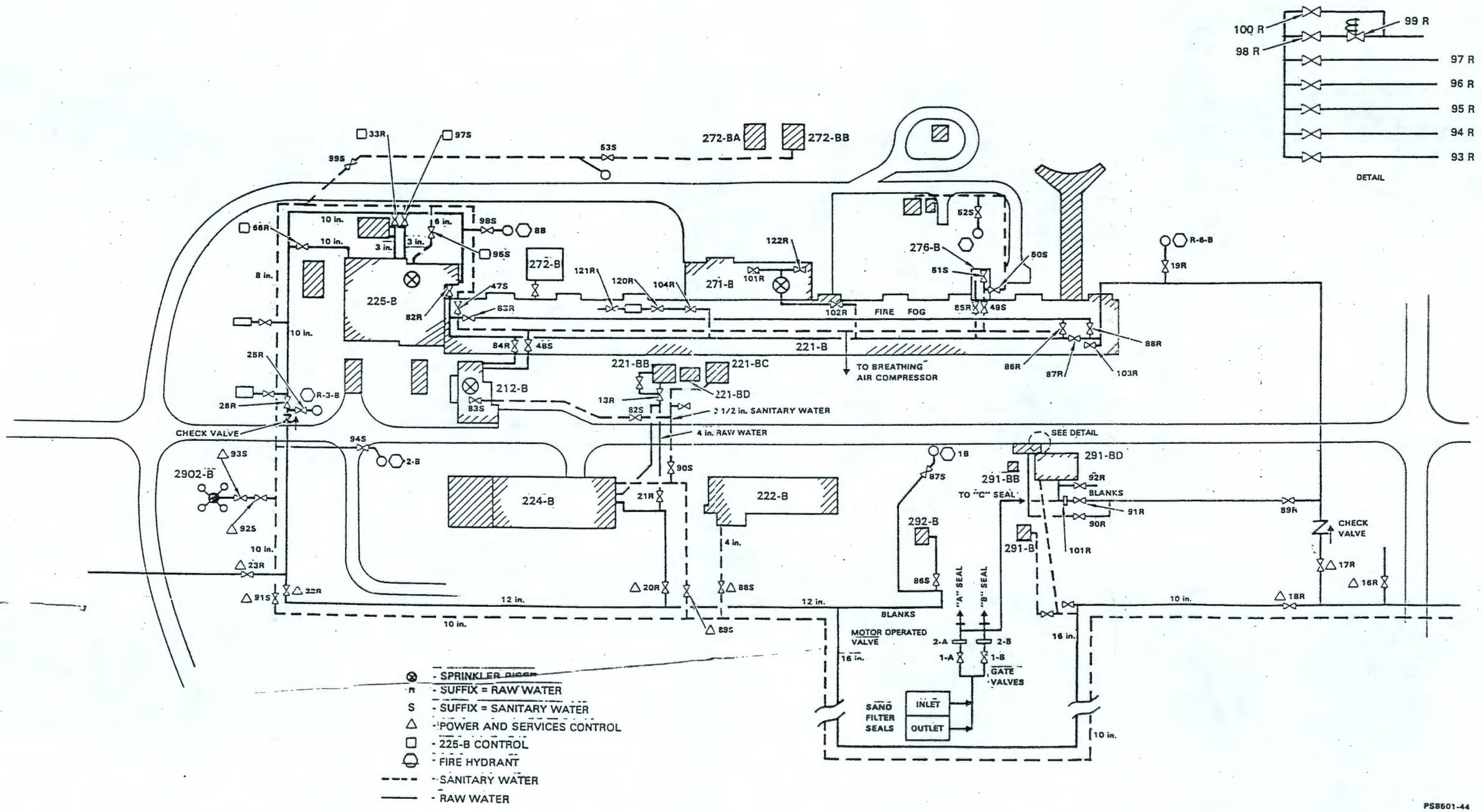


FIGURE 5-79. B Plant Water Lines and Valves.

THIS PAGE INTENTIONALLY
LEFT BLANK

THIS PAGE LEFT BLANK INTENTIONALLY.

THIS PAGE INTENTIONALLY
LEFT BLANK

Admininstrative controls, under Fire Department supervision, are followed to prevent backflow into the sanitary fire hydrant. The Fire Department furnishes the hoses and the pump truck and makes connection to control water flow.

5.10.5.2.2 Fire Hydrants. There are a total of seven fire hydrants, four to the north and three to the south of the 221-B canyon building. Exact location of the fire hydrants and the associated primary, sectional control and isolation valves in either the raw or the sanitary water system are identified in Figure 5-79. The reliable functioning of valves for controlling the fire protection system is essential to the fire protection program and a consistent inspection and test program (Ref. 5-61) is implemented to assure that the valves are functional.

5.10.5.2.3 Coordination with 225-B. Close coordination between operating management of B Plant and WESF is required throughout the raw water failure in order to allocate the approximate 1,000 gal/min water supply from the emergency well pumps. When the B Plant emergency shutdown has progressed to the point that raw water header pressure has increased up to about 40 lb/in.$^2$ range, 225-B management is notified to resume raw water to the pool cell heat exchangers. The flows are manually controlled and held to a minimum but adequate to prevent temperature excursions.

5.10.5.3 Building Features (Ref. 5-62, 5-63). The waste fractionization plant and its auxiliary support facilities structures are divided into three sectors for fire detection with the dispatcher's office serving as the central information and control center. The three sectors are:

- 271-B service building, portions of 221-B canyon structure and auxiliary structures. This sector is divided into seven zones--basement, first floor, second floor, change room facilities at the east end of the operating gallery together with the SWP clothes storage room on the pipe gallery level, 272-B maintenance and 272-BB insulation shop

- 221-B Canyon structure and cells. The panel for the cell fire protection system is located in the pipe gallery at Cell 25

- Exhaust Air Filter Area is divided into three zones. Zone I consists of the 291-B Fan Control Room, 291-BB Exhaust Air instrument house and 291-BD Exhaust Air third filter cell and instrument house. Zone II consists of 221-BD Laundry Storage, 221-BB Process and Steam Condensate, 221-BC Change House. Zone III includes the exhaust tunnel heat detectors and tunnel sprays.

5.10.5.3.1 Fire Detector and Supervisory Control Panel. These "signal red" control panels with a key-lockable door are surface mounted and supplied with the following door-mounted equipment.

- AC Power "ON" indicating lights--white
- Zone Fire Alarm Indicating Lights--red

  The fire alarm activating device actuates the fire alarm common contacts (including notice to the Fire Department), lights the appropriate zone-indicating lamps and closes the normally open alarm contacts to operate the extinguishing system.

- Zone Trouble Indicating Lights--amber

  A signal lights the appropriate zone trouble indicating lamp, closes an auxiliary contact to light the fire alarm control panel trouble-indicating lamp on the supervisory panel, actuates the supervisory common contacts, and sounds an audible alarm at the panel.

- Single Lamp Test Pushbutton.

5.10.5.3.2 Normal Power. The normal power for the fire protection system consists of 120/240 V ac source. The 120 V circuits are designated as primary and supervisory sources. The primary source operates all fire alarm circuits and is supervised precluding false alarm due to loss of normal power.

There is an emergency fire bell alarm system within the 271-B services and parts of 221-B Canyon structure building which is activated by the overhead sprinklers and/or fire alarm pull boxes (Table 5-29). Personnel are alerted of an emergency situation in 271-B by a fast-ringing call bell for a duration of three minutes while the personnel in the canyon are warned by the KLAXON.

5.10.5.3.3 Emergency Power. Three-cell, individual, lead-acid, signal-type units form an emergency source of rechargeable batteries in accordance with NFPA 72B, article 220, and are located near the control panels. The battery assemblies have been sized to operate a system for a minimum of 60 h after loss of charging current and are capable of sustaining a load of 5 A for a minimum of 1 min in addition to the load of the control panel at the end of the period. The batteries are housed in properly vented metal enclosures mounted on the wall.

The battery charger is a completely automatic, solid-state constant-voltage device to carry continuous and intermittent loads up to its rated maximum output. The charger is capable of charging batteries from 75% of full charge to 100% of full charge within 24 h.

9312.8992042

TABLE 5-29. Fire Alarm Pullboxes in 221-B, 271-B, and Other B Plant Area Facilities (Ref. 5-50).

| Building No. | Location |
|---|---|
| 212-B | Inside cask room door, inside control room door, outside east wall |
| 221-B | SWP change room by the exit door to stairwell No. 1 |
| 221-B | SWP clothing storage inside the door |
| 221-BB | Exit from instrumentation room, exit from tank room |
| 221-BC | By exit from SWP area |
| 221-BD | Inside doors |
| 271-B | At door 13 entrance |
| 271-B | Third level at both exit doors |
| 271-B | First level at the four exit doors |
| 271-B | Basement shop area at both exit doors |
| 271-B | Compressor room exit |
| 272-B | Electrical shop near both exits |
| 272-BA | Maintenance storage building near pedestrian and vehicle door |
| 272-BB | Asbestos Shop and Storage exit doors |
| 276-B | Outside (east and west sides of building) |
| 291-BD | Inside exit door, outside of north wall |
| 299-BB | Instrument house, inside exit door |
| 2715-B | On outside of building |

5.10.5.4 221-B Canyon Structure and 271-B Services Building. These buildings have a construction classification of "fire resistive" and an occupancy classification of "special purpose industrial/business."

5.10.5.4.1 271-B Services Building Facility. This building is protected throughout with a wet pipe automatic sprinkler system having a direct alarm to the Hanford Fire Department. The building is also equipped with manual pull boxes located along the common egress routes, whereas, upon activating any one box an audible alarm will sound and an alarm will be transmitted to the Hanford Fire Department. The building has an adequate number and type of portable fire extinguishers located strategically throughout.

The east and west exit stair enclosures are Class B, 1-1/2 h rated and east corridor doors on the first level are Class C, 3/4 h rated, self-closing fire doors and assemblies. All the pipe penetrations in stair enclosures, corridors, and pipe chase floor penetrations are sealed with an approved sealant. Smoke detector actuated dampers annunciate at the fire panel in the first level of the west corridor.

5.10.5.4.2 221-B Canyon Structure Facility. The change rooms located in the pipe and operating galleries at the east end of the facility are protected with a wet pipe automatic sprinkler system having a direct alarm to the Hanford Fire Department. The system also transmits an alarm to the dispatcher's office in 271-B. Cells 10 and 26 through 30 contain organic solvents. These cells are protected with a light water, aqueous film forming foam, automatic (or manual) fire suppression system.

There are eight doors and stairwells on the north side of the building proper and doors through 271-B into the pipe gallery, operating gallery, and the basement. There are 21 doors into the canyon, one of which is through the change room, and the rest are on the south side and have to be opened electrically by operations personnel from within the building.

Doors to stairwells are fire rated (Class B, 1 1/2 h), allowing entrance from 221-B to 271-B. The 221-B to 271-B doors have fusible line closure mechanisms and will be activated by smoke detectors. Pipe penetrations and openings (Ref. 5-62) are caulked with an approved sealant to provide separation and 1 1/2-h-rated smoke detectors are installed in the ducts penetrating the wall.

Cell fires and/or the breaching of the 291-B filter system can be caused not only by a fire, but also in the process of putting out a fire with water sprays. This implies that preventive measures used for control of fire can destroy the filters if the water sprays are initiated prior to the investigation establishing the existence of a fire. However, the 291-B filter fire protection system is activated either automatically by heat detection devices or manually from the dispatcher's office.

9 3 1 2 8 9 9 2 0 4 4

Automatic activation of the system results if both heat detectors in the 291-B wind tunnel duct are tripped by a heat source or if both heat detectors in any of Cells 10 or 26 through 30 are tripped. The fire protection system includes the following features.

- Heat Detectors--Due to large inventory of flammable solvent, fire and explosions are a potential hazard. The Fenwall rate-compensation-actuated fire detection unit, a bimetallic switch device in which the rapid expansion of the outer stainless steel shell causes the closure of switch contacts suspended on low expansion struts sealed within the shell, is activated by ambient temperature excursions above 250°F, initiating the corresponding SCAM (canyon air monitor) unit to light up in the dispatcher's office and the horn to sound. The horn is silenced upon acknowledgement of the signal but the light signal will continue to be illuminated until the cell condition is rectified.

- Single Heat Detectors--Single heat detectors are located in Cells 4, 9, 13, 14, 17 through 25, and 34 through 39. Upper cell sprays in single heat detector cells require manual actuation by an operator.

- Dual Heat Detectors--Dual heat detectors are located in 221-B processing Cells 10, and 26 through 30, which contain organic solvent. Foam spray is activated to one or more cells through the upper cell sprays upon response to heat detectors.

- Fire Alarm Relay--Fire alarm is automatically relayed to the Fire Department.

- Diversion of Canyon Air and Fan Operation--Capability for rapid diversion of the canyon exhaust air to the sand filter exists. Canyon supply fans and the electrical exhaust fans trip in the event of a fire, allowing only one turbine driven fan to operate.

- Tunnel Heat Detectors--Two heat detectors are located in the wind tunnel. A 5 gal/min water fog spray in the wind tunnel responds automatically to a fire and a 50 gal/min water fog spray can be turned on manually after hose connections are made.

### 5.10.5.5 Cell Foam Systems and 291-B Exhaust Ventilation Systems Fire Protection

5.10.5.5.1 Cell Foam System. The heat detectors in Cells 10, 26, 27, 28, 29, and 30 are dual element jumpers. When one element is activated by a heat source, the annunciators on the dispatcher's panel and the alarm lights on the pipe gallery box are activated, and an alarm is transmitted to the Fire Department through master fire alarm box 2421 near 291-B. When the second element is activated, the electrical valve to the cell foam system for the cell is activated allowing foam to spray into the cell through the

upper sprays at about 200 gal/min. Simultaneously, the valves open, dumping the water from the sand filter seal to fill the D filter outlet seal, the canyon supply fans will shut down, the 5 gal/min fog nozzle in the wind tunnel will operate. Once the flow of foam to a cell is activated, it will continue until the heat detectors are cooled down or until the manual switch in the dispatcher's panel has been turned to "Spray Stop." In automatic operation, the flow will continue for about 60 s after the cell element has cooled. This is an adjustable setting. A flow switch is installed between the foam tank and the spray header, which indicates on the dispatcher's panel that foam is flowing and trips the master fire alarm box 242.

When an alarm is received in the dispatcher's office and only the heat detector alarm light is on, the valves to an individual cell may be operated manually to start the flow of foam to the cells. Foam flow will continue for a period of approximately 60 s after the switch is turned to the "Auto" position. The foam can be stopped by turning the manual switch to the "Spray Stop" position. The switch will return to the "Auto" position when released and the system will return to the auto condition after a period of 30 s. This delay period is adjustable from zero to 5 min. Motor operated valves to the foam system use rectified 24 V dc and are backed up by a battery system. These batteries are located at Section 13 in the pipe gallery and will operate the system in the event of an ac power loss to the system.

All manual valves in the foam system are left open, and the valves are monitored by tamper switches mounted on the individual valves. If a valve is closed, the trouble light on the dispatcher's foam system panel (#1) will light, and the valve must be opened before the light will clear. Temporarily,* the isolation valve (121-R) in the foam concentrate discharge line has been closed in order to stop the concentrate diffusion through the piping system into the water side of the tank. Valve tamper switches are also mounted on the main isolation Valves on the main water header at each end of the building.

There is one trouble light on the dispatcher's foam system panel (#1) which monitors five trouble areas. The fire alarm box in the pipe gallery has trouble lights which isolate these five trouble areas. These trouble areas are:

- Fire detector trouble (shorts in cell fire detector wiring)
- Loss of ac power
- Loss of dc power
- O, S, and Y valves closed

*To be reviewed for consistency with the drawings.

- Header valve at west end closed. If the trouble light comes on at the dispatcher's panel, the operator refers to the panel in the pipe gallery to locate the source of the trouble. An additional annunciator located on #5 panel in the dispatcher's office shows motorized valve operation, fog nozzle operation, and filling of the 291-B outlet seals.

5.10.5.5.2 Foam Concentrate System (Fig. 5-80). The horizontal storage tank for the 6% foam concentrate is a Rockwood Diaphragm tank of 100 gal capacity. The tank, epoxy lined by the manufacturer to resist the acidic condition of the "light water," is of steel construction, flanged at the middle and provided with a flexible diaphragm for a working pressure of 175 psig. The proportioning controller with a stainless steel metering orifice plug is sized for a flow rate of 190 gal/min at the discharge end of the proportion device using 6% foam.

The flow switch normally opens the contacts and is equipped with an instant recycling retard device on the switch actuation, adjustable from 15 s to 1 min.

5.10.5.5.3 291-B Exhaust Ventilation Fire Protection Systems. Two Fenwall heat detectors are installed in the 291-B duct. One is installed in the manhole just south of 221-B, and the other is located in the turbine inlet duct down stream of the filters. When either of these detectors is activated by a heat source, the motorized valves open filling the "D" filter outlet seal, the 5 gal/min fog nozzle operates, the canyon supply fan units shuts off, and a signal is sent to the Fire Department. The sprays in the filter banks, and the 50 gal/min tunnel spray are manually operated, and Operations personnel are required to physically hook up hoses and open the related valves. Alarms on annunciator panel #5 in the dispatcher's office will indicate motorized valve operation, seal water level in the outlet seal, fog nozzle operation, and operation of the pressure isolation valve.

When the heat detectors in cells other than the foam equipped cells are activated, there will be an alarm sent to the Fire Department and the alarm will register on the heat detector panel #3 on the dispatcher's office. The "Fire Alarm Manual SW" on the #5 dispatcher's panel will cause the same sequence of events as the tunnel and duct heat detectors. Activation of the switch will divert the airflow at 291-B through the sand filter, cut off the canyon supply fans, initiate the 5 gal/min sprays, and notify the Fire Department. There are two annunciator panels at present to indicate high temperature in cells not connected with the foam spray system. In addition to the one located in the #3 dispatcher's panel, there is a cell annunciator for Cell 4 on the top panel of the #5 dispatcher's panel.

5.10.5.6 221-BB Process and Condensate Building. The building has a construction classification of "unprotected noncombustible" and an occupancy classification of "general purpose industrial". This building is equipped with smoke detectors having a direct alarm to the Hanford Fire Department. The building also has manual pull boxes and an adequate number and type of portable fire extinguishers. The nearest hydrant is approximately 325 ft east of the building. Due to the detection system, the distance to

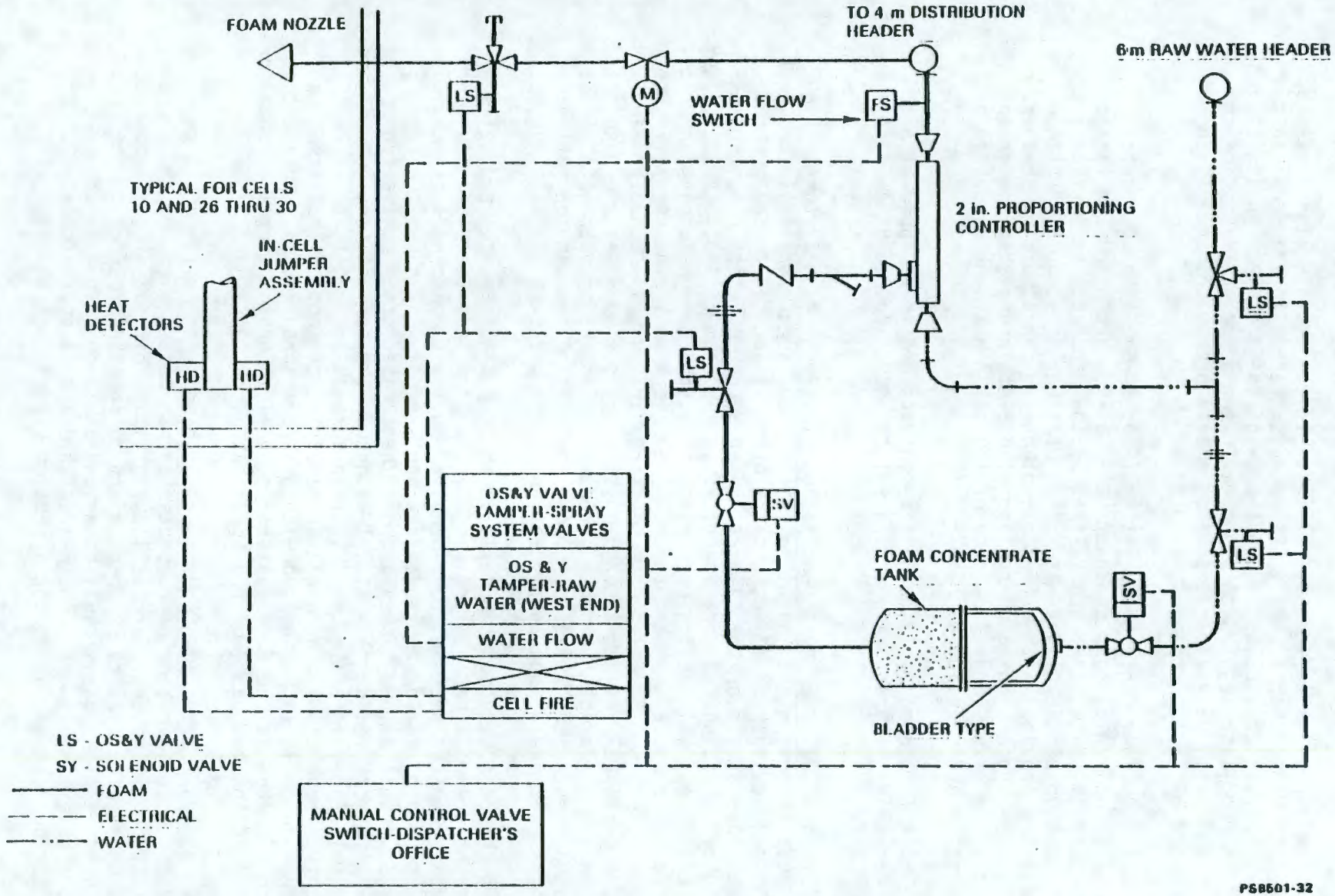


FIGURE 5-80. Foam Concentrate Fire Protection System.

surrounding buildings, and a quick response from the Hanford Fire Department establishes that the facility fire protection situation is adequate. A portion of this building is posted for airborne radioactivity, therefore if a fire occurred the potential exists for onsite and offsite contamination spread. This building has acceptable exits and is rarely occupied. No foreseeable life safety problems are expected.

5.10.5.7 212-B Cask Loading Stations Facility (Ref. 5-10). The fire protection system for 212-B, which is a Category A Building, includes alarm boxes, overhead sprinkler lines, heat detectors, fire extinguishers, telephones, and intercoms. The location of this equipment is shown in Table 5-30. The building has a construction classification of "unprotected noncombustible" and an occupancy classification of "general purpose industrial." A master box is located on the exterior of the east wall. All systems have a direct alarm to the Hanford Fire Department. The nearest fire hydrant is approximately 100 ft southwest of the building. Due to the construction type, the limited amount of combustibles in the unprotected areas, the distance to the surrounding buildings and a quick response from the Hanford Fire Department establishes an acceptable situation.

TABLE 5-30. The 212-B Fire Protection System.

| Equipment | Location |
|---|---|
| Alarm boxes | Control room and outside east wall of change room |
| Overhead sprinkler lines | Lobby, stairwell, cask handling and surveillance entrance room, and change room |
| Heat detectors | Truck lock and control room |
| Fire extinguishers | Control room, truck lock, and cask handling and surveillance room |
| Telephones--PAX phones and outside phones | Control room and cask handling and surveillance room |
| Intercom | Control room and cask handling and surveillance room |

5.10.5.8 276-B Organic Storage and Makeup Facility. The building has a construction classification of "fire resistive" and an occupancy classification of "special purpose industrial." This building is protected by an automatic deluge system which discharges by means of heat activating devices (HADs). The building is also equipped with an adequate number of portable fire extinguishers and one fire hose line. There is a master box located on the exterior of the west wall. The suppression system has a direct alarm to the Hanford Fire Department. The nearest fire hydrant is located approximately 90 ft north of the building. Due to the construction type of the building, the fire suppression system, the distance to surrounding buildings, and a quick response from the Hanford Fire Department established an adequate fire protection situation. This building has acceptable exits and is rarely occupied, therefore no foreseeable life safety problems are expected.

5.10.5.9 291-B Exhaust Fan Control House. The building has a construction classification of "fire resistive" and an occupancy classification of "special purpose industrial." This building is equipped with a smoke detector and manual pull box having a direct alarm to the Hanford Fire Department. The building also has an adequate number of portable fire extinguishers. The nearest fire hydrant is approximately 80 ft north of the building. Due to the fire detection system, the construction type of the building, the distance to surrounding buildings, and a quick response for the Hanford Fire Department establishes an acceptable fire protection situation. This building has adequate exits and is rarely occupied, therefore no foreseeable life safety problems are expected.

5.10.5.10 221-BF Effluent Control Building. This building has a construction classification of "fire resistive and unprotected non-combustible" and an occupancy classification of "special purpose industrial." There is no fire protection system. The nearest fire hydrant is approximately 15 ft north of the building. Due to the location of this facility and the distance to surrounding buildings establishes an acceptable fire protection situation and due to the separation of the rooms below grade, if a fire developed, contamination would not be expected to spread beyond the area of the fire origin. This building has an adequate exit and is rarely occupied, therefore no foreseeable life safety problems are expected.

5.10.5.11 282-B and 282-BA Emergency Well Pump Houses. These buildings have a construction classification of "unprotected non-combustible" and an occupancy classification of "special purpose industrial." Both buildings are equipped with smoke detectors having a direct alarm to the Hanford Fire Department. The buildings also have portable fire extinguishers. The nearest fire hydrant is approximately 85 ft east of the buildings. Due to the distance to surrounding buildings, the fire detection system and a quick response from the Hanford Fire Department establishes an acceptable fire protection situation. These buildings have adequate exits and are rarely occupied, therefore no foreseeable life safety problems are expected.

5.10.5.12 217-B Demineralizer Building Facility. The building has a construction classification of "unprotected non-combustible" and an occupancy classification of "special purpose industrial". This building is equipped with portable fire extinguishers. The nearest fire hydrant is

approximately 60 ft east of the building. Due to the construction type of the building, the distance to surrounding buildings, and a quick response from the Hanford Fire Department establishes an acceptable fire protection situation. This building has acceptable exits, therefore no foreseeable life safety problems are expected.

## 5.11 MAINTENANCE SYSTEM (Ref. 5-64, 5-65)

To avoid exposure of personnel to excessive radiation, the equipment has been designed to provide trouble free service with minimal maintenance. However, the finite life span of the equipment dictates the required service or replacement at the end of life. Remote installation and removal have been factored into the initial design. The B Plant canyon is provided with an electrically operated overhead bridge crane.

- Crane - The crane is located on rails which extend the length of the canyon. The main trolley runs atop the bridge and carries a 75 ton hoist and a 10 ton hoist. The 10 ton hoist is fitted with an electrically operated rotary hook. Beneath each of the two bridge girders is a monorail and trolley. Each trolley carries a one ton and half ton hoist from which hang auxiliary hooks, grabbers, or impact wrenches having 2 or 3 sockets. The bridge, the three trolleys, the six hoists, the rotary hook, and the two impact wrenches are controlled from the crane cab.

  The area below the crane is illuminated by twenty floodlights on the bridge, four 1,000 W lamps beneath the trolley, and two 1,000 watt periscope spotlights.

- Rotary Crane Hook - The 10 ton rotary hook was designed to allow the crane greater versatility. A 115 V dc gear motor drives the hook through a slip clutch set at 60 ft-lb maximum torque. The load is transmitted from the block by a tapered roller bearing.

- Crane Optical Aids - Two large periscopes, one on each side of the crane bridge, permit the operator to view the crane hooks, impact wrenches, and cell equipment with clarity. Although the field of vision is rather limited (to gain magnification) scanning may be obtained at the operators discretion by electric motors which telescope the periscope across the canyon, and rotate it on its axis. The eye pieces are automatically synchronized with the viewing direction of the objective ends of the periscopes so that the operator is always looking in the true direction. Large negative lenses have been installed on the outboard side of each periscope objective so that when the objective is rotated in this direction, a tremendously increased field of view is obtained. This allows the operator, in one glance, to get a general view of the canyon to see whether or not all cover blocks are in place, and to see if anyone is on the deck.

A television camera can be installed under the crane bridge. The viewing angle of this instrument is varied by electric motors under the operator's control which rotate the camera on both the horizontal and vertical axes. The picture picked up by the camera is transmitted to the crane cab where it appears on the screen of a television monitor. Although the television lacks the definition of the periscope, it has a broad field of view, is not as tiring to the eye, permits quicker scanning of the situation, and affords an additional view from a different angle. Portable closed circuit television systems may be used with the crane when necessary to gain additional viewpoints. The portable television equipment requires high intensity lights and is used only when absolutely necessary.

- Crane Maintenance Platforms - One mobile crane maintenance platform is provided to service the cranes. Each is mounted on a short section of rails at the end of the canyon and is propelled by driving the wheels through a handcrank mechanism. Access to each platform is provided by a fixed ladder mounted on the canyon end walls. A fixed, caged ladder hangs from the west end platform allowing access at any position along the rails. The east platform is of split level design, which allows maintenance of the crane on the upper level and of the impact wrenches on the lower. The east platform has a swing down ladder which may be lowered from the platform by a manually operated winch.

- Electrical Services - The crane is supplied with 440 V, 3-phase, 60 cycle power via conductors and collector shoes mounted on the crane. Similar conductors and collectors supply power to the trolley. The monorail trolleys are supplied by festooned cables. The rotary hook and the impact wrenches and/or grabbers are supplied through reel type cord retractors. The cab is equipped with a radio telephone in addition to a regular telephone.

## 5.12 COMBINED SURVIVABILITY ASSESSMENT OF B PLANT FACILITIES--SYSTEMS INTEGRITY AND OPERABILITY (Ref. 5-7, 5-63, Tables 5-31 through 5-35)

The survivability of B Plant support facilities has been evaluated and rated based on the results of stress analysis, methods of calculations, safety factors and engineering judgment. Conservatism has been built into the survivability rating to account for the aging and weathering effects of these structures. While uncertainties had to be considered in reaching the survivability rating of each structure, a relatively wide range has been allowed.

From the evaluation ratings, the Tank Farm (211-B) and the Stack Effluent Monitoring Building (292-B) are expected to sustain major structural damages and functional loss due to natural forces effect. The rest of the structures were ranked medium or high and may expect to have

TABLE 5-31. The 284-E Powerhouse, Steam Supply System, and Emergency Electrical Power (Ref. 5-63).

| Item or system | Estimated probability of survival[a] | | |
|---|---|---|---|
| | 0.10-g HRHE | 0.25-g SSE | 175-mph tornado |
| 284-E Building | High | High | Low |
| Boiler and furnace system | High | High | Low |
| Boiler feed water system | High | Medium to high | Low |
| Steam system | High | Medium to high | Low |
| Emergency electrical system | Medium to high | Low | Low |
| Coal supply system | High | High | Low |

TABLE 5-32. Evaluation of Filter Cells.

| Structure | Loading | | | |
|---|---|---|---|---|
| | Earthquake | | Wind/tornado | Tornado generated missile |
| | HRHE | SSE | | |
| First, second cells | | | | |
| - Roof | Safe | High | N/N | N/N |
| - Supports | Safe | Safe | N/N | N/N |
| - North wall | High | High | N/N | N/N |
| - Filter frame | Safe | Safe | N/N | N/N |
| Third cell | | | | |
| - Roof | Safe | Safe | N/N | N/N |
| - Supports | Safe | Safe | N/N | N/N |
| - Wall | High | High | N/N | N/N |
| - Filter frame | Safe | Safe | N/N | N/N |
| - Metal building 20 x 40 | High | Medium | High | N/N |
| Fourth cell | | | | |
| - Roof | Safe | Safe | N/N | N/N |
| - Supports | Safe | Safe | N/N | N/N |
| - Walls | High | High | N/N | N/N |
| - Filter frame | Medium | Medium | N/N | N/N |
| Fifth cell | | | | |
| - Roof | Safe | Safe | Safe | Safe |
| - Support | Safe | Safe | Safe | Safe |
| - Walls | Safe | Safe | Safe | Safe |
| - Filter frame | Medium | Medium | Safe | Safe |
| Instrumentation building (above ground) | Safe | Safe | Medium | Medium |
| Sand filter cell | | | | |
| - Roof | High | Medium | N/N | N/N |
| - Column | High | Medium | N/N | N/N |
| 291-B Stack | High | Medium | High | Medium |

N - Not applicable.

9 3 1 2 8 9 9 2 0 5 4

TABLE 5-33. Evaluation of Equipment and Systems.

| Item | Estimated probability of survival | | | | | |
|---|---|---|---|---|---|---|
| | Structural and anchorage | | | Functional | | |
| | 0.10 g HRHE | 0.25 g SSE | 175 mph tornado | 0.10 g HRHE | 0.25 g SSE | 175 mph tornado |
| Electrical power | H | M | L | M | L | L |
| Raw water system | M | L | L | M | L | L |
| Fire protection system | M | L | H | M | L | L |
| Cooling water | M | L | H | M | L | L |
| Compressed air | M | L | L | M | L | L |
| Process vessel system | M | L | H | M | L | L |
| Ventilation systems | | | | | | |
| 221-B Canyon supply | H | M | H | M | L | L |
| 221-B Galleries supply and exhaust | H | M | L | M | L | L |
| 221-B Cask Station supply | H | H | L | M | L | L |
| 221-BB Process steam and condensate | H | H | L | M | L | L |
| 221-BF effluent control | H | H | L | M | L | L |
| Control panels | M | L | H | M | L | L |
| Radiation monitoring systems | | | | | | |
| Personnel protection | M | L | H | M | L | L |
| Environment protection | H | H | L | M | L | L |
| 221-BB Process condensate sample tanks and confinement | | | | | | |
| Steel structure | H | H | L | H | H | L |
| Concrete pit | H | H | M | H | H | M |
| Tanks | H | H | M | H | H | H |
| 217-B Demineralizer Building | H | H | L | H | H | H |
| 292-B Stack monitoring | M | M | L | M | M | L |

H =
L =
M =

TABLE 5-34. Evaluation of Cask Loading Station 212-B.

| Structure | Loading | | | |
|---|---|---|---|---|
| | Earthquake | | Wind/tornado | Tornado generated missile |
| | HRHE | SSE | | |
| Steel structure (cask handling and surveillance | Safe | Safe | Low | Medium |
| Concrete retaining wall (below grade operating gallery | Safe | Safe | N/N | N/N |
| Structure additions[2] | N/N | N/N | Low | Low |

N - Not applicable.

TABLE 5-35. Evaluation of Tank Farm 211-B.

| Structure | Loading | | | | |
|---|---|---|---|---|---|
| | Earthquake | | Wind/tornado | | Tornado generated missile |
| | HRHE | SSE | Empty tank | Full tank | |
| Tank--9 ft dia. x 36 ft lg | Medium | Low | Low | Medium | Safe |
| Tank--10 ft dia. x 14 ft high | Low | Low | Low | High | Safe |
| Tank piping | Low | Low | Medium | Medium | Medium |
| Platform | Low | Low | Low | Low | Medium |

localized structural damage. Those ranked medium will be ranked partially functional. Those ranked high should have minimal effect on their ability to function.

### 5.12.1 Survivability of 291-B Stack (Fig. 5-33)

The probability of overturning the entire stack under SSE loading has been evaluated at below 50% (against medium range of survivability). The overturning of the entire stack will introduce an impact loading on the neighboring structures at a radius of approximately 200 ft. The structures affected will include sand filter building, four filter cells, and the instrument building. The impact will not affect all the structures simultaneously. It is hard to predict the direction of stack fall due to uncertainty of the direction of earthquake loading. However, the impact on the underground structures would not result in structural collapse but the above-ground structures will collapse under the impact.

A quantitative estimate of the area that would be plugged in the stack as a result of masonry lining fracture or collapse due to earthquake, is difficult to predict, but the probability of complete plugging is low for HRHE loading as compared to a high probability of plugging for SSE loading. The most severe stack plugging will still leave limited area for gas circulation and partial functioning of the ventilation system.

### 5.12.2 Survivability of Filters (Table 5-33)

The filter cells are in the safe survivability range. In certain structures, such as filter frames, the probability of survivability is above 75%. However, the probability that the total function of filter cells will be lost is fairly low due to either HRHE or SSE loading. Loss of sand filter cell is high during the HRHE and the SSE.

### 5.12.3 Equipment Qualification

Evaluations of B Plant equipment components for natural forces have not been performed as of this time. A critical list of components and/or internal systems that are to be evaluated will be available following risk assessment by HS&E, based on proposed processes in B Plant. The analysis work covered here addresses the B Plant support facilities structures.

## 5.13 REFERENCES

5-1. ERDA-1538, December 1975, Final Environmental Statement, Waste Management Operations, Hanford Reservation, U.S. Energy Research and Development Administration, Washington, D.C.

5-2. PNL-3509, Pt. 2, July 1982, Standardized Input for Hanford Environmental Impact Statements. Part II: Site Description, J. D. Jamison, Pacific Northwest Laboratory, Richland, Washington.

5-3. DOE-MC-2401, 1975, Physical Protection of Classified Matter and Information.

5-4. RHO-MA-139, January 1978, Environment Protection Manual, J. V. Panesko, et al., Rockwell Hanford Operations, Richland, Washington.

5-5. DOE/EV/1930-T5, April 1984, A Guide to Reducing Radiation Exposure to As Low as Reasonably Achievable (ALARA), R. L. Kathren, et al., Pacific Northwest Laboratory, Richland, Washington.

5-6. Unnumbered, April 1980, Report of Investigation of the February 27, 1980, B Plant Trench Block Incident, Rockwell Hanford Operations, Energy Systems Group, Richland, Washington. Under Contract DE-AC06-77RL01030.

5-7. SD-WM-TA-002, September 30, 1983, B Plant Support Facilities Natural Forces Evaluation, W. W. Chen, et al., Rockwell Hanford Operations, Richland, Washington.

5-8. Unnumbered, June 19, 1974, Progress, Seismic Analysis of the Building 221-T, URS/J. A. Blume and Associates, Engineers.

5-9. SDC4.1, (Rev. 7), February 1974, Hanford Plant Standard Arch. Civil Design Criteria, Design Load for Structures.

5-10. ARH-1690, October 1971, 212-B Cask Station Information Manual, compiled by B. J. Grady, Jr., and H. J. Kirkman, Waste Management Process Engineering, Atlantic Richfield Hanford Company, Richland, Washington.

5-11. ERDA-76-21, Second Edition, Nuclear Air Cleaning Handbook - Design, Construction and Testing of High-Efficiency Air Cleaning Systems for Nuclear Applications, C. A. Burchsted, J. E. Kahn, A. B. Fuller, Oak Ridge National Laboratory, Oak Ridge, Tennessee.

5-12. CVI 73172, November 19, 1943, #10 Type "LLD" Fan - Special ARR. 3, Buffalo Forge Company, Buffalo, New York. (Dwg. #7W-1889, Rev. 1).

5-13. BPF 73171, November 11, 1943, #50 Wet Cell Washer, Buffalo Force Company, Buffalo, New York. (Dwg. #7C-3977).

5-14. CVI 20287, March 4, 1977, Equipment for ARHCO Project B-114, 221-B Ventilation Improvements, (P.O. #W6N-BBR-13640, 2 - 10,000 ACFM Air Supply Unit), Burgess Industries Incorporated, Environmental Systems Division.

9 3 1 2 3 9 2 0 5 8

5-15. Intentionally Left Blank - Canyon Supply Fans.

5-16. CVI 14869, June 17, 1966, Model 88-8-024 (EPN-291-B-K2-1 and EPN-291-B-K2-2). General Blower Company, Wheeling, Illinois (P.O. JAJ-0-50560).

5-17. CVI 13902, June 26, 1963, Exhaust Steam Turbine Fan G.E. H3C-888-4-1-594, Clarage Fan Company, Kalamazoo, Michigan.

5-18. Internal Letter, October 10, 1977, Activation Fourth Filter Cell, etc., R. B. Bixler to A. J. Low, Rockwell Hanford Operations, Richland, Washington.

5-19. Internal Letter, October 19, 1977, Activation of B Plant Fourth Filter Cell, A. J. Low to L. I. Brecke, Rockwell Hanford Operations, Richland, Washington.

5-20. ARH-2936, November 29, 1973, Estimates of Radionuclide Inventories in 291-B Exhaust Filter Cells, J. P. Sloughter, Atlantic Richfield Hanford Company, Richland, Washington.

5-21. ARH-CD-352, June 9, 1975, Hazards Review - Waste Management Effluent Controls - B Plant Fourth Filter - Project B-1120, F. B. Fecht, et al., Atlantic Richfield Hanford Company, Richland, Washington.

5-22. ARH-CD-105, June 21, 1974, Hazards Review - B Plant Filter System, J. B. Fecht, et al., Atlantic Richfield Hanford Company, Richland, Washington.

5-23. Loss Prevention, (Vol. 8), November 1973, The Use of Intumescent Coatings for Fire Protection of Structural Steel, J. F. Rourke, Alki Hamef. Corp., Subs., Cities Service Company, Rockville, Connecticut.

5-24. Loss Prevention, (Vol. 8), November 1973, Fire Protection of Structural Steel, G. K. Castle, Avio Systems Division, Avco Corp., Lowell, Massachusetts.

5-25. HW-2318, May 28, 1966, Summary Report on the PUREX Canyon Ventilation Exhaust Filter, J. P. Duckworth, et al., General Electric Company, Richland, Washington.

5-26. CONF-720823, August 1972, Effects of Radiation on Reactor Confinement Systems Materials, L. R. Jones, Savannah River Laboratory, E. I. duPont de Nemours and Company, Aiken, South Carolina (12th AEC Air Cleaning Conference).

5-27. CONF-720823, August 1972, Performance of Absolute Filters at Temperatures From Ambient to 1,000°F, M. W. First, Harvard School of Public Health, Boston, Massachusetts (12th AEC Air Cleaning Conference).

5-28. ARH-139, November 15, 1967, Hazards Evaluation, Waste Fractionization - B Plant (Project CAC-144), B Plant Modifications for FPCE - Waste Management Integrated Facilities (Project CAC-181) and Promethium Purification - B Plant (Project AAE-207), R. B. Bixler, et al., Atlantic Richfield Hanford Company, Richland, Washington.

5-29. ISBN-0-8493-0460-8, 60th Edition 1980, CRC Handbook of Chemistry and Physics, Editor Robert C. Weast, et al., CRC Press.

5-30. ARH-2918, October 22, 1973, Hazard Review - Improved Fire Protection -B Plant Exhaust Filters - Project HCP-664, J. B. Fecht, et al., Atlantic Richfield Hanford Company, Richland, Washington.

5-31. ARH-2927, November 1973, Evaluation of the B Plant Sand Filter, D. E. Eakin, Atlantic Richfield Hanford Company, Richland, Washington.

5-32. Unnumbered, July 20, 1983, High Efficiency Particulate Air Filter System Test, Sheet (Sand Filter), to H. P. Simonds from W. Aichele.

5-33. BPF 701746, September 28, 1943, Perforated Radial Brick and Reinforced Concrete Chimneys, Project 9536, The Rust Engineering Company, Pittsburgh, Pennsylvania for E. I. duPont Nemours.

5-34. SD-432-CDR-001, September 1982, Exhaust Stack Upgrade, B Plant, Project B-432, Kaiser Engineers Hanford Company, Richland, Washington.

5-35. ISO-100, August 1967, Waste Management Technical Manual, edited by J. S. Buckingham, Waste Management Process Engineering, Research and Engineering, ISOCHEM, Inc. Richland, Washington.

5-36. Unnumbered, B Plant Equipment and Facilities.

5-37. Unnumbered, Tank Calibration Manual.

5-38. ISBN-0-07-049478-9, 1953, Chemical Engineer's Handbook, Robert H. Perry and Cecil H. Chilton, McGraw Hill Book Company, New York, NY.

5-39. Later

5-40. ARH-3017, March 1974, Caustic Strike Flowsheet for Final Purification of B Plant Strontium Solutions, W. G. Wilson, Atlantic Richfield Hanford Company, Richland, Washington.

5-41. PFD-B-060-00002, May 1983, B Plant Vessel Vent #1 System Flowsheet, M. E. Johnson, Rockwell Hanford Operations, Richland, Washington.

5-42. RHO-MA-139, Environmental Protection Manual, Rockwell Hanford Operations, Health, Safety and Environment Function, Environmental Protection Department, Richland, Washington.

5-43. PFD-B-060-00001, September 1982, B Plant Vessel Vent #2 System Flowsheet, M. E. Johnson, Rockwell Hanford Operations, Richland, Washington.

5-44. CVI 166650, February 1967, Installation, Operation and Service Instructions on the Series 650-78 Storage Units, Cardox Division of Chemetron Corporation, Monee, Illinois.

5-45. SD-428-CDR-001, December 1982, Conceptual Design Report, B Plant Electrical Substation Upgrade - Project B-428, Kaiser Engineers Hanford Company, Richland, Washington.

5-46. SD-430-CDR-001, December 1982, Conceptual Design Report, B Plant Electrical Cable Replacement - Project B-430, Kaiser Engineers Hanford Company, Richland, Washington.

5-47. CD-465-CDR-001, January 1984, Conceptual Design Report, B Plant Electrical Status Indication Project B-465, Kaiser Engineers Hanford Company, Richland, Washington.

5-48. SD-429-CDR-001, December 1982, Conceptual Design Report, B Plant Load Center Upgrade, Kaiser Engineers Hanford Company, Richland, Washington.

5-49. Internal Letter, September 28, 19xx, Unscheduled Outages - Lines E8-L53 and B-L58 to 221-B Building, R. C. Ingersoll to R. B. Bixler.

5-50. RHO-MA-111.3, Emergency Plan B Plant/WESF Procedure.

5-51. PFD-B-600-001, February 1982, Cooling Water Flowsheet for B Plant and Encapsulation, R. D. Weissenfels, Rockwell Hanford Operations, Richland, Washington.

5-52. HWS-8977, April 29, 1971, Procurement Specifications for Stand-by, Diesel-Engine-Driven, Deep-Well Pump Building 282-8A, Project HAP-631, Hanford Engineering Services, Richland, Washington.

5-53. Form No. MC-2529, N., Joy Rotary Screw Compressor TA-1240, Joy Manufacturing Company, Michigan City, Indiana.

5-54. 3600-EIV-0, October 9, 1967, Feather Valve Compressors, Vertical Unit VB8-(12x9) L-86000T, Worthington Corporation, Buffalo, New York.

5-55. T-3074-038-A, December 18, 1980, Type-30, Concentric Ring Non-Lubricated Cylinder Type Compressors for Oil-Free Air (Model 5T2 NL), Ingersoll Rand, Compressor Division.

5-56. ARH-3020, July 1976, Guide to Fire Protection in Caves, Canyons, and Hot Cells, H. A. Lee, Atlantic Richfield Hanford Company, Richland, Washington.

5-57. Nuclear Safety, Vol. 21, No. 1, January-February 1980, Fire Hazards and Consequences of Fires in Nuclear Power Plants, by J. H. Falbert, NATLSCO, Long Grove Illinois.

5-58. CONF-720823, August 1972, Fire Protection in Caves, Canyons and Hot Cells, H. A. Lee, Atlantic Richfield Hanford Company, Richland, Washington, (12th AEC Air Cleaning Conference).

5-59. CONF-720823, August 1972, Fire Protection of HEPA Filters by Using Water Sprays, J. R. Gaskill, et al., University of California, Lawrence Livermore Laboratory, Livermore, California (12th AEC Air Cleaning Conference).

5-60. Loss Prevention (Vol. 8), November 1973, Reliability of Fire Protection Systems," M. J. Miller, Factory Mutual Research Corp., Norwood, Massachusetts.

5-61. RHO-MA-221, September 1978, ACCIDENT PREVENTION STANDARDS, Rockwell Hanford Operations, Richland, Washington.

5-62. SD-472-FDC-001, August 1983, Miscellaneous Fire Doors and Life Safety Upgrade - Waste Management Facilities, M. P. Allison, Rockwell Hanford Operations, Richland, Washington.

5-63. Letter #72500-82-218, May 28, 1982, Fire Protection Survey of B Plant and Surrounding Facilities, H. H. Bucci to R. L. Hibbard, Rockwell Hanford Operations, Richland, Washington.

5-64. SD-478-FDC-001, April 13, 1983, Functional Design Criteria, B-478 B Plant Canyon Lighting Upgrade, F. M. Jones, Rockwell Hanford Operations, Richland, Washington.

5-65. SD-479-FDC-001, April 1983, Functional Design Criteria, B-479 B Plant Canyon Crane Upgrade, F. M. Jones, Rockwell Hanford Operations, Richland, Washington.

5-66. RHO-CD-1582, B Plant Natural Forces Hazards Survey, F. R. Vollert and T. J. Higgins, Rockwell Hanford Operations, Richland, Washington.

5-67. SD-495-CDR-001, November 1984, Conceptual Design Report, B-Plant MCC Upgrade, Project B-495, J. E. Witherspoon, Rockwell Hanford Operations, Richland, Washington.

5-68. HPS-156-M, Rev. 1, April 7, 1982, Standard Specification for Compressed Supplied Breating Air Systems, DOE-RL, Richland, Washington.

9 3 1 2 8 9 0 0 6 2

# 6.0 PROCESS SYSTEMS

## 6.1 INTRODUCTION

The chemical reprocessing of irradiated nuclear reactor fuels in the 200 East Area generates significant volumes of high-level waste. This waste contains >100 μCi/mL of a mixed spectrum of radioactive fission products typically found in reactor fuels stored for 3 to 12 mo after being discharged from the reactor at the Hanford Site. By definition, high-level waste is the liquid waste stream "resulting from the operations of the first-cycle extraction system, equivalent concentrated wastes from subsequent extraction cycles, or equivalent wastes from a process not using solvent extraction in a facility for processing irradiated reactor fuels" (Ref. 6-1).

These fission products include >2 μCi/mL of $^{137}Cs$, $^{90}Sr$, and long-lived alpha emitters or the combined total. Liquid or slurry wastes with a significant potential of becoming contaminated to the degree of high-level waste are treated as high-level contaminated waste.

Self-boiling liquid wastes, generated and stored in underground tanks, are processed in B Plant for the removal of $^{137}Cs$ and $^{90}Sr$ before solidification by evaporation and cooling of the residual bulk salts in the tanks. Removal of the cesium and strontium isotopes is necessary prior to solidification to limit the waste temperature and radiolytic decomposition hazards.

The strontium and cesium, extracted from the high-level waste processed at B Plant, are purified to about 95 cationic wt % excluding monovalent impurities as feed to the Encapsulation Plant. Fission product purification minimizes encapsulation costs. The solids treatment, solvent-extraction, precipitation, and ion-exchange processing steps for fission product removal and purification produce waste streams. The ion-exchange loading waste is routed directly to the tank farm system. Other high-level non-boiling wastes (HLNBW) are concentrated in the plant before routing to the tank farm system.

Of the total 5.4 x $10^8$ Ci fission product inventory at the Hanford Site in 1981, 99% was high-level waste 10 to 38 yr old, allowing ample time for decay of short-half-life isotopes. The high-level waste was characterized as ~58% Ce and Sr and 42% mixed fission products. Cesium and strontium are encapsulated and stored in the Waste Encapsulation and Storage Facility (WESF) following fractionization at B Plant. Residual fission products are in underground tanks.

### 6.1.1 Current Acid Waste (Ref. 6-3, 6-4, 6-5)

The current acid wastes (CAW), resulting from the separation of plutonium and uranium from N-Reactor spent fuels at the PUREX Plant, are concentrated and denitrated. This waste contains essentially all of the

fission products generated during fuel irradiation in the reactor core. This self-boiling waste contains high levels of fission products including two long-lived heat-producing radioisotopes, $^{137}Cs$ and $^{90}Sr$. Cesium and strontium are recovered from the CAW and purified to remove residual impurity cations in B Plant. The purified isotopes are converted to solid compounds and encapsulated at the WESF. From 4 to 20% of the strontium in these wastes is contained in about 0.5 to 1.0% solids volume associated with the CAW. The solids are composed primarily of silica and metal sulfates, silicates, and phosphates.

The PUREX CAW is routed via encased underground pipe lines to B Plant via the 244-AR Vault. The residual solids are separated from the supernatant by centrifuging and the strontium is removed from the solids by a sodium hydroxide-sodium carbonate metathesis process. After CAW reception from the vault and supernatant separation from the solids, the solids are water washed to remove residual mother liquor for prevention of subsequent cation precipitation. The solids are contacted with sodium carbonate-sodium hydroxide solution to convert the insoluble strontium to the carbonate form. The waste from the metathesis process is washed with a sodium carbonate-sodium hydroxide solution and the strontium carbonate is dissolved in nitric acid to extract ~70% of the strontium from the solids.

The supernatant is then treated for the recovery of cesium. Utilizing the property of the insolubility of cesium phosphotungstate salts, phosphotungstic acid (PTA) is added to the CAW supernatant to precipitate >98% of the cesium. The cesium phosphotungstate salts are separated from the supernatant by centrifugation. The supernatant contains 89% of $^{90}Sr$ originally in the CAW supernatant. The precipitate is washed with nitric acid and further dissolved in a sodium hydroxide solution for the final recovery of about 96% of the cesium. This cesium product is routed through two stages of ion exchange for further removal of sodium, potassium, and rubidium.

The metathesis product and the supernatant from the phosphotungstic acid process for cesium precipitation, are butted with 1.8:1 mole ratio citric acid to complex divalent and trivalent cations, the pH adjusted to 4.9 using sodium carbonate solution and eventually treated by solvent extraction for strontium recovery. Solvent extraction processing is performed in a series of four pulsed sieve plate columns and two batch contactors. The organic consists of di-ethylhexyl phosphoric acid (D2EHPA) and tributyl phosphate (TBP) in normal paraffin hydrocarbon (NPH). The D2EHPA is a liquid-liquid cation exchanger. The feed containing strontium is pumped to the 1A Column where strontium is extracted into the organic at a pH of 4.9. The sodium is scrubbed from the organic in the 1S Column with hydroxyacetic (HAcOH) acid-trisodium hydroxyethylenediaminetriacetic (HEDTA) acid solution at an initial pH of 2.4. The strontium, together with small concentrations of sodium, other divalent cations and impurities, is stripped in the 1B Column with dilute nitric acid. The solvent is washed with nitric acid in the 1C Column and with sodium hydroxide - sodium-citrate solution in a batch contactor for removal of trace rare earth, yttrium, uranium, iron, calcium and aluminum impurities. The D2EHPA is partially converted to the

sodium salt for pH control in 1A Column and recycled. The strontium recovery in the solvent extraction system is about 95%. The strontium is further purified by the sulfate precipitation and caustic strike processes.

The sulfate process requires four steps to remove calcium, magnesium and manganese from the strontium stream. The strontium, which is precipitated in the first strike leaving most of the impurities in the supernatant, is washed with sodium sulfate-dilute nitric acid solution and centrifuged to remove additional calcium and other occluded impurities in the supernatant. The solids are dissolved with HEDTA and the strontium is largely re-precipitated with sodium sulfate, leaving calcium, iron and other impurities in the supernatant. Finally, the strontium sulfate is converted to strontium carbonate by a sodium hydroxide-sodium carbonate metathesis solution. The strontium carbonate solids are removed from the metathesis by centrifuging. The strontium carbonate is dissolved and digested in nitric acid, sampled, evaluated and transferred to storage tanks for caustic strike process. The caustic strike is a batch process to remove any remaining metallic impurities from the strontium and essentially uses the same equipment as the PTA and the sulfate precipitation process.

Product from several sulfate precipitation campaigns is collected. When ~1,500 to 2,100 g-mol of strontium (6 to 15 MCi $^{90}Sr$, depending upon isotopic purity) have accumulated as sulfate precipitation product, the sulfate precipitation process is suspended and the equipment cleaned for the caustic strike process.

The caustic strike process is capable of removing ~90 wt% (excluding sodium) of the metallic impurities from the strontium product. The process involves the use of sodium hydroxide (solution) to precipitate the impurities at pH 10, removal of the precipitate via centrifugation, then acidification and self-concentration of the clarified solution. The precipitated solids are washed at pH 10 to recover strontium in the interstitial solution and then centrifuged. The clarified wash solution is acidified and combined with the previously concentrated solution from the first precipitation to undergo self-concentration to encapsulation feed standards. The washed solids, containing about 2% of the feed strontium, are dissolved in nitric acid then centrifuged. Solids collected in the centrifuge are dissolved in HEDTA and the nitric acid and HEDTA solutions are recycled to the solvent extraction system. More than nine-tenths of the strontium losses are recovered in the solvent extraction system, resulting in a net strontium loss from caustic strike of ~0.2%.

Cesium-bearing solutions are processed through two stages of Ion-Exchange (IX) for the purification of cesium. Initial cesium purification is accomplished in Cell 18 to separate metallic cation (Na + K + Rb:Cs mole ratio <1.5) impurities from the crude cesium hydroxide product from the PTA process.

The feed is diluted with demineralized water and is loaded onto the ion exchange bed. The impurity cations (sodium, potassium, and rubidium) are removed (scrubbed) from the bed with a dilute ammonium carbonate-ammonium hydroxide solution passed through the bed. The cesium is removed (eluted)

from the column with strong ammonium carbonate-ammonium hydroxide solution and the resulting product is concentrated and stored as feed for final purification.

The objective of the final cesium purification is to produce a cesium carbonate product to meet the requirements of the encapsulation specifications, designed to minimize the volume of material to encapsulate and control the corrosion rate by assuring that the salt remains in the solid form. Final cesium purification is attained in Cell 38 using inorganic ion-exchanger, Zeolon-900.

The feed, a semi-purified product from the Cell 18 ion exchange process, is diluted with demineralized water and loaded onto the ion exchange bed. The impurity cations (sodium, potassium, and rubidium) are removed (scrubbed) from the bed with a dilute ammonium carbonate-ammonium hydroxide solution passed through the bed in the same flow direction as the loading step. The cesium is removed from the ion exchange bed with a concentrated ammonium carbonate-ammonium hydroxide solution passed counterflow through the bed and the resulting product is concentrated. The concentrated cesium product is transferred to storage as available feed for the cesium encapsulation process. Feed normally consists of sodium-to-cesium mole ratios of about 1.0 while the resulting product has a sodium-to-cesium ratio of ~0.10. Encapsulation specifications limit the ratio to ≤0.15.

All these processes produce low-level waste and waste concentration process handles the radioactive waste. The waste concentration serves three essential functions:

- Collection, blending, and neutralization in TK-24-1
- Reduction of volume and separation of ammonia from the liquid waste.
- Disposal of the concentrated wastes to tank farms.

Low-level liquid wastes from Cell 18 ion exchange (IX) and Cell 38 final purification comprise the cesium processing waste. Low-level wastes from solvent extraction, sulfate precipitation, and caustic strike comprise the strontium processing waste. Miscellaneous streams contributing to the waste processing operation include cell drainage, encapsulation waste, and vessel vent condensate from the steam booster jet operation.

After the waste volume reduction by a typical factor of 10 to 20, the concentrated waste is sampled for final characterization and transferred to Tank Farms.

6.1.1.1 Current Acid Waste - Cesium and Strontium Recovery Flow Diagram (Ref. 6-6). All the calculations are based on an average composition of 80% Mark IV and 20% Mark IA fuel with an enrichment of 0.947 to 1.25% $^{235}U$ and of 12 wt% $^{240}Pu$. The fission product inventory is based on a burnup of 2,500 to 3,000 megawatt days per ton (MWD/T) for an out-of-core cooldown duration of 180 d. This is equivalent to 200 gal of CAW/MTU in a production

of 10 metric tons of uranium per day (MTU/d). Ionic and isotopic concentrations of $^{90}Sr$, $^{137}Cs$, and total rare earths (TRE) (Ref. 6-7), calculated concentration of uranium, plutonium and americium (Ref. 6-8) and those of neptunium (Ref. 6-9) were adjusted on a need basis to reflect a CAW feed of 2,000 gal/d. Routine sample analyses of waste streams in the head end process were not performed during previous campaigns and thus, meager information exists about the composition of this waste. However, based on accountability calculations for plutonium and the chemical similarity of neptunium and uranium, compositional streams of these isotopes were assumed identical.

6.1.1.2 Composition of PUREX Wastes (Ref. 6-10). Typical B Plant feed stream composition are shown in Table 6-1.

## 6.2 HEAD END METATHESIS PROCESS (Ref. 6-10, Fig. 6-1, 6-2)

The head end process begins with PUREX CAW being received into B Plant via the AR Vault. The CAW is split into two streams by centrifuging the slurry: CAW supernatant, and the residual solids. The CAW supernatant is fed to the PTA process where the supernatant is treated to precipitate cesium while the strontium remains in the solution. The residual solids are slurried and fed to the metathesis process where the solids are treated for strontium removal. The strontium occluded to the solids in the CAW feed amounts to ~3% of the total amount of incoming strontium. Strontium supernatant from the PTA process is combined with the strontium recovered in the metathesis process and fed to solvent extraction for strontium separation from impurity cations.

CAW is received from the AR Vault (TK-001-AR) into tank TK-11-2. Batch sizes range from 2,000 to 3,100 gal depending on the solids content. A nominal feed composition is given on the process flow diagram (Fig. 6-3). The 0.5 to 1.5% by volume solids are separated by centrifugation through the centrifuge (G-12-2). The supernatant, containing virtually all of the cesium and ~97% of the strontium overflows from the centrifuge (G-12-2) bowl and is collected in the supernatant tank (TK-12-1). The solids in the bowl are washed with demineralized water which is routed to the receiver tank (TK-12-1). The centrifuge bowl is calibrated for the solids content and the solids are slurried out of the centrifuge bowl to tank (TK-11-1) with the metathesis solution (sodium hydroxide-sodium carbonate). The cesium in the supernatant receiver tank (TK-12-1) is transferred to the centrifuge feed and receiver tank (TK-14-2) via the waste collection tank (TK-9-2) for cesium recovery.

The second batch of CAW is then transferred to the centrifuge feed tank (TK-11-2) (1,300 to 3,100 gal) and the entire process is repeated. Tank (TK-11-1) containing two cleanouts of the solid from the centrifuge bowl is treated for strontium removal in the metathesis process.

TABLE 6-1. Composition of PUREX Wastes.

| Constituent | Current acid wastes (CAW), M | Tank farm solutions (PSN), M | Acidified sludge (PAS), M |
|---|---|---|---|
| H | 1.3 | -- | 0.5 |
| Na | 0.4 - 0.7 | 6.0 | 0.9 - 1.0 |
| Fe | 0.15 - 0.25 | -- | 0.03 - 0.2 |
| Al | 0.15 - 0.25 | 0.02 | 0.1 - 0.3 |
| Zr | Negl - 0.03 | -- | -- |
| $SiO_3$ | 0.01 - 0.1 | -- | 0.002 - 0.01 |
| $NO_2$-$NO_3$ | 2.0 - 3.0 | 4.0 | 1.6 - 3.9 |
| $SO_4$ | 0.3 - 0.6 | 0.16 | 0.08 |
| $PO_4$ | 0.01 | 0.02 | 0.04 |
| $CO_3$ | -- | 0.86 | -- |
| F | 0 - 0.1 | -- | -- |
| SpG | 1.15 | 1.25 | 1.2 |
| Solid, vol% | 0.5 - 1 | <1 | 1 - 4 |

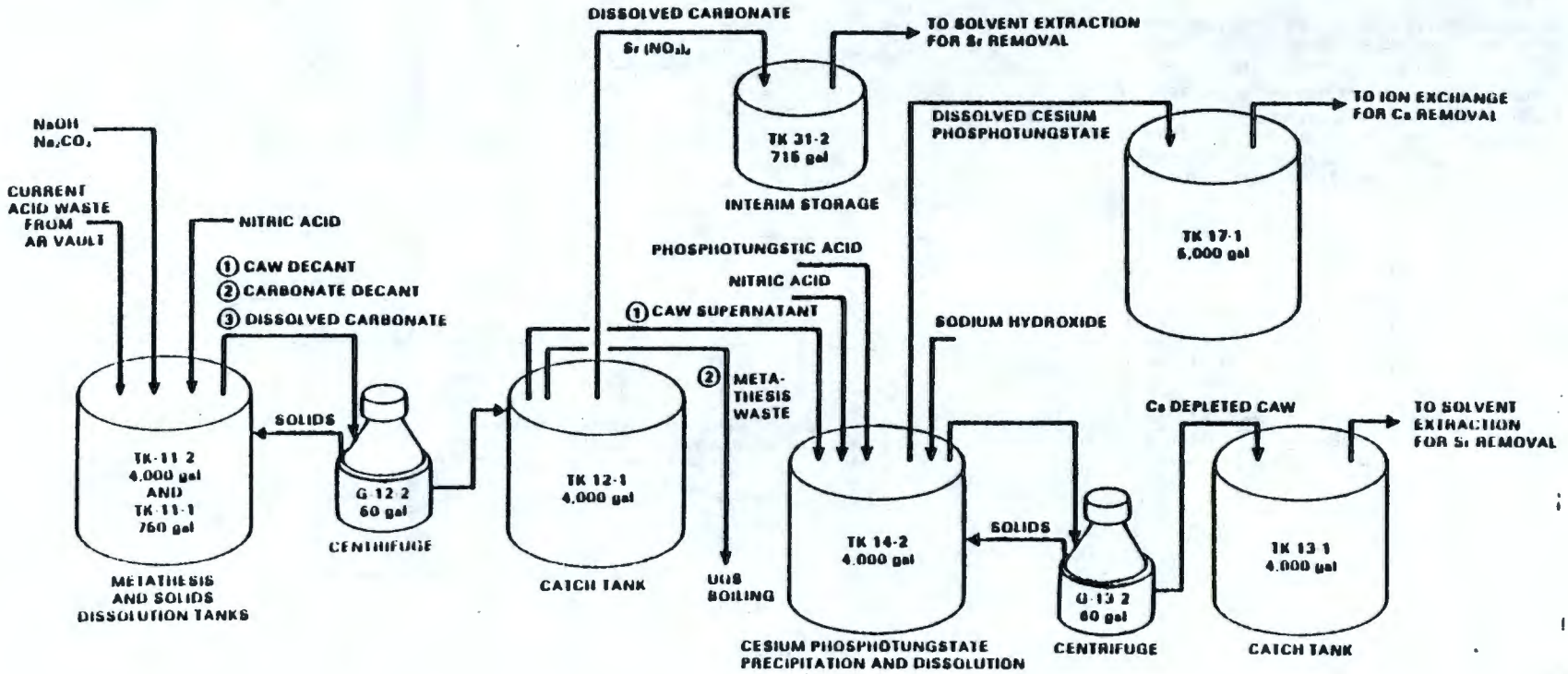


FIGURE 6-1. B Plant Head-End Process for Current Acid Wastes.

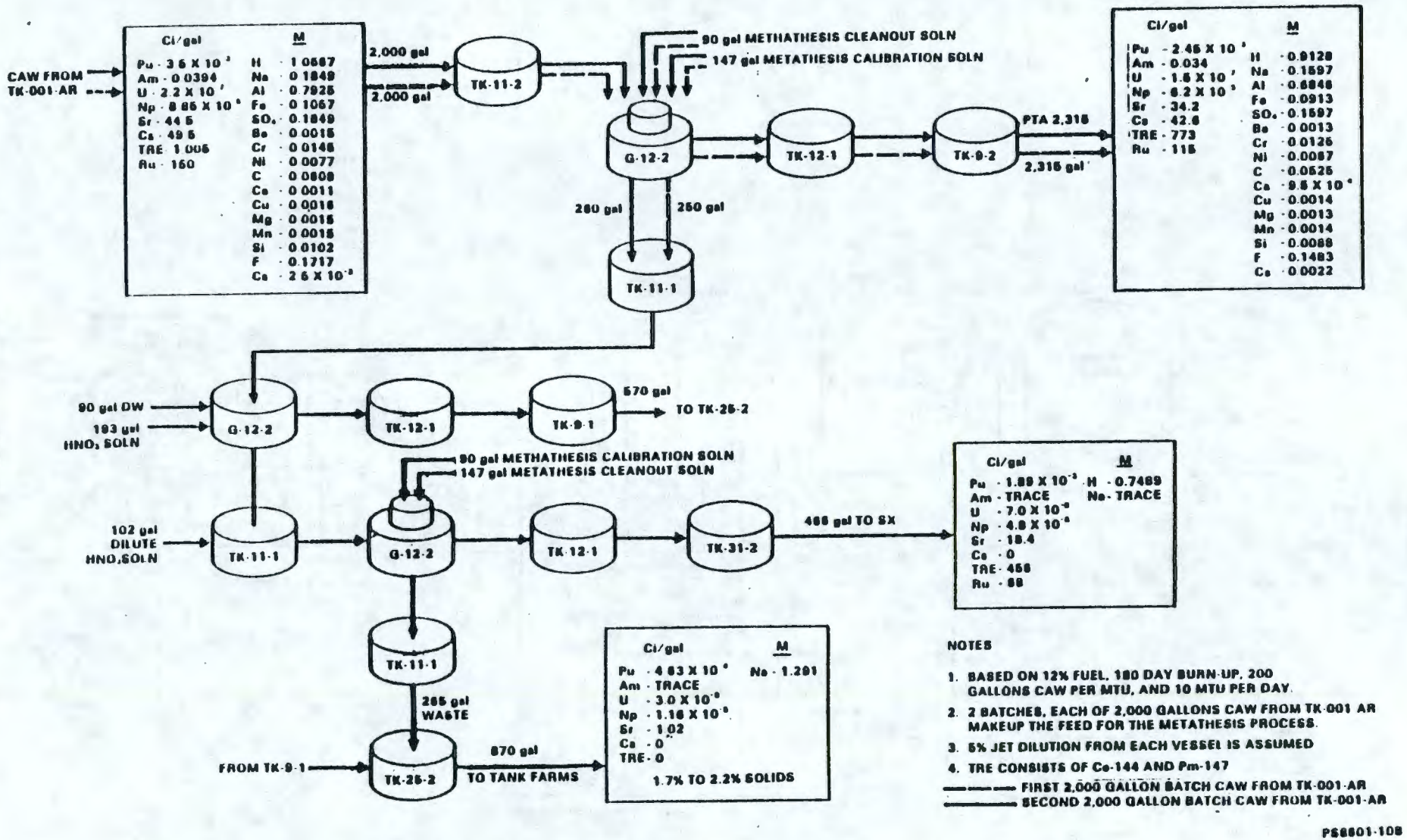


FIGURE 6-2. Head-End Metathesis Process.

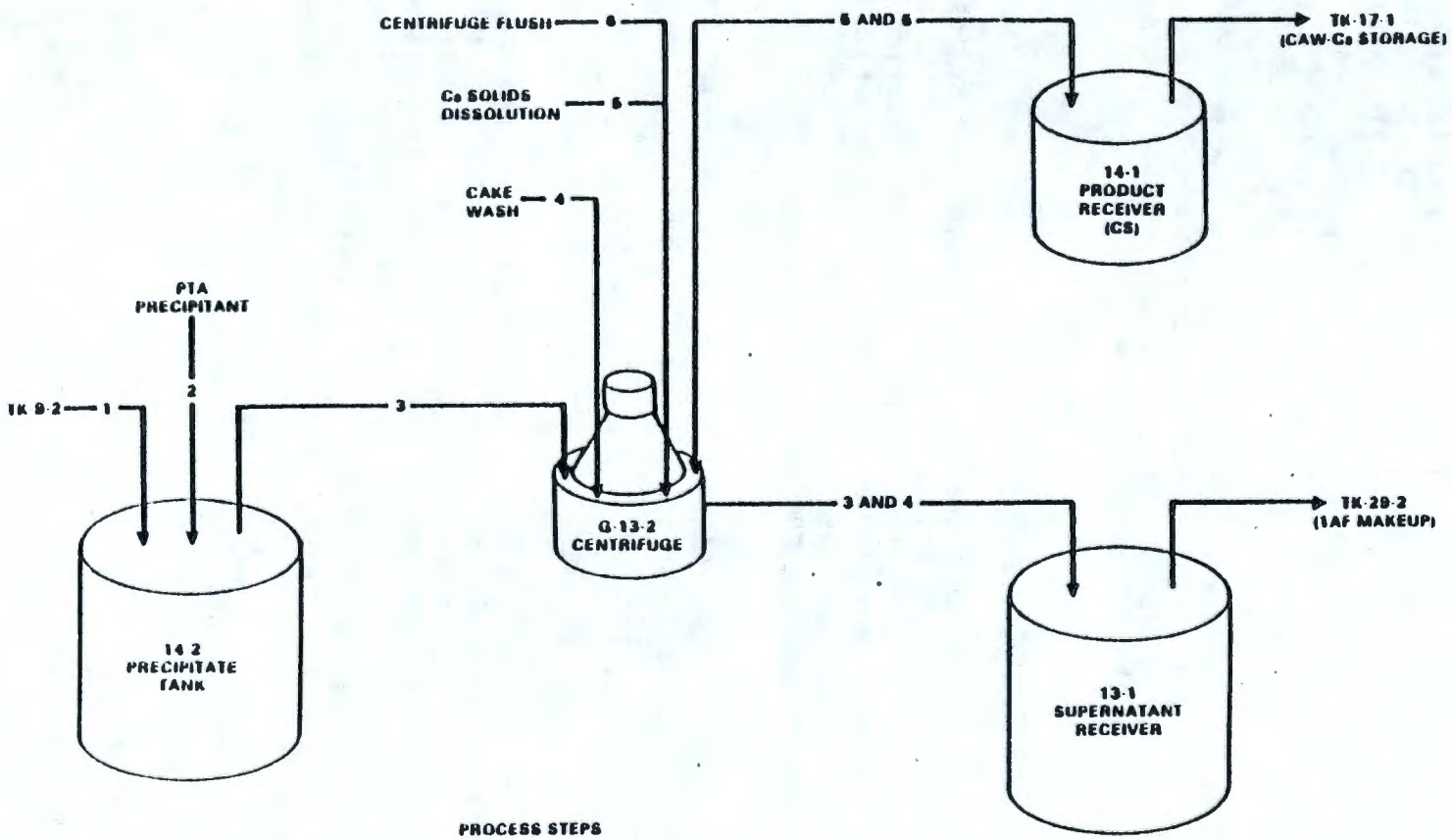


PS8601-109

FIGURE 6-3. Feed Preparation--Current Acid Waste.

In the metathesis process, the solids collected in the centrifuge feed tank (TK-11-1) are digested at 60°C for 2 h in the metathesis solution. This converts any insoluble strontium sulfate solids to soluble strontium carbonate solids. The metathesis slurry is processed through the (G-12-2) centrifuge where the $SrCO_3$ is collected. The metathesis supernatant is collected in the supernatant receiver tank (TK-12-1), acidified, and discarded as waste to tank (TK-25-2) via tank (TK-9-1). After a solids wash, the $SrCO_3$ is dissolved with nitric acid and slurried to tank (TK-11-1) along with the remaining inert solids. A final pass through the (G-12-2) centrifuge separates the inert solids which are disposed to underground storage and the strontium-bearing supernatant which is transferred to tank (TK-31-2) via tank (TK-12-1) as solvent extraction feed.

The CAW head end flowsheet is divided into two major sections; 1) clarification of CAW, and 2) metathesis process--strontium removal from the CAW residual solids. The function and procedures involved with these 2 major steps are discussed in the following sections.

### 6.2.1 Clarification of Current Acid Waste

The function of the clarification process is the separation of solids and the recovery of strontium from the solids separated from the CAW. The extraction of strontium prevents solids from entering the solvent extraction process and alleviating the operating difficulties in the pulse columns. Utilizing centrifugation, head end processing provides the initial feed preparation for B Plant wastes enabling removal and recovery of long-lived radioisotopes.

6.2.1.1 Clarification Process. PUREX CAW solution is jetted from the AR Vault tank (TK-001-AR) to the hold-up tank (TK-11-2). The feed volume is limited by the concentrations of solids in the feed. A batch size is proportioned to the concentration of solids in the wastes and a maximum batch size consists of 2,000 gal of PUREX CAW with 1 vol% of solids.

The crude CAW solution is centrifuged in the (G-12-2) centrifuge and the resulting CAW supernatant accumulated in the supernatant receiver tank (TK-12-1), from where it is jetted to the waste collection tank (TK-9-2) and held until the centrifuge feed and precipitation tank (TK-14-2) is available to receive the solution for the PTA process. The solids in the centrifuge bowl are washed with demineralized water from the scale tank (TK-12-2B) via the centrifuge (G-12-2) bowl sprays. Water washing enhances the removal and recovery of strontium and cesium remaining in the residual solids/supernatant occluded to the centrifuge bowl and the removal of strontium, iron, aluminum, and sulfate ion from the residual solids via leaching.

Following the processing of the water wash to the supernatant receiver tank (TK-12-1), the solids in the centrifuge (G-12-2) are volumetrically calibrated with metathesis solution from scale tank (TK-12-2C) via the centrifuge (G-12-2) bowl sprays. The maximum amount of solids in the centrifuge (G-12-2) is limited to 20 gal. As soon as the solids volume is known, the solids are cleaned out of the centrifuge with metathesis solution from



9 3 1 2 0 9 9 2 0 7 2

scale tank (TK-12-2B) via the centrifuge (G-12-2) bowl sprays, and the slurry is jetted to the centrifuge solution receiver tank (TK-11-1). After the slurry is completely transferred from the centrifuge solution receiver tank (TK-11-1), this procedure is repeated.

### 6.2.2 Metathesis Process

The function of the metathesis process is to remove and convert the insoluble strontium sulfate fraction of the PUREX CAW solids to soluble strontium carbonate. The strontium carbonate solids are dissolved in dilute nitric acid to make up part of the feed for the solvent extraction process.

6.2.2.1 Strontium Removal from Residual Solids. Two CAW clarification batches are combined for one metathesis batch. A maximum batch size consists of 2,000 gal of PUREX CAW with 1.0 vol% solids. The batch, proportioned to the concentration of solids in the wastes and the feed volume, is limited by the concentration of solids in the feed based on the maximum allowable amount of solids in the centrifuge (G-12-2) being limited to 20 gal.

The metathesis solution is comprised of 395 lb of demineralized water, 375 lb of 2.5M $Na_2CO_3$ and 95 lb of 50 wt% NaOH. The carbonate converts the acid-insoluble sulfate to acid-soluble carbonate and the sodium hydroxide accelerates the metathesis reaction and prevents degassing of the carbonate by providing a buffer for residual nitrate present in the calibration or clean-out solutions. The temperature is maintained at 60°C to promote a favorable digestion reaction kinetics for strontium sulfate to strontium carbonate conversion over a period of 2 h.

The "metathesized digest" slurry is centrifuged (G-12-2) to remove 98.5% of the solids from the slurry and the supernatant is transferred to the supernatant receiver tank (TK-12-1), where the supernatant is acidified to 1.0M $H^+$ by the addition of 3 lb of 57 wt% $HNO_3$/gal of waste from the scale tank (TK-12-1E). The metathesis supernatant is discarded as waste to tank (TK-25-2) via tank (TK-9-1).

## 6.3 PHOSPHOTUNGSTIC ACID PROCESS (Ref. 6-11, 6-12, 6-13, Fig. 6-3)

The highly insoluble cesium salts of the acid can be separated as silicomolybdate, silicotungstate, phosphomolybdate, and phosphotungstate. The latter two compounds are the most insoluble.

Two cesium salts, tricesium ($Cs_3PW_{12}O_{40}\cdot 2H_2O$) which is preferentially precipitated for PTA/Cs mole ratio <0.33, and the less soluble dicesium ($CS_2HPW_{12}O_{40}\cdot 2H_2O$) which is exclusively formed for PTA/Cs mole ratio >0.5, can be isolated.

Cesium is preferentially precipitated in a mixture of the ions of the neutral and acid salts of rubidium, ammonium, and to a lesser extent potassium and sodium. The soluble phosphotungstates such as iron, zirconium, and aluminum do not interfere in the precipitation of the cesium salt and traces are removed by washing with dilute nitric acid. The interference of the insoluble phosphotungstates of rubidium, potassium, ammonium, silver, and mercury (II) is controlled by limiting the quantity of PTA added. The phosphotungstate salts are unstable in a basic solution and break down into their constituents, phosphates, and tungstates. The precipitates are dissolved in either ammonium or sodium hydroxide solutions and purified by the ion exchange. Since phosphotungstate ions cannot be regenerated, its loss represents most of the chemical cost of the process.

The solubilities of the alkali phosphotungstates are essentially unaffected over the range of 2M to 10M $HNO_3$ concentration but decreases three-fold when the concentration is lowered from 2M to 0M. Solubilities of the acid phosphotungstate salts of cesium, rubidium, and ammonia in 2M $HNO_3$ and are 0.20, 0.25, and 0.78 g/L respectively at 20°C. The solubility of cesium phosphotungstates in 4M, 8M, and 12M $HNO_3$ is 0.00084, 0.00125, and 0.0017 g of Cs/L respectively at 25°C, and the effect of the variation of temperature in the range of 20 to 80°C on cesium solubility is not noticeable. However, an excess of 5 g of PTA/L (0.0016M) lowers the solubility of cesium by a factor of 13 in a 2M $HNO_3$ acid at 20°C.

### 6.3.1 Function

Cesium is precipitated from the CAW supernatant by utilizing the insolubility of cesium phosphotungstate in a mild acid solution. The process equipment is located in Cells 13 and 14 to obtain maximum utilization of the existing equipment and to obtain close coupling with CAW head end processing. The cesium phosphotungstate precipitation process is closely integrated with head end solids and solvent extraction operations as indicated in Figure 6-4.

### 6.3.2 Precipitation

The cesium is precipitated by adding 400 to 600 lb of 0.1M PTA to the precipitate tank (TK-14-2) from the gallery scale tank (TK-14-2A). The molar ratio of PTA to cesium based on operational experience is tentatively established at 1.2M to 1.5M and may be changed contingent on laboratory results. The cesium solids slurry is digested for at least 1 h at 45 ± 5°C.

### 6.3.3 Centrifugation of Cesium Solids

The solids slurry in the precipitate tank (TK-14-2) is jetted at 10 gpm into the (G-13-2) centrifuge rotating at 1,740 rpm. The cesium solids are collected in the centrifuge bowl and the supernatant overflows to the supernatant receiver tank (TK-13-1).



9 3 1 2 8 9 9 2 0 7 4

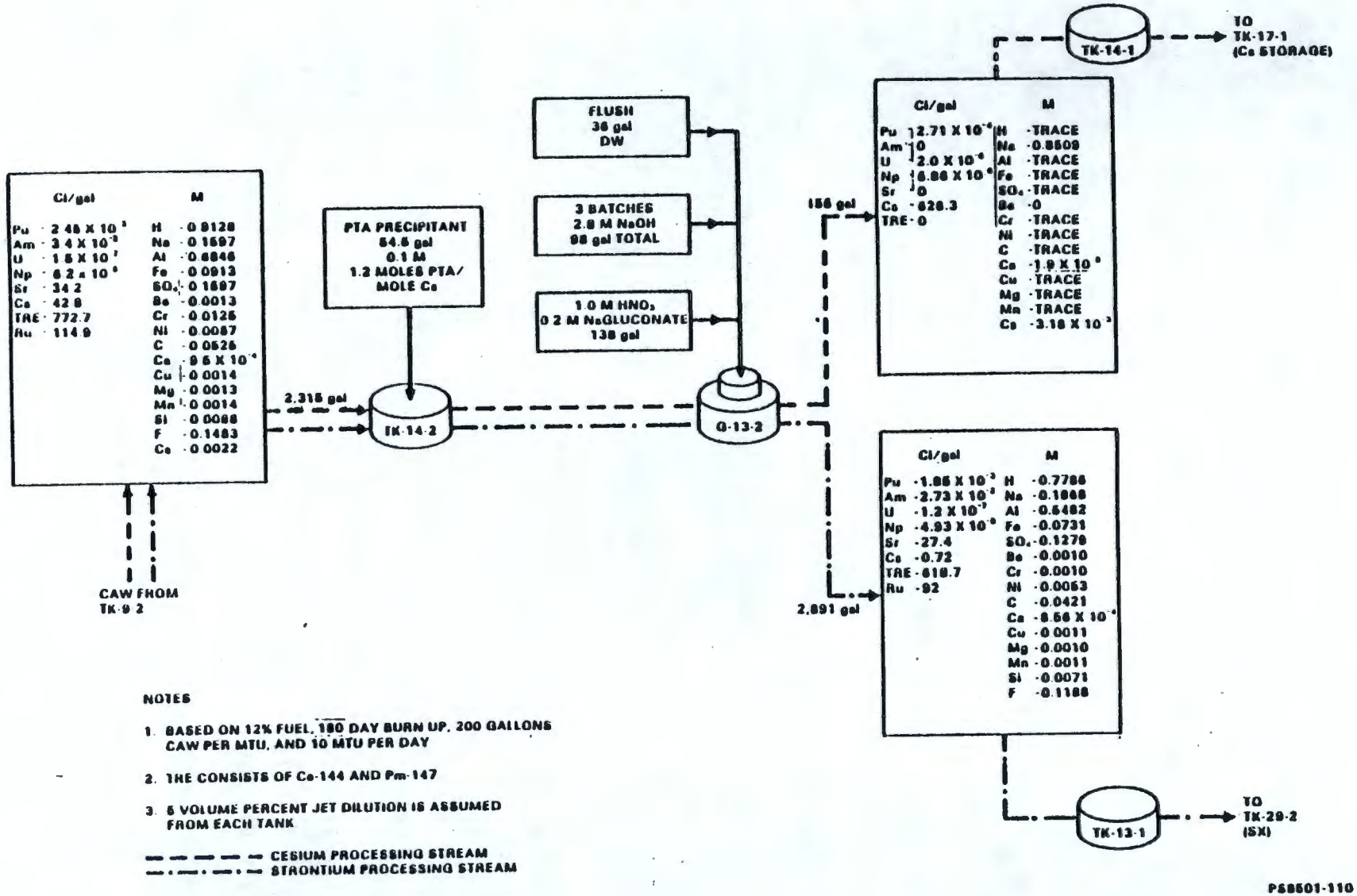


FIGURE 6-4. Cesium Recovery by Phosphotungstic Acid Precipitation.

6.3.3.1 Cake Wash. The cesium solids cake in the centrifuge (G-13-2) is washed three times with a 400 lb 1.0M $HNO_3$ - 0.2M sodium gluconate solution to remove strontium solution and metallic impurities from the cake. The wash solution is also collected in the supernatant receiver tank (TK-13-1).

6.3.3.2 Cesium Solids Dissolution. The cesium solids are dissolved by adding 450 lb of 2.0M NaOH solution to the centrifuge (G-13-2) and digesting for 1/2 h. The solution is then jetted to the product receiver tank (TK-14-1).

6.3.3.3 Centrifuge Flush. The centrifuge is flushed by two additional 205 lb batches of NaOH cleanout solution to the centrifuge (G-13-2) and by jetting them to the product receiver tank (TK-14-1). A calibration or flush of any remaining solids is done by adding water to the bowl and jetting it to the product receiver tank (TK-14-1). The PTA product is then transferred to the CAW-cesium storage tank (TK-17-1) for storage before being processed by ion exchange.

6.3.4 Safety Consideration and Off-Normal Conditions

6.3.4.1 Operation of the High-Pressure Pump. The acidic gluconate wash solution is added to the centrifuge through sprays using the (P-13-2A) pump. This pump delivers at a high rate and high pressures, and extreme care should be exercised at all times when the pump is in operation. The pump is not operated without its protective covering. Because of the high rate of delivery, an operating time limit of 80 s has been placed on the pump to avoid overflowing the centrifuge bowl or emptying the tank (TK-13-2A).

6.3.4.2 Vessel Vent System. Tanks (TK-29-2) and (TK-13-1) are on vessel vent system two and one respectively and a 300-gal seal must be maintained in (TK-13-1) at all times to prevent cross-contamination.

6.3.4.3 Corrosion. The corrosion effects of the PTA investigation during the last CAW campaign uncovered leaks at the bottom of the pipes, apparently due to stagnation of undiluted acid and considerable corrosion at the welds on the inside of the pipe. The only equipment which experiences concentrated PTA and cannot be flushed is (TK-H-301) and the connecting header to scale tank (TK-14-2A). The entire line between (TK-H-301) and the wall nozzle to Cell 14 from scale tank TK-14-2A was replaced by a new KYNAR header within 1 1/2 yr from the first sign of corrosion. Proper flushing and inspection of the system is necessary for the prevention of corrosion.

6.3.4.4 Product Transfer to Storage. Misrouting the product from (TK-14-2) to (TK-13-1) or (TK-17-2) and virtually any other vessel could severely contaminate the product. Extreme care must be taken to use proper transfer jets to prevent inadvertent solution routings. Also a leak in the product route to (TK-14-1) must be guarded against to prevent excessive loss of product.

9312869020796

## 6.4 CESIUM PURIFICATION BY ION-EXCHANGE (Ref. 6-11, 6-15 through 6-20)

Two stages of the ion-exchange process, the initial step in Cell 18 and the final in Cell 38, are used to separate and purify cesium for WESF from the PTA product stored in the CAW-cesium storage tank (TK-17-1).

Ion-exchange process is a reversible chemical reaction in which stoichiometrically equivalent amounts of ions are exchanged between electrolyte in solution contacted with an insoluble electrolyte (Ref. 6-21, 6-22). Ion-exchange media, forming the virtually insoluble electrolyte in most aqueous and non-aqueous media, consists of non-diffusable positively or negatively charged ionic resin with an equivalent number of exchangeable ions possessing opposite charge to impart electroneutrality to the resin (Ref. 6-22).

Stoichiometric equations for cation exchange are written as follows:

$$M^+ + XR \longrightarrow X^+ + MR$$

where M and X are the exchangeable ions and R is the anion. For anion exchange, this is written as:

$$A^- + RB \longrightarrow B^- + RA$$

where $A^-$ and $B^-$ are the involved anions.

A fixed-bed column process is employed for the separation and purification of cesium. A solution containing exchangeable ions, fed into the top of the fixed-bed ion-exchange media supported on a porous base, will essentially exchange all of these ions with the mobile ion of the same sign in the exchange ion-exchange media in a comparatively narrow zone at the top of the bed. The solution percolates through the rest of the column carrying the mobile ion of the ion-exchange media without any further change in composition. As the feed solution is continued, the upper layers of the bed are completely "exhausted" to form a saturated zone containing the ion in the feed solution; no further exchange occurs and ion-exchange zone is displaced farther down the column. Ultimately, the ion-exchange zone reaches the bottom of the column and the exchanging ions in the feed stream show up in detectable quantities in the effluent. Such an effluent concentration history, which is a characteristic of the fixed-bed behavior, is called "breakthrough curve" (Fig. 6-5).

The regeneration of the column is accomplished by the reversal of the exchange process by the treatment of the exhausted resins with a concentrated solution containing the original mobile ion that is incorporated into the ion-exchange media.

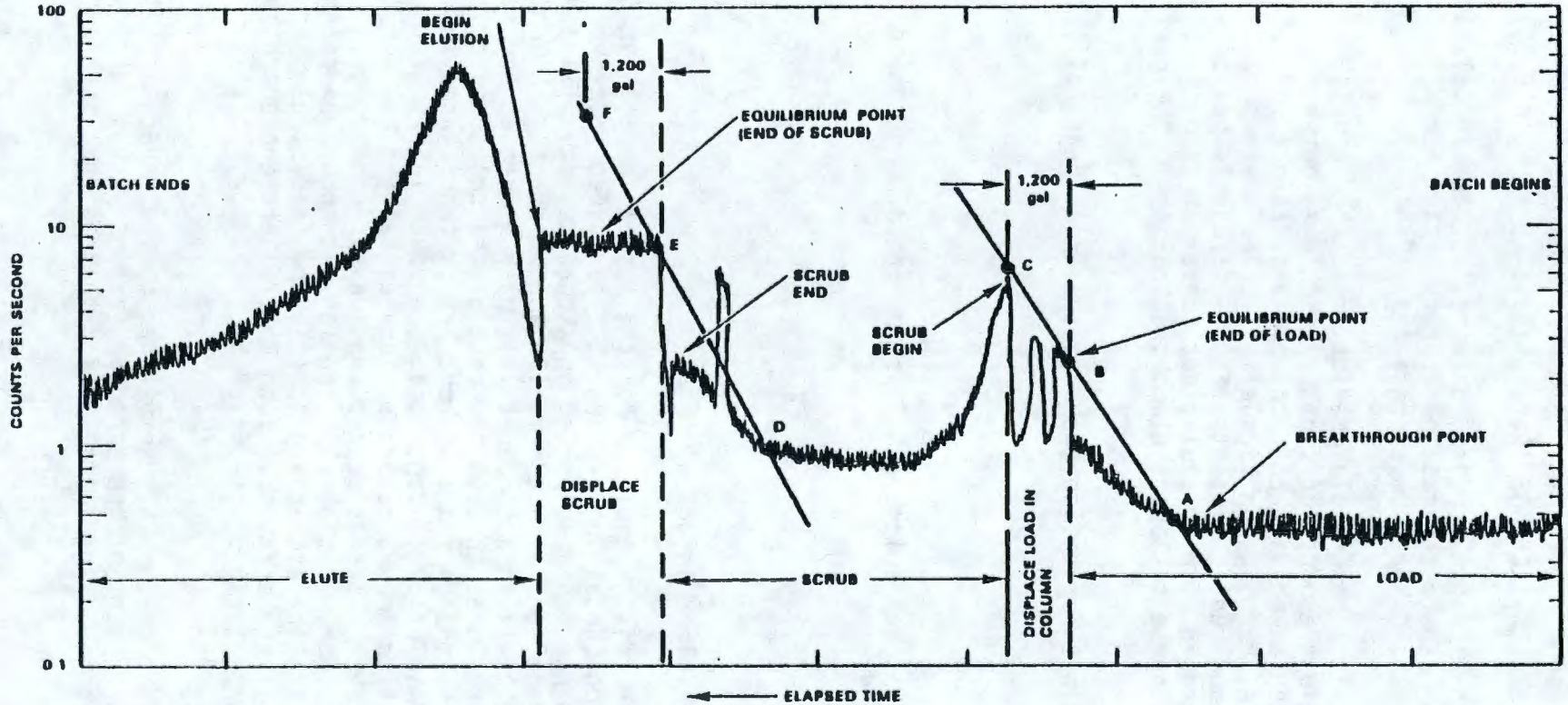


PS8501-111

FIGURE 6-5. Gamma-Monitor Strip Chart (typical).

The removal of radionuclides by ion-exchange media is affected by a number of variables. These variables include cross-linkage, resin-particle size, feed flow rate, pH of the feed, extraneous salts in the feed, colloidal material in the feed, resin-bed composition, resin-bed depth and temperature.

The degree of cross-linkage in an ion-exchange media determines its porosity, stability, and solubility. A change in the porosity of an ion-exchange resin affects its rate of ionic diffusion and thus its rate of exchange.

There is no appreciable difference in the removal of gross-fission-product activity obtained at 2 gpm/ft of resin (4.5 $L/s/m^3$ of resin), the manufacturer's recommended flow rate and a rate five times as large.

The volume of feed which may be decontaminated per cycle by the ion-exchange media bed is determined by the total ionic content of the feed. When the ionic capacity of the resin has been spent in the absorption of ions, either active or inactive, good decontamination of the feed is not possible, although in some cases selective absorption of the radioactive ions may continue. The concentration of total ions in the feed is therefore a very important factor in determining the volume of waste that may be treated per unit volume of the ion-exchange media per cycle.

The apparent capacity of the bed is substantially reduced by the presence of un-ionized materials such as organic colloids or iron or nickel compounds present in the feed which carry away ions that can be exchanged.

Two techniques quite useful in the operation of an ion-exchange system are conductivity measurement and gamma scanning. The effluent from an ion-exchange unit can be put through a continuous recording conductivity cell; the cell readings can usually be counted on to signal approaching break-through. A simple gamma scan is also useful and used in determining the degree of ion-exchange-bed loading for gamma-emitting radioisotopes present in the feed solution.

### 6.4.1 Determination of Breakthrough During Loading and Elution

The gamma-spectrometer (Ref. 6-12, 6-24, 6-25) monitors the ion-exchange effluent stream for instantaneous printout by the null-balance, servo-operated potentiometric strip-chart recorder. The gamma-ray peak energy of 0.662 Mev for $^{137}Ba$, an isomeric transition (95%) product of $^{137}Cs$, is selected and continuously monitored by the pulse height analyzer between the range of 0.647 and 0.687 Mev. The gamma-spectrometer consists of the monitor probe encasement and the detector assembly along with the high-voltage power supply, linear amplifier, pulse height analyzer, baseline sweep and the count rate meter with a recorder. The monitor probe encasement assembly is a collimating pipe that penetrates the 9-ft concrete wall separating the radioactive process cell and a nonradioactive zone, the electrical gallery, with a detector assembly consisting of an americium doped sodium-iodide (thallium-activated) crystal.

Under non-equilibrium conditions leakage occurs at an earlier point, and the concentration history lacks the definitive sharpness usually observed under an equilibrium process. The slope of the breakthrough curve is linear on a semi-log scale chart of the recorder and is a function of the resin properties and feed conditions. The gamma-spectrometer is calibrated using a typical 1 Ci/gal $^{137}Cs$ concentration which translates into the monitor reading range of ~70 to 150 cps.

6.4.1.1 Load Volume. The first load is determined by a breakthrough around 20 to 30 cps to limit the standard loss to <1% of cesium. The loading loss is the number of kCi that are not absorbed by the ion-exchange resin but pumped to the cesium waste tank.

6.4.1.2 Cesium Elution. The cesium lost during scrub is minimized and sodium removal maximized to maximize cesium recovery during elution. Recycle percent is inversely proportional to cation/Cs ratio and the trade-off occurs around cation/Cs ratio <50.

6.4.1.3 Calculation of Cesium Lost During Loading and the Percent Recycle (Fig. 6-5). A straight line drawn through the breakthrough (A) point on the semilogarithmic scale chart or the lowest scrub point (D) and the equilibrium point (B) highest or the scrub point (E) is extended 1,200 gal to account for the column volume held up that will not pass the monitor to the points (C/F), respectively.

Average count/s (Ave. cps) = [(C/F) - (A/D)]/2

$$\text{Ci (lost during load/recycle)} = \frac{\text{Average cps*flow-gal/min*t-(min)}}{\text{Monitor check-[cps/(Ci/gal)]}}$$

Percent (loss during load/recycle)
= [Ci (lost during load/recycle)]/100/Ci feed

6.4.1.4 Product Quality. For accountability, percent of total cesium recovered is needed. This is calculated as:

Percent recovery = kCi Cs in (19-1)*100/(kCi feed + recycled previous batch)

6.4.2 Ion-Exchange Media for Cell 18 and Cell 38 Ion Exchange Processes (Ref. 6-16)

6.4.2.1 Ion-Exchange Resin. The ionic character of the resins is primarily determined by the large polar groups held together by a three-dimensional hydrocarbon network, such as the sulfonic, carboxylic, phenolic or phosphonic groups for the cation exchange resins and the primary, secondary,

and tertiary amine and the quaternary ammonium groups for the anion exchange resins, and is quite independent (except for the physical properties) of the non-polar portion of the resin structure.

The ion-exchange resins are generally classified according to the nature of the fixed ionic group contained in the insoluble and infusible polymer matrix (Ref. 6-21). Although both polymer and ionic groups vary considerably, the resins are grouped into four chemical classifications: strong and weak acid cation/base anion exchange resins.

6.4.2.1.1 Duolite Resin. Duolite ARC-359, an organic resin containing phenolic and methylsulfonic acid groups that act as a cation exchange site for various cations to give the resin its ion exchange properties, is manufactured by the Rohm and Haas Company. Based upon previous tests, the ratio of phenolic to methylsulfonic acid sites was determined to be 1.3 to 1.4. The general mechanism of the cation exchange is the replacement of the cations of the phenolic and methylsulfonic group by the sodium ion, sodium by cesium, cesium by ammonium and the ammonium by sodium to complete the ion exchange cycle. Phenolic groups are active at pH >12 and $OH^-$ concentrations above 0.6, otherwise only sulfonic sites remain active.

Both aluminum and iron ions, form insoluble hydroxides within the pH range of 6 to 11, but are soluble at a pH range <1 or >12, and are chelated with HEDTA to prevent their precipitation when present in significant quantities.

- Destruction of Duolite ARC-359 Resin with Nitric Acid (Ref. 6-26). The strength of the nitric acid and the operating temperature of the ion exchange column are controlling factors in the destruction of the resin by dissolution. The rate of off-gas release was reduced from 25.6 to 1.67 cc/min/g-resin due to a change in the acid molarity from 15.7M to 6M. Reaction at temperatures of 55°C or less had off-gas rates below 2 cc/min/g-resin. The maximum off-gas rate as well as the maximum temperature occurred at a longer time interval after the addition of acid in vessels containing larger (acid volume/resin) ratios. The destruction of 1 g resin in 10M $HNO_3$ required about 9.5 millimoles of acid.

- Exposure of Duolite ARC-359 to Caustic Solution (Ref. 6-27). Duolite ARC-359 was periodically checked for swelling and tendency to agglomerate and become non-fluidizable. The 40-d-testing period indicated a tendency for the resin bed to fluidize but the volume remained at 51 mL (as measured in a graduated cylinder). Quantitative hardness or compression tests were not made on the resin particles, but (qualitatively) there was no noticeable "softening" of the particles.

Experimental procedures recommended in the Duolite Ion-Exchange Manual (Ref. 6-23) were used to determine the moisture retention capacity for conditioning and wet screen analysis for fracturing of the resin exposed for 40 d to 12M NaOH.

For comparison, determinations were made of the moisture retention capacities of unused resin and resin which had been in contact (static) with 1M NaOH for 43 d. According to the manufacturer, an increase in moisture retention capacity is an indication of chemical attack on the resin.

The results of the tests of the moisture retention capacity and wet screen analysis for fracturing of the resin showed no swelling (above that of the $Na^+$ form in the 1M NaOH), no tendency to agglomerate or otherwise become non-fluidizable, no increase in moisture retention capacity and did not fracture to any significant extent.

- Loading Capacity. The maximum loading capacity was determined as 3.0 MCi and the rationale to increase the loading capacity from 2.0 to 3.0 MCi (Ref. 6-29) was based upon the advantages that less radiation exposure to resin (Ref. 6-30) would occur giving more megacuries processed per resin change-out, less processing time due to decrease in scrub time from increased cesium displacement of sodium during loading, and reduction in waste volume to the collector, neutralizer, and concentrator and tank farm.

6.4.2.2 Zeolons (Ref. 6-76, 6-77). Zeolons are a family of crystalline alumino-silicate compounds, some synthetic and some naturally occurring, with extremely uniform pore openings which make them highly effective molecular sieves. Intercrystalline pore of remarkable uniformity together with excellent chemical stability qualifies Zeolon Molecular Sieves to adsorb effectively in systems where other adsorbents would operate haphazardly or fail completely through chemical deterioration. Zeolon molecular sieves possess a preference for polar or polarizable molecules and they can adsorb molecules based on polarity in addition to size and configuration.

6.4.2.2.1 Zeolon-900 (Ref. 6-28). This is a self-bonded synthetic alumino-silicate (mordenite structure) inorganic cation exchanger produced by the Norton Company and selected for the final cesium purification because of its favorable selectivity, capacity and resistance to radiation and chemical attack. These materials are available in the synthesized sodium form and the hydrogen exchanged form with the following chemical composition:

$$M_{8/n} \cdot Al_8 \cdot Si_{40} \cdot O_{96} \cdot 24H_2O$$

where

M = sodium hydrogen or other exchangeable cation having a value n.

Zeolon 900 (with silica/alumina ratio of 10:1) are manufactured by acid treatment. Their stability is excellent in environments for the pH as high as 12 with evidence that they can withstand even more severe conditions.

- Effect of Temperature (Ref. 6-78). The effect of temperature on upflow elution of a zeolite column with 8M $NH_4^+$, 3M $CO_3^=$, 2M $OH^-$ was determined by loading the column to about 5% breakthrough, then eluting the column with the ammonium solution. Cesium is more easily eluted from the zeolite at higher temperatures. At temperatures above 50°C, the vapor pressure of the ammonium carbonate solution causes excessive gas formation, resulting in poor elution.

- Effect of pH (Ref. 6-78). Zeolites are much more stable in weakly-acidic or -alkaline solutions than previously suspected. Acidic or alkaline solutions from pH 1 to 14 may be used to flush a zeolite column without adversely affecting the ability of the material to absorb cesium. The strength of zeolites is not reduced by solutions between pH's 1 and 14.

6.4.3 Cell 18 - Ion Exchange Process (Ref. 6-11, 6-24, 6-31, 6-32; Fig. 6-6)

Clarified solutions from the PTA cesium centrifugations, collected in the centrifugal receiver tank (TK-14-1), are transferred to CAW feed storage tank (TK-17-1), where the aluminum and iron are complexed by adding 1.1 mol HEDTA per mole of complexible cations in a feed having an initial pH <5.0. The excess complexant will result in 10% excess in the final makeup to assure that the metallic cations are complexed.

6.4.3.1 Feed Makeup. Ion exchange feed is made up in supernatant feed receiver tank (TK-17-2). Initial feed batches, each containing ~2 MCi of cesium (subsequent batch sizes may be varied) are made up from the PTA product held in feed storage tank (TK-17-1). The makeup volume is then adjusted to 1,000 gal with demineralized water, and the pH is adjusted to 6 ± 1 with 2.5M $Na_2CO_3$.

6.4.3.2 Feed Loading. The ion exchange feed made up in feed storage tank (TK-17-2) is pumped downflow through the ion exchange column (T-18-2) via the feed tank (TK-18-3). The loading effluent is collected in the waste pump tank (TK-18-1) and routed to the low-level waste collector, neutralizer, and fed to the concentrator tank (TK-24-1) for disposal. Loading is terminated when the feed storage tank (TK-17-2) is empty, or the ion exchange effluent monitor (RR-18-2-3) reading reaches a predetermined count per second level.

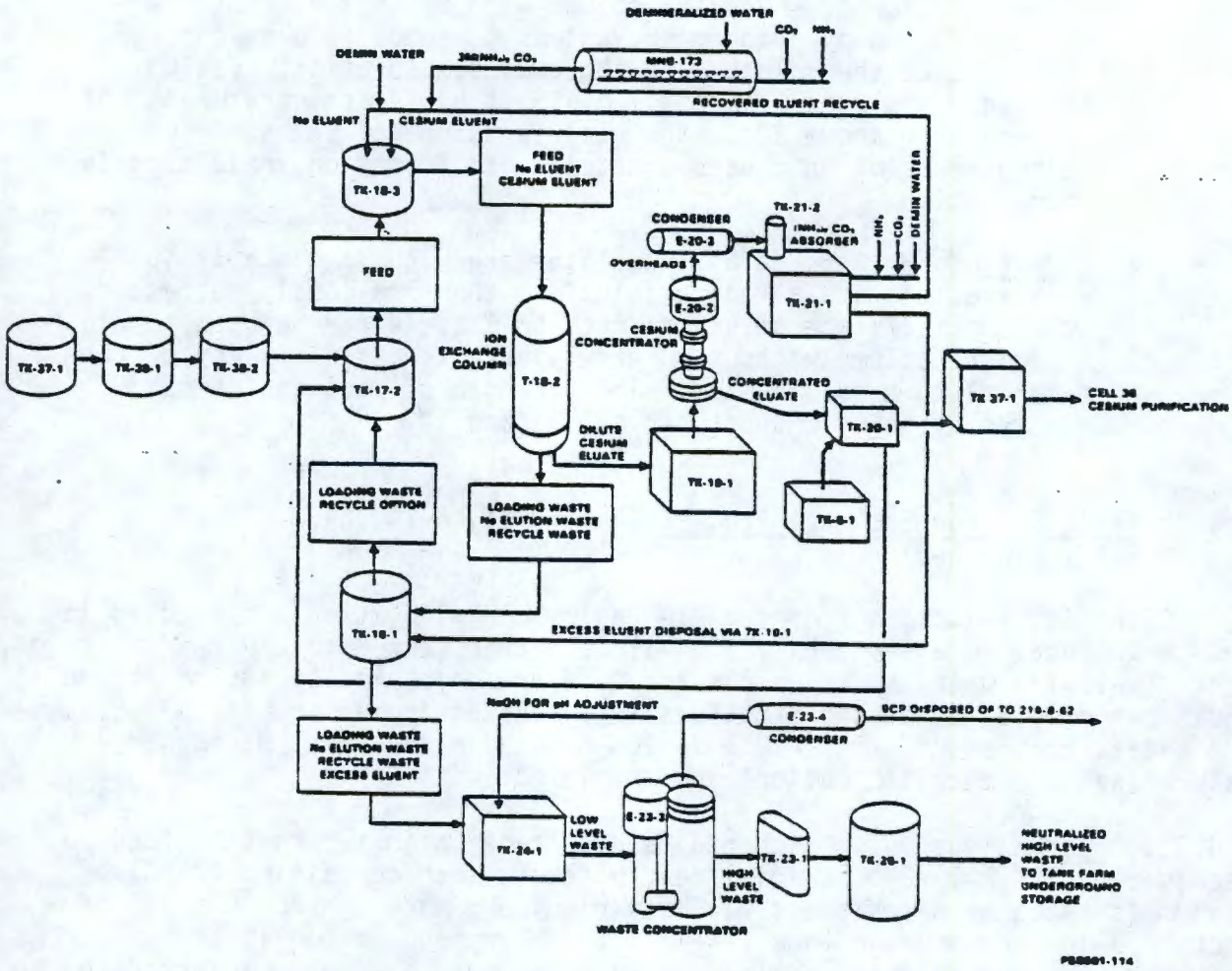


FIGURE 6-6. First Cycle Cesium Purification Flow Diagram.

Following the load, 2,000 gal of demineralized water is added to feed storage tank (TK-17-2) to displace the residual feed. This water wash is collected in the waste pump tank (TK-18-1) and routed to low-level waste collector tank (TK-24-1) for disposal.

6.4.3.3 Sodium Scrub. Solution for scrubbing sodium from the column is made up in the feed tank (TK-18-3) by diluting ammonium carbonate from (TK-MNB-173) or cesium eluent makeup and storage tank (TK-21-1) with water to 0.20M ± 0.05M. The scrub solution is pumped from feed tank (TK-18-3) downflow through the ion exchange column (T-18-2) at a rate of up to 40 gal/min and the scrub effluent collected in the waste pump tank (TK-18-1) is routed to the concentrator tank (TK-24-1) for disposal. The terminal point for the scrub is based on a predetermined effluent monitor reading.

6.4.3.4 Cesium Elution. Eluent (6M $NH_4^+$ - 3M $CO_3^=$) is made up in cesium eluent makeup tank (TK-21-1) or (MNB-17-3) and pumped downflow through the ion exchange column (T-18-2) via tank (TK-18-3). The eluate, containing the eluted cesium, is routed to eluent receiver tank (TK-19-1). The elution is terminated when the radiation monitor (RR-18-2-3) reading has fallen below a specified level. Following the elution, the residual eluent in the column is displaced to eluent receiver tank (TK-19-1) with 1,500 gal of demineralized water.

6.4.3.5 Product Concentration and Eluent Recovery. The concentrator (E-20-2) is started up with demineralized water. The eluted cesium solution in eluent receiver and storage tank (TK-19-1) is fed to the concentrator and the overheads condensed in the (E-20-3) condenser are collected in the cesium eluent storage tank (TK-21-1). Cesium product is concentrated to 0.4M cesium carbonate (approximately two ion exchange batches in the concentrator (E-20-2), cooled, and jetted to cesium concentrate receiver tank (TK-20-1), via the concentrate receiver tank (TK-5-1).

6.4.3.6 Product Evaluation. A bulk (1.6 mL pig) sample of the concentrated product, collected in tank (TK-20-1) is obtained prior to transfer to tank (TK-37-1) to determine mole ratio of (Na + K + Rb) to cesium and the volume percent of solids of the sample. The product is acceptable and used as the next feed for Cell 38 cesium purification process if the mole ratio and the solid contents are <0.1 mL solids in a 25 mL sample; otherwise it is transferred to tank (TK-17-2) for reprocessing.

6.4.3.7 Waste Handling. The loading and scrub wastes are segregated, collected and sampled from the cesium waste tank (TK-38-2) and transferred to the aged supernatant feed receiver tank (TK-17-2) for recycle if the curies content is >0.5 Ci/gal or transferred to low-level encapsulation waste tank (TK-39-1) for disposal to underground storage with neutralized waste.

6.4.4 Cell 38 - Ion Exchange Process (Ref. 6-25, 6-33; Fig. 6-7)

6.4.4.1 Feed Makeup. Crude cesium is transferred from cesium product storage tank (TK-37-1) and diluted with demineralized water in the feed tank (TK-38-1) to ~0.12M - 0.14M Cs. The solution is agitated by air sparging and sampled prior to the loading step if required.

6.4.4.2 Feed Loading. The cesium feed solution is pumped downflow through the (T-38-5) column and the retention of cesium on the ion exchange medium allows the removal of cation impurities during the scrub step. The waste effluent is collected in the cesium waste or recycle tank (TK-38-2 or TK-38-3), sampled, and transferred either to the low-level encapsulation waste tank (TK-39-1) or the aged supernatant feed receiver tank (TK-17-2) based on the cesium concentration.

6.4.4.3 Scrub. The scrub step removes the cation impurities (sodium, potassium, and rubidium) from the Zeolite matrices with minimal cesium losses, to meet encapsulation feed specifications (0.15 molar ratio of [Na + K + Rb] to Cs) (Ref. 6-27). Dilute ammonium carbonate scrub solution (0.15M) is made up in the feed tank (TK-38-1) by diluting the strong eluent (3M $[NH_4]_2CO_3$) from the ammonium carbonate tank (TK-MNB-173) with demineralized water. Normally, 900 to 1,000 gal of scrub solution in three batches is required for effective removal of cation impurities. The scrub solution is pumped in the same direction as loading through the (T-38-5) ion exchange column and the waste effluent is routed to cesium waste tank (TK-38-2). Each scrub waste batch is sampled from the waste tank (TK-38-2) and is transferred either to low-level encapsulation waste tank (TK-39-1) or aged supernatant feed receiver tank (TK-17-2) based on the cesium concentration. Waste routed to low-level encapsulation waste tank (TK-39-1) is eventually processed through the waste concentrator (E-23-3) and waste routed to aged supernatant feed receiver tank (TK-17-2) is reworked through Cell 18 ion exchange for cesium recovery.

6.4.4.4 Cesium Elution. The function of the elution step is to remove and recover the cesium from the ion exchange column (T-38-5). Strong ammonium carbonate [3M $(NH_4)_2 CO_3$ - 1M $NH_4OH$] eluent is pumped batchwise to feed tank (TK-38-1) from ammonium carbonate tank (TK-NMB-173). The eluent is pumped countercurrent to the direction of the load and scrub solutions through the ion exchange column (T-38-5) and the resulting eluate is routed to an already boiling concentrator (E-38-6) for product volume reduction. The elution is continued with additional eluent batches transferred into the feed tank (TK-38-1) until cesium elution is considered complete as indicated by the gamma monitor reading decreasing to a specified value (normally 1,600 to 2,000 gal of eluent will be required). After termination of the elution, a 150 gal water push is conducted to displace residual eluent from the ion-exchange column (T-38-5) to the concentrator (E-38-6).

6.4.4.5 Concentration and Eluent Handling. The concentration of cesium from the elution step allows for better product handling. Ammonium carbonate, boiled off from the concentrator (E-38-6), condensed by the condenser (E-38-7), is routed to TK-19-1 for recovery of cesium or subsequent

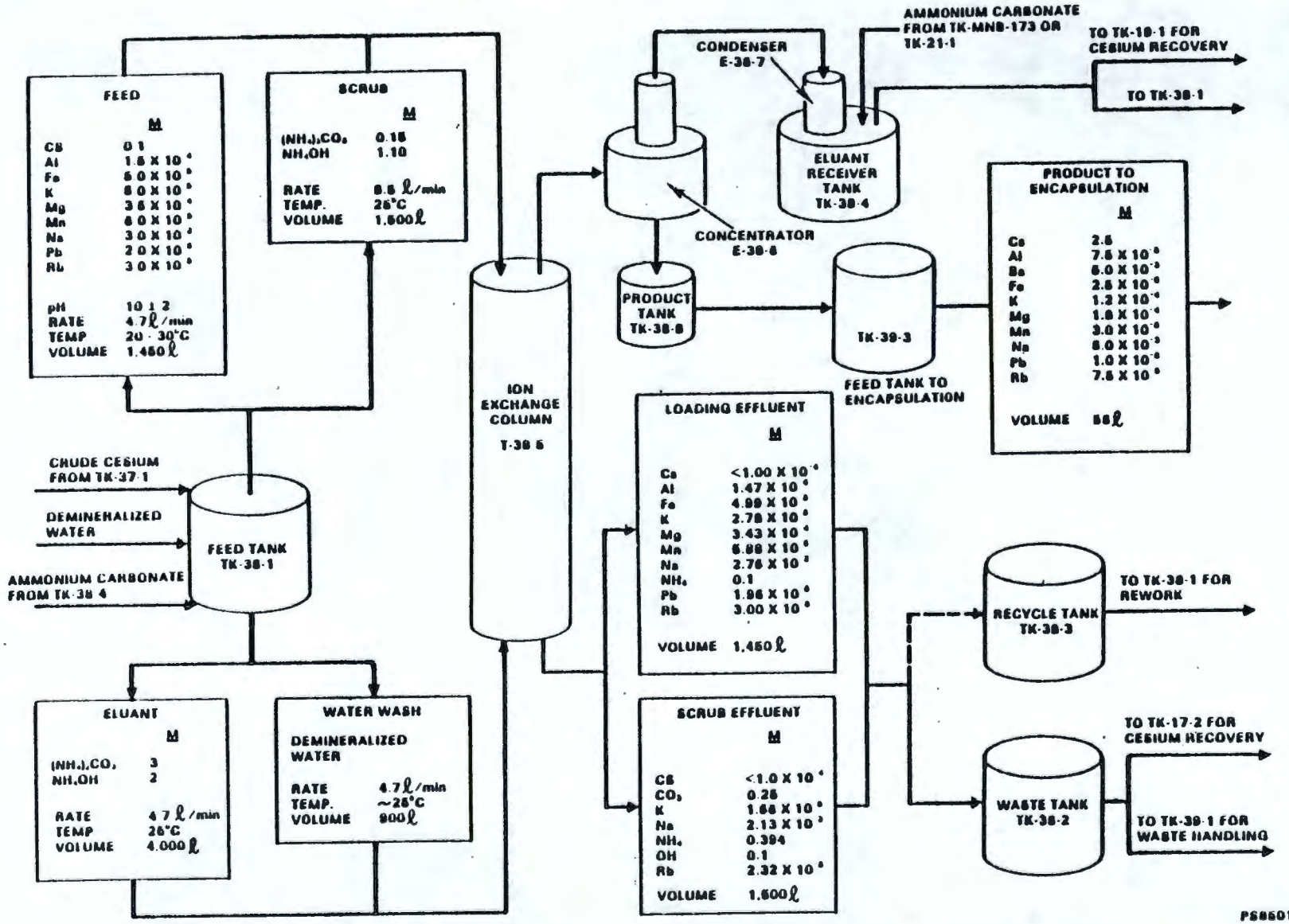


FIGURE 6-7. Final Cycle Cesium Purification Flow Diagram.

disposal. The elution rate is limited to 1 to 1.5 gpm maximum, because the maximum boiloff rate is the limiting step, and collected in the eluent receiver tank (TK-38-4).

The (E-38-6) product concentrator is filled with demineralized water and then brought to boiling. The cesium elution is started and the resulting eluate is transferred to the concentrator (E-38-6). Several feed batches are subsequently collected in the concentrator. The strong ammonium carbonate solution decomposes to $NH_3$ and $CO_2$ vapors and is subsequently recovered as spent eluent through the condenser (E-38-7) to eluent receiver tank (TK-38-4), from where it is routed batchwise to eluent receiver and concentrator feed tank (TK-19-1). The spent eluent is eventually processed through the waste concentrator (E-23-3).

6.4.4.6 Cesium Product Handling. When the specific gravity limit or the desired cesium inventory is reached, the product solution is jetted from the concentrator (E-38-6) through the cesium product receiver tank (TK-38-8) to encapsulation cesium feed tank (TK-39-3), followed by water flushes, and allowed to simmer by decay heat at 90 $\pm$ 5°C to bring the cesium molarity up to encapsulation specifications. The encapsulation cesium feed tank (TK-39-3) cesium inventory is normally limited to 13 MCi to maintain adequate cooling and the solution volume is maintained below 80% of tank capacity.

6.4.4.7 Cesium Product for Encapsulation. Off-standard product exceeding (NA + K + Rb)/Cs mole ratio of 0.15 and ($^{134}Cs/^{137}Cs$) atomic ratio >0.04 tends to decrease the KCi/capsule and increase the number of capsules. A lower melting point reduces corrosion but increases corrosion if the melting point is low enough to cause the cesium to remain in a molten state. Within the (cation/Cs) ratio of 0.1 to 0.5 and a temperature range of 525 to 613°C, the melting point decreases linearly as -215.85°C/(cation/Cs) ratio and the volume increases as +72.57%/(cation/Cs)ratio.

6.4.5 Safety Consideration, Control and Off-Normal Events (Table 6-2)

Sodium carbonate is required to adjust the ion exchange feed pH and is added at a controlled rate to avoid pressurizing the tank. The first 100 gal addition rate is limited to 4 gpm and reduced further if the tank begins to pressurize (Ref. 6-12).

6.4.5.1 Weight Factor Control of the Ion-Exchange Column Feed Tank (TK-18-3). There are six pushbuttons at the pushbutton station of which one pushbutton turns "ALL SYSTEMS OFF" and the other five energize solenoid valves EV-18-3-1 through EV-18-3-5 (Fig. 6-8). The IX Column Feed Tank (TK-18-3) receives solutions (Fig. 6-6) from the supernatant receiver tank (TK-17-2), cesium eluent makeup and storage tank (TK-21-1), demineralized water from III-header and $(NH_4)_2CO_3$ from MNB-173.

6.4.5.1.1 Process Solution Transfer. The weight factor recorder (WFRC-18-3) is operated at the desired setpoint and the solenoid valve (EV-18-3-2) is normally de-energized. The automatic solution transfer is accomplished by depressing the appropriate pushbutton. Only one pushbutton can be set at any one time, thus limiting the solution transfer from one tank only.



9 3 1 2 8 9 9 2 0 9 8

TABLE 6-2. Off-Normal Condition (Ion Exchange Process). (Sheet 1 of 4)

| Potential problem | Detection | Suggested immediate action | Likely cause | Suggested corrective action |
|---|---|---|---|---|
| Cesium break-through prior to completion of load. | High effluent gamma monitor reading. | Bypass Ion Exchange Column Tank with excess feed to recycle tank and use in subsequent feed makeup. | Too large of a feed batch. Channeling. | Make up fewer KC of cesium for next feed batch. Reduce flow rates. Perform upflow water wash to "fluff" the bed. |
| | Loading effluent samples | Collect high cesium content loading effluent in Cesium Waste Tank and route to TK-17-2 for cesium recovery, or in recycle tank and route to TK-17-2 for cesium recovery, or in recycle tank and use in next feed makeup. | Cesium concentration in feed too high. | Adjust cesium concentration in next feed batch accordingly. |
| | | | Very poor upflow elution on previous batch. | Assure completion elution of each run. |
| | | | Elution on previous batch was done upflow. | Elute upflow. |
| High cesium losses during scrub. | Abnormally high effluent gamma monitor reading. | Terminate scrub, collect high cesium content scrub in cesium waste tank/ TK-18-1 and route to TK-17-2 for cesium recovery. | Very high ammonium carbonate concentration in scrub. | Assure correct scrub makeup. |

TABLE 6-2. Off-Normal Condition (Ion Exchange Process). (Sheet 2 of 4)

| Potential problem | Detection | Suggested immediate action | Likely cause | Suggested corrective action |
|---|---|---|---|---|
| | TK-33-2/TK18-1 samples. | | Displacement of residual loading waste following a very high cesium break-through during loading. | Reduce batch size. |
| | High gamma monitor reading (10-15 Ci/L) at start of scrub. | Continue scrub, but collect scrub effluent in cesium waste tank and route to TK-17-2 for cesium recovery. | Too high cesium break-through in load. | Make up fewer KC of cesium cesium for next feed batch. |
| | | | High ammonium carbonate concentration in scrub. | Assure correct scrub makeup. |
| Inefficient scrub of Na, K, and Rb. | Scrub effluent samples. | Rework cesium product. | Higher Na, K, and Rb in the feed. | Increase scrub volume. |
| Extended elution. | Effluent gamma monitor remains at a constant high level indicating cesium still being removed from bed. | Continue elution or bring in a fresh batch of eluant. | Low ammonium carbonate concentration in eluant. | Bring in fresh batch of eluant of desired ammonium carbonate concentration. Sample MNB-173. |

TABLE 6-2. Off-Normal Condition (Ion Exchange Process). (Sheet 3 of 4)

| Potential problem | Detection | Suggested immediate action | Likely cause | Suggested corrective action |
|---|---|---|---|---|
| Gassing in exchanger column during elution. | Pressurization of column | Reduce eluant temperature. | Eluant temperature too high. | Maintain lower eluant temperature ±25°C. |
| Poor product quality. | Sample analysis of product. | Recycle product to feed tank 38-1 for next feed makeup. | Insufficient scrub. | Increase scrub volume in subsequent batches. |
| High cesium concentration in recovered eluant. | TK-19-1 sample. | Reduce feed rate to concentrator. | Liquid level in concentration too high. | Maintain lower operating liquid level in concentrator. |
| | Concentrator pressurization. | Lower liquid level in concentrator. | Feed rate to concentrator too high. | Reduce feed rate. |
| | Analysis of recovered eluant. | Route eluant to TK-19-1 for cesium recovery. | | |
| Excessive concentrator density; and temperature. | High SpG and temperature instrument readings. | Transfer concentrator contents to TK-39-3 via TK-38-8. | High cesium inventory and/or high cation to cesium molar ratios. | Limit KC of cesium to the concentrator and adjust flowsheet to improve impurity decontamination.<br>Empty E-38-6 more often. |

TABLE 6-2. Off-Normal Condition (Ion Exchange Process). (Sheet 4 of 4)

| Potential problem | Detection | Suggested immediate action | Likely cause | Suggested corrective action |
|---|---|---|---|---|
| Solids in TK-39-3 and/or TK-D-1. | Observed solids in WESF vessels and TK-D-1 sample. | Limit air sparging in TK-39-3 to avoid suspending solids into solution. | Particle degradation. | Decrease T-38-5 column flow rates and to upflow water wash. |
| High Column DP's. | Ion Exchange column instrumentation. | Reduce column flow rates and/or vent column. | Channeling. | Perform upflow water wash. |
| Loss of vacuum in E-38-6 | E-38-6 vacuum instrumentation. | Reduce column flow rate and concentrator steam flow rate. | Operating problems with vessel vent system. | Improve vessel vent operation. |

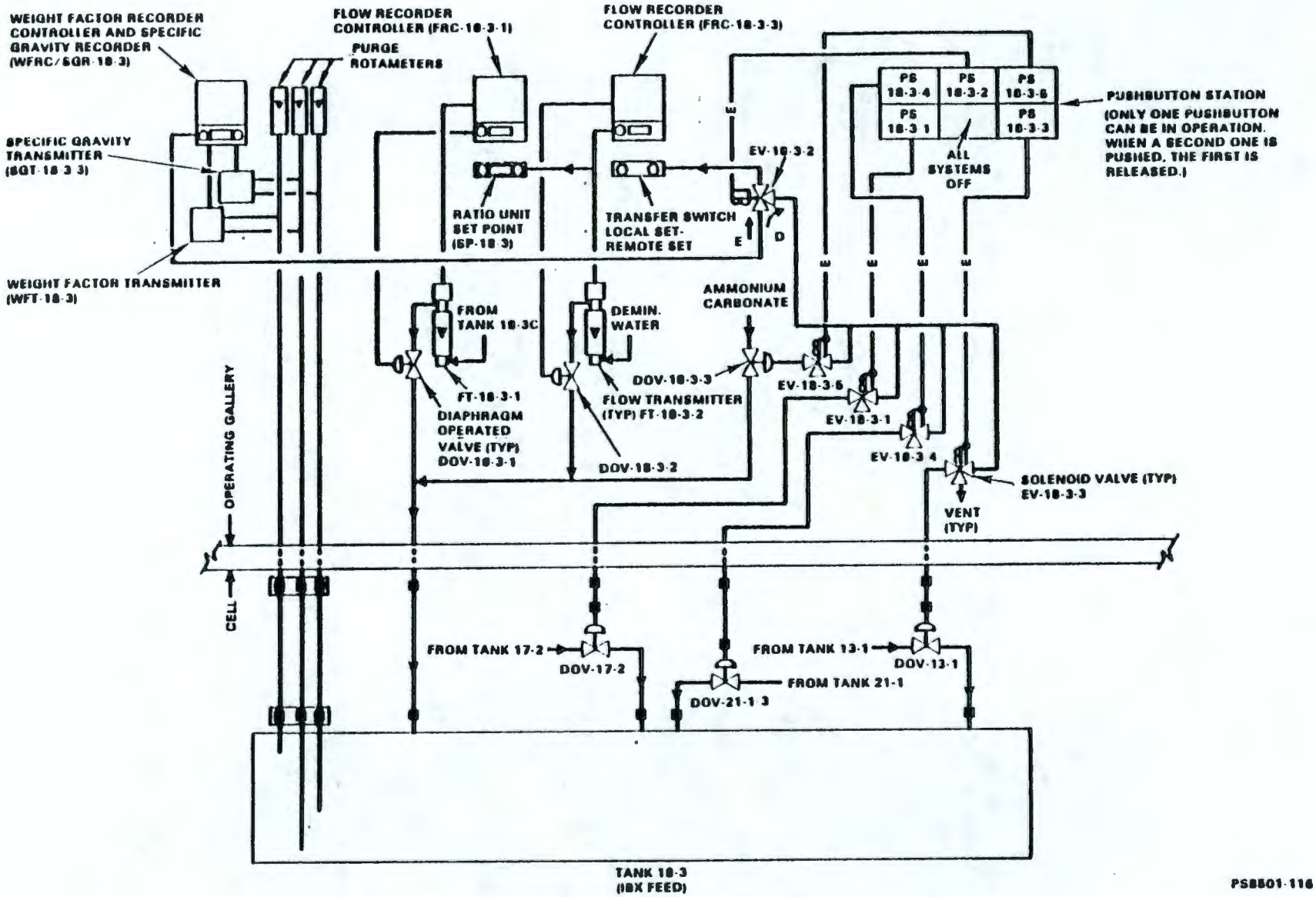


FIGURE 6-8. Tank 18-3 Weight Factor Control System.

6.4.5.1.2 Chemical Addition. There are three chemical (ammonium-carbonate, sodium-hydroxide and demineralized water) streams manifolded together. To add ammonium carbonate, the solenoid valve (EV-18-3-2) remains de-energized while the solenoid valve (EV-18-3-5) is energized by the pushbutton (PB-18-3-5) to allow automatic control of the diaphragm-operated valve (DOV-18-3-3). The remaining streams use a cascade control which consists of the weight factor recorder controller (WFRC-18-3), flow recorder controller (FRC-18-3-3) and the setpoint instrument (SP-18-3). The 'slave controller' (FRC-18-3-3) records and automatically controls the demineralized water flow rate which is dependent on the 'master' controller (WFRC-18-3). The setpoint (SP-18-3) instrument can be set in two positions, the "ratio" or the "manual." The output signal of the setpoint instrument (SP-18-3) is directed to the setpoint capsule (FRC-18-3-1) where the setpoint is adjusted automatically or manually by the setpoint unit to maintain a proper flow ratio between the chemical (from makeup tank MNB 13-173) and the demineralized water.

6.4.5.2 Ammonia and Carbon-Dioxide Addition System to Cesium Eluent Makeup and Storage System (Fig. 6-9). The desired quantity of ammonia or carbon-dioxide addition to the system is preset on the Flow Indicator Integrator Controller, the manual switch (MS-1) set in the operating position, and the system is activated by depressing momentarily the pushbutton which seals in the control circuit to close the flow alarm switch (FAS-1). Relay K-1 and time-delay relay (TDR) are energized permitting the diaphragm-operated valve (DOV-1) to be positioned through the manual controller (MC-1) and the solenoid valve (EV-3) is energized to open the power-operated valve (POV-3).

Upon completion of the addition of the desired quantity of ammonia or carbon dioxide as measured and compared with the predetermined quantity by the FIQC, the Relay K-1 is de-energized, flow alarm (FA-1) indicates a visual and audible alarm, the solenoid valve (EV-1) is de-energized closing the diaphragm-operated valve (DOV-1). Time-delay relay coil (TDR) is de-energized, but its contact remains closed for a preset delay period of 3 min maximum before opening, which energizes the solenoid valve (EV-3) allowing an air purge of the system. After a timed purge, the system returns to the normal condition.

## 6.5 STRONTIUM RECOVERY BY SOLVENT EXTRACTION (Ref. 6-11, 6-34; Fig. 6-10)

Upon completion of appropriate head-end treatments, aqueous wastes are processed by solvent extraction to separate the strontium and rare earths from the balance of metallic and fission product impurities.

The crude head-end product is chemically adjusted to make a suitable feed for the solvent extraction battery. Complexant is added to aid in obtaining the desired metallic ion distribution ratios in the 1A Column. A 10 to 20% excess of complexant added to the feed, ensures adequate complexing and provides contingency for feed composition variations.

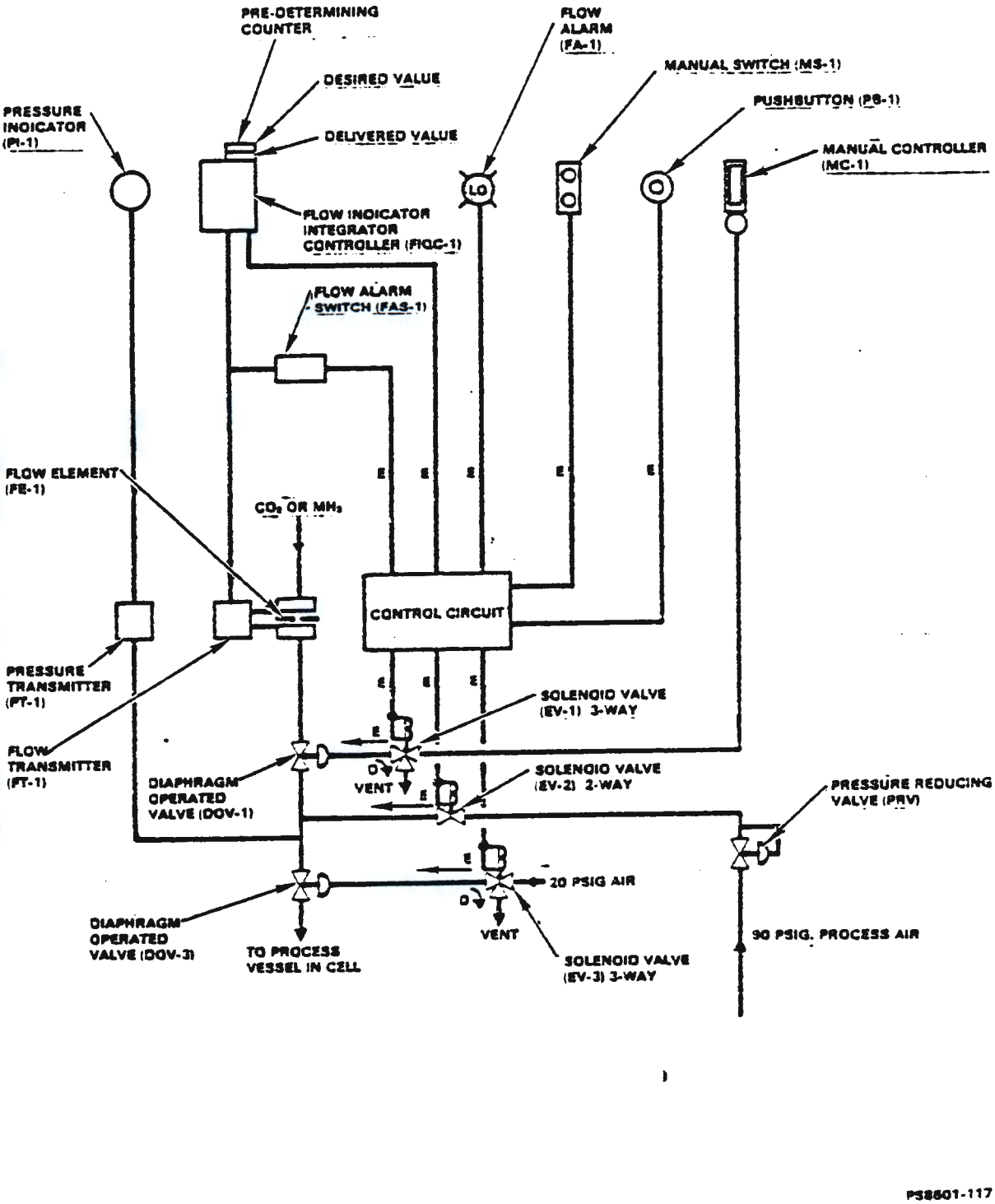


FIGURE 6-9. Ammonia, Carbon-Dioxide, and Air Purge System.

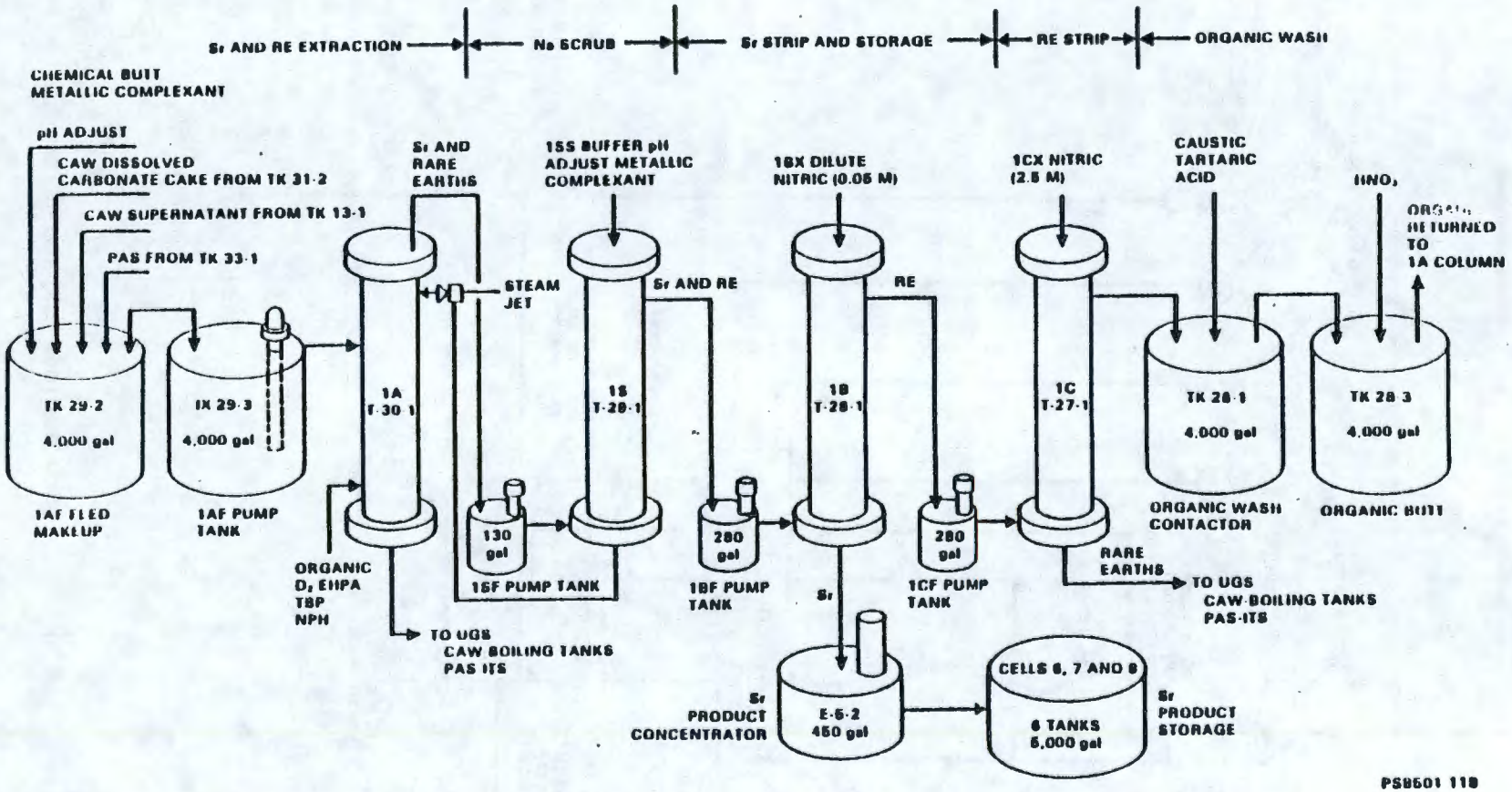


FIGURE 6-10. Strontium Solvent Extraction--Waste Fractionization Plant.

A buffering agent is added to provide pH control since the metallic ion distribution ratios are sensitive to pH fluctuations and a small amount of citric acid is added to the feed to improve the extraction kinetics in the 1A Column. The pH is adjusted with sodium hydroxide or nitric acid as necessary.

The separation is effected in a battery of four piston-pulsed columns (1A, 1S, 1B, and 1C). The strontium and rare earths are extracted into the organic phase [D2EHPA with a TBP modifier and a NPH diluent] in the 1A Column. Cesium, other fission products, and the majority of the metallic impurities remain in the aqueous phase and are removed as waste. Additional decontamination of impurities, particularly sodium, is obtained in the 1S Scrub Column.

Strontium and the rare earths are partitioned in the 1B Column with the strontium being stripped into the aqueous stream and the rare earths and americium remaining in the organic stream. The rare earths and americium are stripped from the organic in the 1C Column. Strict pH control is essential throughout the extraction battery to ensure the proper separation of metallic ion and fission product impurities from the strontium and rare earth product streams.

### 6.5.1 Extraction, Scrub, Partitioning, Stripping, Treatment and Concentration, and Storage of Strontium and Organics (Ref. 6-39, 6-37, 6-38; Fig. 6-10)

Feed for the solvent extraction system is made up in the 1AF makeup tank (TK-29-2). The premixed feed butt consisting of metallic ion complexant (HEDTA and EDTA), buffering agent (hydroxyacetic acid), and citric acid is gravity fed to 1AF makeup tank (TK-29-2) from the scale tank (TK-29-2A), as well as dilution water required to establish satisfactory aqueous-to-organic flow rates in the columns and to extend the run time to reduce fission product losses during startup and shutdown of the solvent extraction battery. The pH of the butted feed is initially adjusted with sodium hydroxide from the scale tank (TK-29-2B) and the final adjustment with sodium carbonate or nitric acid. When the feed has been adjusted to the desired pH, it is jetted to the 1AF pump tank (TK-29-3). The solvent extraction (1AF) feed rates are maintained above 3.5 gpm but closer to 9 gpm to cope with the available inventory and maintain reasonable operational efficiency.

The organic (1AX) rate is related to the quantity of D2EHPA complexed with extracted metallic cations such that the solvent loading is maintained above 35% to avoid inefficient sodium scrubbing and strontium stripping, but below 45% to eliminate reduction of strontium extraction factor and thus, avoid excessive strontium losses. The organic is composed of 0.5M D2EHPA, 0.3M TBP with NPH as the preferred diluent because of its relative insolubility in aqueous solution and stability in the presence of nitric acid. The TBP has a synergistic effect on strontium extraction increasing it by a factor of two. The 0.3M TBP as diluent modifier is the minimum concentration necessary to prevent the third phase formation of the sodium salt

(NaDEHP) which is sparingly soluble in aqueous solutions with sodium and has limited solubility in the diluent.

6.5.1.1 Extraction and Scrub (1A and 1S) Columns. The 1A Column (T-30-1) and 1S Column (T-29-1) form an extraction and scrub system. The extraction column (1A) provides the essential conditions for the segregation of strontium into the organic phase while the bulk of the inert and radioactive contaminants are left in the aqueous raffinate. The scrub column (1S) reduces the concentration level of sodium in the organic stream from the extraction column such that sodium will not interfere with the stripping of strontium in the 1B Column. Secondary benefits derived are elimination of feed entrainment from the 1A Column and scrubbing weakly extracted cations from the 1A product stream. These functions in the extraction and strip column are accomplished through proper choice and control of complexant addition, pH of the aqueous phase, organic composition, stream flow rates and pulsing condition.

The feed (1AF) to the 1A Column is pumped from 1A pump tank (TK-29-3) to the top of the extraction column where it joins the recycled sodium scrub stream (1SR) from the 1S Column. The aqueous streams form the dispersed phase and flow down through the continuous phase organic extractant (1AX) to the bottom disengagement section, where the aqueous-organic interface exists and the separation of the phases is effected. The organic extractant stream is composed of D2EHPA and TBP, diluted to 0.5M and 0.3M, respectively, with NPH (a form of kerosene).

The continuous phase organic extractant (1AX) is pumped from the 1X pump tank (TK-30-3) to the bottom of the 1A Column. When operating at flowsheet conditions, essentially all of the strontium, rare earths, calcium, manganese, magnesium, uranium, yttrium, and small quantities of iron, aluminum and zirconium-niobium are extracted. The product bearing organic phase (1AD) stream overflows from the upper disengagement section and is gravity fed to the 1SF pump tank (TK-29-4) located within the 1AF makeup tank (TK-29-3) from where it is pumped to the bottom of the 1S Column.

The aqueous stream (1AW) leaving the 1A Column, bearing the bulk of the $^{134}Cs$, $^{137}Cs$, $^{125}Sb$, $^{95}ZrNb$, $^{106}Ru$, other fission products, radioactively inert salts, and ~1% of the strontium and rhenium, flows by gravity (through a booster jet) from the lower disengagement section to the 1AW receiver tank (TK-30-2).

In the 1S Column, the organic is contacted with an aqueous scrub stream (1SS) to reduce the sodium concentration level to ~0.001M. The scrub solution is composed of the buffering agent (hydroxyacetic acid) for pH control and a small concentration of the complexing agent (HEDTA) to remove trace amounts of undesired metallic impurities carried over from the 1A Column. The 1SS butt is pumped from the scale tank (TK-29-1F) to the top of the strip column (1S) through an in-line blending tee for mixing with water to produce the required concentration and flow rate. The aqueous stream, enters the bottom disengagement section where the aqueous-organic interface exists and a separation of the phases is effected. After passing through

the organic continuous 1S Column the aqueous stream enters the bottom disengagement section where the aqueous-organic interface is located and separation of the phase is effected. The aqueous waste scrub stream (1SR) is jetted to the top of the 1A Column and the organic (1SP) overflows from the top of the 1S Column through a booster jet to the 1BF feed pump tank (TK-28-4).

6.5.1.2 Partition Column (1B). The strontium is stripped from the organic into the aqueous phase while separating as completely as possible, calcium, manganese, and rare earths in the organic phase and this is effected, as before, by the proper choice and control of the aqueous stripping stream composition and flow rate.

The 1BF feed pump tank (TK-28-4) continuously receives the 1SP (organic overflow from the 1S Column) and pumps it to the bottom feed point of the 1B partition column (T-28-1) where it becomes the continuous phase. Strontium is stripped from the organic phase with dilute nitric acid (1BX). The 1BX nitric acid butt is pumped from the scale tank (TK-28-1F) to an in-line blending tee for mixing with water to provide the desired concentration and flow rate to the top of the 1B Column. The interface in the organic-continuous column is located in the bottom disengagement section. The exiting aqueous phase (1BP), bearing about 97% of the strontium entering the column, 0.3% of the rare earths, the sodium not removed in the 1S Column, some calcium and trace amounts of other metallic impurities such as aluminum, iron, and zirconium-niobium flows by gravity to the 1BP product receiver (TK-28-2). The organic stream containing the rare earths overflows from the top of the column to the 1CF pump tank (TK-27-4). The concentration of 0.35M ± .001M $HNO_3$ maintains a pH below 2.4 in the column to permit stripping of more than 98% from the organic and avoid excess stripping of calcium and manganese at high pH values.

6.5.1.3 Strip Column (1C). The fission products, rare earths and calcium from the organic are stripped in the strip column (1C). It provides additional stripping of strontium. If strontium losses from the 1B Column are excessive, the retrieved strontium can be easily reworked.

The 1CF pump tank continuously receives the organic overflow from the 1B Column and pumps it to the bottom entrance point of the 1C Column. Like the 1B Column, the 1C Column is also an aqueous continuous top interface column. Rare earths, most of the remaining calcium and strontium, and trace amounts of other metallic impurities and fission products are stripped into the aqueous with 2.5M $HNO_3$ (1CX). The stripped organic stream (1CW) overflows from the top of the column to the 1CW receiver (TK-27-3). The aqueous waste stream (1CP) leaving the 1C Column flows by gravity to the 1CP receiver tank (TK-27-2).

The concentration of 2.5M $HNO_3$ is not critical since subsequent wash treatment removes the rest of the impurities, but the concentration is sufficient to strip all but the most tightly complexed impurities from the organic.

6.5.1.4 Organic Treatment. The process organic (1CW) is treated for removal of trace metallic and rare earth contaminants like iron, aluminum, yttrium, cerium, and uranium and separation of organic degradation products such as dibutyl phosphate and mono-ethylhexyl phosphoric acid. The treatment returns the used organic to its original composition and blend of the sodium (NaDEHP) and the acid (D2EHPA) form. The isotopes $^{90}Y$ and $^{144}Ce$ are removed to minimize organic radiolysis.

The solvent received in 1CP rework storage tank (TK-27-3) from the 1C Column is pumped batchwise (1,000 gal) to the organic storage tank (TK-26-1) where it is contacted with a 2M NaOH to 0.1M sodium gluconate waste solution (1OX) for removal of yttrium, cerium, zirconium-niobium, rubidium, uranium, nitric acid, iron, and small amounts of other metallic impurities. The primary D2EHPA degradation product mono (2-ethylhexyl) phosphoric acid is also removed. The wash solution is gravity fed to TK-26-1 and after each contact of organic and wash solution, an appropriate settling (40 min) time is allowed for separation of the phases. The organic is then decanted to 1AX makeup tank (TK-28-3).

Additional sodium hydroxide is added to the wash solution before the second and third organic batches have been washed and decanted, the depleted wash solution (OWW) is discarded to high-level waste neutralizer tanks (TK-25-1 and TK-25-2). The washed organic is butted with 12.2M $HNO_3$ to convert half of the NaDEHP to D2EHPA. Following 30 min of agitation and a 15-min settling period, the acidified organic is then decanted to the 1AX organic pump tank (30-3) as required and the aqueous waste in TK-23-3 (OBW) is discarded to TK-24-1.

6.5.1.5 Strontium Product Concentration and Storage. The solvent extraction product (1BP) is concentrated to 0.02M Sr to minimize lag storage volume and to produce an acceptable feed for subsequent strontium purification. The strontium product solution (1BP) is pumped on a semi-continuous basis from the 1BP product receiver (TK-28-2) to the Cell 5 concentrator (E-5-2) where it is concentrated.

The strontium solution, before transfer to the concentrator, is butted to ~0.3M $H^+$ with concentrated nitric acid (to maintain the $[H^+]$ of the concentrator bottoms between 0.5M and 2.0M) and settled for 30 min to permit disengaging of potential process organic. The steam pressure to the concentrator is limited to 35 psig to prevent the temperature from exceeding 135°C and the potential formation of explosive "red oil" from organic nitration. The concentrator is started when the 1BP product receiver tank (TK-28-2) volume is 1,600 gal and shut down when the volume decreases to 420 gal. The concentrator volume is kept relatively constant (~260 gal) by boiling off water and oxides of nitrogen; no solution is allowed to overflow the concentrator. Off-gases are routed to the condenser (E-5-3) for condensation. The condensate is routed to low-level waste collector tank (TK-24-1) for decontamination via a second evaporation in the concentrator (E-23-3) while the noncondensible gases are exhausted through the number 1 vessel vent system.

The concentrated strontium is removed from the concentrator (E-5-2) by jetting the solution to the concentrate receiver tank (TK-5-1) before the specific gravity or calculated strontium concentration limits are exceeded (1.32 SpG at 0.12M Sr; 1.26 SpG at 0.20M Sr). A small water flush is added to the concentrator and jetted to (TK-5-1) to flush the transfer line. The concentrated product is jetted to tanks (TK-8-1, TK-6-2, or TK-6-1) for lag storage prior to purification.

Although the 1BP flow rate to (E-5-2) is specified at 6 to 8 gpm, the actual rate used is not critical. However, it should exceed 6 gpm to provide adequate recirculation in the concentrator. The rate is normally run as close to 8 GPM as practicable to minimize operation time at the Cell 5 panelboard. The concentrator is designed to evaporate up to 16 gpm; however, the 1BP flow system (pump and flowmeter) is designed for only 10 gpm. Thus, routine operation at rates above 8 gpm are not recommended, nor are they required since 1BX rates are not expected to exceed 6 gpm for most of the processing.

During storage, the solution is allowed to self-concentrate to the same strontium and $H^+$ concentration it attained in the concentrator. Thereafter, water and nitric acid which were lost through evaporation, air entrainment, and radiolysis are replaced as necessary. Cooling water is supplied to the storage tank coils as necessary to maintain the solution temperature below 50°C and purge air is introduced to the vessel's vapor space to prevent formation of flammable mixtures of the hydrogen gas.

6.5.2 Safety Consideration and Off-Normal Conditions (Table 6-3)

Various topics are discussed under general safety consideration and control. This section presents a few considerations specific to the process.

6.5.2.1 Column Temperatures. The temperatures of the pulse columns and tanks containing organic solutions are maintained below 60°C to minimize formation of flammable organic vapors and rapid solvent degradation.

Increased temperatures increase the flooding threshold and stability of the pulse columns. It is desirable to maintain the column temperatures above 50°C, especially during periods of high throughput. This is particularly important for the 1A Column which is subject to more instability problems than the other columns due to its higher volume velocity and variable physical properties (i.e., density, viscosity, surface tension, and solids content) of the feed stream. The benefits derived from maintaining the 1A Column temperature between 55 to 60°C more than offset the reduction of strontium extraction caused by the higher temperature.

6.5.2.2 Extraction Pulses. The most efficient operation of the pulse columns, i.e., the lowest height of transfer unit (HTU) and the best mass transfer rate, requires that the pulse frequencies be adjusted to 75 to 95% of the flooding threshold frequency. Since the flooding frequency varies

TABLE 6-3. Off-Normal Conditions (Solvent Extraction). (Sheet 1 of 6)

| Conditions | Detection method | Probable cause | Identification of cause | Corrective action |
|---|---|---|---|---|
| High fission product (Zr-Nb-95, Ru 106, Cs-137 concentration in 1BP | (1) By analysis of the 1BP in-line sample<br>(2) By in-line gamma energy analysis of 1AP and 1BP streams<br>(3) By analysis of the 1BP stream. | (1) Flow rates:<br>a) High 1AF/1AX flow ratio.<br>b) Low total flow through 1A column.<br>(2) Flooding<br>(3) High temperature in 1A column. | (1) Rates:<br>a) Flow recorder on 1AF.<br>b) Flow recorder on<br>(2) Flooding:<br>a) Instrument specific gravity readings.<br>b) Interface or 1AW flow variations.<br>(3) High temperature:<br>a) Temperature recorder for 1AF pump tank and 1A column. | (1) Rates:<br>Adjust flows to proper ratios.<br>(2) Flooding (see text)<br>a) Decrease flow rates<br>b) Adjust pulse frequency<br>(3) High temperature<br>a) Decrease temperature of 1AF. |
| High metallic impurity concentration in 1BP | (1) By analysis of the 1BP in-line sample. | (1) Low complexant concetration in 1AF or 1SS.<br>(2) For high sodium:<br>a) High sodium in 1AF or 1AX.<br>b) High pH in 1A or 1S column<br>c) Low buffer concentration in 1SS.<br>d) High 1SS pH.<br>e) Low 1SS flow.<br>(3) For high calcium:<br>a) Low pH in 1B column.<br>(4) Flooding and entrainment from 1A and 1S columns. | (1) Analysis of 1AF or 1SS samples.<br>(2) For high sodium:<br>a) Analysis of 1AF, 1AX, or 1SS samples.<br>b) 1SS flow rerecorders.<br>(3) For high calcium:<br>a) 1BP in-line pH monitor.<br>b) Analysis of samples. | (1) Butt 1AF or 1SS to specifications.<br>(2) Adjust 1AF, 1AX, or 1SS flow rates.<br>(3) Adjust pH of 1BX stream.<br>(4) Flooding: (see text)<br>a) Decrease flow rates<br>b) Adjust pulse frequency. |

TABLE 6-3. Off-Normal Conidtions (Solvent Extraction). (Sheet 2 of 6)

| Conditions | Detection method | Probable cause | Identification of cause | Corrective action |
|---|---|---|---|---|
| | | | (4) Flooding:<br>a) Increase in column differential pressure readings.<br>b) Interface or 1AW flow variations. | |
| High rare earth concentration in 1BP. | (1) By analysis of the 1BP in-line sample<br>(2) By in-line gamma energy analysis of the 1BP stream. | (1) Low pH in 1B column.<br>(2) High 1BX flow rate.<br>(3) Flooding | (1) Low pH:<br>a) 1BP in-line pH monitor.<br>b) Analysis of samples.<br>(2) Flow recorders on 1BX chemical and water addition.<br>(3) Flooding:<br>a) Increase in column differential pressure readings.<br>b) Interface and/or 1BP flow variations. | (1) Low pH:<br>a) Butt 1BX with sodium hydroxide.<br>(2) Reduce 1BX flow rate.<br>(3) Flooding: (see text)<br>a) Decrease flow rate.<br>b) Adjust pulse frequency. |
| High strontium loss to the 1BW and high strontium contamination of promethium product (1CP). | (1) By analysis of the 1CP in-line sample.<br>(2) By in-line gamma energy analysis of the 1BW and 1CP streams. | (1) High pH in 1B column.<br>(2) High sodium in 1B column caused by low buffer concentration in 1SS, low 1SS flow, or high sodium in 1AF or 1AX.<br>(3) Low acid content of 1B column. when high sodium content exists.<br>(4) Low acid content of 1BX. | (1) High pH:<br>a) 1BP in-line pH monitor.<br>b) Analysis of 1BP samples.<br>(2) Analysis of 1AF, 1AX, 1SS, or 1BP samples.<br>(3) Analysis of 1BX samples. | (1) But 1SS with buffer.<br>(2) Increase nitric acid concentration in 1BX.<br>(3) Increase 1BX flow.<br>(4) Reduce 1AF flow or adjust 1AF and 1AX flows to the proper ratio. |

TABLE 6-3. Off-Normal Conditions (Solvent Extraction). (Sheet 3 of 6)

| Conditions | Detection method | Probable cause | Identification of cause | Corrective action |
|---|---|---|---|---|
| High cerium concentration in promethium product during separation of cerium and promethium | (1) By analysis of the 1CP in-line sample<br>(2) By in-line gamma energy analysis of the 1CP stream | (1) Inadequate oxidation of Ce (III) to Ce(IV):<br>a) Low persulfate concentration<br>b) High silver concentration<br>(2) Low 1CS flow rate<br>(3) High 1CX flow rate<br>(4) Low 1CF flow rate<br>(5) Improper 1CS/1CF flow ratio | (1) Analysis of persulfate and silver nitrate solutions<br>(2) 1CS flow recorder<br>(3) 1CX flow recorder<br>(4) 1CF flow recorder | (1) Butt 1CX solution with persulfate or silver nitrate<br>(2) Increase 1CX flow rate<br>(3) Adjust 1CF flow rate<br>(4) Adjust 1CF flow rate |
| High metallic impurity concentration in promethium probe 1 (Ca, Fe, Al) | (1) By analysis of the 1CP in-line sample<br>(2) By analysis of the 1CP sample from TK-26-2 | (1) High iron, aluminum, or calcium in 1AF<br>(2) Low complexant in 1AF or 1SS<br>(3) High 1CX nitric acid concentration<br>(4) High 1CX flow rate | (1) Analysis of 1AF and 1SS samples<br>(2) Analysis of 1CX samples<br>(3) 1CX flow recorder | (1) Decrease 1AF flow rate<br>(2) Butt 1AF or 1SS streams with complexant<br>(3) Adjust 1CX nitric acid content<br>(4) Adjust 1CX flow rate |

TABLE 6-3. Off-Normal Conditions (Solvent Extraction). (Sheet 4 of 6)

| Conditions | Detection method | Probable cause | Identification of cause | Corrective action |
|---|---|---|---|---|
| High strontium loss to the 1AW. | (1) By analysis of the aqueous waste in TK-9-1.<br>(2) By analysis of the 1AW receiver tank (TK-30-2) sample.<br>(3) By analysis of the 1AW in-line sample. | (1) Flow rates:<br>a) High 1AF (high aq/org flow ratio).<br>b) Low 1AX (high aq/org flow ratio).<br>(2) Stream compositions:<br>a) Low D2EHPA concentration in in 1AX.<br>b) Low TBP concentration in 1AX.<br>c) Low complexant concentration in 1AF.<br>d) High strontium concentration in 1AF.<br>(3) Low pH:<br>a) Low extraction in 1A column.<br>b) High strontium reflux from 1S column due to low 1SS pH.<br>(4) Flooding<br>(5) Pulse frequency or amplitude off optimum conditions.<br>a) Frequency.<br>b) Air in pulse leg. | (1) Rates:<br>a) Flow recorder on 1AF.<br>b) Flow recorder on 1AX.<br>(2) Stream composition:<br>a) Instrument specific gravity readings.<br>b) Analysis of samples.<br>(3) Low pH:<br>a) 1AW in-line pH monitor.<br>b) Analysis of samples.<br>(4) Flooding:<br>a) Increase in column differential pressure readings.<br>b) Interface and/or 1AW flow variations.<br>(5) Pulse frequency or<br>a) Frequency count.<br>b) Decrease in column differential pressure due to decreased amplitude/frequency product. | (1) Rates:<br>Adjust flows to proper ratios.<br>(2) Stream composition<br>a) Butt to specifications; or<br>b) Adjust flow rates to compensate.<br>1) If low D2EHPA or TBP concentrations exist, raise 1AX rate.<br>(3) Low pH:<br>a) Butt 1AF or 1SS with sodium hydroxide or buffer.<br>(4) Flooding: (see text)<br>a) Decrease flow rates.<br>b) Adjust frequency.<br>(5) Pulse:<br>a) Adjust frequency.<br>b) Shut down for maintenance of pulser. |

TABLE 6-3. Off-Normal Conditions (Solvent Extraction). (Sheet 5 of 6)

| Conditions | Detection method | Probable cause | Identification of cause | Corrective action |
|---|---|---|---|---|
| High rare earth loss to the 1AW. (Cerium contamination of cesium-bearing waste) | (1) By analysis of the aqueous waste in TK-9-1.<br>(2) By analysis of the 1AW receiver tank (TK-30-2) sample. | (1) See (1) above.<br>(2) Stream compositions:<br>a) Low or high complexant concentration in 1AF.<br>b) High cerium concentration in 1AF.<br>(3) High pH.<br>(4) Flooding.<br>(5) Pulse frequency or amplitude of optimum conditions:<br>a) Frequency.<br>b) Air in pulse leg.<br>(6) Low temperature. | (1) See (1) above.<br>(2) Stream compositions<br>a) Instrument specific gravity readings.<br>b) Analysis of samples.<br>(3) High pH:<br>a) 1AW in-line pH monitor.<br>b) Analysis of samples.<br>(4) Flooding:<br>a) Increase in column differential pressure readings.<br>b) Interface and/or 1AW flow variations.<br>(5) Pulse frequency or amplitude:<br>a) Frequency count.<br>b) Decrease in column differential pressure due to decreased amplitude/frequency product.<br>(6) Low temperature:<br>a) Temperature recorders for 1AF feed tank and 1A column. | (1) See (1) above.<br>(2) Stream compositions<br>a) Butt to specifications, or<br>b) Reduce 1AF rate or increase 1AX rate if high cerium concentration exists in 1AF.<br>(3) High pH:<br>a) Butt 1AF or 1SS with nitric acid<br>(4) Flooding: (see text)<br>a) Decrease flow rates.<br>b) Adjust pulse frequency.<br>(5) Pulse:<br>a) Adjust frequency.<br>b) Shut down for maintenance of pulser.<br>(6) Low temperature:<br>a) Increase temperature of 1AF. |

TABLE 6-3. Off-Normal Conditions (Solvent Extraction). (Sheet 6 of 6)

| Conditions | Detection method | Probable cause | Identification of cause | Corrective action |
|---|---|---|---|---|
| High promethium loss to 1CW during separation of cerium and promethium. | (1) By analysis of the 1CW sample.<br>(2) By in-line gamma energy analysis of the 1CW stream during PAW or ZAW processing. | (1) Low 1CX nitric acid concentration. | (1) Analysis of 1CX and 1CW samples | (1) Increase nitric acid concentration of 1CX.<br>(2) Increase 1CX flow rate. |

with each column design, the column's volume velocity, and several other factors, it is usually determined by experience and the optimum frequency set at 90% of this value.

The most efficient type of operation, called emulsion type, is characterized by small droplet size and fairly uniform dispersion throughout the pulse cycle. Unstable region between the emulsion region and complete flooding is characterized by periodic coalescence and holdup of the dispersed phase in a zone, followed by channeling of those large drops through the column. Pulse frequencies should be reduced to below this region or extraction efficiency may be impaired. Generally speaking, as the throughput rates are increased, pulse frequencies must be reduced to prevent entering the flooding or unstable regions. However, they should not be reduced so far that they result in "mixer-settler" operation with its very poor extraction efficiency or even worse, to the point where no countercurrent flow is attained at all.

The piston pulsers should not be started until the columns are nearly full of liquid. This assures that enough liquid is in the pulse leg to provide the process solution lubrication of the piston.

## 6.6 STRONTIUM PURIFICATION (Ref. 6-40 through 6-43)

The strontium purification process is performed in two stages:

- Sulfate precipitation (Fig. 6-11)

  This process involves precipitation of the strontium as sulfate, washing the precipitate to remove impurities, metathesizing the $SrSO_4$ solids to $SrCO_3$ solids and dissolving the carbonate solids in dilute nitric acid to form the purified product. The process effectively separates >99% of the cadmium, manganese, and magnesium and more than 95% of the aluminum, chromium, iron, nickel, lead, and zirconium from the strontium. Large amounts of calcium

  in the feed present a problem but 99% of it can be removed using large volumes of sulfate wash solution. Barium and rare earth decontamination is very low or nil. Strontium content of the process wastes typically ranges from 5 to 15% of the feed strontium, depending primarily on the volume and concentration of sulfate solution used.

  Sulfate wastes normally contain from 4 to 10 Ci $^{90}Sr$/gal and must be reworked through solvent extraction to recover the strontium. Metathesis wastes normally contain <1 Ci/gal and are sent directly to high-level non-boiling waste (HLNBW). Part of the sulfate wastes may be processed through a "rare earth (RE) waste strike" procedure which uses rare earth nitrates to scavenge the strontium and reduces the volume needing rework about eight-fold. Product from the RE strike process is sent to solvent extraction for rework and the waste is sent to HLNBW.

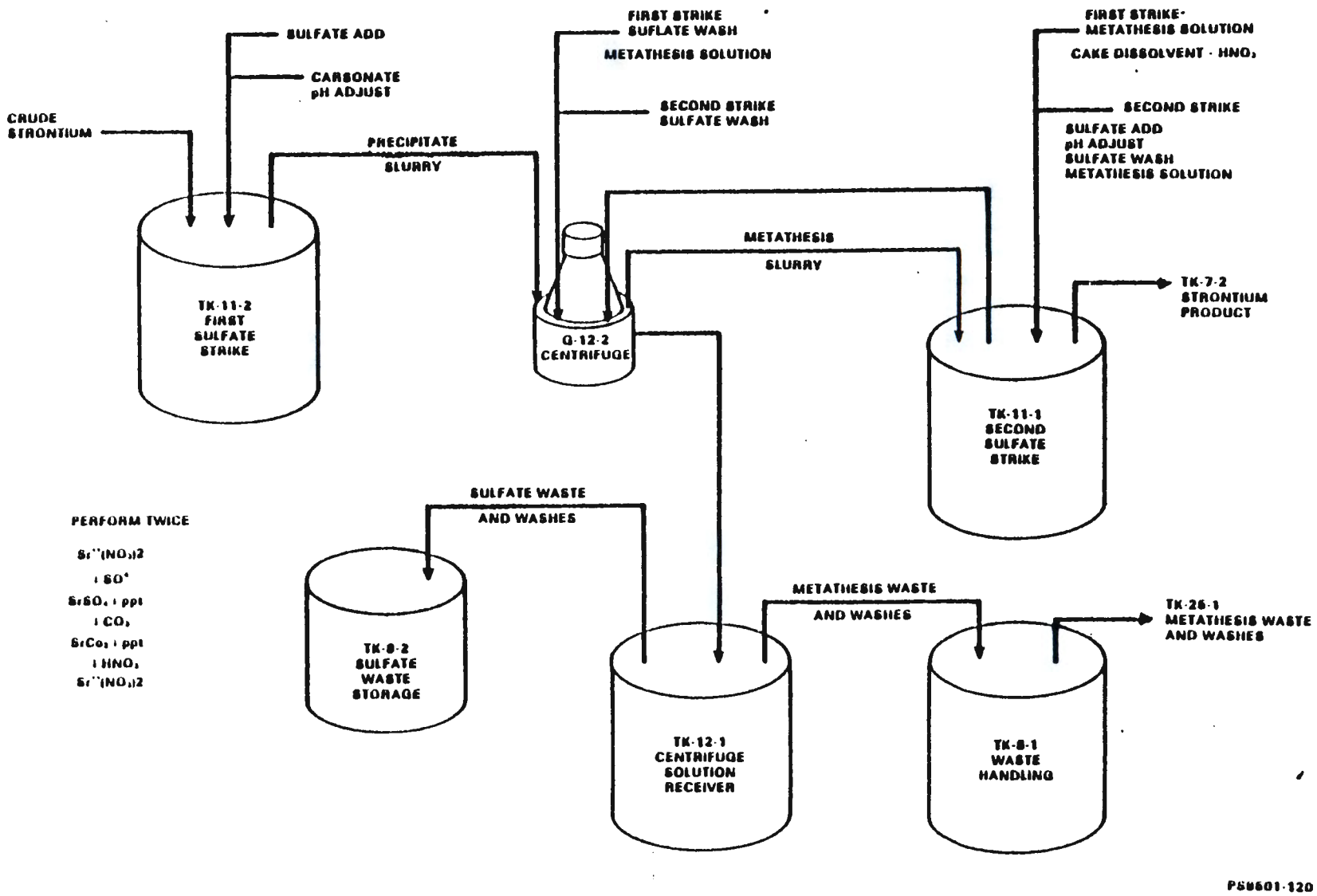


FIGURE 6-11. Strontium Purification-Sulfate Precipitation Flow Diagram.

- Caustic Strike (Fig. 6-12):

  The process involves clarifying the feed to recycle any strontium-bearing solids back to the sulfate purification process, then returning the feed to the precipitator tank where sodium hydroxide is added to pH 9 to 10. The precipitate volume ranges between 5 to 10% of the feed volume for 0.2M Sr feed and proportionately lower for less concentrated feed. After digestion, part of the slurry is centrifuged; the volume centrifuged will be calculated to contain <15 gal of solids. The centrifuged cake is removed to the centrifuge cleanout tank where it is washed with dilute caustic solution, then re-centrifuged, with the wash solution joining the clarified product. The washed cake is dissolved in nitric acid and routed to interim storage, prior to solvent extraction rework for strontium recovery. The centrifugation and wash sequence is repeated until all the slurry has been centrifuged, then the product is acidified with nitric acid, sampled and transferred to storage in Cell 36.

The strontium purification stages are batch-type processes which use the same equipment in Cells 11 through 14 and thus, cannot be executed concurrently. Semi-purified strontium products from a couple of sulfate precipitation batches are accumulated before interrupting the sulfate precipitation process and the equipment is thoroughly cleansed through flushing to allow the caustic strike process to occur. The duration of three to six batches of the sulfate precipitation process stage takes several months as compared to several weeks for the caustic strike process stage.

### 6.6.1 Sulfate Precipitation (Ref. 6-40, 6-41; Fig. 6-11)

This is a batch-type process where selective precipitation of the strontium as a sulfate occurs, which is washed and metathesized to remove impurities and transform the sulfate solids into strontium carbonate. The strontium carbonate is dissolved in dilute nitric acid to form the purified product.

The process effectively separates >99% of the cadmium, manganese, and magnesium and >95% of the aluminum, chromium, iron, nickel, lead, and zirconium from the strontium. High concentrations of calcium in the feed present a problem, but adequate calcium decontamination is attained by limiting the feed batch to <1,420 g-mol of cesium. Barium and RE decontamination is very low or nil. However, if barium and RE to strontium ratios are low (<0.03), the weight fraction strontium to total cations (excluding sodium) can be increased in the product to ~95% (97% for CAW feeds). Strontium recoveries in the purified product typically range from 90 to 95%, depending primarily on the calcium and strontium concentrations of the feed. The majority of the strontium bearing wastes are recycled to solvent extraction for strontium recovery, resulting in only 1 to 2% actual strontium losses to underground boiling waste storage.

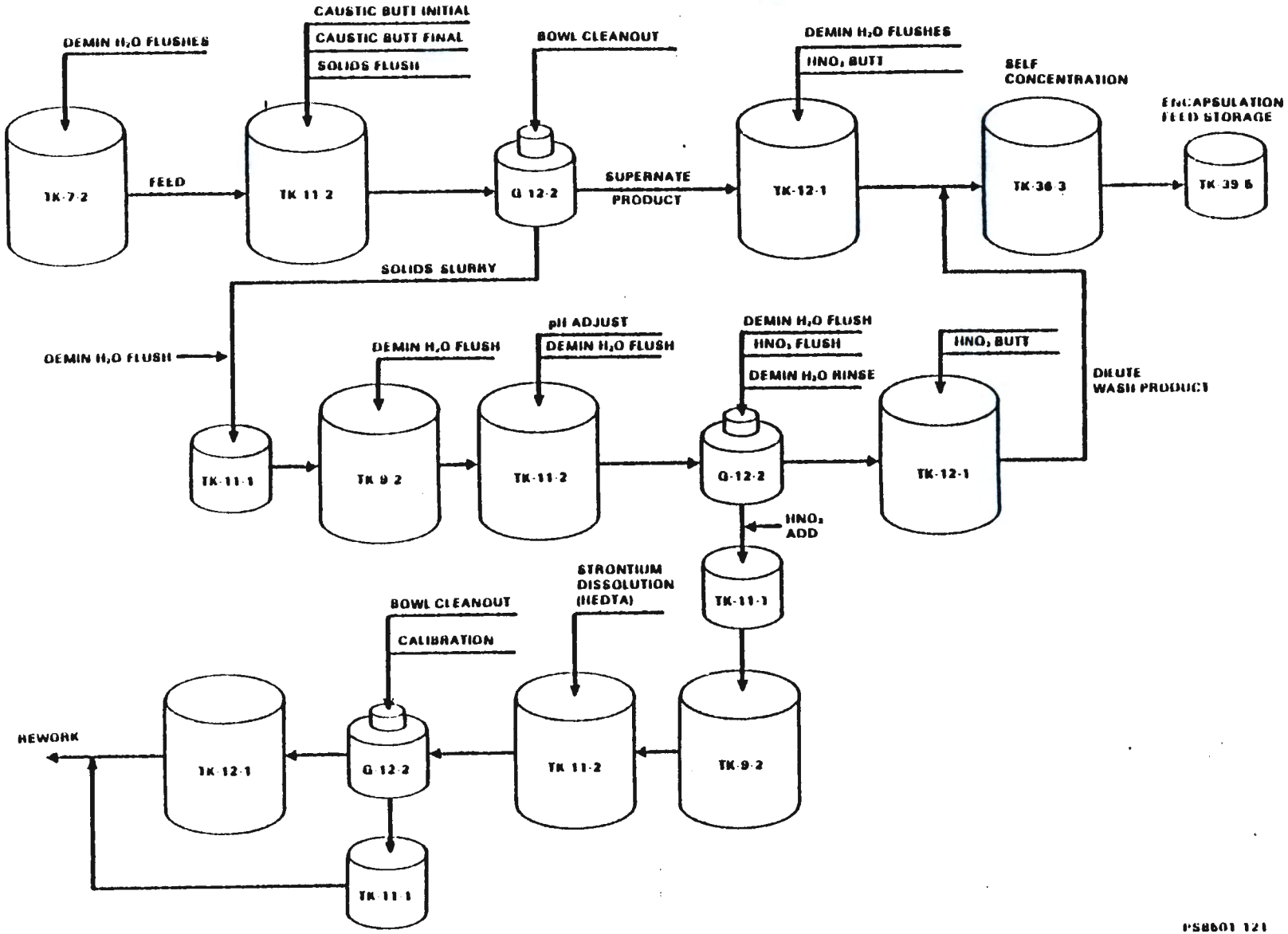


FIGURE 6-12. Strontium Purification-Caustic Strike Flow Diagram.

The sulfate precipitation process is conducted in four major steps:

- The First Sulfate Strike which precipitates the strontium and isolates most of the impurities in the supernatant.

- The Solids Wash which removes additional calcium and other occluded impurities from the strontium sulfate precipitated in the first strike.

- Solids Dissolution and Final Sulfate Strike which involves dissolution of the strontium sulfate and the remaining impurities in HEDTA and precipitation of strontium for additional decontamination.

- Metathesis and Product Dissolution which involves the conversion of strontium sulfate to strontium carbonate solids which is dissolved in nitric acid to form the purified product.

6.6.1.1 Crude Strontium Feed Composition (Table 6-4). Crude solvent extraction product solution must adhere to the limitation specified for the composition of the feed on Table 6-4 in order to be suitable for the sulfate precipitation process. Crude strontium feed not meeting the specified criteria is reviewed for its impact on the product. The lower strontium limit minimizes inefficiencies, waste volumes, and strontium losses due to small feed batches, and higher strontium limit minimizes solid formation during feed storage. The limits on the cation/strontium ratios are based on the required purity versus the anticipated maximum decontamination process. The calcium/strontium ratio, if exceeded, will cause excessive strontium losses and intolerable sulfate waste volumes.

- Solids reduction - Any solids in the feed are likely to contain impurities such as iron or aluminum that can be leached out during the latter stages of the purification process causing contamination of the products. The centrifuge capacity is also decreased with loss of $SrSO_4$ to the overflow.

- Batch size - The contents of a feed batch shall not exceed either 1,400 gal volume, 2.0 MCi of $^{90}Sr$, 1,420 g-mol of calcium, or a total of 2,000 g-mol of strontium, barium, and lead.

6.6.1.2 First Sulfate Strike. A calculated volume of crude strontium is jetted from strontium storage tank (TK-8-2) to centrifuge feed tank (TK-11-2). Temperature of feed batch is increased to 60°C while performing the following steps:

- Feed in centrifuge feed tank (TK-11-2) is butted to 1M $H^+$ with 12.2M $HNO_3$ if not already $\geq$1M. The concentration of $H^+$ can be adjusted in the strontium storage tank (TK-8-2) before transferring to the centrifuge feed tank (TK-11-2). Enough 1.8M $Na_2SO_4$ solution is added to centrifuge feed tank (TK-11-2) to double its solution volume, and the sulfate solution is heated to ~75°C prior

TABLE 6-4. Feed and Product Limitations, Decontamination Factor for Sulfate Strike.

| Composition | Feed | Product | Decontamination factor |
|---|---|---|---|
| $H^+$ | 0.5 - 4.0M* | 0.5 - 2.0M* | ------ |
| $^{90}Sr$ | 250.0 - 4,000. Ci/gal | 20,000 - 80,000 Ci/gal | ------ |
| Sr | 0.15 - 0.35M | 0.15 - 0.35M | ------ |

| Cation | Maximum cations/Sr | Mole ratio+ | Decontamination factor |
|---|---|---|---|
| Ca | 8 | 0.04 | 100 - 400 |
| Re | 0.03 | 0.03 | 0.9 - 2.0 |
| Mg(2) | 20.0 | 0.10(2) | ------ |
| Al(1,2) | 2(1) | ---- | 30 - 80 |
| Cr(1,3) | ---- | 0.10(3) | 20 - 200 |
| Ni(1,3) | ---- | ---- | 20 - 50 |
| Zr(1,3) | ---- | ---- | 10 - 50 |
| Cd(3) | 2 | ---- | 40 - 800 |
| Fe(3) | 2 | ---- | 30 - 70 |
| Pb(3) | 0.2 | ---- | 4 - 30 |
| Mn(3) | 30 | ---- | 3,000 - 10,000 |
| Si(3) | 0.5 | ---- | ------ |
| Ba | ---- | ---- | 1.0 - 1.2 |
| Ag | ** | | |

+Mole Ratio(N) - This is the total mole ratio of all cations with (N), where N is equal to 1, 2, or 3.

*Set high to prevent strontium and impurities precipitation during storage but low enough not to warrant an inordinate quantity of sodium carbonate for pH adjustment. High acid concentrations lower strontium solubility in the nitrate medium.

**Silver was detected in the feed in 1984. The decontamination factor was 0.1 approximately. No limitations have been established.

to addition, while the pH of the slurry is adjusted to 1.1 ± 0.1 using 2.5M $Na_2CO_3$ or 12.2M $HNO_3$ using the pH meter for the initial adjustment.

- The slurry in the centrifuge feed tank (TK-11-2) is agitated for at least 1 h at 60°C. During the digest, the slurry is sampled for a laboratory pH check to confirm specified pH prior to centrifugation. The centrifuge feed tank (TK-11-2) agitator is turned off and the slurry is allowed to settle for at least 30 min while being cooled to a temperature ≤40°C. When the solution is cool enough, the supernatant is jetted at <10 gal/min to supernatant receiver tank (TK-12-1) via the G-12-2 centrifuge. Part of the supernatant remaining in the centrifuge bowl at the end of the centrifugation is skimmed.

- Solids in the centrifuge bowl are removed to the centrifuge solution receiver tank (TK-11-1) by spraying 355 gal of 2.5M $HNO_3$ heated to 40°C, through the bowl sprays, and simultaneously jetting the solids slurry out. The waste in the supernatant receiver tank (TK-12-1) is sampled and the $^{90}Sr$ and magnesium results will influence the disposal methods, as follows: If the magnesium concentration is ≥0.12M and the strontium content is <1% of feed, the waste can be jetted to the high-level waste receiver and neutralizer tank (TK-25-2) via the waste collection tank (TK-9-1). After neutralizing to >12 pH with 50% NaOH, the waste is pumped to a high-level boiling waste (HLBW) underground storage tank. If the waste cannot be jetted to underground storage, it is recycled to SX, normally via the waste collection, centrifuge feed and precipitate and supernatant receiver tanks (TK-9-2, TK-14-2, and TK-13-1). First strike wastes recycled to SX must be blended with other purification wastes as much as possible before rework.

- The sulfate waste sometimes has been reworked through the RE strike process to recover strontium via the waste collection tank (TK-9-2) and Cells 13 and 14. However, if $^{90}Sr$ concentration in the waste is <5 Ci/gal, the waste is discarded to underground storage via waste collection and the high-level waste receiver tanks (TK-9-1 and TK-25-2). The waste discarded to underground storage containing $^{90}Sr$ concentrations >5 Ci/gal require negotiation with Tank Farm Process Control Engineering.

6.6.1.3 Solids Wash. The bowl cleanout slurry in the centrifuge solution receiver tank (TK-11-1) containing part of the sulfate solids is jetted back to the centrifuge feed tank (TK-11-2) and combined with the remaining solids. Two hundred gallons of demineralized water are added to the centrifuge solution receiver tank (TK-11-1), agitated for 10 min, and then jetted to the centrifuge feed tank (TK-11-2). This flush is repeated with a second 200 gal batch of water. Three hundred gallons of 3M $HNO_3$ is added to the slurry in the centrifuge feed tank (TK-11-2), and 110 gal of 1.4M $Na_2SO_4$ solution is added while the solution temperature is raised to 60°C and the solution is diluted to 3,100 gal with hot (70°C) demineralized water. Cold water can also be added and then temperate water used to adjust the temperature of the tank.

The wash solution is agitated at least 1 h at 60°C. During this digest, the solution is sampled and the pH meter reading recorded. If the $^{90}Sr$ concentration in the sample is >20 Ci/gal, the slurry is butted with additional 1.4M $Na_2SO_4$ solution, (3 gal of sulfate for every 1 Ci/gal over 20 Ci/gal) and digested for another hour.

The centrifuge feed tank (TK-11-2) agitator is turned off, and the slurry allowed to settle while being cooled to ≤40°C. When the solution is cool enough, the supernatant in the centrifuge feed tank (TK-11-2) is jetted at <10 gal/min to supernatant receiver tank (TK-12-1) via the centrifuge (G-12-2). At the end of the centrifugation, the centrifuge bowl is skimmed to the supernatant receiver tank (TK-12-1). As soon as the centrifuge feed (TK-11-2) is empty, 600 gal of water are added to cover the strontium sulfate solids. Solids in the centrifuge bowl are removed by spraying 190 gal of 1.57M HEDTA through the bowl sprays, and simultaneously jetting the HEDTA solids slurry out to the centrifuge solution receiver tank (TK-11-1).

In the past, the wash waste in the supernatant receiver tank (TK12-1) was sampled, then routed to solvent extraction rework. At the present time the wash waste is sent to RE process, normally via the waste collection tank (TK-9-2), and processed in Cells 13 and 14. Solid wash waste usually contains higher strontium concentrations than any other sulfate waste streams (10 to 40 Ci/gal).

6.6.1.4 Solids Dissolution and Final Sulfate Strike. After the bowl cleanout slurry to the centrifuge solution receiver tank (TK-11-1), it is jetted to the centrifuge feed tank (TK-11-2) and 200 gal of demineralized water are added, agitated for 10 min, and then jetted to the centrifuge feed tank (TK-11-2). This flush is repeated with a second 200 gal batch of water.

The solution in the centrifuge feed tank (TK-11-2) is diluted to 2,000 gal with demineralized water, heated to 80 to 90°C, and the slurry heated to 60°C and agitated for 2 h. One hundred sixty gallons of 12.2M $HNO_3$ is added to the centrifuge feed tank (TK-11-2) via the centrifuge (G-12-2) as well as 280 gal of 1.4M $Na_2SO_4$, heated to 75°C to prevent crystallization in the makeup tank. The slurry in the centrifuge feed tank (TK-11-2) is agitated for 1 h at 60°C. While digesting, the pH of the slurry is checked using the (11-2) pH meter, and if the pH is not within the range of 0.8 to 1.0, the pH is adjusted by adding appropriate amount of either 12.2M $HNO_3$ or 2.5M $Na_2CO_3$. Leaving the centrifuge feed tank (TK-11-2) agitator on, the sulfate slurry is jetted at ≤8 gal/min to the (G-12-2) centrifuge, allowing the clarified supernatant to overflow to the supernatant receiver tank (TK-12-1). A volume of 700 gal of demineralized water is added to the centrifuge feed tank (TK-11-2) and agitated for 15 min. The water flush is jetted to the centrifuge and the supernatant allowed to overflow and the bowl is skimmed. In the past, the waste in the supernatant receiver tank (TK-12-1) was sampled, then routed to solvent extraction rework. At the present time the waste is sent to RE process, normally via the waste collection tank (TK-9-2), and processed in Cells 13 and 14. However, if the strontium concentration is <5 Ci/gal, the waste will be discarded to underground storage via the waste collection and high-level waste receiver and neutralizer tanks (TK-9-1 and TK-25-2). The waste

discarded to underground storage containing $^{90}Sr$ concentrations >5 Ci/gal require negotiation with Tank Farm Process Control Engineering.

6.6.1.5 Metathesis and Product Dissolution. The $SrSO_4$, solids in the centrifuge bowl are removed by spraying 343 gal of metathesis solution (1.8M NaOH - 1.7M $Na_2CO_3$), heated to 40°C, through the bowl sprays and simultaneously jetting the slurry to the centrifuge solution receiver tank (TK-11-1), where 215 gal of metathesis solution (1.8M NaOH - 1.7M $Na_2CO_3$) heated to 40°C, are added through the centrifuge bowl and the metathesis slurry agitated for at least 2 h at 60°C. The centrifuge solution receiver tank (TK-11-1) agitator is turned off, and the slurry is settled while cooling to <30°C. Then the supernatant is jetted at ≤8 gal/min to the centrifuge (G-12-2), allowing the clarified supernatant to overflow to supernatant receiver tank (TK-12-1).

The $SrSO_4$, solids in the centrifuge bowl are removed by spraying 343 gal of metathesis solution (1.8M NaOH - 1.7M $Na_2CO_3$), heated to 40°C, through the bowl sprays and simultaneously jetting the cleanout solution to centrifuge solution receiver tank (TK-11-1), where 168 gal of metathesis solution, heated to 40°C are added through the centrifuge bowl and the metathesis slurry is agitated for at least 1 h at 60°C. The agitator is again turned off, and the slurry is settled while cooling to <30°C. Then the supernatant is jetted at ≤8 gal/min to the centrifuge, allowing the clarified supernatant to overflow as before. Two hundred gallons of 0.1M $Na_2CO_3$ are added and agitated for 15 min at ambient temperature, after which the agitator is turned off and the slurry is allowed to settle for 15 min before jetting the wash supernatant to supernatant receiver tank (TK-12-1), via the centrifuge (G-12-2). This step is repeated.

The solids in the centrifuge bowl are removed by spraying 260 gal of 2M $HNO_3$ heated to 40°C, through the bowl sprays and simultaneously jetting this cleanout solution to centrifuge solution receiver tank (TK-11-1).

6.6.1.6 Process Waste. The volume of sulfate waste generated per purification cycle is relatively constant at 9,800 ± 1,000 gal. The sulfate waste volume is strongly dependent on the Ca/$^{90}Sr$ ratio in the feed and minimization of losses is attained by increasing the $^{90}Sr$ in the feed to 1,400 Ci/gal while maintaining a constant Ca/$^{90}Sr$ ratio (see Fig. 6-15).

The volume of metathesis waste generated per purification cycle, a constant at 1,800 gal, is independent of the feed composition, and can range from 900 to 3,600 gal as the $^{90}Sr$ content per feed batch varies from 2,000 to 500 kCi of $^{90}Sr$.

Magnesium forms a major impurity, since Sr-Mg separation is not effected in the solvent extraction process and the problem of magnesium buildup is alleviated by magnesium purging effected by discarding the first strike waste, which contains >90% of the feed magnesium. This discard to the HLBW underground storage is affected only when the magnesium feed exceeds 0.3M and $^{90}Sr$ content of the waste is minimized.

The sulfate and the metathesis are reworked through the RE process and discarded to underground storage if strontium concentration is <5 Ci/gal and requires negotiation with Tank Farm Process Control Engineering if strontium concentration is >5 Ci/gal.

Actually losses to underground waste storage normally consist of <1% of the feed strontium lost via the metathesis waste and about 1% lost via the rework RE wastes. Strontium losses to underground storage will increase an additional 1% during those campaigns in which magnesium purging is performed, where the first strike wastes are discarded directly to underground storage instead of being recycled.

Depending on the $^{90}Sr/Sr$ ratios, these minimum strontium losses would range from 4 to 7%, compared to >10% for feeds with Ca/Sr ratios of 8 or more and <14% for feeds with <0.03M Sr concentration.

6.6.1.7 Safety Consideration and Off-Normal Conditions.

6.6.1.7.1 Acid Base Reactions. Sodium carbonate (2.5M) addition to the first sulfate strike is usually required to adjust the strike pH, while nitric acid (12.2M) is added to the metathesis waste to acidify it. Both these additions will result in the evolution of $CO_2$ gas (up to 4,500 $ft^3$) and, thus, the solution addition rate is controlled to avoid pressurizing the vessel. The carbonate addition rate should be limited to 10 gal/min, and the acid nitric rate to 5 gal/min. The vessel vacuum gage should be watched closely for signs of pressurization.

6.6.1.7.2 Precipitated Solids Handling. The volume of precipitate after the first sulfate strike is expected to be 30 to 60 gal, which exceeds the desirable loading volume of the G-12-2 bowl of 20 gal. Therefore, it is important that the TK-11-2 agitator be turned off prior to jetting the slurry to the centrifuge, effectively preventing the bulk of the solids from reaching G-12-2. If all the solids were centrifuged, many of the strontium-bearing solids would be lost to the sulfate waste. Also, an excessively high volume of solids could damage the centrifuge. Not until the final sulfate strike should the TK-11-2 agitator be turned on during centrifugation. By then the solids volume will be ≤10 gal, which is easily within the G-12-2 capacity.

6.6.1.7.3 Off-Normal Conditions. This is presented in Table 6-5.

6.6.2 Caustic Strike (Ref. 6-42, 6-43; Fig. 6-12)

Product from several sulfate precipitation campaigns is collected in strontium storage tank (TR-7-2). Upon accumulation of ~1,500 to 2,100 g-mol of strontium (6 to 15 MCi $^{90}Sr$) depending upon isotopic purity as sulfate precipitation product, the sulfate precipitation process is suspended, several routes are altered, and the equipment thoroughly flushed to prepare for the caustic strike process.

The strontium product from the first stage of strontium purification, the sulfate precipitation process, contains 2 to 5 wt%, based on total

TABLE 6-5. Off-Normal Conditions (Sulfate Precipitation). (Sheet 1 of 3)

| Potential problem | Possible causes | Suggested corrective actions |
|---|---|---|
| Solids carryover into supernatant receiver tank. | 1. Centrifuge not operating at correct speed. | 1. Readjust the speed. |
| (Chemistry problem is pH, Sulfate, Carbonate, etc.) | 2. Centrifuge feed flow rate too high. | 2. Reduce flow to <8 gpm. Calibrate |
| | 3. Slurry agitated during centrifugation. | 3. Do not agitate |
| | 4. Skimmers not set in the "out" position prior to centrifugation. | 4. Set skimmer in "out" position prior to starting the centrifuge. |
| | 5. Skimmer touching solids during skimming operating. | 5. Stop skimming when feel contacting the solids. |
| High Fe in product. | 1. pH too high (>1.3) during First Strike | 1. Avoid over shoot pH. Bring pH <0.9, readjust to a desired range. Check pH meter. |
| High Ca in product. | 1. Low $H^+$ concentration in wash solution (<0.5 M) | 1. Increase $H^+$ concentration with $HNO_3$. Check pH meter. |
| | 2. High $SO_4^=$ in wash solution. | 2. Avoid overadding $SO_4^=$ at low $H^+$ concentration. |
| | | 3. Rework. |
| High Pb in product | 1. High $SO_4^=$ concentration in the First Strike. | 1. Keep $SO_4^=$ concentration of First Strike at 0.9M. Check $SO_4$ addition, run additional metathesis. |
| Inefficient jet operation | 1. Temperature of solution >50°C. | 1. Cool. |
| | 2. Equipment failure. | |
| | 3. Steam supply low. | |

TABLE 6-5. Off-Normal Conditions (Sulfate Precipitation). (Sheet 2 of 3)

| Potential problem | Possible causes | Suggested corrective actions |
|---|---|---|
| Low Sr recovery in product in TK-11-1 | 1. Bad sample. | 1. Check DTR. Rerun or resample. Check $^{90}Sr/Sr$. |
| | 2. Inadequate $HNO_3$ to dissolve carbonate solids. | 2. Add $HNO_3$ to TK-11-1. |
| | 3. G-12-2 contains product solids. | 3. Clean out with $HNO_3$. |
| | 4. Loss of strontium in metathesis waste or previous waste streams | 4. Check chemistry of the process/physical problems (i.e., skimmer, pH . . .) |
| | 5. 11-2 heel. | 5. Flush 11 2 after the campaign is over. |
| | 6. Feed inventory wrong. | 6. Resample strontium storage tanks. |
| pH lab vs. meter doesn't agree | 1. Circulation, buffer wrong, lab wrong. | 1. Check for plugging, check buffer solution, rerun pH. |
| | 2. Bad in-cell pH probe. | 2. Change out probe. |
| | 3. Air supply to pH system turned off in the canyon. | 3. Check air supply to pH system in the canyon. |
| Excessive Centrifuge Vibration | 1. Residual solids in bowl. | 1. Clean out/calibrate. |
| | 2. Uneven cake distribution. | |
| Abnormally high amount of solids in centrifuge | 1. Slurry agitated during centrifugation. | 1. Turn off agitator during centrifugation. |
| | 2. Calibration incorrect. | 2. Recalibrate. |

TABLE 6-5. Off-Normal Conditions (Sulfate Precipitation). (Sheet 3 of 3)

| Potential problem | Possible causes | Suggested corrective actions |
|---|---|---|
| High Strontium in TK 12 1. | 1. Inadequate metathesis addition. | 1. Check addition. |
| | 2. Inadequate $SO_4^{=}$ source. | 2. Check addition. |
| | 3. pH too low (<0.9) or $H^+$ too high (<0.6 M) | 3. Resample, check water, check $Na_2CO_3$, or $HNO_3$ strength. |
| | 4. Residue Sr in TK-12-1. | |
| | 5. Bad sample. | 5. Check against OTR, rerun, resample. |
| | 6. Solids carryover. | |

cationic content of the solution not including sodium and hydrogen of metallic impurities such as iron, magnesium, and rare earths but excluding calcium and barium.

6.6.2.1 Function. The overall function of the caustic strike process is to reduce to a minimum those metallic impurities (such as iron, magnesium, and rare earths) in the strontium product solution which form insoluble precipitates when the solution is adjusted to pH 10 with sodium hydroxide. If not removed, these impurities will follow the strontium through the encapsulation process and may interfere with filtering and sintering steps of that process. More importantly, the potential of fluoride impurities significantly accelerating the storage capsule corrosion rate is unknown and therefore must be minimized.

6.6.2.2 Summary of the Process. Feed and process limitations are shown in Table 6-6. The feed to the caustic strike process, consisting of ~2,000 gal of solution containing ~2,000 g-mol of strontium previously purified by the sulfate precipitation method, is jetted from tank (TK-7-2) to the precipitator vessel, tank (TK-11-2). Two small water flushes from tank (TK-7-2) to Tank (TK-11-2) are used to flush the transfer line. Concentrated reagent grade sodium hydroxide (~19M) is added to the solution in Tank (TK-11-2) to raise the pH to 3, then dilute sodium hydroxide (1M) is used to adjust the pH to 9.5 to 10.5. The resulting slurry is then agitated for at least 4 h to promote impurity precipitation.

The precipitated solids impurities are removed from the supernate by passing the slurry through the centrifuge (G-12-2). To avoid over-filling the centrifuge bowl with solids and to maximize the percent of solids trapped in the bowl, the slurry is centrifuged in batches; the actual batch size depends on the estimated total volume of solids based on laboratory test of a feed sample. The clarified strontium solution is acidified in the tank (TK-12-1) then transferred to the tank (TK-36-3) for self-concentration. After each batch is centrifuged, the collected solids are washed and the slurry transferred to centrifuge solution receiver tank (TK-11-1) with 80 gal of very dilute sodium hydroxide (0.001 M). The slurry, collected in tank (TK-11-1), is transferred to tank (TK-9-2). A 100 gal water rinse of tank (TK-11-1), then transferred to tank (TK-11-2). Tank (TK-9-2) is rinsed to tank (TK-11-2) with three 300 gal water flushes. The solution in tank (TK-12-2) is adjusted to a pH of 10 with 0.1M NaOH and then centrifuged in small batches through the (G-12-2) centrifuge to tank (TK-12-1). The clarified wash solution is acidified in tank (TK-12-1) and transferred to strontium product storage tank (TK-36-3), as volume permits, for self-concentration.

Each batch of washed solids collected in the centrifuge is slurried to tank (TK-11-1) with 80 gal of water. When the tank (TK-11-1) volume exceeds 500 gal, 80 gal of 12.2M $HNO_3$ are added and the solution is transferred to tank (TK-14-2) via tank (TK-9-2). After the last centrifugation batch the (G-12-2) centrifuge bowl is cleaned with 150 gal of 0.5M $HNO_3$ and 100 gal of water.

TABLE 6-6. Feed and Product Limitations Decontamination Factor for Caustic Strike.

| Composition | Maximum ION/Sr Mole Ratio* | | Decontamination factor |
|---|---|---|---|
| | Feed | Product | |
| $H^+$ | $2 \leq H^+ \leq 8$ | $0.5 \leq H^+ \leq 3$ | ------ |
| $^{89}Sr+^{90}Sr$ | ------ | $\leq 0.66$ | ------ |
| $SO_4$ | 0.06 (max) | $\leq 0.06$ (max) | ------ |
| $NO_3$ | 8 (max) | 10 (max) | ------ |
| CATION | | | ------ |
| Ca (4) | | $\leq 0.10(4)$ | ~1 |
| Ba (4) | | | ~1 |
| Mg (1,4) | <0.01(1) | | >4 |
| Al (1,3) | | $\leq 7 \times 10^{-3}(3)$ | >7 |
| Fe (2,3) | <0.02(2) | | >20 |
| Cr (2,3) | | | >20 |
| Ni (2) | | | >20 |
| Cd (2) | | $\leq 3 \times 10^{-3}$ | >7 |
| Pb (2) | | $\leq 1 \times 10^{-3}$ | >4 |
| Mn (2) | | $\leq 3 \times 10^{-3}$ | >4 |
| Re (3) | <0.03 | | >4 |
| Ag | | | |
| Zr | | | <4 |

NOTE: Hydroxide solids volume $\leq$10 vol% at 0.2M Sr.

*Mole/ratio (N) is the total sum of mole/ratio of all cations with the same subscript (N) where N = 1, 2, 3, or 4.

All bowl cleanout solutions are collected in centrifuge solids receiver tank (TK-14-2) then centrifuged through the centrifuge (G-13-2) to tank (TK-13-1) to remove solids insoluble in nitric acid. The clarified solution is transferred from tank (TK-13-1) to tank (TK-33-1) for eventual rework through solvent extraction. Solids remaining in the centrifuge bowl are dissolved with 150 gal of 0.5M HEDTA, added via tank (TK-14-2). After 1 h in the centrifuge the HEDTA solution is transferred to tank (TK-14-2) via tank (TK-14-1). The centrifuge bowl is calibrated with water and cleaned out with 150 gal of 1M $HNO_3$; these solutions are also transferred to tank (TK-14-2) via tank (TK-14-1). Finally, tank (TK-14-2) is transferred to tank (TK-33-1) via tank (TK-13-1) for rework through solvent extraction.

6.6.2.2.1 Precipitation. After the initial transfer of sulfate precipitation process strontium product, which forms the feed for the caustic strike, two 50 gal water flushes are added to the strontium storage tank (TK-7-2) and jetted separately to the centrifuge feed tank (TK-11-2). Using reagent-grade sodium-hydroxide pellets for the first pH adjustment, a 19M NaOH solution is prepared in the scale tank (TK-11-2E) and added to the centrifuge feed tank (TK-11-2) until the pH of the solution reaches 3 ± 0.4. The final pH adjustment to 10 ± 0.5 is accomplished using 1M reagent-grade sodium hydroxide for the preparation of the solution and gradual addition to reach the required pH. The slurry in the centrifuge feed tank (TK-11-2) is agitated for an hour.

6.6.2.2.2 Centrifugation of the Slurry. A calculated fraction, normally 300 to 500 gal, of the agitated slurry volume in the centrifuge feed tank (TK-11-2) is jetted to the centrifuge (G-12-2) at a flowrate of 8 ± 1 gal/min while the centrifuge rotational speed is held at 1,740 rpm.

The clarified supernatant product overflows while the residual supernatant remaining in the centrifuge bowl is skimmed to the supernatant receiver tank (TK-12-1). The solids in the centrifuge (G-12-2) are removed to the centrifuge solution receiver tank (TK-11-1) using 80 gal of 0.001M NaOH solution which is added through the bowl sprays and the resulting slurry is transferred simultaneously by the bowl emptyout jet. However, if the volume of the centrifuge solution receiver tank (TK-11-1) exceeds 500 gal, the tanks are jetted to a waste collection tank (TK-9-2). The centrifugation step is repeated until the centrifuge feed tank (TK-11-2) is emptied.

6.6.2.2.3 Product pH Adjustment (Acidification) and Simmering. The hydrogen ($H^+$) ion concentration of the clarified product is increased to 0.2M by the addition of nitric acid based on sample results. After transfer of the acidified caustic strike product in the supernatant receiver tank (TK-12-1) to the strontium storage tank (TK-36-3) or other designated storage vessel, two 100 gal batches of demineralized water are added to the supernatant receiver tank (TK-12-1) and jetted to the strontium storage tank (TK-36-3) to flush the route.

The cooling water flow to the strontium storage tank (TK-36-3) is turned off to permit the product solution temperature to rise and to hold the temperature constant at 80°C until the strontium concentration increases

to 0.35M or until the wash solution product is added, at least 4 h at a temperature of 40 ± 5°C and the pH is rechecked and readjusted if required before proceeding to centrifugation stage.

6.6.2.2.4 Solids Flush. After the last centrifuge batch, the centrifuge feed tank (TK-11-2) is rinsed with 100 gal of 0.0001M NaOH and the resulting slurry is centrifuged with the clarified supernatant overflowing to the supernatant receiver tank (TK-12-1). The supernatant receiver tank (TK-11-1) is jetted to the waste collection tank (TK-9-2) after receiving all the waste from the centrifuge.

6.6.2.2.5 Solids Wash. All cleanout solution, contained in the waste collection tank (TK-9-2), is jetted to centrifuge feed tank (TK-11-2) followed by three 300-gal water rinses. The centrifuge feed tank (TK-11-2) pH is adjusted to 10.0 ± 0.5 using 0.1M NaOH or nitric acid and sampled. The slurry in tank (TK-11-2) is agitated at 40 ± 5°C for at least 8 h.

A calculated volume of the centrifuge feed tank (TK-11-2) slurry is jetted at flowrate of 8 ± 1 gal/min to the supernatant receiver tank (TK-12-1) through the centrifuge (G-12-2). Rotated at 1,740 rpm, the slurry is not agitated during jetting.

Solids are removed from the centrifuge bowl (G-12-2) to centrifuge solution receiver tank (TK-11-1) with 80 gal of water pumped through the bowl sprays. The above is repeated until the centrifuge feed tank (TK-11-2) is empty and processed through the centrifuge (G-13-2) to the supernatant receiver tank (TK-13-1) at a rate of 9 gal/min while agitating the centrifuge feed and precipitation tank (TK-14-2). The centrifuge is rotated at 1,740 rpm. The metathesis tank (TK-13-1), which receives the supernatant, is sampled, and transferred to the feed storage tank (TK-33-1) for rework through solvent extraction.

Approximately 100 gal of 0.5M HEDTA are added to the centrifuge bowl (G-13-2) via centrifuge feed tank (TK-14-2). After 1 h of dissolution the solution is jetted from the centrifuge bowl to centrifuge feed tank (TK-14-2) via the centrifuge solids receiver tank (TK-14-1).

One hundred fifty gallons of 1M $HNO_3$ at 50°C are added to the centrifuge bowl (G-13-2) through the bowl sprays while jetting the bowl empty to centrifuge solids receiver tank (TK-14-1). The cleanout solution is jetted to feed storage tank (TK-33-1) via centrifuge feed and metathesis tanks (TK-14-2 and TK-13-1) after sampling in preparation for solvent extraction rework.

The cooling water on strontium product storage tank (TK-36-3) is adjusted to allow the product temperature to rise to 90°C and the solution to evaporate until the strontium concentration reaches 0.35M.

The concentrated product is jetted from the strontium storage tank (TK-36-3) to strontium encapsulation feed tank (TK-39-5).

Two 50 gal batches of demineralized water are added and jetted to flush the transfer route.

One hundred gallons of 0.0011M NaOH are added to the centrifuge feed tank (TK-11-2) prior to the last centrifuge batch.

The slurried solids in centrifuge solution receiver tank (TK-11-1) are acidified with 80 gal of 12.2M $HNO_3$ before transferring to waste collection tank (TK-9-2). A 100-gal water rinse of centrifuge solution receiver tank (TK-11-1) is also jetted to waste collection tank (TK-9-2).

One hundred fifty gallons of 1M $HNO_3$ are sprayed into the centrifuge bowl (G-12-2) while simultaneously jetting the solution from the centrifuge (G-12-2) to centrifuge solution receiver tank (TK-11-1) from where it is transferred to the waste collection tank (TK-9-2). The flush is repeated with 100 gal of water.

Based on sample results, the $H^+$ concentration of the clarified wash solution in the supernatant receiver tank (TK-12-1) is increased to 0.2M with 12.2M $HNO_3$, and transferred to strontium product storage tank (TK-36-3) for simmering and storage until sufficient volume is available in the latter vessel.

The acidified slurry in the waste collection tank (TK-9-2) is agitated for 30 min then sampled and transferred to the centrifuge feed and precipitator tank (TK-14-2).

6.6.2.3 Process Wastes. The pH of the hydroxide strike, concentration of metallic impurities, and the efficiency of the wash are determining factors in strontium loss. A strontium loss, during a typical campaign containing 8 MCi of $^{90}Sr$, generates ~350 gal of waste per batch totalling 1,800 gal of 50 to 150 g-mol of metallic cations consisting primarily of iron and rare earth mixed with small quantities of zirconium, aluminum, manganese, and others, at a hydrogen ($H^+$) concentration of about 1.2M.

Strontium losses, 20% at a pH of 12.0 and 50% at a pH of 13.0, can be somewhat rectified by the addition of a proper quantity of nitric acid because strontium precipitated at pH 13 to 14 may not be easily redissolvable. Increased concentrations of metallic impurities such as iron and rare earth tend to either co-precipitate or carry along an excessive amount of strontium. Strontium loss of <2%, which occurs during solids wash, is reduced by solvent extraction to <0.2% of the feed.

The solids in the centrifuge solution receiver tank (TK-11-1), from the centrifuge bowl, is acidified, prepared for the solvent extraction process in the waste collection tank (TK-9-2) and finally held for strontium recovery in either the supernatant receiver tank (TK-13-1) or the treated acidified sludge storage tank (TK-33-1).

6.6.2.4 Safety Consideration and Off-Normal Conditions. General safety considerations and control are presented in Section 6.9, and the off-normal conditions are identified for the process in Table 6-7.

Table 6-7. Off-Normal Conditions--Caustic Strike Process. (Sheet 1 of 2)

| Off-standard | Probable causes | Description of potential problems | Correction/adjustment |
|---|---|---|---|
| Transfer rate slows or stops | •Jet gasses out due to either:<br>1. Solution too hot<br>2. Too much steam | Only jet steam is jetted through the lines | Air blow the jets and allow the solution to cool. Always <50°C before jetting |
| | •Plugged dip tube | Solids in the transfer solution could plug up the dip tube, stopping transfer | Air blow the dip tube to clear the pluggage |
| | •WF instrumentation | Instrument reading "burns out", dropping the WF reading to the lowest point or raising the reading to the highest point | Request instrumentation personnel to perform a check-out on the applicable equipment |
| Tank pressurizes | Gas evolution | The $HNO_3$ additions made during equipment preparation for caustic strike processing and during cause $CO_2$ gas to form. The HEDTA addition made during waste preparation also results in gas evolution. If not corrected, the accelerated gas evolution rate could cause the tank to pressurize to the point of leakage | Make the $HNO_3$ additions for equipment preparation at <60 lb/min and those for primary product handling at <30 lb/min. Add the HEDTA during waste preparation at <30 lb/min |
| | | Steam could produce excess pressurization in the receiver tank | Stop the transfer, air blow the jet, and resume jetting when pressure subsides |

TABLE 6-7. Off-Normal Conditions--Caustic Strike Process.
(Sheet 2 of 2)

| Off-standard | Probable causes | Description of potential problems | Correction/adjustment |
|---|---|---|---|
| Centrifuge shuts down | °Excess vibration (G-12-2/G-13-2) | The centrifuge is imbalanced due to the displacement of the solids on the sides of the bowl and result in centrifuge breakdown. | Monitor the "wobble meter" (vibration monitor) and the thermal overload indicator to prevent centrifuge shutdown. If the power to the centrifuge is automatically cut off, contact supervision. |
| | °Thermal overload | The centrifuge is imbalanced due to an inefficient operating speed (400-500 or 1,200 rpm). If not operated at the proper speed, the centrifuge motor windings could overheat. | |
| Product in storage simmers | Inadequate cooling water used to maintain proper temperature of 90°C during primary product concentration. | At >95°C, the rate of evaporation for self-concentration of the primary product can increase to the point of uncontrol and possible release of vaporized product containing $^{90}Sr$ into the vessel ventilation system. | Adjust/maintain sufficient cooling water on tank to keep temperature at 90°C. |

## 6.7 PROCESS WASTE STREAMS (Ref. 6-44)

Both liquid and solid streams, either routinely or potentially contaminated, are generated from various processes at the waste fractionization complex.

Liquid wastes are primarily aqueous solutions which may contain small amounts of solids. There are three liquid waste streams; namely (Table 6-8) high-level liquid waste; low-level liquid waste along with process condensate (BCP) from concentrator overheads; and steam condensate (BCS) from the tube bundles, and streams like chemical sewer (BCE) and process vessel and concentrator condenser cooling water (CBC) wastes.

Solid process waste can be grouped into two categories, canyon and out-of-canyon wastes, based upon their contamination level (Table 6-9).

### 6.7.1 High-Level Liquid Waste (Table 6-9)

This waste stream is comprised of the boiling and nonboiling wastes which contain high levels of cesium and strontium. The boiling wastes are all process chemical waste solutions, except the Cell 5 concentrator overheads, normally generated solely from the processing of CAW streams. Nonboiling wastes originate from the treatment of tank farm sludges and supernatants and from strontium purification. Sources of these wastes are the processing waste streams from solvent extraction, ion exchange systems, the column wash, and sodium scrub stream wastes. The waste streams from strontium purification, the process condensate from the strontium product concentrator, some miscellaneous wastes, flush solutions, and the cesium product tube bundle stream condensate are also routed to this system. Both boiling and nonboiling wastes are routed to underground storage tanks.

Tanks in Cell 25 serve as interim storage vessels for "high-level" wastes and they may require caustic addition for neutralization to a pH level of 12 (Ref. 6-44) or greater. Precipitation of solids from the solution is not of concern and the temperature is maintained in the range of 30 $\pm$ 3 °C. The tanks are flushed clean to eliminate plugging.

### 6.7.2 Low-Level Liquid Waste (Ref. 6-45, Table 6-10)

Low-level liquid wastes from the processing of cesium and strontium are generated containing small quantities of mainly cesium, strontium, and ammonium and treated for disposal by the waste concentrator (E-23-3). These streams have a potential of containing significant amounts of radioisotopes in the event of a process upset or equipment malfunction and failure. The low-level waste concentration system serves three basic functions: collection, blending, and neutralization in the low-level waste collector and neutralizer tank (TK-24-1), reduction of volume and segregation of ammonia from the liquid waste and disposal of the concentrated wastes to tank farms. In the process three streams are generated: the high-level liquid waste, process condensate (BCP), and the process steam condensate.

Table 6-8. B Plant Radioactive Waste Streams. (Sheet 1 of 2)

| Waste stream | Sources | Type | Characterization* | Quantity* | Destination |
|---|---|---|---|---|---|
| Boiling and non-boiling | A) PAS processing<br>B) Ion exchange<br>C) Column wash<br>D) Sodium scrub<br>E) Strontium product Concentrators<br>F) Flush solutions<br>G) Cesium product tube bundle steam condensate | Liquid 1%<br>Solid<br>Boiling and non-boiling | $^{137}Cs$ - 50 kCi/mo<br>$^{90}Sr$ - 4 kCi/mo | 39,000 gal/mo | Tank farms |
| BCP & BCS | A) Process condensate<br>B) Steam condensate | Liquid 1%<br>Solid | A) 12 Ci/gal avg. beta<br>B) $6.5 \times 10^{-3}$ Ci/gal. avg. beta | A) 400,000 gal/mo<br>B) 1.4 million gal/mo | A) 216-B-62 Crib<br>B) 216-B-55 Crib |
| CBC & BCE | A) Process vessel & concentrator condensor cooling water | Liquid 1%<br>Solid | A) $1.7 \times 10^{-3}$ Ci/gal. avg. beta | A) 69.9 million gal/mo | A) 216-B-32 Pond |
| | B) Chemical drains | | A) $9.5 \times 10^{-4}$ Ci/gal. avg. beta | B) 8.3 million gal/mo | B) 216-B-64 Trench |
| Solid waste<br><br>High dose rate | A) Canyon removal of failed equipment | A) Jumpers<br>B) Pumps<br>C) Agitators<br>D) Filters<br>E) Resin columns<br>F) Concentrators<br>G) Tanks | $^{90}Sr$, $^{137}Cs$<br><br>Beta-gamma contamination dose rate from concrete box 5 R/h @ 10' | Total for high dose rate solid waste<br><br>Approximately 1100 $ft^3$/mo | 200 East Industrial Burial Trench |

Table 6-8. B Plant Radioactive Waste Streams. (Sheet 2 of 2)

| Waste stream | Sources | Type | Characterization* | Quantity* | Destination |
|---|---|---|---|---|---|
| | B) 225-B waste in Cell 4 | Process cell waste | $^{90}Sr$, $^{137}Cs$ Beta-gamma contamination<br><br>Dose rate for unshielded 55-gal drum<br><br>100 R/h @ surface | | |
| | C) Canyon miscellaneous Wastes | Contaminated solid waste<br><br>(i.e., plastics, paper, SWP clothing, rags, etc.) | $^{90}Sr$, $^{137}Cs$ Beta-gamma contamination<br><br>Dose rate from wooden box<br><br>500-1,000 mR/h @ surface | | |
| Low-dose rate<br><br>Out-of-canyon solid waste | A) Galleries<br>B) Stacks<br>C) Effluent buildings<br>D) 212-B Cask Loadout Bldg.<br>E) General decontamination work | Contaminated solid waste<br><br>(i.e., rags, paper, rubber boots, valves, tools, etc.) | $^{90}Sr$, $^{137}Cs$<br><br>Beta-gamma contamination<br><br>Total Activity<br><br>$2 \times 10^{-2}$ Ci/waste carton<br><br>Dose rate per waste package<br><br>100 mR/h @ surface | 40 $ft^3$/wk<br><br>Large standard cardboard boxes | 200 East MFP trench |

*Based on 1979 Solid Waste Burial Record.

TABLE 6-9. High-Level Waste Routes.

| Routed to vessel | Process | Routed from vessel | Function | Source |
|---|---|---|---|---|
| TK-25-1 | Sulfate precipitation | TK-9-1 | Waste disposal and storage | TK-12-1: First sulfate strike waste, solid waste waste & final sulfate strike waste having high Mg & low Sr. acidified metathesis waste. |
| TK-25-1 | Solvent extraction | TK-31-1 | Centrifuge clean-out receiver | G-32-2: Residual solids after centrifugation; process waste comprised of bowl clean-out slurries and calibration water. |
| TK-25-2 | Cesium clarification | TK-11-1 | Solid waste disposal tank | G-12-2: Residual solids |
| TK-25-2 | Miscellaneous | TK-9-1 | Waste collector | TK-10-1 Cell drainage |
| | | TK-39-1 | Low-level waste receiver | Encapsulation low-level waste |

TABLE 6-10. Low-Level Waste Sources Routed to TK-24-1.

| Process | Vessel | Function | Source |
|---|---|---|---|
| Ion Exchange | TK-18-1 | Waste Pump Tank | TK-18-3: Excess Eluent from E-20-2 & E-38-6 Overheads via TK-21-1<br>TK-18-2: Sodium Scrub Waste, Loading Waste, Water Wash and Recycle Waste via TK-17-2 & TK-18-3 |
| Solvent Extraction | E-5-2 | Concentrator | Steam Condensate |
| | E-5-3 | Condenser | E-5-2 Overheads Process Condensate |
| | TK-26-1 | Impurity & Acid Removal Tank | Wash Solution: Sodium Hydroxide-Sodium Gluconate |
| | TK-28-3 | Reacidification & Organic Butting Tank | Organic: di(2-ethylhexyl) phosphoric acid with tributyl phosphate modifier & normal parraffin hydrocarbon diluent<br>Nitric Acid |
| | TK-30-2 | 1AW Receiving Tank | 1A Column: Aqueous Waste Stream bearing Metallic Impurities, Some Fission Products and Radioactive Inert Salts |
| Miscellaneous | TK-9-1 | Waste Collection Tank | TK-10-1: Cell Drainage |
| | TK-22-1 | Condensate Receiving Tank | Vessel Vent One Condensate |
| | TK-35-2 | Cask Waste Stream Receiving Tank | 212-B Cask Cell and VV Two Booster Jet |
| | TK-39-1 | Low-Level Waste Receiving Tank | Encapsulation and Cell 38 Low-Level Waste |
| | BCP Tank | B Plant Process Condensate Receiving Tank | Recycled BCP via 221-BB, 221-BF vessel, or 216-B-64 Basin |
| | BCS Tank | B Plant Steam Receiving Tank | Recycled BCS via 221-BB 221-BF vessel, or 216-B-64 Basin |

6.7.2.1 Concentration of Low-Level Liquid Waste (Table 6-11). The contents of TK-24-1 are neutralized with 19M caustic to a pH of >9.5 and pumped to the concentrator (E-23-3) at a rate of 30 to 44 gal/min.

The concentrator (E-23-3) is a single-pass shell-tube heat exchanger with liquid waste on the tube side and saturated steam, following countercurrently, on the shell side. Heat is supplied by the 30 psig steam to raise the temperature of the liquid waste feed from its initial condition to the boiling temperature. This provides the minimum thermodynamic energy to separate water and other volatile compounds from the feed. Most of the ammonium in the liquid waste is evaporated before water because of its higher partial pressure over basic solutions and the relative ease of decomposition of the ammonium salts present in the solution. The concentrator operates at a boiling specific gravity of 1.03 to 1.20 and reduces the feed volume by a factor of 10 to 20.

During steady-state operation, waste continuously overflows from the concentrator (E-23-3) at varying flow rates until a maximum of 2042 gal are collected in the low-level waste receiver tank (TK-23-1). The high-level liquid waste is cooled to a temperature below 60°C before being transferred en route to the high-level waste receiver and neutralizer tanks (TK-25-2 via TK-25-1). When both these tanks are full, the contents are adjusted to a pH ≥12 with a 19M caustic (if necessary), sampled and transferred to an underground storage tank in the tank farm for eventual solidification. A water flush is accomplished by pumping 2,220 ± 100 gal of water from the wash tank (TK-26-3) to the low-level waste receiver and neutralizer tank (TK-25-1) just before reaching minimum heel in order to prevent plugging of the line due to the presence of solids in the waste.

The concentrator (E-23-3) overheads, containing most of the ammonia present in the ion exchange and Cell 38 waste, pass through the de-entrainment vessel (D-23-2) and the condenser (E-23-4). The condensate is routed via 221-BB weir vessel to BCP holding vessels (A or B) and sampled prior to discharge to the 216-B-62 Crib for disposal depending upon the concentration level of the contamination. If the total beta concentration is >40 μCi/gal (2,000 cpm) or $^{90}Sr$ >12 μCi/gal, the waste is recycled to the low-level waste collector tank (TK-24-1) for rework to the concentrator. The steam condensate and water from the concentrator tube bundles are drained to the BCS tank in 221-BB building where it overflows a weir within the tank, it is sampled and disposed of to the 216-B-55 Crib.

6.7.2.2 High Ammonia Containing Waste Handling. If the ammonia concentration in the high-level waste exceeds 0.01M, prior approval from Tank Farm Process Engineering (TFPE) is required. The TFPE in turn notifies Tank Farm Operations of the impending transfers.

When treating waste containing high concentrations of ammonia, a batchwise process operation in the concentrator (E-23-3) is undertaken. The batch mode has been tested and determined to be more efficient in ammonia removal than the continuous mode (normal process) due to the longer residence time provided by the process and better mixing in the concentrator.

TABLE 6-11. Operating Conditions for Low-Level Waste Concentration.

| Vessel | SpG | pH | Temp.(°C) | Vacuum (in $H_2O$) | Steam pressure (psig) | NaOH addition rate (lb/min) | Agitator WF | Cooling water rate (gpm) |
|---|---|---|---|---|---|---|---|---|
| TK-23-1 | --- | --- | 40-60 | --- | --- | --- | --- | --- |
| E-23-3 | 1.18-1.20 | 9.5 | 112 ± 20 | Typical Range 0.5-10 (Startup 5, Equilibrium 2) | 10-30 | --- | --- | --- |
| E-23-4 | --- | --- | --- | --- | --- | --- | --- | 600 ± 50 |
| TK-24-1 | --- | 9.5 | --- | --- | --- | 50-75 (19M) | 18 | --- |
| TK-25-1/2 | --- | 9.5 | 60 | --- | --- | (19M) | --- | --- |

The following process sequence is applied when processing high ammonia feeds:

- The waste containing high concentrations of ammonia is transferred from TK-21-1 to TK-24-1 as specified by B Plant Process Control Group
- Tank (TK-24-1) is adjusted to a pH ≥9.5 as feed preparation for the concentrator
- Keeping a constant vacuum, the concentrator is started and operate until the specific gravity reaches 1.2
- The concentrator is shut down, cooled, and emptied to TK-25-1 via TK-23-1.

The above steps are repeated for the next batch.

6.7.2.3 Safety Consideration and Off-Normal Condition (Table 6-12).

6.7.2.3.1 Operational Hazards. The potential for pressurization is acute when starting steam to a concentrator containing solution at temperatures above 70°C. If the steam is supplied too rapidly, the noncondensible off-gas rate from the concentrator and the condenser will exceed the capacity of the vessel vent system and thus, to preclude pressurization, the steam supply is regulated at 10-30 psig and the feed rate is limited to 30-40 gal/min.

The low-level waste receiver tank (TK-23-1) is vented by the ammonia bearing Vessel Vent Two System but also serves as the condensate receiver tank for the non-ammonia bearing Vessel Vent One System. Ammonia contamination of the Vessel Vent One System, which results in a high solids accumulation rate on the vent system filters, can occur if the liquid level in low-level waste receiver tank (TK-23-1) is permitted to drop below 125 gal (10 in.). A heel of at least 10 in. is therefore maintained to prevent a direct connection between the two Vessel Vent Systems.

The low-level waste receiver tank (TK-23-1) and low-level waste collector and neutralizer tank (TK-24-1) agitators can be severely damaged if run when the volume is <125 gal (10 WF) and 1,745 gal (10 WF), respectively. Allowing the liquid level to drop below 10 WF with continued agitator operation can result in the distortion of the agitator shaft. To preclude the event, an electrically operated motor control center automatically shuts down the agitator upon a level decrease to 10 WF. Administrative controls are maintained, identifying the minimum volume for agitator operation.

6.7.2.3.2 Chemical Hazards. All wastes in the low-level waste collector and neutralizer tank (TK-24-1) must be adjusted to a pH of ≥9.5 and a pH ≥12 in tanks TK-25-1 and TK-25-2 before concentrating and shipping to underground storage to maintain the integrity of underground transfer lines and storage tanks.

TABLE 6-12. Off-Normal Conditions--Waste Concentrator.

| Off-normal condition | Potential cause | Suggested corrective action |
|---|---|---|
| 1. Pressurization in E-23-3 concentrator | 1. Steam supply rate too high | 1. Reduce rate of steam supply to tube bundle(s). If necessary, shut off restart the steam supply |
| | 2. Chemical addition rate greater than 50 lb/min | 2. Reduce rate of chemical addition |
| | 3. Feed flow rate too high | 3. Adjust rate of feed from TK-24-1 |
| | 4. Possible solids buildup in tube bundles | 4. Shut down concentrator operation, and flush with water or nitric acid |
| 2. Low vacuum on E-23-3 or unable to get boiloffs | Vapor line pluggage | Flush vapor line from E-23-3 to Cell 21, Nozzle 213 in Cell 23, Nozzle 202 in Cell 21 |
| 3. Instability of differential pressure on de-entrainer | Foaming of the concentrator | 1. Add water through de-entrainer sprays |
| 4. High activity in BCP samples | Cesium buildup in E-23-3 Concentrator | Empty out and flush the concentrator with water |
| 5. Low differential pressure in Cell 23 | Low vacuum in Cell 23 | Shut down Cell 21 booster jet for 1 to 2 h, then restart |
| 6. Unable to jet contents of TK-23-1 to TK-25-2 | Pluggage of jet due to solids buildup | 1. Back flush TK-23-1 to TK-25-2 jet |
| 7. Fluctuation of specific gravity chart. | High specific gravity contributed to:<br>1. Solids buildup<br>2. Pluggage of dip tubes | 1. Reduce steam addition rate<br>2. Increase feed flow rate |
| 8. Weight factor increase in E-23-3 | Pluggage of overflow nozzle from E-23-3 to TK-23-1 | 1. Add water through top of concentrator to dilute feed and force top overflow<br>2. Operate steam jet from E-23-3 to TK-23-1 to lower operating volume |

The mixing of acid with basic solutions, as done during the pH adjustment steps in tanks TK-24-1, TK-25-1, and TK-25-2, is an exothermic reaction. The chemical addition rate is manually maintained low enough (50 to 75 lb/min) to maintain a negative pressure and a temperature below 60°C in the tank.

Adding chemicals to the concentrator from the scale tanks in the operating gallery can result in contamination of the operating gallery if the concentrator is allowed to pressurize for an extended length of time with an empty seal pot in the chemical addition line.

6.7.2.3.3 Entrainment. Longer residence time and thorough circulation in the concentrator can cause more cesium or strontium to go into the BCP via entrainment and is of concern at startup when rapid steam supply to the vessel can cause the concentrator to pressurize.

6.7.2.3.4 Water and Acid Flushes of Cells 23, 24, and 25 Vessels. Water flushes are required quarterly for cleanout of concentrator (E-23-3) or when the BCP samples show increased activity. Periodical flushes of low-level waste collector and neutralizer tank (TK-24-1) can prevent solids buildup. Nitric acid flushing provides simultaneous cleanout of Cells 23, 24, and 25 vessels or dissolution of solids which cause the plugging in WF-SpG dip tubes and the sample and pH meter systems.

6.7.2.3.5 B Plant Ammonia Handling. The ammonia feed to the concentrator comes from various cesium purification processes which use ammonia as a raw material in eluent makeups. The reaction of ammonia vapor with nitric acid generates ammonium nitrate solids which can deposit in the vessel ventilation system. The deposition can cause constriction in the vessel ventilation piping, reduce the favorable differential pressure required in the ventilation system and cause filter problems. Therefore, the removal of ammonia is another reason for operating the concentrator.

### 6.7.3 Process Condensate (BCP) (Fig. 6-13, 6-14)

The process condensate from the B Plant Cell 23 low-level waste concentrator exits 221-B to the 221-BB Building condensate pit BCP weir tank.

The overflow from the weir tank flows to 221-BF facility into two alternately filling 13,000 gal holding tanks. As one tank is filling, the other tank is being sampled and pumped to the 216-B-62 Crib. All pumping and switching operations are controlled from the panel board at 221-B operating gallery, Cell 23. In event of holding tank sample results above release limits, the capability exists for recycle to the B Plant high-level waste disposal system.

The process condensate volumetric discharge is recorded on a batch discharge basis via the calibration/conversion from monitored tank weight factor recorded on a strip chart in the operating gallery of 221-B at Cell 23. Discharge volume is also measured by dip tubes positioned above the inclined weir in the effluent stream, in the 221-BB Building.

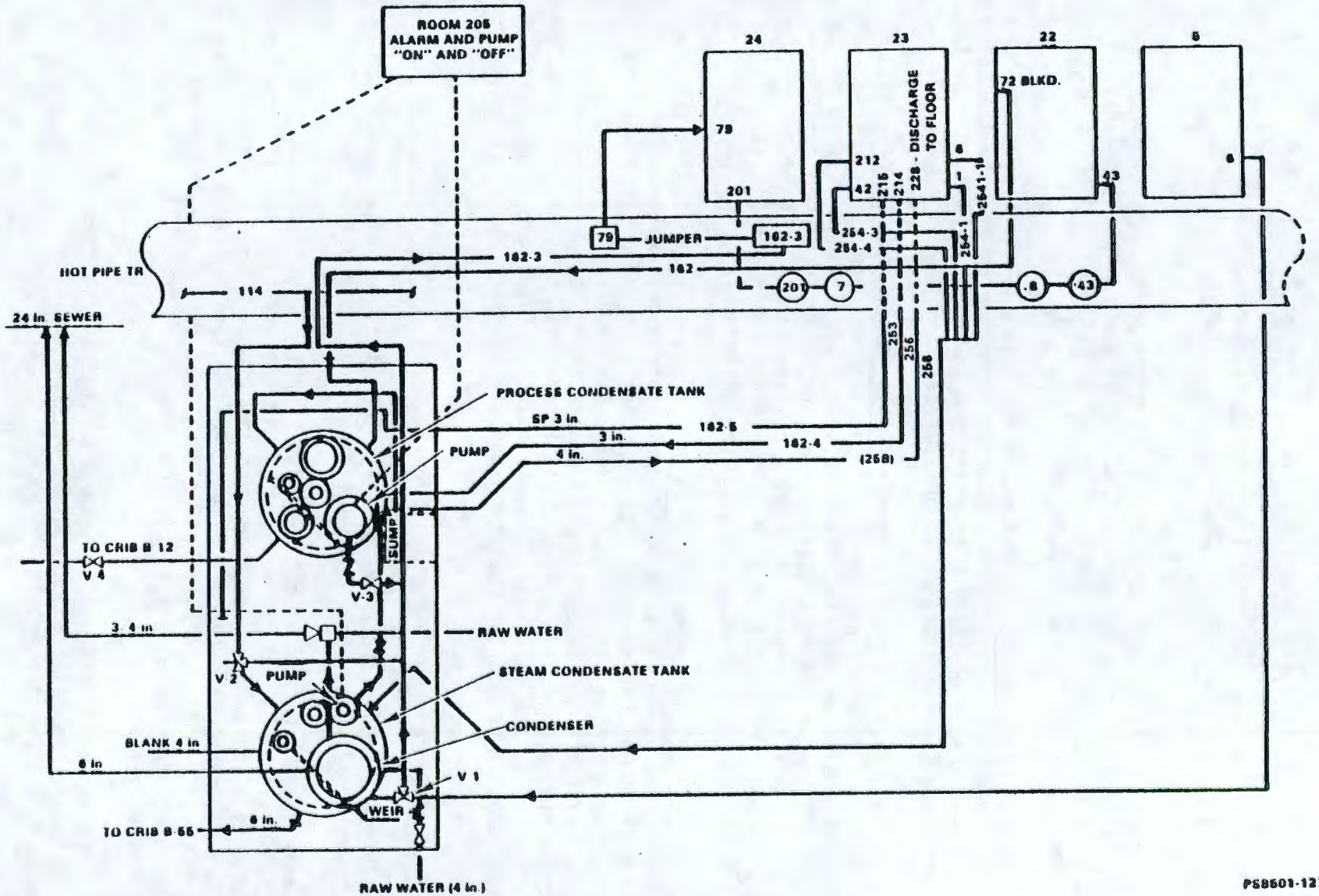


FIGURE 6-13. BCP and BCS Condensate Pit.

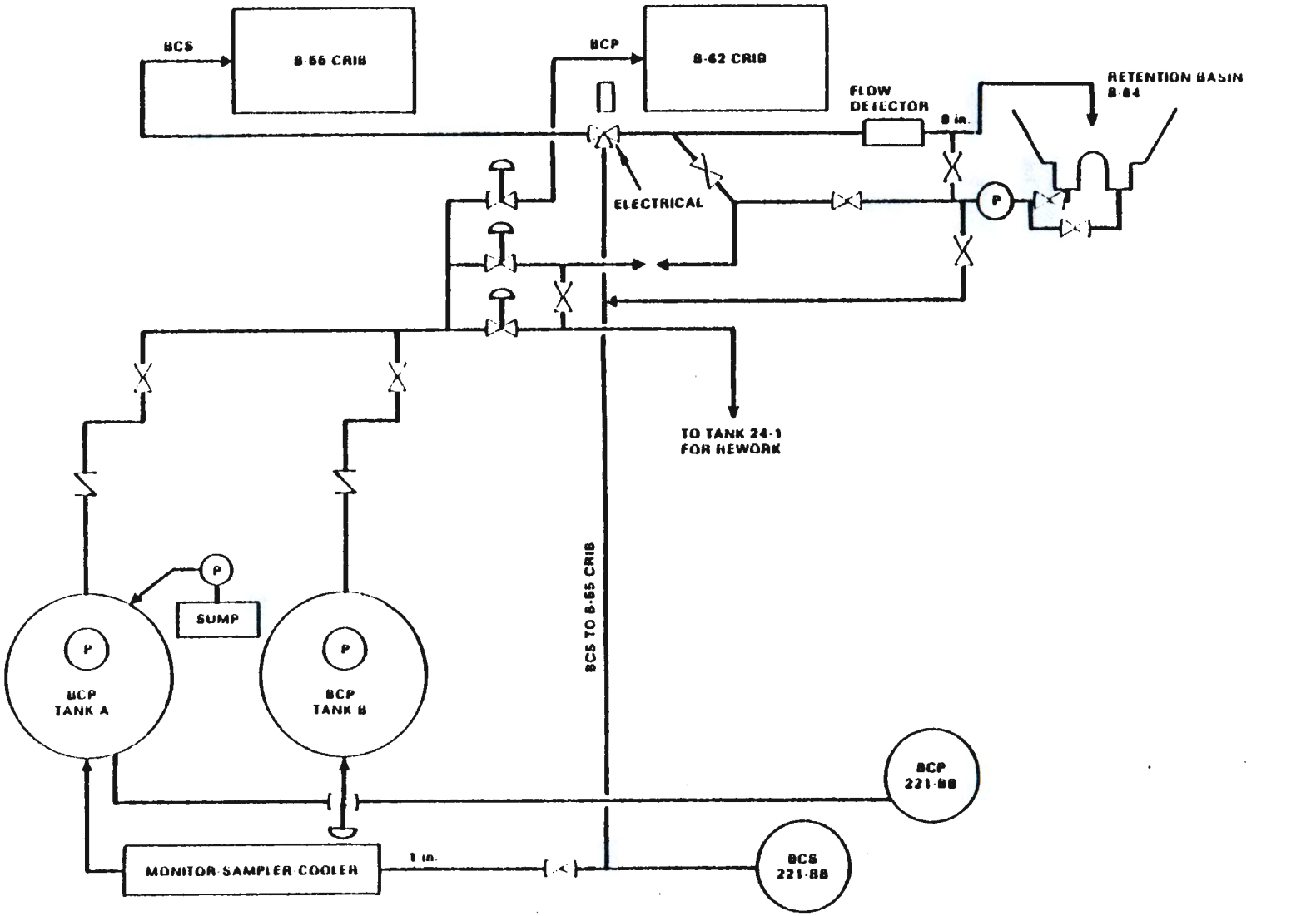


PS8601-124

FIGURE 6-14. BCP and BCS Condensate Routing.

6.7.3.1 Safety Consideration and Control.

6.7.3.1.1 Sampling. Two 100 mL samples are drawn from each full (~11,000 gal) holding tank after agitation and routed to the 222-S analytical lab. One sample is composited for monthly analysis (discharge inventory sample) and the other is immediately processed. A third 100 mL sample is used to determine the discharge of nonradiological hazardous chemicals. The analytical turnaround time is intended to avert discharge of second (filling) tank in event of anomalous levels in the preceding tankfull. Grab sampling capability also exists at the 221-BB weir tank but is not routinely used.

6.7.3.1.2 Monitoring. There is an area monitor with emergency support power in the 221-BB (condensate) pit which registers gamma radiation resulting from a gross upset. The area monitor alarms locally and in the dispatcher's office where this monitor is registered on a strip chart record.

The BCP monitoring system consists of two distinct detectors [LaNaI(TL)] gamma and a NE-102 organic beta scintillation crystals] coupled to a photomultiplier tube. Each of these assemblies is mounted vertically on a 0.25-in.-thick piece of lucite which separates them from the waste stream; they are shielded by lead to reduce background interference.

6.7.3.1.3 Diversion/Retention Capability. The BCP stream includes two 13,000 gal hold-up tanks for sampling prior to discharge and/or recycle capability from the 221-BF tanks to tank (TK-24-1), a 12,000 gal feed tank for the waste concentrator. The auto-recycle pump can be switched from the Dispatcher's Office to recycle 221-BB to tank TK-24-1. Indication is also registered in 221-BB. The BCP can be routed to tank TK-24-1 by controls on the Cell 23 panel.

6.7.4 Steam Condensate (BCS) (Fig. 6-14)

The B Plant steam condensate from all process contacted coils and tube bundles exits 221-B to a weir tank located in 221-BB. A portion of the weir tank volume is continuously withdrawn and monitored by a gamma sensitive probe. Grab samples are also drawn from this monitored portion of the stream and the tank is subject to an area radiation monitor in the 221-BB Pit. The stream exits 221-BB continuously to 216-B-55 Crib. Manual diversion is possible to 216-B-64 retention basin. 216-B-64 has installed pumpback capability to 221-B Building.

6.7.4.1 Safety Consideration and Control.

6.7.4.1.1 Flow Measurement. BCS discharge volume is measured by a magnetic flowmeter electronically coupled to the totalizer on the panel board at Cell 23 in the operating gallery. Flow rate is of the order of 30 gal/min depending on the process conditions.

6.7.4.1.2 Monitoring (H-2-36161). The monitoring system consists of two distinct detectors [a NaI(TL) gamma and a NE-102 beta scintillation crystals] coupled to photomultiplier tubes. Each of these assemblies is mounted vertically on a 0.25-in.-thick piece of plastic to separate them from the waste stream; lead shielding reduces the background radiation. The area monitor alarms locally and in the dispatcher's office where this reading is registered on a strip chart record.

6.7.4.1.3 Sampling. Steam condensate is presently sampled on a shift basis in 221-BB Building by withdrawing two 100 mL samples from a valve in the off-line monitor system. The grab samples are field surveyed with a G.M. and sent to the lab where one is analyzed on a rapid turnaround basis for total beta. The remaining sample is held by the lab until discharge volumes are provided by B Plant process engineering. When discharge volumes are obtained, volume proportional aliquots are composited from the shiftly grab samples to generate the monthly inventory composite for analysis.

6.7.4.1.4 Division/Retention Capabilities. The effluent stream can be manually diverted to tank TK-24-1 in the 221-BB Building via the 114 header or through the BCP tank. Piping and valving exist for diversion to the 216-B-64 retention basin.

### 6.7.5 Solid Process Wastes

Solid process wastes can basically be grouped in two categories, canyon wastes and out-of-canyon wastes.

6.7.5.1 High-Dose-Rate Canyon Wastes. This waste stream consists of wastes generated in the canyon area (see Section 3.2). Most of this waste consists of failed equipment such as jumpers, pumps, agitators, etc., and includes 55 gal drums of waste from 225-B (WESF). These wastes are packaged in concrete burial containers and disposed of in the 200 East Area burial trench. Other canyon wastes such as plastics, paper, SWP clothing, etc., are packaged in burial boxes and also disposed of in the burial trench.

6.7.5.2 Low-Dose-Rate Out-Of-Canyon Waste. The waste stream is comprised of wastes generated outside of the canyon, in areas such as the galleries (see Section 3.3), stacks, effluent treatment buildings, and the 212-B Cask loadout building. This stream consists mostly of wastes from decontamination activities, such as rags, plastic, rubber boots, etc. The wastes are packaged in large standard cardboard cartons or 55-gal drums and disposed of in the 200 East Area mixed fission product (MFP) trench.

### 6.7.6 BCE - Chemical Sewer System (Ref. 6-46, 6-47, 6-48)

The B Plant/WESF chemical sewer system collects each month between $4.7 \times 10^6$ and $9.0 \times 10^6$ gal of effluent ranging in pH from 5 to 11 of chemical wastes, water, and steam condensate effluents discharged from buildings in the B Plant area (Table 6-13). For the period from November 1981 to September 1982, the average flowrate was ~2 million gal per

month within a pH range of 6.7 to 10.7, and an average beta concentration for the period was 8.65 x $10^{-4}$ μCi/gal. The streams contributing to the chemical sewer (BCE) and the chemicals contained in the flow are listed in Table 6-13, and these streams are discharged through the main 15-in. vitrified clay pipe that extends north of 221-B Building to the 216-B-63 ditch, located northeast of B Plant and initiating about 1,200 ft east of Baltimore Avenue.

The existing chemical sewer system consists of 6-, 10-, 12-, and 15-in. vitrified clay pipelines. Flowrates are measured by a float-activated flowrate indicator and totalizer at the end of the pipe before entering the ditch.

At manhole #14, the 15-in. clay pipe separates into two 12-in., one 4-in., and one 8-in. vitrified clay headers (Fig. 6-15). The 4-in. header collects effluents from the ammonia storage tank and the 8-in. header collects effluents from the 211-B Tank Farm area and 217-B demineralized water unit. One of the 12-in. headers, connected to manhole #11 and located east of 271-B, receives effluents from a 10-in. clay header that runs between 221-B and the horizontal storage tanks in 211-B Tank Farm. Effluents from the tank car unloading station floor drain into this 12-in. header. The 10-in. header collects effluents from the sodium hydroxide storage area pump basin drain, the sodium hydroxide storage tanks cooling water, steam condensate from the Heating Ventilation Air Conditioning (HVAC) units in each of the stairwells of 221-B (east side) and from the 221-B electrical gallery drain header discharge. The second 12-in. header extends from manhole #14 to manhole #10. At manhole #10 it receives cooling water from the air compressors located in the basement of 271-B and effluents from the floor drains and condensate tanks in 271-B.

A 12-in. clay pipe connects manhole #9 and #10. Manhole #9 receives effluents from a 10-in. clay header that runs alongside 221-B. This header turns south at 225-B and then east at about 150 ft from 225-B, finally terminating 100 ft east of 222-B. This header collects effluents from the 221-B ventilation units in each of the stairwells, chemical wastes from 212-B Cask Station and steam condensate from the steam lines in the 221-B galleries. Effluents from 225-B are diverted to the header through a 2-in. drain pipe located north of the building. This header also receives cooling water and steam condensate from the 225-B ventilation system and steam condensate from 225-BC compressor room. South of 225-B, the header collects water from the 4-in. yard drains located by TK-100 catch tank. The 2902-B water tank overflows to this header through a 6-in. pipe connected at manhole #4. Water and steam condensate from the ventilation systems in Buildings 224-B and 222-B are diverted to this header which also collects rain water from a street drain located north of 224-B.

6.7.6.1 Safety Consideration and Control. Unplanned releases of radioactive solutions through the chemical sewer system have occurred. A survey of the chemical sewer system manholes conducted on November 21, 1980, showed 300 cpm/100 $cm^2$ removable beta gamma and no detectable direct radiation (Ref. 6-47). Corrosion and erosion have caused the pipelines to deteriorate with time such that extreme leakage occurs and tests performed indicate that



9 3 1 2 8 9 9 2 1 4 2

TABLE 6-13. Contributing Streams and Chemical Solutions Drained to B Plant Chemical Sewer (6-45, 6-46).

| Stream | Flowrate range (gallons per day) | Temperature (°F) | Chemical solutions drained to the chemical sewer |
|---|---|---|---|
| 221-B Pipe & Operating Gallery Drains | 0-1,000 | under 100 | Nitric acid |
| 221-B Electrical Gallery Sumps | 0-20 | under 100 | Sulfuric acid |
| 221-B P & O Gallery Steam Condensate | 1,000-2,000 | 212 | Sodium hydroxide |
| 271-B AMU Floor Drains | 0-1,000 | under 100 | Anhydrous ammonia |
| 221-B Scale Tanks | 0-500 | under 100 | Ammonium carbonate |
| 221-B/271-B HVAC | 0-50,000 | under 100 | Sodium citrate |
| 271-B Compressor Room | 5,000-15,000 | under 100 | Sodium carbonate |
| 211-B Area | 0-76,000 | under 100 | EDTA - ethylenediaminetraacetic acid |
| 217-B Floor Drains | 1,000 - 5,000 | under 100 | HEDTA - hydroxyethylenediaminetetraacetic acid |
| 276-B Floor Drains | 0-1,000 | under 100 | $D_2EHPA$ - diethylenetriaminepentaacetic acid |
| 225-B AMU | 0-500 | under 100 | |
| 225-BC Compressor Building | 500-5,000 | under 100 | |
| 2902-B Water Tank | 88,000 | under 100 | |
| 224-B Ventilation System | 0-500 | under 100 | |
| 222-B Ventilation System | 0-500 | under 100 | |

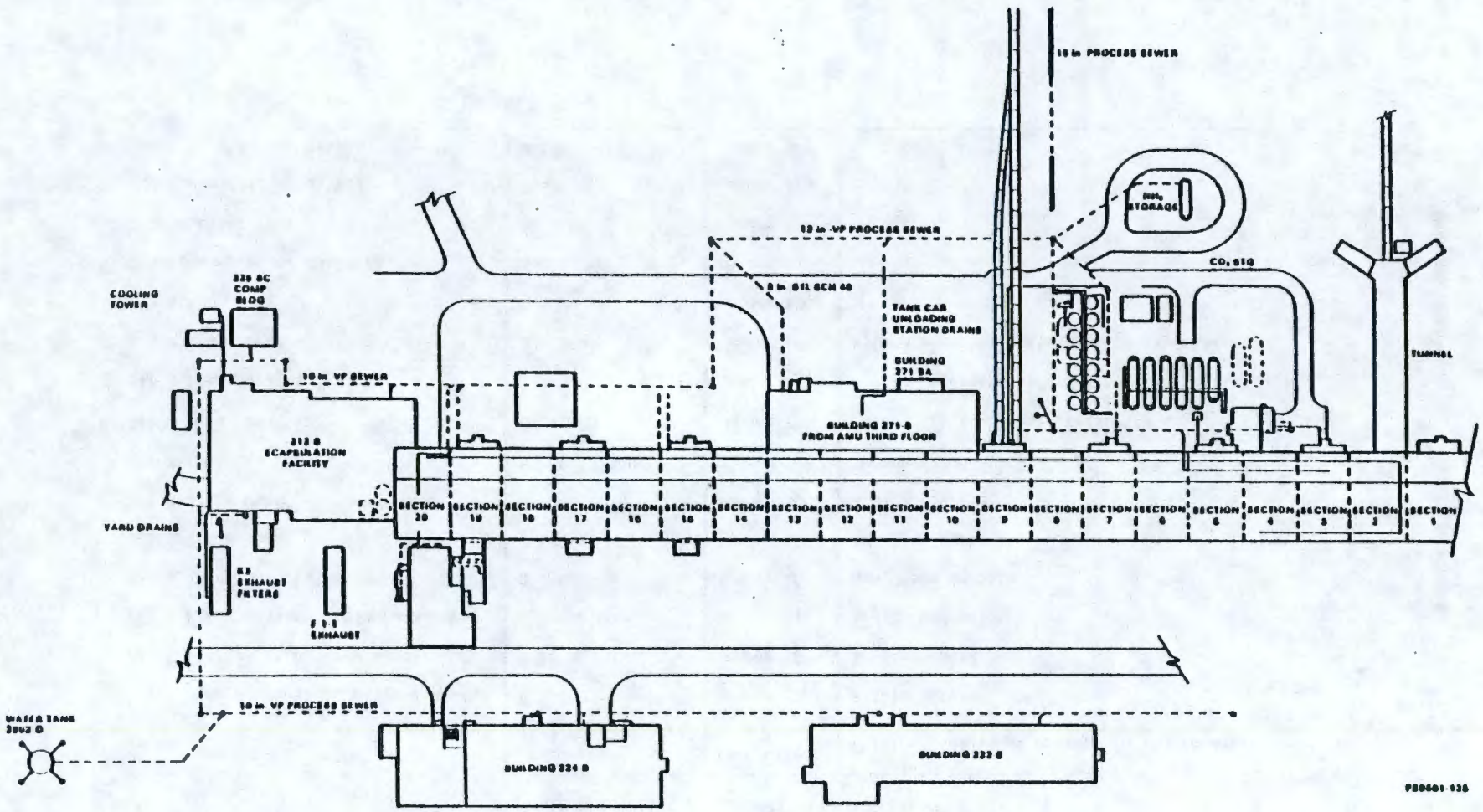


FIGURE 6-15. Chemical Sewer - B Plant Area Map.

approximately half the liquid entering the sewer is lost by leakage in the vicinity of the B Plant facilities. Review of the chemicals normally discharged to the system indicates that hazardous chemicals may be encountered in manholes. A fiberglass liner has recently been inserted into the chemical sewer pipeline to prevent any future leakage.

6.7.6.1.1 Diversion Capability. Chemical wastes and other effluents from 221-B facilities are discharged into a 6-in. stainless-steel header that traverses the electrical gallery. At the east end of the header is located a three-way, motor-operated valve which rotates 90° between two positions: "OPEN" and "CLOSE". The valve is normally operated in the "CLOSE" position for liquids to be routed to the 216-B-63 ditch via the chemical sewer.

A gamma monitor outside the 6-in. header, located 5 ft upstream from the valve, measures the radioactivity level in the line. If the monitor probe measures more than 2 mR/h, the valve automatically switches to the "OPEN" position and diverts the flow to TK-10-1 to be recycled with the normal process waste streams within the B Plant canyon. No special process or radiation monitoring is required to accomplish recycling operations. The motorized valve can be activated from the dispatcher's office for diversion of the effluent stream.

The chemical sewer stream can be sampled via a time proportional sampler in the 2904-EA sample shack or by grab sampling at the 216-B-63 ditch. The sampling capability in the 2904-EA sample building will not be used in the future. Instead, a sampler will be installed at the flow measurement weir. This location will permit flow proportional sampling with concurrent modification to the flow integrator. Flow measurement will be provided by the existing weir (Ref. 6-46).

6.7.6.1.2 Sampling. Five samples are taken, one for monthly composite analysis (1 L), one for pH and total beta (TB) concentration (250 mL), two for nonradiological analysis (250 mL each), and one for the NaI counter (100 mL). The NaI survey instrument will detect cesium contamination ($<6 \times 10^{-6}$ µCi/mL $^{137}Cs$), and thus provides an early detection of unplanned releases. For this reason, the 100 mL sample is surveyed on the instrument within 1/2 h after being taken. Portable survey instrument readings taken of the samples are reported to the dispatcher.

If the proportional sampler is not working, samples are taken at the 216-B-63 ditch by grab sampling. Five samples are taken by this method and labeled as before. A flow totalizer is located in front of the ditch. The totalizer reading is recorded every Monday and the total volume of effluents is computed for each week. Totalizer readings are reported to the B Plant dispatcher and recorded in the log book.

6.7.7 Cooling Water (Ref. 6-50)

Cooling water, used as a heat-transfer fluid in the cooling coils of tanks and vessels containing radioactive solutions, is supplied by 10-in.

headers at 100 psig from both the east and the west ends of the 221-B Building. Cooling water to the individual cell equipment or vessels is supplied through 2-in. or 3-in. lines with orifices and control valves to reduce and adjust the flowrates. The cooling water from the cells is discharged to either a 24-in. or 15-in. header (Fig. 6-16).

The 24-in. cast iron sewer line, laid 2 ft from the south wall, and 10 and 18 ft below grade (1% slope) at the west and east end of the building respectively, extends the entire length of the building. This header is fed by the condensers (E-20-3, E-22-4, E-23-4, E-35-2), BC3, vessel vent #2 jet condensate, 212-B Cask Station and all the cooling water discharged from 225-B.

The discharge of cooling water from discrete groups of cells is combined into five individual headers that merge into a 14-in. Schedule 40 pipe along with the sixth header from Cell 5. This 14-in. header extends eastward to combine with the 15-in. vitrified clay (VC) pipe running north and south at the east end of 271-B canyon. Just north of the 15-in. diverter station, cooling water from the 15-in. sewer empties into the 24-in. line, which continues northward to the 207-B retention ponds where the effluent is collected and sampled alternately in one of the two $5.65 \times 10^5$ gal basins. The collected effluent is then discharged from the east side of 207-B to the 216-B-2-3 ditch continuing eastward to the 216-B-3 pond located east of and outside the 200 East Area fenceline.

- Flow Requirements

  Based upon the premise that potential for contamination is directly proportional to the cooling water discharged to the Gable Mountain and the B Plant pond, a study was conducted (Ref. 6-51) to establish minimum cooling water requirements at B Plant to promote conservation of cooling water. The study concluded that a heat load up to $2 \times 10^6$ Btu/hr can be cooled efficiently at flow rates of 15 gal/min through the coils. Estimated normal flow rates through the 15-in. discharge header from the tank coils is 600 gal/min and 1,605 gal/min through the 24-in. header from the condensers (E-20-3, E-22-4, E-23-4, BCS).

6.7.7.1 Safety Consideration and Off-Normal Conditions. Monitors are installed in the system to detect release of radioactivity and signals are transmitted to the dispatcher's office in 271-B. In the event of an emergency, an automatic diversion system is available for use. Valved crossover lines from the 6-in. subheader to the 24-in. sewer permit continued operation of selected coils.

6.7.7.1.1 Monitors. The 221-B detectors are sodium-iodide crystal and photomultiplier tube for monitoring gamma radiation only. They are maintained at maximum sensitivity to detect leaks rather than quantify them. The detector for the 24-in. and 15-in. lines is lowered through a vertical vitrified clay standpipe and suspended in a pool of water created by a dam installed to restrict flow. Signals from the monitor are transmitted to the dispatcher's office where a radiation meter, stripchart, and audible alarm

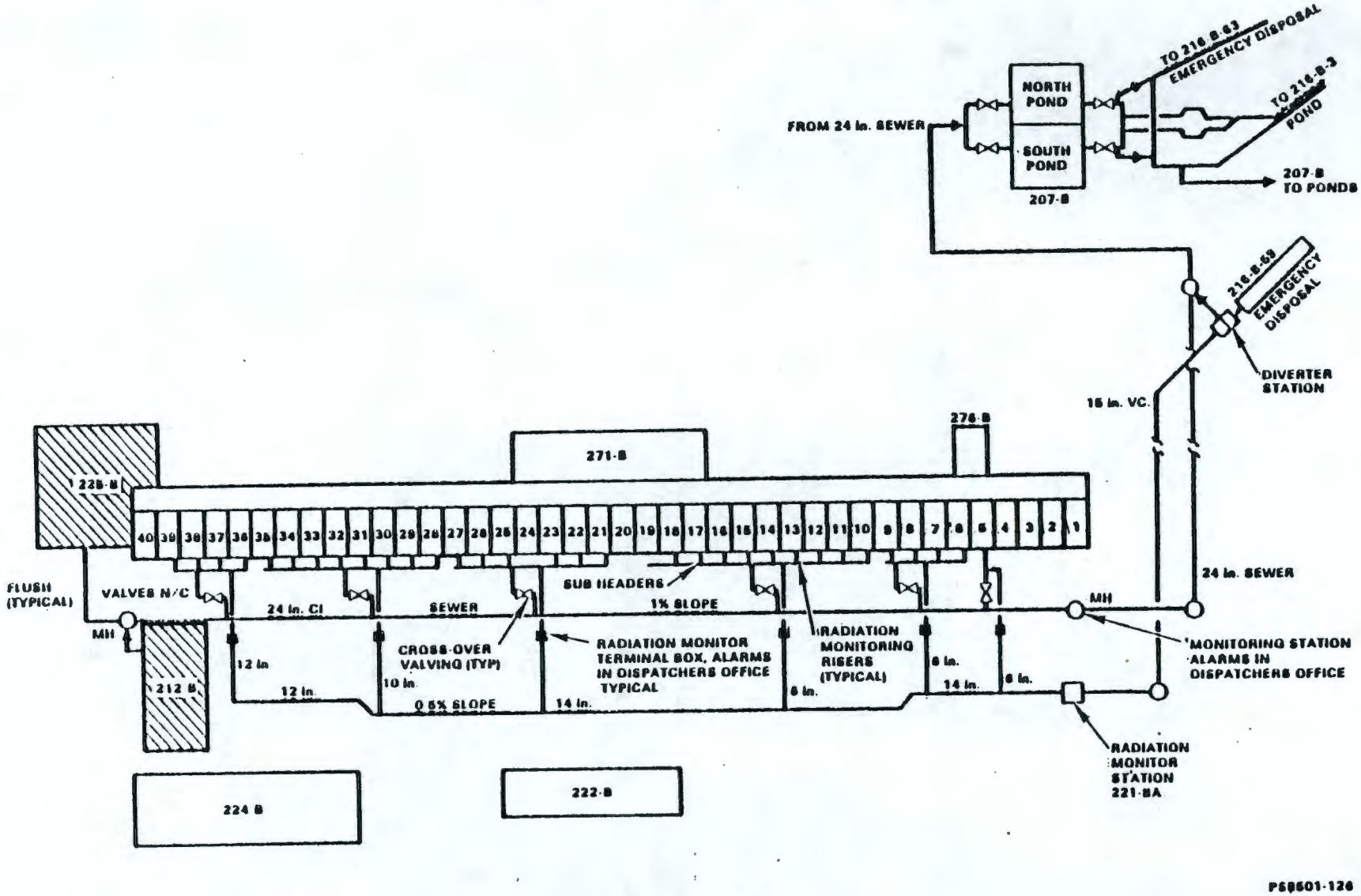


FIGURE 6-16. Cooling Water Disposal at B Plant.

are located. The linear ratemeter, with a range of 0 to 10,000 cps, is at 0 to 50, 0 to 500, or 0 to 1,000 cps range with the high alarm setpoint at 80% of the scale.

- Three-Inch Monitor Risers

  In the event of suspected high activity in the cooling subheader system, additional 3-in. test risers are located above each (except Cell 10) of the cell's 4-in. cooling water exit lines. These risers have no in-place monitors but stand ~2 ft above grade and run directly underground, providing access for radiation surveys via portable instrumentation (GM probes).

6.7.7.1.2 Calibration. Every alternate Wednesday, a response check of the monitors is performed and on a quarterly basis they are pulled and calibrated with a dry source.

6.7.7.1.3 Sampling and Analysis. Two 100-mL bottled samples from each pond, one for the control sample and the other for a monthly composite, are obtained prior to discharge to the 216-B-2-3 ditch.

For each 10-batch composite of the control sample, pH and TB analyses are performed on a routine basis. For the monthly composites collected throughout the month, the data is considered as our record inventory and is reportable to the U.S. Department of Energy. The analyses include pH, TB, total alpha (TA), uranium, $^{90}Sr$, Gamma Energy Analysis (GEA - primarily $^{137}Cs$) and tritium.

The two samples delivered to the 222-S Laboratory, the routine control sample and the composite sample, are handled by two different groups. The shift support personnel are responsible for the control sample, while the environmental laboratory personnel perform the analysis of the monthly composite sample.

6.7.7.1.4 Inadvertent Release of High Radioactivity. In the event of detection of high activity in the 15-in. header, that stream is automatically diverted to the 216-B-59 emergency retention bladder. In the event of high activity (greater than allowable for surface disposal) detected in the 24-in. line, the stream can be manually diverted at the 207-B Basin from the normal 216-B-2-3 ditch to the emergency backup ditch 216-B-63 which is normally used for disposal of B Plant chemical sewer waste - BCE.

## 6.8 GENERAL SAFETY CONSIDERATIONS AND CONTROL

### 6.8.1 Hydrogen Formation (Ref. 6-53)

The net rate of decomposition of water under the influence of ionizing radiation depends markedly on the nature and concentration of the solutes and impurities. Radical scavengers can decrease the concentration of hydrogen and hydroxyl ions and effectively inhibit the recombination reactions.

Other ions such as $Fe^{++}$, $Cu^{++}$, and $Ce^{+4}$ in acid solution are also efficient radical scavengers.

The lower flammability limits of hydrogen in dry air are 4.1% for upward, 6% for horizontal, and 9% for downward propagation. In general, the quantity of hydrogen burned increases as the concentration of hydrogen increases above 4%. About 50% of the hydrogen will burn in a 5.6% mixture, and substantially all of the hydrogen is consumed in a 10% mixture.

The upper flammability limit for hydrogen-air mixtures may be taken as 74%. Flammability limits widen as the temperature of the unburned gas is increased. Increasing the pressure tends to narrow flammability limits; the effect is small. Mixtures well within flammability limits ignite with an exceedingly small input of energy. Common sources of ignition are sparks from electrical equipment or sparks caused by the discharge of small accumulations of static electrical charges. The ability of hydrogen to diffuse into the flame more rapidly than other gases helps maintain the necessary concentration for flame propagation despite the fact that the spontaneous ignition temperature of a hydrogen-air mixture is 585°C and the 4.1% hydrogen-air mixture has a flame temperature below this.

Hydrogen concentration in the vessel void area is controlled to <2% volume by the addition of dilution air either into the top of the vessel or from below the surface of the liquid. The dilution air effectively flushes the hydrogen from the vessel and into the vessel vent system. Tables 6-14 and 6-15 define the applicable dilution air rates for B Plant vessels. The possible consequences of hydrogen explosions are discussed in detail in Chapter 9.

6.8.1.1 Hydrogen Yields in Aqueous Sodium Nitrate Solute by Co-60 Gamma-Ray Radiation. As described in the reference documents, nitrate ion at 1.0M g-mol/L of water results in a nominal 3-fold reduction in hydrogen generation.

6.8.1.2 Heat Generation in Vessels and Tanks. Generation of heat by nuclides ($^{90}Sr$ = 23.2 Btu/h KCi, $^{137}Cs$ = 6.4 Btu/h KCi) present in the solution is dissipated by water circulated through the cooling coils. Failures of cooling coils have been attributed either to the faulty design and fabrication of the coils or mechanical failure at the point, where the coil supports are attached to the flange (Ref. 6-34). The consequences of the loss of cooling coils have been evaluated (Ref. 6-49) and are further elaborated in Chapter 9.

Figure 6-17 illustrates the impact on some of the parameters affecting the time period required to respond to an inadvertent loss of cooling water event. Mechanistic assumptions were made to account for variations in sodium (Na/Cs molar ratio - 2,000 to 0.15, Na/Sr molar ratio 10:1), specific gravity and initial temperature. Heat absorbed by tank and heat lost by radiation and convection (~10 to 15%) have not been accounted for to provide a conservative analysis.

TABLE 6-14. Vessel Dilution Air Rates for Vessels Where Air is Introduced Below the Solution Level.

| Fission product | Minimum SCF of air/h KCi | |
|---|---|---|
| | ≥0.1M nitrate | <0.1M nitrate |
| $^{89}Sr$ | 0.007 | 0.021 |
| $^{90}Sr$ | 0.014 | 0.042 |
| $^{95}Zr$ | 0.010 | 0.030 |
| $^{95}Nb$ | 0.010 | 0.030 |
| $^{103}Ru$ | 0.007 | 0.021 |
| $^{106}Ru$ | 0.020 | 0.060 |
| $^{141}Ce$ | 0.003 | 0.009 |
| $^{144}Ce$ | 0.017 | 0.051 |
| $^{91}Y$ | 0.007 | 0.021 |
| $^{137}Cs$ | 0.010 | 0.030 |
| $^{147}Pm$ | 0.008 | 0.024 |

TABLE 6-15. Vessel Dilution Air Rates for Vessels Where Air is Introduced Above the Solution Level.

| Distance from air purge nozzle exit* to liquid surface (ft) | Minimum air flow (SCFM) |
|---|---|
| 3 | 1.0 |
| 4 | 1.0 |
| 5 | 1.5 |
| 6 | 1.5 |
| 7 | 1.75 |
| 8 | 1.75 |
| 9 | 2.0 |
| 10 | 2.0 |
| 11 | 2.25 |
| 12 | 2.25 |
| 13 | 2.5 |
| 14 | 2.5 |

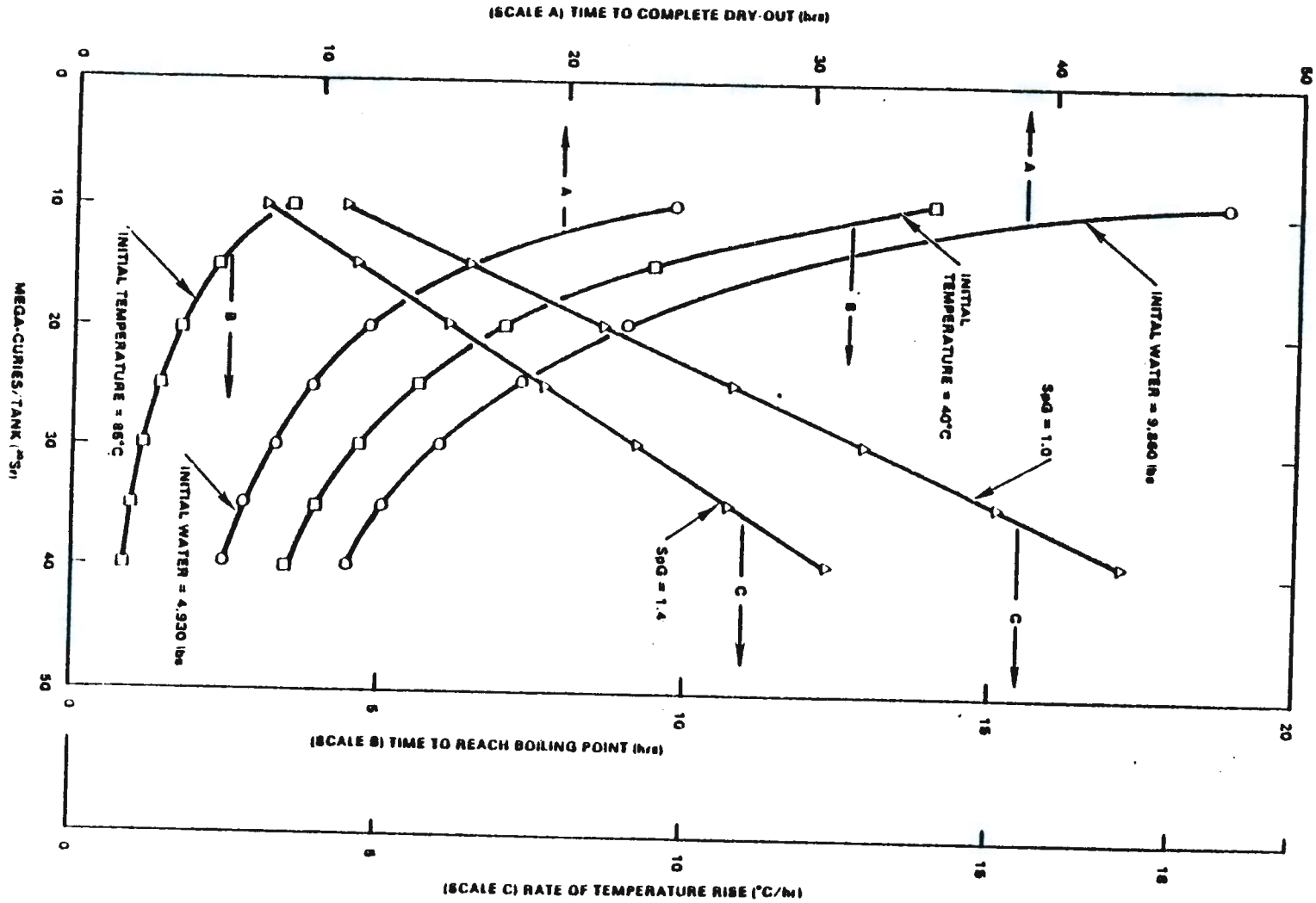


FIGURE 6-17. Time to Reach Boiling Point and Dry Out, Rate of Temperature Rise vs. MCi Content of Tank.

Recently, using the computer code (HEATING-V), a heat transfer analysis of tanks and centrifuge (Ref. 6-29) has been performed. Tank TK-7-1, a vessel with a capacity of 5,000 gal, was evaluated with a 19 MCi of strontium-nitrate solution. Boiling occurred at 18 h from the initial loss of cooling and the contents did not dry up until 5 d later. The centrifuge was analyzed with 20 gal of ruthenium, plutonium, americium, neptunium, uranium, cerium, and strontium-nitrates. The peak waste temperatures reached 76°F and 80°F for the solids on the side and the bottom, respectively, after 8 h.

6.8.1.3 Radiolysis of Citric Acid Solutions (Ref. 6-57). The radiolysis of citric acid ($H_3Cit$) in strontium solutions proceeds slowly over a period of days at megarad/h dose rates, and undesirable by-products can be eliminated by proper adjustment of the hydrogen ion concentration.

Synthetic strontium product solutions with varying concentrations of citric acid, nitric acid, and strontium nitrate were irradiated by a $^{60}Co$ source. An average of 7.00 mol of hydrogen ion were destroyed for every mole of citric acid destroyed. Reaction rates were on the order of $10^{-3}$ M/h at dose rates of $2.66 \times 10^6$ rads/h. The average G value for the radiolytic destruction of citric acid is 0.80 mol/100 eV.

Formation of dark-brown radiolysis products takes place when the ratio of hydrogen ion concentration to citric acid concentration is <4:1. When this ratio is <3:1, precipitation of solids takes place. Solids formed by solutions low in hydrogen ion concentration were found to contain an average of 44.0% Sr and, in some cases, accounted for all the strontium originally present in solution.

The radiolysis of nitric acid in the presence of citric acid was more when compared with the radiolysis of nitric acid alone.

6.8.2 Ammonia Safety (Ref. 6-58, 6-59, 6-60, 6-61)

Ammonia and/or its compounds are used in the recovery of cesium and consequently found in the waste concentration system. The eluent, ammonium carbonate used in the ion-exchange process, is formed according to the following stoichiometric reversible reactions:

$$NH_3(g) + H_2O(\ell) \longrightarrow NH_4OH(\ell)$$

$$H_2O + 2NH_4OH + CO_2(g) \longrightarrow H_2CO_3 + 2NH_4OH$$

$$H_2CO_3 + 2NH_4OH \longrightarrow (NH_4)_2CO_3(\ell) + 2H_2O$$

A certain amount of ammonia vapor will exist in equilibrium with the hydroxide and the carbonate solution of ammonia. Increasing the temperature, or at a fixed temperature increasing the ammonium ion concentration or the $NH_4^+/CO_3^=$ mole ratio, will cause the ammonia concentration to increase.

At atmospheric pressure, the flammability range of ammonia in dry air is 15 and 28% for upward propagation of the flame, but these limits tend to narrow as the water vapor is increased, until at 10.8% $H_2O$ and 20.8% $NH_3$ flames cannot survive. With dry oxygen-ammonia mixture, the lower limit is 15.2% $NH_3$. At 10 atm, the explosive limits are 16.8 and 28% and these limits are narrowed with the addition of water vapor until above 9% $H_2O$ and 19.8% $NH_3$, no explosion will occur. The vapor phase above 3M $(NH_4)_2CO_3$ - 2M $NH_4OH$ eluent solution is flammable in the temperature range of 39 to 49°C, based on empirically determined partial pressures of carbon dioxide, ammonia, water, and flammability data of air - $NH_3$ - $N_2$ -$H_2O$.

6.8.2.1 Mitigative Features. All equipment exposed to ammonia environment is Class I, Division I, Group D location as defined in the National Electrical Code (Ref. 6-62). The ammonia concentration in the vessel vapor space is maintained below 10 vol%. All electrical equipment (except for thermohms) is deactivated in the event of a spill of more than 500 gal of ammonia solution or a leak in the addition line to the cesium eluent and storage tank (TK-21-1). The ammonia line is purged of the ammonia vapor at an air flow rate of 3 cfm for at least 3 min but at a flowrate not to pressurize the cesium eluent and storage tank (TK-21-1).

The pressure relief valves on the anhydrous ammonia storage (TK-SN-172) and the pressure relief valve directly downstream from the heat exchanger vaporizer are set at 265 psig maximum and the relief valves (PV-172-3 and PV-172-4) on the supply line to (MNB-173) and cesium eluent and makeup tank (TK-21-1) are set at 25 psig maximum (Ref. 6-62). Potential consequences of ammonia explosions are discussed in detail in Chapter 9.

6.8.3 Organic Solvent (Ref. 6-63 through 6-66)

The organic solvent, 30% TBP in kerosene, is of limited flammability. TBP has a flash point of 295°F, Class III B flammability, and kerosene has a flash point of 100°F, Class II flammability. Low probability fire-initiating events may nevertheless occur and lead to combustible vapor formation which sustains burning over extended periods.

6.8.3.1 Heat of Combustion (Table 6-16). The net heats of combustion of the solvents were measured in an adiabatic bomb calorimeter.

The pressure and temperature dependence of the heat of combustion is negligible. Mixtures of the solvents, TBP, D2EHPA, and NPH have a heat combustion that is an additive function of the individual heats of combustion.

Contacting these solvent mixtures with dilute aqueous nitric acid has a slight depressing effect on the heat of combustion per gram. In the mixtures TBP/NPH (20/80 vol. ratio) and 0.3M D2EHPA, 0.2M TBP in NPH this depression is <2%, but would be expected to increase with increasing TBP content.

6.8.3.2 Flash Points, Burning Rates, and Auto-Ignition Temperature (Ref. 6-63). Flash points for several process-grade solvents were determined using a Marten closed cup flash point tester. The auto-ignition temperatures of some process-grade solvents and mixtures were determined and are tabulated in Table 6-17. Burning rates are given in Table 6-18.

6.8.3.3 The Effect of Solvent Temperature on Fire Development (Ref. 6-63, 6-64). It is possible for the temperature in this plant to rise above the planned temperatures because of a malfunction of control systems and operational error. Temperatures were selected that covered the range that might be expected and tests run of the fire development characteristics.

A 4-in. layer of water was put on the floor of the 12 $ft^2$ simulated cell and the water was heated to the set temperature. Then, the 5 gal of NPH solvent was ignited and the temperatures in the cell recorded. The results were recorded at several points in the cell where temperature elements were placed. The burning rates in mL/min are shown in Table 6-18.

The results show that a fire develops significantly faster when the solvent is at a high temperature. No tests were attempted at higher temperatures because of the danger of a flare up or explosion.

6.8.3.4 Red Oil Explosion (Ref. 6-63, 6-64). "Red Oil," a complex mixture of nitrated decomposition products of TBP and heavy-metal nitrate compounds such as uranium, plutonium, or thorium nitrates, with color varying from yellow-orange to red and a specific gravity range of 1.1 to 1.6, is produced by a chemical reaction between nitric acid, degraded TBP, and heavy-metal nitrates. Once found, the "red oil" phase may be separated during further processing operations, and forms as a dense third phase in the aqueous and organic system. Red oil can explode upon heating in the presence of concentrated nitric acid and/or heavy-metal nitrate systems at temperatures above 135°C depending upon the applied pressure and chemical composition of the mixture. Violent reactions of TBP decomposition products and nitric acid (no heavy metals present) have been produced in the laboratory at initial pressures of from 1 to 30 atm and temperatures >150°C.

Laboratory studies attempts to produce red oil in boiling systems containing B Plant solvent and high concentrations of strontium nitrates, rare earth nitrates, and nitric acid have been unsuccessful. Addition of a small amount of uranyl nitrate (0.1M) and radiolytically degraded solvent (to <1 x $10^8$R) did not yield red oil after more than 72 h of boiling under constant reflux. These conditions were considerably more stringent than those normally expected in B Plant.

TABLE 6-16. Heat of Combustion.

| Solvent | ΔH, cal/gram | Std. dev., cal/gram |
|---|---|---|
| NPH | 10,512 | 22 |
| TBP | 6,877 | 59 |
| D2EHPA | 7,435 | 2 |

TABLE 6-17. Flash Point and Ignition Temperatures.

| Solvent | Flash point, °F | Ignition temperature, °C |
|---|---|---|
| NPH | 156 | 215 ± 3 |
| 10% TBP in NPH | 158 | 222 ± 5 |
| 20% TBP in NPH* | 161 | 225 ± 5 |
| 30% TBP in NPH | 165 | 233 ± 5 |
| 40% TBP in NPH | 167 | 240 ± 5 |
| 50% TBP in NPH | 169 | 245 ± 5 |
| TBP | 275 | 385 ± 3 |
| HDEHP | 385 | |
| B Plant 1AX Stream (0.3M HDEHP, 0.2M TBP, NPH) | 167 | |

*When 20% TBP in NPH was contacted for 2 h with 2M $HNO_3$, the flash point of the resulting organic exceeded 230°F. At this point, the organic was smoking and had turned from yellow to bright green. No actual flash point could be determined.

TABLE 6-18. Burning Rate of NPH.

| Initial solvent temperature, °C | Burning rate, mL/min |
|---|---|
| 40 | Flame not sustained |
| 45 | 0.8 |
| 50 | 0.9 |
| 60 | 1.1 |
| 65 | 1.3 |
| 70 | 1.5 |
| 75 | 1.8 |
| 80 | 1.9 |
| 85 | 1.5 |
| 90 | 1.7 |



9 3 1 2 8 9 9 2 1 5 5

The B Plant solvent consists of 0.2M TBP and 0.3M D2EHPA in an NPH diluent. Small amounts of extracted uranium (up to 0.002M) will be present in the solvent at some points in the process and nitric acid solutions which have contacted this solvent will be thermally concentrated.

Nevertheless, it may be possible under adverse plant conditions to form nitrated solvent (red oil) so that a very slight probability exists of a red oil explosion in the concentrator (E-5-2). Another concentrator, (E-23-3), which can potentially contain solvent, is in B Plant; however, it is operated under alkaline conditions thus mitigating the possibility of red oil explosions.

6.8.3.4.1 Mitigative Features. The explosive red oil reaction requires the presence of a significant amount of TBP and a temperature in excess of 150°C in the absence of heavy metals. None of these conditions normally exist in the concentrator (E-5-2). The following safeguards are provided to prevent a red oil reaction:

- The presence of appreciable organic in the concentrator (E-5-2) is rapidly indicated by abnormal concentrator operation (foaming, loss of vessel vacuum, reduced boil-off rate). As little as 1 gal of solvent should be detectable in the concentrator.

- Continuous boil-off overhead of small organic inputs to the concentrator prevents an organic phase accumulation in the concentrator.

- The temperature in the concentrator (E-5-2) is kept below that at which the red oil reaction can be initiated by limiting the steam pressure to <35 psig and the steam temperature to <135°C.

- The quantity of solvent introduced to the concentrator is minimized. Feed which is pumped from tank TK-28-2 to the concentrator is decanted from the bottom of the unagitated tank. The residence time in the tank is sufficiently long that any readily separable solvent which entered the tank from the 1B Column would collect as a light phase on top of the aqueous phase. Instrumentation is installed in the tank to detect the presence of an organic layer. Accumulated solvent may be removed from the tank as required.

- Over 100 vessel-years of successful concentrator operation have been accumulated using similar preventive measures without a red oil explosion.

### 6.8.4 Radioactive Contamination

When solutions are transferred using steam jet eductors, a potential hazard is created when improper jetting techniques are employed. The condensation of steam in a pipe at the end of a transfer creates a vacuum which could draw radioactive solutions into the pipe or operating gallery piping. Air is blown through the pipe at the end of the transfer to purge the steam and prevent the suckback of radioactive solutions into operating areas.



9 3 1 2 8 9 9 2 1 5 6

Gassing of jets is avoided, particularly when transferring the highly concentrated strontium solutions involved in the process. This situation causes an increase of the radioactive contamination in the vessel vent and exhaust air system. Overfilling (>90% of overflow capacity) of canyon vessels is avoided since this can also increase the suck-back hazard.

It is a routine practice not to fill process vessels (including vessels used exclusively for long-term product storage) above 80% of overflow capacity to minimize the possibility of overflowing solution from a vessel to the cell.

### 6.8.5 Localized Heat Areas

A liquid cover is maintained over strontium or cesium solids to avoid localized hot areas.

The major solids problem has been associated with the cesium concentrator and storage vessels (Ref. 6-67). Conversion of the cesium carbonate to the nitrate can reduce some of these potential problems due to the better solubility of sodium nitrate (730 g/L at 0°C) over sodium carbonate (71 g/L at 0°C). Also, possible impurities in the system such as calcium, magnesium, strontium, and iron are insoluble as carbonates but soluble as nitrates. A sample of the plant cesium carbonate nitrated by Battelle Northwest Laboratory showed that there are some solids associated with the nitrate system, but they were not cesium.

### 6.8.6 Chemical Reactions

Acid base reactions, such as during the 1AF makeup in (TK-29-2) or the neutralization steps in tanks (TK-24-1, TK-25-1, and TK-25-2) produce heat. The vessel temperature and pressure are closely monitored during these steps to ensure that a vacuum on the vessel is maintained by keeping the temperature below 60°C. The addition of sodium carbonate to acidic solutions during the 1AF makeup also results in the rapid evolution of carbon dioxide gas which could pressurize the vessel unless added slowly.

The caustic strike process requires the preparation of concentrated sodium hydroxide by dissolving solid sodium hydroxide pellets in water in a scale tank. The dissolution process is exothermic (~450 Btu/lb) and care must be taken not to add the pellets too rapidly.

### 6.8.7 Tank Overfill

It is a routine practice not to fill process vessels (including vessels used exclusively for long-term product storage) above 80% of overflow capacity to minimize the possibility of overflowing solution from a vessel to the cell. Such an overflow, possibly caused by faulty instruments or operator miscalculation, would greatly increase the contamination present in the canyon cell which in turn could result in significantly higher contamination

in the canyon exhaust air to the main exhaust filters and in the filtered air sent to the environs.

6.8.7.1 Tank Pressurizations. Pressurization of tanks beyond the vessel vent capacity will result in airborne contamination spread to the cells and potentially to the canyon or the operating gallery. Allowing transfer steam jet to "gas out" for an extended period must be guarded against as this will pressurize a tank rapidly.

Another means of pressurizing a tank is by acid-base reactions. Sodium carbonate (2.5M) addition to the first sulfate strike is usually required to adjust the strike's pH, while nitric acid (12.2M) is added to the metathesis waste to acidify it. Both these additions will result in the evolution of carbon dioxide gas (up to 4,500 $ft^3$/min) and thus, must be made cautiously to avoid pressurizing the vessel. The carbonate addition rate is limited by administrative controls to 10 gpm, and the nitric rate to 5 gpm. The vessel's vacuum gage is watched closely for signs of pressurization.

6.8.8 High Pressure Spray Pump

The pump in the operating gallery used to spray cleanout solution to the centrifuge bowl (or flush solution to the centrifuge case) must be operated with care and protective clothing worn to guard against leaks from this high-pressure system. This is particularly important when the cleanout solution is a strongly acidic or caustic solution.

6.8.9 Loss of Utilities

General electrical, ventilation, water, steam, and air losses are covered in Emergency Procedures (Sec. 6.3.6, Ref. 6-68).

6.8.9.1 Loss of Electricity (Failure of both normal feeders). The instrument air compressor and the emergency potable air compressor are checked to determine if the equipment is operational or requires a restart. The concentrators are shut down per the required procedures. All transfers are terminated and the jets are air blown. All chemical additions to and/or from scale tanks and steam to tank coils are stopped and lines are blown out with air. Water flow to vessels containing 6.0M $NH_3$ solutions (TK-38-1, TK-38-4, TK-38-5, and TK-38-2) is maintained at a minimum to keep temperatures below 39°C as well as to self-heating solutions to maintain temperatures at 45°C $\pm$ 5°C. Dilution air is maintained.

6.8.9.1.1 Temperature Control. Simmering of tanks is discontinued and temperature maintained at 45 $\pm$ 5°C. Tanks requiring periodic agitation are kept under close surveillance to preclude temperature excursions.

6.8.9.1.2 Monitoring Systems Which are Without Power. Several essential monitoring systems are not backed by the emergency power supply. The monitoring systems requiring special sampling and monitoring are cooling water sub-head drains, steam condensate from the condenser (E-5-2) including

the permanently routed diverter valve to TK-24-1, steam condensate header, BCS sampler and monitor in 221-BB, canyon air sampling and monitoring, operating and pipe gallery air sampling and monitoring, and monitors in 212-B.

6.8.9.2 Loss of Steam. A complete loss of steam, caused by trouble at the power house or rupture of the steam supply line, would require all processes and equipment to be placed on standby status until restoration of steam service. The vessel ventilation jets are manually switched to air if the automatic system has not functioned, and the vents operated until the air temperature to the filters drops to 110°C. The tube bundle of the concentrator in use is switched to air and any operating jets are air blown to prevent suck-back in the pipe and operating gallery. If steam pressure is lost, the tube bundle will automatically switch to air.

6.8.9.3 Loss of Process and/or Instrument Air. There is an intertie that exists between the process and instrument air supplies in addition to the diesel-driven compressor on automatic standby.

- Loss of Process Air

  The tube bundles of the non-operational concentrators are pressurized with water and process transfers are terminated by placing gang valves in the maintenance position.

- Loss of Instrument Air

  The loss of instrument air results in the loss of weight-factor, specific gravity, and pressure monitors of all process vessels and columns.

6.8.9.4 Loss of Water. The concentrators and the processing activities are shut down according to procedures. The feed to the concentrators is shut off and the steam flow is reduced rapidly, after which the tube bundles are air blown for 5 min. The cooling water is turned off to the condensers.fter evaluation of heat-generating inventory in the concentrators and carefully monitoring temperatures, the emergency water is sparingly valved to the tube bundles to maintain temperatures below 50°C.

All transfers are stopped and steam turned off to the jets and jets are air purged. Emergency procedures are involved to activate backup systems.

6.8.9.4.1 Water and Temperature Control and Surveillance. Raw water header pressure is recorded until reading is stabilized, simmering of all vessels is discontinued, and water flow is adjusted to maintain a maximum temperature of 50°C in all vessels containing heat-generating inventory, a temperature of 39°C in vessels with 8.0M $NH_3$ and a temperature of 60°C in vessels containing organics.

Agitators are started in vessels not requiring additional dilution air. The temperature of the tank (TK-10-1) is recorded regularly and the water to the cooling coils adjusted as necessary. The cooling coil inlet valves to

all tanks in 211-B are closed with the exception of the hydroxyacetic acid tanks (SF-120, SF-121, and SF-122) which require water to maintain temperature below 40°C for corrosion control purposes. No significant amounts of hydroxyacetic acid is currently stored in these vessels.

The Vessel Vent 1 jet (J-22-4) and Vessel Vent 2 jet (J-35-2-6) vessel vent booster jet are switched from steam to air and cooling water is shut to the condenser (E-22-4) and tank coils (TK-22-1 and TK-25-2). The vessel vent booster jet (J-21-2) is adjusted to a minimum steam usage while maintaining a vacuum on the concentrator (E-38-6), condenser (E-38-7), and the eluent receiver tank (TK-38-4).

Dilution air is maintained to all vessels. All unnecessary raw water usage is identified and discontinued. Shiftwise surveillance of jet (J-22-9) and equipment is continued and the cooling water subheaders, sewers, retention basins, and the 291-B Stack are constantly monitored.

6.8.10 Cell Drain Line Failure (Ref. 6-69)

Leaks from wall nozzles, tanks, and the hot pipe trench are collected at the low points of the cell into a 24-in. internal-diameter vitrified clay pipe embedded in concrete, which drains into the deep cell with the waste collection tank (TK-10-1). Solutions from here are either jetted to the waste handling system or reprocessed for fission product recovery.

The integrity of cell drain line can be breached by physical deterioration or uneven settling of the 221-B Building causing caulked joints to open or cracks to form. Solution containing high radionuclide concentrations could enter the cell drain system from leaking vessels or transfer systems including the hot pipe trench.

6.8.10.1 Source Term. Assuming that 150 gal of 8,000 Ci/gal $^{90}Sr$ solution entered the drain system, about 28,000 Btu/h of decay heat would be generated by this solution.

6.8.10.2 Accident and Effect. Temperatures in the soil and concrete by the absorption of the radioactive solution, could approach 2,000°F after 2 to 3 wk. This could cause dehydration of concrete resulting in further deterioration of the encasement and line integrity. Subsequent transfer of low-heating solutions through the line could cause the "hot spot" to move further away from the line and leakage of organic solvent into the area could cause an explosion to occur.

A small leak over a period of time could cause an accumulation of significant quantities of fission products in the concrete or soil. At which point elevated temperatures could occur resulting in the deterioration of the line and an increase in the potential for larger leaks during subsequent passages of solution through the line. The absorptive properties of the soil and the location of the cell line makes the release of radioactivity to the environment highly improbable.

6.8.10.3 Mitigative Features. The following safeguards are provided for minimizing the amount of solution which enters the cell drain system and for assuring line integrity:

- The first transfer through a newly installed process route is closely monitored for solution leakage.
- Leak-detectors are installed in the openings of the cell floor drains. An alarm sounds whenever about 250 ml of conductive solution enters the cup and will alert personnel so that corrective action can be initiated to stop the flow of liquid to the drain.
- A quarterly leak check of the cell drain line is made to determine the line integrity. A volumetric measurement technique is used.
- The volume of solution in process vessels is maintained <80% of capacity to limit the potential for overflowing a vessel. High- and low- level alarms are installed on all tanks to warn of high or low-volume levels.
- Solution transfer volumes are verified from shipper and receiver tank volume measurement systems. Volumes shipped and received are recorded and the records are maintained on a continuing basis.
- Each time cell cover blocks are removed, a visual inspection is made to look for evidence of leaks. Leaks found are eliminated.

6.8.11 Vessel Coil Failure

Vessel coils are heat transfer tubes used for heating and/or cooling. Based on the severity of service, the potential of failure of the cooling and heating coils is at least one order of magnitude more severe than coils used only for cooling. The disposal path of effluents are segregated and their disposal is by distinctly different systems.

Coils and tube bundles may fail as a result of corrosion, mechanical vibration, or mechanical damage from the installation, operation, or removal of an agitator. Coils used for heating and cooling may fail as a result of thermal shock.

6.8.11.1 Source Term. The quantity of radionuclide released is a direct function of the concentration of the solution, the size of the hole, the pressure differential as the driving force and the duration of the problem.

6.8.11.2 Mitigative Features. Several measures have been taken to assure minimum risk of a failure in a heat transfer surface. These include:

- Quality assurance inspection of the equipment was made before use including hydrostatic testing of the coils or tubes.*

- Operability tests are performed on the concentrators before they are placed into service.*

- Frequent hydrostatic tests are made to evaluate the condition of the heat transfer system by blanking the discharge line during shutdowns.*

- Instrumentation is installed to measure liquid level and specific gravity. Unexpected changes are investigated to determine their cause.*

- An automatic air pressure blow is established on the concentrator tubes if the pressure falls below a given value, thus maintaining a positive pressure on the tubes.*

- Steam and air services are not connected to heat transfer surfaces on vessels requiring cooling service only. With positive pressure of cooling water on the heat transfer surfaces in the event of tube failure, gross leakage should occur into the vessel.** Experience has indicated, however, that, depending apparently with shape and location of the leak, some leakage can occur into the tube. Administrative controls are in place to assure that the cooling water will not be turned off in case of a leaking coil.

### 6.8.12 Criticality

Residual amounts of fissile material are present in the wastes transported to the Waste Fractionization Building. The concentration is dependent upon the type of waste. A buildup of fissile material can occur and a mass-balance on plutonium is kept not only for accountability, but to ensure that accumulation of fissile material does not lead to criticality.

## 6.9 PROCESS CONTROL CENTERS (DISPATCHER'S OFFICE AND THE OPERATING GALLERY)

Control and support of the processes are largely conducted from the operating gallery and the Aqueous Makeup (AMU) area with the dispatcher's office serving as a focal point for the dissemination of plant operation information. The operating gallery contains instrument panelboards, which graphically display the various pieces of operating equipment interconnected

---

*Applicable to both heating and cooling coils.

**Applicable only to cooling coils.

by flow lines in the proper relative position, with the control instrumentation physically located at the points where the process control is monitored. The graphic panels and instrumentation provide quick visual appraisal of process conditions.

### 6.9.1 Control Panels in the Operating Gallery

The graphics on the 35 panels, which are protected from hazards associated with the process, provide representation of process vessels interconnected by color-coded stream lines indicative of the in-or-out flow from the vessels. The color-coding scheme is 'gold' for primary or product stream, 'red' for waste recycle, 'green' for cold chemical feed, 'black' for the utilities (air, water or steam), and 'white' for the control or instrument sensing line. Process vessels, depicted by black borders in the shape of vessels with the associated instrumentation located within the boundaries of the vessel, may not be sequenced on the panel but the sequence can be determined by the linking process stream lines. Symbols are used to indicate direction, jets, temperature elements, diaphragm-operated valves and valve controllers.

### 6.9.2 Dispatcher's Office

The continuously manned dispatcher's office is located on the second floor of the 271-B Building. Audio-visual alarms alert the dispatcher to conditions which require notification of responsible individuals for prompt and corrective action. The canyon building communication network is the means by which the dispatcher keeps track of operating personnel in various locations of the building.

All doors providing access to the canyon deck or the crane cabway equipped with magnetically operated locks which are controlled from the dispatcher's office. Telephones are located at these doors for personnel to obtain the dispatcher's permission to enter the building. A communication network is provided on the main deck of the 221-B Canyon. The crane operator is also in constant communication with the dispatcher, both by a telephone and a two-way radio loud speaker system. An alarm system is provided on the deck level to clear personnel during unsafe conditions. In addition to the control of the movement of personnel to the operating building, the dispatcher controls the process steps. Movement of chemicals and process solutions from one part of the building to another is cleared by the operators through the dispatcher's office, using the gallery telephones located on each of the panel board. While the emphasis is on prompt notification, the duties of the dispatcher cover a spectrum of activities outlined in the following paragraphs.

6.9.2.1 Coordinate Communications. The dispatcher maintains communication with personnel or sample truck driver through PAX and outside phones and radio, and acknowledges audible and/or flashing light alarms functioning on the panelboard in the dispatcher's office.

6.9.2.2 Access Control. The dispatcher maintains a training card index containing pertinent information relating to mask fitting, radiation worker, and respirator training required for the canyon or Cell 40 entry. Additional information such as escort requirements, self-survey or facility orientation are often times included. The entry to the canyon and Cell 40 via 225-B as well as the crane activity is controlled by the dispatcher. Entry to the canyon is granted by the dispatcher if no operations are underway which preclude personnel access. A log of canyon entries is maintained by the dispatcher.

6.9.2.3 Administer Routine Check Sheets. The dispatcher ensures that routine check sheets are issued, returned, and available to management.

6.9.2.4 Administer Analytical Requests and Reports. The dispatcher receives sample requests, relays them to the sampling team and ensures that sample tags are made out correctly and proper information is put into the computer.

6.9.2.5 Record Data. The dispatcher records BCS, BCP, BCE, and CNP/CSP sample GM and NaI survey readings and laboratory analytical results in the sample result log, which is the official record. The results are compared with posted limits and the management is notified when GM and NaI survey checks and/or analyses are outside the prescribed limits.

The dispatcher on the graveyard shift, based upon the data gathered on the storage tank surveillance data sheet, plots the weight factor on the "B Plant Storage Tank Trend Analysis Chart." The dispatcher also assists in updating records of incoming and outgoing transfers and keeps the management informed of the trends.

6.9.2.6 Inform Supervision. The dispatcher transmits pertinent information to those requiring it, particularly his manager and process control personnel as required.

6.9.3 Alarms in the Dispatcher's Office

The alarms in the dispatcher's office, clustered and identified by discrete colored lights on the panelboards, monitor gaseous and liquid effluents, the 291-B Filter System, the fire protection system, liquid levels, equipment performance, and miscellaneous alarms and data. These alarms are under constant surveillance by the dispatcher.

6.9.3.1 Airborne Contamination. Areas of potential contamination are continuously sampled and have audible alarms at each location and by section in the dispatcher's office.

The Vessel Vent #2 gaseous effluents are sampled and continuously monitored prior to discharge into the 24-in. sewer. The monitor has an indicator, a visual and an audible alarm in the dispatcher's office.

Contamination areas such as 221-BB Building, the SWP lobby, R-13, and 212-B change rooms, laundry storage and the railroad areas are routinely sampled. These areas are normally free of contamination and continuous air monitors are not used. However, air samples are monitored daily with a portable GM instrument and deviations in conditions or a reading above background is reported by the monitor to appropriate supervision.

6.9.3.2 Fire Protection. The instrumentation group for the fire protection consists of heat detectors in the canyon cells and the 291-B filter buildings.

6.9.3.2.1 Canyon Cell Heat Detectors. The trip setpoints for these heat detectors are 225°F through 250°F indicating a fire in the cell. The audible alarms and light boxes are indicative of high temperature conditions in the cells. Fire extinguishing and filter bypass equipment are triggered by these heat detectors.

6.9.3.2.2 291-B Filter Buildings. The temperature of the canyon exhaust air stream is measured at ten locations near the filter, in the filter ducts and in the air tunnel manhole near the R-3 canyon entrance and recorded on a 12-point Foxboro chart recorder with a range of 0°F to 300°F. A blinking light "High Temperature Filter and Tunnel" alarm is activated indicating a fire in the duct or the filters.

## 6.10 PROCESS INSTRUMENTATION AND CONTROL SYSTEMS (Ref. 6-74)

The radiochemical processing within the waste fractionization building is remotely controlled and instrumentation is used to measure and respond automatically to control process flows. The parameters measured or monitored include flow, liquid level, specific gravity, weight factor, liquid level interface location, speed, pH, vibration, sound, motor amperage, temperature, and radiation. Most instruments for measuring and control consist of several component elements integrated to function as a system. Descriptions of the various instruments are found in Ref. 6-72 and 6-73.

### 6.10.1 Instrument Application Category

Process Control Engineering has compiled a list of process instruments (Ref. 6-73) and identified them according to the following categories (Ref. 6-74).

6.10.1.1 Safety Instruments (Category A). Instruments defined by Quality Assurance Level I and Level II as being essential for the safe containment of radioactive and toxic material in order to assure safe shutdown and the protection of plant and personnel.

6.10.1.2 High Accuracy Instruments (Category B). Instruments having a high accuracy requirement including instruments used for nuclear accountability.

6.10.1.3 Primary Process Control Instruments (Category C). Instruments normally used for controlling the process.

6.10.1.4 Backup Process Control Instruments (Category D). Instruments that are utilized to control the process in case of failure of Primary Process Control Instruments.

6.10.1.5 Operator Aid Instruments (Category E). Instruments that are not used directly for process control but are required for process support functions.

6.10.2 Listing of Instrumentation

The complete listing of instrumentation for process control is tabulated in Ref. 6-73. The listing of safety instruments in the following tables identified by B Plant Process Control Engineering are categorized under flow, temperature, leak detection systems weight factor pressure, and radiation systems.

6.10.3 Liquid Effluents

Low-level wastes discharged to cribs and/or ponds are continuously monitored and sampled regularly. Upon indication of high activity, these streams are diverted to special trenches or recycled, and investigative and mitigative actions are initiated.

6.10.3.1 The 15-Inch Cooling Water Header and its subheaders are continuously monitored and an increment of activity above the set limit opens an electrically operated valve to divert the contaminated water to 216-B-59 retention basin until the resolution of the problem.

6.10.3.2 The 24-Inch Cooling Water Header which receives cooling water from the concentrator condensers and the Vessel Vent #2 jet is continuously monitored and sampled upon receipt of an alarm. Upon the validity of the alarm, the water streams are isolated and the contaminated water retained in the pond.

The amplifiers for these instruments are located in the instrument building adjacent to 221-BB Building. Range modifications are made at these amplifiers and checked against panelboard indicators only.

6.11 PROCESS SAMPLING (Ref. 6-75)

Samples of process solutions are obtained at deck level by the use of an air jet which draws solution from a process vessel through a small sample cup. The jet, cup, and remotely operated valves are located in a shielded pit at deck level. At B Plant, there are three kinds of samplers: Standard, Dual, and pH.

### 6.11.1 Standard Sampler (Fig. 6-18)

The stainless steel sampler assembly is located in a 2 ft deep pit in the deck between cells, with a removable lead shield cover. A 1/2-in. stainless steel riser, with a ball valve screwed on the end and a special splash plate on the bottom, emerges through a hole in the lead cover to provide a passage for withdrawal of samples. A handle extending through a hole in the lead cover is used for manipulation of a ball valve located upstream in the inlet line.

The air lift operates with an air bleed line with a 1/64-in. orifice at the terminal end in the sampler box to provide air along with high specific gravity solution that must be raised 20 to 25 ft by a jet operated by 90 psi of air. There is a 3/16-in. orifice in the line between the jet and the sample cup to reduce the flow to ~3 gpm.

The sampler is connected to the inlet and the outlet lines from the cell vessel by connectors held together by a modified type C-clamp and sealed with a wedge-shaped neoprene gasket. There are 36 standard type samplers installed in the B Plant.

### 6.11.2 Dual Sampler

This is a modification of the standard sampler. The sampler assembly fits on two inlet lines from two different cell tanks, each having their own block valve but using a common jet, sample cup, riser, and discharge line. These samplers, each with its own air-lift intake located in a common sampler pit, draw solution from a tank and discharge into the same tank or to a different tank. There are ten of these samplers (26-1/26-3*, 31-1*/31-2, 34-2*/34-3, 36-1*/36-2, and 37-1*/37-3). The numbers marked with an asterisk (*) identify the return tank numbers.

### 6.11.3 pH Probe Sampler (Fig. 6-19)

The pH monitoring probe is an addition to the standard sampler. It is one of the single most important controlling factors of the solvent extraction streams. The difference between the hydrogen-ion activities of the standard solution and the process stream results in the development of a difference of electrical potential across the thin glass wall of the bulb. The electrical potential is proportional to the pH of the solution in contact with the center surface of the electrode tip. Determination of the pH is based on the measurement of the difference in electrical potential developed between a pH-sensing glass and a reference electrode, both immersed in the process stream. The flow chamber, an extension of the standard sampler, and is provided with a 'threaded opening' into which the pH assembly can be inserted to contact the sensitive part of the pH electrode. A flex line joins the flow chamber to provide a buffer solution for calibration or rinse solution for cleaning the pH electrode. These electrodes can tolerate a total exposure of about 5 x $10^8$ Rads. There are

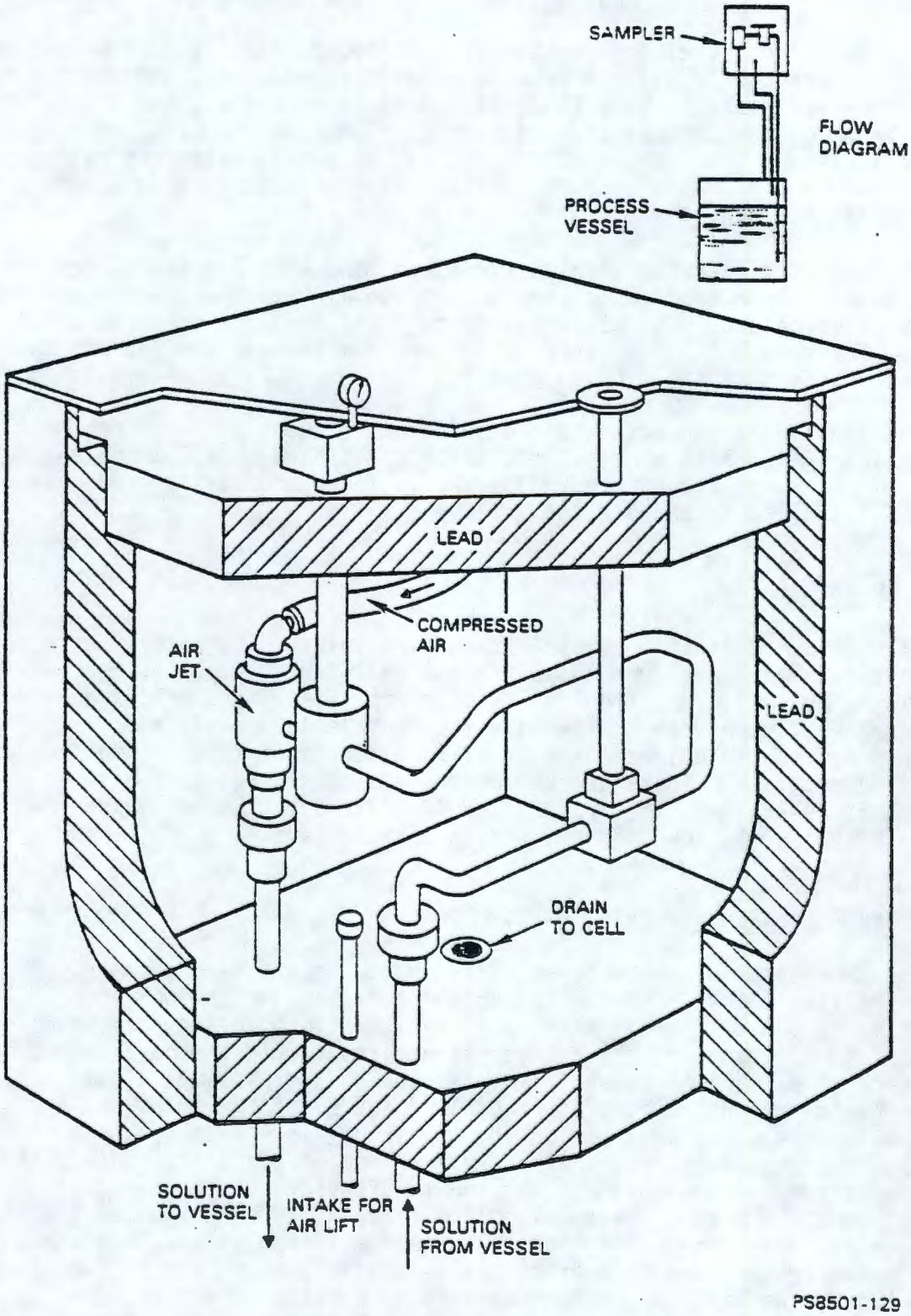


FIGURE 6-18. Standard Sampler.

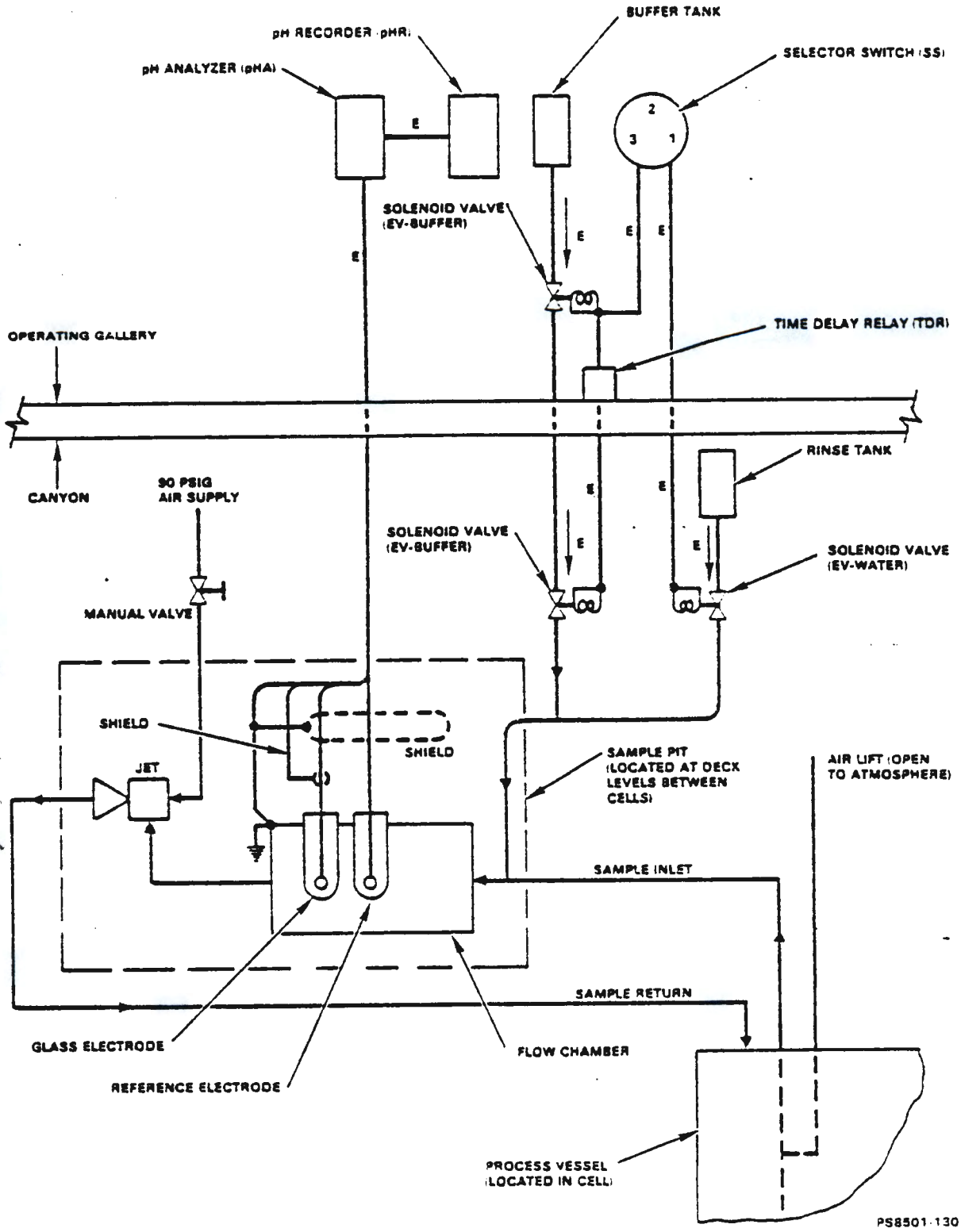


FIGURE 6-19. pH Probe Sampler.

14 pH monitoring sample locations at (11-2, 14-2, 23-1, 24-1, 25-1, 25-2, 1B-28-1, 29-2, 29-3, 1AW-30-1, 38-1, 39-1, 39-2, and 39-4).

6.11.4 Sampling

Sample carriers have been designed to provide appropriate shielding and confinement of radioactive solutions.

6.11.4.1 Doorstop Sampling. The sampling schedule is obtained from the dispatcher with a green tag for each sample. The tag identifies the sample, its size, and the requirement for a lead-lined doorstop.

The doorstop sample transporter (Fig. 6-20) is a stainless steel assembly consisting of the shielded handles, pipette assembly, and the correct pipette. The assembly is checked for airtightness. The pipettes are color coded for size. The doorstop has a plastic insert and neoprene gasket in the plug. A model with an inner lead liner for shielding high radiation is available.

Appropriate valves are opened or closed and the sample is withdrawn by the insertion of the trombone pipette assembly into the riser till the tip of the pipette touches the bottom.

The sample is drawn out by the syringe-plunger action through the inserted "trombone" pipette assembly in the riser. The sampling assembly is withdrawn, observed quickly for sufficient sample in the pipette which is then positioned into the doorstop insert, and turned clockwise while pressing downward gently till it is engaged. The "trombone" is unscrewed from the pipette and lifted into the disposal carrier after breaking the handle away from the plastic trombone.

6.11.4.2 pH Probe Sampling. These samplers can be controlled from the operating gallery if the sampler block and jet air supply valves in the canyon are left open. The panelboard control is set on "off" when not sampling and "circulate" when sampling.

6.11.4.3 Trap Sampling. This method is preplanned to 'trap' certain samples in the sample cup before the entry of a sample team. This is accomplished by leaving the sample block valves and air to the sample jet open to allow control from the operating area.

6.11.4.4 Bulk Sampling (Fig. 6-21). A volume of sample >1.6 mL requires bulk sampling when the sample volume ranges from 25 to 100 mL, and which can be accommodated within the cavity, with or without an additional lead liner, of a shielded container called a 'pig.'

The volume of bulk sample is limited by the (50 c/gal) Ci concentration, the type of radiation expected, and the amount of shielding provided by the pig.

9 3 1 2 8 0 9 2 1 7 0

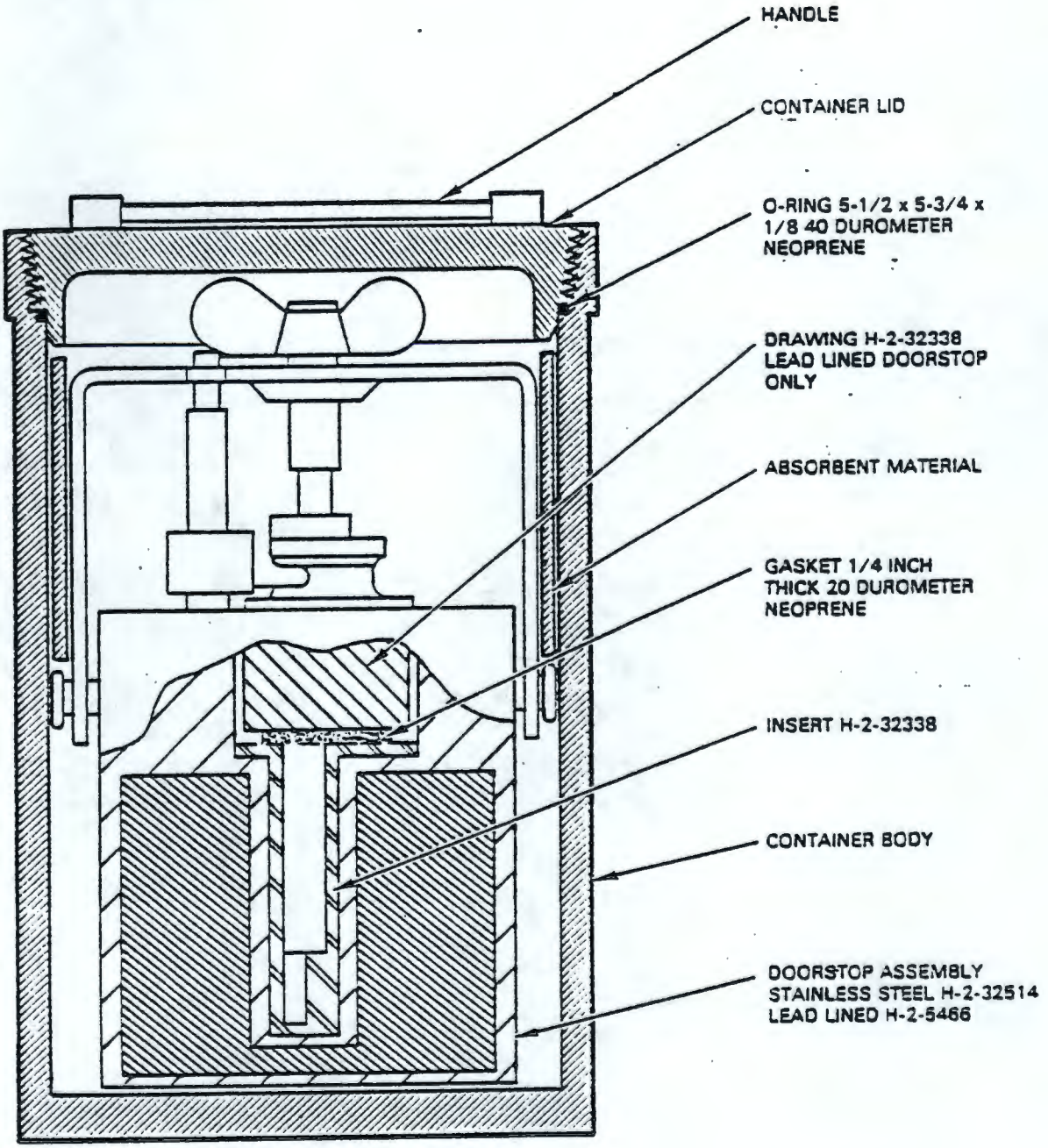


FIGURE 6-20. Sample Transporter.

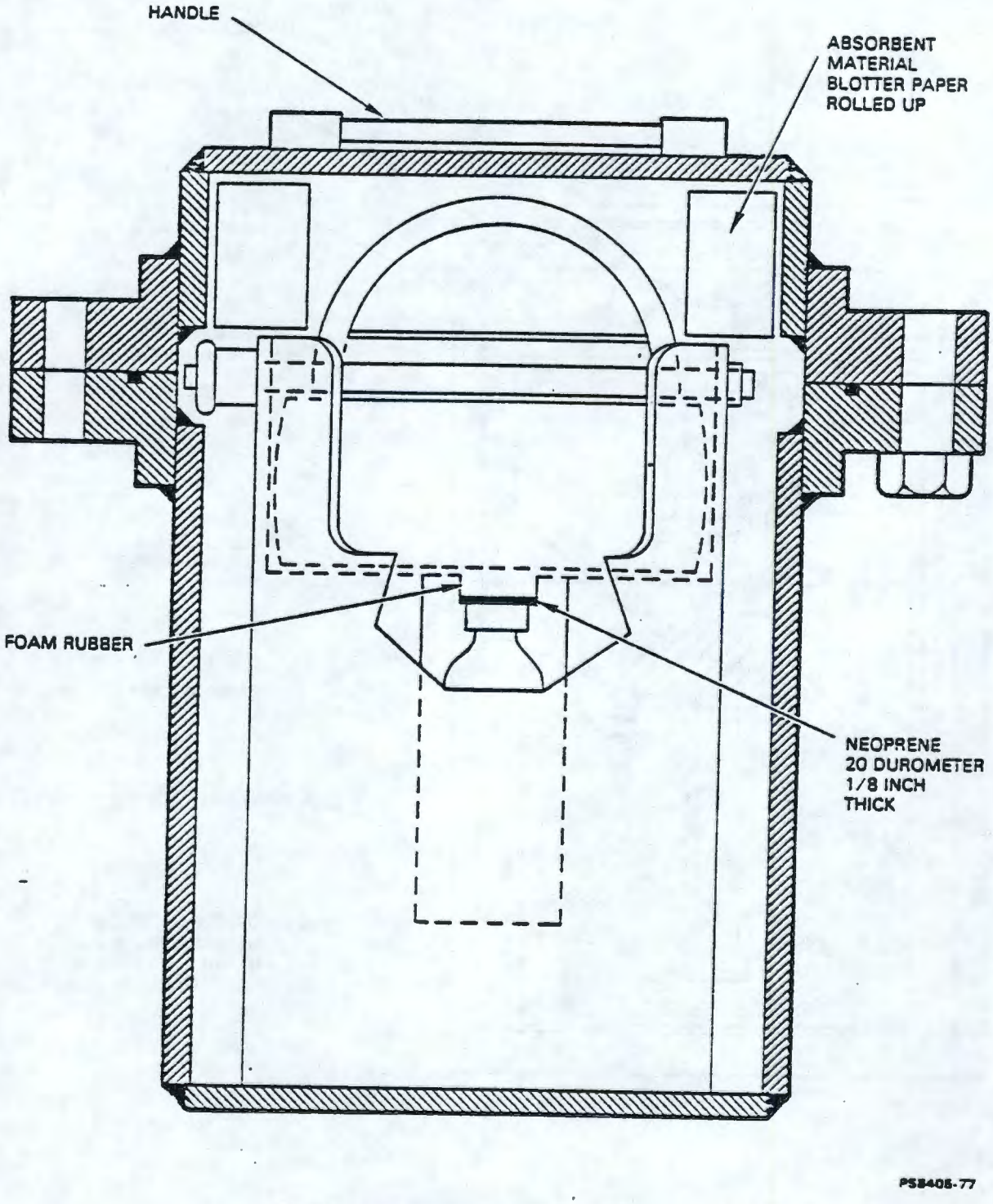


FIGURE 6-21. Bulk Sample Container.

Kits, containing all the items required in the special sampling technique, are packaged in a 3-in.-dia. and cylindrical mailing tube which also becomes the waste disposal container after completion of the sampling.

The sample is withdrawn from the sample cup through a 36-in. length of 1/6-in. internal diameter plastic tubing to the bottle or vial. The end of the tubing, which goes through the riser ball valve sealed by a rubber stopper, extends into the bottle through a drilled hole in the cap. This cap is fitted with an extension made from 1/4-in.-outer-diameter plastic tube that has to be cut off to a certain length corresponding to the volume of the particular sample to be taken. This extension tip remains in the bottle after the sample is taken and the transfer tubing is pulled out.

Solution transfer terminates upon the solution level reaching the tip of the tubing inside the bottle. The contaminated transfer line or transfer tubing is purged by the atmospheric air, while maintaining the circulation jet in operation, by pulling of the end of the transfer line from the bottle before removing the end from the riser.

6.11.5 Safety Consideration and Control

Hazards associated with sampling are reduced by use of specially engineered equipment and are administratively minimized by job preplanning, training, and approved procedures.

6.11.5.1 Radiation Safety. Radiation Work Permits (Ref. 6-80) for canyon work, and safety rules posted in the SWP lobby and R-13 entrances, are strictly adhered to by all members of the sampling team.

Contamination control is maintained by keyed locks which assure that the dumbwaiter and stairwell doors are opened one at a time and not both at the same time.

Background radiation at sampling ports is reduced by flushing the sample riser, cleaning or replacement of the riser ball valve, and cleaning of any spilled or dripped solution. In taking samples the sampling party must have a Radiation Protection Technologist (RPT) at all times.

The radiation dose rate at the Cell 15 trombone disposal tube is to be controlled by periodic cleaning.

6.11.5.2 Sampling Team. The "sampling team" normally consists of two operators and a RPT. One of the individuals on the sampling team is given the responsibility for timekeeping, using a stop watch, and calculating an estimate of the radiation exposure received by all individuals as the job proceeds. The Hanford Multi-Purpose Badge Dosimeter is worn by each employee.

6.11.5.3 Sampler Pressurization. A precaution is painted at the four-way valve to always turn valve from "circulate" to "off" - never from

"circulate" to "buffer" or "rinse". The actuator on the valve for the air-to-sampler jet closes fairly slowly (~10 s) and if the discharge side of the sampler is plugged, it could cause the sampler to be pressurized during circulation. If the four-way valve is then turned from "circulate" to "buffer" or "rinse", it is possible to blow the contamination out of the air-break funnel in the canyon. This problem is eliminated if the four-way valve is always turned to "off" position for 10 to 15 s before turning to "rinse" or "buffer," as required by procedures and operator training.

6.11.5.4 Crane Work. Crane work must be halted prior to allowing the sampling team to enter the canyon. The sampling crews are not permitted in the canyon while the crane operator is removing or replacing jumpers or equipment in the cell, or while impacting is underway. The blocks, jumpers, yoke racks, etc. on the pipe trench should be situated on the walkway and pipe trench so safe passage can be made on the pipe trench away from any open cell. If this cannot be done readily, then a guard rail is placed on the south end of the cell to insure safe passage.

6.11.5.5 Bulk Sample Handling. Safe handling of radioactive bulk samples is dependent upon the shielding provided in the exclusive B Plant pigs. Any other style of pig does not provide adequate shielding. No substitution may be tolerated. Also, when sample volumes of 35 mL are requested, it is mandatory to use the inner lead liner to provide the additional shielding on the bottom and sides. The lead cap must be placed on the standard lid to provide the extra shielding on the top.

The procedure provides for the vial or bottle to have attached a length of twine. Each end of the twine terminates in a masking tape "handle." This arrangement is very important, and the twine handles must be preserved enroute so that they are intact for use of the laboratory, as a means for remotely removing sample from the pig via the manipulators. The equipment at the laboratory is very limited and does not provide much flexibility so no deviation from this may be tolerated.

The design of the pig provides a locking pin which holds the carrying handle and lid to the pig. Should this pin come out, the pig will come loose from the handle-lid and be very hazardous. No substitute from this specified locking pin is tolerated.

## 6.12 REFERENCES

6-1. DOE Order 5820.2, Management of Transuranic Contaminated Materials.

6-2. High-Level Waste Management and Characterization at the Hanford Plant Site, J. L. Deichman, Rockwell Hanford Operations, (ANS Topical Meeting), Richland, Washington.

6-3. SD-WM-PCP-002, June 1983, B Plant Current Acid Waste (CAW) Cesium and Strontium Recovery Draft Flowsheet, S. M. Joyce, et al., Rockwell Hanford Operations, Richland, Washington.

6-4. ARH-564, April 22, 1968, B Plant Recovery of Cesium from Current Acid Wastes by Phosphotungstate Precipitation, D. E. Larson, Atlantic Richfield Hanford Company, Richland, Washington.

6-5. ARH-F-10, January 31, 1977, Tentative B Plant Current Acid Waste Flowsheet, R. F. Carlstrom and J. W. Gehrke, Atlantic Richfield Hanford Company, Richland, Washington.

6-6. Internal Letter No. 65920-83-111, June 1983, "By-Products Separation Cesium Strontium Recovery from CAW Flow Diagram," K. S. Kalkofen to J. P. Sloughter, Rockwell Hanford Operations, Richland, Washington.

6-7. Internal Letter No. 65411-81-336, September 30, 1981, "Composition of CAW to B Plant," A. C. Coroneos to Distribution, Rockwell Hanford Operations, Richland, Washington.

6-8. Internal Letter No. 65460-82-208, May 19, 1982, "PUREX FSAR N-Reactor Fuel Characteristics," M. W. Gibson to G. K. Allen, Rockwell Hanford Operations, Richland, Washington.

6-9. PFD-P-020-00001, September 1982, PUREX Flowsheet - Reprocessing N-Reactor Fuels, G. K. Allen, et al., Rockwell Hanford Operations, Richland, Washington.

6-10. ARH-2185, January 1971, Atlantic Richfield Hanford Company Radioactive Waste Management Program, D. E. Larson, Atlantic Richfield Hanford Company, Richland, Washington.

6-11. SD-WM-PCP-001, June 1983, Current Acid Waste (CAW) Processing B Plant Head End Draft Flowsheet, S. M. Joyce, Rockwell Hanford Operations, Richland, Washington.

6-12. ISO-100, August 31, 1967, Waste Management Technical Manual, J. S. Buckingham (edited by ISOCHEM, Inc.), Richland, Washington.

6-13. SD-RE-PCP-001, September 30, 1983, Current Acid Waste (CAW) Cesium Recovery by Phosphotungstic Acid (PTA) Precipitation, S. P. N. Singh, Rockwell Hanford Operations, Richland, Washington.

6-14. ARH-CD-917, March 15, 1977, Evaluation of Phosphotungstic Acid Process for Removal of Cesium-137 from PUREX Current Acid Waste, (Process Study WFEPE-77-1), Rockwell Hanford Operations, Richland, Washington.

6-15. ARH-2946, December 14, 1973, Feed Preparation for First Cesium Purification Process Test WFEPE 74-1, J. P. Sloughter, Atlantic Richfield Hanford Company, Richland, Washington.

6-16. RHO-CD-739, June 1979, Laboratory Evaluation of an Ion Exchange Process for Removing Cesium from PUREX Acid Waste Solutions, J. S. Buckingham, Rockwell Hanford Operations, Richland, Washington.

6-17. BNWL-288, June 1967, Recovery of Cesium from PUREX Alkaline Waste with a Synthetic Zeolite, L. A. Bray, Battelle Pacific Northwest Laboratory, Richland, Washington.

6-18. BNWL-CC-2804, May 15, 1969, Evaporation of Cesium Ion Exchange Eluate and Recovery of Ammonium Carbonate: Pilot Plant Studies, G. L. Richardson, Battelle Pacific Northwest Laboratories, Richland, Washington.

6-19. BNWL-180, January 1966, Absorption of Trace Ions from Intermediate Level Radioactive Wastes by Ion Exchange, B. W. Mercer, Battelle Pacific Northwest Laboratories, Richland, Washington.

6-20. BNWL-732, May 1968, Unidirectional Cesium Loading, Scrubbing and Elution of AW500 Zeolite Columns, L. L. Ames, Jr. and B. W. Mercer, Battelle Pacific Northwest Laboratories, Richland, Washington.

6-21. No. 56-6610, 1965, ION Exchange Technology, (edited by F. C. Nachad and Jack Shubert, et al.), Academic Press, Inc., Publishers, New York.

6-22. No. 58-6078, 1958, ION Exchange Resins, Robert Kumin, John Wiley and Sons, Inc.

6-23. Duolite Ion-Exchange Resins, I. M. Abrams, "Selective Removal of Heavy Metals from Waste Waters by Ion-Exchange and Absorbent Resin," Diamond Shamrock Chemical Company, Redwood City, California.

6-24. RHO-F-7, January 1980, Cell 18 Ion Exchange Flowsheet, W. E. Poling, Rockwell Hanford Operations, Richland, Washington.

6-25. RHO-F-8, January 1980, Ion Exchange Flowsheet for Final Purification of B Plant Cesium, R. F. Carlstrom, Rockwell Hanford Operations, Richland, Washington.

6-26. ARH-2633, November 1972, Destruction of Duolite ARC-359 Resin With Nitric Acid, D. A. Puryear, Atlantic Richfield Hanford Company, Richland, Washington.

6-27. Unnumbered Letter, September 29, 1971, Exposure of Duolite ARC-359 to Caustic Solutions, J. A. Partridge to H. L. Brandt and D. E. Larson, Pacific Northwest Laboratories, Richland, Washington.

6-28. BNWL-B-248, November 1973, Cesium Purification With Zeolon-900 Cation Exchanger, Battelle Pacific Northwest Laboratories, Richland, Washington.

6-29. Internal Letter No. 65920-81-255, October 29, 1981, "Establishment of Increasing Load Limit to 3.0 Megacuries on Cell 18 (T-18-2) Ion Exchange Column", M. W. Stevenson to J. P. Sloughter, Rockwell Hanford Operations, Richland, Washington.

6-30. Internal Letter No. 65920-82-045, February 12, 1982, "Establishment of 3.0 Megacurie Load Limit on Cell 18 (T-18-2) Ion Exchange Column", N. W. Kirch to J. P. Sloughter, Rockwell Hanford Operations, Richland, Washington.

6-31. BNWL-829, November 1968, Removal of $^{137}Cs$ From Alkaline Condensate Wastes, Battelle Pacific Northwest Laboratory, Richland, Washington.

6-32. RHO-F-6, November 1979, B Plant Cesium Clarification Flowsheet, W. E. Poling, Rockwell Hanford Operations, Richland, Washington.

6-33. ARH-3037, March 29, 1976, Cesium Purification by Ion-Exchange Hot Startup Tests, Process Test WFEPE-76-3, J. P. Sloughter, Atlantic Richfield Hanford Company, Richland, Washington.

6-34. HW-SA-3211, October 18, 1963, Solvent Extraction Processes for Recovery of Radioactive Materials, G. L. Richardson, General Electric, Hanford Atomic Products Operation, Richland, Washington.

6-35. NOT USED.

6-36. NOT USED.

6-37. ARH-CD-614, April 16, 1976, IC Column Optimization Process Test WFEPE-76-3, J. W. Gehrke, Atlantic Richfield Hanford Company, Richland, Washington.

6-38. ARH-CD-553, February 2, 1976, Evaluation of Sodium Citrate Chelation in the Solvent Extraction Process for Strontium Recovery, J. W. Gehrke, Atlantic Richfield Hanford Company, Richland, Washington.

6-39. ARH-CD-691, May 1976, Strontium Recovery from PUREX Acidified Sludge, H. J. Klem and W. G. Wilson, Atlantic Richfield Hanford Company, Richland, Washington.

6-40. ARH-2973, January 28, 1974, Sulfate Precipitation Flowsheet for Purification of Crude Strontium Products from B Plant Solvent Extraction, W. G. Wilson, Atlantic Richfield Hanford Company, Richland, Washington.

6-41. PFD-B-017-00002, Rev. A-0, April 1984, Sulfate Precipitation Flowsheet for Purification of Crude Strontium Products from B Plant Solvent Extraction, S. T. Willett, Rockwell Hanford Operations, Richland, Washington.

6-42. ARH-3017, March 1974, Caustic Strike Flowsheet for Final Purification of B Plant Strontium, W. G. Wilson, Atlantic Richfield Hanford Company, Richland, Washington.

6-43. RHO-F-14, September 1980, Caustic Strike Flowsheet for Final Purification of B Plant Strontium Solutions, G. W. Lohman and W. E. Poling, Rockwell Hanford Operations, Richland Washington.

6-44. RHO-CD-1504, September 1980, Waste Generation Reduction Study - FY 1980, Solid Waste Engineering Unit, Rockwell Hanford Operations, Richland, Washington.

6-45. RHO-F-11, April 1980, B Plant Waste Handling and Concentration Flowsheet, L. L. Lin and R. D. Weissenfels, Rockwell Hanford Operations, Richland, Washington.

6-46. PFD-B-600-00002, June 1983, Chemical Sewer Flowsheet for B Plant Area, R. R. Rodriguez, Rockwell Hanford Operations, Richland, Washington.

6-47. SD-496-ER-001, March 1984, Chemical Sewer Upgrade, 221-B Project Scope Definition, J. H. Hummer, Rockwell Hanford Operations, Richland, Washington.

6-48. 496-FDC-001, April 1984, Functional Design Criteria Chemical Sewer Upgrade, 221-B Project B-496, FY-1986 General Plant, J. H. Hummer, Rockwell Hanford Operations, Richland, Washington.

6-49. RHO-MA-139, January 1978, Environmental Protection Manual, Rockwell Hanford Operations, Richland, Washington.

6-50. PFD-B-600-001, February 9, 1982, Cooling Water Flowsheet for B Plant and Encapsulation, R. D. Weissenfels, Rockwell Hanford Operations, Richland, Washington.

6-51. ARH-CD-971, May 27, 1977, B Plant and Encapsulation Cooling Water Conservation Methods, R. F. Carlstrom, Atlantic Richfield Hanford Company, Richland, Washington.

6-52. RHO-MA-221, March 1979, Accident Prevention Standards, Industrial Hygiene and Safety, Rockwell Hanford Operations, Richland, Washington.

6-53. WAPD-SC-545, September 1957, Hydrogen Flammability Data and Application to PWR Loss-of-Coolant Accident, Dr. Z. M. Shapiro and T. R. Moffette, Bettis Plant, Westinghouse Electric Corporation, Pittsburgh, Pennsylvania.

6-54. CC No. 60-14267, February 1961, Combustion, Flames and Explosions of Gases, by Lewis and Von Elbe, Academic Press, Inc., New York and London.

6-55. Vol. 31, No. 2, February 1960, The Journal of Chemical Physics, Chemistry Division, "Hydrogen Formation in the Radiation Chemistry of Water," H. A. Mahlman, Oak Ridge National Laboratory, Chemistry Division, Oak Ridge, Tennessee.

6-56. Vol. 69, No. X, January 15, 1957, The Journal of Chemical Physics, Communications to the Editor, "The Effect of Nitrate Ion on the Yield of Hydrogen from Water Radiolysis," R. G. Sowden, Atomic Energy Research Establishment, Harwell, DidCot, Berks, England.

6-57. ARH-2163, August 1, 1971, Radiolysis of Citric Acid Solution, Dense Edvalson, Atlantic Richfield Hanford Company, Richland, Washington.

6-58. Vol. 50, No. X, October 1962, The Canadian Journal of Chemical Engineering, "Effects of Water Vapor Content on the Inflammable Limits of Ammonia-Oxygen-Nitrogen Mixtures," DeCoursey, et al., University of Saskatchewan, Saskatoon, Saskatchewan, Canada.

6-59. Internal Letter, Unnumbered, May 24, 1974, "Hazard Review - Ammonia Safety," M. J. Klem and E. J. Kraft to L. M. Knights, Atlantic Richfield Hanford Company, Richland, Washington.

6-60. Internal Letter No. 65230-79-213, November 16, 1979, "B Plant Ammonia Handling," L. L. Lin to J. W. Gehrke, Rockwell Hanford Operations, Richland, Washington.

6-61. Bulletin 503, 1952, Limits of Flammability of Gases and Vapors, H. F. Coward and G. W. Jones, Bureau of Mines.

6-62. OSD-B-257-00041, Rev. B-0, Operating Specification for Waste Processing and Encapsulation, Rockwell Hanford Operations, Richland, Washington.

6-63. ARH-ST-104, August 1974, Final Report - Program for Fire Protection, Caves, Canyons and Hot Cells, Atlantic Richfield Hanford Company, Richland, Washington.

6-64. ARH-3020, July 1974, Guide to Fire Protection in Caves, Canyons and Hot Cells, H. A. Lee, Atlantic Richfield Hanford Company, Richland, Washington.

6-65. ARH-1323, July 16, 1969, B Plant Hazards Review, C. N. Malody et al., Atlantic Richfield Hanford Company, Richland, Washington.

6-66. BNWL-B-358, June 1974, Fractional Airborne Release of Strontium During the Combustion of 30 Percent Normal Tributyl Phosphate in a (NPH) Kerosene-Type Diluent, Battelle Pacific Northwest Laboratories, Richland, Washington.

6-67. ARH-1736, June 1, 1970, Nitration of B Plant Cesium Carbonate, H. L. Brandt, Atlantic Richfield Hanford Company, Richland, Washington.

6-68. RHO-MA-111, March 1983, "Emergency Plan B Plant/WESF Procedure," Rockwell Hanford Operations, Richland, Washington.

6-69. ARH-2921, October 31, 1973, Hazards Review - Fire Protection Improvements - 221-B Building - Project HCP-670, J. B. Fecht, et. al., Atlantic Richfield Hanford Company, Richland, Washington.

6-70. ARH-139, November 15, 1967, Hazards Evaluation, Waste Fractionization - B Plant (Project CAC-166), B Plant Modification for FDCE - Waste Management Integrated Facilities (Project CAC-181), and Promethium Purification - B Plant (Project AAE-207), R. B. Bixler et al., Atlantic Richfield Hanford Company, Richland, Washington.

6-71. BNWL-CC-1070, February 1967, A Survey of B Plant Waste for Explosion Hazards, J. F. Phillips, Battelle Northwest Laboratories, Richland, Washington.

6-72. SD-RE-PDG-001, March 30, 1982, Process Design Guides, Rockwell Hanford Operations, Richland, Washington.

6-73. PCR-B-140-00001, August 1982, B Plant Process Instrument Calibration List, Rockwell Hanford Operations, Richland, Washington.

6-74. RHO-PS-MA-1, March 10, 1983, Instrument Calibration Control Manual, G. R. Board, Rockwell Hanford Operations, Richland, Washington.

6-75. RHO-CD-861, November 1979, B Plant and WESF Sampling, L. L. Lin, Rockwell Hanford Operations, Richland, Washington.

6-76. Bulletin Z-50, 1970, Zeolon Acid Resistant Molecular Sieves, NORTON Chemical Process Products Division, Akron, Ohio.

6-77. LA-8841-MS, June 1981, Review of the Thermal Stability and Cation Exchange Properties of the Zeolite Minerals Clinoptilolite, Mordenite, and Analcime: Applications to Radioactive Waste Isolation in Silica Tuff, J. R. Smyth and F. A. Caporuscio, Los Alamos Scientific Laboratory, Los Alamos, New Mexico.

6-78. ARH-SA-49, January 1970, Laboratory Evaluation of Zeolitic Material for Removing Radioactive Cesium from Alkaline Waste Solutions, J. S. Buckingham, Atlantic Richfield Hanford Company, Richland, Washington.

6-79. Internal Letter 65610-84-154, September 19, 1984, "Heat Transfer Analysis of Tanks TK-7-1, TK-37-1, and Centrifuge G-12-1 of B Plant," from D. C. Riley to R. G. Sewell, Rockwell Hanford Operations, Richland, Washington.

6-80. RHO-MA-172, Radiation Work Permits, Rockwell Hanford Operations, Richland, Washington.

# 7.0 WASTE CONFINEMENT AND EFFLUENT MANAGEMENT

This chapter contains a discussion of the systems and controls for confining and managing the waste material generated as a byproduct of the B Plant fission product processing operations. Both radiological and nonradiological wastes in airborne, liquid, and solid forms are discussed.

## 7.1 AIRBORNE EFFLUENTS

Chapter 4.0 of this Safety Analysis Report (SAR) summarizes the principal design criteria applicable to radioactive byproduct and effluent management systems of B Plant (Chapter 4.0). Chapter 5.0 provides design details of the ventilation systems. This chapter discusses gaseous effluents associated with B Plant operations and assesses their compliance with applicable criteria. A summary of major airborne effluent release points is presented as Table 7-1, and Table 7-2 provides typical (1983) airborne effluent radioactivity data (Ref. 7-1).

### 7.1.1 221-B Canyon Ventilation Exhaust (291-B-1 Stack)

7.1.1.1 Overview. The main canyon and cells of the 221-B Building are exhausted via the 61 m (200 ft) 291-B-1 Stack to the atmosphere. Figure 7-1 shows the general movement of air through the system. This system removes process-generated heat and controls the path of the release of contaminated air from the canyon and the adjacent 212-B Cask Station (Section 7.1.7).

The filtered and washed supply air enters near the top of the canyon, flows downward around process cell cover blocks into the cells, and through openings into the canyon exhaust air tunnel. The offgases from certain process vessels which are collected by the No. 1 Vessel Ventilation System (VVS#1) (Section 7.1.2) are also discharged to the canyon exhaust air tunnel. Additionally, a 24-in.-dia. interconnection to this exhaust-air tunnel provides exhaust ventilation for 224-B Building process vessels which are no longer in service.

Exhaust air is triple, high-efficiency, particulate air (HEPA) filtered by the 291-B "D" Filter System (Ref. 7-2), continuously monitored, sampled, and discharged from the 291-B-1 Stack. Filter Systems "A," "B," and "C" were used prior to the "D" Filter System currently in service. Based on past emission records, the radionuclide concentrations in this effluent during normal operation are expected to be well below Table II guideline values (Ref. 7-3) at the point of release. Extensive system characterization and maintenance were performed during 1982-1983, and the radionuclide sampling and monitoring system for this stack presently are considered to meet all requirements. Under normal operating conditions, the nonradiological contamination impacting this system is negligible.

TABLE 7-1. Summary of Major B Plant Airborne Effluent Release Points.

| Stack designation | Stack height | Stack diameter | Location | Height of probe |
|---|---|---|---|---|
| 291-B-1 | 61 m (200 ft) | ~2 m (6.5 ft) | 291-B | 15.2 m (50 ft) |
| 296-B-5 | 5 m (16.4 ft) | 0.4 m (16 in.) | 221-BB | 3.0 m (10 ft) |
| 296-B-13 | 4 m (13.1 ft) | 15.2 cm (6 in.) | 221-BF | 3.0 m (10 ft) |
| 296-B-14 | -4 m (-13.1 ft)* | 15.2 cm (6 in.) | 221-B, Sect. 10 | At junction of vent line and cooling water line |
| 296-B-21 to B-27 | ~2 m (~6.6 ft) | 0.6 x 0.9 m (2 ft x 3 ft) | North side 221-B | No probes |

*Discharged into 24-in. cooling line below grade.

TABLE 7-2. Typical B Plant Airborne Radioactive Effluent Discharge Data.

| Stack designation | Effluents | Annual average concentration (μCi/mL) | Total activity released (Ci) |
|---|---|---|---|
| 291-B-1 | Total alpha | <7 E-15 | <4 E-06 |
| | Total beta | 4 E-11 | 2 E-02 |
| | $^{89,90}Sr$ | 3 E-12 | 2 E-03 |
| | $^{137}Cs$ | 5 E-11 | 3 E-02 |
| 296-B-5 | Total alpha | <4 E-15 | <8 E-08 |
| | Total beta | <3 E-14 | <6 E-07 |
| 296-B-13 | Total alpha | <4 E-15 | <3 E-08 |
| | Total beta | <2 E-14 | <2 E-07 |
| 296-B-14 | Total alpha | <8 E-15 | <3 E-08 |
| | Total beta | 3 E-12 | 1 E-05 |

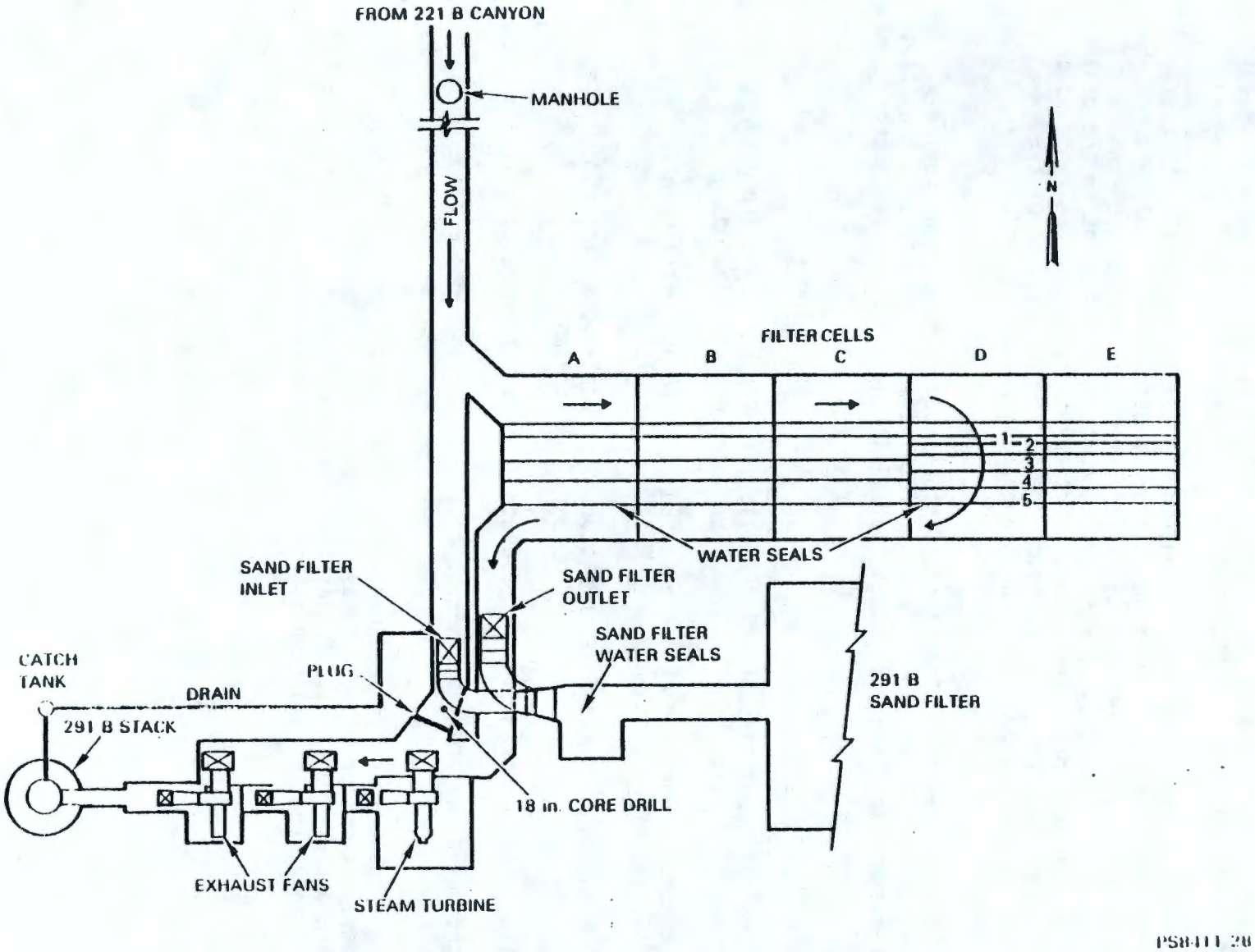


FIGURE 7-1. Canyon Exhaust Ventilation System.

An emergency steam-turbine-driven exhaust blower is available for the canyon ventilation system. An exhaust air sand filter paralleling the "D" HEPA Filter System is maintained in standby status, isolated from the HEPA system by water seals. Additional details of this system are presented in Chapter 5.0 and in the subsections which follow.

7.1.1.2 Source Term. The canyon and process cells are normally contaminated as a result of past and ongoing process operations. Equipment failure, leakage of process solutions, and remote maintenance operations contribute to the quantity of radioactive contaminants present in the canyon and cells. These contaminants are subject to dispersion in the ventilation air. The ventilation systems function to confine the release of these contaminants, thereby protecting both operating personnel and the environment.

Megacurie inventories of mixed fission products have been routinely processed through 221-B and its support facilities in the past. A qualitative assessment of these activities (Ref. 7-4) characterized the source terms as follows:

| Source | Location |
|---|---|
| Kilocurie quantities of mixed fission products in waste | Process cells and gaseous effluent filters |
| Megacurie quantities of concentrated $^{137}Cs$ and $^{90}Sr$ solutions | Storage vessels in process cells |
| Microcuries of mixed fission products | Waste water and condensate streams |
| Kilocuries of mixed fission products | Cask transfer facility |
| Hundreds of kilocuries of $^{137}Cs$ and $^{90}Sr$ | Canyon ventilation exhaust filters |

The actual extent of resuspension of radioactivity in ventilation air is a complex function of surface area, temperature differential, vapor pressure, and other parameters. Therefore, no attempt has been made to quantitatively model the introduction of radionuclides into the ventilation systems.

7.1.1.3 Filter System. The filter system for the main canyon and cell ventilation is described in Section 5.2. The fourth or "D" filter bank currently in use consists of a fire screen, two stages of 85% prefilters (currently not used), and three stages of HEPA filters, all in series. The HEPA stages are arranged in three tiers (2 x 5 on top of 3 x 5 on top of 3 x 5) and two stages, for a face total of 80 HEPAs (80,000 cfm capacity of full rated flow of filters).

The system has automatic sprinklers for fire protection. The two prefilter stages and the first HEPA filter stage incorporate a design feature which permits lowering the upper one quarter of the bank so that it may be individually bypassed and removed from service. Such bypassing may be warranted by the filter bank differential pressure or other operating parameters, such as the removal of the "D" system prefilter from service in May 1982 (Ref. 7-2).

The various stages of the three-stage HEPA system are not designed to allow individual dioctyl pthalate (DOP) testing of stages. The system is DOP tested as a unit at least quarterly, or more frequently if needed. The individual stages are provided with differential pressure gauges. This instrumentation is described in detail in Chapter 5.0, Section 5.2.3.

The sand filter is maintained available for use as an emergency backup to the "D" filter. Air flow transition to the sand filter is initiated whenever the fire detection system is activated by smoke or heat. When detection occurs, airflow is diverted from the HEPA filter to the sand filter by draining the water from the sand filter seals to the HEPA filter outlet seals; the sand filter is then employed exclusively. The sand filter design flow is 25,000 cfm, so flow must be reduced and processing activities curtailed whenever the sand filter is used. The design pressure drop of the sand filter is 7.0 in. wg (Ref. 7-5).

A fifth filter cell, the "E" filter system has been constructed as a future replacement of the filters currently in use. Its design is similar to the "D" filter in that the first three filter banks can be bypassed to extend the overall life. As in the "D" filter, individual stages of the "E" filter are not individually DOP testable. The "D" and "E" filter banks cannot be modified to permit individual DOP testing of each stage. A preliminary review has been completed of design changes which might be incorporated in a sixth ("F") canyon filter (Ref. 7-2). The conceptual design of this filter is now underway.

The "D" filter provides particulate decontamination of the 221-B Ventilation System under normal operating conditions. This filter configuration can be expected to achieve a decontamination factor (DF) of

8 E+09 under normal operating conditions and approximately 1.25 E+08 for the accident condition, based on the conservative assumptions recommended for nontestable stages (Ref. 7-5). A recent DOP test of the "D" filter indicated an efficiency of 99.995% which equates to a DF of 2 E+04 for approximately 0.3 µm particles. The Environmental Protection Manual (RHO-MA-139) (Ref. 7-3), requires that the testable stage of each HEPA filter (or equivalent) system "remove at least 99.95% of DOP particles or equivalent ranging in size from 0.1 to 3.0 µm with a median particle size of 0.7 µm. The sand filter efficiency was recently determined (July 1983) by DOP test to be 99.958% at design flow which equates to a DF of 2.38 E+03.

It should be noted in the foregoing discussion that no removal of gaseous forms is achieved by this particulate removal treatment system.

7.1.1.4 Sampling and Monitoring System. The sampling and monitoring system for the 291-B-1 Stack effluent was upgraded under Project B-432 to incorporate design improvement and state-of-the-art instrumentation.

The system is based on a design which was recently developed for site-wide application to airborne effluents associated with 200 Area facilities. The description which follows is summarized from Reference 7-6:

> A flow rate sensing element installed in the main stack airstream measures the air flow with an accuracy of plus or minus 10% of span. An electrical signal, proportional to the stack flow, is transmitted to the 271-B Building Dispatcher's Office. The flow-rate sensing elements and indicators are sized to handle main stack flow rates ranging from 25,000 cfm to 75,000 cfm. There is a penetration of the stack at approximately 50 ft in elevation, which is used to position the sensing probes.

Two separate isokinetic air extraction probes are installed to withdraw representative air samples from the main stack airstream. The record sampling system will operate continuously whenever, and only if, air is being exhausted from the stack. The CAM system however, will operate continuously under all circumstances. The Rockwell generic system has a switch receptacle which is linked to the exhaust fan operations, and a flow switch is provided to disrupt power to the receptacle when stack air flow stops and to restore power when flow is detected.

Sample probes have been designed for multi-nozzle isokinetic sample extraction per ANSI N 13.1 (Ref. 7-7). The design was based on the average stack velocity. This average value was determined from velocity profile measurements taken at or near the plane of sample extraction. These measurements were obtained in a Pacific Northwest Laboratory (PNL) study conducted in 1976 (Ref. 7-8).

One probe is dedicated to extract an air sample that is passed through a record filter at a minimum flow rate of 2.0 ± 0.2 cfm. Air flow rates through the record filter are sensed, regulated, indicated, and totalized in the 292-B Instrument Building. A low sample air flow rate will

activate an alarm switch that initiates local and remote alarm indicators. Remote alarms and indicators are located in the 271-B Building Dispatcher's Office.

The second probe draws a sample through a flow splitter. One side of the flow splitter is ported to a backup record filter. The other side of the flow splitter is ported to a beta/gamma CAM. The air flow through the backup record filter is regulated and has a local flow-rate-indicating device. The CAM has similar regulating and indicating devices.

Local low sample-flow-rate alarms are provided by the Rockwell generic sample system. Alarms resulting from a CAM malfunction or low-sample flow rate annunciate separately at the local level; but they are combined into one general alarm at the remote alarm panel in the Dispatcher's office. The Rockwell generic sample system provides local alarms for high airborne radioactivity and system failure, and this system also provides a high temperature alarm for CAM circuit protection.

Improved reliability is provided by a backup record sample, stack-flow-to-sample-flow interlocks, and improved alarm capabilities. Alarm signals are routed to the Dispatcher's Office in 271-B, which is continually occupied as a central B Plant processing control center.

7.1.1.5 Administrative and Operational Controls. The canyon and cell ventilation, air filtration, and sampling/monitoring systems are routinely surveyed for operability and indication of impending failure, malfunction, etc. This surveillance is documented by Standard Operating Procedures, Health Physics Procedures, and a variety of other administrative systems. Table 7-3 summarizes the various routine surveillance functions. In addition to such routine checks, air balancing, DOP testing, and instrument maintenance/calibration services are available on an as-needed basis. Spare parts critical to safety system operation are identified by Maintenance Engineering, and stocked for ready availability. The automated reporting system for laboratory analyses of the 291-B-1 Stack CAM and record samples includes capability for graphic trend indication. This capability provides recognition of system deterioration which could result in increased released concentrations. Quarterly measurement of stack flows is part of the input to total release inventory calculations calculated from record sample analyses.

7.1.1.6 Additional Release Controls. The "D" Filter exhaust plenum is equipped with a CAM which provides an additional method to evaluate filter performance in the event of an upset indicated by the stack CAM or record sample. The sampler consists of three vertical probes each having seven 1/8-in.-dia. Schedule-80, stainless-steel nozzles. The three probes are spaced at equal distances across the rectangular plenum and are routed via a short transport line to the CAM inside Building 291-BF. The system is not isokinetic, but the multiple nozzles (21 total) are considered sufficient to adequately cover the entire duct cross section, because the flow at this location could be stratified.

TABLE 7-3. Routine Surveillance of 291-B-1 Effluent Systems.

| Surveillance parameter | Frequency* |
|---|---|
| Check of CAM local ratemeter | Each shift |
| Change and analysis of CAM filter | Daily |
| Change of record sample filter | Weekly |
| Record sample composite analysis | Monthly |
| Calibration of CAM | Annually and as needed |
| Calibration of rotameters | Semiannually and as needed |
| DOP test + stack flow measurement | Quarterly and as needed |
| Filter d/p surveillance | Daily |
| Water seal level surveillance | Daily |
| Fan operability/lubrication | Daily |
| Steam availability/pressure | Daily |

*The frequencies indicated are those required for compliance to operations procedures. Many of these checks and calibrations are actually done more frequently.

Additionally, the three CAMs which monitor ambient air concentrations in the canyon will provide indication of any major increase in the source term to the stack effluent. These units are similar to the stack exhaust CAM previously described and are installed primarily for personnel protection within the facility (see Chapter 8.0).

7.1.1.7 Nonradiological Emissions. High efficiency particulate air filtration reduces the concern about emission of particulates, asbestos, and the accompanying visual opacities of the effluent. The plant has no sources of beryllium, sulfur dioxide, carbonyls, vinyl chloride, or mercury. Sources of nitrogen oxides and ammonia constitute the only two nonradiological emissions of concern.

The source of nitrogen oxides is nitric acid used in the separations process. Most of the vessels containing this source are part of the VVS#1 (see Section 7.1.2). Nitrogen oxides emission concentration is estimated to be less than 5 ppm (Chapter 5.0).

Ammonia as ammonium carbonate-ammonium hydroxide is used in the $^{137}Cs$ ion exchange recovery process in the plant. The vessels containing ammonia-bearing solutions are exhausted by the Vessel Ventilation System No. 2 (VVS#2) (see Section 7.1.2). Some small amounts of ammonia find their way to the 291-B effluent because of cross ties between tanks served by the VVS#1 and VVS#2 systems. The inclusion of an ammonia scrubber in the system assures that no appreciable release of ammonia occurs from the VVS#2 system.

The 291-B-1 system does not incorporate any monitoring or sampling specifically to measure nonradiological pollutants.

7.1.1.8 System Compliance. Airborne emissions from Rockwell operated facilities are subject to a variety of DOE, EPA, and State and locally imposed regulations. These regulations are summarized in RHO-MA-139 (Ref. 7-3). The 291-B-1 effluent systems are operated in compliance with the requirements of this manual. Identified inadequacies in effluent radionuclide concentration measurements are addressed by sampling and monitoring system upgrades. A DOP test recommendation or guideline that "each (HEPA) filter stage should be tested individually" cannot be achieved in the current "D" Filter or in the already built "E" Filter. This condition is mitigated by increased frequency of DOP testing of the overall system (quarterly performance versus minimum requirement). In addition, the preliminary evaluation of alternatives for sixth or "F" Filter design (Ref. 7-4) have proposed incorporation of a recently developed DOP dispersal system (Ref. 7-9) to achieve this capability in future 291-B-1 filters.

Industry standards, adopted as Rockwell requirements, recommend that ventilation zones be established and that "the pressure difference between an isolation zone and any adjacent zones must be at least 0.5-in. wg. (Ref. 7-10, 7-11, and 7-12). The canyon to atmosphere differential pressure (dp) is usually -0.24 to -0.30 in. wg. Entries into the canyon will be restricted if the dp increases above this range. These dps are a complex function of supply and exhaust fan capabilities and performance curves, as well as the filter dps, and are interrelated with the other ventilation system within the facility. In the course of past CAW campaigns and current operations, the existing system has maintained releases within applicable concentration standards (as listed in RHO-MA-139) under routine conditions. System and procedures are in place to respond to abnormal concentration increases and accident conditions. For example, the emergency procedure for response to a 291-B stack alarm covers such items as:

- Response to a high-radiation alarm
- Procedures to follow if an effluent sample indicates excessive radioactivity
- Procedures to follow for failure in monitoring systems.

These procedures, and others which address similar incidents, are reviewed and modified as experience dictates.

### 7.1.2 Process Vessel Ventilation Systems

7.1.2.1 Overview. B Plant has two vessel ventilation systems identified simply as No. 1 and No. 2 (Fig. 7-2 and 7-3). The VVS#1 vents and filters gases from process vessels which do not contain ammonia. The system includes a heater, prefilter, HEPA, and condenser. The treated air is directed into the ventilation tunnel where it is further filtered, sampled, monitored, and released as part of the canyon ventilation system (see Section 7.1.1).

The VVS#2 vents and filters gases from vessels in which ammonia is potentially present. The gases are collected through header 146 to Cell 22 where they progress through an ammonia scrubber, a heater to reduce the relative humidity of the vapor stream, a glass-fiber prefilter, and a redundant bank of two stage HEPAs. Then the air flows to an outside filter pit on the south side of 221-B. The pit contains a redundant bank of two stage HEPAs and a steam jet which provides the motive force for the stream. These redundant filters are provided as an immediately available alternate system. The air is continuously monitored from a tie-in near the outlet of these filters and finally discharges into the 24-in.-dia. cooling-water header. Risers and manholes along this header allow release of this airborne effluent to the atmosphere.

7.1.2.2 Source Term. The vessel ventilation systems maintain the radioactive process-solution-containing vessels at a pressure negative to their surroundings. Typical fission product concentration which is for CAW (ZAW) feed solutions to the B Plant process are shown in Table 7-4.

As a result of the nature of the B Plant mission, the concentrations of the "product" radionuclides, cesium and strontium, may be greatly increased in specific vessels within the facility. Strontium-90 concentration for example may range from 1,160 to 2,300 Ci/L (4,400 to 8,700 Ci/gal) in Tank 36-3 following final purification by the caustic strike process (Ref. 7-13).

The degree to which these radionuclides may be introduced to ventilation air at air-liquid interfaces is not readily quantified although it is known to be low. As noted in Section 7.1.1.2, the extent of resuspension or entrainment depends on a number of factors including surface area of interface, vapor pressure, temperature, etc. Among the most significant of the factors are variations in solution chemistry and temperature necessary to the various processing steps. Details on these process impacts on potential ventilation source term and discussion of related safety limits are included in Chapters 9.0 and 11.0.

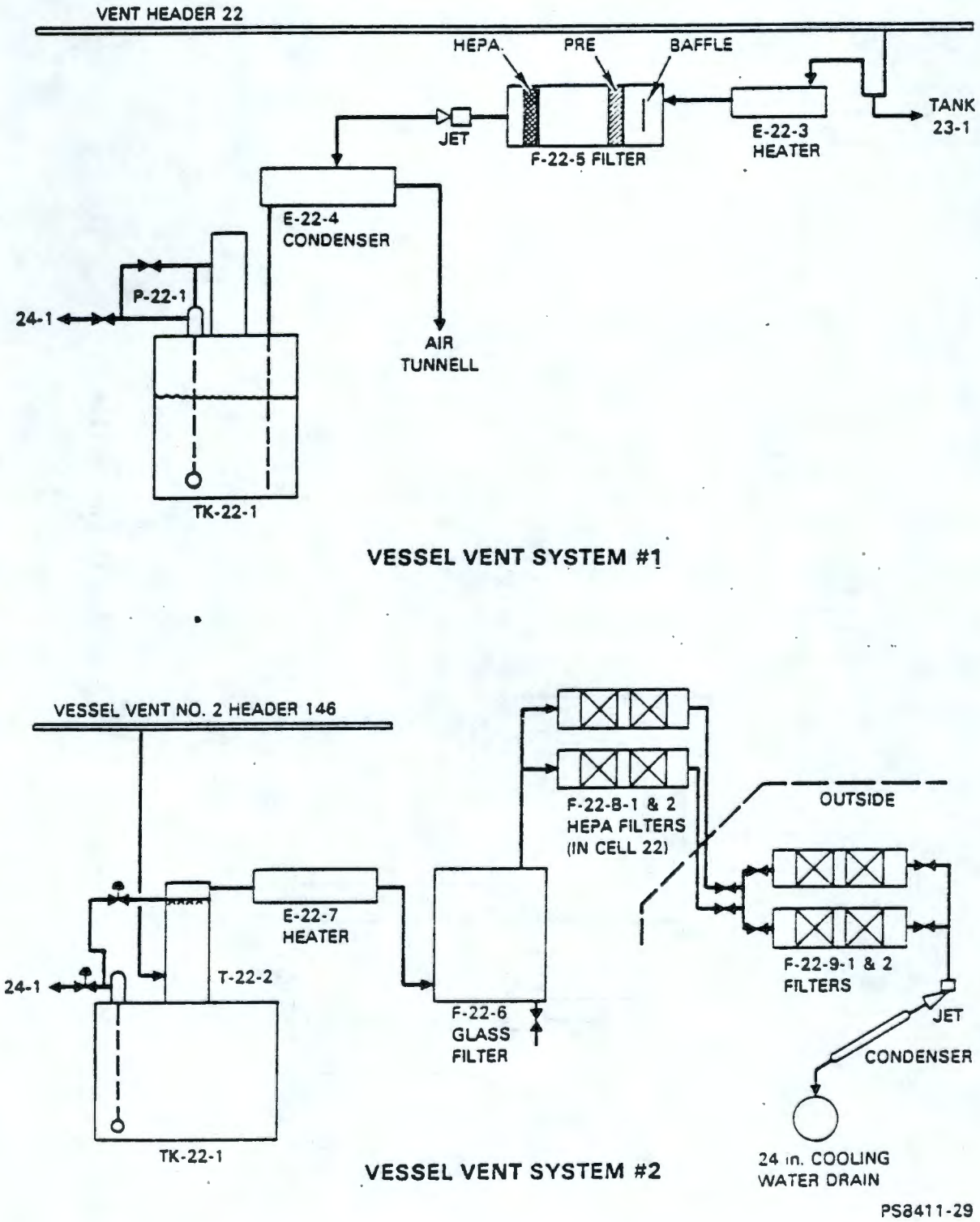


FIGURE 7-2. Instrumentation and Control for Vessel Vent No. 1.

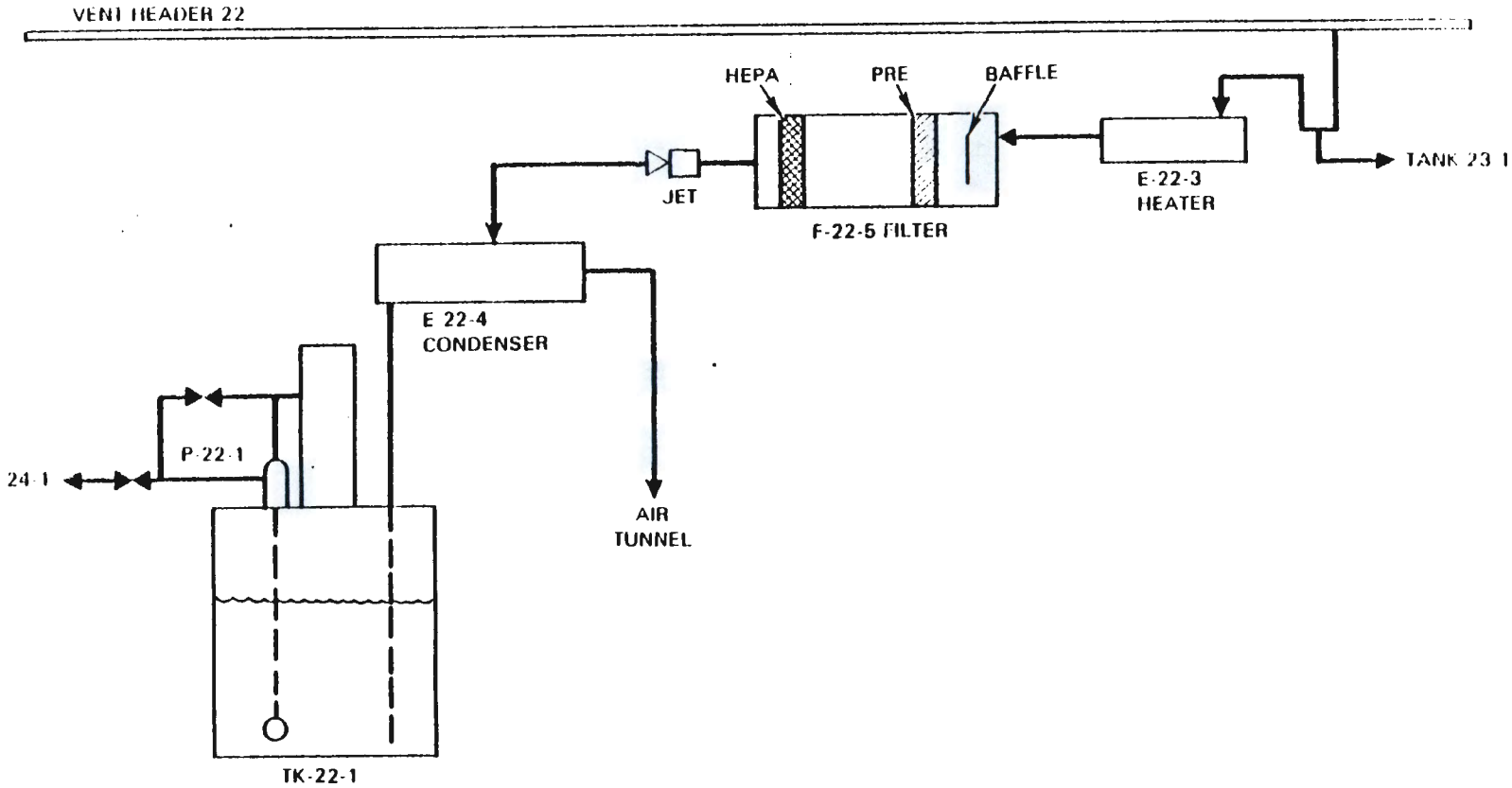


PSB411 30

FIGURE 7-3. Vessel Ventilation System #1.

TABLE 7-4. Fission Product Concentrations in PUREX Zirflex Acid Waste (Ref. 7-13).

| Isotope | Ci/L |
|---|---|
| $^{89}Sr$ | 107 |
| $^{90}Sr$ | 20 |
| $^{90}Y$ | 20 |
| $^{91}Y$ | 170 |
| $^{95}Zr$ | 236 |
| $^{95}Nb$ | 472 |
| $^{103}Ru$ | 51 |
| $^{103m}Rh$ | 51 |
| $^{106}Ru$ | 68 |
| $^{106}Rh$ | 68 |
| $^{134}Cs$ | 4 |
| $^{137}Cs$ | 22 |
| $^{137m}Ba$ | 21 |
| $^{141}Ce$ | 38 |
| $^{144}Ce$ | 380 |
| $^{144}Pr$ | 380 |
| $^{147}Pm$ | 73 |

7.1.2.3 Treatment System

VVS#1. The VVS#1 has been described in Section 5.3.2. Process vessels not containing significant quantities of ammonium compounds are vented to a header in Cell 22 (Fig. 7-2). Flow is through steam heater (E-22-3), one pre-filter and one HEPA filter in series (F-22-5-1 and F-22-5-2), a 1,200 cfm steam jet (J-22-4) and a condenser (E-22-4). After treatment by the components, the VVS#1 air is exhausted to the 221-B air tunnel where it is subject to the entire treatment of the main cell and canyon ventilation (Section 7.1.1.3). The steam heater is operated to minimize water damage to the HEPA filters. The HEPA removes particulates from the air stream prior to its mixing with the canyon exhaust air. The condenser is intended to minimize vapor introduction to the air tunnel since there are no moisture-separating components downstream to protect the 291-B filters.

The HEPA filtration system within Cell 22 is not designed to allow periodic DOP testing of either of the individual stages of the F-22-5 bank. This unit was tested following construction and prior to cell installation, and has been monitored primarily on the basis of filter bank differential pressures thereafter. These pressures are instrumented for remote readout in the Operating Gallery at Panel 22 where they are read each shift by Operations personnel and submitted for Process Control engineering evaluation. Separate pressure readings are provided for the two HEPA filters in series. Operating parameters of the steam heater are similarly monitored to minimize moisture damage to the filters. The F-22-5 filter configuration can be expected to achieve a decontamination factor (DF) of 4 E+06 under routine operation and 2.5 E+05 under accident conditions, based on the conservative assumptions recommended for nontestable stages by Reference 7-5. Thus, in combination with the HEPA filters encountered downstream in the 291-B-1 system, for every curie introduced to the VVS#1 airstream, approximately 3 E-17 curies might be exhausted by the 291-B-1 Stack.

VVS#2. The VVS#2 has been described in Section 5.3.2. Process vessels that contain (or have the potential to contain) significant quantities of ammonium compounds are vented to a scrubber (T-22-2) via Header 146. Figure 7-3 shows a schematic of the VVS#2 components. Offgas from the ammonia scrubber is routed to a steam heater (E-22-7), a glass fiber prefilter (F-22-6), and two HEPA filters in series. The HEPA filter components are parallel redundant (either F-22-8-1 or F-22-8-2 may be valved in service to provide two stage HEPA filtration). All of these components are located in Cell 22 within 221-B. From Cell 22 VVS#2 offgas is routed to a second two stage HEPA filter located (with its identical parallel redundant backup) in a filter pit adjoining the south side of the 221-B Building. The discharge point for this vent system is into the 24-in.-dia. cooling-water discharge header.

The DF of the prefilter is not known. It is typically operated at a higher differential pressure than that to which a HEPA should be subjected. As in the case of VVS#1 neither the glass fiber prefilter or either of the F-22-8 HEPAs is accessible for in-service DOP testing. Performance monitoring of these components is based on differential pressures recorded at the Cell 22 panel in the Operating Gallery. The F-22-9 filters in the outdoor filter pit are designed for remote replacement capability and are routinely DOP tested separately (individual banks can be tested). The cumulative DF of the F-22-8 and F-22-9 components for airborne particulates can be estimated as 1.6 E+13 and 6.25 E+10 under routine and accident conditions respectively using Reference 7-5 assumptions.

7.1.2.4 Sampling and Monitoring System. The VVS#1 offgas becomes part of the 291-B-1 effluent, and its sampling/monitoring system has been described in Section 7.1.1.4. The VVS#2 offgas is sampled near its point of release to the cooling water sewer between F-22-9 filters and the J-22-9 steam jet. No stack is provided. The airborne effluent is designated as 296-B-14. The sample removal is via a "T" fitting in the vent header. There is no sample probe or attempt at isokinetic sampling. The sample flow is routed to a Hanford design air monitor. The motive force for the sample vaccum is an independent steam jet. There is a record sampler. The CAM filter is changed and analyzed daily. The CAM is served by an emergency power supply.

The normal sample flow rate to the air monitor is 2 cfm through approximately 6 ft of stainless steel transport line which has a 4 ft vertical rise and several 90° bends. Transport efficiency for particles larger than 5 μm is less than 57%. This system has been identified for upgrade and various recommendations made (Ref. 7-14).

7.1.2.5 Administrative and Operational Controls. Standard Operating Procedures require that the various operating parameters of the vessel ventilation systems be read and recorded each shift by Operations. These readings are then reviewed by both Operations Management and Process Control Engineering. Established critical parameters, such as differential pressures across filters and off-gas heater temperatures, are continuously recorded on strip chart recorders. All instrumentation is subject to required calibration and maintenance schedules. F-22-9 filters are DOP tested annually, at a minimum, and at a higher frequency when indicated by replacement or by system anomaly. An area radiation monitor in the F-22-9 filter pit is connected to remote readout in the 271-B Dispatcher's Office which is continuously manned. The gamma sensitive detector is intended to assist in early recognition of any major VVS#2 upset such as F-22-8 filter breakthrough.

7.1.2.6 Additional Release Controls. TK-23-1 is vented by the ammonia bearing VVS#2 but also serves as the condensate receiver tank for VVS#1. A heel of at least 10-in. (125-gal) is maintained in this tank by sizing the dip leg length of the jet. This configuration prevents a direct connection between the two vessel ventilation systems.

The E-22-4 is similarly controlled, since its condensate drains to TK-22-1 on VVS#2 while gaseous effluent from VVS#1 passes through it. Other less permanent cross-ties are controlled in like manner. For example, jet legs or drains in TK-9-1, TK-11-1, TK-13-1, TK-14-1, TK-22-1, TK-23-1, TK-25-1, TK-25-2, TK-26-1, TK-26-2, TK-29-2, and TK-29-3 interconnect (cross tie) both VVS#1 and VVS#2, thus requiring 5 to 10 in. heels in the respective tanks.

The liquid effluent sampling and monitoring capabilities on the 24-in. dia. cooling water sewer are downstream of the VVS#2 discharge. They are not considered a highly reliable backup to the 296-B-14 CAM because of the very high volume (dilution) of the cooling water stream, and the consequent reduction in sensitivity as compared with the radioactivity detection by the CAM. The minimum detection level of the system is in the Table I range.

Shutdown of the VVS#2 discharge is readily accomplished in the event of a failure in the treatment system. (VVS#2 is required to support continued processing but removing it from service does not cause an immediate hazard to personnel or equipment.) The 291-B-1 filtration systems provide a backup in the event of treatment system failure in VVS#1.

7.1.2.7 Nonradiological Emissions. The RHO-MA-139 (Ref. 7-3), does not specify ammonia emission limits; however, emissions are minimized by use of several design features. The VVS#2 ammonia scrubber, the scrubbing action of the J-22-9 stream jet, and discharge into the cooling water effluent represent design intent to minimize ammonia emissions.

The VVS#2 has been sampled for ammonia concentration, with measurements being in the 1,000 ppm range. The threshold limit value (TLV) (Ref. 7-15) for ammonia is 25 ppm with a short-term exposure limit of 35 ppm. The VVS#2 discharge, however, is not in close proximity, to any regularly occupied work areas, and exceeding the personnel hazard limits is of minor concern. Environmental detriment associated with this airborne discharge is negligible.

7.1.2.8 System Compliance. The completed upgrades to 291-B-1 sampling and monitoring instrumentation have brought VVS#1 into full compliance. The VVS#2 does not comply with representative sampling requirements of RHO-MA-139 (Ref. 7-3) nor is the sampling and monitoring design up to the level of current industry standards such as ANSI N13.1 or ANSI N13.10. The vacuum capacity of VVS#2 is not always sufficient to maintain a negative pressure on all the vessels it services, allowing occasional escape of ammonia gases to the canyon. In-service DOP testing is not practical for the Cell 22 filters, but the accessible F-22-9 filters can be tested as a single stage since the two HEPA stages are separately installed.

7.1.3 221-B Gallery Exhaust System

7.1.3.1 Overview. The operating, pipe, and electrical galleries are ventilated by supply and exhaust fans. Exhaust air is discharged to the atmosphere through prefilters and single-stage HEPA filters, located at seven fan stations designated 296-B-21 through 296-B-27. Total capacity of the seven exhaust systems is approximately 160,000 cfm although all exhausters are not continuously operated. The exhaust points are not sampled or monitored. Ambient air in the galleries is routinely sampled and monitored at multiple points (see Chapter 8.0).

7.1.3.2 Source Term. Interfaces with process vessels and equipment in the canyon cells make the galleries subject to potential contamination via equipment failure, as well as blow-back or "suck-back" from process related pressure transients. However, during routine operations the contamination levels in these areas are minimal. Some areas of fixed contamination exist as a result of previous upsets, but these can not provide a source term for contaminating the ventilation air.

7.1.3.3 Treatment System. Each of the seven exhausters serves one or two vertical stages of prefilters arranged in a 3 x 3 array. The prefilters are in series with HEPA filters, accessible from the pipe or electrical gallery. The HEPAs are DOP tested following installation and at least annually thereafter. A DF of at least 2 E+03 would be expected under all conditions of normal operation of these systems (Ref. 7-5). Theoretical DF would equal or exceed 3,333 and available DOP filter efficiency data confirms this figure.

7.1.3.4 Sampling and Monitoring System. The seven exhaust points described above have no sampling or monitoring instrumentation. Procedures are in place to initiate high-volume air sampling at the exhaust point closest to the gas air sampling at the exhaust point gallery area affected in the event

of a contamination upset in the galleries. The network of samplers and monitors tracking ambient air concentrations within the galleries (prior to filtration and release to the environment) is discussed in Chapter 8.0.

7.1.3.5 Administrative and Operational Controls. As noted, the HEPA filters are DOP tested annually. Filter differential pressures are read and recorded weekly. Constant-air-monitor units serving the galleries are remotely alarmed in the Dispatcher's Office. Contamination surveys of the galleries are performed routinely by Radiation Monitoring personnel.

7.1.3.6 Additional Release Controls. If warranted by upset conditions, the flow through gallery exhaust points 296-B-21 through 296-B-27 can be reduced and air flows routed through the crane cab access doorways to the canyon (291-B-1 vent system). This is done procedurally with SOP administrative controls. Environmental release concentrations can be approximated from measured gallery concentrations using a conservative DF assumption for the filtered release, as suggested in Reference 7-5.

7.1.3.7 Nonradiological Emissions. Since these seven systems exhaust areas routinely occupied by operational personnel, the nonradiological hazards of the areas are generally more limiting than environmental concerns. Occasional maintenance work on asbestos lagging occurs in the galleries. Any environmental release of this asbestos is mitigated by the HEPA filtration.

7.1.3.8 System Compliance. There is a low probability of source term introduction into the 271-B Exhaust System. Also, the effluent treatment system is adequate, and emergency procedures are in place. Because of these factors, S&QA considers that the 271-B Exhaust System meets the intent of DOE 5484.1 (Ref. 7-16) requirements for effluent monitoring. A deviation is active to address compliance with specific sampling requirements of RHO-MA-139 (Ref. 7-3).

### 7.1.4 221-BB Exhaust System

7.1.4.1 Overview. The 221-BB liquid effluent support building is exhausted by a 2,000 cfm capacity, single-stage HEPA filtration system via the 296-B-5 Stack. The effluent is continuously monitored and sampled by a generic system (Fig. 7-4) (Ref. 7-17). An evaporative cooler provides supply air. Chapter 5.0 provides facility design details on this ventilation system.

7.1.4.2 Source Term. The 221-BB Building contains weir tanks and effluent instrumentation for the process condensate and steam condensate liquid effluents (see Chapter 5.0). The weir tank vault is contaminated from past upsets of these effluent streams. Entry to the portion of the building containing this vault normally requires respiratory protection as a result of the following:

- Residual contamination from previous upsets of effluent streams
- Potential for liquid effluent upset during building occupancy (weir tanks not negative relative to building atmosphere)

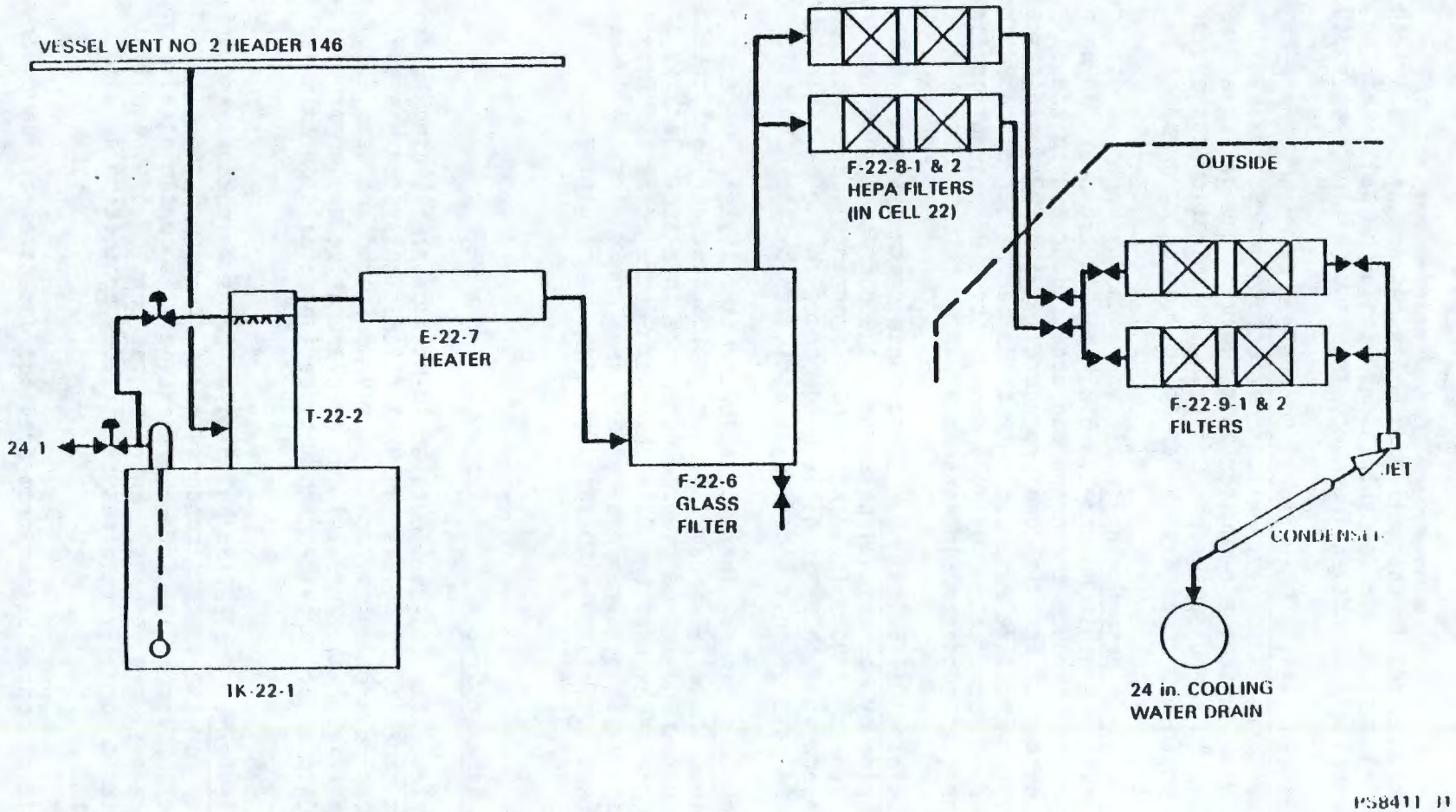


FIGURE 7-4. Vessel Ventilation System #2.

- Increased entrainment potential because of relatively high temperatures of liquid effluents.

The source term is very low relative to the canyon and vessel ventilation systems previously described and similar in risk to the gallery exhausts, except that smearable contamination is known to be present in 221-BB. Startup of PAW processing is not expected to appreciably change the source term from the current conditions. Continuous air monitor units have recently been installed to monitor the air within the condensate tanks room, and the air within the monitor rooms, as part of planned upgrades.

7.1.4.3 Treatment System. The 296-B-5 exhaust is subject to treatment by a single stage of 80% prefiltration in series with a single stage of HEPA filtration. Each stage is arranged in a one high by two wide (2,000 cfm capacity) array. The HEPAs are DOP tested following installation and at least annually thereafter. A DF of at least 2 E+03 is all that can be claimed under all conditions of normal operation of this system per Reference 7-5. Theoretical DF would equal or exceed 3,333 and available DOP filter efficiency data confirms this figure. There is no system dedicated to moisture removal, and there are no indications that one is needed. System air flow is controlled by adjustment of an opposed multi-blade damper.

7.1.4.4 Sampling and Monitoring System. The 296-B-5 stack effluent is equipped with a generic sampling and monitoring system (Ref. 7-18). This system includes a probe for isokinetic withdrawal, a short transport line with smooth, large-radius bends, a record sampler, and a beta-gamma CAM. Local alarm signals on low record or CAM sample flow, high radiation, or CAM failure, and a flashing light indicates high or low cabinet temperature to indicate heater malfunction. Local alarms are ganged for remote annunciation in the Dispatcher's Office, 271-B.

7.1.4.5 Administrative and Operational Controls. The 296-B-5/221-BB Ventilation System is routinely checked for operability and any indications of impending failure, malfunction, etc. This surveillance is documented by Standard Operating Procedures, and a variety of other administrative systems. Table 7-5 summarizes the various routine surveillance functions. In addition to such routine checks, air balancing, DOP testing, and instrument maintenance/calibration services are available on an as-needed basis. Spare parts critical to safety system operations, such as HEPA filters, are identified and stocked for ready availability.

7.1.4.6 Additional Release Controls. A previously installed record sampling system remains in place as a backup in the event of failure of the currently used system. Since the 221-BB Facility is not routinely occupied, shutdown of 296-B-5 could be accomplished (in the event of unacceptable release concentrations) without immediate hazard to operation personnel.

Similarly, the BCS and BCP streams can be secured by shutdown of the E-23-3 Concentrator if 296-B-5 release levels lead to suspicion of the 221-BB source term. These streams are described in Sections 7.2.2 and 7.2.3.

TABLE 7-5. Routine Surveillance of 296-B-5 Effluent Systems.

| Surveillance parameter | Frequency |
|---|---|
| Change of CAM filter and analysis | Weekly |
| Change of record sample filter | Weekly |
| Record sample composite analysis | Monthly |
| CAM calibration | Annually and as needed |
| Rotameter calibration | Semiannually and as needed |
| DOP test and stack flow measurement | Quarterly and as needed |
| Filter d/p surveillance | Daily |
| Fan operability/lubrication | Daily |

7.1.4.7 Nonradiological Emissions. Although the BCP liquid effluent is known to have a relatively high ammonia concentration, it does not appear to contribute significantly to the 296-B-5 air. No other source of concern relative to nonradiological pollutants has been observed in the analyses of these emissions (Ref. 7-23).

7.1.4.8 System Compliance. This system is in compliance with applicable DOE and Rockwell effluent regulations (Ref. 7-3). If a potential for high-level, accidental airborne release existed, there would be concern in regard to stack height and building wake effects in proximity to 221-B and 221-BC Buildings. However, the risk of appreciable airborne release is mitigated largely by administrative controls imposed on BCS and BCP effluents.

### 7.1.5 221-BC Exhaust System

Although this annex to the 221-B Canyon Building is served by an independent ventilation supply system, its exhaust is to the canyon, and it becomes part of the 291-B-1 effluent. Section 7.1.1 detailed the characteristics of this airborne discharge to the environment. Small scale decontamination activities are conducted in one portion of the 221-BC Facility. Chemicals associated with the efforts have a negligible environmental hazard because of the small volumes of material and the large volume of dilution air.

### 7.1.6 221-BF Exhaust System

7.1.6.1 Overview. The 221-BF Building, which houses BCP batch collection tanks for B Plant process condensate liquid effluent discharges, is exhausted via the 296-B-13 Stack. This is a 1,000 cfm capacity system treated by two HEPA filters in series. Electric duct heaters are installed for filter protection from moisture. Figure 7-5 is a schematic of the 296-B-13 system.

7.1.6.2 Source Term. The source term to the 221-BF Ventilation System is equivalent to that of 221-BB (Section 7.1.4.2) except that only the BCP (not the BCS) liquid effluent is involved. As in 221-BB, a portion of the building is accessible to personnel not wearing radiological protective clothing. The actual BCP batch tank vault area occasionally requires respiratory protection for access when posted as an airborne contamination zone, largely as a precautionary measure. While the airborne source term associated with BCP liquid interface is low relative to process solution air-liquid interfaces (such as the VVS source terms), it should be recognized that BCP is routinely released at concentrations well above other B Plant liquid effluents. Upsets associated with concentrator transients can (and have in the past) introduced even higher levels into the 221-BF vessels, when liquids of the same concentration levels as the concentrator bottoms were present.

7.1.6.3 Treatment System. The 221-BF ventilation exhausts through a two stage HEPA system having one filter cartridge in each stage. There is no prefilter. Each stage is DOP tested individually. Thermostatically controlled electric duct heaters are installed upstream of the HEPAs for moisture protection. A DF of at least 4 E06 would be expected under all conditions of normal operation of this system per Reference 7-5. Theoretical DF would equal or exceed 1.1 E07 and available DOP filter efficiency data confirms this figure. Exhaust fan modulation is provided by a manually operated, opposed-blade damper. A back-draft damper on the supply air inlet to 221-BF guards against potential for unfiltered back flow.

7.1.6.4 Sampling and Monitoring System. This effluent is continuously sampled and monitored by a generic sampling and monitoring system similar to the 291-B-1 installation. A hot air inbleed system has been valved out of service to avoid sample dilution. The transport line is well insulated and heat-traced. The CAM has a local readout at 221-BF, and remote alarms and readout are located in the 271-B Dispatcher's Office. Alarms are for low flow (loss of pump), high radiation, and loss of detector. Neither the monitor, pump, or the 296-B-13 Stack are on emergency power. The sampler is intertied to the stack fan operation. Additional details concerning the system are described in Section 7.1.1.4.

7.1.6.5 Administrative and Operational Controls. The 221-BF Ventilation System is subject to the same surveillance program and controls as that for 221-BB (see Section 7.1.4.5 and Table 7-5), except that the single CAM filter, which is changed weekly, constitutes the record sample for reporting purposes on this stack.

STACK: 296-B-13

EDP CODE: B690

LOCATION: 221-BF BUILDING

AVERAGE STACK FLOW - 1980: 570 + (15-20)% - STEADY

AREA EXHAUSTED: FILTERED EXHAUST FROM BCP COLLECTION TANKS AND CONDENSATE

REFERENCES(S): SK-02-43912, H-02-37869, B-PLANT COG. ENGR.

FILTER CONFIGURATION:

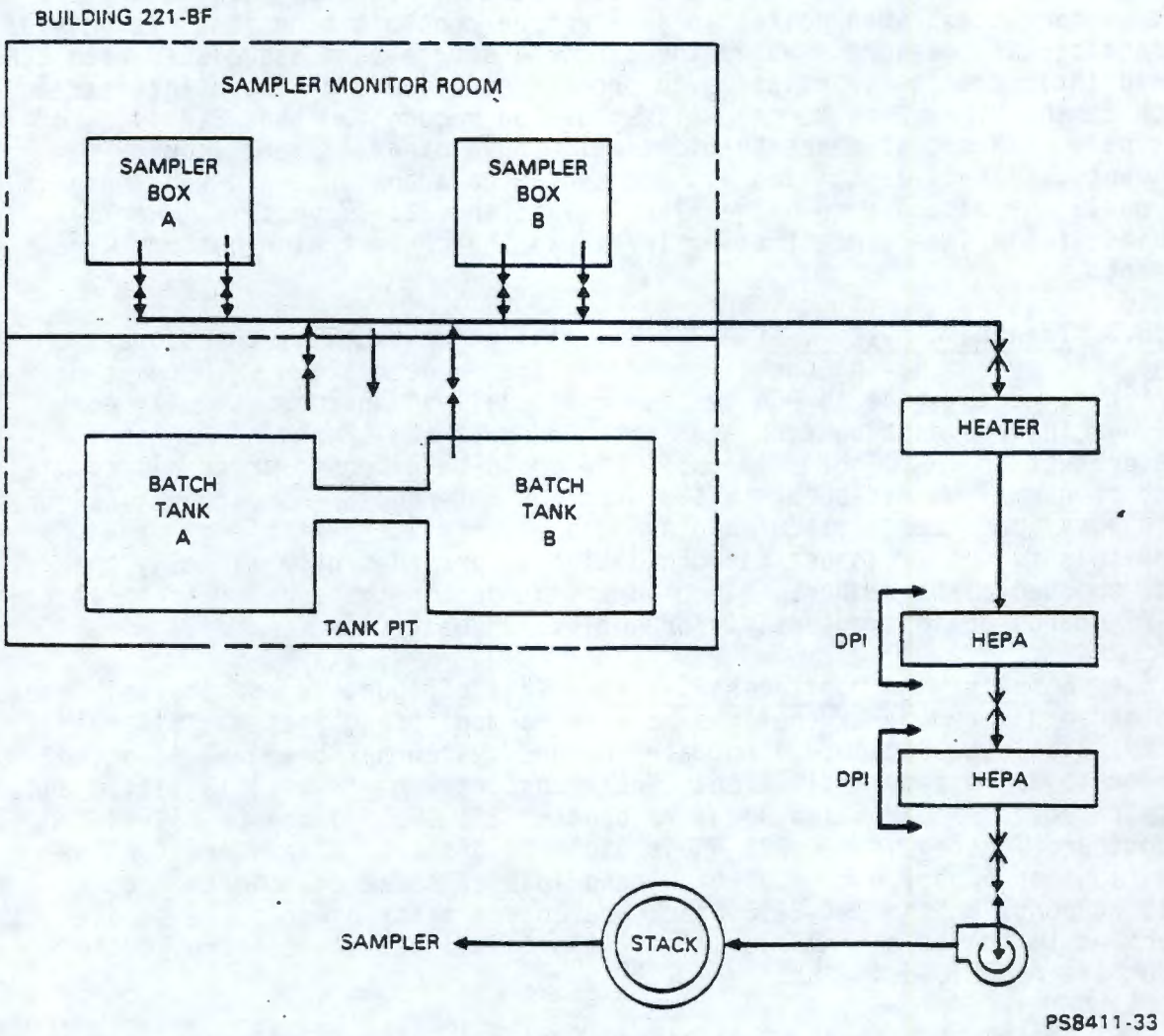


FIGURE 7-5. 296-B-13 Stack Details.

7.1.6.6 Additional Release Controls. Since the 221-BF Facility is not routinely occupied, shutdown of the 296-B-13 exhaust could be accomplished (in the event of unacceptable release concentrations) by access to the exhaust fan adjacent and external to the 221-BF Building. Similarly, the BCP effluent can be secured by shutdown of the E-23-3 Concentrator if 296-B-13 release levels lead to suspicion of the 221-BF source term.

7.1.6.7 Nonradiological Emissions. See 221-BB discussion, 296-B-5 Stack, Section 7.1.4.7.

7.1.6.8 System Compliance. The treatment system installed on this exhaust is considered adequate for the source term. The sampling and monitoring system achieves current industry standards (Ref. 7-3, 7-7) and provides accurate release concentrations. This stack has been upgraded by the installation of the generic stack sampling and monitoring upgrade discussed in Section 7.1.1.4 and 7.1.4.4, and is in full compliance with the radiological guidelines contained in RHO-MA-139 (Ref. 7-3).

### 7.1.7 212-B Exhaust System

As discussed in Section 5.2.2.2, 212-B Cask Transfer Station Building is served by an independent ventilation supply system and exhausts through roughing filters in the transfer cell to the 221-B Building main air tunnel. Section 7.1.1 detailed the characteristics of this airborne discharge to the environment.

### 7.1.8 Aqueous Makeup (AMU)

The aqueous makeup system is described in Chapter 5.0, and includes the chemical storage tanks, mixing tanks, and scale tanks for measurement. A chemical control laboratory is also provided to check the purity and concentration of the various chemical feeds required for the waste fractionization process.

Aside from sodium sulphate and sodium carbonate which are stored in the first floor, most of the AMU is located on the third floor of the 271-B Building. Typical chemicals stored in this area include rare earth nitrate, nitric acid, sodium hydroxide, sodium nitrite, sodium nitrate, and decontamination agents such as 1,1,1 trichloroethane and citric acid.

None of the chemicals used in the AMU are radioactive. There is no potential for radioactive release, and radiological sampling and monitoring are not provided.

The AMU tanks on the third floor are vented to the atmosphere through discharge vents on top of the 221-B Building. Air jets provide effluent control. No nonradiological sampling or monitoring is provided.

### 7.1.9 211-B Tank Farm

Chemical Tank Farm 211-B is located north of the 221-B Building and contains bulk storage facilities for chemicals used in the waste fractionization processes. Details concerning quantities and tank designations are provided in Chapter 5.0.

No radioactive material is stored in this area, and no potential for radioactive effluent exists. Hazardous chemicals such as nitric acid, anhydrous ammonia, sodium hydroxide, and similar waste fractionization process chemicals are stored in carbon steel or stainless steel tanks. The anhydrous ammonia is stored in a pressure vessel in the far northeast corner to allow dispersal of fumes by prevailing winds. In the case of hydroxyethylenediaminetetraacetic acid (HEDTA), the three 8,000-gal vertical stainless-steel tanks are surrounded by a 3-ft concrete dike to provide some secondary containment to minimize an environmental release.

No sampling or monitoring of nonradioactive hazardous waste effluent is provided although the tanks are vented to the atmosphere.

Under normal operating conditions, no environmental or personnel hazard is anticipated from the facility. Similarly, no problems are expected during internal B Plant accident conditions. Potential problems would develop from circumstances such as significant seismic events. A scenario for such an event and a safety evaluation is described in Chapter 9.0.

## 7.2 LIQUID EFFLUENTS

Chapter 4.0 of this SAR summarizes the principal design criteria applicable to radioactive byproduct and effluent management systems. Chapter 5.0 provides further design details of the liquid effluent systems. This section discusses further the liquid effluents associated with B Plant operation and assesses their compliance with applicable criteria.

A summary of the major B Plant liquid effluent discharge points is presented in Table 7-6. Table 7-7 provides typical (1983) liquid effluent radioactivity data (Ref. 7-1).

### 7.2.1 Cooling Water Waste Stream

7.2.1.1 Overview. The B Plant combined cooling water system (CBC) consists of two sewers, the 24-in.-dia. header from 221-B to the 207-B Retention Basins, and a 15-in.-dia. header to the diverter station at the 216-B-59 Emergency Retention Basin. Liquid from high-risk (high radionuclide inventory) tank cooling coils is routed to the 15-in. sewer through six cross-over subheaders which are continuously monitored. A separate continuous monitor downstream from all inlets to the 15-in. sewer line initiates automatic diversion to the 216-B-59 EmergencyRetention Basin

TABLE 7-6. Summary of B Plant Major Liquid Effluent Discharge.

| Stream designation | Description | Discharge point |
|---|---|---|
| BCS | B Plant steam condensate | 216-B-55 Crib |
| BCP | B Plant process condensate | 216-B-62 Crib |
| BCE | B Plant chemical sewer | 216-B-63 Ditch |
| CBC | (CNC/CSP) B Plant combined cooling water | 216-A-25 or 216-B-3 Ponds via 216-B-2-3 Ditch |

TABLE 7-7. Summary of B Plant Liquid Effluent Data (1983). (Ref. 7-1)

| Discharge stream | Effluents | Annual average concentration (μCi/mL) | Total radioactivity released (Ci) |
|---|---|---|---|
| Process condensate (BCP) | Total alpha | <5 E-07 | <1 E-02 |
| | Total beta | 2 E-03 | 6 E+01 |
| | $^{3}H$ | <8 E-07 | <2 E-02 |
| | $^{89,90}Sr$ | 8 E-04 | 2 E+01 |
| | $^{137}Cs$ | 7 E-04 | 2 E+01 |
| | $^{239,240}Pu$ | 4 E-08 | 1 E-03 |
| | $^{241}Am$ | <8 E-08 | <2 E-03 |
| Steam condensate (BCS) | Total alpha | <3 E-08 | <9 E-04 |
| | Total beta | 4 E-06 | 2 E-01 |
| | $^{3}H$ | 1 E-06 | 5 E-02 |
| | $^{89,90}Sr$ | 1 E-06 | 5 E-02 |
| | $^{137}Cs$ | 2 E-07 | 8 E-03 |
| Cooling water (CBC) | Total alpha | <6 E-09 | <4 E-02 |
| | Total beta | 1 E-07 | 8 E-01 |
| | $^{3}H$ | <6 E-07 | <4 E+00 |
| | $^{89,90}Sr$ | 5 E-08 | 3 E-01 |
| | $^{137}Cs$ | <1 E-07 | <6 E-01 |
| | U | 3 E-08 | 2 E-01 |
| Chemical sewer (BCE) | Total alpha | <4 E-08 | <1 E-02 |
| | Total beta | <7 E-08 | <3 E-02 |
| | $^{89,90}Sr$ | <3 E-08 | <7 E-03 |
| | $^{137}Cs$ | <5 E-08 | <2 E-02 |

in event of high activity. (The 15-in. sewer line is connected with the 24-in.-dia. header at the downstream diverter station, from which the combined flow is to the 207-B Basin.)

Flow to the 24-in. header is primarily from condensers and similar equipment. These contributing sources all have positive differential pressure at system interfaces which minimize the potential for contamination to cross through any leaks. Continuous monitoring of the 24-in. line downstream of all influents is not augmented by any automatic diversion. There is capability for manual diversion of the 207-B Retention Basin discharge to the 216-B-63 (BCE) Ditch. Figure 7-6 is a schematic of the CBC stream. Normal routing involves 15-in. discharge to the 24-in. line to 207-B Basins. The 207-B Retention Basins are discharged to the combined 216-A-25/216-B-3 Pond system via 216-B-2-3 Ditch based on field radiation monitoring evaluation of ten batch samples which are composited and analyzed in the laboratory to provide analytical records of discharge levels.

7.2.1.2 Source Term. This effluent results from heat removal processes required in B Plant operations. Virtually all CBC input originates as raw water supplied to the plant which has been circulated through one or more components having some type of heat exchanger function. Typically, the cooling water is separated by only one physical barrier (such as a coil or tube sheet) from the highly contaminated liquid or gaseous phase process solution which is being cooled. In most cases a positive pressure differential is maintained from the coolant to the process side of the heat exchanger, such that component failure will result in flow toward the contaminated side of the failed barrier. The CBC effluent is considered a potentially contaminated liquid waste because of the potential for these protective design measures to occasionally fail and result in contamination of the coolant. Typical CBC effluent concentration values average about 1.6 E-07 μCi/mL. However, process solutions can contain very high radionuclide concentrations as noted in Section 7.1.2.1. As an example, on November 7, 1963, a cooling coil leak in a B Plant vessel caused the release of approximately 30 Ci (primarily $^{144}Ce$) through the CBC system (Ref. 7-20). Numerous modifications and improvements to containment have been made since this incident. It is mentioned here only for its value as a reflection of the magnitude of the source term. "Worst case" contamination scenarios have been constructed for releases of this nature (see Chapter 9.0). Condensers generally have a much lower potential for coolant contamination because of the combined phase and pressure differences maintained across the physical boundary.

7.2.1.3 Disposal Site. The CBC effluent contributes approximately 300,000 $M^3$/M to the combined Gable Mountain (216-A-25) and B-Pond (216-B-3) system. These ponds are surface impoundments with no outlets such that the cooling water is removed only through percolation and evaporation. The water table is elevated in the vicinity of both disposal sites as a result of the large percolation volumes (Ref. 7-21). Both ponds are subject to the environmental surveillance program of surface water, ground water, soil, and biota sampling/analysis as outlined in RHO-MA-139 (Ref. 7-3) and implemented by the Environmental Surveillance and Control (ES&C) Group. Reference 7-21 is one of several characterization studies on these disposal sites. Total

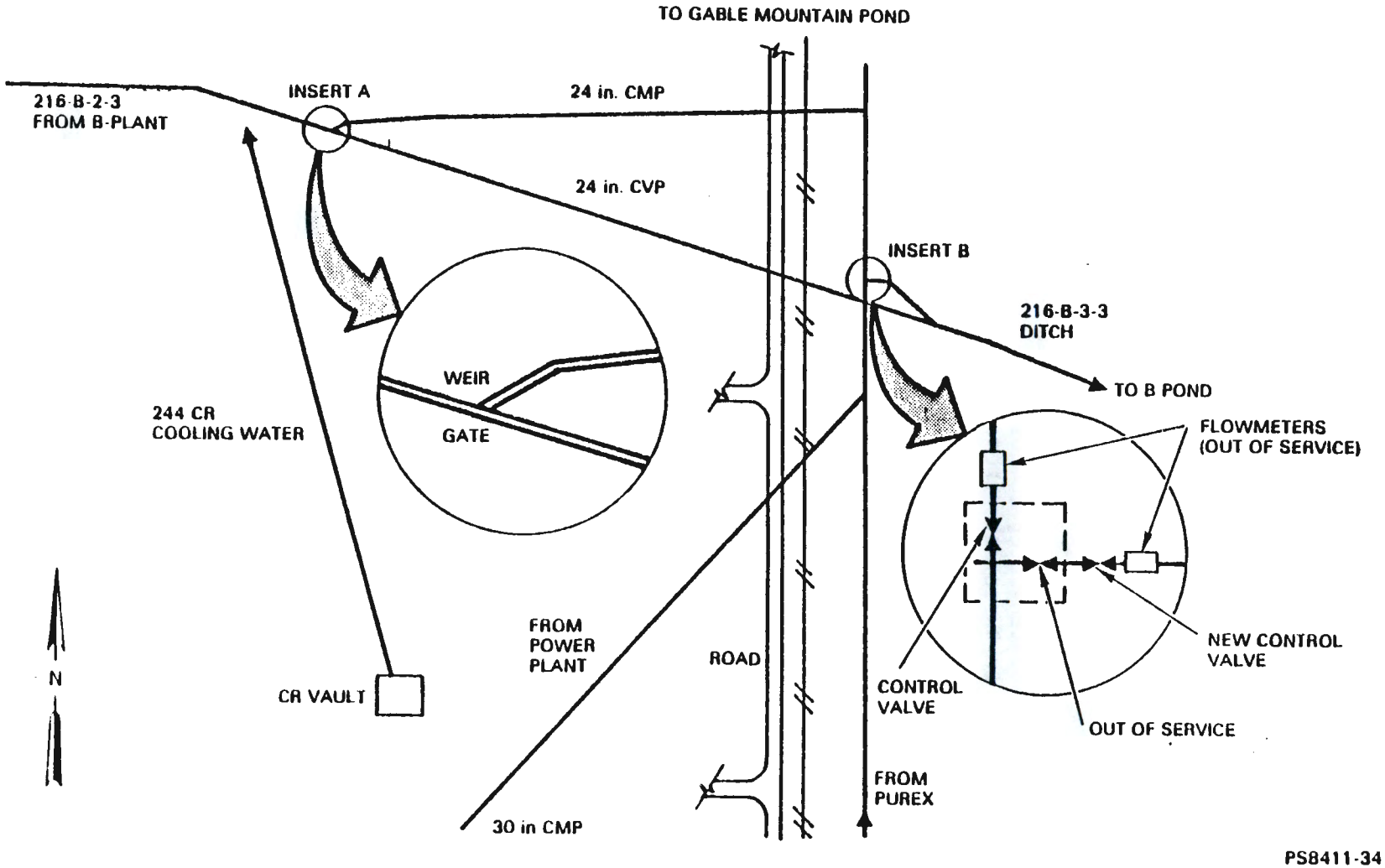


FIGURE 7-6. Effluent Pipelines and Transfer Capabilities for Gable Mountain Pond and B Pond.

capacity of the two ponds far exceeds the maximum CBC flow rate; however, 216-B-3 capacity has recently been expanded to support concurrent operation of CBC with the multiple 200 Area effluents which flow to these same sites. Figure 7-6 shows the effluent distribution system routed to the 216-A-25 and 216-B-3 Ponds.

7.2.1.4 Sampling, Monitoring and Flow Measurement. A batch-grab sample of the CBC stream is obtained at the 207-B Retention Basins prior to discharge, and discharge is based on the field (portable instrument) check of the sample. Two 100 mL samples are drawn from each full basin, field surveyed, and delivered to the 222-S Analytical Laboratory. One sample is composited for analysis on a ten-batch basis. The other sample is used for the monthly inventory composite. If detectable activity is found during the Operations/Radiation Monitoring field survey of the samples, a third (one liter) sample is taken from the basin for rush analysis. The turnaround for laboratory analysis of the ten-batch composite and reporting to B Plant Operations averages two to three days from the first batch discharge. Gross beta analysis of a single sample, which is suspect because of field instrument readings or plant upset, however, can be available in a matter of hours.

Monthly composite samples for inventory reporting purposes are analyzed for gross alpha and gross beta. Where indicated by gross analyses, isotopic analysis for $^{90}Sr$, $^{137}Cs$, tritium, and uranium are routinely reported. The CBC samples are not routinely analyzed for nonradiological pollutants (see Section 7.2.1.7).

Both the 15-in. and 24-in. cooling water sewers have in-line monitors connected to remote instrumentation at the Dispatcher's Office in the 271-B Building. The monitors are of similar design. They are gamma-sensitive sodium-iodide detectors inserted in a drywell which is installed in a flume-type arrangement at a standpipe in each of the respective CBC lines. There are no local alarms or readouts on either of these monitors. Except for the preamplifiers and detectors, all instrumentation is remote at 271-B. The 15-in. and 24-in. in-line monitors record on strip charts at this location. Primary (liquid) calibration is not feasible on the monitors as installed. A source check using a sealed $^{137}Cs$ source is performed biweekly on the monitors. High-level alarms and the 15-in. automatic diversion are checked for operability in conjunction with this source check.

The CBC system also is served by six subheader monitors on the 15-in. sewer cross-over feed lines coming from the 221-B Cells. These units consist of instrumentation similar to the in-line monitors, but with the detectors lowered in drywell risers which terminate at the pipe in question. These monitors serve to isolate the source of a CBC upset. The subheader monitors have "local" readouts at a panel board in 221-BB Building and remote ratemeter and alarm indication in the 271-B Dispatcher's Office.

The in-line monitors are set to alarm at 40 c/s on both 24-in. and 15-in. lines. Since liquid calibration is not feasible and isotopic identity of the source term would vary depending on the process function of the tank experiencing coil failure), these alarm set points cannot be meaningfully correlated with concentration limits in the CBC effluent.

Flow measurement of the CBC effluent is achieved via liquid level recording at the full 207-B Basin prior to release. A calibration/conversion chart for depth/discharge volume has been incorporated in the 207-B Basin operating procedures. The CBC flow rate is approximately 1,800 gpm.

7.2.1.5 Diversion/Retention/Shutdown Capabilities. The high risk portion of the CBC, the 15-in. sewer, can be diverted to the 280,000 gal 216-B-59 Emergency Retention Basin for retention of non-releasable effluent. Such diversion is automatic upon 15-in. CBC monitor alarm. If the location of the contaminant can be determined by the review of the subheader monitor readouts, unaffected subheaders normally routed to the 15-in. line can be manually diverted to the 24-in. line to reduce volume to the diversion basin. The piping and valving arrangement is diagrammed in Figure 7-7. Recycle capability exists via installed piping to transfer from 216-B-59 to 221-B Tank 9-1.

The 207-B Retention Basins provides some holdup of effluent to allow more operational flexibility. However, volume of the basins is insufficient to receive and hold the CBC flow during any prolonged upset condition. During normal operating conditions the 565,000-gal basins must be sampled and released approximately every 3 1/2 h to accommodate the 1,800 gpm flow. Although liquid in the 207-B Basins is not readily recoverable, the option of final discharge to the chemical sewer ditch (216-B-63) is available by manual valve alignment. This capability allows more convenience in evaluation and decontamination of an unavoidable "hot" discharge while in the 207-B basins than would otherwise result from normal routing to the ponds.

Selective elimination of some nonessential cooling water flows can reduce the volume of effluent, if appropriate, in response to a high-level discharge. This reduction has been accomplished routinely in the past to support effluent transport system maintenance such as line cleanout or valve repair. Complete shutdown of the CBC is not readily achievable.

7.2.1.6 Administrative and Operational Controls. Operation of 207-B (to switch from one side to the other of the basin) is accomplished locally. Routinely, (at least each shift), operations personnel inspect the basin, sample a side when full, and realign valves to fill the other side. Thus, system failure such as basin overflow or valve leakage, would be readily noted in the course of normal operations.

Analytical results of CBC samples are relayed to a computer terminal in the 271-B Dispatcher's Office to provide both rapid and documented transmittal of analyses. Out-of-tolerance concentrations are automatically flagged by this system.

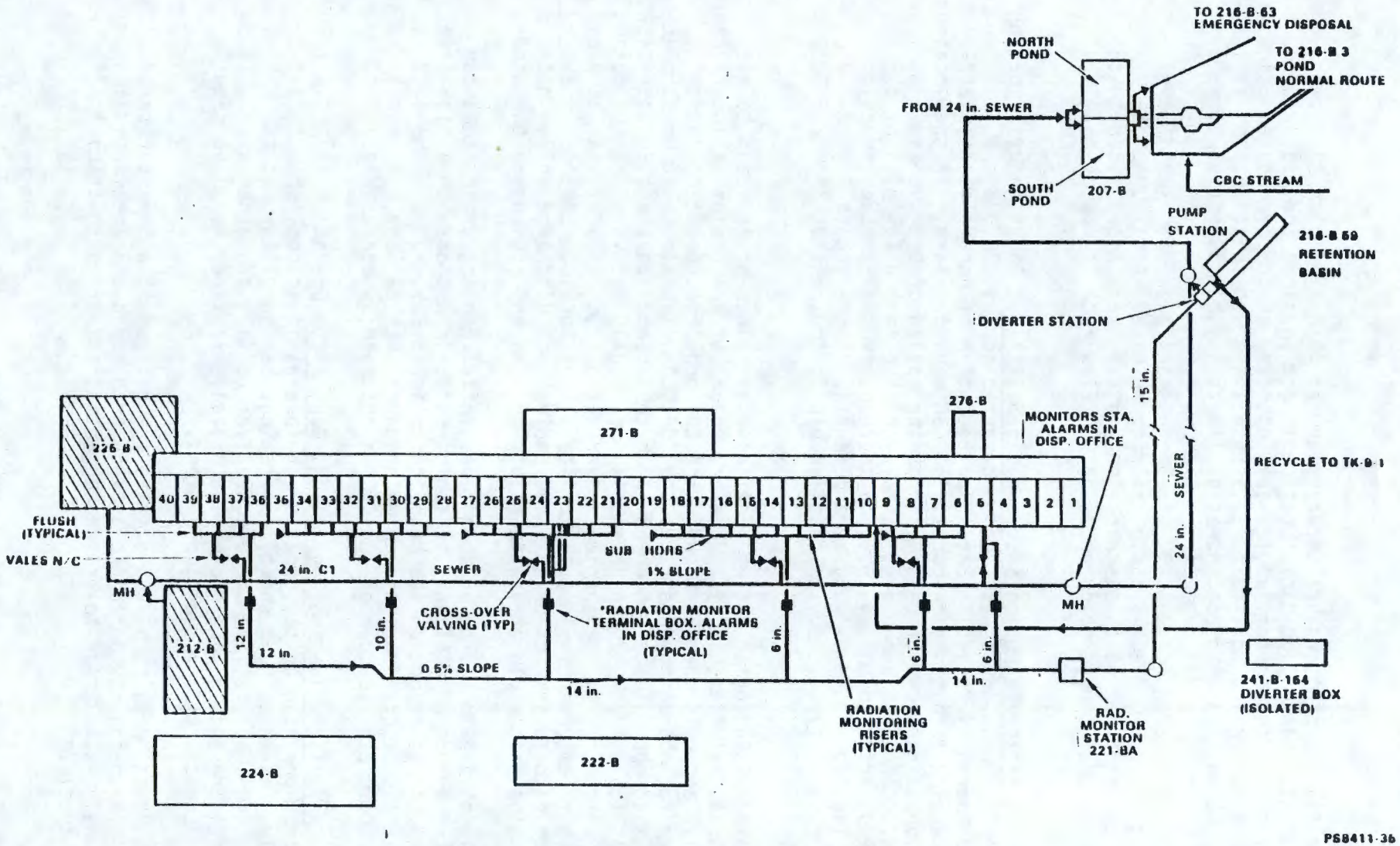


FIGURE 7-7. B Plant Cooling Water Waste System.

Monthly inventory composite analyses are tracked graphically to identify any trends such as slow chronic increases in CBC concentration which might be indicative of minor cooling coil leakage and gradual coil deterioration. Similarly, weight factors, specific gravities, and other measures on tanks and condensers served by CBC are closely tracked by Operations and Process Control Engineers within the facility for indications of equipment failure.

Instruments are checked and calibrated on established frequencies, and instrument technicians are available and assigned to the facility to support maintenance needs as necessary.

7.2.1.7 Nonradiological Pollutants. The CBC stream is not normally expected to contain any contaminants other than those found in the water source; therefore, this stream is not subjected to Rockwell's nonradiological liquid effluent sampling program (Ref. 7-19). Under upset conditions both chemical and radiological contamination can occur. The measurement of the radiological contamination will provide both radiological and nonradiological release information when related to the source term concentrations.

7.2.1.8 System Compliance. The inability to perform an in-place liquid calibration of the present CBC 15-in. and 24-in. discharge-line monitors makes it difficult to evaluate overall system ability to control release of radioactive materials. RHO-MA-139 (Ref. 7-3) requires that these monitors alarm at four times Table I concentrations (for cesium) or as-low-as-possible for a relatively "pure" strontium release as could occur for certain B Plant coil failures. The 15-in. monitor has initiated automatic diversion successfully in at least one past contamination incident (July 17, 1978).

The existing basin is lined with a minimum of 4 1/2-in.-thick concrete slabs. Similar concrete slabs are placed on the pond bottom. Thermal expansion joints, of a self-expanding cork filler, are placed between the slabs and at the basin corners. The joints are designed to accommodate thermal movement, and a waterstop is included to retain water. Liquid level monitoring is provided as a further precaution.

A liquid elastomeric membrane was applied to the structure after the concrete cured to protect against frost damage, to further seal the concrete, and to aid in decontamination should this be required. A free-span concrete roof, made of precast 24-in. double-tee sections is installed over the basin to keep out wildlife, tumbleweeds, and debris.

The current frequency of laboratory analysis of CBC liquid from 207-B Basins is set at every tenth "batch"; a batch being the filling-sampling-emptying cycle for one-half the basin. The ten samples are composited and the resultant composite analyzed for radionuclide activity concentrations. This system is primarily a cost-saving trade-off between an actual batch release (which would detain all liquid until laboratory confirmation) and a continuous discharge system (which would require high reliability of monitors and automatic diversion systems). If the CBC stream

becomes suspect for any reason, the ten batch frequency is modified to provide a rapid turnaround laboratory analysis of CBC gross beta activity on each batch prior to release of the next batch. In this way the volume of any improperly released liquid is greatly minimized.

7.2.1.9 Additional Liquid Influent to 207-B. Although the 242-B Laboratory Building is operated by PNL, there is a discharge line provided to transfer liquid radioactive waste to the 207-B Retention Basin. These transfers, which have amounted to 600-700 gal per transfer, have occurred with varying frequencies but have not exceeded four transfers per year. Typical radioactive concentration levels have been in the range of 0.2 μCi/L of uranium, with an isotopic concentration of about 0.2% $^{238}U$.

Transfers are controlled administratively and require that 100 mL samples of every batch proposed for discharge be analyzed for radioactive content and the discharge be approved by B Plant Process Engineering management. Discharges are then coordinated through B Plant Operations personnel according to administrative procedures.

### 7.2.2 Process Condensate Liquid Effluent

7.2.2.1 Overview. The B Plant process condensate (BCP) from Cell 23 low-level waste concentrator exits 221-B to the 221-BB Building condensate pit BCP weir tank. An off-line continuous monitor surveys the contents of this weir tank. The overflow from the weir tank flows to the 221-BF Facility into two alternatively filling 13,000 gal holding tanks. Sampling, analysis, and emptying of one tank occurs as the other is filling. Normal discharge is to 216-B-62 Crib although recycle capability is in place. All pumping and switching operations are controlled from the panel board at Operating Gallery 221-B, Cell 23. The BCP stream is diagrammed in Figure 7-8 and 7-9. This effluent typically contains relatively high concentrations of $^{90}Sr$, $^{137}Cs$, and ammonia.

7.2.2.2 Source Term. The low-level waste concentration process has been discussed in Chapter 6 of this SAR. The BCP stream is generated as the condensed overheads resulting from volume reduction and ammonia volatilization from various liquid wastes (byproducts of the B Plant fission product recovery processes). The radionuclide concentrations introduced to the BCP are a complex function of the chemistry and activity of the concentration feed solutions; the decontamination factor achieved by the concentrator and its deentrainer; and the efficiency of the systems condenser in separating the vaporized liquid contaminants from the concentrator offgas (VVS#2) stream.

7.2.2.3 Disposal Site. The BCP effluent is discharged to the 216-B-62 Crib. Depth to groundwater at the site is approximately 283 ft (Ref. 7-22). Discharge volume is approximately 2.5 million L/mo. The groundwater in the vicinity of this crib is sampled and analyzed monthly for gross beta and $^{90}Sr$ activity and quarterly for $^{137}Cs$. Liquid levels in active cribs such as 216-B-62 are routinely checked to assure that percolation rates are not exceeded by discharge rates. Reference 7-23 provides detailed characterization of the 216-B-62 Facility.

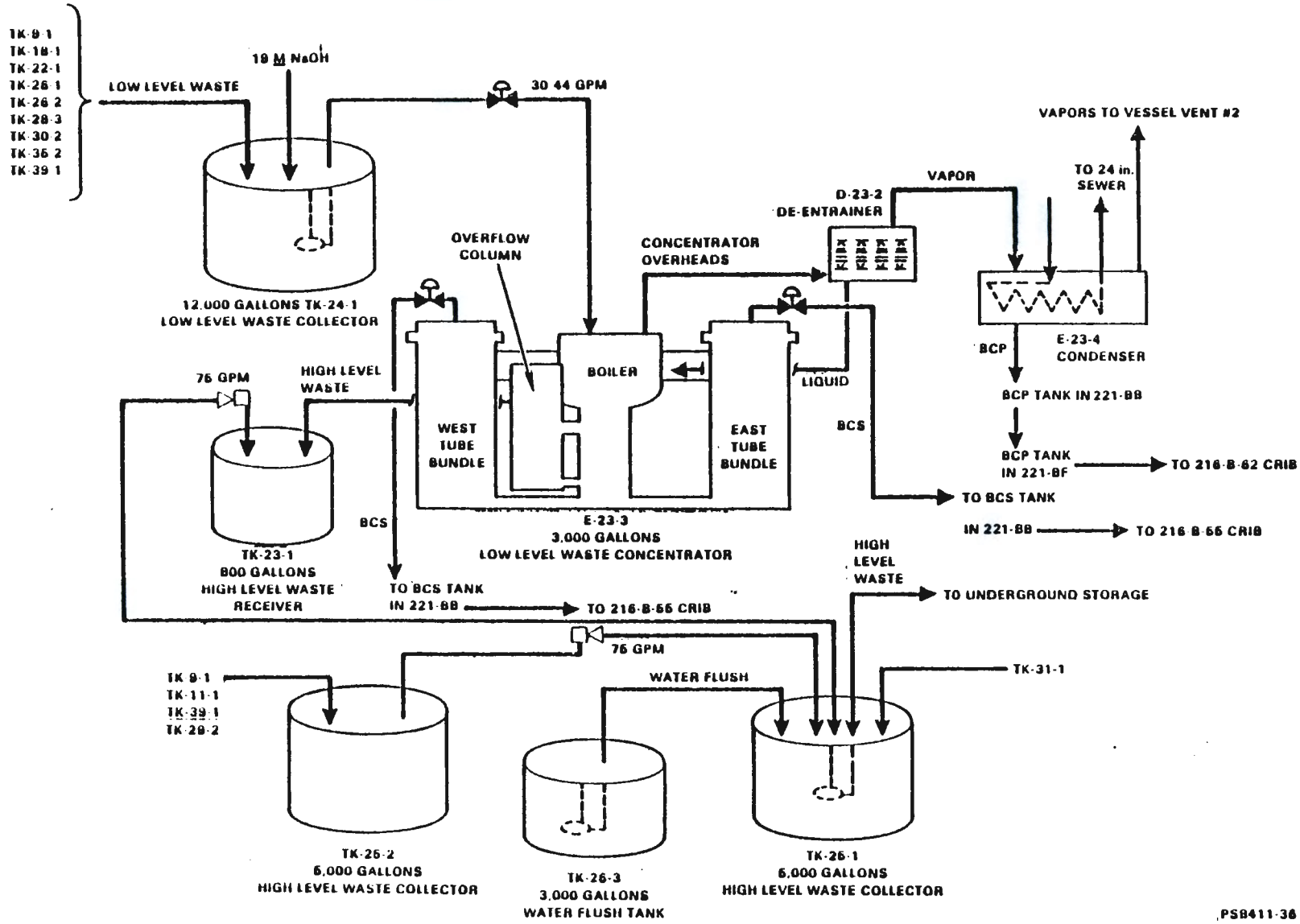


FIGURE 7-8. B Plant Low-Level Waste Concentration Flow Diagram.

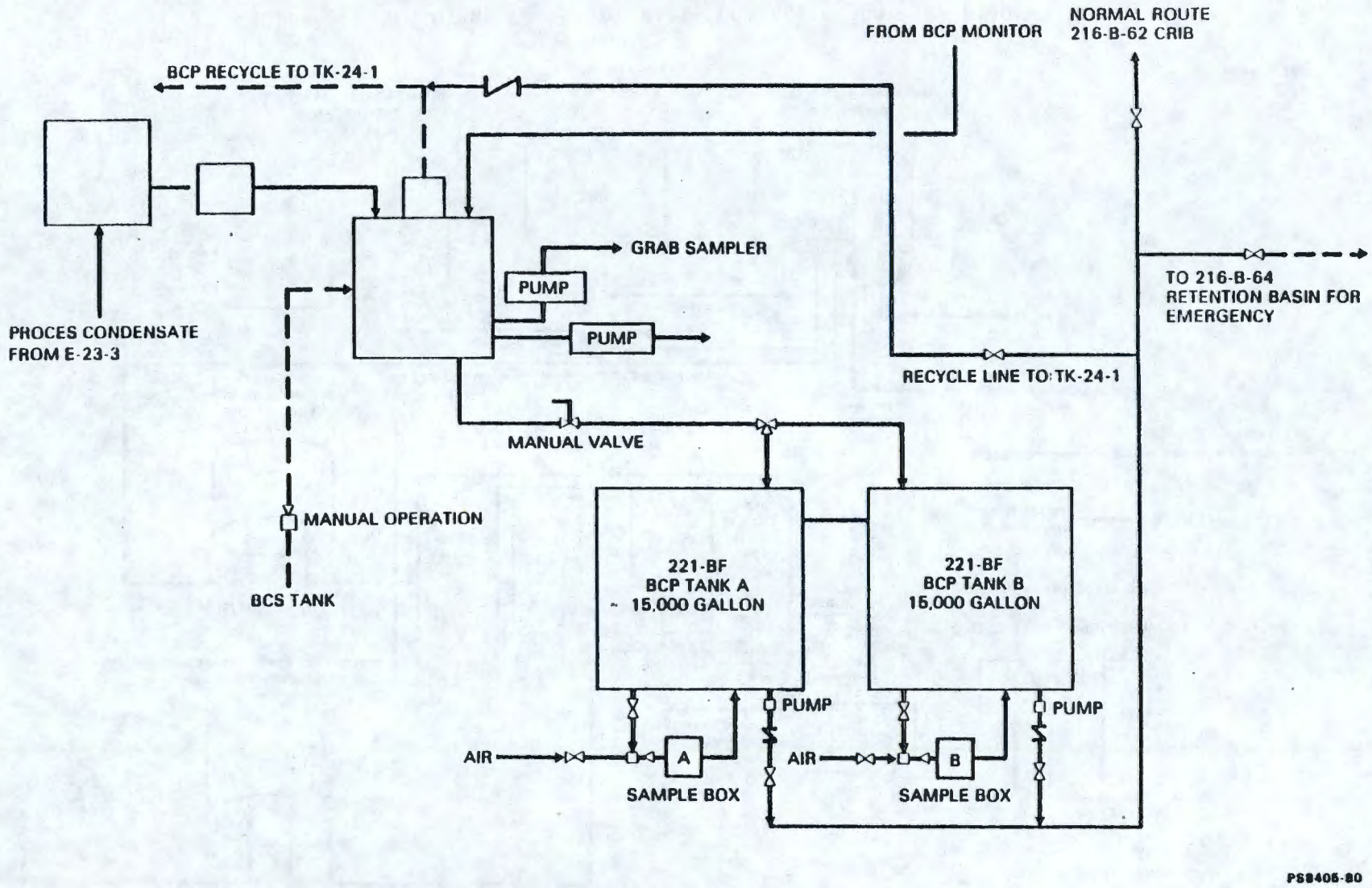


FIGURE 7-9. BCP System.

7.2.2.4 Sampling, Monitoring, and Flow Measurement. The full BCP tanks (A and B) in 221-BF Building are agitated, sampled, and held for laboratory analytical results before being emptied. As one tank is being analyzed and discharged, the other is filling so that continuous concentrator operation can be supported. The samples are drawn via vacuum into specially designed sampler boxes. Two 100 mL samples are drawn from each full holding tank after agitation and routed to the 222-S Analytical Laboratory. One of these samples is immediately analyzed, and the other is held for monthly inventory composite makeup. On the basis of the batch sample, a volume in the 221-BF Tanks may be either discharged to 216-B-62 or recycled as concentrator feed. The 100 mL samples which correspond to recycled batches are then deleted from the monthly discharge composite makeup. Immediate turnaround samples are analyzed for gross beta, and $^{90}Sr$ analysis may follow if indicated. Monthly composite analyses are appropriately more comprehensive, and include analyses for gross alpha, gross beta, gamma energy analyses, $^{90}Sr$, and U.

Since the BCP effluent is subject to batch holdup and sampling prior to release, continuous monitoring is not required for environmental protection. A continuous off-line monitor is nevertheless in operation, monitoring a stream drawn from the 221-BB BCP weir tank for both beta and gamma activity. The monitor consists of dual probes sharing a common shield pig within an enclosure in the 221-BB Building. The beta monitor is a plastic scintillator separated from the stream by a thin mylar window. The gamma system is a standard NaI unit which views the BCP stream opposite the beta system within the same housing. Modular NIM-BIN type instrumentation for the detectors is also located in 221-BB including local ratemeters. Remote alarm ratemeters are located in the 271-B Dispatcher's Office, a continuously occupied area.

Primary liquid calibration has been attempted on this system in the past but because of ongoing refinements and routine maintenance, correlation of ratemeter readings to BCP concentrations is tentative. The equipment is utilized primarily for trend indication to assist in processing decisions relative to low-level waste concentration. Monitor indications in combination with sample results, for example, may indicate need to empty and flush the concentrator or to recycle via 221-BB to avoid contamination buildup in 221-BF Tanks.

Flow measurement of the process condensate stream is recorded on a batch discharge basis via the calibration from monitored tank weight-factor reading per B Plant Standard Operating Procedures. The weight factors are recorded from a strip chart in the 221-B Operating Gallery at Cell 23. Discharge volume is also measured by dip tubes positioned above the inclined weir in the effluent stream at 221-BB. This measurement is not applicable to discharge volume to 216-B-62 unless it is routinely corrected for volumes recycled via 221-BF Building. It is used most frequently as a process control instrument rather than for effluent control.

7.2.2.5 Diversion/Retention/Shutdown Capabilities. As depicted by Figure 7-9 and discussed in previous sections, the BCP discharge can be recycled via installed piping to Tank 24-1 in the B Plant low-level waste treatment system from either the 221-BF-A and -B Tanks or the BCP weir tank in 221-BB. Tank 24-1 is a 12,000 gal feed tank for the waste concentrator. The auto recycle pump switch is located in the Dispatcher's Office to energize the 221-BB weir tank pump. A position indicator light for this recycle mode is also mounted locally at 221-BB. Valving and actuation of recycle from the holding tanks in 221-BF is accomplished at the Cell 23 panel boards in the 221-B Building Operating Gallery.

Shutdown of low-level waste concentration is always a viable option to react to unacceptable BCP discharge concentration, although other B Plant processes may also be impacted by the limited liquid lag storage within the facility. Present BCP liquid effluent radioactivity concentrations do not conform to the administrative control guides of RHO-MA-139 (Ref. 7-3). This situation is discussed in Section 7.2.2.8.

7.2.2.6 Administrative and Operational Controls. Operation of the entire low-level waste concentration process, including the BCP effluent portion, is detailed in written procedures. These procedures also address response to off-standard conditions. System operating parameters are routinely checked and recorded during waste concentration, with review by both management and engineering personnel.

Analytical results of BCP samples are transmitted to a computer terminal in the 271-B Dispatcher's Office to provide rapid and documented transmittal of analyses on which release decisions are based. Out-of-tolerance concentrations will be automatically flagged by this system. Monthly inventory composite analyses are tracked graphically to identify any indicative trends in release concentrations. Instruments are checked and calibrated on established frequencies, and maintenance personnel are available and assigned to the facility to support maintenance needs as required.

7.2.2.7 Nonradiological Pollutants. The E-23-3 Concentrator serves, by intent, to drive ammonia off from the high-level wastes directed to the tank farms. As a result, both the concentrator condensate and offgas are high in ammonia content. All other nonradiological constituents which might be of concern (such as heavy metals) are effectively concentrated in the concentrator bottoms. This has been confirmed by nonradiological pollutant screening of BCP samples for pH, ammonia, cadmium, chromium, lead, silver, nitrate, alkalinity, conductivity, and total organic carbons (Ref. 7-19). This testing showed that pH and ammonia concentrations were relatively high compared to appropriate RHO-MA-139 criteria. These properties of the BCP stream are of concern primarily because of their effect on sorption capacity of the soil column for radionuclides. Specifically, a high ammonium cation + concentration will reduce $^{137}Cs$ sorption which may cause $^{137}Cs$ to migrate deeper in the soil column beneath the crib (Ref. 7-23).

7.2.2.8 System Compliance. The process condensate liquid effluent system does not presently conform to the administrative control guides of RHO-MA-139 for the annual average concentrations of $^{90}Sr$ and $^{137}Cs$. As a result of these isotopic concentrations, the total beta concentration level is also exceeded (see Table 7-7).

The system is presently operating within the framework of an approved compliance plan which is in place to resolve these discrepancies. It is presently projected that the stream will be brought into compliance by October 1, 1986. Four major steps are identified for reduction of the BOP concentrations. These include:

- A chemical cleanout of the present deentrainer and a flush of the BOP lines
- The installation of a spare D-23-2 Deentrainer
- The design and fabrication of an improved deentrainer, and
- The design and installation of an ion exchanger if required.

The BCP line and equipment flushes, and the installation of the spare deentrainer, are planned for completion in FY 1985. This should reduce the BCP source term, and the system compliance capabilities will again be reevaluated at that time.

### 7.2.3 Steam Condensate

7.2.3.1 Overview. The B Plant Steam Condensate (BCS) from most process contact coils and tube bundles exits 221-B to a weir tank located in 221-BB. A portion of the weir tank volume is continuously circulated to an off-line monitor and sequential sampler in 221-BB. The stream exits 221-BB continuously to 216-B-55 Crib. Manual diversion is normally available for the 216-B-64 Retention Bladder, although this option is not presently available due to the poor condition of the liner and cover. An Engineering Study has recommended an upgrade similar to that done for 216-B-59 (see Section 7.2.1.8). Provisions for automatic, motor-actuated diversions are presently inoperable. Pump-back capability to 221-B Building has been installed on 216-B-64. A flow schematic of the BCS system is shown as Figure 7-10.

7.2.3.2 Source Term. This effluent results from heat addition processes required for B Plant operations. Virtually all BCS input originates as steam supplied to the plant and has been circulated through some type of heat exchanger. In most cases the steam and condensate are separated by only one physical barrier (such as a coil or tube sheet) from the highly contaminated process solutions being heated. In virtually all cases, a positive pressure differential is maintained from the steam to the process side of the heat exchanger such that component failure will result in flow toward the contaminated side of the barrier. The BCS effluent is considered a

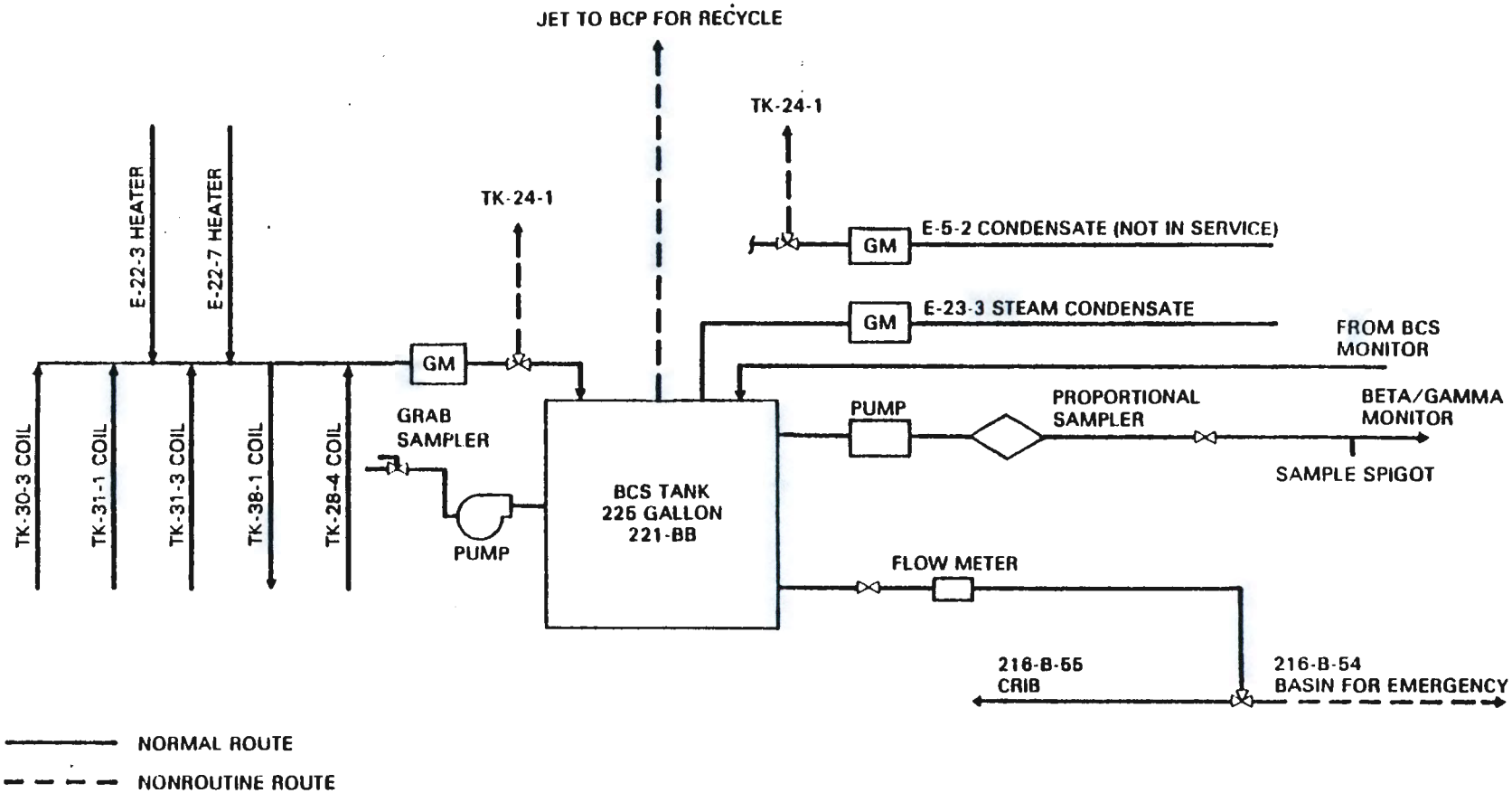


FIGURE 7-10. BCS System.

potentially contaminated liquid waste because of the potential for these protective design measures to occasionally fail and result in contamination release via the steam condensate discharge. A few heat exchangers with excessively high radionuclide inventory at risk or with a history of failure have been eliminated as BCS inputs. Steam condensate from the E-20-2 Concentrator for example is routed to the low-level waste concentrator rather than to BCS. At present, steam supplied to the E-23-3 Concentrator constitutes the major source of BCS flow. Vessel Vent #1 and #2 steam heaters as well as cooling water from selected process vessels is also discharged to the BCS.

Typical process solutions can contain very high radionuclide concentrations as noted in Section 7.1.2.2. A worst case BCS release scenario involves a steam coil failure followed by steam service interruption which allows the coil to depressurize and permits entry of process solution. If the coil is subsequently repressurized with steam, the contaminated coil volume (or some portion of it) is then released in the BCS liquid stream (see Chapter 9.0).

7.2.3.3 Disposal Site. The BCS effluent is discharged to the 216-B-55 Crib. Depth to ground water at this site is approximately 290 ft (Ref. 7-20). Discharge volume varies from 4 to 8 million L/mo. The ground water in the vicinity of the crib is sampled and analyzed monthly for gross alpha and beta activity. As noted in the BCP discussion, crib liquid levels are checked weekly to verify that percolation is not exceeded by discharge flow rate.

7.2.3.4 Sampling, Monitoring, and Flow Measurement. A flow-proportional sampler located in 221-BB samples the BCS from a stream drawn continuously from the weir tank and pumped to the sampling and monitoring system. The sample is retrieved daily and routed to the 222-S Laboratory for analysis. At the laboratory, a portion of the sample is analyzed on a rapid turnaround basis for gross beta activity. The remainder of the sample is used to construct the BCS monthly composite sample whose analyses of gross beta, gross alpha, gamma energy, and $^{90}Sr$ are used in discharge inventory reporting.

The flow-proportional sampler is actuated by a signal from the BCS magnetic flowmeter totalizer. Grab sampling can be accomplished to check monitor-indicated spikes or in the event of sampler failure.

The BCS monitor is located in 221-BB. It is adjacent to and equivalent to the BCP monitor described in Section 7.2.2.4. Both monitors are scintillation detectors; however, the function of the BCS monitor differs from the BCP in that the steam condensate is continuously released, based largely on reliance in the monitor to detect an upset condition, whereas the BCP effluent is subject to batch holdup and sampling prior to release.

The BCS discharge volume is measured by a magnetic flowmeter electronically coupled to the totalizer on the panel board at Cell 23 in the 221-B Operating Gallery. The totalizer is read and recorded each shift. The flowmeter electronics are routinely checked for operability. Flow rate is on the order of 30 gal/min, varying primarily with steam supply to the E-23-3 Concentrator.

7.2.3.5 Diversion/Retention/Shutdown Capabilities. As implied in previous sections, the BCS effluent is equipped with monitor actuated automatic diversion to the 216-B-64 rubber bladder retention basin. This facility has a capacity of 50,000 gal. Valving at the 216-B-64 Pump Pit allows recirculation of the contents of the bag prior to sampling and recycle to Tank 24-1 via the BCP system in 221-BF Building. Automatic diversion of BCS will be operable prior to receipt of PUREX CAW. Shutdown of the E-23-3 Low-Level Waste Concentrator can effectively eliminate the BCS flow if necessitated by equipment failure, since only a small portion of the discharge volume is contributed from other steam coils.

7.2.3.6 Administrative and Operational Controls. The controls described for operation of the BCP are equally applicable to the BCS (see Section 7.2.2.6). The sampling equipment in 221-BB is checked daily as a minimum. Valving for diversion of crib flow to the 216-B-64 bladder is clearly marked. Steam coils associated with the BCS source term are hydrostatically tested annually to verify their integrity.

7.2.3.7 Nonradiological Pollutants. The BCS stream is not normally expected to contain any contaminants other than those found in the source steam. This status was verified by a nonradiological pollutant screening program conducted in 1982 (Ref. 7-19). Until mixed stream regulations are adopted, the BCS stream is considered to be a mixed hazardous waste and radioactive waste stream, so that radiological monitoring is required. No potential exists for the release of nonradiological hazardous effluent without accompanying radiological indications.

7.2.3.8 System Compliance. The reliance of this effluent control system on monitor-actuated automatic diversion constitutes an area of current noncompliance which is being addressed. The 216-B-64 valves have been repaired and options for repair or replacement of the bladder are under review. Upgrades to the monitoring system to support continued B Plant operation are under consideration. In the meantime, when the BCS stream contains high activity levels, it can be transferred from the BCS Tank to the BCP Tank, in the 221-BB Building by a steam jet. Then, by activating the automatic recycle pump from the dispatcher's office, the BCS can be recycled to TK-24-1 for processing.

### 7.2.4 Chemical Waste

7.2.4.1 Overview. The B Plant Chemical Sewer (BCE) is diagrammed in Figure 7-11. This stream receives miscellaneous liquid wastes including nonradiological chemical make-up tank overflow, tank flushes, various floor drains, and similar sources with low probability for radionuclide contamination.

The BCE stream is discharged to the 216-B-63 open trench via a 15-in.-dia. clay and carbon-steel sewer pipe. A flow measurement weir is located at the outfall to the trench. The portion of the total BCE stream originating in the 221-B Building is monitored for gross gamma activity with automatic diversion capability to Tank 10-1. The stream is sampled at

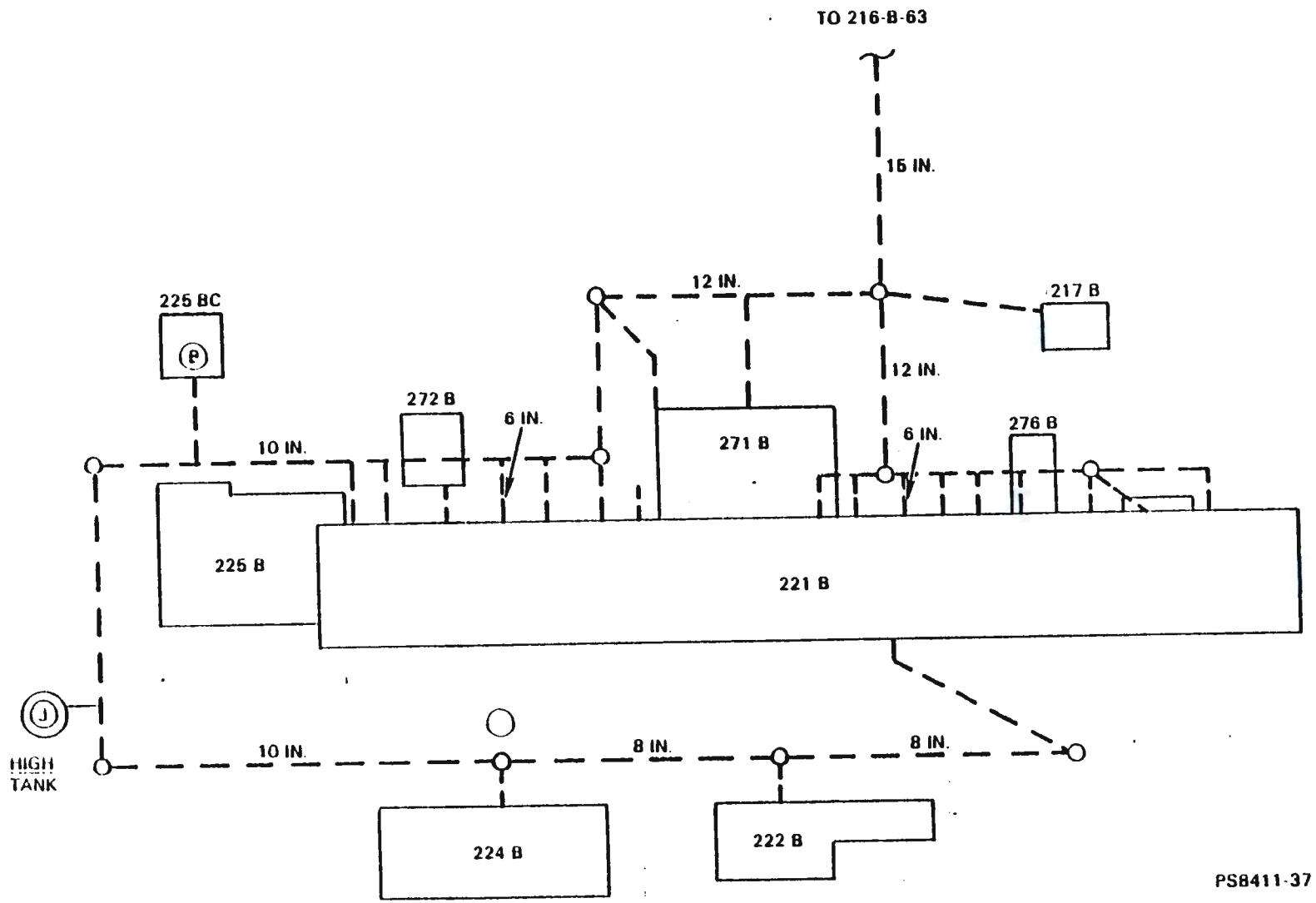


FIGURE 7-11. BCE Flow Diagram.

2904-EA Shack north of B Plant by a sequential (time-proportional) sampler. A sample is submitted weekly for laboratory analysis. Figure 7-10 shows the BCE system.

7.2.4.2 Source Term. Table 7-8 lists the BCE contributors. This effluent presents the highest potential among the B Plant liquid effluents for non-radiological pollutants released to the environment. It also has some potential for radiological contamination, primarily through upsets in the 221-B Pipe or Operating Galleries whose floor drains are normally routed to BCE.

The WESF has a dual floor drain system. Capability to drain to BCE exists but has never been used.

7.2.4.3 Disposal Site. The 216-B-63 Ditch is a percolation/evaporation trench about 1,400 ft long. The depth to ground water is about 216 ft (Ref. 7-20). Groundwater is routinely sampled from a well in the vicinity of the trench and analyzed for gross beta and nitrates. Additionally, the open trench radiological condition is closely monitored through a program of water, soil, and biota sampling documented in the Environmental Surveillance and Control Manual (Ref. 7-24).

7.2.4.4 Sampling, Monitoring, and Flow Measurement. The chemical sewer is sampled by a sequential (time-proportional) sampler located in a metal sampling shack, 2904-EA, north of the B Plant complex. On a weekly frequency the accumulated holding tank volume of this sampler is agitated and samples are drawn from it for submittal to the laboratory. If necessary, a small process control sample can be analyzed on a rapid turnaround basis with gross beta and pH results available to B Plant management within approximately one shift of sample delivery. The remaining sample is used to construct monthly composites which are subjected to radiological and nonradiological analyses for total alpha, total beta, gamma energy, $^{90}Sr$, and pH.

The 221-B Header, which is the only BCE input with a credible probability of contamination as a result of possible radioactive contamination from the sumps in the electrical gallery, is monitored for gross gamma accident conditions by a NaI scintillation detector mounted adjacent to the stainless steel pipe in the electrical gallery at Cell 5. High activity registered by this monitor will automatically initiate diversion of this portion of the BCE stream to Tank 10-1 in Building 221-B. A local ratemeter is provided with a remote audible alarm and panel light indicating high BCE radiation in the Dispatcher's Office. The monitor is set to actuate this diversion function at 2 mR/h.

The BCE stream volume is measured by a float-activated flow rate indicator and totalizer located at the weir box immediately upstream of the outfall to the 216-B-63 Ditch. The eight digit totalizer is read and recorded weekly. Flow averages approximately 150 gpm.

TABLE 7-8. Sources Contributing to the B Plant Chemical Sewer Effluent.

- Chemical storage make-up tank drains - 271-B - first floor
- Chemical storage tank cooling water - 211-B
- Organic make-up building floor drains - 276-B
- Aqueous make-up tank farm and tank car load-out drains - 211-B
- Chemical eyewash sinks and showers - 221-B
- Chemical drains and floor drains - 271-B
- Aqueous make-up chemical drains - 271-B - third floor
- Heating, ventilation, air cooler overflow, and air conditioning steam condensate - 221-B
- Line traces
- The Waste Encapsulation and Storage Facility (WESF) chemical sewer and 225-B fan cooling water
- Two street drains south of 221-B
- Overflow from water tower
- 221-B Compressor for process and instrument air liquids
- Steam condensate from 222-B and 224-B streams.

Additionally, as circumstances require, the following streams can be routed to either Tank 10-1 or the BCE stream using the selector switch in the B Plant Dispatcher's Office:

- All floor drains in pipe and operating galleries - 221-B
- Operating gallery tank overflows and drains - 221-B.

7.2.4.5 Diversion/Retention/Shutdown Capability. Diversion of the 221-B BCE header to Tank 10-1 was mentioned previously. The flow rate of this stream is less than 10 gpm. The valve to accomplish this diversion is a motor-operated, two-way valve located in the electrical gallery about 5 ft downstream of the gamma monitor. A manually operated override valve is also provided. Remote controls for the manual valve operation and position-indicator lights are located in the Dispatcher's Office. Tank 10-1 is a 10,000 gal stainless steel tank located in Cell 10. Liquid level in

Tank 10-1 is monitored via a weight factor readout and volume conversion chart. Leakage or overflow is monitored by the Cell 10 sump alarm. From Tank 10-1, waste can be routed to tank farms via TK-9-1, TK-25-2, and TK-25-1 or via the low-level waste concentrator.

If 216-B-63 is contaminated because of CBC diversion or other upset conditions, and its use is not warranted, flow of the BCE stream can be diverted to the B Pond or Gable Mountain Pond via the 216-B-2-3 trench (normal cooling water disposal route).

7.2.4.6 Administrative and Operational Controls. Procedures for Dispatcher response to any radiological upset in the 221-B Galleries (such as a CAM alarm) delineate the requirement to actuate 221-B Chemical Sewer Header (BCE) diversion to Tank 10-1. Additionally, this diversion may be required during any "high-risk" operations in the galleries where potential is increased for loss of contamination control.

Analytical data transmission, review, and trend analysis parallels that of the other B Plant liquid effluents previously discussed (see Section 7.2.1.6 and 7.2.2.6). Controls related to the nonradiological contaminant potential of this effluent are discussed in the section that follows.

7.2.4.7 Nonradiological Pollutants. Chemicals such as HEDTA, EDTA, nitric acid, ammonium carbonate, hydroxyacetic acid, and sodium hydroxide are stored in relatively large amounts and varying concentrations to support B Plant chemical processing. Routine inventory surveillance is conducted on these storage tanks. Smaller quantities of other liquids such as 55 gal drums of sulfuric acid are also stocked in BCE drainage areas.

The HEDTA and EDTA are prohibited from being discharged to the environment because of their possible effect on radionuclide transport through the soil column in the 216-B-63 Disposal Site. The release of any other hazardous chemicals, as defined in the EPA (Ref. 7-25) and State of Washington (Ref. 7-26) Regulations, is regulated by law. Where appropriate, procedures may require neutralization and/or dilution before release. The EPA and state regulatory guidance is reflected in RHO-MA-139 (Ref. 7-3) and release of hazardous waste is limited to the criteria specified in this document. Normal operation of BCE provides a sizable volume of cooling water flow which will dilute an accidental release.

7.2.4.8 System Compliance. Leakage of the vitreous clay portion of the BCE transport piping from the facility to the intended disposal site has been documented (Ref. 7-27). Because much of this loss is upstream of the present sampling system, the sample is not considered representative of the BCE discharge to the environment. Additionally, the sampler is time-proportional which only achieves flow-proportionality if the flow rate is constant. A continuous pH monitoring capability is required on effluents with potential for chemical release (Ref. 7-3). These areas of noncompliance have been identified by company internal audits of the B Plant effluent systems and are in progress of solution. In addition, portions of the chemical sewer have been relined, and several small subheaders have been removed to reduce the leakage mentioned above.

### 7.2.5 Sanitary Waste

Sanitary waste generated within the B Plant complex is drained to septic tank-tile field systems nearby. This disposal is in adherence with Benton County Health Department Guidelines. Administrative controls such as design separation, backflow prevention, postings of previously contaminated areas, and procedural precautions are in place to ensure that radiological contaminants are not inadvertently introduced into these sanitary waste disposal systems. Sinks and showers designated for decontamination are not interconnected with the other sanitary waste systems. With this exception, the manner of sanitary waste disposal presents only "hazards of a type and magnitude routinely encountered and/or accepted by the public (Ref. 7-4) and therefore will not be further detailed here.

### 7.2.6 Byproduct (High-Level) Waste

Recovery of cesium and strontium fission products at B Plant results in other liquid wastes which may be termed "high-level" relative to the comparative activity concentrations in the effluents discussed previously. These high-level liquid wastes are pumped to underground double-shell, radioactive-waste storage tanks to await final disposal. Volumes of transferred waste have ranged from 400,000 gal in 1981; to 1.6 million gal in 1984. Approximately 40% of this was flush water. Pumping is via buried encased lines which are subject to routine pressure testing. Leak detection capability is provided by leak detectors at various points along the concrete encasement. These measures protect against release to the environment from this pathway. Operation of the tank farms and associated volume reduction and solidification is outside the scope of this SAR.

## 7.3 SOLID WASTE

Solid waste generated at B Plant are segregated into radioactive and nonradioactive categories. Waste items or materials are considered radioactive (Ref. 7-11) if any of the following criteria are met:

1. Item, material, or equipment has a specific activity greater than 2 nCi/g of material matrix

2. Item, material, or equipment has fixed or removable surface contamination (determined under conditions specified in the reference)

   greater than 1 pCi/cm$^2$ alpha (220 dpm/100 cm$^2$)
   greater than 10 pci/cm$^2$ beta-gamma (2.200 dpm/100 cm$^2$)

3. It is classified as a radioactive source.

RHO-MA-139 (Ref. 7-3) contains release criteria for soil.

Solid low-level, radioactive waste is packaged in an approved disposal container for nonretrievable disposal in designated radioactive solid waste burial grounds. Nonradioactive waste is packaged for disposal in the Hanford Site Central Landfill. Low-level liquid waste is not solidified at B Plant. Currently, no capability or practice of incineration exists for disposal of either radioactive or nonradioactive B Plant solid wastes. A very small portion of the nonradioactive solid waste volume is shipped offsite for reclamation, recycle, or specialized disposal.

### 7.3.1 Failed Equipment

As discussed in Chapter 5.0, the B Plant chemical separations processes rely on use of various concentrators, vessels, jumpers, ion exchange columns, etc., which are placed in the canyon cells remotely using the canyon overhead crane. Following use, these relatively large components are highly radioactive and contaminated and thus are not always subject to contact maintenance or repair in the event of failure. Failed equipment of this nature is one source of radioactive waste generated by B Plant for 200 Area low-level waste burial ground disposal.

7.3.1.1 Description of Failed Equipment. Virtually all of the equipment and components installed in the canyon cells (as described in Chapter 5.0) are potentially subject to enter this waste category. Where practicable, components are designed in modules which are remotely handled such that waste is reduced and module replacement avoids replacement of the entire assembly. As an example, the tube bundle sections of the E-23-3 Concentrator can be replaced without replacement of the entire concentrator vessel. Examples of failed equipment which currently remain in storage in the 221-B Facility during preparations for disposal are: a Cell 20 Concentrator which failed in April 1982, and is stored in Cell 2, (awaiting a large burial box); and two Cell 18 ion exchange columns in which resin retention screens have failed (awaiting dunnage removal).

7.3.1.2 Packaging and Transport of Failed Equipment. Large radioactive waste items from the canyon are packaged in burial boxes of precast, reinforced, concrete slabs with a concrete slab lid held in place by its own weight. A steel liner box may be inserted, depending on the nature of the waste to be packaged. Box configurations vary, depending on the waste being packaged, but the most commonly used size has a void volume of about 50 $m^3$. All such packages must have supporting Safety Analysis Reports for Packaging (SARP), documented prior to use, for shipping.

The burial boxes enter the facility by railroad flatcar or truck via the railroad tunnel access to the canyon. Failed equipment to be discarded is thoroughly flushed of contamination and is loaded remotely using the canyon crane. Efficient utilization of the full container void space is attempted where such loading is not precluded by radiological conditions of handling or transport. Absorbent materials are placed in burial boxes in advance of component loading where residual liquid may be present. Transport to the burial grounds may be either by rail or by truck, depending on radiological conditions and weight limitations.

Transportation to the burial grounds is subject to strict procedur-alized limitations on route, weather conditions, escort and placarding requirements, etc.

### 7.3.2 Trash

Segregation of radioactive from nonradioactive waste is accomplished administratively at the point of waste generation, and maintained thereafter. All wastes generated within radiologically controlled areas are surveyed by Radiation Monitoring personnel to establish waste classification or assumed radioactively contaminated if physical survey is precluded by waste form or other reason. Dumpsters designated for nonradioactive waste are periodically surveyed to "spot check" contamination control measures in this regard. Strict packaging and labeling requirements for radioactive waste function, in part, to prevent its accidental incorporation in nonradioactive disposal systems.

7.3.2.1 Nonradioactive Trash. The majority of the nonradioactive solid waste material is typical of any industrially generated trash. Solid nonradioactive wastes are collected in trash cans, plastic bags, cardboard boxes, etc., which are emptied into dumpsters. The waste is compacted to about one-third the original volume by the trash truck which delivers the waste to the Central Landfill.

7.3.2.2 Radioactive Trash. The bulk of the radioactive trash consists of cloth, plastics, paper, tape, and protective equipment utilized in decontamination and similar contamination control measures in the plant. Smaller failed equipment items, spent filters, and contaminated tools are also included in this waste stream.

Radioactive solid wastes of small bulk are collected in fiberboard boxes or drums for disposal at the 200 Areas radioactive waste burial grounds. Fiberboard boxes are restricted to a maximum gross weight of 29 kg. Drums (55 gal) which are used for packaging, shipment, and disposal of solid, low-level radioactive waste meet the requirements of the U.S. Department of Transportation (DOT) (Ref. 7-28). Drums are labeled in accordance with Rockwell requirements documented in, "Hanford Radioactive Solid Waste Packaging, Storage, and Disposal Requirements" (Ref. 7-29).

## 7.4 SPECIALIZED WASTE AND RECOVERABLE ITEMS

### 7.4.1 Recoverable Equipment and Tools

Where practicable, from an economic and radiologic standpoint, failed equipment and contaminated or failed tools may be decontaminated and recovered for use to avoid disposal as radioactive solid waste. This activity may involve some trade-offs in that liquid and solid wastes are also generated during decontamination. Decontamination of large scale equipment

is accomplished by transferring the contaminated equipment to the 221-T Facility in the 200 West Area. Transport of such recoverable materials is handled similarly to failed equipment disposal except that containment techniques may differ.

The 221-T Facility in the 200 West Area is a structure (very similar to 221-B) which has been adapted to large scale decontamination and maintenance activities in support of failed equipment recovery, maintenance procedure mock-up testing, etc. Safety Analysis Report documentation of activities conducted at 221-T is provided by References 7-30.

### 7.4.2 Contaminated Laundry

Used protective equipment including anticontamination clothing, shoe covers, respirators of various kinds and certain types of gloves are controlled as radioactive materials, laundered for decontamination and returned to service.

Laundry bags are maintained within radiologically controlled areas, monitored for external contamination and dose rate prior to shipment, and transported in an enclosed vehicle with appropriate placarding and Radioactive Shipment Record documentation. Safety analysis of the laundry facilities operations are outside the scope of this document. (see Reference 7-4.)

### 7.4.3 Wastes Subject to Specialized Disposal

Asbestos is present in small amounts of the B Plant solid waste streams. This material is contained in much of the original insulation installed on steam lines and similar plant systems. When such pipe lagging is removed for maintenance activities, it becomes waste. (Replacement lagging material is a non-asbestos fiber insulation.) Contaminated insulation waste is treated in the same manner as other radioactive solid waste. Nonradioactive insulation waste is segregated from other no-asbestos-contaminated solid wastes, packaged in at least 6 mil plastic, tape-sealed, labeled as "Asbestos Containing" and transported to a separate, dedicated trench within the Central Landfill.

Small amounts of other B Plant generated nonradioactive wastes are routed offsite for specialized disposal or reclamation. These include various excess chemicals, primarily liquid organics such as carbon tetrachloride and trichloroethane. Additionally, all polychlorinated biphenyl (PCB) contaminated electrical equipment, (typically capacitors and transformers) is sent offsite to an EPA approved disposal contractor.

### 7.4.4 Waste Encapsulation and Storage Facility Waste Drums

Currently, B Plant provides lag storage and readies WESF waste for transportation and disposal at the radioactive low-level waste burial grounds. Drums of waste generated within WESF cells are transported individually by a reusable truck-cask from WESF truck port to the B Plant Canyon via the railroad tunnel. Drums which are generated at the rate of about two per week, and which may exceed 100 R/h on contact, are stored in Cell 4 of the canyon. Accumulated drums are gradually relocated remotely by canyon crane into burial boxes for railroad transport and pull-off burial. Environmental hazards are minimized as in other radioactive waste shipment operations, by quality assurance and nondestructive testing of containment, transportation and lifting equipment.

## 7.5 REFERENCES


7-1. RHO-HS-SR-83-1 P, July 1984, Rockwell Hanford Operations Effluents and Solid Waste Burials During Calendar Year 1983, T. M. Tanner, et al., Rockwell Hanford Operations, Richland, Washington.

7-2. SD-463-ES-001, May 1983, Engineering Study B Plant F Filter, J. H. Hummer, Rockwell Hanford Operations, Richland, Washington.

7-3. RHO-MA-139, March 1983, Environmental Protection Manual, J. V. Panesko, et al., Rockwell Hanford Operations, Richland, Washington.

7-4. RHO-CD-457, June 1980, General Safety Assessment Document for Rockwell Managed Nonreactor Nuclear Facilities, Safety Analysis Group Staff, Rockwell Hanford Operations, Richland, Washington.

7-5. ERDA 76-21, March 1976, Nuclear Air Cleaning Handbook, C. A. Burchsted, A. B. Fuller, J. E. Kahn, Energy Research and Development Administration (NTIS), Springfield, Virginia.

7-6. SD-432-CDR-001, September 1982, Conceptual Design Report Exhaust Stack Upgrade, B Plant Project B-432, R. G. Wood, Kaiser Engineers Hanford, Richland, Washington.

7-7. ANSI N13.1-1969, 1969 (REV 1982), American National Standard - Sampling Airborne Radioactive Materials in Nuclear Facilities, Guide to, American National Standards Institute, New York, New York.

7-8. Experimental Evaluation of the Gaseous Effluent Sampling System at the 291-B-1 Stack Waste Fractionization Facility, J. A. Glissmeyer, L. C. Schwendiman, Pacific Northwest Laboratories, Richland, Washington, November 1976 (Unpublished).

7-9. RHO-CD-1102, January 1981, Rockwell In-Place HEPA Filter Test System, R. L. Herman, Rockwell Hanford Operations, Richland, Washington.

7-10. DOE/EV/1830-T5, April 1980, A Guide to Reducing Radiation Exposure to As Low As Reasonably Achievable (ALARA), R. L. Kathren, et al., U.S. Department of Energy, Washington, D.C.

7-11. RHO-MA-220, February 1983, Radiological Standards and Operational Controls, Radiological Engineering Group, Rockwell Hanford Operations, Richland, Washington.

7-12. ANSI N101.3-1979, 1979, American National Standard - Nuclear Fuel Reprocessing Failities, Guide to Principal Design Criteria, American National Standards Institute, New York, New York.

7-13. RHO-F-14, September 1980, Caustic Strike Flowsheet for Final Purification of B Plant Strontium Solutions, G. W. Lohman, W. E. Poling, Rockwell Hanford Operations, Richland, Washington.

7-14. RHO-CD-667, August 1979, Analysis and Assessment of 200 Area Stack Sampler-Monitor Systems, E. H. Carbaugh, et al., Rockwell Hanford Operations, Richland, Washington.

7-15. "Threshold Limit Values for Chemical Substances and Physical Agents in the Workroom Environment," American Conference of Governmental Industrial Hygienists, (1984 Edition) Cincinnati, Ohio.

7-16. DOE 5484.1, February 24, 1981, Environmental Protection; Safety and Health Protection Information Reporting Requirements, U.S. Department of Energy, Washington, D.C.

7-17. SD-WM-ER-001, March 1982, 200 Area Final Gaseous Effluent Treatment Systems Assessment, J. W. Cammann, K. J. Moss, Rockwell Hanford Operations, Richland, Washington.

7-18. RHO-CD-1092, November 1980, 200 Area Stack Sampler - Monitor Systems Upgrade: Generic System Applications, J. W. Cammann, C. J. Geier, Rockwell Hanford Operations, Richland, Washington.

7-19. RHO-HS-SR-83-10-4Q P, March 14, 1984, Liquid Waste Discharged to Ground in the 200 Areas Through 4th Quarter 1983 - Nonradiological Parameters, R. C. Aldrich, Rockwell Hanford Operations, Richland, Washington.

7-20. ARH-CD-673, April 1969, Handbook - 200 Area Waste Sites, H. L. Maxfield, Rockwell Hanford Operations, Richland, Washington.

7-21. RHO-CD-798, December 1979, Current Status of 200 Area Ponds, C. C. Meinhardt, J. C. Frostenson, Rockwell Hanford Operations, Richland, Washington.

7-22. Letter No. 65430-83-284, September 29, 1983, R. M. Smith to W. F. Heine, "Completion of Milestone - WA61B/216-B-62 Crib Characterization," Rockwell Hanford Operations, Richland, Washington.

7-23. RHO-HS-EV-18, March 1983, Servicability of Cribs Affected by PUREX Startup, R. M. Smith, R. B. Kasper, Rockwell Hanford Operations, Richland, Washington.

7-24. RHO-HS-MA-2, July 1982, Environmental Surveillance and Control Manual, A. W. Conklin, et al., Rockwell Hanford Operations, Richland, Washington.

7-25. 40 CFR 260-265, May 1983, Environmental Protection Agency General Regulations for Hazardous Waste Management, Environmental Protection Agency, Washington, D.C.

7-26. WAC-173-303, May 1982, Dangerous Waste Regulations, Washington State Department of Ecology, Olympia, Washington.

7-27. RHO-CD-1105-FDC Rev. 1, July 1981, Functional Design Criteria - Chemical Sewer Upgrade - B Plant Project B-354, Research and Engineering, Rockwell Hanford Operations, Richland, Washington.

7-28. 49 CFR 178.118, 1978, "Specification 17 H, Steel Drums," Environmental Protection Agency, Washington, D.C.

7-29. RHO-MA-222, 1984, Hanford Radioactive Solid Waste Packaging, Storage, and Disposal Requirements, D. L. McCall, Rockwell Hanford Operations, Richland, Washington.

7-30. SD-CP-SAR-007 (REV 1), January 1985, T Plant Safety Analysis Report, J. P. Hinckley, Rockwell Hanford Operations, Richland, Washington.

9312892231

THIS PAGE LEFT BLANK INTENTIONALLY.

# 8.0 HEALTH PROTECTION

This chapter describes the Rockwell Hanford Operations (Rockwell) Safety Program which encompasses radiation protection, environmental protection (see Section 7), and industrial hygiene and safety. An important element of this program is minimizing the exposure of individuals and the environment to radiation and hazardous materials while considering all potentially significant sources.

## 8.1 INTRODUCTION

In support of health/radiation protection, Rockwell management has developed a policy (Ref. 8-1) which ensures that occupational and population exposures from Rockwell activities will be maintained as low as reasonably achievable (ALARA). This policy is implemented by an ALARA program (Ref. 8-2) which covers all phases of plant activities:

- Plant design
- Operating techniques and procedures
- Radiation surveillance and control programs
- Training
- Decontamination and decommissioning
- Emergency warning and response procedures and training.

The ALARA program is implemented in accordance with the United States Department of Energy (DOE) Orders and Manual Chapters:

- DOE Order 5480.1A, Chapter XI, "Requirements for Radiation Protection" (Ref. 8-3)
- DOE Order 5484.1, Chapter I, "Notification of Occurrences" (Ref. 8-4)
- DOE Order 5484.1, Chapter II, "Investigation Requirements" (Ref. 8-5)
- DOE Order 5484.1, Chapter III, "Effluent and Environmental Monitoring Program Requirements" (Ref. 8-6)

Additional guidance is provided in Reference 8-7.

The ALARA Program requires that a Facility ALARA Plan (FAP) for each facility be formalized and improved to meet the requirements of the ALARA concept. Under this program, each operating facility which could potentially expose personnel to radiation establishes annual ALARA reduction goals. The B Plant ALARA plan states these annual goals (Ref. 8-8).

## 8.2 SAFETY MANAGEMENT AND ORGANIZATION

This section provides a brief description of the responsibilities of Rockwell organizations and personnel which contribute to the Rockwell Safety Program. The organizational structure is shown in Figure 8-1. Although this structure is current at the time of SAR preparation, and is subject to change, such change will not affect the safety aspects of this SAR. Any organizational changes will be incorporated in future revisions.

### 8.2.1 Safety and Quality Assurance (S&QA) Function

The S&QA Function is responsible for supplying technical assistance and advice to management in matters concerning the Rockwell Safety and Quality Assurance Programs and for developing and interpreting Rockwell Safety and Quality Assurance Policies. To accomplish this task, S&QA interprets applicable requirements for federal, state, and local governments. The results are published in safety and quality assurance manuals containing criteria, standards, guidelines, procedures, and descriptions of specific programs. The S&QA function is comprised of four departments reporting to the Director of Safety and Quality Assurance. The Director, S&QA, supervises and directs all Rockwell safety programs and reports to the Vice President and General Manager.

8.2.1.1 Radiological Protection Department. The Radiological Protection Department is responsible for implementing the radiological safety program for Rockwell. The Manager, Radiological Protection, reports to the Director, S&QA Function, and is responsible for the administration of all the 200 Areas Radiation Safety Programs, which include health physics, and radiation monitoring and criteria. The Radiological Protection Department also coordinates operating procedure reviews and Health Physics Procedures (HPP), and approves Unusual Occurrence reports, as well as oversees the ALARA Program for the S&QA Function. The Radiological Protection Department encompasses the Radiological Engineering and Effluent Controls Groups (East and West Areas) and the Radiation Monitoring Groups (East and West Areas).

8.2.1.2 Radiological Engineering and Effluent Controls (RE&EC) Groups. The RE&EC Groups provide expertise in the areas of health physics, dosimetry, engineering controls, environmental surveillance, facility effluent controls, and administrative controls. The Managers, RE&EC Groups, supervise a staff of radiological engineers, specialists, technicians, and clerks that are divided into two facility support groups (East and West Area) and a dosimetry team. The Managers, RE&EC, report directly to the Manager, Radiological Protection Department. The responsibility of RE&EC Groups is to provide radiological guidance for all operations in the 200 Areas and include the following:

- Provide cognizant radiological engineers for operating facilities
- Provide health physics support



9 3 1 2 8 9 9 2 2 3 4

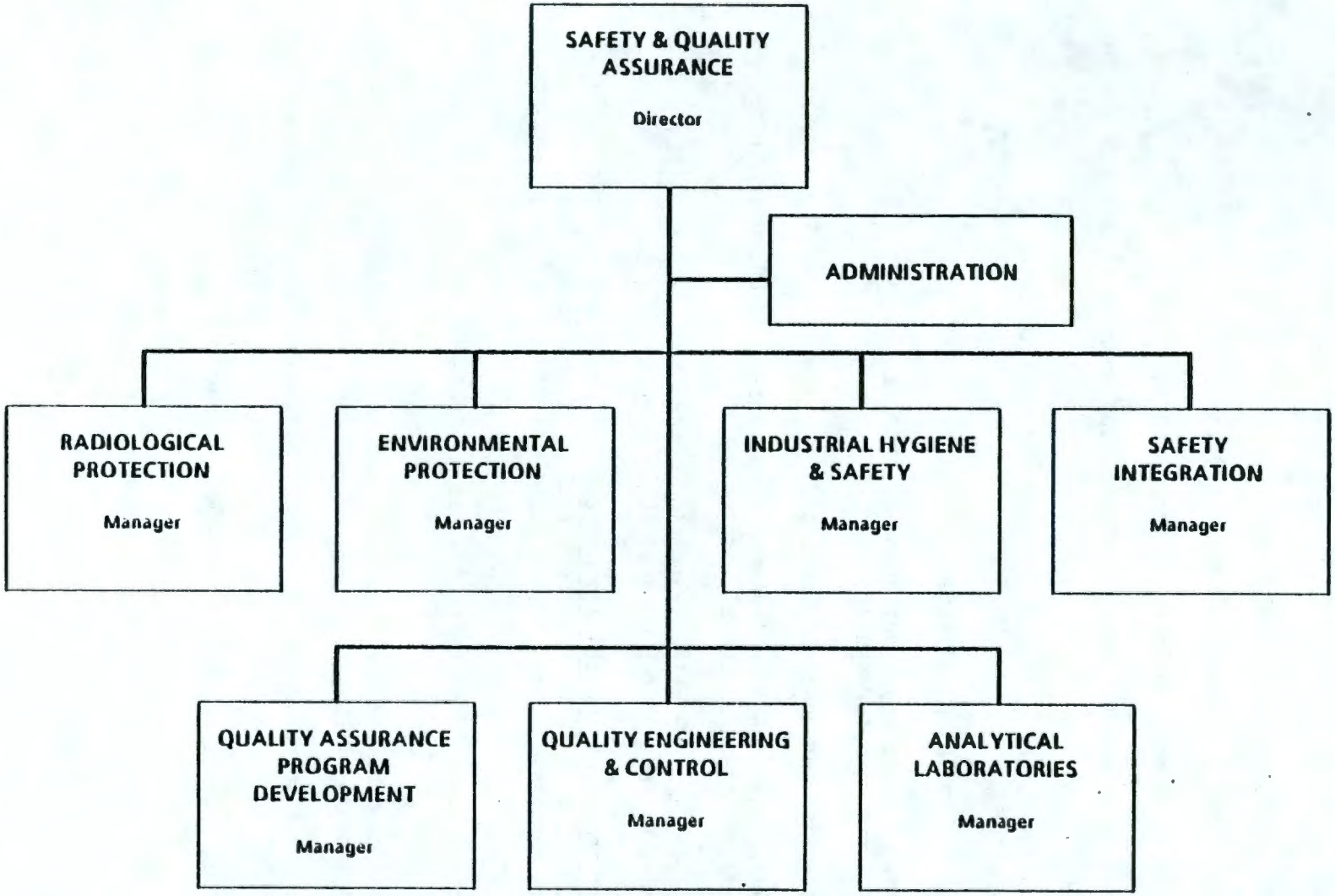


PS84-3225-2

FIGURE 8-1. Organizational Chart.

- Provide health physics reviews of process and operational changes and modifications
- Assist and participate in formal investigations
- Assist in emergency planning
- Administer the personnel dosimetry program
- Prepare reports to Rockwell management and DOE
- Provide technical bases, criteria, and methods related to health physics
- Provide radiological information services to other groups in the company
- Provide radiological safety training
- Provide necessary input prior to approval to exceed Rockwell personnel exposure guidelines
- Establish personnel bioassay and in-vivo counting schedules
- Audit radiation practices for compliance with DOE operational requirements and Rockwell criteria
- Develop new radiation protection programs or change existing programs as part of the general ALARA Program.

8.2.1.3 Cognizant Radiological Engineers. The cognizant radiological engineer assigned to B Plant reports directly to the RE&EC, East Area Unit Manager. The responsibilities of the radiological engineer assigned to B Plant are to:

- Act, in case of an emergency, as a member of the Emergency Response Team for the facility
- Provide complete health physics support to operations and program management as required
- Ensure integration of the ALARA program into the everyday work situation
- Provide input to the Facility ALARA Team and Facility ALARA Program
- Coordinate with the program manager for B Plant.

8.2.1.4 Radiation Monitoring (RM) East Group. The RM East Group provides radiation monitoring services to all operations involving radioactive

materials and equipment. The Manager, RM East Group, supervises all radiation monitoring activities at Rockwell and reports directly to the Manager, Radiological Protection Department. The Manager, RM East Group, directs a staff of Unit Managers, Radiation Protection Technologists (RPTs), and other technical and support personnel. It is the responsibility of the RM Groups to:

- Administer the radiation monitoring program, which includes plant surveillance, and direct the activities of the Radiation Monitoring Unit Managers
- Implement a Radiation Protection Program in accordance with criteria provided by the RE&EC Group. The Radiation Protection Program includes air sampling/monitoring, radiation and contamination control/surveys, stack sampling, monitoring personnel dosimetry, and radiological documentation
- Implement and administer Rockwell's respiratory protection program in accordance with DOE Orders, federal and state codes, and Rockwell requirements
- Provide health physics reviews of proposed operational changes and modifications
- Prepare radiation work permits
- Assist in preparation of reports to Rockwell management and DOE.

8.2.1.5 Radiation Monitoring, Fission Products Unit. The day-to-day radiation health and safety services at B Plant are provided by Radiation Monitoring, Fission Products Unit. The Unit Manager, whose responsibility also includes WESF, supervises a staff of RPTs and reports to the Manager, East Area RM Group. At B Plant, RPTs are assigned to both day shift and rotating shifts (24 h coverage) on a permanent basis. Additional RPT coverage is available from other facilities as the need arises.

8.2.1.6 Environmental Protection Department. The Environmental Protection Department is responsible for work required to evaluate and protect the environment in areas for which Rockwell has responsibility. This Department is divided into four groups:

- Environmental Surveillance
- Environmental Regulation
- Tank Farm Surveillance and Analysis.

This department provides expertise in hydrology, biology, in-field radiological analysis, evaluation of environmental data, establishment of criteria and standards necessary to protect the environment. It also prepares and coordinates environmental documents, including environmental impact statements.

8.2.1.7 Industrial Hygiene and Safety Department. The Industrial Hygiene and Safety (IH&S) Department has the administrative responsibility for four major areas of the Rockwell Safety Program.

- Industrial Hygiene.
- General and Industrial Safety.
- Hazardous, non-radiological waste
- Fire Protection Engineering Services.

This department provides technical service support and assistance to line management in complying with nonradiological requirements of the safety Program, which includes:

- Operational appraisals
- Facility inspections
- Hazardous waste materials control and disposal
- Design and procedure review
- Liaison with other onsite DOE Contractors and customers
- Consultations
- Interpretation of regulations
- Statistical analysis of accidents
- Accident investigation/reporting
- Recordkeeping.

8.2.1.8 Safety Integration Department. The Safety Integration Department consists of four groups:

- The two Safety Analysis Groups are responsible for identifying and analyzing safety hazards of nonreactor nuclear facilities and operations, and determining the need for safety analyses. If an analysis is required, these groups coordinate the analysis, including input by others, and prepare reports to satisfy the requirements of DOE Orders 5480.1A, 5481.1A, 6430.1, and their RL Supplements
- Criticality Engineering and Analysis provides expertise in criticality safety, analysis, controls, and specifications



9 3 1 2 8 9 9 2 2 3 8

- Safety Coordination Group: The Safety Coordination Group provides coordination of all safety reviews, design media, and other documents prepared within the S&QA Function. The Group provides a member for the Design Review Board on formal reviews, and a single point of contact within S&QA on safety matters.

### 8.2.2 Safety Committees

8.2.2.1 Executive Safety Committee. The Executive Safety Committee provides top-level management support and guidance by approving safety policies, goals, and objectives; it also evaluates safety performance. Membership includes the Vice President and General Manager (Chairman), the Director of S&QA (Secretary), Functional Directors, and key Program Directors. Department Managers within the Safety and Quality Assurance Function, and the Chairman of the Accident Prevention Council serve as advisors to the committee.

8.2.2.2 Safety Review Committees. The safety review committees were established to implement part of the Safety Review Program. These committees, composed of senior staff personnel and technical experts, provide independent review of all SARs. Safety review committees operate as described in Reference 8-1.

### 8.2.3 Communications and Manuals

Radiochemical processing has been performed at Hanford for over 40 yr. This long experience has resulted in detailed, written radiation work procedures and protection standards that comply with the guidelines of Reference 2 for maintaining exposures ALARA. The procedures and standards are documented in the following manuals.

- Environmental Protection Manual (Ref. 8-9)--details the standards for controlling the release of radioactive and nonradioactive materials into the air, water, and soils; the environmental surveillance program; and the effluent sampling and monitoring program.

- Radiation Monitoring Manual of Standard Practices (Ref. 8-10)--documents standard practices for obtaining radiological information, personnel decontamination, and preparation of written documentation to maintain a sound uniform radiation control program.

- Radiation Work Permits (Ref. 8-11)--implements regulations and practices for radiological protection during various phases of work in radiation areas. Radiation work permits for B Plant are contained in this manual.

In addition to the preceding manuals, constant updating of existing procedures is conducted and new procedures are initiated when necessary. These procedures are known as standard operating procedures (SOP), plant operating procedures (POP), and job performance aids (JPA); they are developed to assure that the operators can complete all assignments concerned with the processing, collection, containment, storage, and transport of radioactive materials without undue risks of personnel exposure or release of contaminants to the environment. The Operating Documents Group in the Research and Engineering Function keeps the SOP, POP, and JPA up to date.

### 8.2.4 Audits and Inspections

Audits are performed jointly by auditing groups in Rockwell to provide management with a comprehensive evaluation of facilities. The auditing organizations at Rockwell are:

- Internal Audit (IA)
- Safety and Quality Assurance (S&QA)
- Personnel and Public Relations (Training)
- Safeguards and Security (SS).

Joint audits are established at the direction of the Joint Audit Committee composed of a representative of each auditing organization in accordance with RHO-MA-IOO (Ref. 8-1).

In addition to the joint audits, each functional organization is required to perform inspections of Rockwell facilities on a regular basis. Inspections informally provide management information on the current facility and operational safety conditions and the effect of these conditions on personnel and the environment. Types of inspections include:

- Industrial Safety Walk-through
- Fire Surveys
- Management Assistance Program
- Radiological
- Effluent
- Production Operations
- ALARA

- Facility Housekeeping
- Vehicle Safety.

Managers are encouraged to develop their own inspection programs.

### 8.2.5 Design and Document Safety Review

The Design and Document Safety Review system was established by S&QA and is coordinated by the Safety Coordination Team. The safety reviews within this system are conducted to assure that adequate considerations are given to safety, health, and environmental issues during the siting, design, construction, operation, maintenance, modification, deactivation, decontamination, and decommissioning of Rockwell operated facilities.

Reviews are required of all documents, drawings, facility operating specifications, and other media related to the safety of activities, with the exception of operating procedures and other documents specified in the Engineering Procedure Manual (Ref. 8-16).

## 8.3 TRAINING

### 8.3.1 General

Rockwell managers are responsible for the training of their employees in safe work practices, for controlling the hazards involved in their jobs, and for incorporating required safety topics/training into New Employee Orientation, and other training courses conducted under their cognizance (Ref. 8-13).

The IH&S Department is responsible for periodic issuance of general and special meeting topics and additional materials to managers for use in general safety meetings. Presentation of this material does not relieve managers of the responsibility for conducting such additional meetings as may be necessary to ensure that employees have adequate information pertaining to specific job procedures and job hazards.

The IH&S Department is responsible for the identification of special DOE industrial safety training requirements and for the dissemination of safety training materials and/or information on affected organizations to ensure compliance with such requirements.

8.3.2 B Plant Personnel

All personnel assigned to or performing work in B Plant complete all required safety training as designated by their manager. Managers of employees who are exposed to potential radiation hazards (radiation workers) identify and document specific radiological training/retraining needs of each employee. Training requirements for all radiation workers are:

- New Employee Orientation
- Radiation Safety Training
- Facility Orientation
- Respirator Fit/Use.

Radiation workers requalify in each of the above, except for New Employee Orientation, every two years. Radiation Monitoring, Fission Products Unit, is responsible for providing facility orientation for all employees assigned to or performing work in B Plant.

In addition to the above, responsible managers provide and document appropriate job-specific training for radiation workers as they are assigned to physically handle radioactive materials or directly supervise the handling of radioactive materials (Ref. 8-12).

8.3.2.1 B Plant Operating Personnel. Rockwell has adopted a three-phase training program for radiochemical operating personnel. The three courses of study are General Radiochemical Operation, Plant Specific, and Job Specific training. The General Radiochemical Operation phase of this program includes training for B Plant operators, in addition to that mentioned above, in the following areas:

- Introduction to Radiation
- Radiation Detection Instrumentation
- Exposure control
- Self-Survey/Self-Monitoring
- Dosimetry
- Airborne Activity
- Radiation Safety Symbols
- Radiation and Contamination Control
- Radiation Work Permits
- Decontamination Techniques.

This first phase of training provides the most in-depth training the new operator will receive on radiation safety. The course outline is contained in Reference 8-15.

The Plant Specific training phase of this program is concerned with operators assigned to the B Plant facility. It is designed to familiarize the operator with radiological conditions and control measures specific to B Plant. The areas covered are:

- Administrative Contamination Control
- Contamination Control (Design Features)
- Facility Radiation Work Permits
- Liquid and Gaseous Discharge Sampling
- Limits for Environmental Releases.

Job specific training is based on each task performed at B Plant having an individual certification package developed to familiarize the new operator with the hazards which potentially may occur during the operation. Early indicators of potentially hazardous conditions and corrective measures to eliminate them are covered for the various processes. Contamination control practices are also reviewed for the routine tasks.

Each of the three phases of this training program has a test which is administered at the completion of the study courses. A test result of 70% or higher is required for successful completion of each course. A two-year requalification examination for each phase of training is required to assure that a qualified staff is being maintained. The trainer discusses all incorrect answers with examinees.

8.3.2.2 Radiation Monitoring Personnel - B Plant. Rockwell has established a Radiation Protection Technologist certification program which requires newly hired RPT personnel to qualify in each of various progression steps:

- Radiation Protection trainee
- Junior Radiation Protection Technologist (JRPT)
- Radiation Protection Technologist (RPT)
- Senior Radiation Protection Technologist (SRPT).

Before advancing through the steps, each employee must successfully complete the training curriculum required in his present job classification and have a current evaluation prepared by the Unit Manager and approved by the Group Manager (Ref. 8-14).

## 8.4 HEALTH PHYSICS PROGRAM

### 8.4.1 Personnel Dose Assessment - Dosimetry

The DOE regulatory limits for occupational exposure are given in Table 8-1. Additional information on the occupational dose limits and guidelines can be found in References 8-3 and 8-12.

Rockwell has established more conservative occupational dose guidelines to ensure that the DOE regulatory limits are not exceeded. These are presented in Table 8-2. Special approvals are required for a worker to exceed the Rockwell occupational dose guidelines of Table 8-2. Each approval must be in the form of a memorandum from the cognizant manager to the manager of Radiological Protection or his designee. It must state the increase to be authorized, best-dose estimate of work to be done, and the basis for authorizing the increase, including specific measures to ensure that the accumulated dose is ALARA. Approving management must obtain the concurring signature of the Manager of Radiological Protection on this memorandum before allowing guidelines to be exceeded.

The Radiological Engineering and Effluent Controls Group maintains the radiation dosimetry program applicable to all Rockwell personnel and visitors. The dosimetry program includes external and internal dosimetry and provisions for refined employee dose estimation in the event of a nuclear accident (Ref. 8-12). The total occupational dose includes external dose and dose contributed by radionuclides deposited in the body as a consequence of work with radioactive materials. Natural background radiation, diagnostic and therapeutic exposure for medical purposes, and internal dose from naturally occurring radionuclides is not included.

8.4.1.1 External Dosimetry. The Hanford Multipurpose Thermoluminescent Dosimeter (TLD) and the Hanford Basic TLD are the principal devices for measuring personnel radiation doses in Rockwell facilities. Except as discussed in Reference 8-12, dose values determined by processing dosimeters are used as the legal record of dose received.

Personnel who have qualified as radiation workers and have the potential to exceed 500 mrem/yr are assigned a multipurpose TLD. The RE&EC Group and the individual's immediate supervisor or manager determine the appropriate exchange frequency of the TLD. There are two exchange periods for the multipurpose TLD, monthly or quarterly. Personnel who are not qualified radiation workers or are not expected to exceed 500 mrem/yr are issued a Basic TLD. The Basic TLD is exchanged on a yearly basis.

Extremity dosimeters (e.g., finger rings) must be worn if the anticipated monthly extremity (e.g., hands) exposure could exceed one rem or where dose rates to the extremities may exceed five times the whole body exposure. In specific cases where an employee may be subject to radiation

TABLE 8-1. DOE Occupational Dose Equivalent Limits (rem).[a]

| Type of exposure | Annual | Calendar quarter |
|---|---|---|
| Whole body, head and trunk, gonads lens of the eye, red bone marrow, active blood-forming organs | 5 | 3 |
| Unlimited areas of the skin (except hands and forearms).[b] Other organs, tissues, and organ systems (except bone) | 15 | 5 |
| Bone, forearms | 30 | 10 |
| Hands, feet | 75 | 25 |

[a]Reference DOE Order 5480.1, Chapter XI.

[b]All reasonable effort shall be made to keep exposures to forearms and hands to the general limit for the skin.

TABLE 8-2. Rockwell Occupational Dose Guidelines (rems).

| Type of exposure | Annual | Quarter | Week |
|---|---|---|---|
| Whole body, head and trunk, gonads, lens of eye, red bone marrow, blood-forming organs | 3 | 1.25 | 0.3 |
| Skin (except hands and forearms) | 9 | 3 | 0.9[a] |
| Other organs (except bone) | 7.5 | | |
| Bone | 15 | | |
| Forearms | 15 | 5[b] | |
| Hands | 15 | 5 | 1.5[c] |
| Feet | 15 | 5 | 1.5[b] |

[a]As measured by: (a) the "unfiltered" chip in the record TLD, (b) an "unfiltered" supplementary TLD, or (c) timekeeping with open window CP.

[b]As measured by a closed window CP and timekeeping or a supplemental TLD.

[c]As measured by: (a) finger ring worn with TLD chip oriented toward the source, or (b) an open window CP and timekeeping.

sources which will expose specific portions of the body to substantially higher doses than the whole body exposure, supplementary dosimeters may be required by Radiation Monitoring and RE&EC. These dosimeters must be worn at the point(s) of highest dose rates as determined by Radiation Monitoring.

If a dosimeter is lost or a dose measurement is proven erroneous, an estimate of the dose received by the individual during the period in question shall be established by RE&EC and documented as a part of the employee's dose record. Criteria to be used to establish the dose estimate can be found in Reference 8-12.

8.4.1.2 Internal Dosimetry. Rockwell has developed two programs, routine bioassay and in-vivo counting, for internal dose measurements. The programs are directed toward determining whether employees have experienced an uptake of radioactive materials as a consequence of their employment at Rockwell and the magnitude of any related dose to internal organs.

Employees hired by Rockwell who have previously been employed in a field where they have directly worked with unsealed radioactive materials will be asked to undergo a baseline bioassay to determine if they have any internal deposition at the time of employment. After completing the baseline bioassay, personnel who work routinely with radioactive material must have annual internal dosimetry evaluation, or with a frequency deemed necessary by RE&EC. The program for bioassay dose measurement will include the analysis of samples or urine and possibly feces and/or blood. The in-vivo counting program includes the use of whole body, chest and wound counts. All personnel who work with radioactive materials will be subject to whole body counting on a frequency determined by RE&EC. An investigation will be initiated for a positive whole body count in excess of one percent of the maximum permissible body burden (MPBB) for a radionuclide detected using in-vivo analysis techniques.

8.4.2 Exposure Control - B Plant

Per the B Plant Facility ALARA Plan, all tasks, where the estimated total crew exposure will exceed 500 mrem, shall be reviewed by the B Plant ALARA Team to investigate the possibilities and feasibility of modifying procedures, techniques, and equipment to determine if changes can be made that will reduce exposure.

In addition to the ALARA Team review, all nonroutine tasks which have the potential for high exposure rates or contamination levels are reviewed in pre-job planning meetings. During these meetings, the hazards anticipated are discussed further with personnel assigned to perform the task. The input received from these meetings is an integral part of keeping exposure and contamination levels ALARA.

8.4.2.1 Timekeeping. Timekeeping is most commonly used during specific tasks where the exposure during job duration could possibly exceed Rockwell's limits for exposure control, Table 8-2. All B Plant operators are instructed on the method of timekeeping used by all Rockwell facilities during their General Radiochemical Operating Training (Ref. 8-15). B Plant operating personnel are the only qualified timekeepers located at the facility.

8.4.2.2 Supplementary Dosimetry. There are four types of supplementary dosimetry used at B Plant: pencil dosimeters, pocket alarm dose integrators (PADI), finger ring dosimeters, and supplemental TLDs.

The pencil dosimeter is a direct reading pencil shaped instrument which normally responds only to gamma or X-ray radiation and usually will not detect alpha or beta radiation. When the pencil dosimeter is used in conjunction with timekeeping for exposure control, the indicated accumulated exposure will normally be lower than the timekeeping estimate due to its inability to detect beta radiation. Pencil dosimeters are issued through the Radiation Monitoring office in B Plant.

The PADI, also sensitive only to gamma and X-ray radiation, is designed to be worn by personnel while they are performing their assigned tasks in radiation areas. The PADI is used to alert personnel by an audible alarm when they have reached a pre-set radiation dose. The PADIs are issued, read, set, and distributed by the B Plant Radiation Monitoring personnel.

The finger ring dosimeters are issued by Radiation Monitoring to personnel who are not regularly assigned finger ring dosimeters. These dosimeters are used to measure extremity dose to the hands of personnel whose hand exposure is expected to be considerably higher than the whole body exposure for the specific task to be performed.

In cases where the source of radiation is located unfavorably with respect to the multipurpose TLD or, where the employee-accumulated dose for specific task needs to be immediately evaluated, supplementary TLDs will be assigned. Use of the above mentioned supplementary dosimeters must always be accompanied by a regularly assigned multipurpose TLD. Under no circumstances is a supplemental dosimeter to be worn in place of a multipurpose TLD.

8.4.2.3 Shielding. Use of shielding is another method used at B Plant to reduce radiation exposure to levels that are ALARA. Portable shielding is available in various sizes, shapes, and material densities suitable for a numerous variety of situations and isotopes. Lead sheets, lead blankets, and rubber matting are the most commonly used portable shielding materials in use at B Plant. The physical requirements and restrictions imposed by the additional shielding, along with the additional time the shielding might add to the task, must be evaluated before material selection. If the shielding to be used will jeopardize the safe completion of task, an alternate method of exposure reduction will be implemented.

### 8.4.3 Protective Equipment

Radiation Monitoring will prescribe protective equipment requirements for tasks performed at B Plant, including minimum clothing and respiratory protection according to radiological conditions and hazards. Protective apparel and respirators are available at B Plant. Full-face, mechanical filter respirators are used for routine maintenance and operational tasks in which airborne contaminants may be encountered. Although the majority of the full-face respirators are stored in the B Plant SWP lobby, individual respirators are located in strategic areas throughout the plant to be used in emergency situations. The filters on these respirators are tested by the Hanford Environmental Health Foundation (HEHF) upon initial receipt and are checked again when the respirators are sent to the mask cleaning station located in the 200 West Area. Five Self Contained Breathing Apparatus (SCBA) units are available for use at B Plant. The units are to be used in accident conditions, or in areas where it is not feasible to wear a full-face mechanical filter respirator.

B Plant does not have an installed breathing air system. Sufficient need for such a system has not been demonstrated. When supplied air is needed, it is supplied by a cascade bottle air system or by a mobile air compressor, under the direction of the Radiation Protection Department, Safety and Quality Assurance Function.

### 8.4.4 Radiological Controlled Areas

Physical and administrative measures have been developed to control the radiological areas within B Plant. The normal radiological controlled areas within B Plant are illustrated in Figure 8-2. The radiological conditions of these areas as well as others which may temporarily exist in B Plant (Ref. 8-12), as indicated by the required postings at the boundaries of these areas, are:

- Radiation Area--an area where an individual could receive an exposure between 1 and 100 mrem in any one hour

- Radiation Area - Surface Contamination--an area in which the surface contamination may exceed 220 disintegrations per minute per 100 $cm^2$ for alpha radiation and 2,200 disintegrations per minute per 100 $cm^2$ for beta-gamma radiation

- Radiation Area - Airborne Radioactivity--an area where radioactive air concentrations exist which, if averaged over a normal work week, would exceed 25% of the maximum permissible concentrations of the particular radionuclide (Ref. 8-13)

- High Radiation Area--an area in which an individual could receive an exposure in excess of 100 mrem (but less than 5 rem) in any one hour

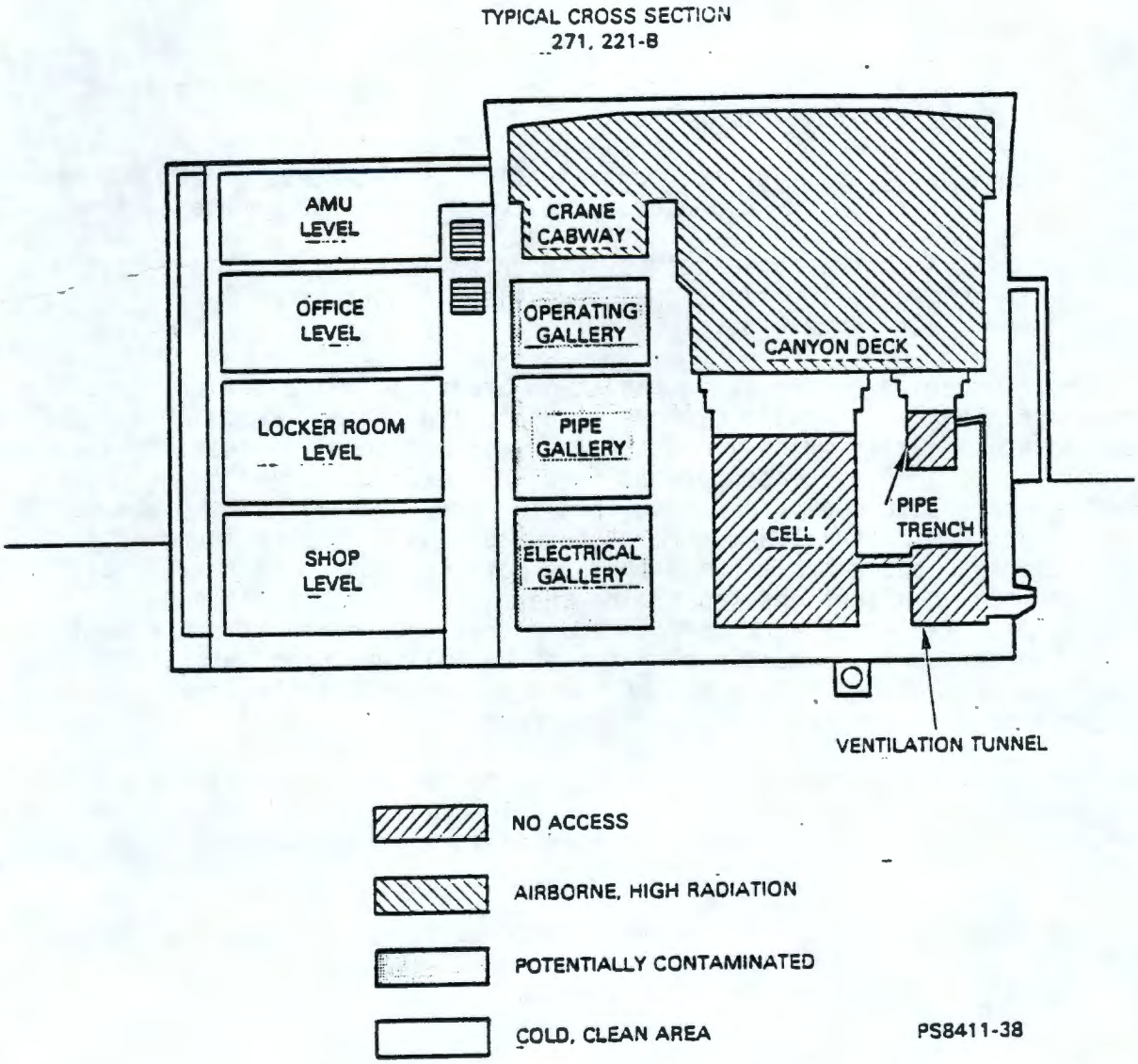


FIGURE 8-2. Radiological Controlled Areas, B Plant (271-B and 221-B).

The two squares with horizontal lines in Figure 8-2, shown between the AMU/Office levels and the crane cabway/operating gallery areas, are ventilation inlet louvers. The top inlet supplies air to the crane cabway, and the lower inlet supplies air to the operating and pipe galleries.

- Restricted Access Area--an area that requires special safety precautions for entry when any of the following conditions are present.

  - Dose equivalent rates to the whole body are in excess of 5 rem/h.

  - Removable surface contamination is in excess of 220,000 dpm per 100 $cm^2$ alpha and/or 2,200,000 dpm/100 $cm^2$ beta-gamma.

  - Airborne radioactivity concentrations exceed or are likely to exceed 100 times that specified in Attachment 1 of Reference 8-3.

The boundaries of the above radiation areas, if not a permanent wall of fence, are clearly indicated by rope or chain and signs. Restricted Access Areas have boundaries which limit the entry of personnel. Radiation areas can only be entered when accompanied by a RPT, except when entering personnel have been qualified in advance to carry out self-survey and self-monitoring. Administrative controls of access and stay time in radiation areas described above are accomplished by posting and procedures. Radiation areas are marked with signs indicating the radiological conditions (Ref. 8-12). Radiation work permits and operating procedures describe in detail the monitoring procedures that must be followed upon entering the area, the radiological conditions of the area, and the protective apparel that must be worn upon entering the area (Ref. 8-10, 8-11).

Outdoor sites surrounding B Plant also follow the physical and administrative requirements stated above to control access and stay time in radiation areas. The following sites are identified with appropriate postings and barriers:

- Underground radioactive waste storage tanks and diversion boxes
- Burial trenches, cribs, and ponds
- Underground pipelines
- Permanent, stabilized burial plots
- Roads and other paved areas covering radioactive contamination.

8.4.4.1 Routine Radiological Control. The standards for conducting radiation surveys at Rockwell are detailed in Reference 8-12, while the methods and procedures used by Radiation Monitoring for implementing the standards are detailed in Reference 8-10. Reference 8-10 describes the steps to be taken, the instrument to be used, the documents to be completed, and the purpose of the following surveys: contamination surveys, personnel contamination surveys, routine control program, and air sampling. The manual contains illustrations and descriptions of the radiation survey forms and records used at Rockwell. Routine control programs for B Plant are further detailed in a logbook kept in the Radiation Monitoring office. These forms contain information on the area to be surveyed, the frequency of the survey, the steps to be taken, the measurements to be performed, and the amount of documentation necessary. Currently, the log book for routine control procedures lists weekly, monthly, quarterly, and annual procedures.

Health Physics Procedures (HPPs), are used for special and routine tasks. HPPs for audits and inspections assure compliance with radiological controls, radiation work procedures and ALARA practice.

8.4.5 Health Physics Instrumentation

8.4.5.1 Portable/Personnel Survey Instruments. Portable radiation detection and measurement instruments are provided to all Hanford contractors, including Rockwell, from a central Hanford instrument pool operated for DOE by Pacific Northwest Laboratory (PNL). Table 8-3 lists the portable radiation detection equipment available from the central pool. The instruments are described in detail in documents available in the Radiation Monitoring offices (Ref. 8-10, 8-14).

Two types of portable survey instruments are available at B Plant for personnel monitoring for contamination. The Ludlum 177 and Ludlum 1778 are semi-portable, line-powered or battery-powered rate meters for use with the Geiger-Mueller type detector. The second type instrument used for personnel surveys is the Eberline Model BNW-1 which has several optional detectors. When the Eberline BNW-1 is used with a beta-gamma detector (Geiger-Mueller type) it is called an EGM. A special zinc sulfide scintillation detector enables the Eberline BNW-1 to be used as an alpha detector. Due to the infrequency of encountering alpha contamination at B Plant, the Eberline BNW-1 with the zinc sulfide scintillation detector is not normally used but is available in the Radiation Monitoring office.

In addition to the portable survey instruments, there are hand-and-foot counters placed at exits from work areas in B Plant (Fig. 8-3). Hand-and-foot counters are stationary instruments used by personnel to check their hands and the soles of their shoes for radioactive contamination. Hand-and-foot counters at B Plant are beta-gamma detectors. Hand-and-foot counters are not used as a substitute for personal surveys. Those personnel who exit from locations with a likely potential for contamination are required to perform complete personal surveys, which may be followed up with a check on a hand-and-foot counter. When placed at specific locations, the counters

TABLE 8-3. Portable Radiation Detection and Measurement Instruments.

| Type of instrument | Type of detector | Radiation(s) detected | Instrument range | Accuracy |
|---|---|---|---|---|
| CP | Air ion chamber | β, γ | 0-5,000 mR/h | -5 to +10% |
| Extended CP | Air ion chamber | β, γ | 0-5,000 mR/h | -5 to +10% |
| HPC | Thimble-type air ion chamber | γ | 0-10,000 R/h<br>0-5,000 rads/h | N/R |
| TPC | Thimble-type air ion chamber | γ | 0-500 R/h | -5 to +10% |
| LPC | Thimble-type air ion chamber | γ | 0-50 R/h | -5 to +10% |
| Snoopy | $BF_3$ proportional counter surrounded by moderator | η | 0-2,000 mrem/h | ±25% |
| EGM | Geiger-Mueller | β, γ | 0-100,000 cpm* | N/A |
| Lundlum model 177 and 1778 | Geiger-Mueller | β, γ | 0-500,000 cpm | N/A |
| PAM | ZnS scintillator | α | 0-100,000 cpm | N/A |
| PAC-6 | Air proportional | α | 0-100,000 cpm | N/A |
| Weyco (Hanford Poppy) | Air proportional | α | 0-500,000 cpm | N/A |

*Counts per minute.
N/R = Not Rated.
N/A = Not Applicable.

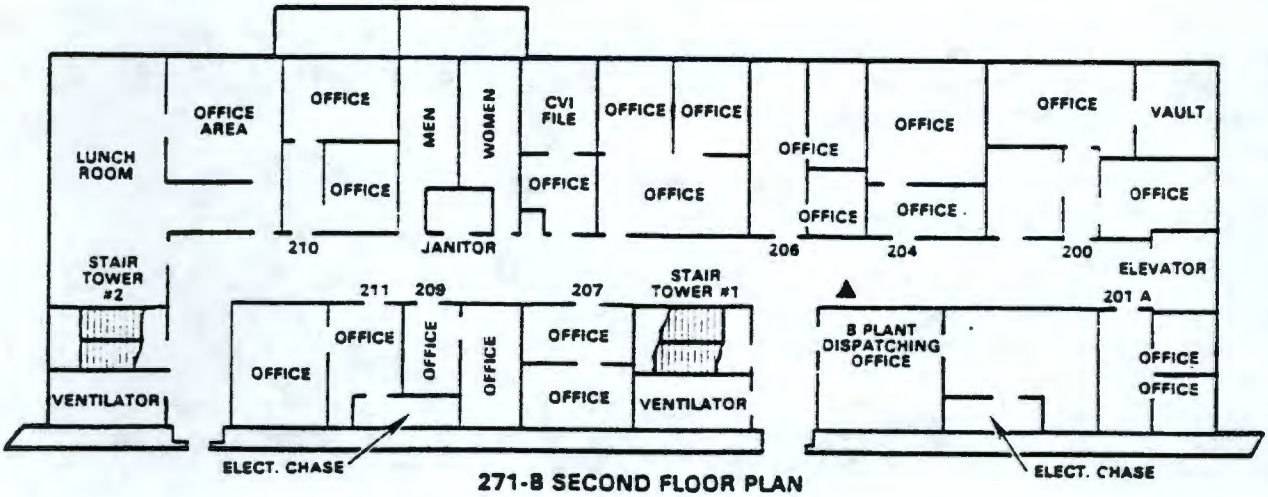


271-B SECOND FLOOR PLAN

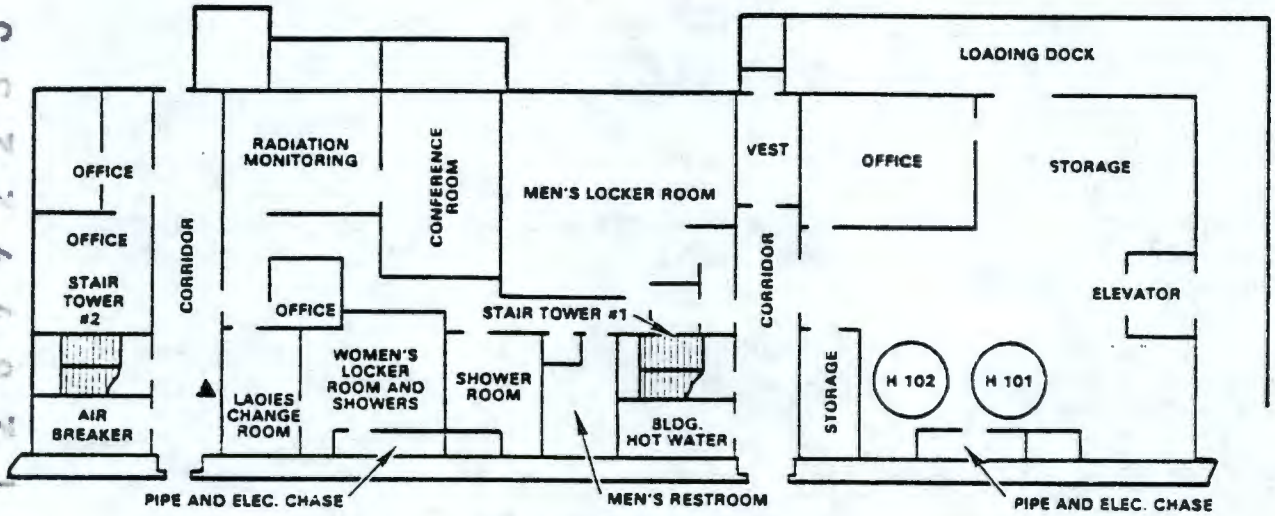


271-B FIRST FLOOR PLAN

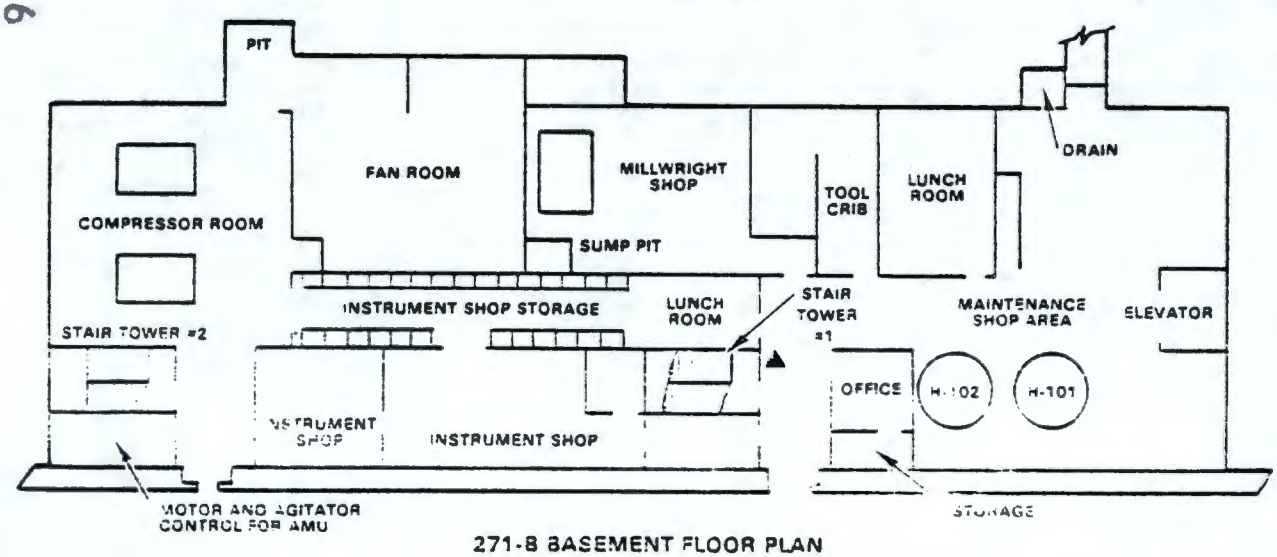


271-B BASEMENT FLOOR PLAN

▲ HAND AND FOOT COUNTER

PS9411-39

FIGURE 8-3. Hand and Foot Counter Locations, B Plant (271-B).

are available for use not only as a last check point for radiation workers, but also for office and administrative personnel before eating lunch and/or leaving the plant to go home.

All counters are routinely checked by Radiation Monitoring to determine if they are working properly.

8.4.5.2 Fixed Radiation Detection System. Radiation energy (RE) chambers are used at B Plant as the fixed radiation-detection system. RE chamber units are used to provide data on radiation levels in locations where only limited personnel entry is permissible due to high radiation or to confirm continuous low radiation levels at locations where portable instrument monitoring is not usually required. The 34 RE chamber constitute the area radiation system shown in Figure 8-4. Detailed description of the RE chamber is provided in Reference 8-10.

8.4.5.3 Air Samplers. Sampling of air for radionuclide content is accomplished using continuous air monitors (CAMs). Under normal conditions, the filters from the CAMs are changed weekly by Radiation Monitoring personnel and sent to the 222-S Laboratory for analysis. The results provide an integrated measure of the levels of radioactivity in the room air at B Plant. CAM units are self-contained air samplers and radiation detection units that provide instantaneous and continuous measurements of air radioactivity. CAM units are equipped with audible and visual alarms that warn personnel of off-normal conditions of room air so they may take appropriate action.

There are 24 operational CAM units in B Plant. Locations of CAMs are shown in Figure 8-4. Detailed description of CAMS are given in Reference 8-10.

8.4.5.4 Instrument Calibration and Maintenance. All portable surveillance instruments in use at B Plant (GMs, CPs, etc.) are maintained and repaired by the central instrument pool and calibrated by the Pacific Northwest Laboratory (PNL). CAMs, stack monitors and hand and foot counters receive initial acceptance testing and calibration by PNL and are then delivered to B Plant. These units then receive semi-annual calibration by Rockwell Instrument Maintenance and are source checked periodically by Radiation Monitoring.

9 3 1 2 8 9 9 2 2 5 4

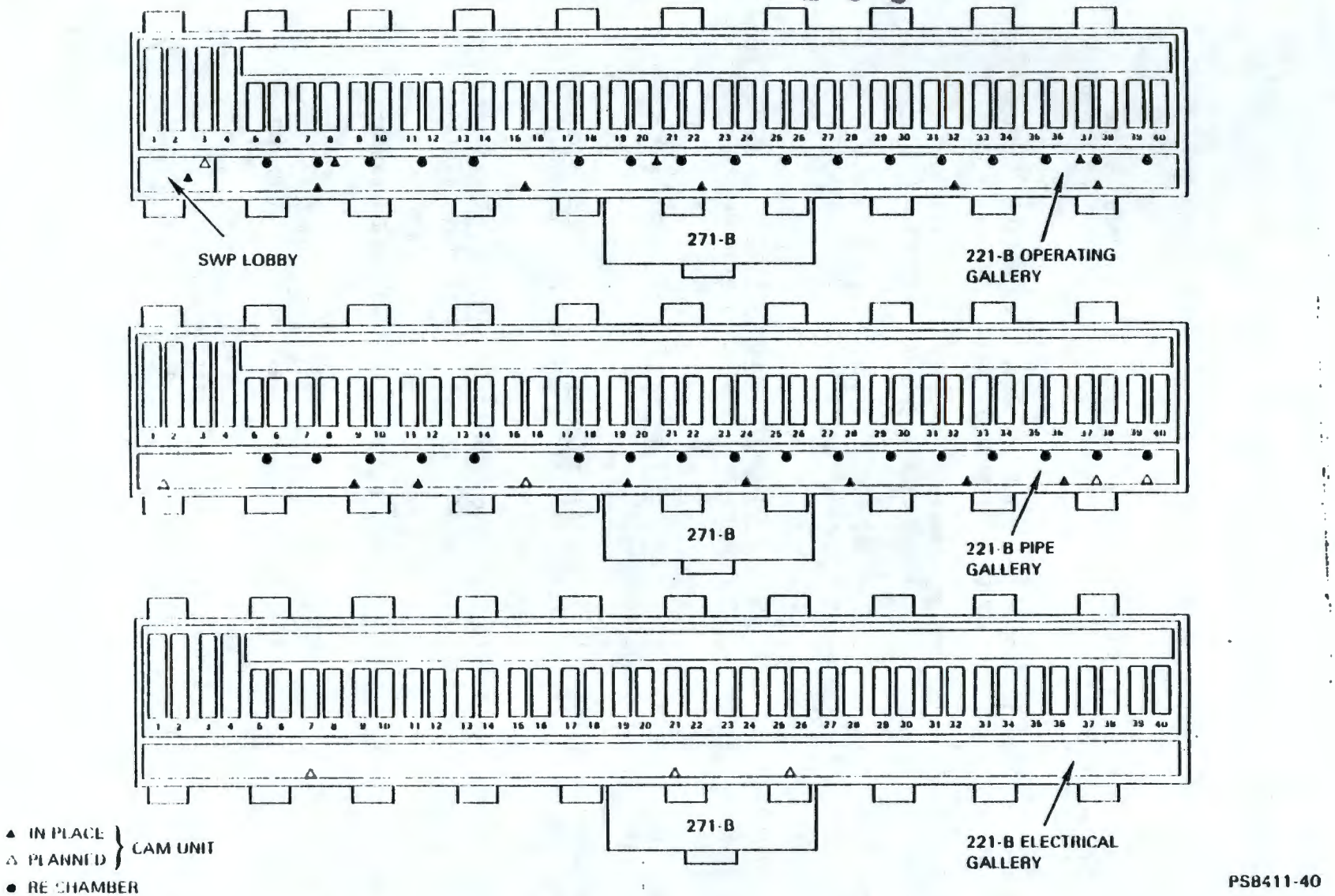


FIGURE 8-4. Locations of Area Radiation Dectection Instruments in B Plant (221-B).

## 8.5 REFERENCES


8-1. RHO-MA-100, June 1983, Rockwell Policy Manual, Rockwell Hanford Operations, Richland, Washington.

8-2. RHO-MA-278, September 1980, ALARA Program, Rockwell Hanford Operations, Richland, Washington.

8-3. DOE Order 5480.1A, August 13, 1981, Chapter XI, "Standards and Requirements for Radiation Protection," U.S. Department of Energy, Washington, D.C.

8-4. DOE Order 5484.1, February 24, 1981, Chapter I, "Notification of Occurrences," U.S. Department of Energy, Washington, D.C.

8-5. DOE Order 5484.1, February 24, 1981, Chapter II, "Investigation Requirements," U.S. Department of Energy, Washington, D.C.

8-6. DOE Order 5484.1, February 24, 1981, Chapter III, "Effluent and Environmental Monitoring Program Requirements," U.S. Department of Energy, Washington, D.C.

8-7. DOE/EV/1830-T5, April 1980, A Guide to Reducing Radiation Exposure to As Low As Reasonably Achievable, R. L. Kathren, U.S. Department of Energy, Washington, D.C.

8-8. RHO-LD-1792, 1981, Facility ALARA Plan for B Plant, Rockwell Hanford Operations, Richland, Washington.

8-9. RHO-MA-139, January 1983, Environmental Protection Manual, J. V. Panesko, et al., Rockwell Hanford Operations, Richland, Washington.

8-10. RHO-MA-145, April 1979, Radiation Monitoring Manual of Standard Practices, W. D. Killand, Rockwell Hanford Operations, Richland, Washington.

8-11. RHO-MA-172, Radiation Work Permits, Rockwell Hanford Operations, Richland, Washington.

8-12. RHO-MA-220, February 1983, Radiological Standards and Operational Controls, Radiological Engineering, Rockwell Hanford Operations, Richland, Washington.

8-13. RHO-MA-221, Vol. I and II, Accident Prevention Standards, Industrial Hygiene and Safety, Rockwell Hanford Operations, Richland, Washington.


9 3 1 2 8 9 9 2 2 5 6

8-14. Radiation Protection Technologist Training Manual, 1982, A. C. Smith, Rockwell Hanford Operations, Richland, Washington.

8-15. RHO-MA-235, February 1982, General Radiochemical Operator Training Manual, Rockwell Hanford Operations, Richland, Washington.

8-16. RHO-MA-115, June 1983, Engineering Procedure Manual, Rockwell Hanford Operations, Richland, Washington.

9 3 1 0 8 9 2 2 5 7

This Page Intentionally Left Blank.

# 9.0 ACCIDENT/SYSTEMS SAFETY ANALYSIS

In this chapter, B Plant hazards are identified and analyzed. Their potential consequences are assessed for possibilities of overwhelming the plant safety system. Accident scenarios are then developed for those accidents. These scenarios show how and to what extent the engineered barriers and administrative controls reduce potential consequences, and actual risk is determined.

## 9.1 SYSTEM SAFETY ANALYSIS PROCESS

This analytical process requires that several sequential tasks be performed before it can be determined which potential accidents will be developed into scenarios. Hazards are first identified and then analyzed to determine if the potential consequences can be absorbed within the plant and without undue risk to normal operational considerations. After this determination has been made, those accidents with potential for consequences exceeding established guidelines are selected for development of accident scenarios. These accidents are discussed here in terms of potential consequences, mitigating barriers, and the effects these barriers have on reducing the consequences of the accidents to acceptable levels. Probability of the occurrence and severity of the consequences are then considered in assessing risk. These two tasks--hazards identification and analysis, and the assessment of risks--are the main objectives of this chapter. This information is then related to established risk-acceptance guidelines, and the risks are judged either acceptable or unacceptable. If unacceptable, the system is modified, and the safety analysis process is repeated. See Figure 9-1.

## 9.2 ABNORMAL OCCURRENCES AND ACCIDENTS

Unwanted events which occur during the operation of B Plant may result in abnormal occurrences and/or accidents.

- An abnormal occurrence, as considered here, is an off-normal situation with variable onsite, but only minimal offsite, consequences. Abnormal occurrences are considered to be minor, compared to accidents with potential for significant offsite consequences. Though minor releases to the immediate environs may be associated with these occurrences, little or no risk is imposed on the offsite population over and above normal plant releases.

- An accident is defined as a situation or event that creates demands on the system beyond the capability of the equipment or confinement features. The accident, whether mitigated or not by operation of standby or engineered protection features, may result in injury to on-plant personnel and/or onsite/offsite consequences.

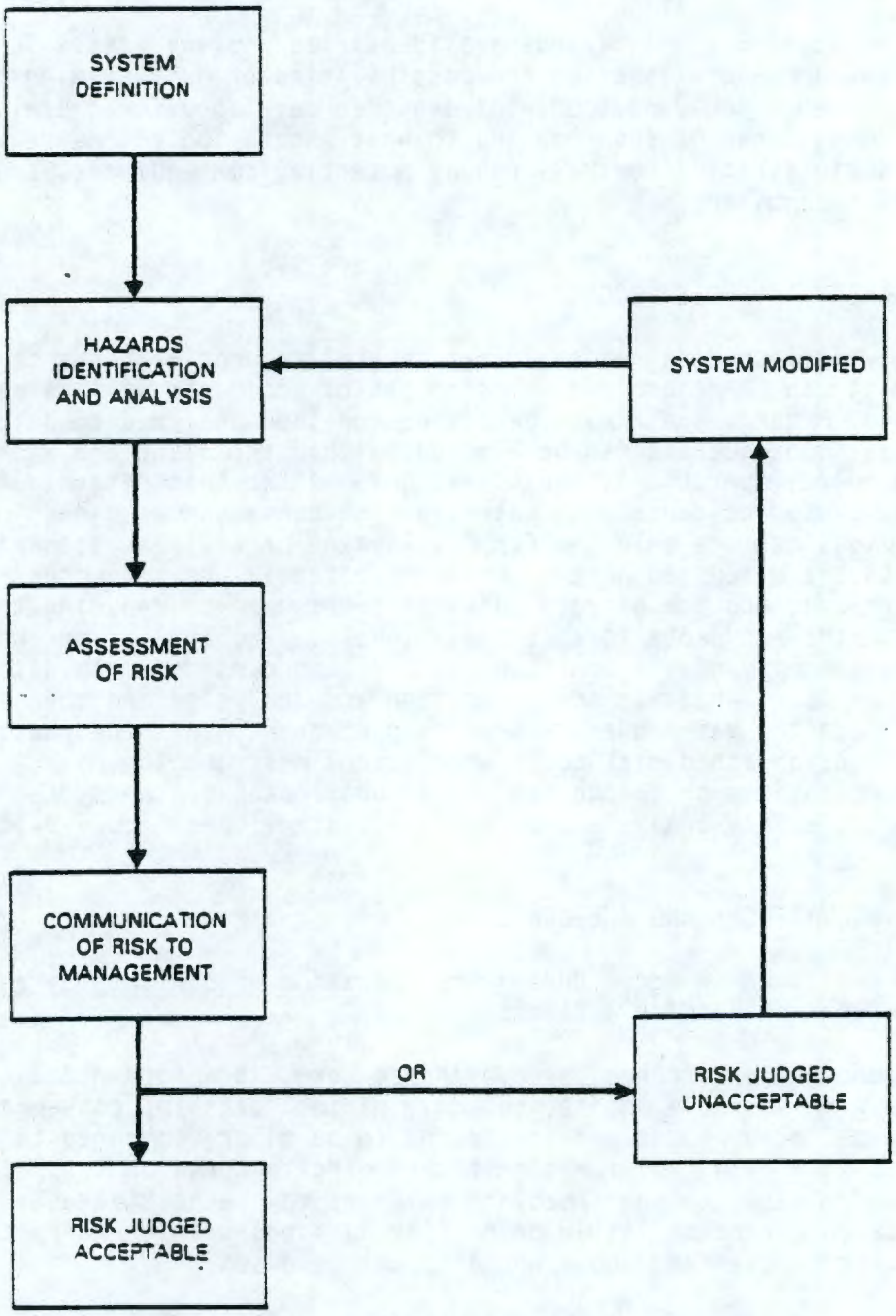


PS8411-41

FIGURE 9-1. System Safety Analysis Process.

A general comparison between severity of effects of abnormal occurrences and accidents is shown in Figure 9-2. This general diagram reflects relative severity and possible paths of successive stages which lead from abnormal occurrences or accidents. Abnormal occurrences result in relatively smaller consequences than accidents; hence, the lighter path lines from "abnormal occurrences" than from "accidents." Where both paths lead to the same result, the effects will be less for the abnormal occurrence than for the accident.

Each hazard may, with a loss of control, generate an abnormal occurrence or an accident; however, equipment and related controls, engineered safety systems, and administrative controls prevent and/or mitigate the effects of accidents caused by the hazard.

A generalized event tree for a monitored exhaust ventilation/filtration system is shown in Figure 9-3.

## 9.3 HAZARDS REVIEW

Two main categories of hazards are considered--those whose consequences can be absorbed by B Plant, and those whose consequences potentially might not. The absorbable consequences might be the results of industrial hazards, or of personnel exposure or contamination hazards, but will not produce onsite/offsite effects. Consequences which are potentially not absorbable might produce onsite or offsite consequences which exceed established guidelines for radionuclide release to the environment (Ref. 9-1). See Section 9.7.

## 9.4 DETERMINATION OF ACCIDENTS FOR ANALYSIS

Accidents identified in the Hazards Review as having consequences potentially exceeding guidelines by B Plant are evaluated in depth and developed in detail. If more than one type of potential consequence can be caused by a particular accident, all are developed. If more than one hazard can potentially produce the same accident, the accident developed is the one with the worst potential consequences, or which has the highest inventory at risk.

Such a treatment of the accident, as indicated, will usually result in a quantitative value of dose commitment to potentially affected people, as well as an estimated or calculated determination of the probability of occurrence of the accident. These two values are then used in determining the actuarial risk involved and the hazard category of the accident.

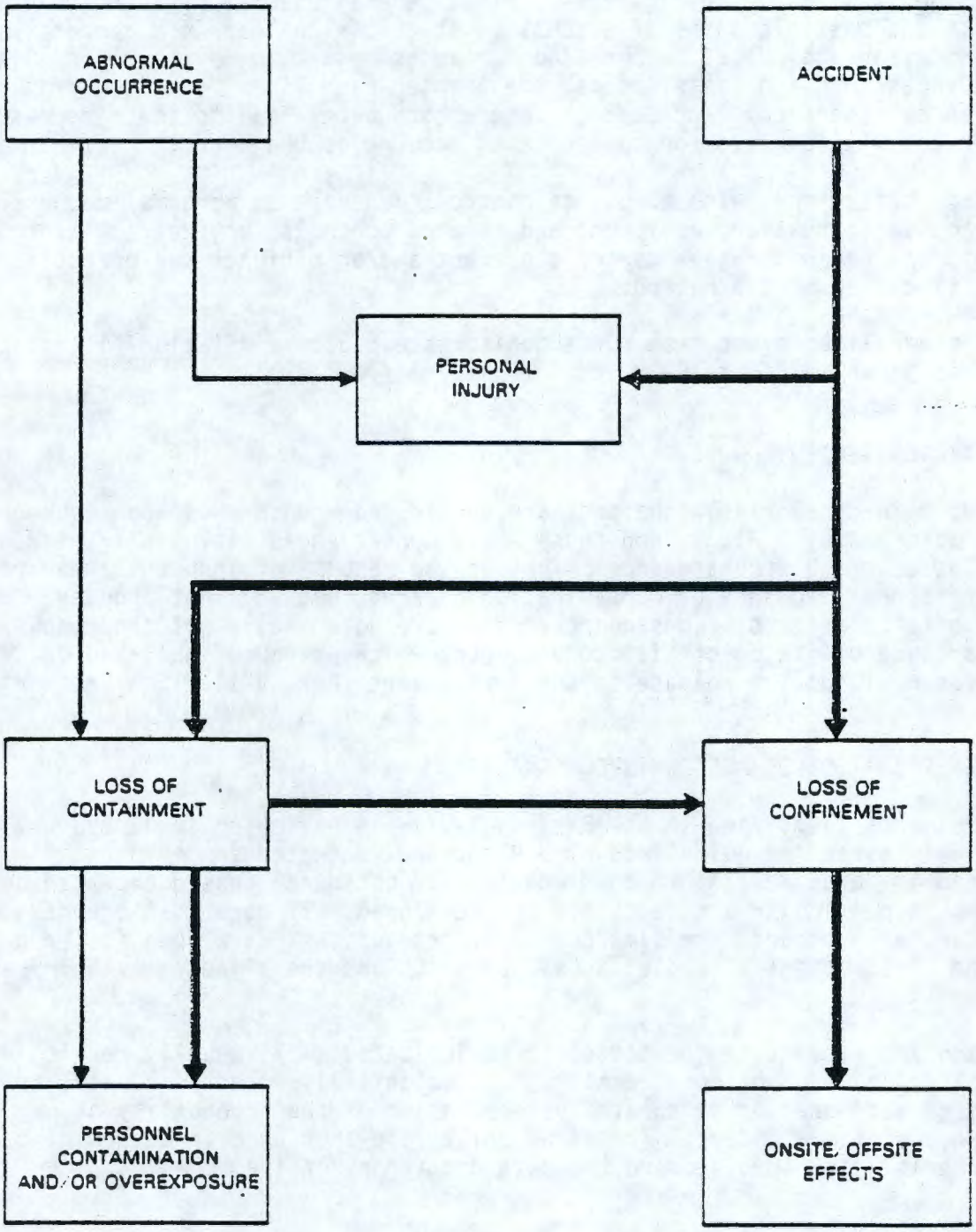


PS2411-42

FIGURE 9-2. General Comparison Between Severity of Effects of Abnormal Occurrences and Accidents.

9 3 1 2 8 9 9 2 2 6 2

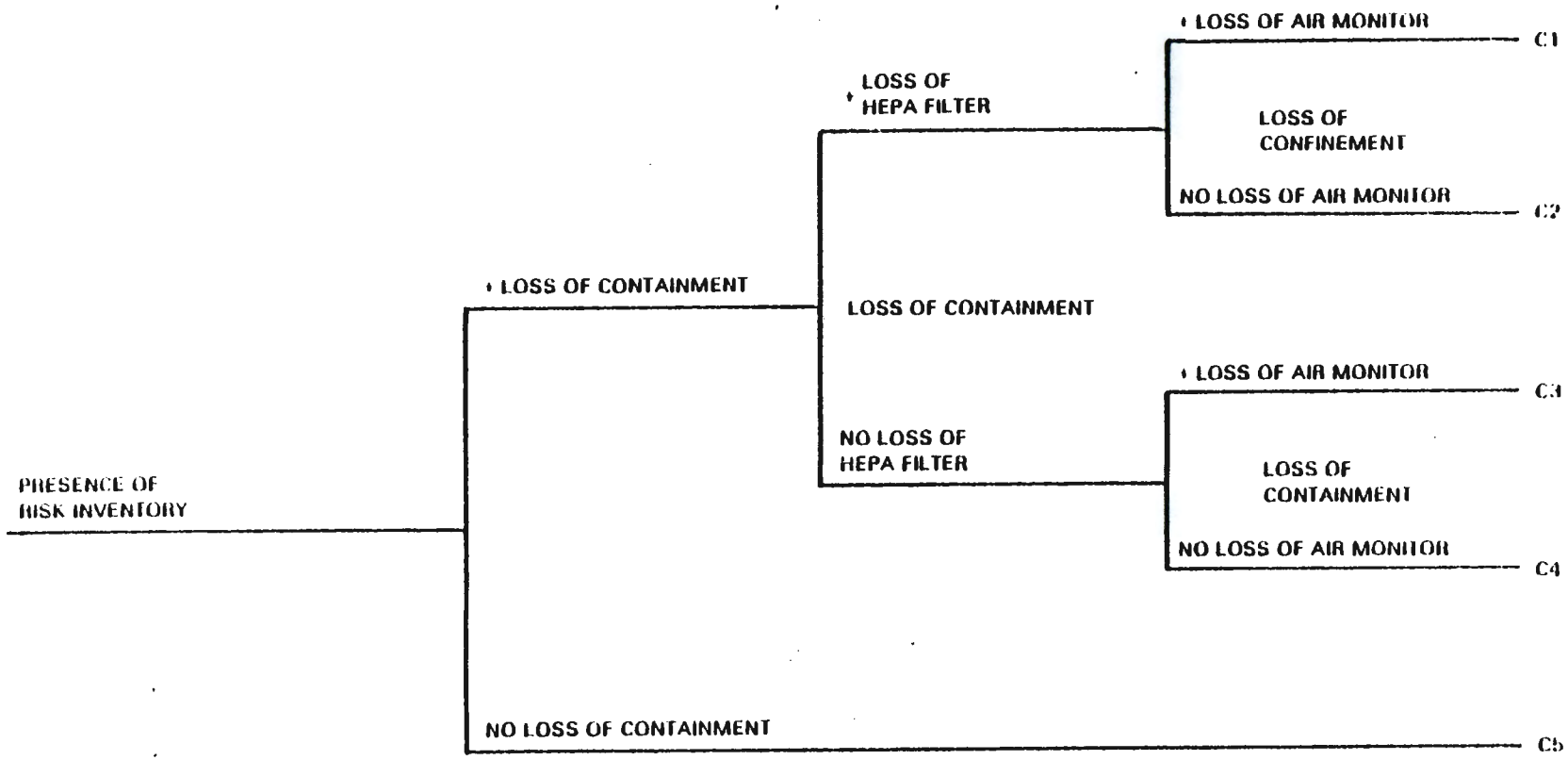


C1 - RELEASE OF CONTAMINATION TO ENVIRONMENT WITHOUT DETECTION
C2 - RELEASE OF CONTAMINATION TO ENVIRONMENT, BUT DETECTED
C3 - INTERNAL RELEASE TO FACILITY, NO RELEASE TO ENVIRONMENT (INTERNAL CONTAMINATION) DELAYED PERSONNEL RESPONSE
C4 - C3 (INTERNAL CONTAMINATION) MAXIMUM PERSONNEL RESPONSE
C5 - NO RELEASE TO FACILITY OR ENVIRONMENT (NORMAL OPERATION)

P58411 43

FIGURE 9-3. Generalized Event Tree for a Monitored Ventilation/Exhaust System.

## 9.5 ACCIDENT RISK ASSESSMENT AND HAZARD CLASSIFICATION

The term "risk" is used actuarially. To limit the number of detailed analyses for those accidents which effectively determine the risk envelope for B Plant, a process was developed for determining risk, based on simplification of a more complete risk expression. The risk of a particular action is a mathematical product of five terms, such that Risk = A x B x C x D x E where:

A = probability of occurrence

B = magnitude of severity

C = measure of harmful characteristics of occurrence

D = measure of the environmental transport factor

E = measure of the population at risk

The total risk involved in operation of the facility is therefore the summation of this expression for all release sequences. For the purpose of comparing and screening the sequences for one facility at one site, the expressions C, D, and E may be held as constants, leaving only the requirement for the determination of A and B to determine relative risk.

A pictorial presentation of risk determination is shown in Figure 9-4. The first level, leading to the Preliminary Hazards Analysis, has been developed from B Plant operations procedures and with the assistance of Process Operations and Process Engineering personnel. This information is analyzed by breakdown into potential accident, type of potential consequences, and extent to which mitigated, and is presented in Section 9.7 for the accidents considered to have potential for consequences exceeding established guidelines.

### 9.5.1 Probability of Occurrence

For each accident scenario the probability of occurrence of the accident is determined according to the probabilities of particular material and/or personnel failures necessary for the accident to occur. These individual probabilities usually cannot be assessed from specific B Plant or Hanford historical data, but are extracted from existing data of similar failures elsewhere (Ref. 9-2, 9-3), though based on nuclear facility experience. These probabilities do not necessarily apply to common cause situations, which are those situations in which one particular initiating event can produce multiple accidents (e.g., an earthquake or a tornado). Natural forces events have probabilities of their own, and cause accidents with all sorts of permutations and combinations. These events, as common causes, are addressed in a scenario of their own (Section 9.18). In addition, the probability of a 1/2 safe shutdown earthquake (SSE) (one-half the magnitude of a SSE) is included in each scenario for comparative purposes.

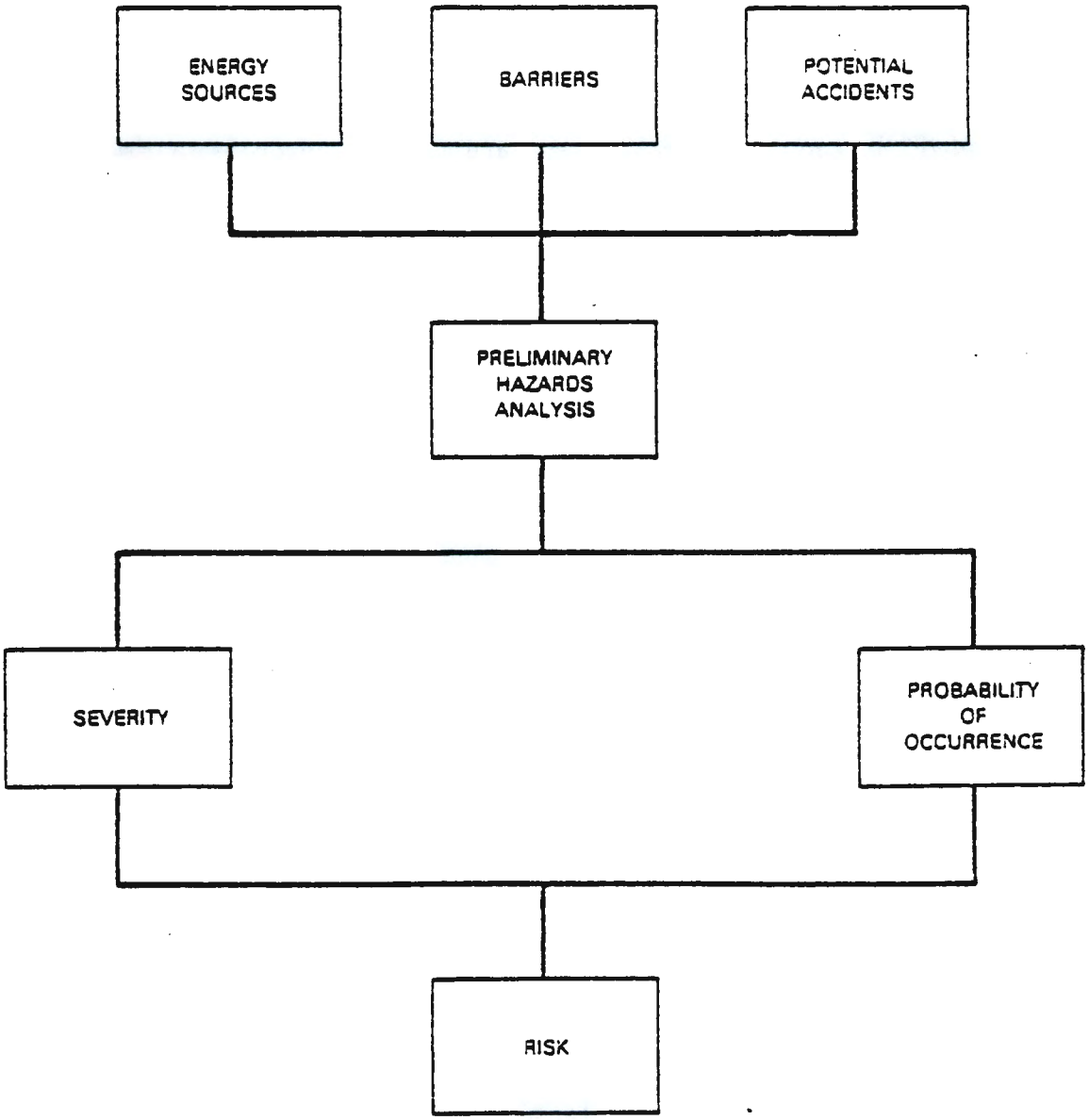


PS8411-44

FIGURE 9-4. Risk Analysis.

### 9.5.2 Severity of Consequences

9.5.2.1 Radiological Accidents. The accident scenarios consider the inventory at risk or involved in the accident and the effects this inventory has on occupational workers (who are assumed to be located where they can receive the greatest degree of harm when the accident occurs). Their exposure, based on the inventory involved, is determined and related to Rockwell guidelines (Ref. 9-4).

For non-occupational workers, there are three categories of "maximum-individuals" for whom one- and fifty-year dose commitments are determined. These are identified and described as:

- Onsite--an individual assumed to be located within a normally occupied building or area separate from the facility under evaluation, and typically assumed to be at 2704-E, which is 600 m from the accident site. Any portion of his internal dose commitment attributed to contamination is assumed to be by inhalation.

- Offsite--an individual assumed to be located where the general public has closest proximity to B Plant. All of his internal dose commitment is assumed to be by inhalation. Exposure time is limited to two hours immediately following the accident due to the ability to restrict access on the public highway.

- Offsite--an individual assumed to be located at the closest point on the site boundary. His dose commitments include inhalation, ingestion of contaminated foodstuffs, and external dose from contamination on the ground.

Whole body, bone, and lung dose commitments are determined for all three of these maximum individuals. The highest of these values for all the one-year commitment is then used to indicate the severity of the accident.

Computer programs are commonly used to calculate radiation doses resulting from both normal operations and accidents. Any of several programs validated by Pacific Northwest Laboratory may be used; they include SUBDOSA, DACRIN, and PABLM. Most of these programs are based on the models developed by the International Commission on Radiological Protection.

The input for the computer programs will consist of a source term (the nuclide form and the quantity of radionuclide which may be released as a result of a given event), the release height, and meteorological conditions. Maximum conservatism is used for all input terms. The programs generate the dispersion characteristics of a resultant plume and give the various doses as a function of distance from the release point. Both 1-yr and lifetime (50 yr) doses are given. Dose commitments for, and locations of, the "maximum individual," both onsite and offsite, are specified.

It is required that the codes used are approved by the Hanford Dose Overview Committee, a function of PNL. Calculations performed for safety analysis documentation must be verified by the Radiological Engineering and Effluent Controls Group before release and submittal to DOE-RL. In this report, no dose commitment calculations have been conducted except by Radiological Engineering (Ref. 9-17).

9.5.2.2 Industrial Accidents. Because there are no established guidelines for acceptability of industrial accident risk, such a determination has not been made. In addition, since the common cause of all accidents has established the probability of these accidents, whether consequences are radiological or industrial, determination of severity for industrial consequences has not been attempted. To have done so would permit establishment of risk, thereby implying acceptability.

### 9.5.3 Risk and Risk Acceptance

Once the probability of occurrence and the severity of consequences of a particular accident have been determined, these two values are multiplied together to establish the risk of that accident.

Risk acceptance guidelines have been established by Rockwell (Ref. 9-5) to provide assurance that risks have been limited to a level which is acceptable. Criteria for acceptable risk are presented in terms of potential radiological dose commitment and corresponding maximum acceptable accident probability (Table 9-1).

### 9.5.4 Hazard Classification

Maximum dose commitments from all scenarios are compared to the values given in Table 9-1. The hazard class of the facility being considered is that of the highest hazard class indicated by the comparison. The guidelines given in Table 9-2 (Ref. 9-5) are used to relate consequences from radiation exposure to the hazard class of a facility. Note that these data are not risk values, but consequences; no probability is applied.

## 9.6 ACCIDENT CONSEQUENCES

A principal objective in the design of B Plant was to prevent the uncontrolled release and dispersal of the radionuclides stored and handled within the facility. These materials are inherent in process fluids, process solids, building ventilation gases, and generated waste materials. One or more containment/confinement barriers/systems restrict release of radionuclides to the environment or into areas normally occupied by plant personnel. Analysis of accidents involving loss of control of these materials can be performed by analysis of the leak paths for each accident situation.

The most significant possible radiological accidents fall into three main categories as to both mechanism of cause and manifestation of effects. A fourth category encompasses non-radiological accidents. These categories are discussed below.

TABLE 9-1. Radiological Dose Criteria for Risk Acceptance.

| Event | | Maximum Potential Dose Commitment (rem) | | | | | |
|---|---|---|---|---|---|---|---|
| | | Offsite | | | Onsite | | |
| Description | Estimated probability of occurrence, P ($yr^{-1}$) | Whole body | Bone surface - Thyroid | Lung Other organs | Whole body | Bone surface Thyroid | Lung Other organs |
| Incidents or events of moderate frequency which may occur several times during the life of a facility | $1 \geq P > 10^{-1}$ | 0.01 per year | 0.06 per year | 0.03 per year | 0.1 per year | 0.6 per year | 0.3 per year |
| Infrequent incidents or events which may occur during the lifetime of a facility | $10^{-1} > P \geq 10^{-3}$ | 0.5 per year | 3 per year | 1.5 per year | 3 per year | 15 per year | 75 per year |
| Events which are limiting faults and are not expected to occur during the life of a facility | $10^{-3} > P > 10^{-7}$ | 25 lifetime | 300 lifetime | 75 lifetime | 25 lifetime | 300 lifetime | 75 lifetime |

TABLE 9-2. Dose Commitment--Total Dose Equivalent (internal plus external) Received by a Maximum Exposed Individual in the First Year Following a Credible Accident (rem).

| Hazard class | Offsite | | | Onsite | | |
|---|---|---|---|---|---|---|
| | Whole body | Bone surface Thyroid | Lung Other organs | Whole body | Bone surface Thyroid | Lung Other organs |
| Low | $\leq 0.5$ | $\leq 3$ | $\leq 1.5$ | $\leq 5$ | $\leq 30$ | $\leq 15$ |
| Moderate | >0.5 to <5 | >3 to <30 | >1.5 to <15 | >5 to <25 | >30 to <150 | >15 to <75 |
| High | $\geq 5$ | $\geq 30$ | $\geq 15$ | $\geq 25$ | $\leq 150$ | $\geq 75$ |

*A credible accident has a probability $>10^{-7}$/yr.

9.6.1 Breach of Confinement (Environmental Release)

Breach of confinement is the movement of a hazard or energy beyond those physical systems which are established to prevent such a movement. The result is a release to the environment of the hazard or energy. The confinement barrier is that which precludes loss of radionuclides to personnel beyond the building or to the environment in the event that the containment barrier is lost or circumvented. The HEPA filtration-exhaust systems provide this confinement capability for airborne radionuclides.

The B Plant 221-B confinement systems are represented by the main canyon exhaust-filtration system, the Vessel Vent System #2 (VVS#2), and the EF-1 through EF-7 exhaust-filtration systems (pipe gallery and storage room). The 212-B Cask Station ventilation flow is filtered only through pre-filters, after which it exhausts to the 221-B air tunnel for HEPA filtration by the 221-B canyon exhaust filters.

The primary difference between the various exhaust-filtration systems is the number of stages of HEPA filtration provided. At least two stages of HEPA filtration are provided for ventilation exhaust air from the 221-B Canyon and the VVS#2. There is presently a third HEPA filter ahead of the other two HEPA filters, in the canyon exhaust system, which can be bypassed when it becomes excessively loaded. One stage of HEPA filtration is provided at each EF unit for ventilation exhaust from the pipe gallery and storage room to the atmosphere, and from the Vessel Vent System #1 (VVS#1) to the 221-B air tunnel. Because ventilation air from the VVS#1 exhausts to the 221-B air tunnel, this exhaust flow experiences two more stages of HEPA filtration via the main canyon (221-B) exhaust-filtration system.

9.6.1.1 Probability of Occurrence. Figures 9-5, 9-6, and 9-7 provide functional diagrammatic representation of the 221-B canyon, vessel vent systems, and EF exhaust HEPA filtration systems, respectively.

Failure of the confinement system can be analyzed independently from accidents. Due to requirements for continuous filtration/ventilation system operation, loss of HEPA efficiency can occur at any time, whether during accident conditions or normal operations. Loss of any HEPA filter unit is estimated at $1.1 \times 10^{-4}$ per year, primarily dominated by filter deterioration (Ref. 9-6). Probability of "worst case" failure of a HEPA assembly is the product of the probabilities of all filter stages failing in that assembly, with failure of a single filter unit constituting failure of the entire stage.

- 221-B Canyon Exhaust HEPA Filtration System--For this system, with 80 filter units per stage, and two functioning stages in series per assembly, the probability of failure of an entire filter assembly is $7.7 \times 10^{-5}$. The probability of loss of both confinement and detection is $2.0 \times 10^{-5}$/yr, with the probability of CAM loss considered to be $2.6 \times 10^{-1}$/yr (Ref. 9-2). See Figure 9-8 and Section 9.6.1.3.

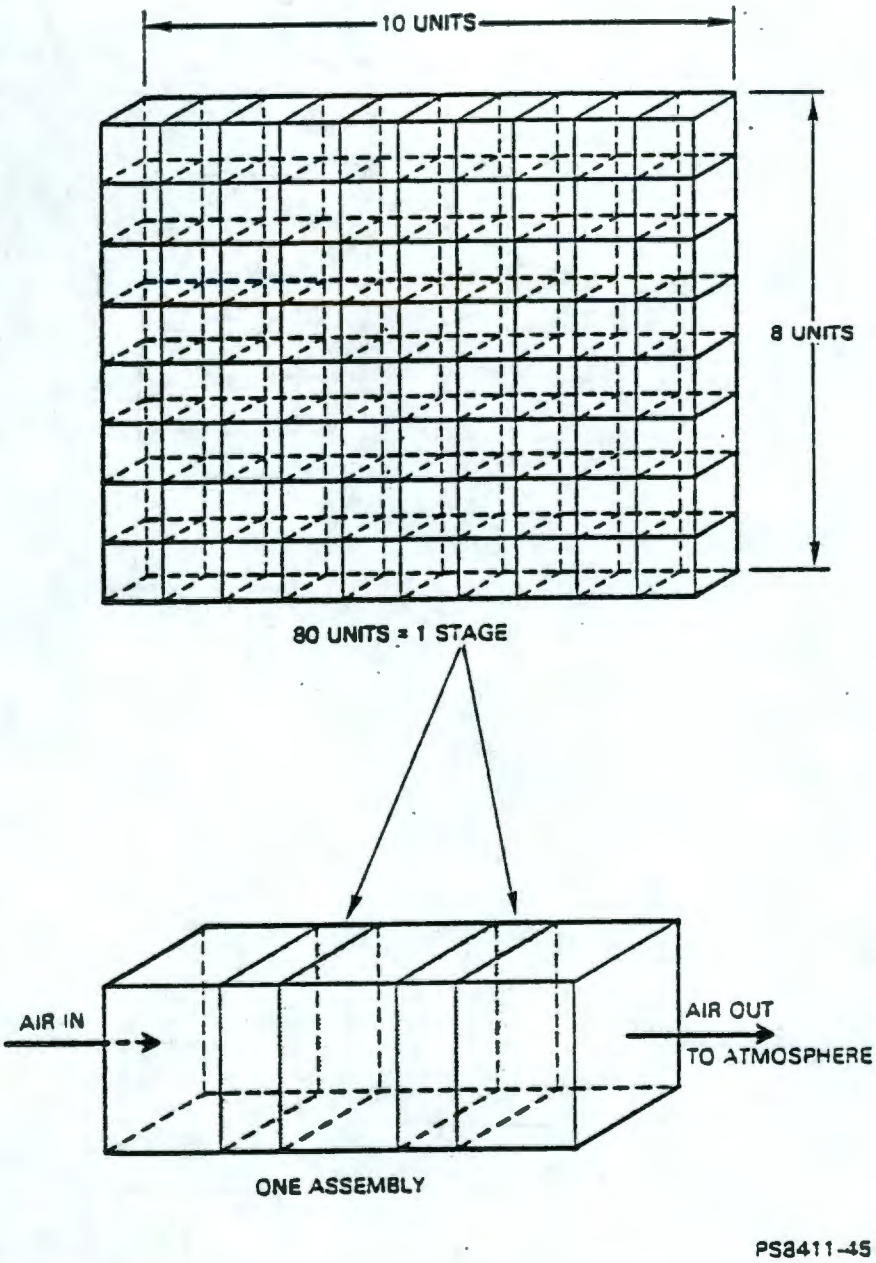


FIGURE 9-5. Functional Diagrammatic Representation of the 221-B Canyon HEPA Filtration.

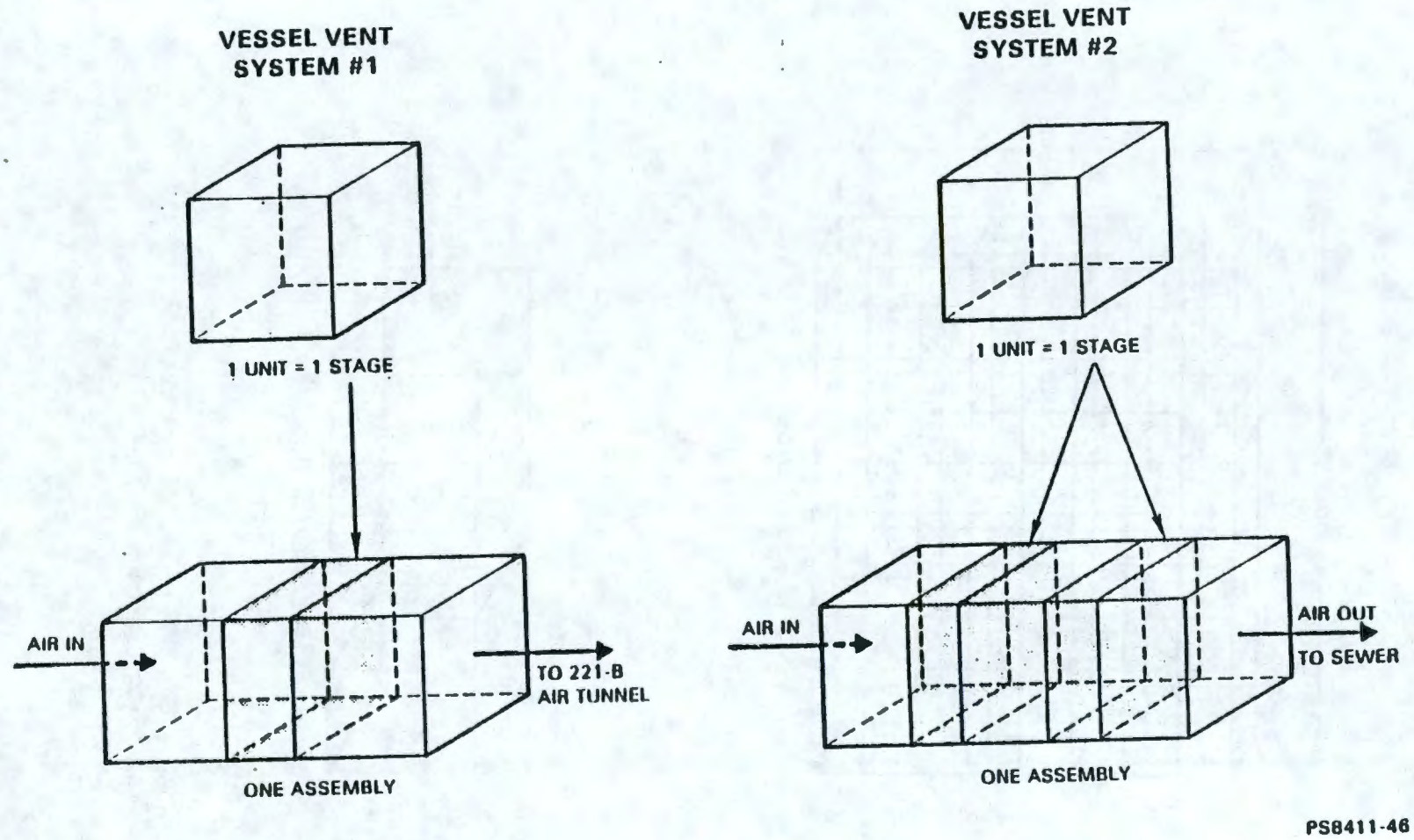


FIGURE 9-6. Functional Diagrammatic Representation of the Vessel Vent Systems HEPA Filtration.

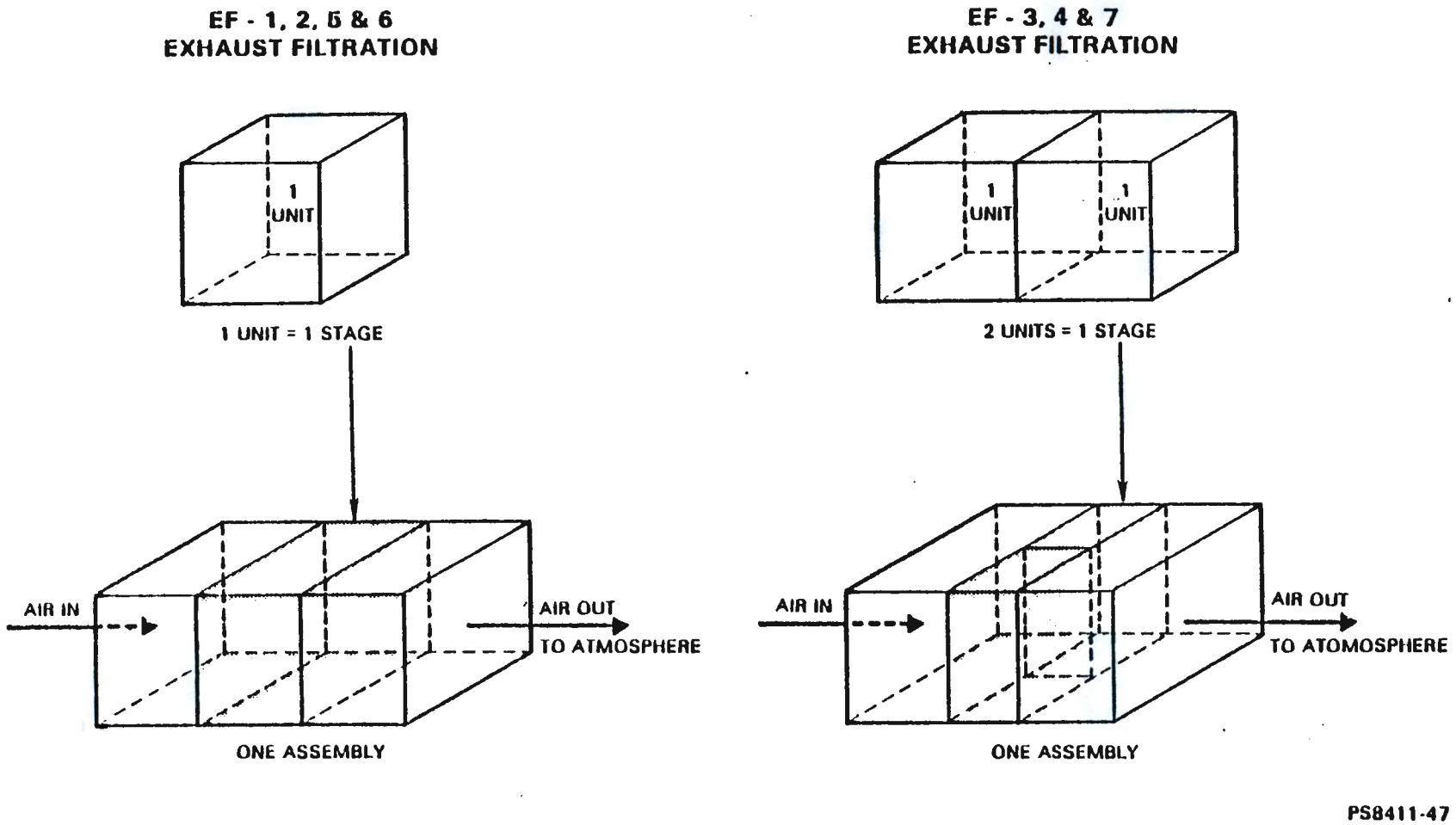


FIGURE 9-7. Functional Diagrammatic Representation of EF-1 Through EF-7 Exhaust HEPA Filtration.

9 3 1 2 8 9 9 2 2 7 4

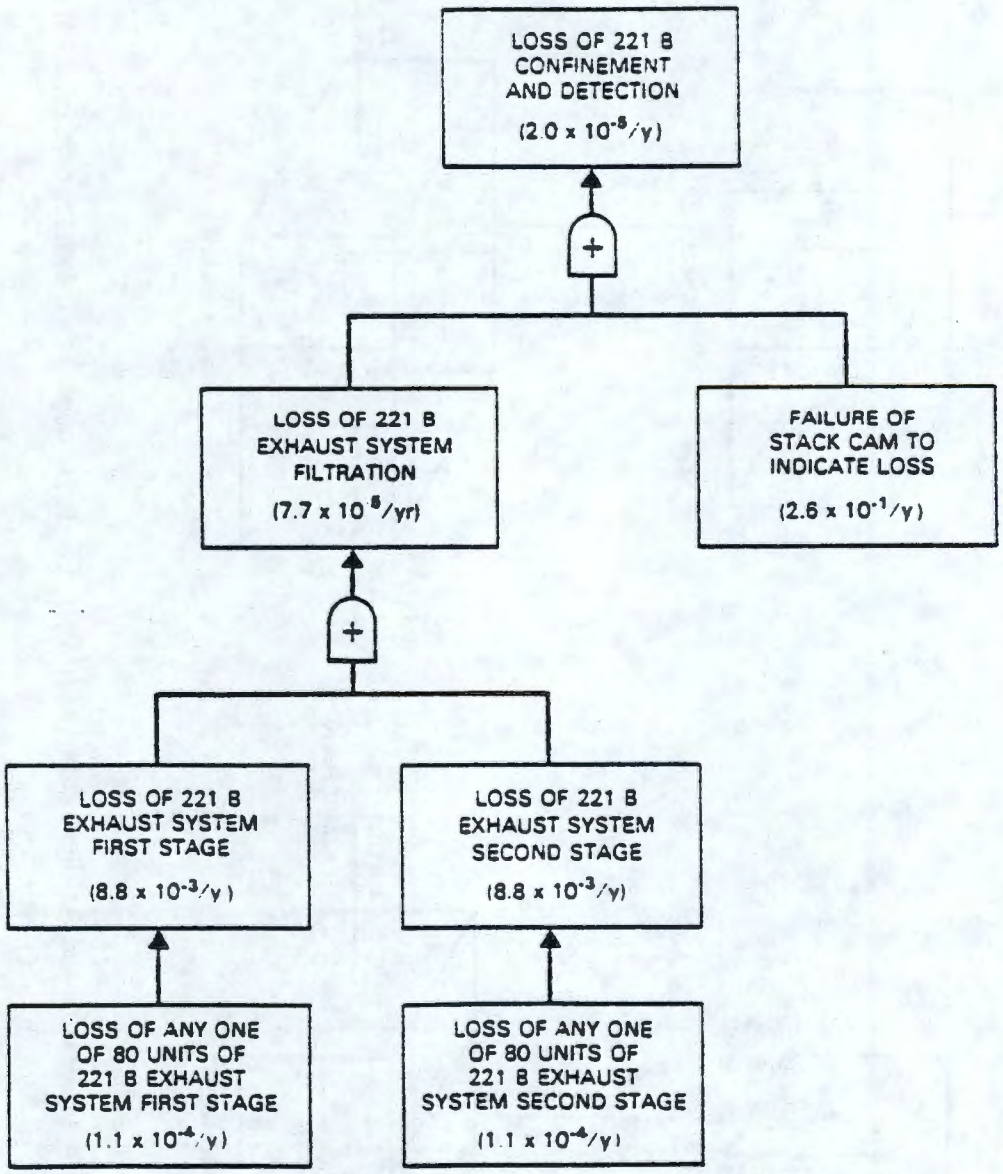


FIGURE 9-8. Probability for Loss of Confinement and Detection, 221-B Canyon HEPA Filtration System.

- Vessel Vent System #1--Since this system incorporates a single non-DOP-testable HEPA filter unit as its only filtration before exhausting into the 221-B air tunnel, credit is not taken for its effect. Therefore, the probability of filter failure is identical to that for the 221-B exhaust HEPA filtration system (Fig. 9-8).

- Vessel Vent System #2--For this system, with one filter unit per stage, and two stages in series per assembly (two assemblies), the probability of failure of all stages of an entire filter system is $1.5 \times 10^{-16}$/yr. The probability of loss of both confinement and detection is $3.8 \times 10^{-17}$/yr (Fig. 9-9).

- EF-1 Storeroom Exhaust Filtration--For this system, with one filter unit per assembly, the probability of failure of this assembly is $1.1 \times 10^{-4}$/yr. There is no CAM on this exhaust stream, but air flow to this storeroom is ultimately from the operating gallery, in which there are numerous CAMs. Upon alarm, this exhaust unit will be shut down and the exhauster nearest the alarming CAM will be sampled. This mode of operation is permitted by deviation No. 83-006 to RHO-MA-139 (Ref. 9-1), and is valid until Sept. 1, 1985, at which time the deviation must be reapproved, or adequate alternative measures must have been taken.

- EF-2 through EF-7 Pipe Gallery Exhaust Filtration--Because these six exhausters serve the same area, and are all single-stage assemblies, they can be considered to be one single assembly containing one nine-unit stage. The probability of failure of this system is, therefore, $9.9 \times 10^{-4}$/yr. There are no CAMs on any exhauster in this system, but a CAM unit is installed in front of each exhaust filter face. Air input to the pipe gallery is from the operating gallery, where there are numerous CAMs. Upon alarm, the exhauster nearest the alarming CAM will be sampled and the remainder of these exhausters will be shut down. This mode of operation is permitted by deviation No. 83-006 to RHO-MA-139 (Ref. 9-1), and is valid until Sept. 1, 1985, at which time the deviation must be reapproved, or adequate alternative measures must have been taken.

9.6.1.2 Severity of Consequences. Resulting consequences from a breach of confinement are considered to affect directly onsite/offsite persons, but only if the released radionuclides exceed established guidelines (Ref. 9-4). The extent to which these guidelines may be exceeded depends on a number of factors pertinent to the accident, such as:

- Quantity of material at risk
- Radioactive source terms involved
- Resulting integrity of the filtration system HEPA filters
- Number of stages of HEPA filtration
- Resulting operability of the ventilation system

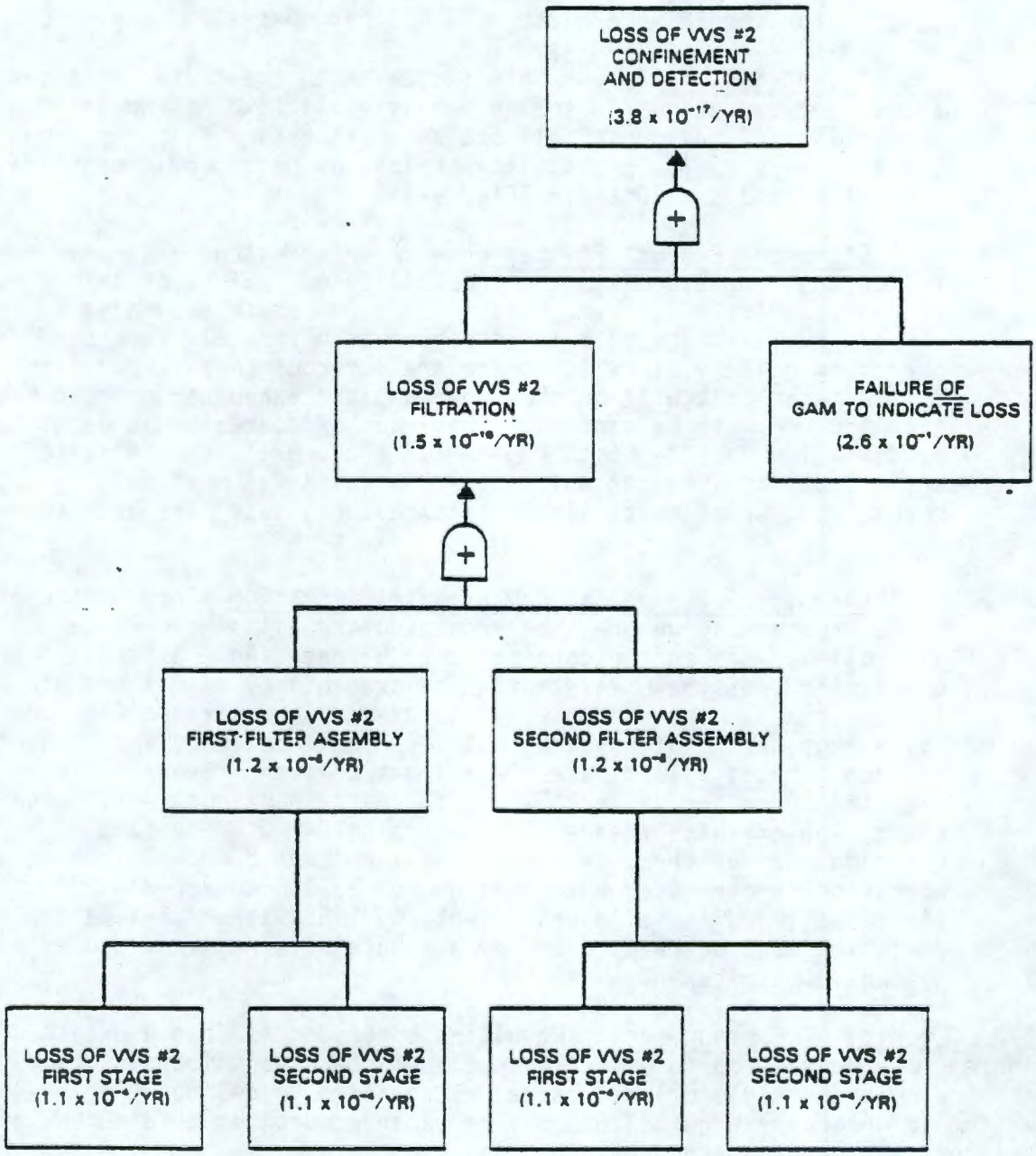


FIGURE 9-9. Probability for Loss of Confinement and Detection, VVS#2.

- Quantity of source term material transported to the HEPA filters
- Quantity of source term released to the atmosphere via bypass of the HEPA filters
- Atmospheric conditions prevailing at the time of the accident
- Other parameters unique to the particular accident

Quantitative values are determined, if possible, for these factors; if not possible, assumptions are used, based upon maximum reasonable unfavorable conditions. For HEPA filters of suitable integrity, fractional penetrations are assumed to be as indicated below, based on DOE minimum requirements (Ref. 9-6):

| Testable HEPA filter stages | Total fractional penetration |
|---|---|
| 1 | $5 \times 10^{-4}$ |
| 2 | $1 \times 10^{-6}$ |

The overall fractional penetration of two stages is higher than the square of that for one stage (Ref. 9-6) because filter penetration increases with each successive filter stage. An additional (third) stage of HEPA filtration is provided by VVS#1 HEPA filter, but it is not DOP-testable when in place; therefore, credit is not taken for it when determining probability of a filter failure (Section 9.6.1.1). The multi-stage HEPA filter systems in place at B Plant are not DOP-testable by individual stages, although they are testable by assembly. All future such systems will be DOP-testable by individual stages.

After probability of occurrence and severity of consequences have been determined for a particular accident, these values are then used in calculating risk, as described in Section 9.5.3.

9.6.1.3 Main Stack Monitor. The main stack conducts to the atmosphere the exhausts from 221-B canyon and cells, VVS#1, and 212-B cask station. Dual record air sampling devices are installed, but indicate only radioactive loading of the samples with respect to time. Differential pressure (DP) indicators are installed in the filter assembly, and might detect a breach of filtration, but would not audibly or visibly alarm if they did so; detection by this means is by surveillance of the DP indicators on a twice per shift minimum basis. A CAM unit is installed, and does audibly and visually alarm if its detection set-point is exceeded. It also announces its own failure if such occurs. Therefore, the single CAM on the main B Plant exhaust stack is the only device considered in determination of probabilities. Its failure rate is considered to be $2.6 \times 10^{-1}$/yr based on Rockwell operating experience with beta-gamma CAMs.

9.6.1.4 B Plant Confinement History. Radioactive materials in B Plant gaseous effluents have been routinely measured (Ref. 9-29). These releases have consisted primarily of strontium and cesium. Releases from all stacks

of the B Plant complex have been monitored; these stacks are associated with the following individual facilities:

| Stack | Facility |
|---|---|
| 291-B-1 | 221-B processing cells and canyon, VVS#1, and 212-B Cask Facility |
| 296-B-5 | 221-BB, receives process and steam condensate |
| 296-B-13 | 221-BF, receives process condensate |
| 296-B-14 | VVS#2 |

The 291-B-1 stack, exhausting the ventilation air from the 221-B canyon and cells, VVS#1, and 212-B Cask Facility, is the only stack from which gaseous effluents had historically exceeded established guidelines until 1983, when they were brought under control (Ref. 9-29). Analytical information indicates that these releases were principally cesium. Annual averages indicate that these isotopes have not exceeded Table I guidelines (Ref. 9-1). Assuming that all released material was $^{137}Cs$, Table II (Ref. 9-1) guidelines have not been exceeded on an annual average. However, assuming one-third of the released material has been $^{89,90}Sr$ (maximum percentage ever detected), then Table II guidelines were exceeded by about one order of magnitude on an annual average basis.

Particular increases in released material have generally been associated with periods of high wind conditions, although the HEPA filter integrity was not compromised. Over time, a series of leaks in the ventilation ductwork was discovered, and the most recently discovered leak was repaired after the elevated discharge in February 1983. Since that time, average monthly concentration of released beta-emitters has been on the order of $10^{-12}$ µCi/mL. The average concentration of the stack for first quarter 1984 (latest available information at time of writing) was $2 \times 10^{-12}$ µCi/mL beta.

9.6.1.5 Accident Scenarios. Breach of confinement consequences are addressed in all scenarios.

### 9.6.2 Breach of Containment (Spread of Contamination)

Breach of containment is the movement of a hazard or energy beyond a containment barrier, which can result in an excessive radiation dose rate outside the containing structure or in a spread of contamination. The containment barriers are those barriers in physical contact with radionuclides in normal use (i.e., tanks, processing equipment, cell enclosures, piping, and waste containers). Primary containment is that barrier which protects those personnel who are immediately involved with fission products processing or handling operations. The primary emphasis here is the radiological condition produced by the accident, but not the personnel effects from such a condition.



9 3 1 2 0 9 9 2 2 7 8

9.6.2.1 Occurrences. Breach of containment will result in spread of radioactive contamination. Over the years of B Plant fission products processing, minor contamination spreads within B Plant of less than gram quantities have far outnumbered any other type of occurrences. Since 1979, there have been 14 contamination occurrences, as reported in various occurrence reports, such as unusual occurrence, off-normal event, or radiation occurrence. The basic causes for these occurrences are segregated into the following general categories.

| Category | Number of occurrences | % of total |
|---|---|---|
| Personnel error | 4 | 28.6 |
| Procedure deficiency | 2 | 14.3 |
| Material deficiency | 4 | 28.6 |
| Design deficiency | 1 | 7.1 |
| Other | 3 | 21.4 |
| TOTAL | 14 | 100.0 |

Of these occurrences, indicated according to primary cause, 57% are related to either direct personnel error or material deficiency. To determine occurrence rates, an average number of operators and maintenance personnel is assumed to have been 80, based on employment figures for that time period.

$$\frac{14 \text{ contamination events}}{5 \text{ yr}} = 2.8 \text{ events/yr (5 yr average)}$$

$$\frac{2.8 \text{ events/yr}}{80 \text{ personnel/yr}} = 0.035 \text{ events/man-yr}$$

These events typically pose only minor impact to operations, and no environmental impact is expected. This number of contamination events might appear to be low for an operation such as that of B Plant. But, it should be considered that essentially all ultimate sources of the contamination are the process cells, and that these sources are not handled at all in areas normally expected to be essentially non-contaminated.

9.6.2.2 Accident Scenarios. Breach of containment consequences are addressed in all scenarios.

### 9.6.3 Radiation Exposure (Personnel Overexposure)

Radiation overexposure is caused by personnel exposure to radiation in excess of established guidelines (Ref. 9-4). There are no documented instances of B Plant personnel receiving a whole body dose in excess of maximum permissible exposure during normal fission products processing operations. Doses determined for B Plant operating and maintenance personnel were obtained from Radiological Engineering. Occasionally, a B Plant operator may be temporarily loaned to WESF, but any difference in dose will probably be less. Quarterly extracted data has been available only since January 1982, but annual data better reflects long-term trends. Aggressive pursuance by B Plant of the ALARA program clearly indicates that, although already historically low, work force average radiation dose continues generally to fall, as indicated in Table 9-3. This trend cannot be expected to continue indefinitely, because at some point in time, continued reduction will not be cost effective.

Radiation exposure consequences are addressed in all scenarios.

### 9.6.4 Personal Injury (Industrial Accidents)

As used here, an industrial accident is an accident having no radiological effects, but which results in personal injury or death. Analysis of the industrial injuries which occurred in B Plant from January 1, 1979, through December 31, 1983, as reflected in the various accident reports, indicates that 108 persons were injured by sustaining 22 types of injuries to 24 different parts of the body. Occurrences involved 153 "types-of-injury" situations to 120 "parts-of-the-body" situations. These two categories are not numerically identical, nor does either one equate to the number of persons injured, because several cases occurred in which one person sustained more than one type of injury and/or injury to more than one part of the body. Summaries of these two categories is shown in Tables 9-4 and 9-5.

9.6.4.1 Types of Injuries. The 22 types of injuries which occurred in B Plant to operations and maintenance personnel are tabulated in Table 9-4. Comparison of these categories reveals some interesting differences. "Bumping" and "cuts" are the only high-incidence (>10% of total) occurrences to both operations and maintenance personnel. Significant additional comparisons between the two groups are as follows:

| Injury | Operations | Maintenance |
|---|---|---|
| Bumping | 12.2% of total | 12.7% of total |
| Cut | 10.2% of total | 12.7% of total |
| Pinch | 3.1% of total | 9.1% of total |
| Slip | 9.2% of total | 3.6% of total |
| Strain | 7.1% of total | 10.9% of total |
| Struck by | 5.1% of total | 10.9% of total |
| Twist | 13.3% of total | 1.8% of total |

TABLE 9-3. B Plant Radiation Dose (mrem) for Operating Personnel.

| | 1980 | | 1981 | | 1982 | | 1983 | |
|---|---|---|---|---|---|---|---|---|
| | OPS | Maint. | OPS | Maint. | OPS | Maint. | OPS | Maint. |
| Penetrating | 29,394 | 13,380* | 21,726 | 8,704 | 37,788 | 4,788 | 30,044 | 4,284 |
| Non-penetrating | 10,304 | 8,070 | 16,422 | 10,016 | 12,998 | 10,857 | 10,788 | 3,248 |
| Average no. of workers | 46 | 30 | 51 | 32 | 67 | 21 | 58 | 28 |
| Average penetration dose per worker | 639 | 446* | 426 | 272 | 564 | 228 | 518 | 153 |
| Average non-penetration dose per worker | 224 | 269 | 322 | 313 | 194 | 517 | 186 | 116 |

*Repaired hot pipe trench.

9.6.4.2 Parts of Body Injured. The 24 parts of the body injured in B Plant are also tabulated into the same categories in Table 9-5 as in Table 9-4. Back injuries and injuries to fingers are the only high-incidence (>10% of total) injuries common to both operations and maintenance personnel. Interesting additional differences occur when comparing the two groups:

| Injury | Operations | Maintenance |
|---|---|---|
| Back | 10.8% of total | 15.9% of total |
| Fingers | 16.2% of total | 27.3% of total |
| Hands | 5.4% of total | 9.1% of total |
| Wrists | 4.1% of total | 11.4% of total |

The preceding information indicates obvious differences in types of injury sustained and part of the body affected by personnel working in operations or in maintenance. The most likely reason for this phenomena is the different types of work done by these two groups. Other work groups have not been considered here, because of the diverse types of work done by the relatively low number of personnel involved.

TABLE 9-4. Types of Injuries, 1-1-79 to 12-31-83

| Type of injury | Total | (%) | Operations | (%) | Maintenance | (%) |
|---|---|---|---|---|---|---|
| Abrasion | 8 | (5.2) | 5 | (5.1) | 3 | (5.5) |
| Bumping | 19 | (12.4) | 12 | (12.2) | 7 | (12.7) |
| Burn, Chemical | 5 | (3.3) | 4 | (4.1) | 1 | (1.8) |
| Burn, Heat/Flame | 10 | (6.5) | 5 | (5.1) | 5 | (9.1) |
| Cut | 17 | (11.1) | 10 | (10.2) | 7 | (12.7) |
| Dermatitis | 1 | (0.6) | | | 1 | (1.8) |
| Fall | 9 | (5.9) | 7 | (7.1) | 2 | (3.6) |
| Foreign Object | 3 | (2.0) | 1 | (1.0) | 2 | (3.6) |
| Fracture | 3 | (2.0) | 3 | (3.1) | | |
| Hernia | 1 | (0.6) | 1 | (1.0) | | |
| Inhalation, Chemical/Smoke | 2 | (1.3) | 2 | (2.0) | | |
| Insect Bite/Sting | 2 | (1.3) | 1 | (1.0) | 1 | (1.8) |
| Miscellaneous | 3 | (2.0) | 2 | (2.0) | 1 | (1.8) |
| Pinch | 8 | (5.2) | 3 | (3.1) | 5 | (9.1) |
| Puncture | 4 | (2.6) | 2 | (2.0) | 2 | (3.6) |
| Slip | 11 | (7.2) | 9 | (9.2) | 2 | (3.6) |
| Strain | 13 | (8.5) | 7 | (7.1) | 6 | (10.9) |
| Struck By | 11 | (7.2) | 5 | (5.1) | 6 | (10.9) |
| Trip | 4 | (2.6) | 3 | (3.1) | 1 | (1.8) |
| Twist | 16 | (10.5) | 13 | (13.3) | 3 | (5.5) |
| Vehicle | 2 | (1.3) | 2 | (2.0) | | |
| Whiplash | 1 | (0.6) | 1 | (1.0) | | |
| TOTAL | 153 | (99.9)* | 98 | (99.8)* | 55 | (99.8)* |

*Due to rounding.

TABLE 9-5. Parts of Body Injured, 1-1-79 to 12-31-83.

| Type of injury | Total | (%) | Operations | (%) | Maintenance | (%) |
|---|---|---|---|---|---|---|
| Ankle | 8 | (6.8) | 7 | (9.5) | 1 | (2.3) |
| Arms | 7 | (5.9) | 5 | (6.8) | 2 | (4.5) |
| Back | 15 | (12.7) | 8 | (10.8) | 7 | (15.9) |
| Chest | 4 | (3.4) | 2 | (2.7) | 2 | (4.5) |
| Ears | 1 | (0.8) | 1 | (1.4) | 0 | -- |
| Elbow | 4 | (3.4) | 4 | (5.4) | 0 | -- |
| Eyes | 3 | (2.5) | 1 | (5.4) | 2 | (4.5) |
| Face | 1 | (0.8) | 0 | -- | 1 | (2.3) |
| Feet | 4 | (3.4) | 3 | (4.1) | 1 | (2.3) |
| Fingers | 24 | (20.3) | 12 | (16.2) | 12 | (27.3) |
| Groin | 1 | (0.8) | 1 | (1.4) | 0 | -- |
| Hands | 8 | (6.8) | 4 | (5.4) | 4 | (9.1) |
| Head | 4 | (3.4) | 4 | (5.4) | 0 | -- |
| Hips | 1 | (0.8) | 1 | (1.4) | 0 | -- |
| Knees | 11 | (9.3) | 7 | (9.5) | 4 | (9.1) |
| Leg | 1 | (0.8) | 0 | -- | 1 | (2.3) |
| Mouth | 1 | (0.8) | 0 | -- | 1 | (2.3) |
| Neck | 4 | (3.4) | 4 | (5.4) | 0 | -- |
| Nose | 2 | (1.7) | 2 | (2.7) | 0 | -- |
| Ribs | 1 | (0.8) | 1 | (1.4) | 0 | -- |
| Shoulders | 2 | (1.7) | 2 | (2.7) | 0 | -- |
| Stomach | 1 | (0.8) | 0 | -- | 1 | (2.3) |
| Toes | 2 | (2.7) | 3 | (2.7) | 0 | -- |
| Wrists | 8 | (6.8) | 3 | (4.1) | 5 | (11.4) |
| TOTAL | 118 | (100.6)* | 74 | (100.4)* | 44 | (100.1)* |

*Due to rounding.

9.6.4.3 Accident Rates. Accident rate equals

$$\frac{\text{No. of accidents}}{\text{No. of yr}} = \frac{108}{5} = 21.6 \text{ accidents/yr}$$

Of these accidents, the types most likely to occur, and the parts of the body most likely affected, are as follows:

| Accident Aspects | Operations | Maintenance |
|---|---|---|
| Bumping | * | * |
| Burn, heat/flame | | * |
| Cut | * | * |
| Pinch | | * |
| Slip | * | |
| Strain | | * |
| Struck by | | * |
| Twist | * | |
| Ankle | * | |
| Back | * | * |
| Fingers | * | * |
| Hands | | * |
| Knees | * | * |
| Wrists | | * |

These events typically have posed only minor impact (see Table 9-3) on operations and systems, but these types of accidents have resulted in lost work days.

9.6.4.4 General Chemical Hazards. Although the particular chemicals used in B Plant have not historically been significant hazards, they have been evaluated in Appendix A. Nevertheless, if improperly handled, they can cause significant, harmful effects to personnel. Proper handling is defined and controlled by established administrative controls and engineered barriers. Exposure to non-radiological hazards is designed to be ALARA, per RHO-MA-100 (Ref. 9-39).

## 9.7 SCENARIOS OF POTENTIAL ACCIDENTS

The most significant scenarios postulated for B Plant accidents are presented in the following sections. These scenarios are based on the potential of the described accident consequences to exceed established guidelines. These scenarios are those which have been assessed by knowledgeable persons in Process Engineering, Operations, and Safety Analysis to result in potentially non-absorbable consequences by B Plant. The following table indicates the location of each scenario in the SAR.



9 3 1 2 8 9 9 2 2 8 4

| Scenario number | Scenario subject | Section in SAR |
|---|---|---|
| 1 | Natural forces consideration | 9.8 |
| 2 | Total loss of electrical power | 9.9 |
| 3 | Hydrogen accumulation and explosion | 9.10 |
| 4 | Ammonia accumulation and explosion | 9.11 |
| 5 | Fire | 9.12 |
| 6 | Vessel coil failure | 9.13 |
| 7 | Loss of cooling water | 9.14 |
| 8 | Loss of instrument or process compressed air | 9.15 |
| 9 | Temperature excursion | 9.16 |
| 10 | Cell drain line failure | 9.17 |
| 11 | Nitric acid misrouted to ion exchange column | 9.18 |
| 12 | Nitric acid bulk storage tank collapse | 9.19 |
| 13 | Anhydrous ammonia bulk storage tank collapse | 9.20 |
| 14 | Carbon dioxide bulk storage collapse | 9.21 |

These accident scenarios describe potentially non-absorbable accidents that are representative of those which could occur at B Plant. All identified hazards have been evaluated and determined to have adequate mitigating barriers. As this report is a "living document," potential hazards identified hereafter will be evaluated as they are identified, and added to subsequent revisions as required.

It is to be noted that all references in these scenarios to $^{90}Sr$ assumes an equilibrium mixture of $^{90}Sr$ and $^{90}Y$, and all references to $^{137}Cs$ assumes an equilibrium mixture of $^{137}Cs$ and $^{137}Ba$. A summary of the Hazards Identification and Evaluation is presented in Table 9-6.

TABLE 9-6. Hazards Identification and Evaluation. (Sheet 1 of 19)

| Potential accident | Inventory at risk | Potential consequences | Controls and barriers | Severity | Probability/ yr | Offsite risk | OSR |
|---|---|---|---|---|---|---|---|
| Seismic Event | | **INDUSTRIAL INJURY**<br>Yes | NOTE: A natural forces event may or may not cause a particular accident, per sé, because of emergency administrative procedures in effect. However, such an event can lead to multiple accidents, depending on relevant factors at the time. | | $3.3 \times 10^{-3}$ | | See Note |
| | 41 Mci $^{90}Sr$<br>29 MCi $^{137}Cs$ | **PERSONNEL EXPOSURE**<br>Possible, but expected to be minimal due to evacuation | **Engineered Barriers**<br>B Plant was not constructed against particular natural forces criteria, but is expected to withstand a certain degree of natural forces impact. Such aspects are discussed in this scenario. | NIL | $3.3 \times 10^{-3}$ | NIL | |
| | | **PERSONNEL CONTAMINATION**<br>Not expected | | NIL | $3.3 \times 10^{-3}$ | NIL | |
| | | **LOSS OF CONFINEMENT**<br>335 Ci $^{90}Sr$ to atmosphere<br>~15 Mci $^{90}Sr$ to soil<br>1.4 Ci $^{137}Cs$ to atmosphere<br>~4 Mci $^{137}Cs$ to soil<br>LOW HAZARD | | $4.1 \times 10^{0}$ rem 1st yr bone maximum total for all accidents in the scenario | $3.3 \times 10^{-3}$ | $1.4 \times 10^{-2}$ rem/yr<br>ACCEPTABLE RISK | |

TABLE 9-6. Hazards Identification and Evaluation. (Sheet 2 of 19)

| Potential accident | Inventory at risk | Potential consequences | Controls and barriers | Severity | Probability/yr | Offsite risk | OSR |
|---|---|---|---|---|---|---|---|
| Total Loss of Electrical Power | | **INDUSTRIAL INJURY** Not applicable, see Note | NOTE: Loss of electrical power will not cause a particular accident, per sé, because of emergency administrative procedures in effect. However, such a loss can lead to a particular accident, depending on relevant factors at the time. Refer to particular accidents for scenario development. | | $4.9 \times 10^{-2}$ | | See Note |
| | See Note | **PERSONNEL EXPOSURE** Not applicable, see Note | Engineered Preventives<br>1 Two primary power lines serve B Plant. Interrupted service on one line automatically transfers its service to the other<br>2 With loss of both primary power lines, a third line is available for manual tie-in | NIL | $4.9 \times 10^{-2}$ | NIL | |
| | | **PERSONNEL CONTAMINATION** Not applicable, see Note | | NIL | $4.9 \times 10^{-2}$ | NIL | |
| | | **LOSS OF CONFINEMENT** Not applicable, see Note | | NIL | $4.9 \times 10^{-2}$ | NIL | |

TABLE 9-6. Hazards Identification and Evaluation. (Sheet 3 of 19)

| Potential accident | Inventory at risk | Potential consequences | Controls and barriers | Severity | Probability/ yr | Offsite risk | OSR |
|---|---|---|---|---|---|---|---|
| $H_2$ Accumulation and Explosion (In-Tank), TK-7-2 ($^{90}Sr$) | | **INDUSTRIAL INJURY**<br>None likely | Administrative Controls<br>1. Operations not permitted during insufficient dilution air flow<br>2. Emergency operating procedures are in effect | | $2.3 \times 10^{-7}$ | | 11.4.1<br>11.4.6 |
| | 2,630 gal<br>18,940 K Ci<br>$^{90}Sr$ | **PERSONNEL EXPOSURE**<br>None | Engineered Barriers<br>1. $H_2$ dilution air is supplied to vessels to maintain $H_2$ at or below 2%<br>2. Backup electrical supply for air compressor operation<br>3. Portable, gasoline-driven compressors are available | NIL | $2.3 \times 10^{-7}$ | NIL | |
| | | **PERSONNEL CONTAMINATION**<br>Yes, but accident almost incredible | | $1.1 \times 10^{1}$ rem, 1st yr bone | $2.3 \times 10^{-7}$ | $2.5 \times 10^{-6}$ rem/yr | |
| | | **LOSS OF CONFINEMENT**<br>85.9 µCi $^{90}Sr$ to atmosphere<br>LOW HAZARD | | < 3 rem, 1st yr, bone | $2.3 \times 10^{-7}$ | $< 6.9 \times 10^{-7}$ rem/yr<br>ACCEPT-ABLE RISK | |

TABLE 9-6. Hazards Ide fication and Evaluation. (Sheet 4 of 19)

| Potential accident | Inventory at risk | Potential consequences | Controls and barriers | Severity | Probability/yr | Offsite risk | OSR |
|---|---|---|---|---|---|---|---|
| $H_2$ Accumulation and Explosion (In-Tank), TK-37-1 ($^{137}Cs$) | | **INDUSTRIAL INJURY**<br>None expected | Administrative Controls<br>1. Operations not permitted during insufficient dilution air flow<br>2. Emergency operating procedures are in effect | | $2.3 \times 10^{-7}$ | | 11.4.1<br>11.4.6 |
| | 1,660 gal<br>10,375 K Ci<br>$^{137}Cs$ | **PERSONNEL EXPOSURE**<br>None expected | Engineered Barriers<br>1. $H_2$ dilution air is supplied to vessels to maintain $H_2$ at or below 2%<br>2. Backup electrical supply for air compressor operation<br>3. Portable, gasoline-driven compressors are available<br>4. Extended time necessary for $H_2$ accumulation<br>5. Ventilation/exhaust system<br>6. VVS #1 | NIL | $2.3 \times 10^{-7}$ | NIL | |
| | | **PERSONNEL CONTAMINATION**<br>Yes, but accident almost incredible | | $1.6 \times 10^{-1}$ rem, 1st yr bone | $2.3 \times 10^{-7}$ | $3.7 \times 10^{-8}$ rem/yr | |
| | | **LOSS OF CONFINEMENT**<br>63.0 μCi $^{137}Cs$ to atmosphere<br>LOW HAZARD | | <3 rem, 1st yr, bone | $2.3 \times 10^{-7}$ | $<6.9 \times 10^{-7}$ rem/yr<br>ACCEPT-ABLE RISK | |

TABLE 9-6. Hazards Identification and Evaluation. (Sheet 5 of 19)

| Potential accident | Inventory at risk | Potential consequences | Controls and barriers | Severity | Probability/ yr | Offsite risk | OSR |
|---|---|---|---|---|---|---|---|
| $H_2$ Accumulation and Explosion (Full Cell), Cell 39 ($^{90}Sr$) | | **INDUSTRIAL INJURY**<br>Explosion effects if in vicinity of cell - possible major injury Not credible | Administrative Controls<br>1 Operations not permitted during insufficient dilution air flow<br>2. Emergency operating procedures are in effect | | $9.2 \times 10^{-14}$ | | 11.4.1<br>11.4.6 |
| | 3 gal<br>26 K Ci<br>$^{90}Sr$ | **PERSONNEL EXPOSURE**<br>None expected | Engineered Barriers<br>1. Ventilation/exhaust system<br>2. Dilution air is installed to all vessels which can contain $H_2$-evolving solutions<br>3 If power is lost, air compressors operate on backup power supply<br>4. Portable gasoline-driven compressors are available if total power is lost<br>5 VVS #1 | NIL | $9.2 \times 10^{-14}$ | NIL | |
| | | **PERSONNEL CONTAMINATION**<br>Possible, but none expected | | NIL | $9.2 \times 10^{-14}$ | NIL | |
| | | **LOSS OF CONFINEMENT**<br>$3.2 \times 10^{-1}$ µCi $^{90}Sr$ to atmosphere<br>LOW HAZARD | | $1.3 \times 10^{-3}$ rem, 1st yr, bone | $9.2 \times 10^{-14}$<br>ACCIDENT IS NOT CREDIBLE | $1.2 \times 10^{-10}$ rem/yr<br>ACCEPT-ABLE RISK | |

TABLE 9-6. Hazards Identification and Evaluation. (Sheet 6 of 19)

| Potential accident | Inventory at risk | Potential consequences | Controls and barriers | Severity | Probability/ yr | Offsite risk | OSR |
|---|---|---|---|---|---|---|---|
| $H_2$ Accumulation and Explosion (Full Cell), Cell 37 ($^{137}Cs$) | | **INDUSTRIAL INJURY**<br>Explosion effects if in vicinity of cell - possible major injury. Not credible | Administrative Controls<br>1. Operations not permitted during insufficient dilution air flow<br>2 Emergency operating procedures are in effect | | $9.2 \times 10^{-14}$ | | 11.4.1<br>11.4.6 |
| | 1,660 gal<br>10,375 K Ci<br>$^{137}Cs$ | **PERSONNEL EXPOSURE**<br>None expected | Engineered Barriers<br>1. Ventilation/exhaust system<br>2 Dilution air is installed to all vessels which can contain $H_2$-evolving solutions<br>3. If power is lost, air compressors operate on backup power supply<br>4 Portable gasoline-driven compressors are available if total power is lost<br>5. VVS # 1 | NIL | $9.2 \times 10^{-14}$ | NIL | |
| | | **PERSONNEL CONTAMINATION**<br>Possible, but none expected | | NIL | $9.2 \times 10^{-14}$ | NIL | |
| | | **LOSS OF CONFINEMENT**<br>$2.3 \times 10^{-4}$ µCi $^{137}Cs$ to atmosphere<br>LOW HAZARD | | $1.8 \times 10^{-5}$ rem, 1st yr, bone | $9.2 \times 10^{-14}$<br>ACCIDENT IS NOT CREDIBLE | $1.7 \times 10^{-18}$ rem/yr<br>ACCEPT-ABLE RISK | |

TABLE 9-6. Hazards Identification and Evaluation. (Sheet 7 of 19)

| Potential accident | Inventory at risk | Potential consequences | Controls and barriers | Severity | Probability/ yr | Offsite risk | OSR |
|---|---|---|---|---|---|---|---|
| $NH_3$ Accumulation and Explosion (In-Tank) TK-19-1 ($^{137}Cs$) | | **INDUSTRIAL INJURY**<br>Explosion effects if in vicinity of cell - possible major injury | Administrative Controls<br>1. $NH_3$-containing solutions are kept < 39°C, assuring < 15% concentration in the vapor space of vessels<br>2. $NH_3$ concentration kept below that required for flammability at any temperature<br>3. Electrically operated equipment is shut off and maintenance is not permitted if purge air is lost<br>4. Emergency operating procedures | | $5.3 \times 10^{-7}$ | | 11.4.2<br>11.4.6 |
| | 2,000 gal<br>600 K Ci<br>$^{137}Cs$ | **PERSONNEL EXPOSURE**<br>Not applicable | Engineered Barriers<br>1 Dilution air is installed to all $NH_3$-containing vessels<br>2. If power is lost, air compressors operate on backup power supply<br>3. Portable, diesel-driven compressors are available if all power loss<br>4 VVS #2 | NIL | $5.3 \times 10^{-7}$ | NIL | |
| | | **PERSONNEL CONTAMINATION**<br>Yes, but accident incredible | | $7.0 \times 10^{-3}$ rem, 1st yr, bone | $5.3 \times 10^{-7}$ | $3.7 \times 10^{-9}$ rem/yr | |
| | | **LOSS OF CONFINEMENT**<br>$3 \times 10^{0}$ µCi $^{137}Cs$ to atmosphere<br>LOW HAZARD | | < 3 rem, 1st yr, bone | $5.3 \times 10^{-7}$ | $< 1.6 \times 10^{-6}$ rem/yr<br>ACCEPT-ABLE RISK | |

TABLE 9-6. Hazards Identification and Evaluation. (Sheet 8 of 19)

| Potential accident | Inventory at risk | Potential consequences | Controls and barriers | Severity | Probability/ yr | Offsite risk | OSR |
|---|---|---|---|---|---|---|---|
| $NH_3$ Accumulation and Explosion (Full Cell) TK-19-1 ($^{137}Cs$) | | **INDUSTRIAL INJURY**<br>Explosion effects if in vicinity of cell - possible major injury. Not credible except by seismic event | Administrative Controls<br>1. $NH_3$-containing solutions are kept < 39°C, assuring < 15% concentration in the vapor space of vessels<br>2. $NH_3$ concentration in vessels kept below that required for flammability at any temperature<br>3. Ignition sources of sufficient power are not permitted to be present<br>4. Electrically operated equipment is shut off and maintenance is not permitted if vessel-purge air is lost<br>5. Emergency operating procedures are in effect | | $9.2 \times 10^{-12}$ | | 11.4.2<br>11.4.6 |
| | 2,000 gal<br>600 K Ci<br>$^{137}Cs$ | **PERSONNEL EXPOSURE**<br>Not applicable | Engineered Barriers<br>1. Ventilation/exhaust system<br>2. Dilution air is installed to all $NH_3$-containing vessels<br>3. If power is lost, air compressors operate on backup power supply<br>4. Portable, gasoline-driven compressors are available if total power loss<br>5. VVS #2 | NIL | $9.2 \times 10^{-12}$ | NIL | |
| | | **PERSONNEL CONTAMINATION**<br>Possible, but none expected | | $7.0 \times 10^{-2}$ rem, 1st yr, bone | $9.2 \times 10^{-12}$ | $6.4 \times 10^{-13}$ rem/yr | |
| | | **LOSS OF CONFINEMENT**<br>$1.1 \times 10^{3}$ µCi $^{137}Cs$ to atmosphere<br>LOW HAZARD | | < 3 rem, 1st yr, bone | $9.2 \times 10^{-12}$<br>ACCIDENT IS NOT CREDIBLE | $< 2.8 \times 10^{-11}$ rem/yr<br>ACCEPT-ABLE RISK | |

TABLE 9-6. Hazards Identification and Evaluation. (Sheet 9 of 19)

| Potential accident | Inventory at risk | Potential consequences | Controls and barriers | Severity | Probability/ yr | Offsite risk | OSR |
|---|---|---|---|---|---|---|---|
| Fire in Cell (Cell 27) | | **INDUSTRIAL INJURY**<br>None expected | Administrative Controls<br>1 Crane inspection and maintenance requirements<br>2 Crane operator training and certification requirements<br>3. Canyon housekeeping requirements<br>4. HEPA filter requirements<br>5 Emergency operating procedures are in effect | | $3.0 \times 10^{-6}$ | | 11.4.3<br>11.4.5<br>11.4.6 |
| | 3,000 Ci $^{90}Sr$ in organic liquid and 17,200 Ci each of $^{90}Sr$ and $^{137}Cs$ on HEPA filters | **PERSONNEL EXPOSURE**<br>Not applicable | Engineered Barriers<br>1. Fire-resistant HEPA filters<br>2 Fire screen installed before each HEPA filter stage<br>3 Continuous air sampling and monitoring of the exhaust air<br>4 Operable water and foam fire-suppression systems<br>5 Installed heat detectors<br>6. Audible and visible alarms | NIL | $3.0 \times 10^{-6}$ | NIL | |
| | | **PERSONNEL CONTAMINATION**<br>None expected | | NIL | $3.0 \times 10^{-6}$ | NIL | |
| | | **LOSS OF CONFINEMENT**<br>35 2 Ci $^{90}Sr$<br>35 1 Ci $^{137}Cs$ to atmosphere<br>LOW HAZARD | | $1.5 \times 10^{0}$ rem, 1st yr, bone | $3.0 \times 10^{-6}$ | $4.5 \times 10^{-6}$ rem/yr<br>ACCEPT-ABLE RISK | |

TABLE 9-6. Hazards Identification and Evaluation. (Sheet 10 of 19)

| Potential accident | Inventory at risk | Potential consequences | Controls and barriers | Severity | Probability/ yr | Offsite risk | OSR |
|---|---|---|---|---|---|---|---|
| Vessel Coil Failure (Heating and Cooling Service) | | **INDUSTRIAL INJURY**<br>None expected | Administrative Controls<br>1. QA inspection of equipment<br>2. Operability tests<br>3. Hydrostatic tests | | $1.4 \times 10^{-6}$ | | 11.4.4<br>11.4.6 |
| | 14,400 gal BCS<br>475 Ci $^{90}Sr$ and 2,400 Ci $^{137}Cs$ | **PERSONNEL EXPOSURE**<br>NIL | Engineered Barriers<br>1. Liquid level and specific gravity instrumentation<br>2. VVS #2<br>3. Vacuum indicators on concentrators<br>4. Radiation monitors on E-20-3 condenser and BCS tanks<br>5. Automatic alarms in dispatcher's office | NIL | $1.4 \times 10^{-6}$ | NIL | |
| | | **PERSONNEL CONTAMINATION**<br>NIL | | NIL | $1.4 \times 10^{-6}$ | NIL | |
| | | **LOSS OF CONFINEMENT**<br>NIL<br>LOW HAZARD | | NIL | $1.4 \times 10^{-6}$ | NIL<br>ACCEPT-ABLE RISK | |

TABLE 9-6. Hazards Identification and Evaluation. (Sheet 11 of 19)

| Potential accident | Inventory at risk | Potential consequences | Controls and barriers | Severity | Probability/ yr | Offsite risk | OSR |
|---|---|---|---|---|---|---|---|
| Vessel Coil Failure (Cooling Service Only) | | **INDUSTRIAL INJURY**<br>Not applicable | Administrative Controls<br>1 QA inspection of equipment<br>2 Operability tests<br>3 Steam and air services are not connected to tanks requiring cooling service only | | $5.4 \times 10^{-9}$ | | 11.4.4<br>11.4.6 |
| | $^{90}Sr$ TK-39-5<br>1,634 gal<br>18,000 K Ci<br>----------<br>$^{137}Cs$ TK-39-3<br>326 gal<br>13,000 K Ci | **PERSONNEL EXPOSURE**<br>Yes; only that from Cs exceeds guidelines, but the accident is incredible | Engineered Barriers<br>1. Liquid level and specific gravity instrumentation<br>2. Radiation detection instrumentation<br>3. Automatic radiation alarms in cooling water effluent lines<br>4. Manual isolation of affected vessels from sewer subheader | $^{90}Sr$ 0.5 rem, 1st yr, bone<br>----------<br>$^{137}Cs$ 93 rem, 1st yr, overall | $5.4 \times 10^{-9}$<br>ACCIDENT IS NOT CREDIBLE | $^{90}Sr$ $2.7 \times 10^{-9}$ rem/yr<br>----------<br>$^{137}Cs$ $5.0 \times 10^{-7}$ rem/yr | |
| | | **PERSONNEL CONTAMINATION**<br>Not applicable | | NIL | $5.4 \times 10^{-9}$ | NIL | |
| | | **LOSS OF CONFINEMENT**<br>$4.6 \times 10^{-4}$ Ci $^{90}Sr$ or $1.7 \times 10^{-3}$ Ci $^{137}Cs$<br>LOW HAZARD | | $^{90}Sr$ $5.8 \times 10^{-4}$ rem, 1st yr, bone<br>----------<br>$^{137}Cs$ $3.9 \times 10^{-5}$ rem, 1st yr, bone | $5.4 \times 10^{-9}$<br>ACCIDENT IS NOT CREDIBLE | $^{90}Sr$ $3.1 \times 10^{-12}$ rem/yr<br>----------<br>$^{137}Cs$ $2.1 \times 10^{-13}$ rem/yr<br>ACCEPTABLE RISK | |

TABLE 9-6. Hazards Identification and Evaluation. (Sheet 12 of 19)

| Potential accident | Inventory at risk | Potential consequences | Controls and barriers | Severity | Probability/ yr | Offsite risk | OSR |
|---|---|---|---|---|---|---|---|
| Loss of Cooling Water | | **INDUSTRIAL INJURY**<br>Not applicable | Administrative Controls<br>1. Emergency operating procedures are in effect | | $2.6 \times 10^{-8}$ | | 11.4.6 |
| | $^{90}Sr$ TK-7-1<br>4,900 gal<br>19,000 K Ci<br>----------<br>$^{137}Cs$ TK-37-1<br>4,000 gal<br>10,500 K Ci | **PERSONNEL EXPOSURE**<br>Not expected | Engineered Barriers<br>1. Two emergency wells powered by diesel-driven pumps<br>2. Raw water header can be supplied by the sanitary water header via manual connections<br>3. Primary pump stations equipped with steam-driven pumps if electrical power fails<br>4. Two primary water supply lines<br>5. 3,000,000-gal reservoir in 200 East area<br>6. Either end of the raw water supply loop can handle emergency requirements | NIL | $2.6 \times 10^{-8}$ | NIL | |
| | | **PERSONNEL CONTAMINATION**<br>Not expected | | NIL | $2.6 \times 10^{-8}$ | NIL | |
| | | **LOSS OF CONFINEMENT**<br>$5 \times 10^{-4}$ Ci $^{90}Sr$<br>$1 \times 10^{-14}$ Ci $^{137}Cs$ to atmosphere<br>LOW HAZARD | | < 3 rem, 1st yr | $2.6 \times 10^{-8}$<br>ACCIDENT IS NOT CREDIBLE | $< 7.8 \times 10^{-8}$<br>ACCEPT-ABLE RISK | |

TABLE 9-6. Hazards Identification and Evaluation. (Sheet 13 of 19)

| Potential accident | Inventory at risk | Potential consequences | Controls and barriers | Severity | Probability/ yr | Offsite risk | OSR |
|---|---|---|---|---|---|---|---|
| Loss of Instrument or Process Compressed Air | | **INDUSTRIAL INJURY**<br>Not applicable | Administrative Controls<br>1. All processing operations will be suspended<br>2. All electric motors located where $H_2$ generation is possible will be shut down and will not be restarted for a specific time after dilution air has been restarted<br>3. Remote maintenance in process cells will be suspended<br>4 Emergency operating procedures will be in effect | | $2.6 \times 10^{-4}$ | | 11.4.6 |
| | 12.5 K Ci $^{137}Cs$ solution | **PERSONNEL EXPOSURE**<br>Up to 32,000 R/hr, but CAMS are expected to provide adequate evacuation time before this rate is actually experienced | Engineered Barriers<br>1 Relevant compressors are fed by emergency power<br>2. With total loss of electric power, the standby diesel-driven compressor starts automatically<br>3. The process air system is equipped with redundant compressors<br>4 If the instrument air system fails, it automatically draws from the process air system<br>5. Diaphragm-operated valves fail safe<br>6 Primary ventilation exhaust dampers fail safe | 540 rem, 1st yr/ overall | $2.6 \times 10^{-4}$ | $1.4 \times 10^{-1}$ rem/yr | |
| | | **PERSONNEL CONTAMINATION**<br>Not applicable | | NIL | $2.6 \times 10^{-4}$ | NIL | |
| | | **LOSS OF CONFINEMENT**<br>Not applicable<br>LOW HAZARD | | NIL | $2.6 \times 10^{-4}$ | NIL<br>ACCEPTABLE RISK | |

TABLE 9-6. Hazards Identification and Evaluation. (Sheet 14 of 19)

| Potential accident | Inventory at risk | Potential consequences | Controls and barriers | Severity | Probability/ yr | Offsite risk | OSR |
|---|---|---|---|---|---|---|---|
| Temperature Excursion | | **INDUSTRIAL INJURY**<br>Not applicable | Administrative Controls<br>1. The centrifuge operation is not started unless it can be completed without delay<br>2. No more than 2,000 gal of CAW slurry is processed through the centrifuge before removal of the precipitate | | $1.9 \times 10^{-3}$ | | 11.4.6 |
| | 200 gal of centrifuge slurry:<br><br>7 Ci Pu<br>78 Ci Am<br>$4.4 \times 10^{-4}$ Ci U<br>0.2 Ci Np<br>$2.7 \times 10^{3}$ Ci Sr<br>$2 \times 10^{6}$ Ci TRE<br>$3 \times 10^{5}$ Ci Ru | **PERSONNEL EXPOSURE**<br>Not applicable | Engineered Barriers<br>1. Volume measurement instruments | NIL | $1.9 \times 10^{-3}$ | NIL | |
| | | **PERSONNEL CONTAMINATION**<br>Not applicable | | NIL | $1.9 \times 10^{-3}$ | NIL | |
| | | **LOSS OF CONFINEMENT**<br>No species is released > Table II values<br>LOW HAZARD | | < 3 rem, 1st yr, bone | $1.9 \times 10^{-3}$ | $< 5.7 \times 10^{-3}$ rem/yr<br><br>ACCEPT-ABLE RISK | |

TABLE 9-6. Hazards Identification and Evaluation. (Sheet 15 of 19)

| Potential accident | Inventory at risk | Potential consequences | Controls and barriers | Severity | Probability/ yr | Offsite risk | OSR |
|---|---|---|---|---|---|---|---|
| Cell Drain Line Failure | | **INDUSTRIAL INJURY**<br>Not applicable | Administrative Controls:<br>1 New transfer routes are leak checked before use<br>2 Cell drain line integrity is determined quarterly<br>3 Volume of solution in process vessels is limited to 80% of maximum capacity<br>4 Solution transfer volumes are verified at both ends of the transfer<br>5 When cell cover blocks are removed, a visual inspection is made for evidence of leaks. They are corrected if found | | $3.5 \times 10^{-4}$ | | None |
| | 150 gal of $^{90}Sr$ solution 1.2 MCi | **PERSONNEL EXPOSURE**<br>Below background | Engineered Barriers<br>1. Leak detectors are installed in cell drain openings, and audibly alarm<br>2. High-level alarms are installed on all tanks | NIL | $3.5 \times 10^{-4}$ | NIL | |
| | | **PERSONNEL CONTAMINATION**<br>Not applicable | | NIL | $3.5 \times 10^{-4}$ | NIL | |
| | | **LOSS OF CONFINEMENT**<br>Yes, but entire quantity trapped in soil, no effect on individuals<br>LOW HAZARD | | NIL | $3.5 \times 10^{-4}$ | NIL<br>ACCEPTABLE RISK | |

TABLE 9-6. Hazards Identification and Evaluation. (Sheet 16 of 19)

| Potential accident | Inventory at risk | Potential consequences | Controls and barriers | Severity | Probability/ yr | Offsite risk | OSR |
|---|---|---|---|---|---|---|---|
| Nitric Acid Misrouted to Ion Exchange Column | | INDUSTRIAL INJURY<br>Not applicable | Administrative Controls<br>1. Checks are required to verify appropriate connections when setting up a route | | 1 | | None |
| | 3 M Ci $^{137}Cs$ | PERSONNEL EXPOSURE<br>Not expected | | NIL | 1 | NIL | |
| | | PERSONNEL CONTAMINATION<br>Not expected | | NIL | 1 | NIL | |
| | | LOSS OF CONFINEMENT<br>Not expected<br>LOW HAZARD | | NIL | 1 | NIL<br>ACCEPT-ABLE RISK | |

TABLE 9-6. Hazards Identification and Evaluation. (Sheet 17 of 19)

| Potential accident | Inventory at risk | Potential consequences | Controls and barriers | Severity | Probability/ yr | Offsite risk | OSR |
|---|---|---|---|---|---|---|---|
| Nitric Acid Bulk Storage Tank Collapse | | **INDUSTRIAL INJURY**<br>Acid splash to worker | Administrative Controls<br>1 Approved procedures | | $1.0 \times 10^{-5}$ | | None |
| | 18,000 gal of 57% $HNO_3$ | **PERSONNEL EXPOSURE**<br>Not applicable | | | | | |
| | | **PERSONNEL CONTAMINATION**<br>Not applicable | | | | | |
| | | **LOSS OF CONFINEMENT**<br>Nitric acid 0.13 ppm<br>$CO_2$ 17.0 ppm<br>$NO_x$ 0.06 ppm<br>LOW HAZARD | | < TWA values | $1.0 \times 10^{-5}$ | ACCEPT-ABLE | |

TABLE 9-6. Hazards Identification and Evaluation. (Sheet 18 of 19)

| Potential accident | Inventory at risk | Potential consequences | Controls and barriers | Severity | Probability/ yr | Offsite risk | OSR |
|---|---|---|---|---|---|---|---|
| Anhydrous Ammonia Bulk Storage Tank Collapse | | **INDUSTRIAL INJURY**<br>Asphyxiation | Administrative Controls<br>1. Approved operating procedures | | $1.0 \times 10^{-6}$ | | None |
| | 40,000 lb | **PERSONNEL EXPOSURE**<br>Not applicable | Engineered Barriers<br>1. Tank accessed only by a service road spur<br>2. Physical barriers around tank | | | | |
| | | **PERSONNEL CONTAMINATION**<br>Not applicable | | | | | |
| | | **LOSS OF CONFINEMENT**<br>25 to 800 ppm<br>LOW HAZARD | | < to >IDLH values | $1.0 \times 10^{-6}$ | ACCEPT-ABLE | |

TABLE 9-6. Hazards Identification and Evaluation. (Sheet 19 of 19)

| Potential accident | Inventory at risk | Potential consequences | Controls and barriers | Severity | Probability/ yr | Offsite risk | OSR |
|---|---|---|---|---|---|---|---|
| Liquid Carbon Dioxide Bulk Storage Tank Collapse | | **INDUSTRIAL INJURY**<br>Asphyxiation | Administrative Controls<br>1 Approved operating procedures | | $1.0 \times 10^{-5}$ | | None |
| | 12,000 lb | **PERSONNEL EXPOSURE**<br>Not applicable | Engineered Barriers<br>1. Tank accessed only by a service road spur | | | | |
| | | **PERSONNEL CONTAMINATION**<br>Not applicable | | | | | |
| | | **LOSS OF CONFINEMENT**<br>1,300 ppm<br>LOW HAZARD | | <TWA values | $1.0 \times 10^{-5}$ | ACCEPT-ABLE | |

## 9.8 NATURAL EVENTS CONSIDERATIONS

The 221-B Canyon Building was built in 1943 in conformance with lesser seismic criteria than imposed upon structures of its type constructed today. There has not been a seismic analysis performed on B Plant, but a preliminary seismic analysis has been conducted on 221-T, a structure constructed at the same time as 221-B, and which is essentially identical. It is estimated that 221-B Canyon Building will safely withstand at least a 0.15 g earthquake (Ref. 9-7), or a 1/2 SSE (0.125 g earthquake).

Natural forces survivability of B Plant has been preliminarily established, and the degree of survivability has been illustrated using two somewhat different scales of assessment (Ref. 9-8, 9-9) These two references consider basically the same structures and facilities, although there are some differences. The rating scales used are compared in Table 9-7.

TABLE 9-7. Probability of Survival.

| Rating | Reference 9-8 | Reference 9-9 |
|---|---|---|
| Safe | - | 100% - meets present code requirements |
| High | >90% | 75-99% - barely meets code requirements; may be local failure; total failure not expected |
| Medium | ≥50% to ≤90% | 50-74% - cannot meet code requirements - local, but not total, failure expected; may remain partly functional |
| Low | <50% | 25-49% - structural survivability questionable; loss of function expected |
| Unsafe | - | <25% - very low safety factor; certain loss of function |

In intermeshing these two scales, when discussing natural forces hazards below, the scale adopted is as follows:

| Rating | Approximate % survivability | Remarks |
|---|---|---|
| High (H) | >90 | May be local failure; total failure not expected |
| Medium (M) | ≥50 to ≤90 | Local failure expected; may remain partly functional |
| Low (L) | <50 | Survivability questionable, loss of function expected |

Table 9-8 shows expected estimated survivability of various B Plant structures. When estimates between the two references are clearly divergent, the estimate only from the more detailed information is considered; when detail is not significantly varying, worst case is indicated.

### 9.8.1 Tornado Considerations

B Plant survivability from a design basis tornado (DBT) or its generated missiles is generally judged to be somewhat lower than in the case of an earthquake, especially an SSE, except in a few cases. The main canyon structure is expected to survive a DBT or its missiles, but supporting structures and systems are less fortunate.

Except for nonessential supporting structures (short term) and where data has been obtained, most structures probably have a better than 50% chance of surviving a DBT. The main exception to this statement are the ventilation supply and exhaust equipment. Most major supporting systems are indicated as probably not surviving a DBT. The main low-survival facilities from a DBT-generated missile are the sheet-metal above-grade structures, so far as is indicated from existing data. See Table 9-8.

### 9.8.2 Volcanic Ash Considerations

Renewed volcanic eruptions from Mt. St. Helens or other potentially active peaks are possible. However, early notification by the National Attack Warning System (NAWAS) should provide two to six hours for implementation of protective actions. Public address, crash alarm, and priority message systems can be used to effect in-plant notification.

### 9.8.3 Range Fire Considerations

In the summer of 1984, a major range fire occurred, which burned 200,000 acres, and encroached upon the 200 Areas. Emergency organizations were utilized effectively to prevent the spread of the fire to the proximity of any major facility. It is expected that the same efforts and results would pertain in any future occurrences of this type. During the past ten years, three other fires have burned an area as large as the BC Crib-controlled area. For B Plant and its auxiliary buildings, the probability of a direct fire is considered remote.

### 9.8.4 Seismic Event

In view of the variances in reported data, stemming from the fact that there has not been a detailed seismic study conducted for B Plant, it appears that B Plant might be assumed to have an overall survival probability of 50% to 75% for a 1/2 SSE (0.125 g), with possible exceptions

TABLE 9-8. Estimated Survivability of Various B Plant Structures and Systems. (Sheet 1 of 2)

| Structure or system | Estimated Functional Survivability | | | |
|---|---|---|---|---|
| | HRHE (0.10 g) | SSE (0.25 g) | 175 mph tornado | Tornado missile |
| 211-B Tank Farm[b] | | | | |
| Tank (9 ft dia. x 36 ft long) | M | L | Full - M<br>Empty - L | H |
| Tank (10 ft dia. x 10 ft high) | L | L | Full - H<br>Empty - L | H |
| Tank Piping | L | L | M | M |
| Platform | L | L | L | M |
| 212-B Cask Station | | | | |
| Below-grade cell and gallery | H | H | H | H |
| Above-grade structure | H | M | L | M[b] |
| Structure additions | NA* | NA* | L | L |
| Ventilation supply | M | L | L | NA |
| 217-B Demineralizer Building[a] | H | H | L | NA |
| 221-B Canyon Structure[a] | H | M | H | NA |
| Ventilation Supply | M | L | L | NA |
| Gallery Supply and Exhaust | M | L | L | NA |
| 221-BB Process Condensate[a] Sample Tanks Confinement | M | L | L | NA |
| 221-BF Effluent Control[a] | M | L | L | NA |
| 291-B Stack | M | L | M | H |

[a]Reference 9-8 only.

[b]Reference 9-9 only.

*NA = Not analyzed.

TABLE 9-8. Estimated Survivability of Various B Plant Structures and Systems. (Sheet 2 of 2)

| Structure or system | Estimated Functional Survivability | | | |
|---|---|---|---|---|
| | HRHE (0.10 g) | SSE (0.25 g) | 175 mph tornado | Tornado missile |
| Air tunnels[a] | H | H | H | H |
| Sand filter[a] | M | L | M | NA |
| 291-BB and 291-BC, first and second filter cells | H | H | H | NA |
| 291-BD Third Filter Cell | | | | |
| Below-grade structure | H | H | H | H |
| Above-grade structure | H | M | L | L |
| 291-BF fourth filter cell | H | M | H | NA |
| 291-BG fifth filter cell | H | H | H | H |
| 292-B Stack Monitoring[b] | L | L | L | L |
| Electrical Power System[a] | M | L | L | NA |
| Raw Water System[a] | M | L | L | NA |
| Fire Protection System[a] | M | L | L | NA |
| Cooling Water System[a] | M | L | L | NA |
| Compressed Air System[a] | M | L | L | NA |
| Vessel Vent Systems[a] | M | L | L | NA |
| Control Panels[a] | M | L | L | NA |
| Radiation Monitoring System[d] | | | | |
| Personnel Protection | M | L | L | NA |
| Environmental Protection | M | L | L | NA |

being the tank farm and stack monitoring system, which probably have a lower survivability rating. A higher overall probability assessment, if it exists, must await the results of a detailed seismic analysis. The highest expected probability of a 1/2 SSE is $3.3 \times 10^{-3}$/yr, or once every 300 yr (Ref. 9-10).

One seismic event can cause one or several of the accidents described; unavailability of detailed seismic information precludes a quantitative assessment of the seismic-caused likelihood of these events relative to each other. It appears likely that B Plant can be safely shut down after the occurrence of a 1/2 SSE. Either the operating systems should have sufficient capacity to allow such an action, or the magnitude of the consequences should be sufficiently low to preclude major effects.

Tentative conclusions cannot be drawn in the event of an SSE. If only a few supporting structures and/or operating systems escape survival, perhaps sufficient recovery will be possible for a safe shutdown. However, the maximum expected occurrence for an SSE is $8.3 \times 10^{-4}$/yr, or once every $1.2 \times 10^{3}$ yr (Ref. 9-10), which is a probability 25% that of the 1/2 SSE.

9.8.4.1 Cause and Sources. It is postulated that a seismic event occurs with a magnitude in excess of 0.125 g (1/2 SSE). Worst case assumptions are as follows:

- All primary and backup electrical power is lost due to fallen power poles
- All steam supply is lost due to general disruption of the 200-E Area steam distribution system
- All primary and backup raw water supply is lost due to disruption of all raw water supply lines
- All sanitary water is lost due to disruption of the sanitary water lines and collapse of the water tower. This loss also dictates loss of demineralized water generation
- The entire canyon roof collapses, as well as portions of the canyon walls. For "worst case" postulations, falling debris causes cover-block damage/destruction in such locations and manners as to produce the effects as described additionally
- All storage tanks in Cell 36 are full
- The falling roof, crane, and wall break the cover blocks of Cell 36, causing, in turn, the destruction of one tank, with the contents being dispositioned as follows: 25% remains in tank, 50% drains to Cell 10, 25% drains into the ground as a result of the failed 24 in. cell drain line
- A hydrogen explosion occurs in one of the tanks in Cell 36

- The remaining storage tank in Cell 36 boils dry

- Contained inventory is postulated to be as follows:

  - Hydrogen explosion in strontium tank

    TK-36-1 (Cs) 3,200 gal, 14,300 KCi (ruptured)
    TK-36-2 (Cs) 3,200 gal, 14,300 KCi (boils dry)
    TK-36-3 (Sr) 10 gal, 87 KCi ($H_2$ explosion)

  - Hydrogen explosion in cesium tank

    TK-36-1 (Cs) 3,200 gal, 14,300 KCi (boils dry)
    TK-36-2 (Cs) 200 gal, 8,000 KCi ($H_2$ explosion)
    TK-36-3 (Sr) 3,200 gal, 9,900 KCi (ruptured)

- The roof and wall collapsing in the vicinity of Cells 5 through 9 cause failure of those coverblocks, which fall and rupture all vessels in those cells. Fifty percent of the contents drain to Cell 10 and 25% seeps into the soil via the breached cell drain header. In addition, TK-10-1 is filled with sufficient debris for the tank to lose half its effective volumetric capacity

- The disposition of the relevant tanks is as follows:

  TK-5-1 (Sr) 400 gal, 400 KCi
  E-5-2 (Sr) empty
  E-5-3 (Sr) empty
  TK-6-1 (Sr) 4,000 gal, 4,000 KCi
  TK-6-2 (Sr) 4,000 gal, 4,000 KCi
  TK-7-1 (Sr) 4,000 gal, 4,000 KCi
  TK-7-2 (Sr) 4,000 gal, 4,000 KCi
  TK-8-1 (Sr) 4,000 gal, 4,000 KCi
  TK-8-2 (Sr) 4,000 gal, 4,000 KCi
  TK-9-1 (Sr) 4,000 gal, 20 KCi
  TK-9-2 (Sr) 4,000 gal, 48 KCi
  TK-10-1 (Sr) 1,000 gal, heel, 1,000 KCi

- Broken coverblocks fall into Cell 27, causing an organic fire, releasing significant contamination into the canyon and, due to breach of the canyon, into the atmosphere

- The main stack breaks up and falls across the various exhaust HEPA filter cells, making them unusable

9 3 1 2 8 9 9 2 3 1 2

- All tanks in the B Plant tank farm are toppled from their supports and spill 75% of the contents of each tank onto the ground, except for anhydrous ammonia (see Section 9.20) and liquid carbon dioxide. The ammonia and carbon dioxide spew forcibly into the air. Inventories of the tanks are as follows:

  Nitric acid (57%) - 14,000 gal
  Ammonia (anhydrous liquid) - 40,000 lb
  Ammonium carbonate (4M) - 11,500 gal
  EDTA (39%) - 4,500 gal
  HEDTA (41%) - 4,500 gal
  Hydroxyacetic acid (70%) - 4,500 gal
  Sodium hydroxide (50%) - 33,500 gal
  Carbon dioxide (Liquid) - 12,000 lb

- Ten days will be required to remove enough debris to restore sufficient utilities to begin efforts toward acquiring minimum acceptable safety considerations

9.8.4.2 Energy Release.

9.8.4.2.1 Hydrogen Explosion in TK-36-3.

- TK-36-1 (Cs), containing 3,200 gal (14,300 KCi) is destroyed. 3,575 KCi remains in the tank, 2,400 gal or 10,725 KCi drains to the cell, and then into the soil or to Cell 10.

- TK-36-2 (Cs), containing 3,200 gal (14,300 KCi), boils dry. A portion of this material can escape the confines of the cell.

- TK-36-3 (Sr), containing 10 gal (87 KCi), experiences a hydrogen explosion. The liquid contents, assumed to be Sr feed solution, will generate $H_2$ at a rate of 18.3 gal (2.4 $ft^3$)/h/gal of solution (see Table 9-10). With the tank containing 10 gal of solution, the total vapor space available is 4,390 gal. Assuming an initial $H_2$ concentration of 2.0 vol%, it will take 29 min to generate 4% hydrogen in the available vapor space. Using the same considerations as in Section 9.10.1.2, the tank will rupture. With direct almost-unlimited access from the vessel to the canyon and the atmosphere, there will be no significant increases of pressure due to confinement, but there can be transient pressure due to the shock wave. A mist will be generated at a concentration of 1 $g/m^3$ (Ref. 9-14) of air, and will be expelled into the airspace of the canyon (Section 9.10.1.3).

9.8.4.2.2 Hydrogen Explosion in TK-36-2.

- TK-36-1 (Cs), containing 3,200 gal (14,300 KCi), boils dry. A portion of this material can escape the confines of the cell.

- TK-36-2 (Cs), containing 200 gal (8,000 KCi), experiences a hydrogen explosion. The liquid contents, assumed to be cesium feed solution, will generate $H_2$ at a rate of 0.24 gal (0.03 $ft^3$)/h/gal of solution (see Table 9-10). With the tank containing 200 gal of solution, the total vapor space available is 4,200 gal. Assuming an initial $H_2$ concentration of 2.0 vol%, it will take 1.7 h to generate 4% hydrogen in the available vapor space. As above, this tank, too, will rupture, and there will again be no significant increase of pressure due to confinement, but there can be transient pressure due to the shock wave. A mist, as above, will be generated at a concentration of 1 $g/m^3$ of air.

- TK-36-3 (Sr), containing 3,200 gal (9,900 KCi), is destroyed. 3,400 KCi remains in the tank, 2,475 gal or 7,425 KCi drains to the cell, and then into the soil or to Cell 10.

9.8.4.2.3 Remaining Consequences. With either of the above hydrogen explosions, the remaining consequences are postulated to be the same.

- The following material will drain from the ruptured vessels into the cell, then to the cell drain header and to the soil and Cell 10.

| Vessel | Contents to soil | | Contents to Cell 10 | |
|---|---|---|---|---|
| | gal | KCi | gal | KCi |
| TK-5-1 (Sr) | 100 | 100 | 200 | 200 |
| TK-6-1 (Sr) | 1,000 | 1,000 | 2,000 | 2,000 |
| TK-6-2 (Sr) | 1,000 | 1,000 | 2,000 | 2,000 |
| TK-7-1 (Sr) | 1,000 | 1,000 | 2,000 | 2,000 |
| TK-7-2 (Sr) | 1,000 | 1,000 | 2,000 | 2,000 |
| TK-8-1 (Sr) | 1,000 | 1,000 | 2,000 | 2,000 |
| TK-8-2 (Sr) | 1,000 | 1,000 | 2,000 | 2,000 |
| TK-9-1 (Sr) | 1,000 | 5 | 2,000 | 10 |
| TK-9-2 (Sr) | 1,000 | 12 | 2,000 | 24 |
| TOTAL | 8,100 | 6,117 | 16,200 | 12,234 |

- With TK-10-1 in Cell 10 able to accept only 4,500 gal, the tank will overflow to the cell itself. If the cell, external to the tank, holds an additional 75,000 gal, then Cell 10 will accept all spillage which reaches it due to this accident. Combining the above figures with those resulting from the spillage of TK-36-1 (Cs) or TK-36-3 (Sr), the total quantities entering both the soil and Cell 10 are as follows:

| Vessel | Contents to soil | | Contents to Cell 10 | |
|---|---|---|---|---|
| | gal | KCi | gal | KCi |
| TK-36-1 (Cs) plus TK-10-1 heel, and spillages from Cells 5 through 9 | 8,900 | 6,117 Sr<br>3,575 Cs | 18,804 | 13,234 Sr<br>7,150 Cs |
| TK-36-3 (Sr) plus TK-10-1 heel, and spillages from Cells 5 through 9 | 8,900 | 8,592 Sr<br>no Cs | 18,804 | 18,184 Sr<br>no Cs |

- The tanks in the Bulk Chemical Storage Tank Farm are all postulated to topple from their supports and, except for the ammonia and carbon dioxide tanks, to spill 75% of their contents on the ground over a spillage period of 2 h. The multiple safety valve on the ammonia tank will be knocked off, and a 1 1/2 in. line attached to the carbon dioxide tank will be broken loose. Ammonia and carbon dioxide will spew through the 2 in. and 1 1/2 in. orifices, respectively, until the entire 40,000 lb of ammonia and 12,000 lb of carbon dioxide are exhausted.

When all of these various materials are mixed upon spilling in close proximity to each other, an extremely vigorous exothermic chemical reaction will ensue, especially between the nitric acid and the sodium hydroxide solution. There is approximately a five-fold excess of alkaline equivalents over acid equivalents, so the resulting mess will be highly caustic and slippery, even after copious dilution with water. Neutralization reactions of these materials will result in hundreds of pounds of various salts dissolved in the accompanying water.

Various secondary reactions can produce undeterminable quantities of $NO_x$ and $CO_2$ gases.

Small amounts of the pressurized ammonia and carbon dioxide can react with the chemical mixture, but both will essentially produce clouds composed of their own gaseous substances. Escaping nitric and hydroxyacetic acid fumes can react with the ammonia to produce a dense white cloud of particulate ammonium nitrate and ammonium acetate.

9.8.4.3 Containment Systems Effects. The seismic event will cause widespread adverse effects to the containment systems. Piping systems will be made inoperable either by direct disjointing and deformation, or indirectly by falling debris or dislodged equipment.

A number of cell coverblocks will be cracked or broken, with some falling into the cells and rupturing vessels and associated equipment. The breached cells will then allow direct access of contamination to the canyon, which would otherwise be possible but to a lesser extent, because the canyon exhaust system will be inoperable.

All of the bulk chemical storage tanks will be breached, allowing thousands of gallons of highly reactive chemicals to be released to the environment.

9.8.4.4 Confinement Systems Effects. Although the canyon exhaust system HEPA filters will probably be breached, the situation will be less serious to offsite persons than it otherwise would be, because the exhaust ventilation will not be operating. Nevertheless, there will be direct access of contamination to the atmosphere, because portions of the canyon walls and roof will collapse.

The cell drain header will be breached, allowing significant contamination to the soil directly under the building. Any additional usage of the drain system will be deleterious to that situation.

Hydrogen or ammonia explosions, either in-tank or full-cell, can have additional effects to the confinement system, but these effects are not likely to exceed in magnitude those effects already experienced, except for contamination level. Detailed assessments of such explosions as individual accidents are described in Section 9.10 and 9.11.

9.8.4.5 Occupational Personnel Effects.

9.8.4.5.1 Cell 36. Two variations exist in the envelope of effects from the accident involving Cell 36, as indicated in the following charts:

Variation #1.

| Vessel | Contained vol. (gal) | Inventory (KCi) | Event |
|---|---|---|---|
| TK-36-1 | 3,200 | 14,300 Cs | Vessel ruptured, 75% of contents spilled |
| TK-36-2 | 3,200 | 14,300 Cs | Vessel boils dry |
| TK-36-3 | 10 | 87 Sr | Hydrogen explosion |

Variation #2.

| Vessel | Contained vol. (gal) | Inventory (KCi) | Event |
|---|---|---|---|
| TK-36-1 | 3,200 | 14,300 Cs | Vessel boils dry |
| TK-36-2 | 200 | 8,000 Cs | Hydrogen explosion |
| TK-36-3 | 3,200 | 9,900 Sr | Vessel ruptured, 75% of contents spilled |

Since contamination or exposure effects will vary in any of the three tank events, depending on whether the inventory is strontium or cesium, two variations in the accident are considered. In addition to the assumptions postulated in Section 9.8.3.1, the following additional assumptions are postulated for the Cell 36 accident.

- The tank rupture occurs first as a direct result of the coverblock debris falling on the tank.
- The accumulation of hydrogen to an explosive level is accomplished several hours later, but within two days of the seismic event.

Vessel rupture and spillage will result in 800 gal of the contained contents entering the soil, because of a breached cell drain header. This volume equates to either 2,475 KCi Sr or 3,575 KCi Cs in a 22.8-ft-dia. soil sphere; a dose rate at 3 ft above the concrete floor is as shown below (Ref. 9-36):

$$\frac{\text{Sr (rem/h)}}{2.1 \times 10^{-13}} \qquad \frac{\text{Cs (rem/h)}}{1.9 \times 10^{-16}}$$

These values are far below background dose rates, and will, thereby, not affect occupational personnel.

The effects caused by drainage to Cell 10 will be discussed in conjunction with the Cell 5 accident.

A number of secondary events can occur later, such as a vessel boiling dry, a hydrogen explosion, or excessive contamination to people located at the plant site. However, according to RHO-MA-111 (Ref. 9-36), the occurrence of a seismic event will cause the evacuation of the site. Secondary events will be of no consequence, therefore, to occupational workers.

A vessel boiling dry will evolve a quantity of contamination into the atmosphere at a continuing rate until all moisture has evaporated. After that, because Cell 36 is open directly to the canyon atmosphere and to the environment, exposure effects can be experienced by people. The fact that this secondary event occurs many hours after the seismic event, and that all personnel will have evacuated by that time, no additional effects on occupational personnel will be experienced.

A hydrogen explosion can cause very severe explosion effects to anyone standing near the explosion location. Since there will be no coverblock on Cell 36 to absorb part of the shock, or to direct part of it to the air tunnel portals, the effects may be more consequential than otherwise, (see Section 9.10). The explosion produces 1,500 $m^3$ of air containing 1,500 g of either 8.7 KCi Sr/gal or 40.0 KCi Cs/gal, but only 0.1 this concentration of respirable mist (Ref. 9-32). The respective solutions are calculated to contain the following curie content per gram:

$$\frac{8.7\ \text{KCi}}{\text{gal}} \cdot \frac{1{,}000\ \text{Ci}}{\text{KCi}} \cdot \frac{\text{gal}}{3.8\ \text{L}} \cdot \frac{\text{L}}{1{,}000\ \text{mL}} \cdot \frac{\text{mL}}{1.125\ \text{g}} = 2.0\ \text{Ci Sr/g}$$

$$\frac{40\ \text{KCi}}{\text{gal}} \cdot \frac{1{,}000\ \text{Ci}}{\text{KCi}} \cdot \frac{\text{gal}}{3.8\ \text{L}} \cdot \frac{\text{L}}{1{,}000\ \text{mL}} \cdot \frac{\text{mL}}{1.125\ \text{g}} = 9.4\ \text{Ci Cs/g}$$

The respirable concentrations are, therefore:

Sr: 0.2 Ci/$m^3$ air  Cs: 0.9 Ci/$m^3$ air

As in the case of the vessel boiling dry, the same reasons prevail to preclude undesirable effects being experienced by occupational personnel.

9.8.4.5.2 Cells 5 Through 9. All vessels in Cells 5 through 9 contain strontium solutions. A total volume of 40,400 gal (24,468 KCi) are involved at an average concentration of 0.61 KCi/gal. A portion of this solution, 25%, runs into the soil from the broken cell drain header. On the same basis as in Section 9.8.4.5.1, a 27.0-ft-dia. sphere will be formed in the soil, with the top of the sphere 3 ft below a 6-ft concrete floor, and containing 6,117 KCi Sr.

If the draining solution is combined with that from the accident in Cell 36, then a 31.6-ft-dia. sphere will be formed 3 ft below a 6-ft concrete floor, and consisting of either 8,592 KCi Sr, or 6,117 KCi Sr and 3575 KCi Cs. This material is not even one order of magnitude greater in source terms than the example used in Section 9.8.4.5.1. These dose rates are, thereby, also far below background dose rates, and will not affect occupational personnel.

Drainage to Cell 10, combined with that from Cell 36, as well as Cell 10 heel, is as follows:

| | Volume (gal) | Activity (KCi) |
|---|---|---|
| Cell 36 | 8,000 (Sr) or 8,000 (Cs) | 4,950 (Sr) or 7,150 (Cs) |
| Cells 5 through 9 | 20,200 (Sr) | 12,234 (Sr) |
| Cell 10 heel | 1,000 (Sr) | 1,000 (Sr) |
| TOTAL | 29,200 (Sr)<br>OR<br>21,200 (Sr) + 8,000 (Cs) | 18,184 (Sr)<br>OR<br>13,234 (Sr) + 7,150 (Cs) |

The indicated volumes will cause TK-10-1 to overflow into the cell, itself, especially if half filled with rubble, but there is sufficient capacity for containment. Assuming homogeneous mixing, the following capacities will be distributed in Cell 10 as follows:

| | Volume (gal) | Activity (KCi) |
|---|---|---|
| TK-10-1 | 5,000 (Sr)<br>OR<br>3,630 (Sr) + 1,370 (Cs) | 3,114 (Sr)<br>OR<br>2,266 (Sr) + 1,225 (Cs) |
| Cell 10 | 20,200 (Sr)<br>OR<br>14,570 (Sr) + 6,630 (Cs) | 15,070 (Sr)<br>OR<br>10,968 (Sr) + 5,925 (Cs) |

Since Sr solutions are "worst case" from a contamination standpoint, and Cs solutions are "worst case" from an exposure standpoint, the "Sr + Cs" solutions above will be considered for addressing only exposure aspects of this scenario. The "Sr only" solutions will not be considered further, because significant additional contamination is not considered to result from these solutions in Cell 10. As indicated previously, personnel will have been evacuated, and there will not be a significant effect on occupational personnel.

9.8.4.5.3 Cell 27 Organic Fire. Sparks produced by falling debris ignite combustibles, which, in turn, ignite organic vapors emanating from organic liquid spilled from a ruptured vessel. Other relevant factors are as described or determined in Section 9.12. Because the canyon ventilation system is not operable, and no automatic fire suppression means are available, the fire burns unhindered until all flammable material has been burned.

At an 8 in./h burn rate, the fire will burn for 158 min, putting into the air each minute it burns the following quantities of the identified materials:

| | |
|---|---|
| Carbon particulates | 1.5 lb |
| Phosphorous Pentoxide ($P_2O_5$) Particulates | 1.4 lb |
| Strontium Oxide (SrO) Particulates | 0.19 Ci $^{90}Sr$ |

The carbon particles will cause nothing more than black smoke. The $P_2O_5$ particles, if combined with moisture, will produce, at most, an air concentration of various phosphorous oxide acids, such as phosphoric acid ($H_3PO_4$). None of these acids has an "Immediately Dangerous to Life or Health (IDLH)" concentration as defined by NIOSH/OSHA. The $^{90}SrO$ and $P_2O_5$ particulates will be released at the indicated rate of 0.19 Ci/min. These will be carried on the thermal updraft, and will be deposited along the path of migration as the updraft cools and the concentration becomes dispersed in the atmosphere.

In this section, the concern is with the occupational worker. Reference 9-37 indicates that less than 1% of contained heavy metals will be released in a fire-generated plume. Assuming 1.0% as worst case, and adjusting accordingly the values provided in Reference 9-36, a worker located ~50 ft downwind from the fire and unprotected will receive an external dose at the rate of 0.05 R/h during the course of the fire. With respiratory protection, the worker will receive dose commitments (rem) as follows:

| Respiratory protection factor | 1 | 50 | 10,000 |
|---|---|---|---|
| 1 yr bone | $4.6 \times 10^2$ | $9.2 \times 10^0$ | $4.6 \times 10^{-2}$ |
| 50 yr bone | $5.4 \times 10^3$ | $1.1 \times 10^2$ | $5.4 \times 10^{-2}$ |

Approved administrative procedures are expected to preclude the presence of occupational personnel in such environments without adequate protective measures.

9.8.4.5.4 Main Stack Collapse. Because there is no operating exhaust ventilation system when the main stack collapses onto the exhaust HEPA filter cells, there is not expected to be any significant incremental effects to occupational workers, compared to the effects from other events.

9.8.4.5.5 Collapse of Chemical Tank Farm. Collapse of the tanks in the chemical tank farm, and spillage of 75% of the contents of each tank containing solutions, as well as total expulsion of the anhydrous ammonia and liquid carbon dioxide tanks, can result in significant effects to occupational workers.

Contents spilled are as follows:

| Material | Quantity (gal or lb) | Weight (lb) of active material |
|---|---|---|
| Ammonia (anhydrous liquid)* | 40,000 lb | 40,000 |
| Ammonium carbonate solution (4M) | 8,625 gal | 20,800 |
| Carbon dioxide (liquid)* | 12,000 lb | 12,000 |
| EDTA (39%) | 3,375 gal | 1,450 |
| HEDTA (41%) | 3,375 gal | 1,525 |
| Hydroxyacetic acid (70%) | 3,375 gal | 2,600 |
| Nitric acid (57%) | 10,500 gal | 67,325 |
| Sodium hydroxide (50%) | 25,125 gal | 150,750 |

*These materials are forcibly spewed into the air.

Of the above materials spilled onto the ground, only about one-fourth of the caustic materials will be neutralized by the acidic materials, leaving a highly caustic and slippery solution, containing large quantities of various dissolved salts, to remain in puddles and on surfaces, and to seep into the soil. Before this end result is reached, however, the combination of these various solutions and released gases will generate highly exothermic chemical reactions, as well as secondary side reactions. The major reactions and their potential effects are indicated in the following table:

| Reactions | Potential effects |
|---|---|
| Ammonium carbonate + nitric acid | Carbon dioxide gas released; dissolved ammonium nitrate |
| Sodium hydroxide + nitric acid | Dissolved sodium nitrate |
| Ammonia + carbon dioxide + moisture | Particulate cloud of ammonium carbonate |

A side reaction of potential significance is the generation of nitrogen oxides ($NO_x$), but the diverse reaction mixture precludes determination of the expected quantity.

In addition to the reactions generated by this accident, clouds of ammonia alone or carbon dioxide alone can be wafted to the location of occupational workers. Such a situation, if the air concentrations are sufficiently high in either of these materials, can cause suffocation. It is postulated that the ammonia cloud travels to the carbon dioxide cloud, forming particulate ammonium carbonate, and continues to the location of B Plant; the ammonium carbonate cloud is formed as long as the carbon dioxide continues to be expelled. There is also an excess of ammonia mixed with the ammonium carbonate. This ammonia-ammonium carbonate cloud is followed immediately with a cloud of ammonia mixed only with air.

The initial concentration of the plume is ~100% of an ammonium-carbon dioxide mixture. As moisture diffuses into the cloud as the plume moves downwind, the formation of particulate ammonium carbonate can take place. At a 1 m/s wind velocity, the cloud will pass in ~10 min. During this time, anyone trapped in this cloud will be subjected both to the toxic effects of ammonia and carbon dioxide, as well as suffocation. Entrainment effects in eddies around the building and rubble can prolong this time element (Ref. 9-36). Although ammonia gas is lighter than air and will tend to rise into the atmosphere, as well as diffuse, the close proximity of B Plant will preclude escape from the effects of the ammonia and carbon dioxide.

9.8.4.6 Onsite/Offsite Personnel Effects

Onsite personnel effects are not expected to be a problem from secondary events, because the site will be evacuated (Ref. 9-36). However, primary events resulting from the seismic event, and postulated to produce effects before evacuation can take place, are described below for onsite maximum individuals. All events are described also for offsite maximum individuals.

9.8.4.6.1 Cell 36. The vessel which boils dry releases $4.2 \times 10^{-9}$ Ci/h of Cs for ten days. With worst case atmospheric conditions, the "maximum individuals" will receive a dose commitment as follows (Ref. 9-38):

| Maximum individual | Time (yr) | Dose commitment (rem) | | |
|---|---|---|---|---|
| | | Whole body | Bone | Lung |
| Onsite (2750-E) | 1 | $1.0 \times 10^{-10}$ | $1.1 \times 10^{-10}$ | $2.7 \times 10^{-11}$ |
| | 50 | $1.2 \times 10^{-10}$ | $1.3 \times 10^{-10}$ | $3.0 \times 10^{-11}$ |
| Offsite (Hwy 240) | 1 | Not worst case | | |
| | 50 | | | |
| Offsite (Site Boundary) | 1 | $3.3 \times 10^{-11}$ | $3.3 \times 10^{-11}$ | $5.0 \times 10^{-11}$ |
| | 50 | $1.7 \times 10^{-10}$ | $1.7 \times 10^{-10}$ | $1.9 \times 10^{-10}$ |

After the vessel has boiled dry, if the "window" in the rubble, as well as atmospheric conditions, are worst case, "maximum individuals" will receive the following indicated dose commitments (Ref. 9-38):

| Maximum individual | Time (yr) | Dose commitment (rem) | | |
|---|---|---|---|---|
| | | Whole body | Bone | Lung |
| Onsite (2704-E) | 1<br>50 | Not applicable, site evacuated | | |
| Offsite (Hwy 240) | 1<br>50 | Not worst case | | |
| Offsite (Site Boundary) | 1<br>50 | $1.1 \times 10^{-3}$<br>$5.7 \times 10^{-3}$ | $1.1 \times 10^{-3}$<br>$5.9 \times 10^{-3}$ | $3.0 \times 10^{-4}$<br>$4.3 \times 10^{-3}$ |

These dose commitments are below guideline values, and this aspect of the seismic scenario is classified as low hazard (Ref. 9-5).

9.8.4.6.2 Hydrogen Explosion. The hydrogen explosion will occur in either of two vessels, one containing strontium and the other cesium. In each case, a 1,500 $m^3$ cloud, (ten times volume of cells air space assumed) is postulated to be formed, each containing 150 g of of respirable-sized mist (0.1 $g/m^3$ concentration). The strontium cloud will contain 305 Ci Sr. The cesium cloud will contain 1.4 Ci Cs. With "worst case" conditions, "maximum individuals" will receive the following indicated dose commitments (Ref. 9-38):

| Maximum individual | Time (yr) | Strontium dose commitment (rem) | | |
|---|---|---|---|---|
| | | Whole body | Bone | Lung |
| Onsite (2704-E) | 1<br>50 | Not applicable, site evacuated | | |
| Offsite (Hwy 240)* | 1<br>50 | $4.8 \times 10^{-2}$<br>$5.7 \times 10^{-1}$ | $7.3 \times 10^{-1}$<br>$8.4 \times 10^{0}$ | $1.3 \times 10^{-2}$<br>$1.3 \times 10^{-2}$ |
| Offsite (Ringold) | 1<br>50 | $8.0 \times 10^{-2}$<br>$9.8 \times 10^{0}$ | $6.3 \times 10^{-1}$<br>$4.0 \times 10^{1}$ | $8.1 \times 10^{-3}$<br>$8.1 \times 10^{-3}$ |

| Maximum individual | Time (yr) | Cesium dose commitment (rem) | | |
|---|---|---|---|---|
| | | Whole body | Bone | Lung |
| Onsite (2704-E) | 1<br>50 | Not applicable, site evacuated | | |
| Offsite (Hwy 240)* | 1<br>50 | $5.8 \times 10^{-5}$<br>$6.5 \times 10^{-5}$ | $6.1 \times 10^{-5}$<br>$7.3 \times 10^{-5}$ | $1.5 \times 10^{-5}$<br>$1.7 \times 10^{-5}$ |
| Offsite (Site Boundary) | 1<br>50 | $4.0 \times 10^{-4}$<br>$2.0 \times 10^{-3}$ | $4.1 \times 10^{-4}$<br>$2.1 \times 10^{-3}$ | $1.1 \times 10^{-4}$<br>$1.5 \times 10^{-3}$ |

*Not applicable if Highway 240 is closed at time of explosion.

These dose commitments are within accepted guidelines, and this aspect of the seismic scenario is classified as low hazard (Ref. 9-5).

9.8.4.6.3 Cells 5 Through 9. As indicated in Section 9.8.3.5.2, the following indicated vessels will contain the indicated quantities of material after tank spillage:

| Vessel | Volume (gal) | Activity (KCi) |
|---|---|---|
| TK-5-1 | 100 | 100 (Sr) |
| TK-6-1 | 1,000 | 1,000 (Sr) |
| TK-6-2 | 1,000 | 1,000 (Sr) |
| TK-7-1 | 1,000 | 1,000 (Sr) |
| TK-7-2 | 1,000 | 1,000 (Sr) |
| TK-8-1 | 1,000 | 1,000 (Sr) |
| TK-8-2 | 1,000 | 1,000 (Sr) |
| TK-9-1 | 1,000 | 5 (Sr) |
| TK-9-2 | 1,000 | 12 (Sr) |
| Cell 36 | 8,000 | 4,950 (Sr)/7,150 (Cs) |
| TK-10-1* | 5,000 | 3,114 (Sr)/2,266 (Sr) + 1,225 (Cs) |
| Cell 10 heel | 24,200 | 15,070 (Sr)/10,968 (Sr) + 5,925 (Cs) |

*This tank is open. Others are closed, but ruptured.

The total inventory maximizing strontium content is as follows:

| | Volume (gal) | Activity (KCi) |
|---|---|---|
| TK-10-1 | 5,000 | 3,114 |
| All others | 40,300 | 26,137 |

Under worst case conditions for Sr, encompassing contamination and exposure, "maximum individual dose commitments are as follows (Ref. 9-38):

| Maximum individual | Time (yr) | Sr. Dose commitment (rem) | | |
|---|---|---|---|---|
| | | Whole body | Bone | Lung |
| Onsite (2704-E) | 1 | $1.8 \times 10^{-2}$ | $2.6 \times 10^{-1}$ | $4.9 \times 10^{-3}$ |
| | 50 | $2.1 \times 10^{-1}$ | $3.1 \times 10^{0}$ | $5.0 \times 10^{-3}$ |
| Offsite (Hwy 240) | 1 | $3.4 \times 10^{-4}$ | $5.0 \times 10^{-3}$ | $9.4 \times 10^{-5}$ |
| | 50 | $3.9 \times 10^{-3}$ | $5.8 \times 10^{-2}$ | $9.4 \times 10^{-5}$ |
| Offsite (Site Boundary) | 1 | $6.2 \times 10^{-4}$ | $4.4 \times 10^{-3}$ | $7.5 \times 10^{-5}$ |
| | 50 | $6.8 \times 10^{-2}$ | $2.8 \times 10^{-1}$ | $3.2 \times 10^{-4}$ |

The total inventory maximizing cesium content is as follows:

| | Volume (gal) | Activity (KCi) |
|---|---|---|
| TK-10-1 | 5,000 | 2,266 Sr + 1,225 Cs |
| All others | 40,300 | 17,085 Sr + 13,075 Cs |

Under worst case conditions for Cs, encompassing contamination and exposure, "maximum individuals" dose commitments are as follows (Ref. 9-38):

| Maximum individual | Time (yr) | Cs Dose commitment (rem) | | |
|---|---|---|---|---|
| | | Whole body | Bone | Lung |
| Onsite (2704-E) | 1 | $1.5 \times 10^{-2}$ | $2.0 \times 10^{-1}$ | $4.2 \times 10^{-3}$ |
| | 50 | $1.5 \times 10^{-1}$ | $2.3 \times 10^{0}$ | $4.3 \times 10^{-3}$ |
| Offsite (Hwy 240) | 1 | $2.9 \times 10^{-4}$ | $3.7 \times 10^{-3}$ | $7.9 \times 10^{-5}$ |
| | 50 | $2.9 \times 10^{-3}$ | $4.3 \times 10^{-2}$ | $8.1 \times 10^{-5}$ |
| Offsite (Site Boundary) | 1 | $7.3 \times 10^{-4}$ | $3.5 \times 10^{-3}$ | $1.3 \times 10^{-4}$ |
| | 50 | $5.2 \times 10^{-2}$ | $2.1 \times 10^{-1}$ | $1.3 \times 10^{-3}$ |

These dose commitments are below accepted guidelines, and this aspect of the seismic scenario is classified as low hazard (Ref. 9-5).

Solutions seeping into the soil under B Plant are not considered to produce significant onsite/offsite effects. See Section 9.17.

9.8.4.6.4 Cell 27 Organic Fire. This fire burns for 158 min, generating 0.19 Ci/min of $^{90}SrO$ with all released particles being of respirable size (see Section 9.8.3.5.3). The material rises with the updraft created by the fire and is spread by wind currents. Fallout is also generated simultaneously.

Reference 9-37 provides data which indicate that, in the event of a fire with the fuel being similar to NPH and containing 30% TBP, less than 1.0% of contained heavy metals will be released in the resulting plume. Assuming 1.0% release as "worst case," and adjusting values accordingly as provided in Reference 9-38, dose commitments to "maximum individuals" are as indicated below:

| Maximum individual | Time (yr) | Dose commitment (rem) | | |
|---|---|---|---|---|
| | | Whole body | Bone | Lung |
| Onsite (2704-E) | 1<br>50 | 2.5<br>29 | 3.8<br>440 | 0.68<br>0.68 |
| Offsite (Hwy 240) | 1<br>50 | 0.05<br>0.56 | 0.71<br>8.3 | 0.01<br>0.01 |
| Offsite<br>(Site Boundary) | 1<br>50 | 0.08<br>9.7 | 0.62<br>40 | <0.01<br><0.01 |

Except for the 50 yr dose commitment for onsite maximum individuals, all values are within Rockwell guidelines (Ref. 9-5). However, because the released activity occurs over a 158-min time span, evacuation of affected onsite personnel within 105 min of the beginning of the accident will preclude a 50 yr dose commitment to the onsite individuals which exceeds guidelines.

9.8.4.7 Secondary Effects. The particular conditions described in the scenario will likely lead to various secondary effects indicated as follows:

- extensive structural repair or replacement of the facility
- extensively contaminated building and surrounding area caused by efforts to minimize effects caused by the primary event
- loss of operational capability for an extended period of time.

9.8.4.8 Preventives. There are no known means for preventing a seismic event. There is no instrument in place which will give advance indications of a seismic event. It is expected that B Plant can withstand most effects of a 1/2 SSE (0.125g), as described earlier, without catastrophic damage, although there may be damage sustained which could preclude normal operations for several weeks or months.

A condition of the seismic scenario is that there is no electrical power available, thereby precluding the availability of a sustained energy source for igniting the organic liquid. Under these conditions, it is determined the probability of a fire caused by this accident is incredible.

9.8.4.9 Risk. Highest probability estimated for a SSE is $8.3 \times 10^{-4}$/yr, or once every 1,200 yr. Highest probability for a 1/2 SSE is $3.3 \times 10^{-3}$/yr, or once every 300 yr. As described above, with an incredible probability ($<1 \times 10^{-7}$/yr), the indicated risk is $<4.5 \times 10^{-5}$ rem/yr for the onsite maximum individual. According to Reference 9-5, this accident is classified as high hazard, but acceptable risk.

## 9.9 TOTAL LOSS OF ELECTRICAL POWER

### 9.9.1 Power Provisions

9.9.1.1 Primary Power Provisions. The Bonneville Power Administration supplies power to the Midway Station, then to the 251 Substation over dual 230 kV lines. From the 251 Substation, power is delivered over two 13.8 kV lines, C8-L6 and C8-L7, to B Plant pole mounted substations located outside on the south side of B Plant. If necessary, another 13.8 kV line, C8-L5, can be tied in manually in about 30 min. At this substation, the 13.8 kV voltage is reduced to 2.4 kV and is eventually routed to transformers located outside the north wall of B Plant (221-B). The voltage is reduced once again to 480V, 3 phase which enters the electrical gallery in numerous circuits servicing various end uses throughout the building. There is also one emergency 2.4 kV line (E8-L66) from the 284 Power House which enters the 221-B Building on the south side and is connected to switchgear in the electrical gallery.

From 7/60 to 8/67 (Ref. 9-11) and 8/74 to 2/84 (Ref. 9-12), there have been 27 outages to B Plant, lasting a total of 256 min, on the main feed system to the 252-E Substation (8/67 to 8/74 data not available). The longest duration was 44 min occurring on May 25, 1961. These are listed in Table 9-9. The average time to restore these outages has been 9.5 min. Electrical distribution personnel can always be called to the job within 45 min if required for emergencies.

THIS PAGE INTENTIONALLY
LEFT BLANK

The mean time between failures, counting the missing segment as 7 yr, for the periods indicated above is

$$\frac{8{,}760\ \text{h}}{\text{yr}} \cdot \frac{17\ \text{yr}}{27\ \text{failures}} = 5{,}516\ \text{h}$$

and the percentage of time that the primary power system has been available to perform its function has been

$$\frac{[(8{,}760\ \text{h/yr})(17\ \text{yr}) - 4.27\ \text{h}](100)}{(8{,}760\ \text{h/yr})(17\ \text{yr})} = 99.997\%$$

With upgrades in the primary power system in 1984, availability of the system should be even better.

9.9.1.2 Emergency Power Provisions. There is no emergency generator available to B Plant.

9.9.2 Cause and Source

It is postulated that all electrical supply is lost to B Plant. Common cause events that can produce such an effect are a natural forces event, an accident which knocks out power poles or lines, and loss of the 251 substation. Loss of the particular facilities, per se, is not so significant as time necessary to restore power to B Plant. In this case, it is postulated that the seismic event is the bounding cause, because of a probability greater than that of a DBT, and because of the likely greater time necessary for recovery than from the other causes of total power loss.

9.9.3 Energy Release

There is not expected to be any radionuclide release to the environment solely from total interruption of electrical supply.

9.9.4 General Effects

9.9.4.1 Emergency Lighting. Backup lighting is automatically activated upon loss of primary power. Total loss of all electrical power will preclude availability of installed lighting.

9.9.4.2 Door Lock Controls. Simultaneous loss of all emergency power sources will preclude utilization of door lock controls for the various canyon deck entrances.

9.9.4.3 Instrumentation Circuits. Radiation detection and health monitoring systems, and their associated alarms, annunciators, and recorders, are supplied by the emergency power sources. Total loss of electrical power will preclude operation of any of these instrument systems, which monitor the following:

- Cooling water effluent
- Steam condensate effluent
- Electrical and Pipe Gallery monitors
- Stack monitor (ventilation exhaust)
- Canyon air monitors
- Operating Gallery monitors
- Cell leak detectors.

9.9.4.4 Instrument Air and Process Air. These systems will become inoperable in a total power outage, because their compressor motors will not operate. There will be no dilution air to process vessels, thus increasing the possibility of a hydrogen or an ammonia explosion (see Sections 9.10 and 9.11). Such an explosion, however, will have less onsite/offsite effect than otherwise, because the canyon exhaust/filtration system will also be inoperable. Standby diesel air compressors are installed to operate automatically, however, in the event of power loss.

9.9.4.5 Cooling Water Diversion. High-risk cooling water, if contaminated, is automatically diverted to the 216-B-59 emergency retention basin. With no electrical power, the motor-operated valve which accomplishes the diversion will not operate, and contaminated cooling water can enter the 207-B pond if tank cooling water is still being used.

9.9.4.6 Supply and Exhaust Fans. If all electrical power is lost, the electrically-operated supply and exhaust fans will not be operable. The steam-driven turbine to the exhaust ventilation system will be available, because of emergency steam- and electrical-power-generation capabilities in the 200-E area power house.

9.9.4.7 Canyon Cranes. This equipment will not be available for use if all electrical power fails.

9.9.5 Containment System Effects (Cell Operations)

9.9.5.1 Process Vessels. All process vessels, except centrifuges, columns, and towers, are equipped with cooling coils and agitators for the dissipation of fission product heat. Total loss of electrical power will

decrease heat removal ability, because of lack of agitation, but cooling water can still be operated; the raw/cooling water emergency pumps are diesel driven. Also, in the power house, there are steam-driven backup pumps.

9.9.5.2 Centrifuge Operation. Fission product heat removal from a precipitated cake in a centrifuge bowl is accomplished by natural convection to the cell air. The cake temperature is controlled by limiting solids volume, as well as residence time in the centrifuge bowl. Cake dissolution is accomplished by pumping solutions through bowl sprays, pumping from feed tanks, and rotating the centrifuge slowly. Without power, the procedure for removal of the centrifuge contents will be interrupted. During power outages, the bowl will be kept full of water by adding water by gravity from gallery head tanks.

9.9.5.3 Ion Exchange Column. The ion exchange column T-18-2 is the only vessel which normally operates under pressure. In this condition, the chemical addition lines from non-radioactive areas to the column are removed, and the nozzles blanked, using the 75 ton crane, thereby precluding any means by which solution can be forced back to the operating gallery. Cooling of this column is controlled by limiting the fission product inventory and by the normal process flow through the column.

In the event of a power failure, the process flow will be interrupted, and the crane will not be available for installing a chemical addition line from the operating gallery. In two days, the contents of T-18-2 can boil, and could evaporate to dryness in about three weeks. Water can be added to the 18-3 tank by gravity flow, and could normally be pumped into T-18-2, but such a procedure is precluded by a total power outage (Ref. 9-11). In such an event, water can be added by gravity, and the column drained to a cell tank or, as a last resort, drained to TK-10-1 via the cell floor.

### 9.9.6 Occupational Personnel Effects

No occupational personnel effects are expected to be directly attributable to a total loss of electrical power. Current approved procedures require that all except critical personnel be evacuated from the building as an immediate response. Management will then decide which plans of action to implement, based upon the details of the situation at the time.

### 9.9.7 Confinement System Effects

The ventilation system for 221-B, a one-pass airflow, is exhausted to a 200 ft stack by two centrifugal fans, each rated 37,500 scfm. A steam-driven fan, rated at 37,500 scfm, serves as an emergency standby in the event of a total electrical outage or mechanical failure of both of the electric exhaust fans. A vacuum control on the inlet duct automatically signals the steam turbine and starts it when the vacuum in the duct drops below 0.2 in. of water.

In the event of loss of all power sources (e.g., from a natural forces event) the confinement system will cease operation, and there will be no ventilation of the building.

### 9.9.8 Onsite/Offsite Personnel Effects and Environmental Effects

Duration of an outage can affect environmental releases after restart, depending on internal occurrences in the meantime.

### 9.9.9 Secondary Effects

If the total power outage is of short duration, few if any significant secondary effects result. Few of the primary power outages given in Section 9.9.1 have lasted longer than necessary time to respond to them, but emergency power was available in all of those occurrences. The longer total power is out, the greater can be expected the quantity and magnitude of secondary effects. All other scenarios described in this chapter can result as a secondary effect of a total power outage. Refer to these scenarios for details.

### 9.9.10 Preventives

- Two primary power lines serve B Plant. When power on one line is reduced or interrupted, services supplied to that line automatically transferred to the other.
- In the event of power reduction or interruption to both primary lines, a third line is available which can be tied in manually in about 30 min.

### 9.9.11 Risk

The particular failures which must occur for this accident, resulting in total loss of electrical power to B Plant, and their probabilities, are:

| | |
|---|---|
| Loss of both primary feeders in excess of one hour (no occurrence to date; based on operational experiences, extrapolated) | $4.9 \times 10^{-2}$/yr |
| Loss of third feeder for manual tie-in (1/2 SSE probability) | $3.3 \times 10^{-3}$/yr (Ref. 9-10) |
| Other causes (1/2 SSE probability) | $3.3 \times 10^{-3}$/yr (Ref. 9-10) |

Even though Table 9-9 does not indicate a total electrical failure exceeding one hour, extrapolation of that data gives a probability of such as $4.7 \times 10^{-2}$/yr, or once every 21 yr. If fact, operational experience does indicate that one total power outage has occurred in excess of one hr; it lasted approximately two hr. The frequency of $4.7 \times 10^{-2}$/yr. is higher than that of a ½ SSE ($3.3 \times 10^{-3}$/yr) or a tornado ($6 \times 10^{-7}$/yr).

Total electrical outage can cause any of the accidents described in the scenarios, depending on the duration of outage. However, as indicated in Section 9.9.10, a third line is available which can be tied in manually in about 30 minutes. It is not likely that the indicated third line will be unavailable at the same time that the two main feeder lines are also unavailable, short of a seismic event. The probability of such is, therefore, designated to be that of a ½ SSE, $3.3 \times 10^{-3}$/yr. The risk of the individual accidents is described in the individual scenarios.

The cause of one or more accidents occurring as a result of total power loss is, therefore, assumed to result from a seismic event as a common cause. The scenario described from this common cause is described in Section 9-8, and the risk is identified therein.

## 9.10 HYDROGEN ACCUMULATION AND EXPLOSION

Throughout current acid waste (CAW) processing, small quantities of hydrogen will be unavoidably generated due to the radiolytic decomposition of aqueous solutions or cooling water. Explosions and undesirable consequences could result if the hydrogen evolution from any source is allowed to accumulate in air and ignite. Three varieties of potential hydrogen explosion accidents have been identified:

- In-Tank--Relatively small quantities of hydrogen collect and explode within the vapor space of a partially full process tank, rupturing all tanks in the cell, but causing only minor damage to the cell and confinement systems.

- Full Cell--Loss of cell ventilation will allow a large quantity of hydrogen to slowly accumulate in a cell atmosphere, and a resulting explosion can be postulated to breach the cell and cause loss of confinement.

- Full Canyon--Total loss of canyon ventilation for an extended time can allow accumulation of hydrogen in the canyon. A resulting explosion can cause extensive breach of confinement.

When contending with combination effects of an accident of this type, it is realized that variation of the aqueous volume of a given tank will affect the time necessary for accumulation of hydrogen in the vapor space of that tank. A trade-off must therefore be made between the quantity of aqueous contents necessary for maximum contamination effects and the quantity of 4% hydrogen concentration in the vapor space for maximum explosion effects. Of course, higher concentrations of hydrogen are possible, but 4% is the minimum burn-sustainable concentration in dry air.

Probable B Plant vessels which would contain the largest source terms of radioactive concentration during CAW processing are indicated in Table 9-10. Values used in this table are based on maximum expected concentration of strontium or cesium and the rate of hydrogen generation of the contained solutions. The quantity of solution is calculated to be that which will generate sufficient hydrogen in one hour to produce a four percent hydrogen concentration in the remaining vapor space, assuming that a two percent hydrogen concentration already occupies the vapor space.

The following assumptions are made in the analysis of potential effects of an in-tank hydrogen reaction:

- The reaction results in an explosion
- The concentrations of hydrogen and oxygen in the containment atmosphere are in stoichiometric proportions, i.e., 29.6% $H_2$, 14.8% $O_2$, and 55.6% $N_2$ by volume. (Any other proportions will attenuate the explosion.)
- Water vapor is absent before ignition. (Water vapor will attenuate the explosion.)
- The hydrogen is completely oxidized to water according to the reaction

  $$2H_2(g) + O_2(g) \longrightarrow 2H_2O(g)$$

  (Less than total oxidation will attenuate the explosion.)
- A single HEPA filter will reduce the exiting concentration of aerosol/mist in air to 0.14 mg solution per cubic meter of air (Ref. 9-14).

### 9.10.1 In-Tank Explosion in Cell

9.10.1.1 Cause and Source. High concentrations of radioisotopes are present in process solutions, so radiolysis of water to yield hydrogen is a continuing reaction. Continuous air purging of the vapor space is normally used to keep the hydrogen concentrations in vessel atmospheres well below the lower flammability limit of 4% in dry air. Despite precautions taken to prevent hazardous concentrations of radiolytic hydrogen from accumulating, deviation from administrative procedures or non-detection of improper functioning of the dilution air system can lead to an explosion.
A flammable mixture of hydrogen in air can be obtained, however, if dilution air to a vessel is interrupted for a short time. Reference to Table 9-10 indicates which vessels are likely to produce the worst effects from such an explosion. Tanks 39-5 and 39-3 contain the highest concentrations of strontium and cesium, respectively, and are the subjects of the following scenarios.

TABLE 9-10. Vessels of Highest $^{90}Sr$ or $^{137}Cs$ Concentration and Their Hydrogen Explosion Scenario Parameters.

| Vessel description | Vessel designation | Source | | $H_2$ generation rate (gal/h/gal) solution | $H_2$ generation in 1 h (gal) | Total vessel vol (gal) | Liquid level (gal) | Vapor space (gal) |
|---|---|---|---|---|---|---|---|---|
| | | KCi/gal (Sr or Cs) | Total KCi | | | | | |
| Strontium storage tank | TK-6-1 or TK-6-2 | 3.6 Sr | 12,420 Sr | $7.8 \times 10^{-3}$ (a) | 26.7 | 5,000 | 3,450 | 1,550 |
| Strontium storage tank | TK-7-1 or TK-7-2 | 7.2 Sr | 18,940 Sr | $1.6 \times 10^{-2}$ (a) | 64.0 | 5,000 | 4,000 | 1,000 |
| Strontium storage tank | TK-8-1 or TK-8-2 | 3.6 Sr | 12,420 Sr | $7.8 \times 10^{-3}$ (a) | 26.7 | 5,000 | 3,450 | 1,550 |
| Cesium storage tank | TK-37-1, TK-37-2, TK-37-3 | 6.25 Cs | 10,375 Cs | $3.1 \times 10^{-2}$ (b) | 51.3 | 4,400 | 1,660 | 2,740 |
| Cesium concentrator | E-38-6 | 20.0 Cs | 320 Cs | $9.9 \times 10^{-2}$ (b) | 1.6 | 100 | 16 | 84 |
| Cesium feed tank | TK-39-3 | 40.0 Cs | 1,000 Cs | $2.0 \times 10^{-1}$ (b) | 4.9 | 325 | 25 | 300 |
| Strontium feed tank | TK-39-5 | 8.7 Sr | 26 Sr | $1.9 \times 10^{-2}$ (a) | 41.8 | 2,750 | 2,200 | 550 |

(a) Assumes $NO_3^-$ concentration 1.3M.

(b) Assumes $NO_3^-$ concentration 0.0M.

Normally, vessel atmospheres are not intentionally exposed to high temperature ignition sources. However, static changes, mechanical impact, or malfunction of electrical instrumentation must be recognized as potential ignition sources.

9.10.1.2 Energy Release. Technical sources (Ref. 9-15 and 9-16) indicate possible explosive pressures as high as 117 psia and equilibrium temperatures as high as 2,500°C (2753°K). Assuming these values, the resulting shock wave will rupture the tank and produce an aerosol of a portion of the contents. With a worst case pressure of 117 psia inside the vessel, the $P_1V_1 = P_2V_2$ relationship indicates cell pressures as

| Cell 39, TK-39-5 (Sr) | Cell 39, TK-39-3 (Cs) |
|---|---|
| 2.0 psig | 1.1 psig |

Even though TK-39-3 contains the highest concentration of Cs, volume considerations preclude major effects, because pressure increases from a hydrogen explosion are insufficient to cause such effects. Therefore, consequences from a hydrogen explosion and due to Cs will be assessed using volume considerations. This worst case now will be TK-37-1, -2, or -3, identical Cs storage tanks. Referring to Table 9-10, and using the above values, the cell pressure resulting from a hydrogen explosion in one of these tanks is 9.7 psig.

9.10.1.3 Containment System Effects. Because of the ventilation system orifices around the cover blocks and between the cell and air tunnel, the pressure increase might not result in raised cover blocks (7.8 lb/in.$^2$ required). However, in the event that such a phenomena occurred, it will be assumed that 50% of the airborne contents enter the canyon. It is assumed that there are 150 m$^3$ of unoccupied volume in the cell.

If the contained liquid in TK-39-5 were to be dispersed in the air, 3 gal (11,400 mL) would be dispersed in 150 m$^3$, resulting in a mist concentration of

$$\frac{11{,}400 \text{ mL}}{150 \text{ m}^3} \left| \frac{1{,}125 \text{ mg}}{\text{mL}} \right. = 85{,}500 \text{ mg mist/m}^3 \text{ of air}$$

This quantity far exceeds that which can be held by one m$^3$ of cell air, so there will be only 150 g of this solution dispersed in the cell air (Ref. 9-14). Fifty percent of this quantity is postulated to enter the

canyon, which will be 75 g. The contamination entering the canyon at 1.125 g/mL, will then be

$$\frac{75\ \text{g} \quad 1\ \text{mL} \quad 8.7\ \text{KCi} \quad 1\ \text{gal} \quad 1\ \text{L} \quad 1{,}000\ \text{Ci}}{1.125\ \text{g} \quad \text{gal} \quad 3.78\ \text{L} \quad 1{,}000\ \text{mL} \quad 1\ \text{KCi}} = 153.4\ \text{Ci}\ {}^{90}\text{Sr}$$

With much more liquid available in TK-37-1, the same argument applies. With 75 g of solution from TK-37-1 entering the canyon, the contamination will then be

$$\frac{75\ \text{g} \quad 1\ \text{mL} \quad 6.25\ \text{KCi} \quad 1\ \text{gal} \quad 1\ \text{L} \quad 1{,}000\ \text{Ci}}{1.1\ \text{g} \quad \text{gal} \quad 3.78\ \text{L} \quad 1{,}000\ \text{mL} \quad 1\ \text{KCi}} = 112.8\ \text{Ci}\ {}^{137}\text{Cs}$$

9.10.1.4 <u>Occupational Personnel Effects</u>. Assumptions are:

- An occupational worker is located 40 ft from the nearest exit
- He takes 6 s to exit
- He breathes 450 mL of air/s
- He is wearing an approved respirator with a protection factor of 50.

Assuming that the 153.4 Ci of $^{90}$Sr is further diluted 10-fold when inhaled by an occupational worker, then

$$\frac{153.4\ \text{Ci} \quad 1\ \text{m}^3 \quad 10^6\ \mu\text{Ci}}{1{,}500\ \text{m}^3 \quad 10^6\ \text{mL} \quad \text{Ci}} = 0.1\ \mu\text{Ci}\ {}^{90}\text{Sr/mL}$$

Dose received is then as follows:

$$\frac{0.1\ \mu\text{Ci} \quad 6\ \text{s} \quad 450\ \text{mL}}{\text{mL} \quad 50 \quad \text{s}} = 5.4\ \mu\text{Ci}\ {}^{90}\text{Sr}$$

Dose commitment to such an individual (Ref. 9-17) is:

| Time (yr) | Doses in rem | | |
|---|---|---|---|
| | Whole body | Bone | Lung |
| 1 | 0.8 | 11.1 | 0.2 |
| 50 | 0.9 | 135.0 | 0.2 |

With 112.8 Ci $^{137}Cs$ diluted 10-fold when inhaled by an occupational worker, the activity is then:

$$\frac{112.8}{1{,}500\ m^3} \cdot \frac{1\ m^3}{10^6\ mL} \cdot \frac{10^6\ \mu Ci}{Ci} = 7.5 \times 10^{-2}\ \mu Ci\ ^{137}Cs/mL$$

Dose received is then as follows:

$$\frac{7.5 \times 10^{-2}\ \mu Ci}{mL} \cdot \frac{6\ s}{50} \cdot 450\ mL = 4.1\ \mu Ci\ ^{137}Cs$$

Dose commitment (Ref. 9-17) to such an individual is

| Time (yr) | Doses in rem | | |
|---|---|---|---|
| | Whole body | Bone | Lung |
| 1 | $1.6 \times 10^{-1}$ | $1.6 \times 10^{-1}$ | $4.1 \times 10^{-2}$ |
| 50 | $1.8 \times 10^{-1}$ | $2.0 \times 10^{-1}$ | $4.4 \times 10^{-2}$ |

Of the above sets of dose commitment values, only the 1 yr $^{90}Sr$ bone dose exceeds Rockwell guidelines (Ref. 9-4). Section 9.10.1.9, however, indicates that the probability of such an accident is essentially incredible. Reference to Table 9-10 indicates that a 4% hydrogen

accumulation will take much more time to occur than will be necessary for the situation to be recognized (Section 9.10.1.9). Upon recognition, emergency precautions preclude the presence of occupational personnel in the canyon.

9.10.1.5 Confinement System Effects. If this explosion did not result in canyon contamination, and the entire 150 $m^3$ of mist entered the air tunnel, different effects will result. It is assumed that the 150 g of contained aerosol/mist in the cell air is totally transported into the air tunnel and then to the HEPA filters. It is also assumed that pressure effects are likewise translated.

Testing of fire-resistant HEPA filters of various sizes has determined their ability to withstand explosive shock waves without suffering a loss of rated filtration efficiency. Table 9-11 summarizes this data, showing the highest peak overpressures of incident pressure waves to which filters were subjected without failures (safe) and to failure (fail).

TABLE 9-11. "Safe" or "Fail" Peak Shock Wave Overpressures (psi) for HEPA Filters (Ref. 9-15).

| | Filter Size (in inches) | | | | | |
|---|---|---|---|---|---|---|
| | 8x8x6 | 12x12x6 | 24x24x12 | 8x8x6 | 12x12x6 | 24x24x12 |
| | New Filters ($\Delta P$ = 1 in. water) | | | Dust Loaded Filters ($\Delta P$ = 4 in.) | | |
| Safe | 4.32 | 3.47 | 3.12 | 3.90 | --- | 2.39 |
| Fail | 4.53 | 3.58 | 3.25 | 3.93 | --- | 2.90 |

In the case of both TK-39-5 and TK-37-1, the cell and air tunnel pressure will be increased by 1.3 psi, assuming equilibrium and no release via other vents or breached orifices. These differentials created across the exhaust HEPA filters would be far less than the tested maximum; failure of these two filter stages is improbable as a result of the postulated in-tank explosion.

Radionuclide inventories impacting the HEPA filters have potential for releasing contamination to the environment if the inventory is sufficiently high. According to Reference 9-6, dual HEPA filter penetration factors for 0.3 μ particulate matter are as indicated in the following table (the inverse of this value, called the decontamination factor, is also included):

| HEPA filter | Penetration factor (PF) | Decontamination factor (DF) |
|---|---|---|
| First stage | $5.0 \times 10^{-4}$ | $2.0 \times 10^{3}$ |
| Both stages | $1.0 \times 10^{-6}$ | $1.0 \times 10^{6}$ |

If a single HEPA filter reduces mist concentration from 1,000 mg/m$^3$ of air to 0.14 mg/m$^3$ of air (Ref. 9-6), giving a PF of $1.4 \times 10^{-4}$, and assuming the second stage of HEPA filtration has the same ratio of additional reduction as for particulate matter, then the PF and DF for mists are as indicated in the following table:

| HEPA filter | Penetration factor (PF) | Decontamination factor (DF) |
|---|---|---|
| First stage | $1.4 \times 10^{-4}$ | $7.14 \times 10^{3}$ |
| Both stages | $2.8 \times 10^{-7}$ | $3.57 \times 10^{6}$ |

In the case of TK-39-5, if the entire 150 m$^3$ of mist impacted the HEPA filters, such a mist concentration will result in an atmospheric release of $^{90}Sr$ of

$$\frac{2.8 \times 10^{-7}}{} \cdot \frac{150\ g}{} \cdot \frac{8.7\ KCi}{gal} \cdot \frac{1\ gal}{3{,}780\ mL} \cdot \frac{10^{9}\ \mu Ci}{KCi} \cdot \frac{1\ mL}{1.125\ g} = 85.9\ \mu Ci\ ^{90}Sr$$

Averaged over a week at one-half design flow rate of the ventilation system, atmospheric release will be:

$$\frac{85.9\ \mu Ci}{wk} \cdot \frac{1\ wk}{7\ days} \cdot \frac{1\ day}{24\ h} \cdot \frac{1\ h}{60\ min} \cdot \frac{1\ min}{37{,}500\ ft^3} \cdot \frac{1\ ft^3}{28{,}320\ mL} = 8.0 \times 10^{-12}\ \mu Ci/mL\ ^{90}Sr$$

This value does not exceed the Table II (Ref. 9-1) value of $3 \times 10^{-11}$ μCi/mL $^{90}Sr$ (soluble).

In the case of TK-37-1, on the same basis, such a mist concentration will result in an atmospheric release of $^{137}Cs$ of

$$\frac{2.8 \times 10^{-7} \quad 150\text{ g} \quad 6.25\text{ KCi} \quad 1\text{ gal} \quad 10^{9}\ \mu\text{Ci} \quad 1\text{ mL}}{\quad\quad\quad\quad \text{gal} \quad 3{,}780\text{ mL} \quad \text{KCi} \quad 1.1\text{ g}} = 63.0\ \mu\text{Ci}\ ^{137}Cs$$

Averaged over a week, same basis as TK-39-5, atmospheric release will be:

$$\frac{63.0\ \mu\text{Ci} \quad 1\text{ wk} \quad 1\text{ day} \quad 1\text{ h} \quad 1\text{ min} \quad 1\text{ ft}^3}{\text{wk} \quad 7\text{ days} \quad 24\text{ h} \quad 60\text{ min} \quad 37{,}500\text{ ft}^3 \quad 28{,}320\text{ mL}} = 5.9 \times 10^{-12}\ \mu\text{Ci/mL}$$

This value does not exceed the Table II (Ref. 9-1) value of $2 \times 10^{-9}$ μCi/mL $^{137}Cs$ (soluble).

9.10.1.6 Onsite/Offsite Personnel Effects. There are no personnel effects directly attributable to this scenario. All releases of radionuclides to the environment are within established guidelines of RHO-MA-139 (Ref. 9-1).

9.10.1.7 Secondary Effects. Because of the differential pressure between the canyon and cell, it is assumed that 50% of this contamination will be drawn back into this or adjacent cells. The remaining contamination will contaminate the canyon, thus requiring decontamination. Such a task necessitates a major effort, but current approved procedures are in effect for such a task. Although decontamination personnel could become contaminated when conducting cleanup operations in the cell and canyon, this should not be the case if established procedures are followed. The strontium or cesium solution from the ruptured tank will flow from the cell into the sump, then through the 24 in. cell drain line to the waste collection tank (Cell 10). In cases where there are no sumps, the liquid will flow to the depressed southeast corner of the cell floor, then be removed by jetting to Cell 10 via another tank in the cell. The waste tank in Cell 10 has a physical capacity of 10,000 gal and a cooling capacity of 2,000,000 Btu/h, which is adequate to cool the spilled contents from any single tank. However, if the explosion ruptured all tanks in Cell 37, volume and cooling capacities will be exceeded. Excess liquid will be pumped to available tanks elsewhere in B Plant until cooling capacity of TK-10 is not exceeded. Because the cooling coil in the ruptured tank would likely also be ruptured, cooling water to the coil would require being shut off within 10 min to avoid overflowing the waste collection tank.

Radioactive solutions forced into the pipe gallery and operating gallery piping systems could create radiation levels of several R/h (see Section 9.15). High radiation will be detected with immediate notification of personnel by alarms. Current procedures will be implemented to restore the area to normal background levels. If such procedures prove inadequate, a management approved plan will be devised for coping.

9.10.1.8 Preventives.

- Purge air to all tanks where hydrogen is evolved is the principal mechanism used to prevent the attainment of flammable mixtures. Hydrogen concentration is maintained at 2.0% by volume or less by this means.

- In the event of an electrical outage, the air compressors operate on an automatically instituted backup electrical supply.

- Electrically-operated equipment to the affected tank will be shut off if the air purge is lost. During such time, maintenance work will not be permitted on the tank.

9.10.1.9 Risk. The most feasible means for loss of purge air to occur without detection is both purge air and instrument failure. The failures required and their associated highest estimated probabilities of failure are indicated as follows.

| | |
|---|---|
| Loss of purge (process) air | $2.6 \times 10^{0}$/yr (Ref. 9-2) |
| Loss of purge (process) emergency air | $1.0 \times 10^{-3}$/demand (Ref. 9-2) |
| Instrument failure | $8.8 \times 10^{-2}$/yr (Ref. 9-3) |
| Personnel cognitive error, 1 h | $1.0 \times 10^{-3}$/yr (Ref. 9-3) |
| TOTAL PROBABILITY | $2.3 \times 10^{-7}$/yr |

This accident cannot occur by a single operational cause. Operating experience indicates that it is highly unlikely that the above quadruple failure would be unnoticed longer than 30 min, because of less direct indications which would be noticed by personnel surveillance.

Because radionuclides released to the environment per this scenario are below Table II limits (Ref. 9-1) they will not provide a dose above the limits indicated in Reference 9-5 for the indicated probability of occurrence. The risk postulated by this in-tank hydrogen accumulation and explosion scenario is, therefore, acceptable.

9.10.2 Full Cell Hydrogen Explosion

9.10.2.1 Cause and Source. For hydrogen accumulation in a cell to be a hazard, a situation must occur which will allow undetected accumulation for sufficient time to reach an explosive concentration. The only common cause which can produce such a situation is a seismic event. Otherwise, at least five single failures are necessary, and they must be undetected for sufficient time to permit a hazardous concentration of hydrogen.

Two of the failures necessary for this scenario must be loss of the B Plant exhaust system, and lack of detection of this loss. This can be postulated by ventilation failure and failure of the "low flow" alarm to the exhaust stack. The "low flow" indicator is monitored once each shift with readings recorded. These readings are reviewed and responded to, if necessary, by supervision. The third and fourth failures necessary are a leak in a tank, and loss of tank venting. The VVS line can become clogged, thus blocking the venting capability of the downstream portion of that section of the system. This result would be indicated by the differential pressure indicator, but would not be noted until routine surveillance was made.

Surveillance is routinely conducted once per shift. It is postulated that the "low flow" exhaust system indicator and the VVS differential pressure indicator are read at the very beginning of one shift and at the very end of the next shift. Immediately after the first readings are completed, all four failures mentioned above occur simultaneously, thus allowing maximum time for hydrogen accumulation. Sixteen hours elapse before surveillance again occurs. The fifth failure is a personnel cognitive error, in which surveillance by personnel is not accomplished at the indicated 16 h point and beyond.

Tanks TK-39-5 and TK-37-1 will be the sources for the hydrogen, and are located in Cells 39, and 37, respectively. It will again be assumed that each cell contains 150 $m^3$ of unoccupied volume. The hydrogen generation rates are assumed to be the same as in Table 9-10.

In the case of Cell 39, TK-39-5 is calculated to generate hydrogen (4 vol%) at the following rate:

$$\frac{55\ \text{gal}}{1\ \text{h}} \cdot \frac{3.78\ \text{L}}{\text{gal}} \cdot \frac{1\ \text{m}^3}{10^6\ \text{cm}^3} \cdot \frac{10^3\ \text{cm}^3}{\text{L}} = 0.21\ \text{m}^3/\text{h}$$

This value translates into 150 $m^3$ of 2.5% hydrogen in air generated in 16 h, or 150 $m^3$ of 4% hydrogen in air generated in 28.6 h, assuming a starting concentration of 0.0% hydrogen.

In the case of Cell 37, TK-37-1 is calculated to generate hydrogen (4 vol%) at the following rate:

$$\frac{51.3\ \text{gal}}{\text{h}} \cdot \frac{3.78\ \text{L}}{\text{gal}} \cdot \frac{1\ \text{m}^3}{10^6\ \text{cm}^3} \cdot \frac{10^3\ \text{cm}^3}{\text{L}} = 0.19\ \text{m}^3/\text{h}$$

This value also translates on the same basis into 150 $m^3$ of 2.0% hydrogen in air generated in 16 h, or 150 $m^3$ of 4% hydrogen in air generated in 31.6 h.

9.10.2.2 Energy Release. As indicated in Section 9.10.1.2 an ensuing explosion in Cell 39 or Cell 37 will increase the pressure to approximately 100 lb/in.$^2$. The resulting shock wave could produce a transient maximum pressure within the cell which could rupture all other vessels therein. An aerosol of part of the liquid contents will be produced.

9.10.2.3 Containment System Effects. Because the cover blocks require only 7.8 lb/in.$^2$ to be raised, the full-cell hydrogen explosion will raise them. It is postulated that such pressures as indicated in the previous section will totally displace the cover blocks, allowing free entry from the cell to the canyon. The ventilation system orifices around the cover blocks and between the cell and the air tunnel would relieve a portion of the pressure, but it is assumed not sufficiently to prevent cover block displacement.

9.10.2.4 Occupational Personnel Effects. Section 9.10.2.9 indicates the incredibility of such an accident taking place during normal operating procedures. Inherently required is sufficient time for 4% hydrogen to accumulate in the cell (37.5 h). Disability of the ventilation system will, because of approved emergency procedures, preclude entry of personnel into the canyon when the ventilation system shuts down. There would, therefore, be no personnel in the canyon if the explosion occurs.

9.10.2.5 Confinement System Effects. If the increased pressure of the full cell hydrogen explosion were to be equally distributed throughout the canyon, crane cabway, cells, and air tunnel (combined volume = ~55,500 m$^3$), the pressure will be increased by approximately 0.2 lb/in.$^2$. According to Table 9-11, this increase in pressure is not sufficient to cause a breach in the HEPA filters.

It is postulated that 1 g/m$^3$ of this mist remains suspended and impacts the HEPA filter when the exhaust system is restarted. With a filtration factor of $1.4 \times 10^{-6}$ (Section 9.10.1.5) the quantity of mist exhausting to the atmosphere is $(55{,}500\ g)(2.8 \times 10^{-7}) = 1.55 \times 10^{-2}$ g mist.

9.10.2.6 Onsite/Offsite Personnel Effects. In the case of Cell 39, if any or all tanks are ruptured, the total radioactivity exhausted to the atmosphere is

$$\frac{1.55 \times 10^{-2}\ g \;\Big|\; 8.7\ KCi \;\Big|\; 1\ gal \;\Big|\; 1\ mL \;\Big|\; 10^9\ \mu Ci}{\phantom{1.55 \times 10^{-2}\ g} \;\Big|\; gal \;\Big|\; 3{,}780\ mL \;\Big|\; 1.125\ g \;\Big|\; KCi} = 3.2 \times 10^4\ \mu Ci\ {}^{90}Sr$$

Averaging over 168 h, and 37,500 cfm flow rate, this value translates to a release concentration of

$$\frac{3.2 \times 10^4\ \mu Ci \;\Big|\; 1\ h \;\Big|\; 1\ min \;\Big|\; 1\ ft^3}{168\ h \;\Big|\; 60\ min \;\Big|\; 37{,}500\ ft^3 \;\Big|\; 28{,}381\ mL} = 3.0 \times 10^{-9}\ \mu Ci/mL\ {}^{90}Sr$$

This concentration exceeds the Table II (Ref. 9-1) limit of $3 \times 10^{-11}$ µCi/mL $^{90}Sr$ (soluble). Doses received by the maximum individuals are shown in the following table.

| Maximum individual | Time (yr) | Doses in rem | | |
|---|---|---|---|---|
| | | Whole body | Bone | Lung |
| Onsite | 1 | $8.7 \times 10^{-5}$ | $1.3 \times 10^{-3}$ | $2.4 \times 10^{-5}$ |
| | 50 | $1.0 \times 10^{-3}$ | $1.5 \times 10^{-2}$ | $2.4 \times 10^{-5}$ |
| Offsite (Hwy. 240) | 1 | $1.7 \times 10^{-5}$ | $2.5 \times 10^{-4}$ | $4.6 \times 10^{-6}$ |
| | 50 | $2.0 \times 10^{-4}$ | $3.0 \times 10^{-3}$ | $4.6 \times 10^{-6}$ |
| Offsite (Site Boundary) | 1 | $2.8 \times 10^{-5}$ | $2.2 \times 10^{-4}$ | $2.9 \times 10^{-6}$ |
| | 50 | $3.5 \times 10^{-3}$ | $1.4 \times 10^{-2}$ | $2.9 \times 10^{-6}$ |

This scenario is classed as low hazard (Ref. 9-5).

In the case of Cell 37, the total radioactivity exhausted to the atmosphere is

$$\frac{1.55 \times 10^{-2}\ \text{g} \mid 6.25\ \text{KCi} \mid 1\ \text{gal} \mid 1\ \text{mL} \mid 10^{9}\ \mu\text{Ci}}{\text{gal} \mid 3{,}780\ \text{mL} \mid 1.1\ \text{g} \mid \text{kCi}} = 2.34 \times 10^{4}\ \mu\text{Ci}\ ^{137}\text{Cs}$$

Averaging over 168 h and 37,500 cfm flowrate, this value translates to a release concentration of

$$\frac{2.34 \times 10^{4}\ \mu\text{Ci} \mid 1\ \text{h} \mid 1\ \text{min} \mid 1\ \text{ft}^3}{168\ \text{h} \mid 60\ \text{min} \mid 37{,}500\ \text{ft}^3 \mid 28{,}381\ \text{mL}} = 2.18 \times 10^{-9}\ \mu\text{Ci/mL}\ ^{137}\text{Cs}$$

This concentration exceeds the Table II (Ref. 9-1) limit of $2 \times 10^{-9}$ μCi/mL $^{137}Cs$ (soluble). Doses received by the maximum individuals are shown in the following table (Ref. 9-17).

| Maximum individual | Time (yr) | Doses in rem | | |
|---|---|---|---|---|
| | | Whole body | Bone | Lung |
| Onsite | 1 | $1.7 \times 10^{-5}$ | $1.8 \times 10^{-5}$ | $4.5 \times 10^{-6}$ |
| | 50 | $1.9 \times 10^{-5}$ | $2.2 \times 10^{-5}$ | $5.0 \times 10^{-6}$ |
| Offsite (Hwy 240) | 1 | $3.3 \times 10^{-6}$ | $3.5 \times 10^{-6}$ | $8.7 \times 10^{-7}$ |
| | 50 | $3.8 \times 10^{-6}$ | $4.2 \times 10^{-6}$ | $9.8 \times 10^{-7}$ |
| Offsite (Site Boundary) | 1 | $2.4 \times 10^{-5}$ | $2.4 \times 10^{-5}$ | $6.2 \times 10^{-6}$ |
| | 50 | $1.2 \times 10^{-4}$ | $1.2 \times 10^{-4}$ | $8.8 \times 10^{-5}$ |

This scenario is classed as low hazard (Ref. 9-5).

9.10.2.7 Secondary Effects. These effects are the same as given in Section 9.10.1.7.

9.10.2.8 Preventives. These factors are the same as given in Section 9.10.1.8.

9.10.2.9 Risk. The most feasible means for a full cell of an explosive mixture of hydrogen and air to accumulate operationally without detection is failure of the following, including highest estimated probability of failure:

| | |
|---|---|
| Ventilation exhaust | $2.6 \times 10^{-7}$/yr (Ref. 9-2) |
| Stack "low flow" alarm system | $8.8 \times 10^{-2}$/yr (Ref. 9-2) |
| Integrity of tank | $2.0 \times 10^{-1}$/yr* |
| VVS subsystem | $2.0 \times 10^{-1}$/yr* |
| Personnel cognitive error, 37.5 h | $1.0 \times 10^{-6}$/demand (Ref. 9-3) |
| TOTAL | $9.2 \times 10^{-16}$/yr |

This accident cannot occur by a single operational cause. Operating experience indicates that it is highly unlikely that the above five-fold failure would occur, because of less direct indication which would be noticed by personnel surveillance. Nevertheless, the combined probability of all five of the above events occurring simultaneously is $9.2 \times 10^{-16}$/yr, or approximately once every $1.1 \times 10^{-15}$ yr. This probability value dictates that this scenario is determined to be not credible (Ref. 9-5), except by a seismic event. These values translate to a risk of $1.2 \times 10^{-18}$ rem/yr, which is considered to be acceptable (Ref. 9-5).

*Assumed from operating experience.

### 9.10.3 Full Canyon Hydrogen Explosion

Because the full cell hydrogen explosion is considered to be incredible (Section 9.10.2.9) due to operational failures, a full canyon hydrogen explosion will not be considered further in the same context.

## 9.11 AMMONIA ACCUMULATION AND EXPLOSION

Anhydrous ammonia is used in formulating aqueous ammonium carbonate solutions. These solutions are then used in the $^{137}Cs$ recovery process. If a mixture of ammonia and air accumulated in the vapor space of a processing vessel and were ignited, an explosion and undesirable consequences could result. Two varieties of potential ammonia explosion accidents have been identified:

- In-Tank - Relatively small quantities of ammonia collect and explode within the vapor space of a partially full process tank, rupturing all tanks in the cell, but causing only minor damage to the cell and confinement systems.

- Full Cell - Loss of cell ventilation will allow a large quantity of ammonia to slowly accumulate in a cell atmosphere if there is a leak in the process vessel, and a resulting explosion can be postulated to breach the cell and cause loss of confinement.

When contending with combination effects of an accident of this type, it is realized that variation of the aqueous volume of a given tank, the ammonia concentration, and the temperature of the solution will affect the time necessary for accumulation of ammonia in the vapor space of that tank. In addition, the explosive likelihood is directly related to the temperature, but inversely related to the humidity. A trade-off must therefore be made between the quantity of aqueous solution necessary for maximum contamination effects, and both the quantity and concentration of ammonia in the vapor space for maximum explosion effects.

This scenario relates to tank TK-19-1, which is a 14,000 gal tank postulated to contain 2,000 gal of cesium solution, with the vapor space occupied by ammonia in dry air at the lower flammability limit for the particular temperature. The rate of ammonia evolution from the solution cannot be calculated, so it is not known how fast the required ammonia will be generated. Additional assumptions for this scenario are as follows.

- Ammonia is completely oxidized to nitrogen gas and water vapor according to

$$4\ NH_3\ (g) + 3\ O_2\ (g) \longrightarrow 2\ N_2\ (g) + 6\ H_2O\ (g)$$

| ammonia gas | oxygen gas | nitrogen gas | water vapor |
|---|---|---|---|

Heat of combustion is 8,010 Btu/lb of $NH_3$ (Ref. 9-18) (Less than total oxidation will attenuate the explosion).

- The reaction results in an explosion.
- The concentration of ammonia and the oxygen in the containment atmosphere are in stoichiometric proportions, i.e., 21.1% $NH_3$, 15.8% $O_2$, and 63.2 vol% $N_2$ (Any other proportions will attenuate the explosion).
- Water vapor is absent prior to ignition (Water vapor will attenuate the explosion. At 10.8% $H_2O$ and 20.8% $NH_3$, no flame survives (Ref. 9-19).
- Air will suspend a maximum of 1,000 mg aerosol/mist per $m^3$ of air (Ref. 9-14).
- A single HEPA filter will reduce the exiting concentration of aerosol/mist in air to 0.14 mg solution per cubic meter of air (Ref. 9-14).
- The ratio of DFs for mists/aerosols in air between single HEPA and double HEPA filters is the same as in the case of particulate matter (see Section 9.10.1.5).

  DF = $3.57 \times 10^6$ for mists/aerosols through double HEPAs

### 9.11.1 In-Tank Ammonia Explosion

9.11.1.1 Cause and Source. Ammonia is present in various process solutions. This ammonia can be slowly evolved because of conditions of temperature, alkalinity, and differential pressures. Despite precautions taken to prevent hazardous concentrations of ammonia from accumulating, deviation from administrative procedures or non-detection of improper functioning of temperature control systems can lead to an explosion. In CAW processing, only cesium solutions will contain ammonia. In the cesium recovery process TK-19-1 is a larger volume tank than any other, and its volume will allow a greater quantity of an explosive ammonia-air mixture.

Normally, vessel atmospheres are not intentionally exposed to high temperature ignition sources. Nevertheless, any source of sufficient energy can initiate such an explosion.

9.11.1.2 Energy Release. According to Reference 9-21

5.2 x absolute initial pressure = absolute explosion pressure

With initial pressure being atmospheric (14.7 psi), the explosion pressure will be 76.4 psia, or 61.7 psig for the postulated relative concentrations of reactants, assuming the same relationship exists as in Reference 9-21. Tank TK-19-1 is an oblong tank in cross-section, and will probably be destroyed; it is postulated that the tank actually ruptures. It is also assumed that an aerosol/mist is created which fills the unoccupied volume of the cell (150 $m^3$) at maximum mist concentration of 1,000 $mg/m^3$.

According to Reference 9-20, the flame temperature of the explosion is 1,630°C. Assuming this as the equilibrium temperature of the explosion in the tank, and using 76.4 psia calculated above the PV/T relationship can be used to calculate the pressure exerted in the cell.

At the same initial conditions of volume and temperature as the cell, and using the relationship of

$$\frac{P_1V_1}{T_1} = \frac{P_2V_2}{T_2},$$

the explosion products will exert a ΔP of

$$\frac{(76.4)(12{,}000)}{1{,}903} = \frac{P_2(38{,}500)}{353} \text{ and}$$

$$P_2 = 4.4 \text{ psig} = 19.1 \text{ psia}$$

The difference between initial cell temperature (353°K) and confined explosion temperature (1,903°K) is 1,550°K. The difference between initial cell pressure (14.7 psia) and confined explosion pressure (76.4 psia) is 61.7 psia. Since temperature and pressure are directly related, it is assumed that the change in temperature is proportionally identical to the change in pressure, under otherwise identical conditions. Therefore, the pressure increase of the cell volume when TK-19-1 ruptures is:

$$\frac{(76.4)(12{,}000)}{1{,}903} = \frac{P_2(38{,}500)}{711.4} \text{ and}$$

$$P_2 = 8.9 \text{ psig} = 23.6 \text{ psia}$$

9.11.1.3 Containment System Effects. Because of the ventilation system orifices around the cover blocks, and between the cell and air tunnel, the pressure increase might not result in raised cover blocks (7.8 $lb/in^2$ required) or escape into the canyon. However, in the event that such a



9312899234 7

phenomenon occurred, a portion of the airborne contents enter the canyon. It is assumed that there are 150 $m^3$ of unoccupied volume in the cell. This volume can contain a maximum of 150 g of aerosol/mist, which will be generated from the tank contents. Fifty percent of this quantity is postulated to enter the canyon by momentarily negating the negative pressure created by the ventilation system. The contamination entering the canyon will then be

$$\frac{75\ \text{g}}{} \left| \frac{1\ \text{mL}}{1.1\ \text{g}} \right| \frac{300\ \text{Ci}}{\text{gal}} \left| \frac{1\ \text{gal}}{3{,}780\ \text{mL}} \right. = 5.4\ \text{Ci}\ ^{137}\text{Cs}$$

9.11.1.4 Occupational Personnel Effects. Assumptions are the same as in Section 9.10.1.4. With 5.4 Ci $^{137}Cs$ diluted 10-fold, the activity is then

$$\frac{10^6\ \mu\text{Ci}}{\text{Ci}} \left| \frac{5.4\ \text{Ci}}{1{,}500\ \text{m}^3} \right| \frac{1\ \text{m}^3}{10^6\ \text{mL}} = 3.6 \times 10^{-3}\ \mu\text{Ci/mL}\ ^{137}\text{Cs}$$

Dose received is then as follows:

$$\frac{3.6 \times 10^{-3}\ \mu\text{Ci}}{\text{mL}} \left| \frac{6\ \text{s}}{50\ \text{s}} \right| \frac{450\ \text{mL}}{} = 1.9 \times 10^{-1}\ \mu\text{Ci}\ ^{137}\text{Cs}$$

Dose commitment (Ref. 9-11) to such an individual is then

| Time (yr) | Dose Commitment (rem) | | |
|---|---|---|---|
| | Whole Body | Bone | Lung |
| 1 | $6.5 \times 10^{-3}$ | $7.0 \times 10^{-3}$ | $1.7 \times 10^{-3}$ |
| 50 | $7.5 \times 10^{-3}$ | $8.5 \times 10^{-3}$ | $1.9 \times 10^{-3}$ |

These values do not exceed Rockwell guidelines (Ref. 9-4).

An ammonia accumulation is expected to take more time to occur than is necessary for equipment failure to be detected. Upon recognition of such failure, approved emergency precautions preclude the presence of occupational personnel in the canyon.

9.11.1.5 Confinement System Effects. If the entire 150 $m^3$ of mist/aerosol generated by the explosion entered the air tunnel, they would then impact the HEPA filters. In such a situation, it is assumed that the pressure effects are likewise translated.

In the case of TK-19-1, the pressure increase in the cell and air tunnel will be less than one psig, assuming equilibrium and no release via other vents and breached orifices. This differential created across the exhaust HEPA filters will be far less than the tested maximum (Table 9-11); failure of these two filter stages is improbable as a result of the postulated in-tank ammonia explosion.

If a $m^3$ of air contains 1,000 mg of mist, the air exhausted to the atmosphere will contain $2.8 \times 10^{-4}$ mg/$m^3$ of mist in air (Section 9.10.1.5).

In the case of Cell 19, if the entire 150 $m^3$ of mist impacted the HEPA filters, such a mist concentration will result in an atmospheric release of $^{137}Cs$ of

$$\frac{2.8 \times 10^{-4}\ \text{mg}}{\text{m}^3} \cdot \frac{150\ \text{m}^3}{} \cdot \frac{300\ \text{Ci}}{\text{gal}} \cdot \frac{1\ \text{gal}}{3{,}780\ \text{mL}} \cdot \frac{1\ \text{mL}}{1{,}100\ \text{mg}} = 3.0 \times 10^{-6}\ \text{Ci}\ ^{137}\text{Cs}$$

Averaged over a week at one-half design flow rate of the ventilation system, atmospheric release will be:

$$\frac{3.0 \times 10^{-6}\ \text{Ci}}{\text{wk}} \cdot \frac{1\ \text{wk}}{268\ \text{h}} \cdot \frac{1\ \text{h}}{60\ \text{min}} \cdot \frac{1\ \text{min}}{37{,}500\ \text{ft}^3} \cdot \frac{1\ \text{ft}^3}{28{,}320\ \text{mL}} \cdot \frac{10^6\ \mu\text{Ci}}{\text{Ci}}$$

$$= 1.76 \times 10^{-13}\ \mu\text{Ci/mL}$$

This value does not exceed the Table II (Ref. 9-1) value of $2 \times 10^{-9}$ µCi/mL $^{137}Cs$ (soluble).

9.11.1.6 Onsite/Offsite Personnel Effects. There are no onsite/offsite personnel effects directly attributable to this scenario. All releases of radionuclides to the environment are within established guidelines of RHO-MA-139 (Ref. 9-1).

9.11.1.7 Secondary Effects. After the momentary negation of the negative differential pressure between the canyon and the cell, an estimated 50% of the contamination will be drawn back into the cell. The remaining contamination will require canyon decontamination efforts. Although such a task necessitates a major effort, current approved procedures are in effect for such a task. The cesium from the ruptured tanks will flow from the cell and

through the 24-in. cell drain line to the waste collection tank (Cell 10). The waste tank in Cell 10 has a physical capacity of 10,000 gal and a cooling capacity of 2,000,000 Btu/h, which is adequate to cool the spilled contents.

Because the cooling coil in the ruptured tank would also likely be ruptured, cooling water to the coil would require being shut off within 10 min to avoid overflowing the waste collection tank.

Radioactive solutions forced into the pipe gallery and operating gallery piping systems could create radiation levels of several R/h (see Section 9.15). High radiation will be detected with immediate notification of personnel by alarms. Current procedures will be implemented to restore the area to normal background levels, or management-approved procedures will be devised.

9.11.1.8 Preventives.

- All solutions containing ammonia are normally maintained at less than 39°C, at which ammonia concentration will be less than 15% in the vapor space.
- The concentration of ammonia in solutions is normally maintained below that required to attain flammable mixtures at equilibrium at any temperature.
- The presence of water vapor or any other gas in the vapor space will attenuate an explosion. Water vapor at greater than 10.8% and ammonia at less than 20.8% will preclude any ignition of ammonia (Ref. 9-19).
- Ignition sources having sufficient energy to initiate an ammonia explosion are not likely to be present. A value of 680 mJ is necessary (Ref. 9-21), which is 10 times that used in automobile test engines, and 1,000 times that required to initiate a hydrocarbon or hydrogen explosion.
- Electrically operated equipment to the affected tank will typically be shut off if the ammonia-concentration controls are lost. During such time, maintenance work will not be permitted on the tank.

9.11.1.9 Risk. The most feasible operational means for loss of control to occur without detection is for an instrument to fail. The failures required and their associated highest probabilities of failure are indicated as follows:

| | |
|---|---|
| Instrument failure | $8.8 \times 10^{-2}$/yr (Ref. 9-2) |
| Personnel cognitive error, 16 h | $6.0 \times 10^{-6}$/demand (Ref. 9-3) |
| TOTAL | $5.3 \times 10^{-7}$/yr |

This accident can occur by a single operational cause in conjunction with personnel error. Operating experience indicates that it is highly unlikely that the above quadruple failure would be unnoticed longer than 30 min, because of less direct indications which would be noticed by personnel surveillance. Nevertheless, the probability of both of the above failures occurring simultaneously, and lasting for 16 h, is $5.3 \times 10^{-7}$/yr, or once approximately every $1.9 \times 10^{6}$ yr.

Because radionuclides released to the environment per this scenario are below Table II limits (Ref. 9-1), they will not provide a dose above the limits indicated in Reference 5 for the indicated probability of occurrence. The risk postulated by this in-tank ammonia accumulation and explosion scenario is, therefore, acceptable (Ref. 9-5).

### 9.11.2 Full-Cell Ammonia Explosion

9.11.2.1 Cause and Source. For ammonia accumulation in a cell to be a hazard, a situation must occur for sufficient time to reach an explosive concentration. No single operational failure can produce such a situation. At least five single operational failures are necessary, and they must be undetected for sufficient time to permit a hazardous concentration of ammonia.

Two of the failures necessary for this scenario must be loss of the B Plant exhaust system, and lack of detection of this loss. This can be postulated by ventilation failure and failure of the "low flow" alarm to the exhaust stack. The "low flow" indicator is monitored each shift with readings recorded. These readings are reviewed and responded to, if necessary, by supervision. The third and fourth failures necessary are a leak in an appropriate tank, and loss of tank venting. The VVS#2 can become clogged, thus blocking the venting capability of the downstream portion of that section of the system. This result will be indicated by the appropriate differential pressure ($\Delta P$) indicator, but would not be noted until routine surveillance was made. This lack of timely surveillance is the fifth failure.

Surveillance is routinely conducted once per shift. It is postulated that the "low flow" exhaust system indicator and the VVS#2 $\Delta P$ indicator are read at the very beginning of one shift and at the very end of the next shift. Immediately after the first readings are completed, all four failures mentioned above occur simultaneously, thus allowing maximum time for ammonia accumulation. Sixteen hours elapse before surveillance again occurs.

Tank TK-19-1, located in Cell 19, will again be the source for the ammonia. It will again be assumed that Cell 19 contains 150 $m^3$ of unoccupied volume. The ammonia generation rates cannot be determined because of imprecisely controlled factors which affect such generation, and which are related to each other in various ways. The actual contained volume of solution in the tank is not significant, because it is assumed

that an explosive concentration of ammonia can be realized in the cell in less than 16 h. Otherwise, assumptions are identical to those in Section 9.11.

9.11.2.2 Energy Release. As in Section 9.11.1.2,

5.2 x absolute initial pressure = absolute explosion pressure,

thus indicating an explosion pressure of 76.4 psia, or 61.7 psig. The resulting shock wave could produce a transient maximum pressure within the cell, which will rupture TK-19-1, converting a portion of the liquid contents to an aerosol/mist, which fills the unoccupied volume of the cell (150 $m^3$) at maximum mist concentration of 1,000 $mg/m^3$.

9.11.2.3 Containment System Effects. Because the cover blocks require only 7.8 $lb/in^2$ to be raised, the full cell ammonia explosion will raise them. It is postulated that such pressures as indicated in the previous section will totally displace the cover blocks, allowing free entry from the cell to the canyon. The ventilation system orifices around the cover blocks and between the cell and the air tunnel would relieve a portion of the pressure, but probably not sufficiently to prevent cover block displacement.

9.11.2.4 Occupational Personnel Effects. It is postulated that an occupational worker will receive maximum mist concentration of 1 $g/m^3$ (Ref. 9-15). Such a dose commitment will be 10 times that received from the in-tank explosion in Section 9.11.1.4. The dose commitments are then as follows:

| Time (yr) | Dose Commitment (rem) | | |
|---|---|---|---|
| | Whole Body | Bone | Lung |
| 1 | $6.5 \times 10^{-2}$ | $7.0 \times 10^{-2}$ | $1.7 \times 10^{-2}$ |
| 50 | $7.5 \times 10^{-2}$ | $8.5 \times 10^{-2}$ | $1.9 \times 10^{-2}$ |

These values do not exceed Rockwell annual guidelines (Ref. 9-4). However, more time will be required to fill a cell sufficiently with ammonia to produce an explosion than to do so with a tank, as indicated in Section 9.11.1.4. Upon recognition of relevant operational failure(s), approved emergency precautions preclude the presence of occupational personnel in the canyon.

9.11.2.5 Confinement Systems Effects. If the increased pressure of the full-cell ammonia explosion were to be equally distributed throughout the canyon, crane cabway, cells, and air tunnel (combined volume = 55,500 $m^3$),

the pressure will be increased by approximately 0.1 lb/in.$^2$. According to Table 9-11, this increase in pressure is not sufficient to cause a breach in the HEPA filters.

It is postulated that all of this mist remains suspended and impacts the HEPA filter when the exhaust system is restarted. With a penetration factor of $2.8 \times 10^{-7}$ (Section 9.10.1.5), the quantity of mist exhausting to the atmosphere is

$$(55{,}500\ \text{g})(2.8 \times 10^{-7}) = 1.55 \times 10^{-2}\ \text{g mist}$$

9.11.2.6 Onsite/Offsite Personnel Effects. The activity exhausted to the atmosphere is

$$\frac{1.55 \times 10^{-2}\ \text{g}}{} \left| \frac{300\ \text{Ci}}{\text{gal}} \right| \frac{1\ \text{gal}}{3{,}780\ \text{mL}} \left| \frac{1\ \text{mL}}{1.1\ \text{g}} \right| \frac{10^6\ \mu\text{Ci}}{\text{Ci}} = 1.12 \times 10^3\ \mu\text{Ci}\ {}^{137}\text{Cs}$$

Averaging over 168 h and 37,500 cfm flow rate, this value translates to a release concentration of

$$\frac{1.12 \times 10^3\ \mu\text{Ci}}{168\ \text{h}} \left| \frac{1\ \text{h}}{60\ \text{min}} \right| \frac{1\ \text{min}}{37{,}500\ \text{ft}^3} \left| \frac{1\ \text{ft}^3}{28{,}381\ \text{mL}} \right. = 1.04 \times 10^{-10}\ \mu\text{Ci/mL}\ {}^{137}\text{Cs}$$

This concentration does not exceed the Table II (Ref. 9-1) limit of $2 \times 10^{-9}$ µCi/mL $^{137}$Cs (soluble). There are no onsite/offsite effects directly attributable to this scenario. All releases of radionuclides to the atmosphere are within established guidelines of RHO-MA-139 (Ref. 9-1). This scenario is classed as low hazard, with acceptable risk (Ref. 9-15).

9.11.2.7 Secondary Effects. These effects are the same as in Section 9.11.1.7.

9.11.2.8 Preventives. These factors are the same as in Section 9.11.1.8.

9.11.2.9 Risk. The most feasible means for a full cell of an explosive mixture of ammonia and air to occur without detection is failure of the following, including highest estimated probability of failure:

| | |
|---|---|
| Ventilation exhaust | $2.6 \times 10^{-7}$/yr (Ref. 9-2) |
| Stack "low flow" alarm system | $8.8 \times 10^{-2}$/yr (Ref. 9-2) |
| Integrity of tank | $2.0 \times 10^{-1}$/yr* |
| VVS#2 subsystem | $2.0 \times 10^{-1}$/yr* |
| Personnel cognitive error, 30 min | $1.0 \times 10^{-2}$/demand (Ref. 9-3) |
| TOTAL | $9.2 \times 10^{-12}$/yr |

Operating experience indicates that it is highly unlikely that the above five-fold failure would be unnoticed longer than 30 min, because of less direct indications which would be noticed by personnel surveillance. Nevertheless, the combined probability of all five of the above events occurring simultaneously, and lasting for 30 min, is $9.2 \times 10^{-12}$/yr, or approximately once every $8.3 \times 10^{11}$ yr. This probability value dictates that this scenario is determined to be not credible (Ref. 9-5).

With average weekly concentration (see Section 9.11.2.6) below Table II guidelines, radionuclides released to the environment per this scenario will not provide a dose rate above the limits indicated in Reference 9-5 for the indicated probability of occurrence. The risk postulated by this full cell ammonia accumulation and explosion is, therefore, acceptable.

## 9.12 FIRE

In almost any facility which processes radionuclide inventories, one of the most serious hazards is considered to be a fire which affects the HEPA filtration system. There are two major situations which can have such effects. The first situation is one in which smoke from the fire affects the filtration/ventilation capabilities of the system by plugging the HEPA filter. The second situation is one in which a HEPA filter is impacted directly by a fire, and in which the filter may be consumed by the fire.

Portions of CAW processing involve use of liquid organic materials which are flammable. These materials are normal paraffin hydrocarbon (NPH), tributyl phosphate (TBP), and di(2-ethylhexyl)-phosphoric acid ($D_2$ EHPA). In addition, there can be various flammable solid materials contributing to the fire, such as rags, paper, sheet polyethylene.

This scenario considers a fire that occurs in Cell 27, for which assumptions are as follows:

- 3,000 gal of liquid organic are at risk
- The composition of this material is 60% NPH, 10% TBP, and 30% $D_2$ EHPA. Specific gravity is 0.8

*Assumed from operating experience.

- The radioactive inventory is 1.0 Ci/gal $^{90}Sr$
- Burning rate of this spilled material is 8 in./h
- All strontium and phosphorus in the burned material is converted to particulate oxides, and 1.0% of the $^{90}Sr$ becomes airborne
- The burning takes place with 85% effective combustion
- Chemical formulas of the liquid organic materials are: NPH-$C_{12}H_{26}$, TBP-$C_{12}H_{27}PO_4$, and $D_2EHPA$-$C_{16}H_{35}PO_4$.

### 9.12.1 Cause and Source

It is postulated that a cover block from Cell 27 is accidentally dropped into the cell, thus simultaneously rupturing TK-27-3, spilling its contents into the cell, and producing a spark from a "hot" ruptured electrical jumper. This spark then ignites vapors evolving from the spilled liquid. It is also postulated that, at the time, a sufficient quantity of debris is in the canyon for the debris to be drawn into and plug the sewer line leading to TK-10-1. The conditions of this scenario make academic the operation of the tank weight factor detector alarm, the cell leak detector alarm, and the heat detector alarm. It is also assumed that this accident causes the tank weight factor detector, the cell leak detector, and the heat detector to become inoperable.

### 9.12.2 Energy Release

It is postulated that the three constituents of the liquid organic material burn according to the following reactions:

<u>NPH</u>: $2\ C_{12}H_{26} + 33\ O_2 \longrightarrow 4\ C + 20\ CO_2 + 26\ H_2O$

| NPH liquid | oxygen gas | carbon particulate | carbon dioxide gas | water vapor |
|---|---|---|---|---|

<u>TBP</u>: $2\ C_6H_{15}PO_4 + 16\ O_2 \longrightarrow 2\ C + 10\ CO_2 + 15\ H_2O + P_2O_5$

| TBP liquid | oxygen gas | carbon particulate | carbon dioxide gas | water vapor | phosphorous oxide particulate |
|---|---|---|---|---|---|

$\underline{D_2EHPA}$: $2\ C_{16}H_{35}PO_4 + 43\ O_2 \longrightarrow$

| $D_2EHPA$ liquid | oxygen gas | | |
|---|---|---|---|
| $5\ C\ +$ | $27\ CO_2\ +$ | $35\ H_2O\ +$ | $P_2O_5$ |
| carbon particulate | carbon dioxide gas | water vapor | phosphorous oxide particulate |

The volume of organic liquid in this scenario (3,000 gal) is calculated to occupy a depth of the cell as follows:

$$\text{depth} = \frac{3{,}000\ \text{gal}}{13.0\ \text{ft} \times 17.67\ \text{ft}} \left| \frac{1\ \text{ft}^3}{7.48\ \text{gal}} \right| \frac{12\ \text{in.}}{\text{ft}} = 21.0\ \text{in.}$$

An 8 in./h burn rate is assumed, and results in a fire lasting for 2.63 h or approximately 158 min if not extinguished in the meantime. This liquid, with its composition and combustion reactions as indicated, will generate 91.9 lb of carbon particulate and 81.2 lb of $P_2O_5$ particulate per hour.

At 1 Ci/gal $^{90}Sr$, this liquid material contains 3,000 Ci of $^{90}Sr$, which will be released at 0.19 Ci of $^{90}Sr$/min. The portion of this radioactivity which impacts the HEPA filter depends on the manner in which this scenario is further developed (see Section 9.12.5).

### 9.12.3 Containment System Effects

The secondary containment system (Cell 27) is purposefully breached when the cover block is initially removed, at which time debris is drawn into the cell. The primary containment system (TK-27-3) is accidentally breached when the cover block falls onto the tank, ruptures it, and the tank contents spill onto the cell floor. The cascading liquid then washes debris into the drain, and causes the drain to become blocked. It is postulated that resulting smoke is transported entirely to the air tunnel, because there is insufficient time prior to fire suppression for sufficient particulate material to be generated to clog the filter (see Section 9.12.5.1).

### 9.12.4 Occupational Personnel Effects

It is postulated that there are only minor direct effects to occupational personnel from this scenario. There may be contamination from splashed organic liquid or smoke in the canyon in the vicinity of Cell 27. However, because the cover block is being lifted or replaced, there will not be personnel in the immediate area when the accident occurs.

### 9.12.5 Confinement System Effects

Smoke and radioactive particulate matter are drawn into the air tunnel and impact the exhaust HEPA filters. The extent to which this impact occurs depends on which variation of this scenario is being considered, of which there are two, as follows:

- Only smoke and radioactive particulate matter impact the HEPA filter
- Flaming debris also impacts the HEPA filter, and is sufficient for initiating a filter fire.

These two variations are addressed separately in the following subsections.

9.12.5.1 HEPA Filter Impacted only by Smoke and Radioactive Particulate Matter. Even though the cell heat detector is made inoperable by the conditions of the postulated accident, its failure will, nevertheless, initiate a "trouble" alarm in the dispatcher's office. Immediately following the accident, the crane operator will report the accident by radio to the dispatcher's office and confirm that there is a fire. This confirmation will tend to negate further precautionary investigation for confirmation additional to the heat detector alarm. It is assumed that the cell "light water" spray system, which is a foam fire suppression system, will be manually activated and the fire extinguished within five minutes; this system is installed in such a manner that proper functioning is not likely to be affected by the accident.

According to the calculations in Section 9.12.2, this fire will produce the following quantities of indicated materials in 5 min:

- 7.7 lb of carbon particulates
- 6.8 lb of $P_2O_5$ particulates
- 0.95 Ci $^{90}Sr$ oxide particulates (0.008 g).

Ignoring the physical contribution of the strontium, because of its relatively low weight, the combined $P_2O_5$ and carbon quantities equals 14.4 lb if all generated material is transported to the HEPA filters. This quantity, assumed to impact only the HEPA filters (the pre-filters are bypassed), will cause an increase of 0.5 in. W.G. in $\Delta P$ (Ref. 9-22). Because HEPA filters used in this type of application are usually removed

from service due to physical loadings rather than radioactive loadings, it is postulated that this extent of indicated physical loading will not preclude continued use, based on a maximum permitted $\Delta P$ of 4 in. W.G.

Actually, the canyon exhaust air stream contains a supervised heat detection system with detectors before and after the filter cells. These detectors, when subjected to 140°F or above, will initiate:

- Automatic diversion of the exhaust air from the HEPA filters to the sand filter within 5 min
- Alarm in dispatcher's office
- Alarm at the central fire station
- Shut off the canyon supply fans
- Activate the 5 gpm tunnel water spray.

It has been reported that there is increased penetration of HEPA filters at elevated temperatures, as high as 3% penetration at temperatures being considered in this scenario (Ref. 9-23). Assuming that only two stages are in use and that all particulate material generated by the fire in 5 min impacts the HEPA filters, the radioactive impact to the HEPA filter will result in a release to the atmosphere of 3% of the load on the filter. Assuming a 150 R/h reading from the radiation detector located 3 ft from the first filter face, no load on the second HEPA, and a 50/50 mixture of filter load, the filter will contain, prior to combustion products impact, approximately 1,720 Ci $^{90}Sr$ and 1,720 Ci $^{137}Cs$ (Ref. 9-11).

The load impacting the filter is 0.95 Ci $^{90}Sr$. This load, in addition to the load already on the filter, equals approximately 1721 Ci $^{90}Sr$ and 1,720 Ci $^{137}Cs$.

Filter penetration under these conditions is assumed to be 3%, resulting in a total atmospheric release of $9 \times 10^{-4}$ of the filter burden, which is 1.55 Ci $^{90}Sr$ and 1.55 Ci $^{137}Cs$. Average weekly stack air volume is

$$\frac{37{,}500\ ft^3}{min} \cdot \frac{28{,}320\ mL}{ft^3} \cdot \frac{60\ min}{h} \cdot \frac{24\ h}{day} \cdot \frac{7\ days}{wk} = 1.07 \times 10^{13}\ mL/wk$$

The one-week average concentration of $^{90}Sr$ is therefore:

$$\frac{1.55\ Ci\ ^{90}Sr/wk}{1.07 \times 10^{13}\ mL/wk} \cdot \frac{10^6\ \mu Ci}{Ci} = 1.45 \times 10^{-7}\ \mu Ci/mL\ ^{90}Sr$$

$$\frac{1.55 \text{ Ci } ^{137}\text{Cs/wk}}{1.07 \times 10^{13} \text{ mL/wk}} \cdot \frac{10^6 \ \mu\text{Ci}}{\text{Ci}} = 1.45 \times 10^{-7} \ \mu\text{Ci/mL } ^{137}\text{Cs}$$

These values exceed the Table II guidelines (Ref. 9-1) of $3.0 \times 10^{-11}$ µCi/mL $^{90}$Sr and $2.0 \times 10^{-9}$ µCi/mL $^{137}$Cs, respectively.

9.12.5.2 HEPA Filter Impacted by Flaming Debris. It is postulated that a piece of debris is drawn into the cell, catches fire, and then is transported in the air stream and carried to the HEPA filters. It is also postulated that the filters have accumulated, with time, flammable materials such as dust, lint, condensed organic vapors, and chemical salts. If these materials can be ignited in the filters, even though the filters, themselves, are non-flammable, their glass fiber construction could permit them to be rapidly destroyed. Depending on conditions, part of the radionuclide inventory could be released.

Normally, sensing of 140°F by both heat detectors in a cell will automatically initiate diversion of the canyon exhaust air from the HEPA filter system to the sand filter, shut down the canyon supply system, and initiate operation of a 5 gpm water spray in the exhaust air tunnel to the filter system. However, if the cell heat detection system was rendered inoperable by the accident, it could fail with only a "trouble" alarm in the dispatcher's office.

The fire is extinguished in 5 min (Section 9.12.5.1). During that time, 187,500 ft$^3$ of air has transported the evolved heat through the air tunnel. Assuming that the heat of combustion of the organic mixture is the same as for NPH alone, and according to specific heat information in Reference 12, sufficient heat will be generated to raise the temperature in the air tunnel and the filter assembly to 300°C to 400°C. This temperature is sufficient (60°C required) to activate the 5 gpm tunnel water spray system, as well as automatic diversion of the ventilation air from the filter assembly to the sand filter. This diversion process will take approximately five minutes. It has already been postulated that the cell "light water" foam system will be manually initiated, and that it will extinguish the fire within five minutes. For purposes of this scenario, it will be assumed that the flaming fragment or incandescent particle impacts the HEPA filter, after which the ventilation air diversion to the sand filter is completed.

If the dispatcher were to assume, from filter assembly temperature indications received in his office, that there were a fire in the filter assembly, he could decide to manually activate the 50 gpm air tunnel water spray system. However, there would not necessarily be sufficient time to do so, because the activation switch is located in the 291-BD Building, outside the canyon building at the filter units, and only intermittently occupied.

As indicated in Section 9.12.5.1, filter penetration of 3% can be expected at the temperatures being considered in this scenario. Assuming that the HEPA filter units in the first stage are loaded to 50% of their physical capacity (total capacity = 10 lb), and all of this load is flammable, then the quantity of combustible material present on one filter unit is:

$$\frac{1 \text{ unit}}{} \left| \frac{10 \text{ lb}}{\text{unit}} \right| 0.5 = 5.0 \text{ lb of flammable material}$$

Assuming that this material has the same heat of combustion as NPH, then approximately 7,200 Btu will be released at 85% combustion. The temperature of the exhausting air has already been increased to 300°C to 400°C by 137 lb of burning organic material in the cell fire. An additional 5 lb will increase the exhausting air temperature only about an additional 20°C to 25°C, and will not create significant additional air-temperature effects.

It is postulated that the flammable material on the impacted filter assembly is ignited, and eight (10%) of the filter units of each of the two filter stages are consumed. Because glass fibers melt rather than decompose as flammable materials, an appreciable portion of the particulate matter on the filter will be trapped. It is postulated that 50% of the radionuclide inventory on the destroyed filter units will be released to the second HEPA stage, and that 50% of the material impacting the destroyed units of the second stage is released to the atmosphere.

It is assumed that the same activity is on the filters initially as in Section 9.12.5.1, namely, 1,720 Ci each of $^{90}Sr$ and $^{137}Cs$ on the first stage and no loading on the second stage. The following additional postulations are made:

- Eight filter units of both the first and second stages are breached by fire
- Fifty percent of the loading on the breached units of the first stage is released to the second stage
- Three percent of the loading on the remaining units of the first stage is released to the second stage
- Fifty percent of the fire-generated activity ($^{90}Sr$ only) is released to the second stage.
- Fifty percent of the loading released to the second stage passes through destroyed units, which releases, in turn, 50% of the impacting material to the atmosphere.

- o Fifty percent of the loading released to the second stage passes through the intact units, which, in turn, releases 3% of the impacting material to the atmosphere.

These releases to the second stage are as follows for $^{90}Sr$:

1. $\frac{1{,}720 \text{ Ci} \mid 8 \text{ units} \mid 0.5}{80 \text{ units}} = 86.0 \text{ Ci (breached units)}$

2. $\frac{1{,}720 \text{ Ci} \mid 72 \text{ units} \mid 0.03}{80 \text{ units}} = 46.4 \text{ Ci (unbreached units)}$

3. Fire-generated $^{90}Sr$ activity = 0.95 Ci x 0.5 = 0.47 Ci

4. Total $^{90}Sr$ released to second stage = 86.0 + 46.4 + 0.47 = 132.9 Ci $^{90}Sr$

These releases to the second stage are as follows for $^{137}Cs$:

1. $\frac{1{,}720 \text{ Ci} \mid 8 \text{ units} \mid 0.5}{80 \text{ units}} = 86.0 \text{ Ci (breached units)}$

2. $\frac{1{,}720 \text{ Ci} \mid 72 \text{ units} \mid 0.03}{80 \text{ units}} = 46.4 \text{ Ci (unbreached units)}$

3. Total $^{137}Cs$ released to second stage = 86.0 + 46.4 = 132.4 Ci $^{137}Cs$.

With a release from the second stage, as postulated total atmospheric release is then

$$(132.9 \text{ Ci Sr})(0.5)(0.5) + (132.9 \text{ Ci Sr})(.5)(.03) = 35.2 \text{ Ci } ^{90}Sr$$

$$(132.4 \text{ Ci Cs})(.5)(.5) + (132.4 \text{ Ci Cs})(.5)(.03) = 35.1 \text{ Ci } ^{137}Cs$$

Average weekly stack release is:

$$^{90}Sr: \frac{35.2\ Ci}{1.07 \times 10^{13}\ mL} \cdot \frac{10^6\ \mu Ci}{Ci} = 3.3 \times 10^{-6}\ \mu Ci/mL\ ^{90}Sr$$

$$^{137}Cs: \frac{35.1\ Ci}{1.07 \times 10^{13}\ mL} \cdot \frac{10^6\ \mu Ci}{Ci} = 3.3 \times 10^{-6}\ \mu Ci/mL\ ^{137}Cs$$

These values exceed the Table II guidelines (Ref. 9-1) of $3.0 \times 10^{-11}$ µCi/mL $^{90}Sr$ and $2.0 \times 10^{-9}$ µCi/mL $^{137}Cs$, respectively.

9.12.6 Onsite/Offsite Personnel Effects.

9.12.6.1 HEPA Filters Impacted only by Smoke and Radioactive Particulate Matter. Radioactivity level of the stack release, averaged over one week, is $1.45 \times 10^{-7}$ µCi/mL $^{90}Sr$ and $1.45 \times 10^{-7}$ µCi/mL $^{137}Cs$ (Section 9.12.5.1). these values translate to maximum individual doses (Ref. 9-17) as follows:

| Maximum individual | Time (yr) | Doses in rem | | |
|---|---|---|---|---|
| | | Whole body | Bone | Lung |
| Onsite | 1 | $5.7 \times 10^{-3}$ | $7.0 \times 10^{-2}$ | $1.5 \times 10^{-3}$ |
| | 50 | $5.5 \times 10^{-2}$ | $8.0 \times 10^{-1}$ | $1.6 \times 10^{-3}$ |
| Offsite (Hwy. 240) | 1 | $1.1 \times 10^{-3}$ | $1.4 \times 10^{-2}$ | $3.0 \times 10^{-4}$ |
| | 50 | $1.1 \times 10^{-2}$ | $1.6 \times 10^{-1}$ | $3.1 \times 10^{-4}$ |
| Offsite (Site Boundary) | 1 | $3.1 \times 10^{-3}$ | $1.3 \times 10^{-2}$ | $5.7 \times 10^{-4}$ |
| | 50 | $1.9 \times 10^{-1}$ | $7.7 \times 10^{-1}$ | $6.0 \times 10^{-3}$ |

These dose rates indicate a low hazard classification (Ref. 9-5).

9.12.6.2 HEPA Filters Impacted by Flaming Debris. With total activities released as indicated in Section 9.12.5.2, maximum individual doses are as follows:

| Maximum individual | Time (yr) | Doses in rem | | |
|---|---|---|---|---|
| | | Whole body | Bone | Lung |
| Onsite | 1<br>50 | $1.2 \times 10^{-1}$<br>$1.2 \times 10^{0}$ | $1.5 \times 10^{0}$<br>$1.7 \times 10^{1}$ | $3.4 \times 10^{-2}$<br>$3.5 \times 10^{-2}$ |
| Offsite (Hwy 240) | 1<br>50 | $2.4 \times 10^{-2}$<br>$2.3 \times 10^{-1}$ | $2.9 \times 10^{-1}$<br>$3.4 \times 10^{0}$ | $6.6 \times 10^{-3}$<br>$6.7 \times 10^{-3}$ |
| Offsite (Site Boundary) | 1<br>50 | $6.8 \times 10^{-2}$<br>$4.2 \times 10^{0}$ | $2.9 \times 10^{-1}$<br>$1.7 \times 10^{1}$ | $1.3 \times 10^{-2}$<br>$1.4 \times 10^{-1}$ |

These dose rates indicate a low hazard classification, with acceptable risk (Ref. 9-5).

9.12.7 Secondary Effects

The particular conditions involved in this scenario may produce various possible secondary effects, as follows:

- The second HEPA filter stage may be water or heat damaged, and thereby contribute to deactivation of the entire filter assembly
- Damage to cell equipment will require repair or replacement
- Replacement of the cell cover block may be required
- Crane repair may be necessary
- Unplugging of the cell drain will be necessary
- Material drained to Cell 10 will require reprocessing
- The "light water" foam system will require recharging.

9.12.8 Preventives

- Crane inspection and maintenance requirements
- Crane operator training, certification, and recertification requirements
- Canyon housekeeping requirements
- Fire-resistant HEPA filter requirements (Ref. 9-24)
- Metal screening (fire screen) is installed ahead of each HEPA filter stage.
- Continuous air sampling and exhaust-air monitoring requirements
- Process cells containing organic liquids (Cells 26 through 30) and the cell drain tank (Cell 10) are equipped with dual elevated-temperature detectors and a "light water" fire retardant foam spray system. Activation of one of the two detectors will alert operating personnel and the fire department of a possible fire. Activation of both detectors will do the above, as well as initiate operation of the "light water" foam system to the cell, initiate diversion of the canyon exhaust air to the sand filter, initiate operation of a 5-gpm exhaust-air tunnel spray, and shut down the canyon air-supply system.
- Dual elevated-temperature detectors are installed in the exhaust air duct before and after the HEPA filters, which, when activated, will initiate the same actions as activation of the dual elevated temperature detectors in the organic cells.
- An elevated-temperature fire detection system is provided in other cells to warn personnel of a possible cell fire. Spray systems in these cells can be manually activated.
- Housekeeping requirements via administrative controls ensure that minimal quantities of combustible materials are in the canyon.
- The VVS#2 is provided to dispose of off-gases which could potentially contain ammonia, and otherwise result in disposition of flammable ammonium compounds on the canyon exhaust HEPA filters.

9.12.9 Risk

In this scenario, the particular failures which must occur, and their probabilities, are:

- Dropping of the cell cover block into the cell, thus serving as common cause for rupturing an electrical jumper (ignition source), rupturing a processing vessel (TK-27-3), spillage of the tank contents, and rendering inoperable the cell heat detection system, tank weight factor alarm system, and the cell leak detector alarm system. Probability from Hanford operating experience is $1.0 \times 10^{-2}$/yr

- Leaving combustible debris in the canyon sufficiently near the cell to be drawn in by air flow when the cover block is lifted. Probability is $1 \times 10^{-2}$/yr (Ref. 9-3)

- Non-recognition by personnel of the proximity of the above indicated debris to the cell, and failure to remove same. Probability is $3 \times 10^{-2}$/yr (Ref. 9-3) (One demand per shift for each of three shifts prior to the accident).

The combined probability of the above events occurring simultaneously is $3.0 \times 10^{-6}$/yr, or once every $3.3 \times 10^{5}$ yr.

Based on a first-year dose of $2.9 \times 10^{-1}$ rem for the offsite maximum individual (see Section 9.12.6.2), the risk is $8.7 \times 10^{-7}$ rem/yr. This value indicates an acceptable risk (Ref. 9-5).

9.13 VESSEL COIL FAILURE

Vessel coils or heat transfer tubes are used in both heating and cooling service or for the single purpose of cooling. Because cooling service only is less severe on the integrity of the heat transfer surface, the potential for and severity of failure is less than for those systems used for both heating and cooling. Because of this fact, the effluent systems of these two variations of service are segregated, and effluent disposal is by separate disposal systems. In view of these disposal differences, the two services are analyzed independently.

9.13.1 Coil Failure, Heating and Cooling Service

Coils and tube bundles required in alternate heating and cooling service may fail as a result of thermal shock, corrosion, mechanical vibration, or mechanical damage from the installation, operation, or removal of an agitator. Radionuclides entering a failed heat transfer coil or tube bundle will be discharged with the condensate effluent to the steam condensate (BCS) receiver tank.

Condenser E-23-3 is equipped with a high-level-radiation monitor and the BCS receiver tank is equipped with a lower-level-radiation monitor. These monitors initiate audible alarms in the dispatcher's office when radionuclides are detected, upon which operating personnel are alerted to shut off the BCS tank outlet to the 216-B-55 crib, and to shut down the concentration process.

9.13.1.1 Cause and Source. Condensates primarily from strontium concentrations are collected internally and sampled before their dispositions are determined. Therefore, strontium concentrations will not be considered in this context.

It is postulated that a leak occurs in the tube bundle of E-23-3 concentrator. The following assumptions are made for this scenario:

- The BCS condensate flow rate to the BCS tank is 30 gpm
- A leak of such size occurs in a tube bundle by principle of steam eduction to permit 1 gpm to leak from the concentrator while the concentration is in process
- The leak rate is sufficiently low that it is not suspected, from physical indications, to be occurring and is not detected until end of the run
- 400 gal leaks from the concentrator, at an average radiation level of 6 Ci/gal $^{137}Cs$ and 1.2 Ci/gal $^{90}Sr$, over the course of an 8 h run
- Radionuclides are not detected in the BCS stream.

9.13.1.2 Energy Release. An 8 h flow of BCS at 30 gpm is a total release of 14,400 gal. A volume of 400 gal of concentrator solution at 6 ci/gal $^{137}Cs$ and 1.2 Ci/gal $^{90}Sr$ average concentrations results in

2,400 Ci $^{137}Cs$ total release

480 Ci $^{90}Sr$ total release

These quantities distributed in 14,400 gal of BCS results in a radiation level of BCS to crib 216-B-55 of

0.167 Ci $^{137}Cs$/gal BCS

0.033 Ci $^{90}Sr$/gal BCS

This material flows continuously through the BCS tank to crib 216-B-55. The BCS tank is equipped with an on-line, proportional sampler; the automatically composited sample is collected once per day. During an 8 h operation of the E-23-3 concentrator, the BCS sample for this time period can, therefore, be obtained without being collected.

9.13.1.3 Containment System Effects. The cause of the leak is failure of the containment system. Radiation effects to the containment system, because of the leak, are minimal; only decontamination by flushing will be required. The leaking tube will, of course, require replacement of the tube bundle before the concentrator can be reused.

9.13.1.4 Occupational Personnel Effects. There will be no discernible effects to occupational personnel from containment system considerations, as all relevant solutions are contained in-cell or underground. Even when the effluent reaches the crib (216-B-55), however, close personnel approach does not result in unacceptable doses. The indicated flow rates of leaking solution and BCS condensate will result in a total of 2,400 Ci $^{137}Cs$ and 480 Ci $^{90}Sr$ entering the crib (see 9.13.1.5). Dose rates to occupational personnel from the influent only are calculated to be as follows (Ref. 9-17):

Dose Rates (rem/h) and Total Dose
3 ft Above Ground.

| Soil thickness: | 6 ft | 9 ft |
|---|---|---|
| Dose rate: | $1.9 \times 10^{-10}$ | $1.4 \times 10^{-14}$ |
| Total dose, 8 h: | $1.6 \times 10^{-9}$ | $1.1 \times 10^{-13}$ |

These dose values are essentially zero, because the natural background dose rate is $1.1 \times 10^{-5}$ rem/h.

9.13.1.5 Confinement System Effects. The 216-B-55 crib has a capacity of 75,000 gal/d average capacity (Ref. 9-13), although operational experience indicates that normal daily input can be as low as 25,000 gal/d. The E-23-3 concentrator, generating 30 gpm of BCS, produces crib input at a rate of 43,200 gal/d. This volume is approximately 60% of crib capacity. The crib has 6 to 9 ft of required backfill over the influent line, with a 20 mil polyethylene biological barrier between the influent line and the backfill (see Section 9.13.1.4).

9.13.1.6 Onsite/Offsite Personnel Effects and Environmental Effects. The BCS effluent line at Building 221-BB is approximately 4.5 ft underground. At this location, the line is constructed of 0.322 in. thick, 8 in. dia. carbon steel pipe. Dose (rem) to a person standing or working directly over this line for 8 h is again essentially zero ($3.1 \times 10^{-8}$ R/h), because the natural background dose rate is $1.5 \times 10^{-5}$ R/h. Offsite effects and environmental effects are expected to be negligible (Ref. 9-14).

9.13.1.7 Secondary Effects. The particular conditions involved in this scenario may produce various secondary effects as follows:

- Adversely affected processing equipment will require decontamination
- The affected steam tube bundle will require replacement.

9.13.1.8 Preventives.

- Quality assurance inspection of the equipment is made before use, including hydrostatic testing of the coils or tubes.
- Operability tests are conducted on the concentrators before they are placed into service.
- In-process hydrostatic tests are made by blanking the BCS discharge line during shutdowns.
- Instrumentation is installed to measure liquid level and specific gravity. Unexpected changes in these parameters can be investigated to determine their cause.
- The VVS#2 system helps maintain vacuum on the concentrator, but does not function properly if vacuum is lost.
- A vacuum indicator is installed on the concentrator.
- The E-23-3 condenser and the BCS tanks are equipped with radiation monitors which automatically activate audible alarms in the dispatcher's office.

9.13.1.9 Risk. The particular failures which must occur, and their probabilities are as follows.

- A heat transfer tube acquires a leak during normal operation. Probability is 1.8 $10^{-4}$/yr (Ref. 9-3), based on 6,000 h of operation per year.
- The E-23-3 condenser radiation monitor alarm fails. Probability is 8.8 x $10^{-2}$/yr (Ref. 9-2).
- The BCS tank radiation monitor alarm fails. Probability is 8.8 x $10^{-2}$/yr (Ref. 9-2).

The combined probability of the above events occurring simultaneously as a result of operational failures is 1.4 x $10^{-6}$/yr, or once every 7 x $10^{5}$ yr. With a low dose mentioned earlier, the risk is also low for this accident.

9.13.2 Coil Failure (Cooling Service Only)

Coils required only in cooling service may fail as a result of corrosion, mechanical vibration, or mechanical damage from the installation, operation, or removal of an agitator. High risk cooling water is discharged primarily from tank cooling coils in contact with high-radiation-level solutions. The high-risk cooling water is discharged via subheaders to the 15 in. cooling water effluent header and past a radiation monitor. The effluent then flows through a diversion wier to the 24-in. cooling-water

effluent line, then to the 207-B retention basin. This basin also receives condenser cooling water effluent. These two effluents are considered collectively, upon discharge from 207-B basin, to be combined as one effluent and designated as the combined B Plant Cooling (CBC) stream.

When released from the 207-B basin, after approval by supervision, the CBC enters the 216-B-2-3 ditch, and runs above ground to the Gable Mountain valving station north of the 244-CR vault area. At this point, the CBC flows through an underground pipe, and exits approximately 100 yd outside the 200 East fence, discharging again to an open ditch, 216-B-2, and continues eastward to the 216-B-3 pond.

If radionuclides are discharged in the high-risk cooling water effluent to the 15 in. header, the subheader monitor, indicating on a meter in the dispatcher's office, will initiate an audible/visible alarm in the dispatcher's office, and operations personnel can be alerted to begin procedures to isolate the problem source and/or to shut down activities in cells potentially causing the problem. If the effluent continues farther in the line and the contained radionuclides are detected by the monitor located beneath Building 221-BA, the monitor located there indicates on a meter and a strip chart, and initiates an audible alarm, all located in the dispatcher's office.

The 221-BA monitor, when detecting radionuclides, will send a signal to the diverter station, through which the effluent flows just prior to entering the 24-in.-effluent line, and the effluent stream will automatically be diverted into 216-B-59 emergency retention basin, which can accept approximately 250,000 gal of diverted water. This basin has the capability of recirculating accumulated water for sampling purposes and to pump diverted water back to TK-9-1, Building 221-B, for reprocessing. If the basin were to fill to maximum volume, the excess water will drain to an excavated area at the rear.

9.13.2.1 Cause and Source. It is postulated that a leak occurs in either of the following tank cooling coils in consideration of a cesium or strontium inventory as indicated (Ref. 9-25):

| | | |
|---|---|---|
| Inventory source: | TK-39-3 | TK-39-5 |
| Inventory: | $^{137}Cs$ | $^{90}Sr$ |
| Dose rate conc.: | 40 KCi/gal | 11 KCi/gal |
| Working volume: | 326 gal | 1,634 gal |
| Cooling water flow: | 15 gpm | 15 gpm |
| Total header flow: | 1,800 gpm | 1,800 gpm |

Assumptions are as indicated above and as follows.

- The internal pressure in a cooling coil is reduced (flow is stopped) at a time when a hole exists in the coil.

- The above indicated pressure is reduced for sufficient time to allow 10 gal of the respective solution to enter the coil.
- The failure was not detected by a change in volume (weight factor) of the vessel.
- The coil contamination is discharged to the cooling-water header when flow is restored.
- Minimum leakage into the tank occurs when flow is maintained through the coil, and is not noticed by increase in tank weight.

9.13.2.2 Energy Release.

- TK-39-3--Ten gallons of 40 KCi/gal Cs solution contains an activity of 400 KCi Cs released to the cooling-water header.
- TK-39-5--Ten gallons of 11 KCi/gal Sr solution contains an activity of 110 KCi Sr released to the cooling-water header.

9.13.2.3 Containment Systems Effects. The cause of the leak is failure of the containment system. Radiation effects to the containment system, because of the leak, are minimal; only decontamination will be required by flushing. The leaking coil and tank will, of course, require replacement, because the tank and coil are an integrated unit.

9.13.2.4 Occupational Personnel Effects. There will be no discernible effects to occupational personnel from containment system considerations, as all relevant solutions are contained in-cell or underground until the effluent reaches either the 207-B retention basin or the 216-B-59 emergency retention basin. Once this situation develops, close personnel approach may result in undesirable doses.

The cooling water flow, when intersecting other flows to the main header, will be diluted to the extent of 10 gpm/1,800 gpm, or 0.0056 of its original concentration, and will enlarge to about 1,800 gal. Assuming that all of the original leaked material enters the main header, then the concentration of leaked material is as follows:

| Sr | Cs |
|---|---|
| 61.6 Ci/gal | 224.0 Ci/gal |

It is assumed that the leaked material receives no additional dilution before entering either the 207-B retention basin or the 216-B-59 emergency retention basin. Doses for a 1-min duration, to occupational personnel who

are standing as close as possible to the effluent entry to the 207-B basin are as follows: (207-B = 3 ft open air; 216-B-59 = standing over inlet pipe, 16 in. O.D., 0.25 in. thick):

| Retention basin | Dose (rem) | |
|---|---|---|
| | Sr | Cs |
| 207-B (Ref. 9-11) | 0.3 | 70 |
| 216-B-59 (Ref. 9-30) | 0.10 | 22.7 |

These values, in the event of cesium for either case, exceed Rockwell annual exposure guidelines (Ref. 9-4). There will also be a lapse of approximately 5 min before a cesium "slug" entering the sewer line actually reaches the outlet to 207-B pond, thus permitting the worker sufficient time to remove himself from the location if resulting alarms cause his notification in time. Nevertheless, because the 207-B pond is a potential radiation area, the operator is required to take a monitoring instrument with him, and to monitor the situation continuously. As stated in Section 9.13.2.9, the probability is $5.4 \times 10^{-9}$/yr for this accident, which is incredible.

Assuming that all leaked material entered the 207-B retention basin and became homogeneously dispersed throughout the average 500,000 gal volume, the concentration of the strontium or cesium will be:

| Sr | Cs |
|---|---|
| 0.22 Ci/gal | 0.80 Ci/gal |

Dose commitment for a 1 h duration (Ref. 9-17) to occupational personnel who are standing at the water's edge is:

| Location | Time (yr) | Dose (rem) | | |
|---|---|---|---|---|
| | | Whole body | Bone | Lung |
| 207-B Retention Basin | | | | |
| (Sr) | 1 | 0.3 | 0.5 | 0.3 |
| | 50 | 0.5 | 1.0 | 0.3 |
| (Cs) | 1 | 93.2 | 93.2 | 93.2 |
| | 50 | 93.2 | 93.2 | 93.2 |

The exposures in the case of cesium exceed Rockwell guidelines (Ref. 9-4). However, as mentioned above, the accident is incredible, but the situation is continuously monitored by the operator.

If the contaminated effluent were then directed to the emergency disposal site, the 216-B-63 ditch (see Section 9.13.2.5), resulting in an effluent depth of about 10 ft, dose commitment for a 1 h duration to occupational personnel standing at water's edge of the ditch will be (Ref. 9-17):

| Location | Time (yr) | Dose (rem) | | |
|---|---|---|---|---|
| | | Whole body | Bone | Lung |
| 216-B-63 Ditch | | | | |
| (Sr) | 1 | 0.3 | 0.4 | 0.3 |
| | 50 | 0.4 | 0.9 | 0.3 |
| (Cs) | 1 | 80 | 80 | 80 |
| | 50 | 80 | 80 | 80 |

The dose values for cesium again exceed Rockwell guidelines (Ref. 9-4), but, because the 216-B-63 ditch is also a designated radiation area, monitoring of the activity will allow radiation to be detected upon personnel approach, and appropriate protective measures can be taken. In addition, soil permeability will allow some rate of absorption, and releases to the ditch are normally controlled releases.

Assuming that all leaked material entered the 216-B-59 emergency retention basin and became homogeneously dispersed throughout the maximum 250,000 gal capacity, the concentration of the strontium or cesium will be:

| Sr | Cs |
|---|---|
| 0.44 Ci/gal | 1.6 Ci/gal |

Dose rates (rem/h) and total doses (rem, 8 hr) to occupational personnel who are standing over the centerline of the 216-B-59 basin, which has a 2.5 in. concrete cover, are (Ref. 9-30):

| 216-B-59 Basin | Sr | Cs |
|---|---|---|
| Dose rate (rem/h) | 0.21 | 94.6 |

The one-hour Sr dose does not exceed the Rockwell guidelines for annual dose. The guidelines will be exceeded for Cs in approximately 1.9 minutes (Ref. 9-4). However, as above, the situation is continuously monitored by the operator.

9.13.2.5 Confinement Systems Effects. The 207-B retention basin has a capacity of 565,000 gal in each half. At a total header flow of 1,800 gal/min, 5.23 h is required to fill each of the two basins. It is almost an incredible event, in itself, for no action to be taken in this period of elapsed time, after alarms have annunciated in such an event during normal operations (see Section 9.13.2.9).

Nevertheless, if the 207-B basin were filled with contaminated effluent, the effluent will be released to the normal route for the B Plant chemical sewer effluent, the 216-B-63 ditch. This diversion requires a manual valving operation, specifically authorized only by B Plant supervision. No method is presently available at B Plant to recycle contaminated cooling water from 207-B basin back to B Plant.

Assuming that all leaked material enters the 216-B-63 ditch when the ditch is dry, it will fill the approximately 1600 ft long ditch to a level of about 10 ft deep, barring soil percolation. For occupational personnel effects, see Section 9.13.2.4. The effluent will remain in this ditch until it either evaporates or percolates into the soil. Once flow to the 216-B-63 ditch has ceased, provisions of RHO-MA-139 (Ref. 9-1) will be incorporated to determine whether the ditch requires a plastic covering for environmental protection requirements.

9.13.2.6 Onsite/Offsite Personnel Effects and Environmental Effects. Onsite/offsite persons are not considered to be affected by atmospheric release of contaminated effluent that is contained entirely underground. However, in the case of 207-B retention basin, such an open body of water may be subject to

atmospheric effects which can affect "maximum" individuals. Assuming worst case atmospheric conditions, and releases of $4.6 \times 10^{-4}$ Ci $^{90}Sr$ and $1.7 \times 10^{-3}$ Ci $^{137}Cs$ to the atmosphere (Ref. 9-17), dose commitments to maximum individuals are indicated in Table 9-12 (strontium contamination) and Table 9-13 (cesium contamination).

TABLE 9-12. Maximum Individual Dose Commitments from Strontium Contamination of 207-B Retention Basin.

| Maximum individual | Time (yr) | Doses commitment (rem) | | |
|---|---|---|---|---|
| | | Whole body | Bone | Lung |
| Onsite | 1 | $3.8 \times 10^{-5}$ | $5.8 \times 10^{-4}$ | $1.0 \times 10^{-5}$ |
| | 50 | $4.5 \times 10^{-4}$ | $6.7 \times 10^{-3}$ | $1.0 \times 10^{-5}$ |
| Offsite (Hwy 240) | 1 | $7.3 \times 10^{-7}$ | $1.1 \times 10^{-5}$ | $2.0 \times 10^{-7}$ |
| | 50 | $8.5 \times 10^{-6}$ | $1.3 \times 10^{-4}$ | $2.0 \times 10^{-7}$ |
| Offsite (Site Boundary) | 1 | $1.2 \times 10^{-6}$ | $9.5 \times 10^{-6}$ | $1.2 \times 10^{-7}$ |
| | 50 | $1.5 \times 10^{-4}$ | $6.1 \times 10^{-4}$ | $1.2 \times 10^{-7}$ |

These dose commitments class this scenario as low hazard (Ref. 9-5).

TABLE 9-13. Maximum Individual Dose Commitments from Cesium Contamination of 207-B Retention Basin.

| Maximum individual | Time (yr) | Doses commitment (rem) | | |
|---|---|---|---|---|
| | | Whole body | Bone | Lung |
| Onsite | 1 | $3.7 \times 10^{-5}$ | $3.9 \times 10^{-5}$ | $9.7 \times 10^{-6}$ |
| | 50 | $4.2 \times 10^{-5}$ | $9.7 \times 10^{-5}$ | $1.1 \times 10^{-5}$ |
| Offsite (Hwy 240) | 1 | $7.0 \times 10^{-7}$ | $7.4 \times 10^{-7}$ | $1.8 \times 10^{-7}$ |
| | 50 | $7.9 \times 10^{-7}$ | $8.8 \times 10^{-7}$ | $2.1 \times 10^{-7}$ |
| Offsite (Site Boundary) | 1 | $4.9 \times 10^{-6}$ | $4.9 \times 10^{-6}$ | $1.3 \times 10^{-6}$ |
| | 50 | $2.4 \times 10^{-5}$ | $2.5 \times 10^{-5}$ | $1.8 \times 10^{-5}$ |

These dose commitments allow this scenario to be classed as low hazard (Ref. 9-5).

After the 207-B retention basin has been emptied to the emergency disposal site, 216-B-63 ditch, assuming the factors indicated in Section 9.13.2.5, as well as worst case atmospheric conditions, dose commitments to maximum individuals are postulated to be the same as if released from the 207-B retention basin (Tables 9-12 and 9-13); the scenario will therefore be classified as low hazard (Ref. 9-5).

9.13.2.7 Secondary Effects. The particular conditions involved in this scenario may produce various secondary effects as follows:

- Adversely affected processing equipment will require decontamination
- The affected tank and coil will require replacement, because they are an integral unit
- The 216-B-63 ditch may require decontamination and decommissioning, and a replacement ditch or equivalent facility constructed.
- The 207-B Basin may require decontamination and decommissioning, and a replacement basin constructed.

9.13.2.8 Preventives.

- Quality assurance inspection of the equipment is made before use, including hydrostatic testing of the coils or tubes.
- Operability tests are conducted on the coils before they are placed into service.
- Steam and air services are not connected to coils on tanks requiring cooling service only. Positive pressure of cooling water, in event of coil failure, should produce leakage into the vessel.
- Instrumentation is installed to measure liquid level and specific gravity. Unexpected changes in these parameters can be investigated to determine their cause.
- Instrumentation is installed to detect elevated radioactivity in the cooling water effluent line.
- Equipment is installed to alarm when elevated radioactivity is detected in the cooling water effluent line.
- The 15 in. subheader system is equipped for manual redirection of each noncontaminated subheader flow to the 24 in. effluent line while the subheader handling the contaminated effluent continues into the 15 in. line, and on to the emergency retention basin, 216-B-59.

9.13.2.9 Risk. The particular operational failures which must occur for high-risk cooling water to enter 207-B retention basin, and their probabilities, are:

| | |
|---|---|
| Cooling coil failure (based on 6,000 h of operation/yr) | $1.8 \times 10^{-4}$/yr (Ref. 9-2) |
| Motor-operated valve failure | $3.0 \times 10^{-3}$/demand (Ref. 9-2) |
| Personnel cognitive error, 30 min | $1.0 \times 10^{-2}$/event (Ref. 9-3) |
| TOTAL Probability | $5.4 \times 10^{-9}$/yr |

This combined probability of $5.4 \times 10^{-9}$/yr translates to once every $1.9 \times 10^{8}$ yr, which classifies this accident as incredible (Ref. 9-5).

## 9.14 LOSS OF COOLING WATER

Many of the process solutions encountered in B Plant require continuous cooling to remove heat generated by decay of contained radionuclides. This continuous cooling requirement is satisfied by vessel cooling coils which transfer heat to a cooling water stream. The cooling water flow rates to individual vessels are adjusted manually to maintain desired temperatures of the vessel's contents (Ref. 9-25). The cooling water is supplied to B Plant at approximately 100 psig from the 200 East Area raw water system through two, buried, 10-in. lines branching from the supply header. One line enters the east end and one line enters the west end of B Plant. These two lines join in the building, forming a "loop" between B Plant and the header. The approximate flow rate is 5,000-7,000 gpm.

### 9.14.1 Cause and Source

Loss of cooling water, either to a single vessel, or to all of B Plant, can be caused operationally by a break in the raw/cooling water supply line, depending on where the break occurs. Such a break can be caused either by deterioration/corrosion of the supply line, or human error (e.g., rupturing the line with a backhoe).

It is postulated that such a break occurs in the main supply line from the reservoir and that all raw/cooling water supply is lost. For illustration purposes, two vessels will be considered, one containing a strontium solution and one containing a cesium solution. Specific assumptions are as follows.

- 4,900 gal of strontium solution are located in TK-7-1, containing 19,000 KCi Sr.
- 4,000 gal of cesium solution are located in TK-37-1, containing 10,500 KCi Cs.
- Raw/cooling water is not available for 48 h.

9.14.2 Energy Release

The strontium solution can produce a different activity level of radionuclides released to the atmosphere than the cesium solution, because of:

- Different decay characteristics of the respective radionuclides
- Different ventilation/filtration systems of the respective vessels.

These two energy releases will, therefore, be discussed separately.

9.14.2.1 Strontium Solution. According to References 9-26 and 9-35 and the assumptions indicated previously, TK-7-1 will boil in 18 h, and in 48 h it will have lost approximately 1,300 gal of originally contained solution. The activity of strontium lost from TK-7-1 is approximately 500 Ci Sr.

9.14.2.2 Cesium Solution. According to References 9-26 and 9-35 and the assumptions indicated previously, TK-37-1 will not have reached the boiling point in 48 h, but will have attained a temperature of approximately 92°C without having lost appreciable volume of originally contained solution. The quantity of cesium lost, though small, is $10^{-8}$ Ci Cs.

9.14.3 Containment System Effects

The cause of radionuclide transport is failure of the raw/cooling water supply. The affected vessel vent system and its filters will become further contaminated. The exhausted vaporized materials will be vented out of the cell, but some plating of contaminants will undoubtedly take place on the inside of the vessel, as well as the vessel ventilation system, the air tunnel, and the exhaust filter ductwork/housing. However, this phenomenon is not expected to preclude proper functional operation of these portions of the facility.

9.14.4 Occupational Personnel Effects

As mentioned in Section 9.14.5, there will be essentially 500 Ci of strontium impacting the VVS#1 HEPA filters and essentially $10^{-8}$ Ci of cesium impacting the VVS#2 HEPA filters. These quantities, however, will not result in a significant hazard to personnel. All portions of the facility expected to be subject to de-entrainment from the entrained materials are located in non-accessible or remote-accessible areas only. It is not anticipated that significant occupational personnel effects will result. However, should such effects occur, monitoring instrumentation and/or RPTs will identify the situation, and it will be rectified, if required, by normal approved procedures for handling these effects.

### 9.14.5 Confinement Systems Effects

Released materials will impact both the VVS#1 and VVS#2 filters, as well as the exhaust filtration filters. No significant abnormal affects are expected, other than possible plugging of the VVS#1 and VVS#2 pre-filters. Such an event has occurred several times, and will be handled per normal approved procedures.

The entrained strontium inventory will exhaust through the pre-filter and single HEPA filter of the VVS#1, for which credit is not taken because it cannot be in-place DOP tested, as well as the two HEPA filters of the canyon ventilation system. Two HEPA filters will provide a decontamination factor of $10^6$. The total decontamination factor is then determined to be $1 \times 10^6$ for the strontium contamination. The quantity of strontium impacting the VVS#1 is 500 Ci (Ref. 9-35), resulting in an atmospheric release of $5 \times 10^{-4}$ Ci Sr.

The entrained cesium inventory will exhaust through the pre-filter and four HEPA filters of the VVS#2, before entering the 24 in. sewer. However, credit will not be taken for the two HEPA filters located in-cell because they cannot be in-place DOP tested. Two HEPA filters provide a decontamination factor of $10^6$. The total decontamination factor is then determined to be $1 \times 10^6$ for the cesium contamination. The quantity of cesium impacting the VVS#2 is $10^{-8}$ Ci Cs (Ref. 9-26), resulting in an environmental release of $10^{-14}$ Ci Cs to the 24 in. sewer.

### 9.14.6 Onsite/Offsite Personnel Effects and Environmental Effects

It is postulated that cooling water is simultaneously interrupted to both TK-7-1 and TK-37-1, but that cooling water service is restored in 48 h. During this period $5 \times 10^{-4}$ Ci of strontium and $10^{-14}$ Ci of cesium will have been released to the atmosphere (Ref. 9-35). These quantities of strontium and cesium produce concentrations which are well below the Table II guidelines (Ref. 9-1), allowing this scenario to be classified as low hazard (Ref. 9-5).

### 9.14.7 Secondary Effects

The contaminated vessel vent systems may require decontamination, but these activities will be conducted according to current approved procedures.

### 9.14.8 Preventives

- Two emergency wells supply water to the building raw-water cooling system, powered by manually-started diesel-driven pumps. Emergency cooling water is thereby available at approximately 1,000 gpm and 60 psig.

- The 221-B Building raw water header can be supplied from the sanitary water header by hose bibs and backflow preventers.
- All primary pumping stations are equipped with steam-driven pumps on standby for emergency requirements during power failure.
- Parallel primary supply lines, each capable of emergency requirements, are installed between the river and the 200 East raw water supply system.
- A 3,000,000 gal reservoir in the 200 East Area provides surge and storage capacity.
- Either end of the raw water supply "loop" can handle emergency requirements as long as the single supply line from the powerhouse to the loop is intact.

### 9.14.9 Risk

The particular failures which must occur for this accident, resulting in total loss of raw water, and their probabilities are:

| | |
|---|---|
| The main raw water supply line fails | $2.6 \times 10^{-5}$/yr (Ref. 9-2) |
| Failure of emergency pump power to start | $1.0 \times 10^{-1}$/demand (Ref. 9-2) |
| Cognitive error of 30 min in not using sanitary water source as a substitute | $1.0 \times 10^{-2}$/demand (Ref. 9-2) |
| TOTAL | $2.6 \times 10^{-8}$/yr |

The combined probability of the above operational failures occurring simultaneously is $2.6 \times 10^{-8}$/yr, or once every $3.8 \times 10^{7}$ yr. With the release-concentration values indicated in Section 9.14.6, this scenario presents acceptable risk (Ref. 9-5).

## 9.15 LOSS OF INSTRUMENT OR PROCESS COMPRESSED AIR

Maximum compressed air requirements for B Plant are 1,200 scfm of process air and 300 scfm of instrument air, both at ambient temperatures. The process air is supplied by one compressor having a capacity of 1,240 scfm, with the other redundant compressor requiring manual starting upon failure of the primary compressor. A third, backup compressor with a capacity of about 600 scfm at 100 psig is intertied to start automatically when process air falls below a pre-set value. The instrument air is supplied by one compressor having a capacity of about 300 scfm, and supply is automatically transferred to the process air line upon failure of the instrument air compressor. The compressors are arranged to hold respective discharge header pressures within a 5 psig differential over a wide range of demand, so long as their capacities are not exceeded. Process air is used in the plant for the following process control purposes.

- Provide 1-2 scfm of dilution air per vessel to preclude exceeding the lower explosive limit of hydrogen in air (4%). About 80 scfm is taken from the process air system for this purpose.

- Purging gang valves and supply lines to steam jets to preclude their filling with process solution after their use, as a result of the vacuum caused by condensed steam.

- Backup for the steam supply to the exhaust jets on the vessel vent systems. These systems contain and decontaminate the process off-gases before their discharge to the environment.

- Process air is used to operate the process solution recirculation jets located in the sampling ports of the canyon deck.

Instrument air is used for the following purposes:

- Purging the weight-factor and specific-gravity dip tubes.

- Controlling diaphragm-operated valves

- Operating pneumatic instrumentation, such as pressure indicators, recorders, recorder-controllers, transducers, and transmitters.

9.15.1 Cause and Source

Loss of compressed air supply can be caused by:

- Failure of both total electrical supply and backup diesel-powered compressor

- Mechanical breakdown of all process air compressors

- A break in the main distribution line downstream of the compressed air tanks.

It is postulated that such a loss occurs and results in a suck-back of a process solution in a steam line, thus producing abnormal radiation levels in the operating gallery. Assumptions are:

- One gallon of 12.5 KCi/gal Cs solution is sucked back into the operating gallery environment (cesium feed solutions for WESF are jetted to WESF using "fail-safe" gang valves)

- The solution is contained in 33 in. of 3 in. I.D. pipe extending 33 in. from the floor of the operating gallery.

### 9.15.2 Energy Release

There will be no contamination hazard to personnel, because the cesium solution is contained entirely within the piping system. There is, however, an exposure hazard. One gallon of 12.5 KCi Cs solution is located in 33 in of a 3 in. ID pipe extending 33 in. above the operating gallery floor.

### 9.15.3 Containment System Effects

The cesium solution will contaminate the steam line, thus requiring decontamination of the line by flushing per existing approved procedures.

### 9.15.4 Occupational Personnel Effects

Contamination of the subject steam line by 1 gal of 12.5 KCi Cs solution will produce an exposure hazard. Dose rates to personnel standing at various distances from the pipe are as follows:

| Distance from pipe (ft) | Dose rates | | |
|---|---|---|---|
| | rem/h | R/min | R/s |
| 1 | 32,000 | 540 | 9.00 |
| 2 | 11,000 | 190 | 3.10 |
| 5 | 2,100 | 35 | 0.58 |
| 10 | 550 | 9.1 | 0.15 |
| 20 | 140 | 2.3 | 0.04 |

Most of the indicated values are above Rockwell guidelines (Ref. 9-4). However, these values are the case only after the source pipe has completed filling. In actuality, as the source material is being sucked back, increased radiation will cause the CAMs to alarm, thus providing time for evacuation of personnel from the operating gallery.

In addition, as the solution and pipe cool, essentially all of the solution will drain back to the cell, because of the piping configuration. The only solution remaining will be a thin film on the internal pipe wall. There is no recorded instance in which as much as one gallon of solution has been sucked back in B Plant. Assuming conservatively that 0.1% of the solution remained on the pipe walls, dose rates are 0.001 of the values given in the above table.

### 9.15.5 Confinement System Effects

No confinement system effects are expected, because all hazardous material is contained within the eduction system piping.

### 9.15.6 Onsite/Offsite Personnel Effects and Environmental Effects

No effects of these types are expected, because there is no impact to the confinement system.

### 9.15.7 Secondary Effects

Personnel will be evacuated from adjacent areas and approved emergency procedures will be invoked. Personnel access will be permitted only for those required for operations essential to plant safety. Decontamination efforts will be required for restoring the area to normal radiation levels, such as shielding, flushing, and/or removal of the affected systems. Hydrogen and ammonia purges will be curtailed.

### 9.15.8 Preventives

Loss of process and instrument compressed air is mitigated by the following features:

- The instrument air compressor is fed by the emergency power supply line
- With total loss of all electrical power, the backup diesel-driven compressor automatically starts
- The process air system is equipped with redundant compressors
- The instrument air system automatically ties into the process air system if the instrument air system fails.

The following procedures and design features are established to ensure appropriate safety aspects if a total compressed air loss is experienced:

- All processing operations will be suspended
- All electric motors, located in process cells where hydrogen generation is possible, will be shut down to minimize sparking sources. The motors will not be restarted until after air purging has resumed and continued sufficiently to reduce vessel atmospheric hydrogen below flammable concentration
- All remote maintenance operations in the process cells will be discontinued
- Since the primary ventilation exhaust fan damper settings at 291-8 are controlled by pneumatic instrumentation, arrangements are provided for a fail-safe condition
  - The electric motor-driven exhaust fans are stopped, and their dampers are closed
  - The emergency steam turbine exhaust fan automatically starts.

- All diaphragm-operated critical valves are engineered and installed to realize a fail-safe position.

9.15.9 Risk

Several combinations of operational failures can result in total loss of compressed air. These are:

- Total electrical failure (see Section 9.9)
- Loss of all process air systems
- Break in main process air header.

The probabilities of these combinations are determined and discussed separately.

- Total electrical failure--Such a failure can be produced by a tornado or an earthquake. The probabilities for these, as discussed in Section 9.8, are:

| | |
|---|---|
| Design basis tornado | $6.0 \times 10^{-7}$/yr (Ref. 9-20) |
| 1/2 safe shutdown earthquake | $3.3 \times 10^{-3}$/yr (Ref. 9-10) |

- Loss of all process air compressors--The failures necessary for this scenario, and their probabilities, are:

| | |
|---|---|
| Failure of primary process air compressor system | $2.6 \times 10^{0}$/yr (Ref. 9-2) |
| Failure of secondary process air compressor system | $1.0 \times 10^{-3}$/demand (Ref. 9-2) |
| Failure of backup process air compressor system | $1.0 \times 10^{-1}$/demand (Ref. 9-2) |
| TOTAL | $2.6 \times 10^{-4}$/yr |

The combined probability of this scenario is $2.6 \times 10^{-4}$/yr or once every $3.85 \times 10^{3}$ yr.

- Break in main process air header. The failure necessary for this scenario is simply a broken header pipe. The probability for this failure is $2.6 \times 10^{-4}$/yr (Ref. 9-2) or once every $3.85 \times 10^{3}$ yr.

Of the above combinations of failures, the one with the highest probability is the 1/2 SSE, $3.3 \times 10^{-3}$/yr, which is discussed in Section 9.8. For operational failures, maximum risk is to an individual standing 1 ft from the affected pipe in the operating gallery. This scenario is considered to be low hazard, and risk is determined to be acceptable (Ref. 9-5).

## 9.16 TEMPERATURE EXCURSION

Prior to solvent extraction processing, current acid wastes (CAW) are treated to remove solids and to recover the strontium and rare earths associated with the solids. The treatment process contains three steps during which solids, containing large quantities of radionuclides, are allowed to settle or to be centrifuged and the liquid decanted from the vessel. If proper controls are not maintained, the heat generated from the settled solids can produce local temperatures sufficiently high to vaporize radionuclides such as strontium and ruthenium.

### 9.16.1 Cause and Source

The postulated cause of a temperature excursion is failure of engineering safeguards coupled with improper operation, i.e., permitting centrifuged solids to dry out by failure to promptly continue the processing step.

It is postulated that 2,000 gal of CAW solution has been jetted to TK-11-2, then transferred and centrifuged in G-12-2 centrifuge. Rather than continue processing at this point, the centrifuge cake is allowed to self-heat and the situation is not recognized for 8 h. The CAW solution is assumed to contain, nominally, the following activities of radionuclides (Ref. 9-27):

| Species | Ci/gal | Total Ci (2,000 gal) |
|---|---|---|
| Pu | $3.5 \times 10^{-3}$ | 7.0 |
| Am | $3.9 \times 10^{-2}$ | 78.0 |
| U | $2.2 \times 10^{-7}$ | $4.4 \times 10^{-4}$ |
| Np | $8.85 \times 10^{-5}$ | 0.177 |
| Sr | 44.5 | $8.9 \times 10^{4}$ |
| Cs | 49.5 | $9.9 \times 10^{4}$ |
| TRE* | 100.5 | $2.0 \times 10^{6}$ |
| Ru | 150 | $3.0 \times 10^{5}$ |

*TRE = Total Rare Earths as cerium

After centrifugation, essentially no cesium and only about 3% of the strontium remain with the solids cake, and solids volume will be about one percent of the original solution volume (Ref. 9-24). At this point, the solids are assumed to be characterized as follows:

| Species | Ci/gal | Total Ci (20 gal) |
|---|---|---|
| Pu | 0.35 | 7.0 |
| Am | 3.9 | 78.0 |
| U | $2.2 \times 10^{-5}$ | $4.4 \times 10^{-4}$ |
| Np | $8.85 \times 10^{-3}$ | 0.177 |
| Sr | 133.5 | $2.67 \times 10^{3}$ |
| TRE | $1.0 \times 10^{5}$ | $2.0 \times 10^{6}$ |
| Ru | $1.5 \times 10^{4}$ | $3.0 \times 10^{5}$ |

Without further processing, the self-heating cake can increase at an average of approximately 1° to 2°C/h, and it is assumed that a final temperature of 29°C will be reached after 8 h (Ref. 9-26).

### 9.16.2 Energy Release

According to Reference 9-26, the approximate maximum quantities of the materials expected to be released from the centrifuge in an 8 h period are as follows:

| Species | Ci released to filter |
|---|---|
| $^{139}Pu$ | $2.0 \times 10^{-7}$ |
| $^{241}Am$ | $9.0 \times 10^{-6}$ |
| $^{238}U$ | $8.0 \times 10^{-13}$ |
| $^{237}Np$ | $2.0 \times 10^{-9}$ |
| $^{90}Sr$ | $2.0 \times 10^{-23}$ |
| TRE (as $^{141,144}Ce$) | $1.0 \times 10^{-2}$ |
| $^{103,106}Ru$ (as $RuO_2$) | $1.0 \times 10^{-1}$ |

The $^{141,144}Ce$ is present in the ratio 1.0 $^{141}Ce$/10.0 $^{144}Ce$, and the $^{103,106}Ru$ is present in the ratio 0.13 $^{103}Ru$/0.17 $^{106}Ru$. These ratios are the same ratios as those for PUREX decladding waste.

B Plant operating history indicates that the only times when gaseous ruthenium release (as $RuO_4$) has been a hazard has been during americium separations. The reason is that a possibility existed for inadvertent introduction of an oxidizing chemical (such as a persulfate) to the americium-separation process at a particular place where conditions would cause oxidation of ruthenium and its evolution as gaseous $RuO_4$. These conditions do not exist in the CAW process, so evolution of $RuO_4$ is not a hazard.

### 9.16.3 Containment System Effects

The exhausted vaporized materials will be vented out of the cell, but some plating of contaminants will undoubtedly take place on the inside of the centrifuge, as well as the vessel ventilation system, the air tunnel, and the exhaust filter ductwork/housing. However, this phenomenon is not expected to preclude proper functional operation of these portions of the facility.

### 9.16.4 Occupational Personnel Effects

All portions of the facility expected to be subject to plate-out from the vaporized materials are located in non-accessible or remote-accessible areas only. It is not anticipated that significant occupational personnel effects will result. However, should effects occur, monitoring instrumentation and/or RPTs will identify the situation and it will be rectified, if required, by normal procedures for handling these effects.

### 9.16.5 Confinement System Effects

Released materials will impact the VVS#1 filters and the exhaust filtration filters. No significant abnormal effects are expected, other than possible plugging of the VVS#1 pre-filter. Such an event has occurred several times, and will be handled per normal approved procedures.

The vaporized inventory of centrifuge cake will impact the exhaust filter systems; it will be exhausting through a pre-filter and one HEPA filter of VVS#1, and two HEPA filters of the canyon exhaust filtration system. Two HEPA filters will provide a decontamination factor of $10^6$. (No credit is taken for the VVS#1 HEPA filter, because it cannot be in-place DOP tested.) Operating experience indicates that the pre-filter of the VVS#1 captures, by de-entrainment, essentially all of generated aerosols. It is assumed that this value is actually 99.9%, resulting in a decontamination factor of $1 \times 10^3$. The total decontamination factor is then determined to be $1 \times 10^9$.

### 9.16.6 Onsite/Offsite Personnel Effects and Environmental Effects

At one-half maximum air flow, the canyon ventilation system exhausts at 37,500 cfm, which translates, on a total weekly volume basis to:

$$\frac{37{,}500\ ft^3}{min} \cdot \frac{60\ min}{h} \cdot \frac{168\ h}{wk} \cdot \frac{28{,}316\ mL}{ft^3} = 1.07 \times 10^{13}\ mL/wk$$

According to the quantities of the materials released (Section 9.15.2), and the decontamination factor of $10^9$, the absolute quantities of the materials released to the atmosphere, and their concentration averaged over one week, are as follows:

| Species | Absolute qty. released (Ci) | Weekly conc. (μCi/mL) | Table II value (RHO-MA-139) μCi/mL |
|---|---|---|---|
| $^{239}Pu$ | $2.0 \times 10^{-16}$ | $1.9 \times 10^{-23}$ | $6.0 \times 10^{-14}$ |
| $^{241}Am$ | $9.0 \times 10^{-15}$ | $8.4 \times 10^{-22}$ | $2.0 \times 10^{-13}$ |
| $^{238}U$ | $8.0 \times 10^{-22}$ | $7.5 \times 10^{-29}$ | $5.0 \times 10^{-12}$ |
| $^{237}Np$ | $2.0 \times 10^{-18}$ | $1.9 \times 10^{-25}$ | $1.0 \times 10^{-13}$ |
| $^{90}Sr$ | $2.0 \times 10^{-32}$ | $1.9 \times 10^{-39}$ | $3.0 \times 10^{-11}$ |
| TRE (as $^{141,144}Ce$) | $1.0 \times 10^{-11}$ | $9.3 \times 10^{-19}$ | $2.0 \times 10^{-8}$ ($^{141}Ce$) |
| $^{103,106}Ru$ (as $RuO_2$) | $1.0 \times 10^{-10}$ | $9.3 \times 10^{-18}$ | $2.0 \times 10^{-10}$ ($^{106}Ru$) |

In all cases the absolute quantity released is less than the Table II values. These volumes indicate that this accident is classified as low hazard (Ref. 9-5).

### 9.16.7 Secondary Effects

Significant secondary effects are not expected other than as previously mentioned in Section 9.16.5.

### 9.16.8 Preventives

The following preventives reduce the probability of this accident:

- Administrative procedures require that the centrifuge operation not be started unless it can be completed without delay
- No more than 2,000 gal of CAW slurry is processed through the centrifuge before removal of the precipitate
- Solids in a centrifuge are covered with water at the end of a batch, if not immediately processed further.

### 9.16.9 Risk

Necessary failures for this scenario, and their probabilities, based on 250 centrifugations/yr are as follows:

| | |
|---|---|
| Failure of operator to continue procedure after centrifugation | $2.5 \times 10^{0}$/yr (Ref. 9-3) |
| Failure of supervisor to recognize failure | $2.5 \times 10^{0}$/event (Ref. 9-3) |
| Supervisory non-recognition lasts 8 h | $3.0 \times 10^{-4}$/event (Ref. 9-3) |
| Total Probability | $1.9 \times 10^{-3}$ |

This "accident" occurs several times per year as an abnormal event, but not with consequences of this high a magnitude. The probabilities indicated are based on circumstances required for a release of the indicated magnitude. Total probability of this scenario due to operational failures is, therefore, determined to be $1.9 \times 10^{-3}$/yr, or once every 526 yr. As mentioned in Section 9.16.6, this accident is classed as low hazard (Ref. 9-5), because all release values are less than those of Table II guidelines (Ref. 9-1). With such low values, this scenario demonstrates acceptable risk with operational malfunctions.

## 9.17 CELL DRAIN LINE FAILURE

Process solutions which find their way to the cell floors via leaks, and overflows, flow through 6-in.-diameter vertical drains leading into a 24-in.-I.D. vitrified clay pipe which traverses the length of the canyon below the cells. Leaks from the hot-pipe trench also flow into the cell drain line. This line is embedded in concrete between 3 and 9 ft below the cell floors. The concrete is at least 12 in. thick around the entire pipe; soil surrounds the concrete encasement. The pipe drains with a 1% slope down from each end of the canyon to the deep cell (Cell 10) collection tank. Solution in this tank is periodically jetted to the waste handling system, or, if sufficiently high in radionuclides, is reprocessed for fission product recovery (Ref. 9-13). If the drain line were cracked or broken, the potential exists, under normal operation with time, for high concentrations of radionuclides to accumulate in the soil.

### 9.17.1 Cause and Source

It is postulated that the cell drain line loses integrity by physical deterioration. A basis in fact for this postulation is that the original B Plant facility was built with a 40-yr life expectancy. This time span has already elapsed.

Assuming that 150 gal of $^{90}Sr$ solution becomes released due to an accident, and enters the soil through the breached cell drain line in a matter of hours, decay heat will be generated by this solution. Even if the drain line breach were small, and relatively small quantities of material leaked through, a relatively larger amount of time is required to obtain the same essential results.

### 9.17.2 Energy Release

Depending on the particular source cell, 150 gal of $^{90}Sr$ solution can generate about 28,000 Btu/h of decay heat, based on 8,000 Ci/gal of $^{90}Sr$ (Ref. 9-13). This solution will leak into the soil and is assumed to form an approximately spherical-shaped contaminated zone, with the leak at the top of the sphere, and with the diameter of the sphere approximately 13 ft.

### 9.17.3 Containment System Effects

Determination of the cause of the catastrophic release of $^{90}Sr$ from its containment system will be required. Because repair or replacement of the failed portion of the system will be virtually impossible, decommissioning of the system, or a portion of the system, will be required.

### 9.17.4 Occupational Personnel Effects

Assuming that a "hot spot" has been formed as described in Section 9.17.1, a potential exposure hazard exists. The upper surface of the "hot spot" is assumed to be located 3 ft below the cell floor and such that minimum barriers exist between the hot spot and an individual standing in the canyon. With the top of the sphere 3 ft below a 6-ft-concrete floor and $1.2 \times 10^{6}$ Ci $^{90}Sr$ in a 13-ft-diameter soil sphere, a dose rate of $3.1 \times 10^{-13}$ rem/h at 3 ft above the concrete is given. This value is substantially below natural background levels (Ref. 9-17).

### 9.17.5 Confinement System Effects

Significant effects expected to the confinement system involve replacement or substitution of the entire cell drain line, as well as decommissioning and decontaminating the breached line. Such effects will require major considerations, because of the inaccessible location of the present line.

### 9.17.6 Onsite/Offsite Personnel Effects and Environmental Effects

There will be no effects to onsite/offsite personnel due to atmospheric release, nor can an exposure hazard result to onsite personnel who are near the building. Assuming that a person is standing one foot from the outside wall of the canyon, and directly opposite the "hot spot," his dose rate is significantly below natural background levels (Ref. 9-17). Environmental effects are expected to be nil because of the depth of the water table and the fact that the strontium is trapped in the soil (Ref. 9-17).

### 9.17.7 Secondary Effects

Temperatures in the soil and concrete encasement could approach 1,100°C after two or three weeks (Ref. 9-11). Such a temperature is adequate to cause dehydration of concrete, and thereby result in additional deterioration of the concrete encasement and drain line integrity. Subsequent transfer of solutions could then enlarge the "hot spot," and ultimately endanger the main structure. After a "hot spot" has formed, leaking organic solvent could result in an explosion.

### 9.17.8 Preventives

The following safeguards are provided to minimize the quantity of solution which enters the cell drain system and for ensuring integrity of the cell drain line.

- All new transfer routes are leak checked before transfer of solutions through them is permitted.
- Leak detectors are installed in the cell floor drain openings, and will detect less than one cup of solution entering the drain. Personnel are alerted to the situation by an alarm, so that immediate corrective action can be initiated.
- Integrity of the cell drain line is determined quarterly by a volumetric measurement technique.
- Volume of solution in process vessels is required administratively to be less than 80% of maximum capacity to limit the potential for overflow.
- High level alarms are installed on all tanks.
- Solution transfer volumes are verified both from shipper and from receiver tank volume measurement systems.
- Each time cell cover blocks are removed, a visual inspection of process equipment is made for evidence of leaks. If any are found, they are corrected.

### 9.17.9 Risk

The failures required for this accident scenario, and their probabilities, are as follows:

| | |
|---|---|
| Failure of tank integrity (assumed from operating experience) | $2.0 \times 10^{-1}$/yr |
| Failure of cell drain line (50 yr life expectancy) | $2.0 \times 10^{-2}$/yr |
| Failure of leak detector | $8.8 \times 10^{-2}$/yr (Ref. 9-2) |
| TOTAL | $3.5 \times 10^{-4}$/yr |

The combined probability of these operational failures is $3.5 \times 10^{-4}$/yr, or once every $2.9 \times 10^{3}$ yr. As no onsite/offsite effects are expected, this scenario presents acceptable risk (Ref. 9-5).

## 9.18 NITRIC ACID MISROUTED TO ION EXCHANGE COLUMN

Nitric acid can be accidentally misrouted relatively easily to an ion exchange column containing an organic-base resin. Only the opening of a wrong valve, leading from a tank containing nitric acid to the appropriate scale tank is required.

### 9.18.1 Cause and Source

It is postulated that the wrong valve is opened when preparing to operate an ion exchange column in the cesium recycle process. This action allows 400 gal of 12.2M nitric acid to be introduced to empty scale tank TK-17-2A. The acid is then added to TK-17-2, which contains cesium feed. The resulting solution is then jetted to metering tank TK-18-3 for introduction to the ion exchange column. Assumptions at this point are as follows.

- The cesium-nitric acid solution contains 3 MCi cesium.
- 400 gal of 12.2M nitric acid are mixed with 1,000 gal of cesium solution yielding a solution of the following concentrations:
  - 3.5M nitric acid
  - 2.14 KCi Cs/gal
- Flow rate into the column is 20 gpm.

As the cesium-nitric acid solution is fed to the column, cesium will be adsorbed on the resin. In addition, the nitric acid will begin reacting with the resin, evolving heat and gaseous chemical reaction products. As the temperature increases, contained liquids will boil, causing physical

evolution of additional gaseous products. As the resin is destroyed by both heat and chemical reaction, previously adsorbed cesium will again be dissolved in the resident aqueous solution.

Column effluent normally is directed to TK-18-1, which is vented through VVS#2. In this scenario, however, evolved gases force liquid from the remainder of the column and the effluent transfer line, thus allowing direct introduction of solution-entrained gases to TK-18-1 and the VVS#2. At this point, the following is assumed.

- Each cubic meter of evolved gas suspends a maximum of 1,000 mg of aerosol/mist (Ref. 9-14).
- A single HEPA filter will reduce the exiting concentration of aerosol/mist in the gas to 0.14 mg solution per cubic meter (Ref. 9-15).

The entrained solution in the evolved gases are highly acidic. Even though some of the nitric acid is consumed in chemical reactions with the resin, physical variables (e.g., temperature and pressure) preclude precise determination of acid concentration in the solution. It is assumed that this concentration is 3.0M. The evolved mist/aerosol and gases will impact the VVS#2 system, and then be exhausted to the 24 in. sewer line.

### 9.18.2 Energy Release

The document, ARH-2626 (Ref. 9-28) indicates the following information concerning nitric acid reaction with Duolite ARC-359 resin,* assuming 50 $ft^3$ of resin. In actual processing, approximately 300 $ft^3$ of resin is used, which will further dilute the significance of the following values:

| | Nitric Acid Molarity | | | | |
|---|---|---|---|---|---|
| | 6M | 8M | 10M | 12M | 15.7M |
| Maximum offgas rate, $ft^3$/min | 64 | 165 | 436 | 846 | 985 |
| Maximum temperature, °C | 55 | 91 | 98 | 99 | 99 |

Extrapolation of this information indicates that approximately 15 $ft^3$/min of offgas will be generated per 50 $ft^3$ of resin if 4.0M nitric acid is used, and maximum temperature will be approximately 25°C to 30°C.

*T.M. Diamond Shamrock Chemical Co.

9.18.3 Containment System Effects

Reference 9-28 indicates that the gas-removing capacity of TK-18-1 is completely capable of handling the volume of gas generated in this reaction, and that the maximum temperature attained is only a few degrees above ambient. Containment system effects are thereby expected to be well within normal operating parameters.

9.18.4 Occupational Personnel Effects

No such effects are anticipated beyond normal operating parameters.

9.18.5 Confinement System Effects

No such effects are anticipated beyond normal operating parameters.

9.18.6 Onsite/Offsite Personnel Effects

No such effects are anticipated beyond normal operating parameters.

9.18.7 Secondary Effects

No such effects are anticipated other than a process upset, producing relatively minor problems.

9.18.8 Preventives

Administrative operating procedures are in effect.

9.18.9 Risk

Risk is judged to be no higher than that experienced in normal operations, and is therefore acceptable (Ref. 9-5).

9.19 NITRIC ACID BULK STORAGE TANK COLLAPSE

Nitric acid is strong acid possessing powerful oxidizing and corrosive properties. Its vapor, as well as contained oxides of nitrogen, can cause extreme burns to all body tissue. Nitric acid can also react strongly, sometimes violently, with a variety of organic materials, as well as with some inorganic materials and chemicals.



9312892393

### 9.19.1 Cause and Source

It is postulated that the three nitric acid bulk storage tanks collapse, such as caused by a heavy vehicle impact. This action allows, if all tanks are full and rupture, the spillage of 18,000 gal (202,500 lb) of 57% nitric acid. Assuming the spill creates a shallow puddle averaging 1/2 in. deep, the liquid covers an area of 57,600 $ft^2$ (1.3 acres).

### 9.19.2 Environmental Effects

Nitric acid will attack vigorously any alkaline material which it contacts, such as concrete and local soil. It is assumed that 1/4 of the spillage area (14,400 $ft^2$) consists of asphalt pavement from which only 1,000 gal (11,250 lb) of the acid remains until it is washed off, the remainder having run off to surrounding soil. In addition, if any acid comes in contact with carbon steel, such as pipes or the railroad tracks, $NO_x$ will be generated at a greater rate than for contact with other materials.

If the 18,000 gal seeps into or is washed onto the soil, which is alkaline and contains carbonates, the acid reacts with the soil to release carbon dioxide. If all the acid reaching the soil reacts accordingly, the quantity of carbon dioxide released is calculated to be as follows:

$$\frac{18{,}000\ \text{gal} \;\Big|\; 11.25\ \text{lb} \;\Big|\; 0.57 \;\Big|\; 1\ \text{lb mol} \;\Big|\; 1\ \text{lb mol} \;\Big|\; CO_2}{\phantom{18{,}000\ \text{gal}} \;\Big|\; \text{gal} \;\Big|\; \phantom{0.57} \;\Big|\; 63\ \text{lb} \;\Big|\; 2\ \text{lb mol} \;\Big|\; HNO^3} = 916\ \text{lb mol}\ CO_2$$

$$\frac{916\ \text{lb mol}\ CO_2 \qquad 44\ \text{lb}}{\text{lb mol}} = \sim 40{,}300\ \text{lb}\ CO_2$$

At standard conditions, this quantity of carbon dioxide is calculated to approximate

$$\frac{40{,}300\ \text{lb}\ CO_2 \;\Big|\; 454\ \text{g} \;\Big|\; 1\ \text{mole} \;\Big|\; 22.4\ \text{L} \;\Big|\; 1\ \text{gal} \;\Big|\; 1\ ft^3}{\phantom{40{,}300\ \text{lb}\ CO_2} \;\Big|\; \text{lb} \;\Big|\; 44\ \text{g} \;\Big|\; \text{mol} \;\Big|\; 3.8\ \text{L} \;\Big|\; 7.5\ \text{gal}} = \sim 327{,}000\ ft^3\ \text{carbon dioxide}$$

If this reaction is assumed to be complete in two hours, the average rate of evolution of carbon dioxide is 2,725 $ft^3$/min. The nitrate portion of the nitric acid will remain in the soil, to be diluted by water percolating into and through the soil.

### 9.19.3 Occupational Personnel Effects

Until the nitric acid seeps into and reacts with the soil, nitric acid vapors and nitrogen oxides evolve into the air. In addition this phenomenon will occur with the 1,000 gal remaining on the asphalt paving until it is washed off.

The nitric acid used in B Plant contains as much as 0.05% nitrogen oxides ($NO_x$) (Ref. 9-31), and there will be very little degradation of the acid to produce additional $NO_x$ at ambient conditions. Assuming that half of the $NO_x$ contained in the 17,000 gal and all the $NO_x$ contained in the 1,000 gal is evolved into the atmosphere in two hours, after which the problem is alleviated, then an average rate of evolution is 0.5 lb/min.

The nitric acid, per se, will also vaporize to an extent. According to Ref 9-33, it is not expected that $HNO_3$ or $NO_x$ concentration in the air, if drawn into B Plant by the ventilation system, to be threatening to life or health. On the other hand, it is expected to produce an environment not suitable for working. According to Ref. 9-5, this accident is considered to be classified as low hazard.

In addition, the possibility exists that the spilling acid can splash someone. It is conceivable that the acid could even flow into the basement shop area if the tank fell appropriately and the spillage flooded in that direction.

### 9.19.4 Onsite/Offsite Personnel Effects

The following indicated concentrations of nitric acid ($HNO_3$) and Nitrogen Dioxide ($NO_2$) are guidelines used in this analysis (Ref. 9-33, unless noted otherwise).

| Substance | TWA[1] (ppm) | STEL[2] (ppm) | IDLH[3] (ppm) |
|---|---|---|---|
| $HNO_3$ | 2 | 4 | 100 |
| $NO_2$ | 3 | 5 | 50 (Ref. 9-34) |
| $CO_2$ | 5,000 | 15,000 | 50,000 (Ref. 9-34) |

[1]Time-weighted average, continuous exposure.

[2]Short term exposure limit, 15 min exposure.

[3]Immediately dangerous to life and health.



9312899239395

9.19.4.1 Onsite Personnel Effects. Reference 9-33 indicates a $HNO_3$ concentration in air of 24 ppm at the onsite, nonoccupational location of Building 2704-E. Although this concentration is not one in which a person would be advised to work, it is not immediately life-threatening. This concentration of $HNO_3$ is present in the air for approximately one hour at this location, and would probably be noticed by people, because of its irritating properties to the eyes and mucous membranes.

The $NO_x$ released by this accident over a period of two hours is at a concentration of approximately 5 ppm (Ref 9-33), which is the STEL. Because this limit is 15 min, personnel are not advised to remain at their work stations in 2704-E, but the situation is not immediately life-threatening.

The $HNO_3$ spilled in this accident will react with carbonates in the soil. The following conditions are assumed (Ref 9-33):

Soil porosity = 25%
Contained calcium carbonate ($CaCO_3$) = 2.0 wt %
Soil density = 1.65

Under these conditions $CO_2$ will be released for approximately 30 min, with an air concentration at 2704-E of 1400 ppm. This concentration is only 0.3 of the TWA for $CO_2$.

Maximum concentrations expected onsite are indicated as follows:

| | |
|---|---|
| Nitric Acid | 11 ppm |
| Carbon Dioxide | 910 ppm |
| $NO_x$ | 3 ppm |

Because the air concentrations of any of the above substances is not immediately dangerous to the life or health of workers in the occupied building nearest to B Plant, this aspect of the accident is determined to be low hazard with acceptable risk.

9.19.4.2 Offsite Personnel Effects. Of offsite persons subjected to the effects of this accident, those located on Highway 240 experience greater effects than those located at the site boundary. Reference 9-33 indicates a $HNO_3$ concentration in air of approximately 0.5 ppm at the Highway 240 location closest to B Plant. This concentration is well below the TWA for $HNO_3$.

The $NO_x$ released by this accident over a period of two hours is at an air concentration of approximately 0.1 ppm at the Highway 240 location. This concentration, as well, is below the TWA for $HNO_3$.

The $CO_2$ released as a result of the $HNO_3$ reaction with the soil produces an air concentration at the Highway 240 location of approximately 26 ppm. This concentration, too, is well below the TWA value.

Maximum concentrations expected offsite are indicated as follows:

| | Nitric Acid (ppm) | Carbon Dioxide (ppm) | $NO_x$ (ppm) |
|---|---|---|---|
| Offsite (Hwy. 240) | 0.21 | 17 | 0.06 |
| Offsite (Site Boundary) | 0.13 | 11 | 0.03 |

Because all of the values indicated above are well below the TWA values for the respective materials, this part of the accident is determined to be low hazard with acceptable risk.

### 9.19.5 Secondary Effects

This accident will require the affected area to be washed down for immediate acid concentration dilution. In addition, structures potentially affected by dilute acid concentrations will require neutralization measures to be taken.

### 9.19.6 Preventives

Administrative procedures are in effect to mitigate effects of normal wear and tear, and to allow for appropriate shutdown of processing and evacuation of personnel.

### 9.19.7 Risk

It is postulated that the tank supporting structure is comprised by impact from the nitric acid truck. For this to be accomplished, it is assumed to be from a human error on the part of the truck driver after he has finished filling the tank. It is also assumed that he remains in the tank area 30 min before leaving. Probability is determined to be as follows:

| | |
|---|---|
| Driver human error (typical) | $1.0 \times 10^{-2}$/yr |
| Amount of year in area after filling tank | $1.0 \times 10^{-3}$/yr |
| Total Probability | $1.0 \times 10^{-5}$/yr |

With the indicated probability, this accident is determined to be low hazard with acceptable risk (Ref. 9-5).

## 9.20 ANHYDROUS AMMONIA BULK STORAGE TANK COLLAPSE

Anhydrous ammonia is a liquified gas which is always stored under pressure. While any liquid ammonia is present, the tank pressure will approximate 110 psig. In addition, anhydrous ammonia is an extremely reactive chemical, especially with acidic substances.

### 9.20.1 Cause and Source

It is postulated that the anhydrous ammonia bulk storage tank supports collapse, such as caused by impact by a heavy vehicle. This action causes, if the tank is full and the multiple relief valve is knocked off, the forcible release of approximately 40,000 lb of anhydrous ammonia as a mist/vapor. The liquid ammonia in the tank is normally under an internal pressure of approximately 110 psig. The ammonia will be released through the resulting 2-in.-dia. orifice at an initial rate of 8,700 lb/min, and will continue for 4.6 min (Ref. 9-33).

### 9.20.2 Environmental Effects

Anhydrous ammonia has a very high vapor pressure as a liquid and, unless stored under pressure and kept very cold, will vaporize extremely rapidly. Storage pressure, self-generated by the ammonia in the tank, is typically 110 psig. As it discharges from the 2-in. orifice, created when the multiple relief valve is knocked off, a plume of ammonia will be created in the atmosphere.

### 9.20.3 Occupational Personnel Effects

If the released ammonia travels toward B Plant, and is drawn into the ventilation system, a life-threatening situation can develop. Under worst case conditions, sufficient oxygen in the air can be displaced by the ammonia, so that there is insufficient oxygen to support normal respiration. At best, such a quantity of released ammonia will produce concentrations in air which far exceed the IDLH value of 500 ppm (Ref. 9-33).

### 9.20.4 Onsite/Offsite Personnel Effects

Elevated ammonia concentrations in air can be experienced by personnel both onsite and offsite. These concentrations can exceed TLV and IDLH levels.

9.20.4.1 Onsite Personnel Effects. The closest building to B Plant housing non-occupational workers is 2704-E. Ammonia concentrations can be expected at this location from this accident of 130,000 ppm (13%) in air (Ref. 9-33) if the plume does not rise. This value greatly exceeds the IDLH value of 500 ppm. It is conceivable that personnel in any building in the 200-E Area can experience elevated ammonia levels. However, because ammonia

is lighter than air, it is possible that the plume will rise sufficiently that IDLH values are not attained for most of the 2750-E area. It is expected, however, that attained concentrations will be uncomfortable, if not unbearable, to the sensory organs at many locations in the 200 East Area. According to Reference 9-5, this aspect of the seismic event is assessed a moderate hazard classification when considered in conjunction with the probability of occurrence (Sec. 9.20.7).

9.20.4.2 Offsite Personnel Effects. References 9-33 indicates that the closest offsite location can experience ammonia concentrations in air of approximately 2,500 ppm if the ammonia plume is at ground level. However, it is also indicated that, since ammonia is lighter than air, plume rise has the effect of reducing ammonia concentration at ground level by a factor of 3 to 100. With such a reduction, then offsite concentrations can approximate 25 to 800 ppm. This situation is worst case, and actual ground level concentrations of ammonia will be less than the IDLH value of 500 ppm with a reduction factor of 20. It is, therefore, determined that this aspect of the accident indicates moderate hazard (Ref. 9-5).

### 9.20.5 Secondary Effects

In addition to toxic effects produced by this accident, the entire 200-E work force might require immediate evacuation to avoid such effects. Of course, the ammonia storage facility will require replacement.

### 9.20.6 Preventives

The ammonia storage tank is filled by tank truck, thus requiring an access road. However, the road is only a spur, thereby not used except for service vehicles. There is no through traffic. In addition, access is blocked by a barrier chain, which must be physically removed when access is required.

### 9.20.7 Risk

For the tank supporting structure to be compromised, it is postulated that such is accomplished by being impacted by the ammonia tank truck. For this to be accomplished, it is assumed to be from a human error on the part of the truck driver after he has finished filling the tank. It is also assumed that he remains in the tank area for 30 min before leaving. Probability is determined as follows:

| | |
|---|---|
| Driver human error (typical) | $1.0 \times 10^{-2}$/yr |
| Amount of year in area after filling tank | $1.0 \times 10^{-3}$ |
| Total Probability | $1.0 \times 10^{-5}$/yr |

The indicated probability of this accident from this cause of $1.0 \times 10^{-5}$/yr equals once every $10^5$ yr, and it is classed as a moderate hazard with acceptable risk (Ref. 9-5).

## 9.21 CARBON DIOXIDE BULK STORAGE TANK COLLAPSE

Carbon dioxide is a liquified gas which is always stored under pressure. While any liquid carbon dioxide is present, the tank pressure will approximate 300 psig.

### 9.21.1 Cause and Source

It is postulated that the liquid carbon dioxide bulk storage tank is severely disturbed, such as caused by impact by a heavy vehicle. This action causes, if the tank is full and is broken free from a 1 1/2 in. connecting line, the forcible release of approximately 12,000 lbs of carbon dioxide as a mist/vapor. The carbon dioxide will be released through the resulting 1 1/2 in. dia. orifice at an initial rate of 11,365 lb/min and will continue for approximately one minute (Ref. 9-33).

### 9.21.2 Environmental Effects

Liquid carbon dioxide has a very high vapor pressure and, unless stored under pressure and kept very cold, will vaporize extremely rapidly. Storage pressure, self-generated by the carbon dioxide in the tank, is typically 300 psig. As it discharges from the 1 1/2 in. orifice, created when it breaks loose from a 1 1/2 in. line, a plume of carbon dioxide will be created in the atmosphere.

### 9.21.3 Occupational Personnel Effects

As indicated in Section 9.19.4, guidelines used in this analysis for $CO_2$ concentrations are:

| TWA (ppm) | STEL (ppm) | IDLH (ppm) |
|---|---|---|
| 5,000 | 15,000 | 50,000 |

If the released carbon dioxide travels into the B Plant ventilation system, a life-threatening situation can develop. Such a quantity of released carbon dioxide will produce concentrations in air which far exceed the IDLH value of 50,000 ppm (Ref. 9-33, 9-34). However, as indicated in Section 9.21.7, the probability of such an accident is $1 \times 10^{-5}$/yr.

9.21.4 Onsite/Offsite Personnel Effects

Elevated carbon dioxide concentrations in air can be experienced by personnel both onsite and offsite.

9.21.4.1 Onsite Personnel Effects. Non-occupational workers in 2704-E can expect to experience carbon dioxide levels of 68,000 ppm, which exceeds by 36% the IDLH value for carbon dioxide. Reference 9-5 indicates a moderate hazard classification for this part of the scenario when considered in conjunction with the probability of occurrence (Sec. 9.21.7). Most of the people in the 200-E area, however, are not likely to exceed the IDLH value, because of rate of diffusion of carbon dioxide, and the fact that the IDLH value is relatively high.

9.21.4.2 Offsite Personnel Effects. The nearest offsite location (Highway 240) receives the highest concentration of carbon dioxide expected offsite, 1,300 ppm, which is well within the TWA value of 5,000 ppm (Ref. 9-33). This aspect of the accident is thereby classified as low hazard (Ref. 9-5).

9.21.5 Secondary Effects

All personnel within approximately 1,000 ft of the accident will require immediate evacuation to avoid the high $CO_2$ concentrations in the air. In addition, the $CO_2$ bulk storage facility will require replacement.

9.21.6 Preventives

The $CO_2$ storage tank is filled by tank truck, thus requiring an access road. As in the case with the ammonia tank, the access road is a spur, thereby not used except for service vehicles; there is no through traffic. However, there is no barrier chain at its entrance.

9.21.7 Risk

For the tank to be compromised, it is postulated that such is accomplished by being impacted by the $CO_2$ tank truck as resulting from a human error on the part of the truck driver after he has finished filling the tank. It is also assumed that he remains in the tank area 30 min after filling the tank before leaving. Probability is determined to be the same as for the ammonia tank accident, and on the same basis, namely $1.0 \times 10^{-5}$/yr, which is the same as once very $10^5$ yr. This accident is determined to be of acceptable risk (Ref. 9-5).

9.22 through 9.29 (Reserved)

## 9.30 REFERENCES


9-1. RHO-MA-139, July 1983, Environmental Protection Manual, Rockwell Hanford Operation, Richland, Washington.

9-2. WASH-1400, October 1975, Reactor Safety Study: An Assessmment of Accident Risks in U.S. Commercial Nuclear Plants, "Appendix III. Failure Data," U.S. Nuclear Regulatory Commission, Washington, D.C.

9-3. EGG-EA-5887, June 1982, Generic Data Base for Data and Models Chapter of the National Reliability Evaluation Program (NREP) Guide, EGEG, Idaho Falls, Idaho.

9-4. RHO-MA-220, Rev. 1, February 1983, Radiological Standard and Operational Controls, Radiological Engineering, Rockwell Hanford Operations, Richland, Washington.

9-5. RHO-HS-MA-1 Rev. 1, January 1984, Safety Analysis and Report Preparations Guide, G. M. Christiansen and R. Jacobs, Rockwell Hanford Operations, Richland, Washington.

9-6. SAJ/EPRI NP-1128, July 1979, Status Report MEPRI Fuel Cycle Accident Risk Assessment, "HEPA Filters," Appendix A, Science Applications, Inc., Palo Alto, California.

9-7. Letter 65620-CDP-83-070, December 13, 1983, "Seismic Analysis and Evaluations, 221-B Canyon Structure," F. R. Vollert to R. G. Sewell, Rockwell Hanford Operations, Richland, Washington.

9-8. Letter 65431-81-121, October 27, 1981, "B Plant Natural Forces Hazards Survey," F. R. Vollert to T. J. Higgins, Rockwell Hanford Operations, Richland, Washington.

9-9. SD-WM-TA-002, September 30, 1983, B Plant Support Facilities Natural Forces Evaluation, W. W. Chen, et al., Rockwell Hanford Operations, Richland, Washington.

9-10. Letter 65620-CDP-84-119, May 10, 1984, "Earthquake Occurance Probabilities," F. R. Vollert to R. G. Sewell, Rockwell Hanford Operations, Richland, Washington.

9-11. ARH-139, November 15, 1967, Hazards Evaluation, Waste Fractionation - B Plant, R. B. Bixler, et al., Rockwell Hanford Operations, Richland, Washington.

9-12. Internal Letter, May 23, 1984, "Power Outage History of 221-B Building for B Plant Safety Analysis Report (SAR)," R. T. Cochran to R. G. Sewell, Rockwell Hanford Operations, Richland, Washington.

9-13. ERDA-1538, December 1975, Final Environmental Statement, Waste Management Operations, Hanford Reservation, U.S. Energy Research and Development Administration, Washington, D.C.

9-14. ORNL 3441, April 1964, Theoretical Possibilities and consequences of Major Accidents in $^{233}U$ and $^{239}U$ Fuel Fabrication and radioisotope Processing Plants, C. E. Guthrie and J. P. Nichols, Oak Ridge National Laboratory, Oak Ridge, Tennessee.

9-15. ARH-1986, December 1, 1971, Safety Analysis Report, Waste Encapsulation and Storage Facilities, D. E. Braden, et al., Atlantic Richfield Hanford Company, Richland, Washington.

9-16. SD-WM-SAR-005, June 23, 1984, Review Comment Record, Rockwell Hanford Operations, Richland, Washington.

9-17. Letter 72322-84-WU-342, August 9, 1984, B Plant SAR Accident Consequences, Rockwell Hanford Operations, Richland, Washington.

9-18. Handbook of Chemistry and Physics, 52nd Edition, 1971, R. C. Weast, The Chemical Rubber Co., Cleveland, Ohio.

9-19. "Effects of Water Vapor Content on the Inflammable Limits of Ammonia-Oxygen-Nitrogen Mixtures," The Canadian Journal of Chemical Engineering, October 1962, W. F. DeCoursey, et al.

9-20. "Limits for the Progagation of Flame at Various Temperatures in Mixtures of Ammonia with Air and Oxygen," J. American Chemical Society, 121, pp. 1688-1695, 1922, A. G. White.

9-21. "Combustion Properties of Ammonia, Chemical Engineering Progress, vol. 58, No. 2, February 1962, W. L. Buckley and H. W. Husa.

9-22. Letter 65295-84-049, February 22, 1984, Impact of Smoke on K-3 Filter, H. A. Lee to R. G. Sewell, Rockwell Hanford Operations, Richland, Washington.

9-23. "High Efficiency Air Filters," Standards for Safety, June 1964, Underwriters Laboratory, Inc.

9-24. HPS-151-M, Rev. 2, May 27, 1976, Standard Specifications for High Efficiency Particulate air Filters, Vitro Engineering Company, Richland, Washington.

9-25. PFD-B-600-00001, February 1982, Cooling Water Flowsheet for B Plant and Encapsulation, R. P. Weissenfels, Rockwell Hanford Operations, Richland, Washington.

9-26. Letter 65610-84-154, "Heat Transfer Analysis of TK-7-1, TK-37-1, and Centrifuge 12-1 of B Plant," D. C. riley to R. G. Sewell, Rockwell Hanford Operations, Richland, Washington.

9-27. SD-WM-PCP-001, June 1983, Current Acid Waste (CAW) Processing B Plant Head End Draft Flowsheet, Steven M. Joyce, Rockwell Hanford Operations, Richland, Washington.

9-28. ARH-2626, October 12, 1972, Nitric Acid Destruction of Duolite ARC-359, A Study Flowsheet, H. L. Brandt, Atlantic Richfield Hanford Company, Richland, Washington.

9-29. RHO-HS-SR-83-2 4Q GAS P, February 27, 1984, Radioactivity in Gaseous Waste Discharged from the Separations Facilities During 1983, R. C. Aldrich, Rockwell Hanford Operations, Richland, Washington.

9-30. Letter 72310-85-WG-057 and design analysis BP-RE-LNS-019-85, February 27, 1985, "Recalculation of Exposure Rates Associated with Accident Releases of the 216-B-59 Emergency Retention Basin," L. N. Sulton to R. G. Sewell, Rockwell Hanford Operations, Richland, Washington.

9-31. Letter 65920-84-010, January 16, 1984, "Nitric Acid," R. B. Wolf to W. B. Barton, Rockwell Hanford Operations, Richland, Washington.

9-32. NUREG/CR-2651 (PNL-4154), May 1982, Accident Generated Particulate Materials and Their Characteristics - A Review of Background Information, S. L. Sutter, Pacific Northwest Laboratories, Richland, Washington.

9-33. Letter 72310-85-WG-117 and design analysis B-RE-PDR-31-85, April 8, 1985, "Hazardous Chemical Releases for B Plant SAR," P. D. Rittman to R. G. Sewell, Rockwell Hanford Operations, Richland, Washington.

9-34. NIOSH/OSHA Pocket Guide to Chemical Hazards, September 1978, U.S. Department of Labor, Health, and Human Services, Washington, D.C.

9-35. Letter 65610-85-035, March 18, 1985, "Nuclide Releases from Tanks TK-7-1, TK-37-1 of B Plant by Entrainment," D. C. Riley to R. G. Sewell, Rockwell Hanford Operations, Richland, Washington.

9-36. RHO-MA-111, October 28, 1983, Emergency Plan, E. L. Richards, Rockwell Hanford Operations, Richland, Washington.

9-37. ARH-3020, July 1984, Guide to Fire Protection in Cover, Canyons, and Hot Cells, H. A. Lee, Atlantic Richfield Hanford Company, Richland, Washington.

9-38 Letter 72310-85-WG-130, April 15, 1985, "Calculations for the Seismic Scenario of the B Plant SAR", P. D. Rittmann to R. G. Sewell, Rockwell Hanford Operations, Richland, Washington.

9-39 RHO-MA-100, December 1983, Policies Manual, D. J. Cockeram and P. Z. Lorenzini, Rockwell Hanford Operations, Richland, Washington.

9 3 1 2 8 9 9 2 4 0 5

# 10.0 CONDUCT OF OPERATIONS

## 10.1 ROCKWELL POLICY

Rockwell Hanford Operations (Rockwell) activities are conducted in such a manner as to protect the safety and health of all employees and the public, and to prevent loss or damage to plant facilities or the surrounding environment. Operations are conducted in compliance with applicable health and safety requirements of the U.S. Department of Energy (DOE), and adhere to generally recognized and accepted high standards for environmental protection, and for performance of nuclear, radiological, industrial, and fire safety (Ref. 10-1, 10-2). The implementation of these safety requirements is effected by a plant-wide commitment to safety, staffing by qualified individuals, on-going training programs, conduct of operations according to competently reviewed procedures, maintenance of necessary logs, and adequate emergency planning.

## 10.2 B PLANT ORGANIZATION

The manager of Fission Products Processing is accountable for the effective integration of all functions required to assure safety, quality, schedule, effectiveness, and economy of B Plant operations.

The five shift managers are responsible for the shift-to-shift operation (Fig. 10-1).

## 10.3 PERSONNEL SAFETY RESPONSIBILITIES

### 10.3.1 Key Individuals

RHO-MA-258 (Ref. 10-3) directs that responsibilities will be established for individual positions. The safety responsibilities for B Plant management personnel are as indicated below.

10.3.1.1 Manager, Fission Products Processing. Safety responsibilities are:

- Promote safe operation of B Plant
- Administer Rockwell policies. Enforce safety, housekeeping, and general plant rules
- Implement the training of B Plant operations personnel

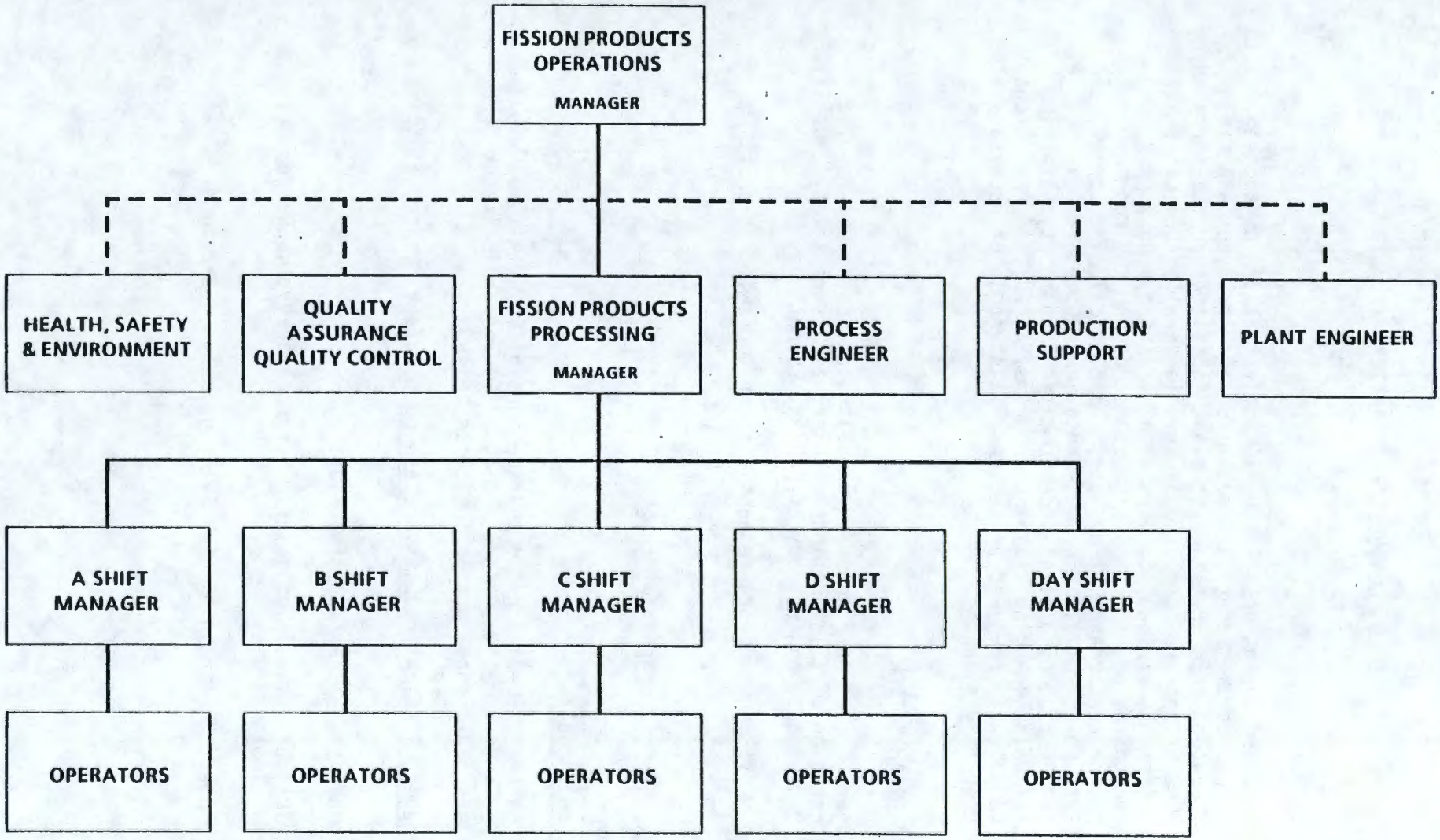


FIGURE 10-1. Organizational Chart - Fission Products Operations.

- Conduct operations according to established procedures
- Meet quality assurance requirements.

10.3.1.2 Shift/Shift Support Manager. Safety responsibilities of the Shift/Shift Support Manager are as follows.

- Supervise, coordinate and direct the activities of personnel on his shift for the safe operation of production and production support activities in B Plant.
- Maintain control over processing operations in accordance with established procedures and specifications.
- Recognize non-standard conditions and take appropriate action.
- Administer company policy as it relates to his crew.
- Train or arrange training for members of his crew.
- Maintain essential records.
- Assume charge in B Plant during emergencies until he is properly relieved by the following Shift Manager, by the Group Manager, or by the Emergency Director.
- Monitor potential situations where large quantities of radioactive materials could be accidentally discharged into the environs and take action as required.

10.3.2 Operations Personnel

10.3.2.1 Operator Trainee. An operator is designated as such between hire-in date and 6 mo service, and must demonstrate, at the end of that time, fundamental knowledge of:

- General radiochemical operations
- Specific plant operation
- Emergency procedures and abnormal plant conditions.

10.3.2.2 Nuclear Operator. An operator is designated as such between 6 and 54 mo of service, and must demonstrate annually increased overall knowledge of the same areas as in 10.3.2.1.

10.3.2.2 Nuclear Process Operator. An operator is designated as such after 54 mo of service and after satisfying all requirements for a Nuclear Operator, and must demonstrate every two years comprehensive knowledge of the same areas as in 10.3.2.1.

10.3.2.4 Lead Worker. An operator is designated as such, at the discretion of management, for such assignment as management deems appropriate.

10.3.3 Support Functions

Those functions providing requisite support for B Plant are as follows.

- Safety and Quality Assurance Function provides environmental protection, radiation monitoring, radiological engineering, industrial hygiene and safety support, analytical laboratory services, quality specifications and standards information, and audit functions.
- Process Engineering provides engineering support for operation of the processes, in addition to overall technical expertise.
- Plant Engineering provides design services for engineering requirements.
- Production Support provides craft personnel to maintain the plant and spare equipment in a safe operating condition.

## 10.4 OPERATIONS PLANNING AND EXECUTION

Operations planning meetings are scheduled routinely. Safety aspects are included in the discussion of:

- Production Plans
- Pre-job safety planning
- Maintenance planning.

Pre-job planning, in accordance with Accident Prevention Standard #2, also precedes every non-routine operation to ensure that all involved personnel are fully aware of any unusual safety or process considerations. Pre-job planning will address the unusual circumstances, as well as the methods to be used for minimizing the risk to personnel, property, or plant equipment.

Operations logs and crane logs are maintained continuously to ensure availability of new and changed items and information to all operations personnel. Various records of information and data are also completed for all aspects of the processes in which this knowledge is necessary for safety, legal, or historical purposes. These aspects include:

- Off-normal events
- Unusual occurrences



9 3 1 2 8 9 9 2 4 0 9

- Radiation occurrences
- Internal surveillance procedures
- Lock and tag book
- Data books and sheets
- Radiation Survey reports
- Routine radiological surveys
- Routine process data
- Air samples.

## 10.5 TRAINING PROGRAMS

### 10.5.1 Initial Training

All new Rockwell employees attend a new employee orientation which includes subjects related to employee safety. New employees' on-the-job training is augmented by scheduled formal classroom sessions, which are taught by qualified personnel and deal with specific aspects of B Plant operation. Inexperienced employees are assigned to work with experienced employees who are knowledgeable in a particular aspect of B Plant operations for on-the-job training on a one-to-one basis. An examination is given at each major step of progression, and certification is required for each of these steps in each functional operations area. The program provides training and examinations on:

- Process emergency
- Facility emergency
- General
- Building services
- Ventilation system (HVAC)
- Sampling
- Packaging and handling Low-Level Waste
- Aqueous Make-up Unit (AMU)
- Equipment testing

- Special processes
- Solid waste cycle
- Strontium cycle
- Cesium cycle
- Capsule handling
- Storage basins
- Manipulators
- Crane and hoist operations
- Services
- Auxiliary operations
- Emergency procedures and abnormal plant conditions
- General radiochemical operation
- Specific plant operations
- Specific job and task activities.

The operator trainer is required to be certified as a trainer. This certification is conducted by the Employee and Organizational Development Group. A grade of 70% is required to pass the written examination. All incorrect answers are reviewed and discussed with the operator trainer as a matter of course.

### 10.5.2 Retraining and Reexamination

These activities are conducted as indicated in Section 10.3.2 in the areas of emergency procedures, abnormal plant conditions, general radiochemical operations, specific plant operations, and job recertifications.

## 10.6 OPERATIONS PROCEDURES

Responsibility is assigned and authority is delegated to each member of the General Manager's staff of Rockwell for issuance of formalized procedural manuals covering their respective assigned activities for implementing policy, functional programs, and management directives affecting the manner in which contractual activities are performed. These procedures are written for B Plant by the Fission Products Processing Manager and approved by Fission Products Operations Manager.

In addition to the general procedures applicable to all Rockwell Plants and workers, there are operating procedures that are specific to B Plant. These procedures are of several types:

- Job Performance Aids (JPA)
- Standard Operating Procedures (SOP)
- Process Operating Procedures (POP)
- Operability Test Procedures (OTP)
- Process Test Procedures (PTP)
- Multifunction Operating Procedures (MOP).

Operations procedures are developed by the functional operation responsible for the activity described in the procedure, and are approved by any or all, depending on the particular applicability of the procedure, of the Process Engineering, Process Design, Production Processing, Program Engineering, and Quality Engineering and Control Departments, as well as the Safety and Quality Assurance Function.

## 10.7 REFERENCES

10-1. DOE Order 5480.1A, August 13, 1981, Environmental Protection, Safety, and Health Protection Program for DOE Operations, U.S. Department of Energy, Washington, D. C.

10-2. DOE-RL Order 5480.1, May 21, 1982, Environmental Protection, Safety, and Health Protection Programs for Richland Operations, U.S. Department of Energy, Richland, Washington.

10-3. RHO-MA-258, Management Compensation Guide, Compensation and Benefits Department, Rockwell Hanford Operations, Richland, Washington.

This Page Intentionally Left Blank.

9 3 1 2 8 9 9 2 4 1 3

# 11.0 OPERATIONAL SAFETY REQUIREMENTS (OSR)

## 11.1 INTRODUCTION

The Operational Safety Requirements (OSR) in this chapter define acceptable conditions, safe boundaries, and management controls required to assure safe operation of B Plant during the processing of radiochemical wastes. Operations outside of the specified boundaries and conditions could result in an unacceptable level of risk to the public and site workers; facility integrity could also be compromised. These OSRs are divided into the following sections:(1)

- Title
- Applicability
- Objective
- Requirements
- Bases
- Recovery
- Audit Point.

These sections are defined and explained below.

## 11.2 DEFINITIONS

### 11.2.1 Title

This is the title of the individual OSR being defined.

### 11.2.2 Applicability

Applicability applies to that portion of the process/activity/facility addressed in the particular OSR.

### 11.2.3 Objective

The objective is the reason for the OSR and the specific condition(s) it is designed to prevent or promote.

11.2.4 Requirements

The requirements are concerned with actual safety limits, control settings, inventory maxima, temperatures, inspections, test frequencies, etc., being controlled. This section provides the safety limits for control settings, limiting conditions for operations, surveillance requirements, design features, and administrative controls which must be in place and observed to assure safe conduct of the activity. According to DOE-RL Order 5480.1,[2] the OSRs are binding upon operations of the facility.

11.2.4.1 Safety Limits and Limiting Control Settings. The Safety Limits refer to those values of measurable safety-related variables outside of which serious consequences may occur. Violation of a Safety Limit constitutes violation of an OSR. The Limiting Control Settings are established within Safety Limits to allow for activation of alarms and for subsequent corrective action before the Safety Limit is reached.

Exceeding a Limiting Control Setting is not an OSR violation, but failure to respond to the agreed-upon recovery plan for a Limiting Control Setting violation is an OSR violation. Violations of Safety Limits or Limiting Control Settings shall be dealt with according to any specific recovery steps provided with the requirement as well as the provisions of Section 11.2.6.1 or 11.2.6.2.

11.2.4.2 Limiting Conditions for Operations. The specifications in this section define the minimum acceptable operating conditions and practices consistent with the required assurance of safety of the environs, public, and operating personnel.

The Limiting Conditions for Operation are, in general, action restrictions or requirements as opposed to specific limits, and an infraction could constitute a breach of a safety barrier or, if repeated frequently, could lead to a serious hazard. An infraction of a Limiting Condition for Operations, therefore, requires immediate investigative and corrective action, and notification of appropriate Rockwell management.

11.2.4.3 Surveillance Requirements. The specifications in this section define the minimum requirements for testing of backup or emergency equipment and the minimum frequencies of calibration of instruments and equipment necessary for verification of operation within the boundaries of the Safety Limits and Limiting Control Settings. Upon determination that these requirements are not met, the recovery steps provided in Section 11.2.6.3 shall be followed.

11.2.4.4 Design Features. The design features addressed in this section are limited to those equipment characteristics specifically required by safety considerations. Violations of these requirements shall be dealt with according to Section 11.2.6.4.



9 3 1 2 8 9 9 2 4 1 5

### 11.2.5 Bases

This section is a discussion of the bases from which the objective and specification are derived. They refer to the accident analysis, Chapter 9.0, and may include reference to equipment, inventory, physical conditions, personnel qualifications, DOE Orders, or Rockwell Policy.

### 11.2.6 Recovery

The recovery constitutes steps taken to return to normal operation if OSRs are violated; it defines the time allowed for recovery and the required notification or approval sequence. Violation of a requirement is normally detected at the time of occurrence of an accident because the specific control features provide early warning. Violation of a requirement can, however, be detected after the violation during routine process control review or periodic inspection or audit. Actions to be taken in response to OSR violations are delineated in the following general recovery steps.

11.2.6.1 Violation of a Safety Limit. When a violation of a Safety Limit is detected, the following action shall be taken:

- Immediate action shall be taken to initiate a prompt and orderly shutdown of that portion of the operation involved. This may require a shutdown of the entire facility. If the violation or responsible action is addressed in an emergency procedure, that procedure shall be followed

- Notification of the Rockwell management and DOE-RL shall be made in accordance with Rockwell procedures

- Circumstances of the violation shall be investigated, the cause shall be established, and appropriate corrective action shall be determined. A report shall be prepared by the Rockwell investigation team for review and approval by Rockwell management

- Facility startup shall be permitted only after the following action items have been completed satisfactorily, as determined by the appropriate review committees, and approved by Rockwell management with concurrence of DOE-RL Waste Management Division

  - Action to return facility, system, or process to a safe condition

  - Action or controls have been established to reduce the probability of a recurrence.

11.2.6.2 Violation of a Limiting Control Setting or Limiting Condition for Operation. When a violation of a Limiting Control Setting or Limiting Condition for Operations requirement is detected, the following action shall be taken:

- Immediate action shall be in accordance with the recovery statement provided with the requirement. Additional actions taken shall be in compliance with a recovery plan approved by Rockwell management. Continued operation without implementation of the above recovery actions is considered an OSR violation and shall be treated as a Safety Limit violation (Ref. Section 11.2.6.1)

- Notification of Operations, Research and Engineering, and Safety and Quality Assurance shall be made as soon as possible

- The incident shall be investigated and reported by Rockwell management or specified delegate. If the incident involved shutdown of a portion of the operations, restart shall require approval of Rockwell management.

11.2.6.3 Violation of a Surveillance Requirement. Upon determination that a Surveillance requirement has not been met, management shall take immediate corrective action to resolve the failure to perform the surveillance requirements. Investigation and recovery of both surveillance and design feature requirements shall be in accordance with Rockwell Nonconformance Reporting System. Continued operation without implementing this recovery action is considered an OSR violation and shall be treated as a Safety Limit violation (see Section 11.2.6.1).

11.2.6.4 Violation of Design Feature Requirement. Upon determination that a design feature has not been provided or implemented, management shall take immediate corrective action to resolve the failure to provide or implement the design feature. Continued operation without implementing this recovery action is considered an OSR violation and shall be treated as a Safety Limit violation (see Section 11.2.6.1).

### 11.2.7 Audit Point

The physical records (e.g., log sheets) used to demonstrate compliance with OSRs are identified, and the responsible organization that maintains the records is also specified. The retention period shall be according to Rockwell requirements.

## 11.3 REVISIONS

Revisions to the OSR document to correct discrepancies, reflect process flowsheet or equipment changes, etc., shall be initiated by B Plant Process Engineering. This group will also apprise the Safety Analysis Group of the revision. Review and approval of revisions to the OSR shall be at the same organizational level as these OSRs.



9 3 1 2 8 9 9 2 4 1 7

## 11.4 INDIVIDUAL OSRs

### 11.4.1 Radiolytic Hydrogen Concentration

11.4.1.1 Applicability. The primary source of hydrogen generation is by radiolysis of aqueous solution or compounds containing hydrogen within tanks in the canyon cells. Dilution of hydrogen by purge air in tanks and operation of the off-gas system, as well as continuous operation of the exhaust system maintains hydrogen concentration levels below flammability and explosive limits. This OSR is applicable to hydrogen concentration in process vessels, as controlled by dilution-air-flow rate.

11.4.1.2 Objective. The objective is to reduce the possibility of hydrogen concentration in tanks to a level not to exceed the flammability and explosive concentration limit, and thus lessen the probability of a hydrogen explosion incident within process vessels.

11.4.1.3 Requirements.

11.4.1.3.1 Safety Limits.

- Hydrogen concentration in vessel atmospheres shall not exceed 4.0% by volume during normal operation of the hydrogen-dilution system. Hydrogen generation rates are calculated using solution compositions and volumes (from B Plant operating specifications and procedures), and the appropriate dilution flow rates are then established.

11.4.1.3.2 Limiting Control Settings (LCS).

- Hydrogen concentration in vessel atmosphere shall not exceed 3.0 vol%. Hydrogen generation rates are calculated using solution compositions and volumes (from B Plant operating specifications and procedures), and the appropriate dilution flow rates are then established.

11.4.1.3.3 Limiting Condition for Operation (LCO).

- Dilution flow rates shall provide a minimum flow necessary to maintain hydrogen concentration below the safety limit.

- In the event of failure of the dilution system alarm(s), physical surveillance of relevant flow meters on the dilution system shall be conducted hourly until the alarm(s) is (are) functional.

11.4.1.3.4 Design. An alarm system, with indicating failure mode, shall be installed to respond audibly and visually at the flow rates which represent Safety Limit and LCS values for hydrogen concentration in vessels where hydrogen evolution could exceed these limits between routine surveillances. Rockwell Management will specify the surveillance frequency and the vessels which require alarm systems.

11.4.1.3.5 Surveillance. Hydrogen-dilution instrumentation calibration and functional checks shall be according to approved procedures.

11.4.1.4 Basis. Evolution of hydrogen by radiolysis occurs in all aqueous solutions containing radioactive isotopes. The lower flammability limits of hydrogen in air saturated with water vapor at room temperature and atmospheric pressure are 4.1, 6 and 9 vol% for vertical, horizontal, and downward propagation respectively, of the flame front. For the basis of this OSR, the lower flammability limit is conservatively assumed to be 4%.

11.4.1.5 Recovery. If a safety limit is violated, required actions are as outlined in Section 11.2.6.1.

Recovery from LCS violations is as follows:

- If any hydrogen concentration rises above its LCS, management shall be notified immediately for determination of appropriate corrective action. All processing with affected vessels shall be shut down, and remain so, until the problem has been corrected

- Additional actions required shall be as indicated in Section 11.2.6.2.

Recovery from LCO violations is as follows:

- If the hydrogen dilution system cannot be operated normally, or fails to operate normally, all electrical equipment in the associated system and cell(s) shall be deactivated and processing shall be terminated, except as deemed essential by management. Processing which has been terminated shall not be restarted until the hydrogen-dilution system has been made properly operational, and affected vessels have been purged to a calculated 3.0 vol%

- Additional actions required shall be as indicated in Section 11.2.6.2

If a surveillance requirement is determined to be violated, actions shall be taken as specified in Section 11.2.6.3

If a design requirement is determined to be violated, actions shall be taken as specified in Section 11.2.6.4.

11.4.1.6 Audit Points.

- Dilution-air-flow meter readings are recorded on Shift Data Sheets which are kept by Operations.

- Instrument calibration records are kept by Production Control.

11.4.2 Ammonia Concentration

11.4.2.1 Applicability. This OSR applies to ammonia accumulation in vessels.

11.4.2.2 Objective. The objective is to prevent the occurrence of an ammonia fire and/or explosion in the vessels and the Off-Gas System.

11.4.2.3 Requirements.

11.4.2.3.1 Safety Limits.

- The vapor phase composition of ammonia in any vessel shall be less than 15 vol% or greater than 28 vol% at temperatures of 40°C to 49°C.

11.4.2.3.2 Limiting Control Settings.

- The temperature of tanks containing or which could potentially contain ammonia shall be maintained at less than 39°C.
- The temperature of concentrators containing or which could contain ammonia shall be maintained above 52°C during operation.
- The vapor phase composition of ammonia in any vessel shall be less than 13 vol% or greater than 30 vol%.

11.4.2.3.3 Limiting Conditions for Operations.

- The temperature of tanks containing or potentially containing ammonia shall be maintained below 35°C as indicated by the temperature measuring and indicating system.
- Concentrators shall be started on water before ammonia-bearing feed is introduced such that the temperature when ammonia is introduced is above 55°C, as indicated by the temperature measuring and indicating system.
- Concentrators shall be operated for a sufficient time to concentrate two concentrator volumes, as measured by the process condensate generation rate.
- Instrumentation shall alarm at the LCS values.

11.4.2.3.4 Design. The alarm systems, with indicating failure mode, shall respond audibly and visually at the LCS and LCO values for temperature on those vessels involved in ammonia processing.

11.4.2.3.5 Surveillance. Temperature instrumentation calibration and functional checks shall be according to approved procedures.

11.4.2.4 Basis. Ammonia is flammable in the range of about 15% to 30% ammonia in dry air. Water vapor effectively decreases the range of flammability, so that at about 44°C, the vapor pressure of water over an aqueous solution is sufficient to render all ammonia and air mixtures nonflammable. At a temperature of 44°C, the moisture content of saturated air is 10 vol%.

The critical ranges for flammable or explosive mixtures is 15 to 28 vol% ammonia in air and temperature between 40 and 49°C. The vapor phase above 3M $(NH_4)_2CO_3$ - 2M $NH_4OH$ eluent (the most concentrated ammonia-bearing steam at B Plant) is flammable when the temperature of the solution is between 39 and 49°C, based on empirically determined partial pressures of $CO_2$, $NH_3$, and $H_2O$ and flammability data of air - $NH_3$ - $N_2$ - $H_2O$.

Air dilution is maintained in all process vessels for hydrogen gas control. This purge of the vapor space above ammonia-bearing solutions provides additional assurances that the flammability region of ammonia-air-water mixtures will not be reached, because the air purge stream contains significant amounts of water vapor which renders ammonia and air mixtures nonflammable. Air dilution is not used to control ammonia vapor levels, per se, because of the equilibrium existing with ammonia between the dissolved vs. vaporized states.

Flammable and explosive mixtures require a significant ignition source as well. Some potential ignition sources are located in the process cells (electrical sources from pumps, agitators, etc.), but the proximity to the vapor space of the tanks and the ignition mechanism is not direct.

11.4.2.5 Recovery. If a safety limit is violated, required actions are as outlined in Section 11.2.6.1.

Recovery from LCS/LCO violations is as follows:

- If the temperature in any tanks which contain or potentially contain ammonia exceed the LCS/LCO value, all processing shall be safely and immediately terminated. Cooling coil flow shall be maximized to lower the temperature. All electrical systems will be deactivated in the relevant process cells. Water may be added to the relevant tank.

- For concentrator operations involving ammonia, feed introduction to the concentrator shall be terminated if the LCS/LCO temperature limit is violated. Water shall be introduced and concentrated until two concentrator volumes have been processed as measured by process condensate generation.

- In the event of temperature alarm failure, surveillance of the relevant vessel temperatures shall be conducted on a frequency determined by management. If the temperature measuring and indicating system fails, all relevant processing will be shut down until temperatures monitoring capability is restored.

- Additional actions required shall be as indicated in section 11.2.6.2.

11.4.2.6 Audit Point.

- Vessel storage shift data sheets are kept by Operations.
- Concentrator operation data sheets are maintained by Operations.
- Instrument calibration records are kept by Production Control.

11.4.3 Flammable Organic Solvents

11.4.3.1 Applicability. This OSR applies to all areas in which processing involves Normal Paraffin Hydrocarbon (NPH), Di (2-ethylhexyl) Phosphoric Acid (D2EHPA), and/or Tributyl Phosphate (TBP), or other separate phase organic liquids.

11.4.3.2 Objective. The objective is to prevent the occurrence of an organic fire and/or explosion in a process vessel or cell. This includes prevention of "red oil" (nitrated TBP) formation, which can be explosive under certain conditions.

11.4.3.3 Requirements.

11.4.3.3.1 Safety Limit.

- The temperature in all vessels shall not exceed 90% of the flash point of the organic liquid contained in the vessel. This does not apply to solvent extraction product concentrators.

11.4.3.3.2 Limiting Control Setting.

- The temperature in all vessels shall not exceed 70% of the flash point of the organic liquid. This does not apply to solvent extraction product concentrators.
- For solvent extraction product concentrators that are operated above 90% of the flash point of the organic liquids that could be introduced into the system, the following LCSs apply:
  - The maximum solution temperature of any solution which has contacted an organic phase shall be 140°C, as measured by in-cell thermohms or by control of the steam supply pressure to less than 39 psig
  - The solvent extraction product concentrator shall be operated at or below 39 psig tube bundle pressure, which are controlled by preset pressure reducing valves.

11.4.3.3.3 Limiting Conditions for Operation.

- The temperature or pressure measurement and alarm systems shall be operating properly.
- For solvent extraction product concentrators the following LCOs apply:
  - Organic shall be separated (as by decanting) from any influent liquid process stream
  - Steam stripping shall be initiated prior to addition of process streams to solvent extraction product concentrators.

11.4.3.3.4 Design. An alarm system, with indicating failure mode, shall respond audibly and visually to safety limit and LCS temperatures and pressures.

- Interlocks shall be provided to shut off the steam to solvent extraction product concentrators upon high steam pressure or high temperature readings.

11.4.3.3.5 Surveillance. Flammable organic liquid temperature instrumentation and solvent extraction steam pressure system calibration and functional checks shall be according to approved procedures.

11.4.3.4 Basis. Organic liquids exposed to temperatures at or above the solution flash point can form flammable vapor mixtures. Process solvent consists of materials with predictable vapor pressure/temperature relationships. The safety boundary organic concentration in vapors and/or aerosols in dry air (46 mg/L) is the established lower flammability limit for hydrocarbons of chain length $C_8$ or greater. This limit therefore applies to normal paraffin hydrocarbon (NPH). The similar limit for pure tributyl phosphate (TBP) is 88 mg/L and is not reached until the temperature in an unagitated vessel reaches 146°C.

The 46 mg/L concentration due to the vapor pressure contribution of NPH is reached at a minimum temperature of 80°C. Calculations based on conservative assumptions for available vapor space, agitator aerosol generation rates, and aerosol settling rates are made to determine the maximum aerosol contribution towards the vapor phase organic concentration. A temperature limiting control setting based on the worst case is then selected to assure that 70% of the 46 mg/L value is not exceeded in any tank.

Red Oil

Vigorous exothermic reactions can occur between nitric acid or heavy metal nitrates and some TBP diluent mixtures under conditions that might arise during the concentration of waste and product solutions. Violent reactions resulting in equipment damage were experienced during early

developmental work and were verified in laboratory studies. More recent laboratory work in which various diluents were studied has extended the knowledge of the nature of solvent nitration reactions. While the exact reactions have not been determined, certain characteristics have been observed and the conditions under which these can be expected to occur have been defined as follows.

- The explosions or rapid reactions have involved the evolution of oxides of nitrogen, and the two incidents occurred only after concentration had proceeded to the point of incipient calcination of the uranyl nitrate (greater than 135°C).

- In each incident, solvent was present in the concentrated product and a dense, second organic phase was present in the concentrator "bottoms" liquid. This second organic phase commonly called "red oil," is the intermediate product of the nitration reactions and is a complex mixture of degraded organic and organic nitrate compounds.

- In the laboratory studies, the temperature at which the reactions were initiated (as evidenced by the evolution of oxides of nitrogen) varied, depending on the nature of the diluent and whether heavy-metal nitrates were present. With a naphthenic-type diluent, such as was used during the first 10 yr PUREX operated, rapid reactions have occurred at temperatures of 135°C in the presence of heavy-metal nitrates and 150°C in the absence of heavy-metal nitrates. In more recent laboratory studies[11-14] with straight-chain-saturated or NPH-type diluents, such as the NPH diluent used during the last 7 yr of plant operation, no vigorous, exothermic reactions were encountered at temperatures up to 150°C in the presence of heavy-metal nitrates. These later studies did not investigate the solvent nitration reaction in the absence of heavy-metal nitrates. However, it is reasonable to assume that the relationship reported earlier (i.e., higher initiation temperature in the absence of heavy-metal nitrates) would be equally valid with normal paraffin-type diluents.

The control features are designed to preclude violent solvent-nitrate reactions by preventing solvent from entering the concentrators and maintaining an always-safe temperature. Decanting or steam stripping prevents solvent entry and the interlocks assure a safe temperature.

11.4.3.5 Recovery. If a safety limit is violated, required actions are as outlined in Section 11.2.6.1.

Recovery from LCS violations is as follows:

- Associated processing shall be shut down, and remain so, until the problem has been corrected

- Additional actions required shall be as indicated in Section 11.2.6.2

If a design requirment is determined to be violated, actions shall be taken as specified in Section 11.2.6.4.

If a surveillance requirement is determined to be violated, actions shall be taken as specified in Section 11.2.6.3.

11.4.3.6 Audit Point.

- Temperature readings are recorded on Shift Data Sheets. These records are kept by Operations.

- Instrument Calibration records are kept by Production Control.

11.4.4 Confinement Systems

The ventilation system, in association with the physical containment of the radioactive solutions, comprises the confinement systems. The two essential features of the ventilation systems are pressure differentials and HEPA filtration. The essential features of radioactive solution containment are volume, temperature and pressure of the storage vessels.

11.4.4.1 Applicability. This OSR applies to all HEPA filters used in B Plant, as well as essential pressure differentials necessary for sufficient air flow in the appropriate direction.

11.4.4.2 Objective. The objective is to maintain confinement of radioactive material within B Plant. This is done by maintaining a system of pressure differentials, which thereby direct building air flow from areas of least potential contamination to areas of greatest potential contamination. The air is then directed through HEPA filters for radionuclide removal before exhausting to the atmosphere. In addition, monitoring of radioactive solution storage vessels is done to minimize contamination migration to the ventilation systems.

11.4.4.3 Requirements.

11.4.4.3.1 Safety Limits.

- The canyon-to-atmosphere differential pressure shall not increase above -0.02 in. w.g. during normal operations.

- Air impacting a HEPA filter shall not exceed 300°F.

11.4.4.3.2 Limiting Control Settings.

- The canyon-to-atmosphere differential pressure shall not sustain above -0.04 in. w.g. during normal operations.

- Air impacting a HEPA filter shall not exceed 250°F.

11.4.4.3.3 Limiting Conditions for Operation.

- Methods shall be available to measure the temperature, pressure, and the volume of the storage vessels.

11.4.4.3.4 Surveillance. Readings of HEPA filters DPs; air sampling, radiation detectors; and storage vessel volumes, temperatures and pressures; as well as calibration and functional checks of related instrumentation, shall be according to approved procedures.

11.4.4.3.5 Design.

- The canyon air supply shall automatically shut down to maintain canyon-to-atmosphere differential pressure at or greater than the Safety Limit.

- Canyon-to-atmosphere differential pressure deviations from LCO alarms and safety limits shall result automatically in audible and visible alarms.

- Canyon-to-atmosphere differential pressure indicators shall indicate failure mode both audibly and visibly.

- A stack sampling and monitoring system shall be installed to indicate continuously the radiation level of air exhausting from B Plant, and to provide air samples as necessary or required. The monitor shall alarm both audibly and visibly when radiation levels exceed a predetermined value.

- A temperature, pressure and volume measuring and indicating system shall be installed for all storage vessels.

11.4.4.4 Basis. Excessive contamination is controlled by directing internal air flow toward areas of increasingly greater contamination potential. Before exhaust to the atmosphere, HEPA filters provide the final barrier of containment of airborne radionuclides. Maintaining storage vessels within the described heat, volume, and pressure limits minimizes migration of radionuclides to the ventilation systems.

11.4.4.5 Recovery. If a safety limit is violated, required actions are as outlined in Section 11.2.6.1.

Recovery from LCS violations is as follows:

- If any ventilation system LCS value is exceeded, management shall be notified immediately for determination of appropriate action. If recovery cannot be accomplished in 8 h, all processing shall be shut down, and remain so until the problem has been corrected.

- Additional actions required shall be as indicated in Section 11.2.6.2.

Recovery from LCO violations is as follows:

- If any relevant temperature, pressure or volume measurement and indicating system fails to operate normally, all relevant operations shall be shut down, until and unless management has determined that safe operations can continue based on calculated volumes and temperatures (i.e., transfer volumes, cooling coil (jacket duties)).

If a surveillance requirement is determined to be violated, actions shall be taken as specified in Section 11.2.6.3.

If a design requirement is determined to be violated, actions shall be taken as specified in Section 11.2.6.4.

11.4.4.6 Audit Point. The control differential pressure indicators are located through the facility, and their readings are recorded on a shift data sheet. These records are kept by Operations.

- Vessel-surveillance readings are recorded on shift data sheets. These records are kept by Operations.

- Instrument Calibration records are kept by Production Control.

11.4.5 Fire Protection System

11.4.5.1 Applicability. This OSR applies to all areas of B Plant processing and hazardous chemicals handling.

11.4.5.2 Objective. The objective for the fire protection system is to maintain an "improved risk" level of fire protection, to achieve the least possible probability and/or consequence, consistent with cost/risk factors, of fire-caused impacts.

11.4.5.3 Requirements.

11.4.5.3.1 Limiting Conditions for Operation. Fire protection equipment indicated in Section 11.4.5.3.2 shall be operable.

11.4.5.3.2 Design.

- Dual heat detectors shall be installed in cells which contain organic liquids, in the air tunnel entrance, and in the exhaust duct before the high efficiency particulate air (HEPA) filters. Heat detectors shall respond to a temperature of 160°F. Activation of one detector shall audibly and visually alert operating and fire department personnel. Activation of both detectors shall do the above, as well as automatically initiate operation of the fire suppression system.



9 3 1 2 0 8 9 9 2 4 2 7

- Single heat detectors shall be installed in all other cells and shall respond to a temperature of 225° ± 10°F. Activation of the detector shall audibly and visibly alert operating and fire department personnel.

- A foam spray system shall be installed in cells which contain organic liquids.

- A water spray system shall be installed in all other cells.

- An effective water spray system shall be installed in the canyon exhaust air tunnel. The system shall be manually initiated, or automatically initiated in response to signals from the heat detectors at the air tunnel entrance or in the exhaust duct before the HEPA filters.

- All fire protection systems shall audibly and visually respond to system failure.

11.4.5.3.3 Surveillance. Frequency of fire protection system inspections and calibrations shall be in accordance with DOE-RL requirements to verify that the system is operational.

11.4.5.4 Recovery. Upon impairment of the fire protection system, B Plant management shall inform Industrial Hygiene and Safety and the fire department, indicating planned corrective measures. The situation shall be analyzed to determine the necessary precautions and possible interim alternative protection. When a system is taken out-of-service for a period longer than 8 h, a caution tag shall be attached noting the reason, system affected, the time and the name of the authorizing individual.

11.4.5.5 Basis. Fire suppression systems are required for the safe operation of the facility. The unavailability of direct access to many potential fire locations in B Plant necessitate use of the described systems.

11.4.5.6 Audit Point. Inspection of the B Plant fire protection systems and administrative controls are conducted periodically by fire protection engineers and the Hanford Fire Department. The results of the inspection are formally documented and kept in the offices of both the Fire Protection Engineer and Operations Manager.

## 11.5 REFERENCES

11-1 DOE Order 5480.1A, Chapter V, "Safety of Nuclear Facilities," August 13, 1981, U.S. Department of Energy, Washington, D.C.

11-2 DOE Order 5480.1A, Chapter VII, "Fire Protection," August 13, 1981, U.S. Department of Energy, Washington, D.C.

This page intentionally left blank.

9 3 1 2 8 9 9 2 4 2 9

## 11.5 REFERENCES

11-1 DOE Order 5480.1A, Chapter V, "Safety of Nuclear Facilities," August 13, 1981, U.S. Department of Energy, Washington, D.C.

11-2 DOE Order 5480.1A, Chapter VII, "Fire Protection," August 13, 1981, U.S. Department of Energy, Washington, D.C.

This page intentionally left blank.

# 12.0 QUALITY ASSURANCE

## SCOPE

This Quality Assurance chapter is provided to identify quality assurance elements associated with the operating programs developed for the Waste Fractionization Facility (B Plant). The Quality Assurance Program was established through a Quality Assurance Program Plan to confirm that design quality requirements for B Plant have been accomplished in a safe and reliable manner.

## 12.1 ORGANIZATIONS

Organizational structures and respective charters for Rockwell functions participating in this operation are contained in the Rockwell Policies Manual (Ref. 12-1). These policies identify functional responsibilities, lines of communication within the individual organization, and the interface with peer groups for activities affecting quality and safety. The Quality Assurance organizational structure is shown in Figure 12-1.

## 12.2 QUALITY ASSURANCE PROGRAM

The Quality Assurance Program for B Plant is based on the ANSI/ASME Standard NQA-1 (Ref. 12-2), as endorsed by DOE-RL Order 5700.1A (Ref. 12-3).

A series of policies and procedures, prepared collectively by Rockwell functions as a proper response to the quality and safety aspects of the endorsed Standard, is shown in Table 12-1.

Elements and events described in the Quality Requirements Control Chart (Table 12-1) for B Plant are applicable when imposed by program management with functional management concurrence or when specified in Quality Assurance Program Plans for B Plant and WESF (Ref. 12-4, -5).

## 12.3 PERSONNEL TRAINING

Quality Assurance shall assure that personnel scheduled to perform or observe operations associated with B Plant are trained and qualified as specified by Plant Safety Policies (Ref. 12-1). As a minimum, those performing tasks in radiation areas shall have successfully completed training requirements specified in Section 6.0 of the Radiological Controls Manual (Ref. 12-6).

Quality Assurance personnel shall also be trained as specified in Quality Assurance Manual (Ref. 12-7) Procedure 4-201 in accordance with Plant Safety Policies.

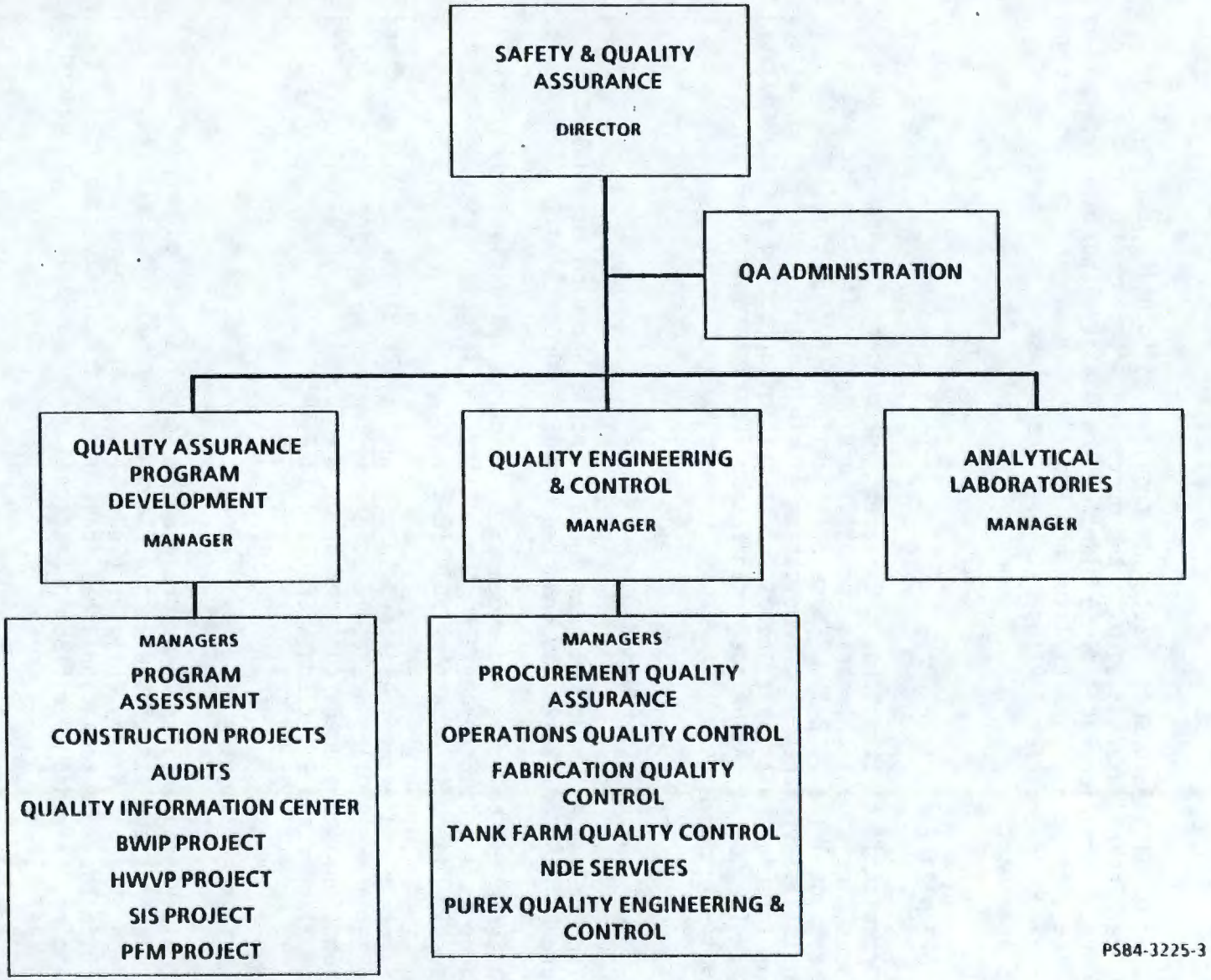


FIGURE 12-1. Quality Assurance Organization.

TABLE 12-1. Quality Requirements Control.

| Quality Assurance elements | Design and construction support | Facility operation | Maintenance operation | Material and equipment procurement |
|---|---|---|---|---|
| Element developed and implementation | Construction management (12-1, -2, -3, -4, -5, -9) | Facility management (12-1, -2, -3, -5) | Maintenance management (12-1, -2, -3, -5, -17) | Materials management (12-1, -2, -3, -12) |
| | Codes and standards (12-8) | Personnel training and qualification (12-1, -2 -6, -7, -16, -17, -18) | Production support (12-19, -21) | Supplier control (12-9, -10, -12) |
| | Drawing preparation (12-8, -9, -15) | Engineering (12-1, -5, -8) | Fabrication control (12-9, -10, -11, -16, -18) | Purchase requisition control (12-9, -10, -12, -13) |
| | QA levels (12-9, -15) | Plant operations controls (12-5, -10, -17, -19) | Calibration control (12-9, -22, -23) | PQA surveillance and receiving controls (12-9, -10, -12) |
| | Nuclear criticality planning (12-1, -5, -16) | Radiological controls (12-1, -6) | QE&C planning and inspection verification (12-1, -5, -9, -10, -18) | Material certification (1 2-8, -9, -10, -12) |
| | Design review (12-8) | Nuclear criticality safety (12-1, -20) | | Hypalon glove controls (12-1, -12) |
| | Test plans (12-8) | Waste handling (12-1) | | |
| | Plant safety (12-1, -6) | QE&C planning and surveillance inspection (12-1 -5, -9, -10) | | |
| | | Analytical laboratory (12-1, -9) | | |
| | | Glove control system (12-1, -9) | | |
| | | Plant safety (12-1, -6) | | |

Implemented Element Evaluation

Readiness Review (12-1, -8, -9)

Safety Analysis (12-1, -8)

Scheduled QA Audits (12-1, -9)

Scheduled Health, Safety and Environment Joint Audits (12-5, -9, -14, -20, -24)

Note: Numbers in parentheses identify Paragraph 12 10 references.

## 12.4 DESIGN SUPPORT

Engineering provides an effective design support system in the Engineering Procedures Manual (Ref. 12-8) that addresses the quality and safety aspects associated with operating B Plant.

Quality Assurance groups review and approve design documentation and utilize released documents to prepare quality verification plans for the acceptance of prescribed design attributes in accordance with the instructions in Quality Assurance Manuals (Ref. 12-9, -10, -11).

## 12.5 PROCUREMENT

Procurement Quality Assurance (PQA) conducts surveys of potential suppliers and monitors the performance of suppliers under contract to assure that the level of quality is planned for, and maintained commensurate with the quality and safety standards designated for B Plant Programs.

The Materials Function and PQA maintain procedural manuals (Ref. 12-9, -10, -12, -13) that provide the necessary procurement guidance for ensuring that all technical elements associated with B Plant are performed as ordered by engineering documentation.

Procurement Quality Assurance maintains a quality verification system that confirms compliance of the received product.

## 12.6 INSPECTION

Quality Assurance Manuals (Ref. 12-9, -10) and Quality Program Plan (Ref. 12-5) dictate the planning for inspection and the practices to be used by inspectors to assure compliance with design requirements.

Verification media may range from visual surveillance to complex machine set-ups, the prime consideration being the documented acceptance of quality and safety requirements. To that end, inspections:

- Are planned in a concise manner to minimize the potential for error
- Take place at the earliest practical point in the work sequence
- Are recorded and maintained readily available when significant to the history of the item or applicable to subsequent operations
- Are applied commensurate with the potential impact on personnel or environmental protection.

## 12.7 CALIBRATION AND CONTROL

Instruments, test equipment, and working standards are calibrated to recognized national standards. Instruments in use, other than those identified for "indication only," shall have valid evidence of a current calibration.

Laboratory instrument calibration is conducted to approved laboratory procedures (Ref. 12-11). Recalibration frequency is determined by the Applied Technology staff based on the instrument manufacturers recommendation and equipment performance records. Actual calibration work is performed by trained technicians or chemists.

## 12.8 INCIDENTS, NONCONFORMANCES, AND CORRECTIVE ACTION

Nonconforming conditions noted by Quality Assurance during material, component, or equipment acceptance are reported and dispositioned on the Nonconformance Report (NCR) in accordance with Quality Assurance Procedures (Ref. 12-9, -10).

Incidents that occur during the (B Plant) operational phase which could affect safety are reported as Unusual Occurrences per Accident Prevention Standard 32 (Ref. 12-14), or Off-Standard Conditions when noted in the Analytical Laboratories (Ref. 12-11).

Where corrective action is required to prevent a discrepancy recurrence beyond the scope of the NCR disposition, and Corrective Action Requests (Ref. 12-9, -10) are generated by the individual recognizing the need, coordinated by Quality Engineering and responded to by responsible management.

## 12.9 QUALITY ASSURANCE LABORATORY

Analytical Laboratories (AL) are responsible for maintaining a safe and effective operation in accordance with approved plans and procedures (Ref. 12-9, -11). Analytical Laboratory Management reviews AL operations on a continuing basis to maintain the safe condition status.

## 12.10 REFERENCES

12-1. RHO-MA-100, June 1983, Rockwell Hanford Operations Policies Manual, D. J. Cockeram, Rockwell Hanford Operations, Richland, Washington.

12-2. ANSI/ASME NQA-1-1983, Quality Assurance Requirements for Nuclear Facilities, The American Society of Mechanical Engineers, United Engineering Center, New York, New York.

12-3. RL 5700.1A, July 1983, Quality Assurance, The U.S. Department of Energy, Richland Operations Office, Richland, Washington.

12-4. RHO-QA-PL-1, December 1983, Project Quality Requirements Plan, L. T. Murphy, Rockwell Hanford Operations, Richland, Washington.

12-5. RHO-CD-863, May 1981, Waste Fractionization and Encapsulation, Rev. 1, E. F. Serabia, Rockwell Hanford Operations, Richland, Washington.

12-6. RHO-MA-220, February 1983, Radiological Standards and Operational Controls, Rev. 1, B. E. Knight, Rockwell Hanford Operations, Richland, Washington.

12-7. RHO-MA-152, May 1983, Quality Assurance Administrative Guide, R. D. Hammond, Rockwell Hanford Operations, Richland, Washington.

12-8. RHO-MA-115, June 1983, Engineering Procedures Manual, J. H. Roecker, Rockwell Hanford Operations, Richland, Washington.

12-9. RHO-MA-150, August 1983, Quality Assurance Manual, R. D. Hammond, Rockwell Hanford Operations, Richland, Washington.

12-10. RHO-MA-256, August 1983, Quality Assurance Instruction Manual, R. D. Hammond, Rockwell Hanford Operations, Richland, Washington.

12-11. RHO-MA-138, May 1982, Analytical Laboratories Operating Instructions Manual, C. P. Sutter, Rockwell Hanford Operations, Richland, Washington.

12-12. RHO-MA-135, June 1983, Material Policy and Procedures Manual, J. M. Carey, Rockwell Hanford Operations, Richland, Washington.

12-13. RHO-MA-212, January 1982, Guide for Preparing Purchase Requisitions and Store Orders, J. M. Carey, Rockwell Hanford Operations, Richland, Washington.

12-14. RHO-MA-221, May 1982, Accident Prevention Standards - Vol. 1 and 2, B. E. Knight, Rockwell Hanford Operations, Richland, Washington.

12-15. RHO-MA-112, May 1983, Drafting Standards Manual, J. H. Roecker, Rockwell Hanford Operations, Richland, Washington.

12-16. RHO-MA-181, July 1979, Welding Procedures Manual, L. Serl, Rockwell Hanford Operations, Richland, Washington.

12-17. RHO-PO-MA-1, May 1983, Plant Operations Administrative Manual, A. C. Crawford, Rockwell Hanford Operations, Richland, Washington.

12-18. RHO-MA-106, February 1981, NDE Special Process Procedures Manual, H. H. Kohl, Rockwell Hanford Operations, Richland, Washington.

12-19. RHO-PS-MA-2, August 1983, Utility Operations and Services Manual, J. D. Molnaa, Rockwell Hanford Operations, Richland, Washington.

12-20. RHO-MA-136, January 1983, Nuclear Criticality Safety Standards, B. E. Knight, Rockwell Hanford Operations, Richland, Washington.

12-21. RHO-PO-MA-2, August 1983, Fabrication Services Manual, J. W. Matthews, Rockwell Hanford Operations, Richland, Washington.

12-22. RHO-PS-MA-4, June 1983, Productive Support Calibration Procedures, G. R. Board, Rockwell Hanford Operations, Richland, Washington.

12-23. RHO-PS-MA-1, July 1983, Instrumentation Calibration Control Manual, G. R. Board, Rockwell Hanford Operations, Richland, Washington.

12-24. RHO-MA-222, July 1983, Hanford Radioactive Solid Waste Packaging, Storage, and Disposal Program, Rev. 1, F. E. Masa, Rockwell Hanford Operations, Richland, Washington.

This Page Intentionally Left Blank.

TABLE A-1. (Sheet 1 of 66)

CHEMICAL EVALUATION CHECKLIST

I. Chemical Identification and Intended Use ARC-9-359 Ion Exchange Resin - stored in central stores - cesium recovery in cell 18

II. Industrial Safety (Refer to instruction; Rate 0, 1, 2, 3, or 4)

A. Toxicity Rating NA*

B. Flammability Rating NA

C. Reactivity (Stability) Rating NA

D. Special Categories (Answer "yes" or "no")

1) Reacts with $H_2O$ No (Table 6)

2) Oxidizer No (Table 7)

3) Limited shelf-life/ No (Table 8)

Peroxidizable No (Table 8)

NOTE: A single rating of 3 or 4 or a "yes" in II requires further evaluation.

Evaluation:

III. Material Compatibility (indicate which materials the chemical is likely to contact and its chemical compatibility: S = satisfactory, L = limited use, and U = unsatisfactory)

| | Contact | Compatible |
|---|---|---|
| A. Stainless steel - 304, 316, etc. | Yes | S |
| B. Carbon steel | | |
| C. Other metals ( ) | | |
| D. Plastics | | |

TABLE A-1. (Sheet 2 of 66)

| | Contact | Compatible |
|---|---|---|
| E. Elastomers | | |
| F. Concrete | Yes | S |
| G. Protective clothing | Yes | S |

NOTE: A chemical must be compatible with all materials contacted. Discuss limited compatibility or special precautions here:

IV. Safety Concerns (Answer "yes" or "no")

| | |
|---|---|
| A. Personal contact possible | Yes |
| B. PH ← 5.0 or → 9.0 | No |
| C. Contains peroxides (particularly $H_2O_2$) | No |
| D. Contains oxidizing agents (e.g., $KMnO_4$, $K_2Cr_2O_7$) | No |
| E. Contains heavy metal or toxic elements (e.g., lead, cadmium, chromium) | No |
| F. Material evolves or generates harmful or explosive gas | No |

NOTE: A "yes" answer in IV indicates a potential safety problem; however, this does not exclude the chemical from use. Evaluate each identified concern.

Evaluation: A. Not particularly harmful.



9 3 1 2 8 9 9 2 4 4 1

TABLE A-1. (Sheet 3 of 66)

V. Criticality Concerns (Answer "yes" or "no")

| | | |
|---|---|---|
| A. | Substance will alter water moderation | No |
| B. | Substance will interfere with solid nuclear poison | No |
| C. | Substance will interfere with soluble nuclear poison | No |
| D. | Substance will interfere with laboratory detection of nuclear poison | No |

NOTE: A "yes" answer in V disqualifies a chemical from use until a comprehensive safety evaluation is completed.

TABLE A-1. (Sheet 4 of 66)

CHEMICAL EVALUATION CHECKLIST

I. Chemical Identification and Intended Use Carbon dioxide ($CO_2$) liquified gas - bulk storage in outside tank - make-up of ammonium carbonate solution

II. Industrial Safety (Refer to instruction; Rate 0, 1, 2, 3, or 4)

A. Toxicity Rating 0 (Table 2)

B. Flammability Rating 0 (Table 4)

C. Reactivity (Stability) Rating 0 (Table 5)

D. Special Categories (Answer "yes" or "no")

1) Reacts with $H_2O$ No (Table 6)

2) Oxidizer No (Table 7)

3) Limited shelf-life/ No (Table 8)

Peroxidizable No (Table 8)

NOTE: A single rating of 3 or 4 or a "yes" in II requires further evaluation.

Evaluation: _____

III. Material Compatibility (indicate which materials the chemical is likely to contact and its chemical compatibility: S = satisfactory, L = limited use, and U = unsatisfactory)

| | Contact | Compatible |
|---|---|---|
| A. Stainless steel - 304, 316, etc. | Yes | S |
| B. Carbon steel | Yes | S |
| C. Other metals ( ) | | |
| D. Plastics | Yes | S |



9 3 1 2 8 9 9 2 1 4 4 3

TABLE A-1. (Sheet 5 of 66)

| | Contact | Compatible |
|---|---|---|
| E. Elastomers | | |
| F. Concrete | Yes | S |
| G. Protective clothing | Yes | I |

NOTE: A chemical must be compatible with all materials contacted. Discuss limited compatibility or special precautions here:

G. $CO_2$, per se, is not incompatible, but precuations should be taken because of its possible very low temperatures at time of contact.

IV. Safety Concerns (Answer "yes" or "no")

| | |
|---|---|
| A. Personal contact possible | No |
| B. PH ← 5.0 or → 9.0 | No |
| C. Contains peroxides (particularly $H_2O_2$) | No |
| D. Contains oxidizing agents (e.g., $KMnO_4$, $K_2Cr_2O_7$) | No |
| E. Contains heavy metal or toxic elements (e.g., lead, cadmium, chromium) | No |
| F. Material evolves or generates harmful or explosive gas | No |

NOTE: A "yes" answer in IV indicates a potential safety problem; however, this does not exclude the chemical from use. Evaluate each identified concern.

Evaluation:

TABLE A-1. (Sheet 6 of 66)

V. Criticality Concerns (Answer "yes" or "no")

A. Substance will alter water moderation ___No___

B. Substance will interfere with solid nuclear poison ___No___

C. Substance will interfere with soluble nuclear poison ___No___

D. Substance will interfere with laboratory detection of nuclear poison ___No___

NOTE: A "yes" answer in V disqualifies a chemical from use until a comprehensive safety evaluation is completed.

TABLE A-1. (Sheet 7 of 66)

CHEMICAL EVALUATION CHECKLIST

I. Chemical Identification and Intended Use Citric acid - HOC $(CH_2COOH)_2COOH$ - 50 lb bags - complexant for various impurity removal; decontamination

II. Industrial Safety (Refer to instruction; Rate 0, 1, 2, 3, or 4)

A. Toxicity Rating 1 (Table 2)

B. Flammability Rating 0 (Table 4)

C. Reactivity (Stability) Rating 0 (Table 5)

D. Special Categories (Answer "yes" or "no")

1) Reacts with $H_2O$ No (Table 6)

2) Oxidizer No (Table 7)

3) Limited shelf-life/ No (Table 8)

Peroxidizable No (Table 8)

NOTE: A single rating of 3 or 4 or a "yes" in II requires further evaluation.

Evaluation: _____

III. Material Compatibility (indicate which materials the chemical is likely to contact and its chemical compatibility: S = satisfactory, L = limited use, and U = unsatisfactory)

| | Contact | Compatible |
|---|---|---|
| A. Stainless steel - 304, 316, etc. | Yes | S |
| B. Carbon steel | | |
| C. Other metals ( ) | | |
| D. Plastics | | |

TABLE A-1. (Sheet 8 of 66)

| | Contact | Compatible |
|---|---|---|
| E. Elastomers | | |
| F. Concrete | Yes | S |
| G. Protective clothing | Yes | S |

NOTE: A chemical must be compatible with all materials contacted. Discuss limited compatibility or special precautions here:

IV. Safety Concerns (Answer "yes" or "no")

| | |
|---|---|
| A. Personal contact possible | Yes |
| B. PH ← 5.0 or → 9.0 | Yes |
| C. Contains peroxides (particularly $H_2O_2$) | No |
| D. Contains oxidizing agents (e.g., $KMnO_4$, $K_2Cr_2O_7$) | No |
| E. Contains heavy metal or toxic elements (e.g., lead, cadmium, chromium) | No |
| F. Material evolves or generates harmful or explosive gas | No |

NOTE: A "yes" answer in IV indicates a potential safety problem; however, this does not exclude the chemical from use. Evaluate each identified concern.

Evaluation: A, B: Under accident or emergency conditions. Carefully handled per existing engineered and administrative barriers.



9 3 1 2 8 9 9 2 4 4 7

TABLE A-1. (Sheet 9 of 66)

V. Criticality Concerns (Answer "yes" or "no")

A. Substance will alter water moderation ___No___

B. Substance will interfere with solid nuclear poison ___No___

C. Substance will interfere with soluble nuclear poison ___No___

D. Substance will interfere with laboratory detection of nuclear poison ___No___

NOTE: A "yes" answer in V disqualifies a chemical from use until a comprehensive safety evaluation is completed.

TABLE A-1. (Sheet 10 of 66)

CHEMICAL EVALUATION CHECKLIST

I. Chemical Identification and Intended Use Dearcide 717 - 55 gal drums - algicide used to prevent algae growth in coooling water

II. Industrial Safety (Refer to instruction; Rate 0, 1, 2, 3, or 4)

A. Toxicity Rating 1 (Table 3)

B. Flammability Rating 0 (Table 4)

C. Reactivity (Stability) Rating 0 (Table 5)

D. Special Categories (Answer "yes" or "no")

1) Reacts with $H_2O$ No (Table 6)

2) Oxidizer No (Table 7)

3) Limited shelf-life/ No (Table 8)

Peroxidizable No (Table 8)

NOTE: A single rating of 3 or 4 or a "yes" in II requires further evaluation.

Evaluation:

III. Material Compatibility (indicate which materials the chemical is likely to contact and its chemical compatibility: S = satisfactory, L = limited use, and U = unsatisfactory)

| | Contact | Compatible |
|---|---|---|
| A. Stainless steel - 304, 316, etc. | Yes | S |
| B. Carbon steel | | |
| C. Other metals ( ) | | |
| D. Plastics | | |



9 3 1 2 8 9 9 2 4 4 9

TABLE A-1. (Sheet 11 of 66)

| | Contact | Compatible |
|---|---|---|
| E. Elastomers | | |
| F. Concrete | Yes | S |
| G. Protective clothing | Yes | S |

NOTE: A chemical must be compatible with all materials contacted. Discuss limited compatibility or special precautions here:

IV. Safety Concerns (Answer "yes" or "no")

| | |
|---|---|
| A. Personal contact possible | Yes |
| B. PH ← 5.0 or → 9.0 | No |
| C. Contains peroxides (particularly $H_2O_2$) | No |
| D. Contains oxidizing agents (e.g., $KMnO_4$, $K_2Cr_2O_7$) | No |
| E. Contains heavy metal or toxic elements (e.g., lead, cadmium, chromium) | No |
| F. Material evolves or generates harmful or explosive gas | No |

NOTE: A "yes" answer in IV indicates a potential safety problem; however, this does not exclude the chemical from use. Evaluate each identified concern.

Evaluation: A. Not particularly harmful. Should be washed off after contact.

9312892450

TABLE A-1. (Sheet 12 of 66)

V. Criticality Concerns (Answer "yes" or "no")

A. Substance will alter water moderation ___No___

B. Substance will interfere with solid nuclear poison ___No___

C. Substance will interfere with soluble nuclear poison ___No___

D. Substance will interfere with laboratory detection of nuclear poison ___No___

NOTE: A "yes" answer in V disqualifies a chemical from use until a comprehensive safety evaluation is completed.

TABLE A-1. (Sheet 13 of 66)

CHEMICAL EVALUATION CHECKLIST

I. Chemical Identification and Intended Use Hydroxyacetic acid - $HOCH_2COOH$ - solvent conditioning for solvent extraction

II. Industrial Safety (Refer to instruction; Rate 0, 1, 2, 3, or 4)

A. Toxicity Rating 1 (Table 3)

B. Flammability Rating 0 (Table 4)

C. Reactivity (Stability) Rating 0 (Table 5)

D. Special Categories (Answer "yes" or "no")

1) Reacts with $H_2O$ No (Table 6)

2) Oxidizer No (Table 7)

3) Limited shelf-life/ No (Table 8)

Peroxidizable No (Table 8)

NOTE: A single rating of 3 or 4 or a "yes" in II requires further evaluation.

Evaluation:

III. Material Compatibility (indicate which materials the chemical is likely to contact and its chemical compatibility: S = satisfactory, L = limited use, and U = unsatisfactory)

| | Contact | Compatible |
|---|---|---|
| A. Stainless steel - 304, 316, etc. | Yes | S |
| B. Carbon steel | | |
| C. Other metals ( ) | | |
| D. Plastics | | |

TABLE A-1. (Sheet 14 of 66)

| | Contact | Compatible |
|---|---|---|
| E. Elastomers | | |
| F. Concrete | Yes | U |
| G. Protective clothing | Yes | L |

NOTE: A chemical must be compatible with all materials contacted. Discuss limited compatibility or special precautions here:

F, G. Only under accident or emergency conditions. F. Will corrode concrete. G. May not be compatible with some types of protective clothing.

IV. Safety Concerns (Answer "yes" or "no")

| | |
|---|---|
| A. Personal contact possible | Yes |
| B. PH ← 5.0 or → 9.0 | Yes |
| C. Contains peroxides (particularly $H_2O_2$) | No |
| D. Contains oxidizing agents (e.g., $KMnO_4$, $K_2Cr_2O_7$) | No |
| E. Contains heavy metal or toxic elements (e.g., lead, cadmium, chromium) | No |
| F. Material evolves or generates harmful or explosive gas | No |

NOTE: A "yes" answer in IV indicates a potential safety problem; however, this does not exclude the chemical from use. Evaluate each identified concern.

Evaluation: A, B. Only under accident or emergency conditions. Carefully handled per existing engineered and administrative barriers.



9 3 1 2 8 9 9 2 4 5 3

TABLE A-1. (Sheet 15 of 66)

V. Criticality Concerns (Answer "yes" or "no")

| | | |
|---|---|---|
| A. | Substance will alter water moderation | No |
| B. | Substance will interfere with solid nuclear poison | No |
| C. | Substance will interfere with soluble nuclear poison | No |
| D. | Substance will interfere with laboratory detection of nuclear poison | No |

NOTE: A "yes" answer in V disqualifies a chemical from use until a comprehensive safety evaluation is completed.

TABLE A-1. (Sheet 16 of 66)

CHEMICAL EVALUATION CHECKLIST

I. Chemical Identification and Intended Use Nitric acid 57% - $HNO_3$ - bulk storage in outside tank - acidification of various solutions

II. Industrial Safety (Refer to instruction; Rate 0, 1, 2, 3, or 4)

A. Toxicity Rating 1 (Table 2)

B. Flammability Rating 0 (Table 4)

C. Reactivity (Stability) Rating 2 (Table 5)

D. Special Categories (Answer "yes" or "no")

1) Reacts with $H_2O$ No (Table 6)

2) Oxidizer Yes (Table 7)

3) Limited shelf-life/ No (Table 8)

Peroxidizable No (Table 8)

NOTE: A single rating of 3 or 4 or a "yes" in II requires further evaluation.

Evaluation: D2 used only per careful administrative control and engineered barriers.

III. Material Compatibility (indicate which materials the chemical is likely to contact and its chemical compatibility: S = satisfactory, L = limited use, and U = unsatisfactory)

| | Contact | Compatible |
|---|---|---|
| A. Stainless steel - 304, 316, etc. | Yes | L |
| B. Carbon steel | | |
| C. Other metals ( ) | | |
| D. Plastics | Yes | S |



9 3 1 2 8 9 9 2 4 5 5

TABLE A-1. (Sheet 17 of 66)

| | Contact | Compatible |
|---|---|---|
| E. Elastomers | | |
| F. Concrete | Yes | U |
| G. Protective clothing | Yes | U |

NOTE: A chemical must be compatible with all materials contacted. Discuss limited compatibility or special precautions here:

A. Not compatible if concentrated and at elevated temperatures. Appropriate engineered and administrative controls in effect.

F, G. Contact only under accident or emergency conditions. Current procedures in effect for appropriate response at such times.

IV. Safety Concerns (Answer "yes" or "no")

| | |
|---|---|
| A. Personal contact possible | Yes |
| B. PH ← 5.0 or → 9.0 | Yes |
| C. Contains peroxides (particularly $H_2O_2$) | No |
| D. Contains oxidizing agents (e.g., $KMnO_4$, $K_2Cr_2O_7$) | Yes |
| E. Contains heavy metal or toxic elements (e.g., lead, cadmium, chromium) | No |
| F. Material evolves or generates harmful or explosive gas | Yes |

NOTE: A "yes" answer in IV indicates a potential safety problem; however, this does not exclude the chemical from use. Evaluate each identified concern.

Evaluation: A, B. Engineered and administrative barriers are in effect to preclude personal contact. D, F. Material itself is an oxidizer and can generate harmful gases with various materials. Engineered barriers and administrative controls in effect to preclude personal contact.

TABLE A-1. (Sheet 18 of 66)

V. Criticality Concerns (Answer "yes" or "no")

| | | |
|---|---|---|
| A. | Substance will alter water moderation | No |
| B. | Substance will interfere with solid nuclear poison | No |
| C. | Substance will interfere with soluble nuclear poison | No |
| D. | Substance will interfere with laboratory detection of nuclear poison | No |

NOTE: A "yes" answer in V disqualifies a chemical from use until a comprehensive safety evaluation is completed.

TABLE A-1. (Sheet 19 of 66)

CHEMICAL EVALUATION CHECKLIST

I. Chemical Identification and Intended Use Normal paraffin hydrocarbon (NPH) - bulk storage in outside tank - diluent for solvent extraction

II. Industrial Safety (Refer to instruction; Rate 0, 1, 2, 3, or 4)

A. Toxicity Rating 0 (Table 2)

B. Flammability Rating 3 (Table 4)

C. Reactivity (Stability) Rating 1 (Table 5)

D. Special Categories (Answer "yes" or "no")

1) Reacts with $H_2O$ No (Table 6)

2) Oxidizer No (Table 7)

3) Limited shelf-life/ No (Table 8)

Peroxidizable No (Table 8)

NOTE: A single rating of 3 or 4 or a "yes" in II requires further evaluation.

Evaluation: Material is high boiling (200-400°F) mixture of $C_{10}$ to $C_{14}$ hydrocarbons. These materials are not highly volatile, but will burn. Normal precautions for handling flammable liquids should prevail.

III. Material Compatibility (indicate which materials the chemical is likely to contact and its chemical compatibility: S = satisfactory, L = limited use, and U = unsatisfactory)

| | Contact | Compatible |
|---|---|---|
| A. Stainless steel - 304, 316, etc. | Yes | S |
| B. Carbon steel | | |
| C. Other metals ( ) | | |
| D. Plastics | | |

TABLE A-1. (Sheet 20 of 66)

| | Contact | Compatible |
|---|---|---|
| E. Elastomers | | |
| F. Concrete | Yes | S |
| G. Protective clothing | Yes | S |

NOTE: A chemical must be compatible with all materials contacted. Discuss limited compatibility or special precautions here:

IV. Safety Concerns (Answer "yes" or "no")

| | |
|---|---|
| A. Personal contact possible | Yes |
| B. PH ← 5.0 or → 9.0 | No |
| C. Contains peroxides (particularly $H_2O_2$) | No |
| D. Contains oxidizing agents (e.g., $KMnO_4$, $K_2Cr_2O_7$) | No |
| E. Contains heavy metal or toxic elements (e.g., lead, cadmium, chromium) | No |
| F. Material evolves or generates harmful or explosive gas | No |

NOTE: A "yes" answer in IV indicates a potential safety problem; however, this does not exclude the chemical from use. Evaluate each identified concern.

Evaluation: A. No particular hazard. Possible skin irritation upon prolonged contact. Should be washed off after contact.



9 3 1 2 8 9 9 2 4 5 9

TABLE A-1. (Sheet 21 of 66)

V. Criticality Concerns (Answer "yes" or "no")

| | | |
|---|---|---|
| A. | Substance will alter water moderation | No |
| B. | Substance will interfere with solid nuclear poison | No |
| C. | Substance will interfere with soluble nuclear poison | No |
| D. | Substance will interfere with laboratory detection of nuclear poison | No |

NOTE: A "yes" answer in V disqualifies a chemical from use until a comprehensive safety evaluation is completed.

9 1 2 0 9 9 . 4 6 0

TABLE A-1. (Sheet 22 of 66)

CHEMICAL EVALUATION CHECKLIST

I. Chemical Identification and Intended Use Oxalic acid HOOC-COOH - 50 lb bags - impurities scavenger; decontamination

II. Industrial Safety (Refer to instruction; Rate 0, 1, 2, 3, or 4)

A. Toxicity Rating 0 (Table 2)

B. Flammability Rating 0 (Table 4)

C. Reactivity (Stability) Rating 2 (Table 5)

D. Special Categories (Answer "yes" or "no")

1) Reacts with $H_2O$ No (Table 6)

2) Oxidizer (Table 7)

3) Limited shelf-life/ No (Table 8)

Peroxidizable No (Table 8)

NOTE: A single rating of 3 or 4 or a "yes" in II requires further evaluation.

Evaluation: C. May generate sufficient heat on contact with strong oxidizing agents to ignite combustibles.

III. Material Compatibility (indicate which materials the chemical is likely to contact and its chemical compatibility: S = satisfactory, L = limited use, and U = unsatisfactory)

| | Contact | Compatible |
|---|---|---|
| A. Stainless steel - 304, 316, etc. | Yes | S |
| B. Carbon steel | | |
| C. Other metals ( ) | | |
| D. Plastics | | |



9 3 1 2 8 9 9 2 4 6 1

TABLE A-1. (Sheet 23 of 66)

| | Contact | Compatible |
|---|---|---|
| E. Elastomers | | |
| F. Concrete | | |
| G. Protective clothing | Yes | S |

NOTE: A chemical must be compatible with all materials contacted. Discuss limited compatibility or special precautions here:

IV. Safety Concerns (Answer "yes" or "no")

| | |
|---|---|
| A. Personal contact possible | Yes |
| B. PH ← 5.0 or → 9.0 | Yes |
| C. Contains peroxides (particularly $H_2O_2$) | No |
| D. Contains oxidizing agents (e.g., $KMnO_4$, $K_2Cr_2O_7$) | No |
| E. Contains heavy metal or toxic elements (e.g., lead, cadmium, chromium) | No |
| F. Material evolves or generates harmful or explosive gas | No |

NOTE: A "yes" answer in IV indicates a potential safety problem; however, this does not exclude the chemical from use. Evaluate each identified concern.

Evaluation: A. Not harmful as solid. Rinsing contact area is satisfactory. B. Not harmful if rinsed. Prolonged contact may be minor skin irritant.

9 3 1 2 8 9 9 2 4 6 2

TABLE A-1. (Sheet 24 of 66)

V. Criticality Concerns (Answer "yes" or "no")

| | | |
|---|---|---|
| A. | Substance will alter water moderation | No |
| B. | Substance will interfere with solid nuclear poison | No |
| C. | Substance will interfere with soluble nuclear poison | No |
| D. | Substance will interfere with laboratory detection of nuclear poison | No |

NOTE: A "yes" answer in V disqualifies a chemical from use until a comprehensive safety evaluation is completed.

TABLE A-1. (Sheet 25 of 66)

CHEMICAL EVALUATION CHECKLIST

I. Chemical Identification and Intended Use Phosphotungstic acid $H_3[P(W_3O_{10})_4]\cdot 14H_2O$ - bulk storage in precipitant in cesium recovery

II. Industrial Safety (Refer to instruction; Rate 0, 1, 2, 3, or 4)

A. Toxicity Rating 2 (Tables 2,3)

B. Flammability Rating 0 (Table 4)

C. Reactivity (Stability) Rating 1 (Estimated)

D. Special Categories (Answer "yes" or "no")

1) Reacts with $H_2O$ No (Table 6)

2) Oxidizer No (Table 7)

3) Limited shelf-life/ No (Table 8)

Peroxidizable No (Table 8)

NOTE: A single rating of 3 or 4 or a "yes" in II requires further evaluation.

Evaluation:

III. Material Compatibility (indicate which materials the chemical is likely to contact and its chemical compatibility: S = satisfactory, L = limited use, and U = unsatisfactory)

| | Contact | Compatible |
|---|---|---|
| A. Stainless steel - 304, 316, etc. | Yes | S |
| B. Carbon steel | | |
| C. Other metals ( ) | | |
| D. Plastics | | |

TABLE A-1. (Sheet 26 of 66)

| | Contact | Compatible |
|---|---|---|
| E. Elastomers | | |
| F. Concrete | Yes | |
| G. Protective clothing | Yes | |

NOTE: A chemical must be compatible with all materials contacted. Discuss limited compatibility or special precautions here:

IV. Safety Concerns (Answer "yes" or "no")

| | |
|---|---|
| A. Personal contact possible | Yes |
| B. PH ← 5.0 or → 9.0 | Yes |
| C. Contains peroxides (particularly $H_2O_2$) | No |
| D. Contains oxidizing agents (e.g., $KMnO_4$, $K_2Cr_2O_7$) | No |
| E. Contains heavy metal or toxic elements (e.g., lead, cadmium, chromium) | Yes |
| F. Material evolves or generates harmful or explosive gas | No |

NOTE: A "yes" answer in IV indicates a potential safety problem; however, this does not exclude the chemical from use. Evaluate each identified concern.

Evaluation: A, B. May be sufficient acid to produce acid burn. Should be rinsed off immediately upon contact, and first aid administered. Administrative controls in effect to ensure proper handling and safety.



9 3 1 2 8 9 9 2 4 6 5

TABLE A-1. (Sheet 27 of 66)

V. Criticality Concerns (Answer "yes" or "no")

| | | |
|---|---|---|
| A. | Substance will alter water moderation | No |
| B. | Substance will interfere with solid nuclear poison | No |
| C. | Substance will interfere with soluble nuclear poison | No |
| D. | Substance will interfere with laboratory detection of nuclear poison | No |

NOTE: A "yes" answer in V disqualifies a chemical from use until a comprehensive safety evaluation is completed.

TABLE A-1. (Sheet 28 of 66)

CHEMICAL EVALUATION CHECKLIST

I. Chemical Identification and Intended Use Rare earth solution 2.5M - bulk storage in 30 gal drums - used in strontium processing

II. Industrial Safety (Refer to instruction; Rate 0, 1, 2, 3, or 4)

A. Toxicity Rating 1 (Table 2,3)

B. Flammability Rating 0 (Table 4)

C. Reactivity (Stability) Rating 0 (Table 5)

D. Special Categories (Answer "yes" or "no")

1) Reacts with $H_2O$ No (Table 6)

2) Oxidizer No (Table 7)

3) Limited shelf-life/ No (Table 8)

Peroxidizable No (Table 8)

NOTE: A single rating of 3 or 4 or a "yes" in II requires further evaluation.

Evaluation: _____

III. Material Compatibility (indicate which materials the chemical is likely to contact and its chemical compatibility: S = satisfactory, L = limited use, and U = unsatisfactory)

| | Contact | Compatible |
|---|---|---|
| A. Stainless steel - 304, 316, etc. | Yes | S |
| B. Carbon steel | | |
| C. Other metals ( ) | | |
| D. Plastics | | |



9 3 1 2 8 9 9 2 1 4 6 7

TABLE A-1. (Sheet 29 of 66)

| | Contact | Compatible |
|---|---|---|
| E. Elastomers | | |
| F. Concrete | Yes | |
| G. Protective clothing | Yes | |

NOTE: A chemical must be compatible with all materials contacted. Discuss limited compatibility or special precautions here:

IV. Safety Concerns (Answer "yes" or "no")

| | |
|---|---|
| A. Personal contact possible | Yes |
| B. PH ← 5.0 or → 9.0 | Yes |
| C. Contains peroxides (particularly $H_2O_2$) | No |
| D. Contains oxidizing agents (e.g., $KMnO_4$, $K_2Cr_2O_7$) | No |
| E. Contains heavy metal or toxic elements (e.g., lead, cadmium, chromium) | Yes |
| F. Material evolves or generates harmful or explosive gas | No |

NOTE: A "yes" answer in IV indicates a potential safety problem; however, this does not exclude the chemical from use. Evaluate each identified concern.

Evaluation: A, B. May be sufficient acid to cause acid burn. Should be rinsed off immediately upon contact, and first aid administered. Administrative controls in effect to ensure proper handling and safety

TABLE A-1. (Sheet 30 of 66)

V. Criticality Concerns (Answer "yes" or "no")

| | | |
|---|---|---|
| A. | Substance will alter water moderation | No |
| B. | Substance will interfere with solid nuclear poison | No |
| C. | Substance will interfere with soluble nuclear poison | No |
| D. | Substance will interfere with laboratory detection of nuclear poison | No |

NOTE: A "yes" answer in V disqualifies a chemical from use until a comprehensive safety evaluation is completed.

TABLE A-1. (Sheet 31 of 66)

CHEMICAL EVALUATION CHECKLIST

I. Chemical Identification and Intended Use Scale clean descaler - 55 gal drums - used for cleaning scale from equipment

II. Industrial Safety (Refer to instruction; Rate 0, 1, 2, 3, or 4)

A. Toxicity Rating 1 (Table 3)

B. Flammability Rating 0 (Table 4)

C. Reactivity (Stability) Rating 2 (Table 5)

D. Special Categories (Answer "yes" or "no")

1) Reacts with $H_2O$ No (Table 6)

2) Oxidizer No (Table 7)

3) Limited shelf-life/ No (Table 8)

Peroxidizable No (Table 8)

NOTE: A single rating of 3 or 4 or a "yes" in II requires further evaluation.

Evaluation:

III. Material Compatibility (indicate which materials the chemical is likely to contact and its chemical compatibility: S = satisfactory, L = limited use, and U = unsatisfactory)

| | Contact | Compatible |
|---|---|---|
| A. Stainless steel - 304, 316, etc. | Yes | S |
| B. Carbon steel | | |
| C. Other metals ( ) | | |
| D. Plastics | | |

TABLE A-1. (Sheet 32 of 66)

| | Contact | Compatible |
|---|---|---|
| E. Elastomers | | |
| F. Concrete | Yes | |
| G. Protective clothing | Yes | |

NOTE: A chemical must be compatible with all materials contacted. Discuss limited compatibility or special precautions here:

IV. Safety Concerns (Answer "yes" or "no")

| | |
|---|---|
| A. Personal contact possible | Yes |
| B. PH ← 5.0 or → 9.0 | Yes |
| C. Contains peroxides (particularly $H_2O_2$) | No |
| D. Contains oxidizing agents (e.g., $KMnO_4$, $K_2Cr_2O_7$) | No |
| E. Contains heavy metal or toxic elements (e.g., lead, cadmium, chromium) | No |
| F. Material evolves or generates harmful or explosive gas | No |

NOTE: A "yes" answer in IV indicates a potential safety problem; however, this does not exclude the chemical from use. Evaluate each identified concern.

Evaluation: A, B. Material is acidic. Administrative controls and engineered barriers are in effect to prevent personal contact or to minimize effects if such occurs.



9 3 1 2 8 9 9 2 4 7 1

TABLE A-1. (Sheet 33 of 66)

V. Criticality Concerns (Answer "yes" or "no")

A. Substance will alter water moderation ___No___

B. Substance will interfere with solid nuclear poison ___No___

C. Substance will interfere with soluble nuclear poison ___No___

D. Substance will interfere with laboratory detection of nuclear poison ___No___

NOTE: A "yes" answer in V disqualifies a chemical from use until a comprehensive safety evaluation is completed.

TABLE A-1. (Sheet 34 of 66)

CHEMICAL EVALUATION CHECKLIST

I. Chemical Identification and Intended Use Sodium citrate $Na_2[HOC(CH_2COOH)_2COOH]$ - 50 lb bags - complexant for various impurity removal

II. Industrial Safety (Refer to instruction; Rate 0, 1, 2, 3, or 4)

A. Toxicity Rating 1 (Table 3)

B. Flammability Rating 0 (Table 4)

C. Reactivity (Stability) Rating 1 (Table 5)

D. Special Categories (Answer "yes" or "no")

1) Reacts with $H_2O$ No (Table 6)

2) Oxidizer No (Table 7)

3) Limited shelf-life/ No (Table 8)

Peroxidizable No (Table 8)

NOTE: A single rating of 3 or 4 or a "yes" in II requires further evaluation.

Evaluation: _____

III. Material Compatibility (indicate which materials the chemical is likely to contact and its chemical compatibility: S = satisfactory, L = limited use, and U = unsatisfactory)

| | Contact | Compatible |
|---|---|---|
| A. Stainless steel - 304, 316, etc. | Yes | S |
| B. Carbon steel | | |
| C. Other metals ( ) | | |
| D. Plastics | | |



9 3 1 2 8 9 9 3 4 7 3

TABLE A-1. (Sheet 35 of 66)

| | Contact | Compatible |
|---|---|---|
| E. Elastomers | | |
| F. Concrete | Yes | S |
| G. Protective clothing | Yes | S |

NOTE: A chemical must be compatible with all materials contacted. Discuss limited compatibility or special precautions here:

IV. Safety Concerns (Answer "yes" or "no")

| | |
|---|---|
| A. Personal contact possible | Yes |
| B. PH ← 5.0 or → 9.0 | No |
| C. Contains peroxides (particularly $H_2O_2$) | No |
| D. Contains oxidizing agents (e.g., $KMnO_4$, $K_2Cr_2O_7$) | No |
| E. Contains heavy metal or toxic elements (e.g., lead, cadmium, chromium) | No |
| F. Material evolves or generates harmful or explosive gas | No |

NOTE: A "yes" answer in IV indicates a potential safety problem; however, this does not exclude the chemical from use. Evaluate each identified concern.

Evaluation: A. Not particularly harmful. Should be washed off after contact.

TABLE A-1. (Sheet 36 of 66)

V. Criticality Concerns (Answer "yes" or "no")

A. Substance will alter water moderation ___No___

B. Substance will interfere with solid nuclear poison ___No___

C. Substance will interfere with soluble nuclear poison ___No___

D. Substance will interfere with laboratory detection of nuclear poison ___No___

NOTE: A "yes" answer in V disqualifies a chemical from use until a comprehensive safety evaluation is completed.

TABLE A-1. (Sheet 37 of 66)

CHEMICAL EVALUATION CHECKLIST

I. Chemical Identification and Intended Use Sodium gluconate - 50 lb bags - complexant for various impurity removals; decontamination

II. Industrial Safety (Refer to instruction; Rate 0, 1, 2, 3, or 4)

A. Toxicity Rating 0 (Table 3)

B. Flammability Rating 0 (Table 4)

C. Reactivity (Stability) Rating 0 (Table 5)

D. Special Categories (Answer "yes" or "no")

1) Reacts with $H_2O$ No (Table 6)

2) Oxidizer No (Table 7)

3) Limited shelf-life/ No (Table 8)

Peroxidizable No (Table 8)

NOTE: A single rating of 3 or 4 or a "yes" in II requires further evaluation.

Evaluation:

III. Material Compatibility (indicate which materials the chemical is likely to contact and its chemical compatibility: S = satisfactory, L = limited use, and U = unsatisfactory)

| | Contact | Compatible |
|---|---|---|
| A. Stainless steel - 304, 316, etc. | Yes | S |
| B. Carbon steel | | |
| C. Other metals ( ) | | |
| D. Plastics | | |

TABLE A-1. (Sheet 38 of 66)

| | Contact | Compatible |
|---|---|---|
| E. Elastomers | | |
| F. Concrete | Yes | S |
| G. Protective clothing | Yes | S |

NOTE: A chemical must be compatible with all materials contacted. Discuss limited compatibility or special precautions here:

IV. Safety Concerns (Answer "yes" or "no")

| | |
|---|---|
| A. Personal contact possible | Yes |
| B. PH ← 5.0 or → 9.0 | No |
| C. Contains peroxides (particularly $H_2O_2$) | No |
| D. Contains oxidizing agents (e.g., $KMnO_4$, $K_2Cr_2O_7$) | No |
| E. Contains heavy metal or toxic elements (e.g., lead, cadmium, chromium) | No |
| F. Material evolves or generates harmful or explosive gas | No |

NOTE: A "yes" answer in IV indicates a potential safety problem; however, this does not exclude the chemical from use. Evaluate each identified concern.

Evaluation: A. Not particularly harmful. Should be washed off after contact.



9 3 1 2 8 9 9 2 4 7 7

TABLE A-1. (Sheet 39 of 66)

V. Criticality Concerns (Answer "yes" or "no")

A. Substance will alter water moderation ___No___

B. Substance will interfere with solid nuclear poison ___No___

C. Substance will interfere with soluble nuclear poison ___No___

D. Substance will interfere with laboratory detection of nuclear poison ___No___

NOTE: A "yes" answer in V disqualifies a chemical from use until a comprehensive safety evaluation is completed.

TABLE A-1. (Sheet 40 of 66)

CHEMICAL EVALUATION CHECKLIST

I. Chemical Identification and Intended Use Sodium hydroxide 50% - NaOH - bulk storage in outside tank - pH control in various processing steps

II. Industrial Safety (Refer to instruction; Rate 0, 1, 2, 3, or 4)

A. Toxicity Rating 3 (Table 2)

B. Flammability Rating 0 (Table 4)

C. Reactivity (Stability) Rating 0 (Table 5)

D. Special Categories (Answer "yes" or "no")

1) Reacts with $H_2O$ No (Table 6)

2) Oxidizer No (Table 7)

3) Limited shelf-life/ No (Table 8)

Peroxidizable No (Table 8)

NOTE: A single rating of 3 or 4 or a "yes" in II requires further evaluation.

Evaluation: A. As solid material. Probability of inhaling this quantity is very low because of its solution form.

III. Material Compatibility (indicate which materials the chemical is likely to contact and its chemical compatibility: S = satisfactory, L = limited use, and U = unsatisfactory)

| | Contact | Compatible |
|---|---|---|
| A. Stainless steel - 304, 316, etc. | Yes | S |
| B. Carbon steel | Yes | S |
| C. Other metals ( ) | | |
| D. Plastics | | |



9 3 1 2 8 9 9 2 1 4 7 9

TABLE A-1. (Sheet 41 of 66)

| | Contact | Compatible |
|---|---|---|
| E. Elastomers | | |
| F. Concrete | Yes | L |
| G. Protective clothing | Yes | U |

NOTE: A chemical must be compatible with all materials contacted. Discuss limited compatibility or special precautions here:

F. Contact only under accident or emergency conditions. Prolonged contact of material will corrode concrete. G. Contact only under accident or emergency conditions. Engineered and administrative barriers are in effect to preclude same.

IV. Safety Concerns (Answer "yes" or "no")

| | |
|---|---|
| A. Personal contact possible | Yes |
| B. PH ← 5.0 or → 9.0 | Yes |
| C. Contains peroxides (particularly $H_2O_2$) | No |
| D. Contains oxidizing agents (e.g., $KMnO_4$, $K_2Cr_2O_7$) | No |
| E. Contains heavy metal or toxic elements (e.g., lead, cadmium, chromium) | No |
| F. Material evolves or generates harmful or explosive gas | No |

NOTE: A "yes" answer in IV indicates a potential safety problem; however, this does not exclude the chemical from use. Evaluate each identified concern.

Evaluation: A, B. Contact possible under accident or emergency conditions. Engineered and administrative barriers in effect to preclude same.

TABLE A-1. (Sheet 42 of 66)

V. Criticality Concerns (Answer "yes" or "no")

| | | |
|---|---|---|
| A. | Substance will alter water moderation | No |
| B. | Substance will interfere with solid nuclear poison | No |
| C. | Substance will interfere with soluble nuclear poison | No |
| D. | Substance will interfere with laboratory detection of nuclear poison | No |

NOTE: A "yes" answer in V disqualifies a chemical from use until a comprehensive safety evaluation is completed.

TABLE A-1. (Sheet 43 of 66)

CHEMICAL EVALUATION CHECKLIST

I. Chemical Identification and Intended Use Sodium nitrite $NaNO_2$ - 50 lb bags

II. Industrial Safety (Refer to instruction; Rate 0, 1, 2, 3, or 4)

A. Toxicity Rating 2 (Table 3)

B. Flammability Rating 2 (Table 4)

C. Reactivity (Stability) Rating 1 (Table 5)

D. Special Categories (Answer "yes" or "no")

1) Reacts with $H_2O$ No (Table 6)

2) Oxidizer No (Table 7)

3) Limited shelf-life/ No (Table 8)

Peroxidizable No (Table 8)

NOTE: A single rating of 3 or 4 or a "yes" in II requires further evaluation.

Evaluation:

III. Material Compatibility (indicate which materials the chemical is likely to contact and its chemical compatibility: S = satisfactory, L = limited use, and U = unsatisfactory)

| | Contact | Compatible |
|---|---|---|
| A. Stainless steel - 304, 316, etc. | Yes | S |
| B. Carbon steel | | |
| C. Other metals ( ) | | |
| D. Plastics | | |

TABLE A-1. (Sheet 44 of 66)

| | Contact | Compatible |
|---|---|---|
| E. Elastomers | | |
| F. Concrete | Yes | S |
| G. Protective clothing | Yes | S |

NOTE: A chemical must be compatible with all materials contacted. Discuss limited compatibility or special precautions here:

IV. Safety Concerns (Answer "yes" or "no")

| | |
|---|---|
| A. Personal contact possible | Yes |
| B. PH ← 5.0 or → 9.0 | No |
| C. Contains peroxides (particularly $H_2O_2$) | No |
| D. Contains oxidizing agents (e.g., $KMnO_4$, $K_2Cr_2O_7$) | No |
| E. Contains heavy metal or toxic elements (e.g., lead, cadmium, chromium) | No |
| F. Material evolves or generates harmful or explosive gas | No |

NOTE: A "yes" answer in IV indicates a potential safety problem; however, this does not exclude the chemical from use. Evaluate each identified concern.

Evaluation: A. Not particularly harmful. Should be washed off after contact.



9 3 1 2 8 9 9 2 4 8 3

TABLE A-1. (Sheet 45 of 66)

V. Criticality Concerns (Answer "yes" or "no")

| | | |
|---|---|---|
| A. | Substance will alter water moderation | No |
| B. | Substance will interfere with solid nuclear poison | No |
| C. | Substance will interfere with soluble nuclear poison | No |
| D. | Substance will interfere with laboratory detection of nuclear poison | No |

NOTE: A "yes" answer in V disqualifies a chemical from use until a comprehensive safety evaluation is completed.

TABLE A-1. (Sheet 46 of 66)

CHEMICAL EVALUATION CHECKLIST

I. Chemical Identification and Intended Use Sodium sulfate $Na_2SO_4$ - 50 lb bags - precipitant in strontium process

II. Industrial Safety (Refer to instruction; Rate 0, 1, 2, 3, or 4)

A. Toxicity Rating 1 (Table 3)

B. Flammability Rating 0 (Table 4)

C. Reactivity (Stability) Rating 0 (Table 5)

D. Special Categories (Answer "yes" or "no")

1) Reacts with $H_2O$ No (Table 6)

2) Oxidizer No (Table 7)

3) Limited shelf-life/ No (Table 8)

Peroxidizable No (Table 8)

NOTE: A single rating of 3 or 4 or a "yes" in II requires further evaluation.

Evaluation:

III. Material Compatibility (indicate which materials the chemical is likely to contact and its chemical compatibility: S = satisfactory, L = limited use, and U = unsatisfactory)

| | Contact | Compatible |
|---|---|---|
| A. Stainless steel - 304, 316, etc. | Yes | S |
| B. Carbon steel | | |
| C. Other metals ( ) | | |
| D. Plastics | | |



9 3 1 2 8 9 9 2 1 4 8 5

TABLE A-1. (Sheet 47 of 66)

| | Contact | Compatible |
|---|---|---|
| E. Elastomers | | |
| F. Concrete | Yes | S |
| G. Protective clothing | Yes | S |

NOTE: A chemical must be compatible with all materials contacted. Discuss limited compatibility or special precautions here:

IV. Safety Concerns (Answer "yes" or "no")

| | |
|---|---|
| A. Personal contact possible | Yes |
| B. PH ← 5.0 or → 9.0 | No |
| C. Contains peroxides (particularly $H_2O_2$) | No |
| D. Contains oxidizing agents (e.g., $KMnO_4$, $K_2Cr_2O_7$) | No |
| E. Contains heavy metal or toxic elements (e.g., lead, cadmium, chromium) | No |
| F. Material evolves or generates harmful or explosive gas | No |

NOTE: A "yes" answer in IV indicates a potential safety problem; however, this does not exclude the chemical from use. Evaluate each identified concern.

Evaluation: A. Not particularly harmful. Should be washed off after contact.

TABLE A-1. (Sheet 48 of 66)

V. Criticality Concerns (Answer "yes" or "no")

| | | |
|---|---|---|
| A. | Substance will alter water moderation | No |
| B. | Substance will interfere with solid nuclear poison | No |
| C. | Substance will interfere with soluble nuclear poison | No |
| D. | Substance will interfere with laboratory detection of nuclear poison | No |

NOTE: A "yes" answer in V disqualifies a chemical from use until a comprehensive safety evaluation is completed.

TABLE A-1. (Sheet 49 of 66)

CHEMICAL EVALUATION CHECKLIST

I. Chemical Identification and Intended Use Sulfuric acid 92 wt% - $H_2SO_4$ - bulk storage in outside tank - demineralized water system regeneration

II. Industrial Safety (Refer to instruction; Rate 0, 1, 2, 3, or 4)

A. Toxicity Rating 3 (Table 2)

B. Flammability Rating 0 (Table 4)

C. Reactivity (Stability) Rating 3 (Table 5)

D. Special Categories (Answer "yes" or "no")

1) Reacts with $H_2O$ Yes (Table 6)

2) Oxidizer No (Table 7)

3) Limited shelf-life/ No (Table 8)

Peroxidizable No (Table 8)

NOTE: A single rating of 3 or 4 or a "yes" in II requires further evaluation.

Evaluation: A, C. Carefully handled under existing engineered and administrative barriers. C. Will react violently with water, with rapid generation of heat if not carefully handled.

III. Material Compatibility (indicate which materials the chemical is likely to contact and its chemical compatibility: S = satisfactory, L = limited use, and U = unsatisfactory)

| | Contact | Compatible |
|---|---|---|
| A. Stainless steel - 304, 316, etc. | Yes | S |
| B. Carbon steel | Yes | S |
| C. Other metals ( ) | | |
| D. Plastics | | |

TABLE A-1. (Sheet 50 of 66)

| | Contact | Compatible |
|---|---|---|
| E. Elastomers | | |
| F. Concrete | Yes | U |
| G. Protective clothing | Yes | U |

NOTE: A chemical must be compatible with all materials contacted. Discuss limited compatibility or special precautions here:

F, G. Contact only under accident or emergency conditions. Will react with concrete and most types of fabric. Carefully handled under existing engineered and administrative barriers.

IV. Safety Concerns (Answer "yes" or "no")

| | |
|---|---|
| A. Personal contact possible | Yes |
| B. PH ← 5.0 or → 9.0 | Yes |
| C. Contains peroxides (particularly $H_2O_2$) | No |
| D. Contains oxidizing agents (e.g., $KMnO_4$, $K_2Cr_2O_7$) | No |
| E. Contains heavy metal or toxic elements (e.g., lead, cadmium, chromium) | No |
| F. Material evolves or generates harmful or explosive gas | No |

NOTE: A "yes" answer in IV indicates a potential safety problem; however, this does not exclude the chemical from use. Evaluate each identified concern.

Evaluation: A, B. Only under accident or emergency conditions. Carefully handled per existing engineered and administrative barriers.



9312892489

TABLE A-1. (Sheet 51 of 66)

V. Criticality Concerns (Answer "yes" or "no")

| | | |
|---|---|---|
| A. | Substance will alter water moderation | No |
| B. | Substance will interfere with solid nuclear poison | No |
| C. | Substance will interfere with soluble nuclear poison | No |
| D. | Substance will interfere with laboratory detection of nuclear poison | No |

NOTE: A "yes" answer in V disqualifies a chemical from use until a comprehensive safety evaluation is completed.

TABLE A-1. (Sheet 52 of 66)

CHEMICAL EVALUATION CHECKLIST

I. Chemical Identification and Intended Use Tetrasodium EDTA 38 wt% - bulk storage in outside tank - complexant for various impurity removal

II. Industrial Safety (Refer to instruction; Rate 0, 1, 2, 3, or 4)

A. Toxicity Rating 2 (Table 3)

B. Flammability Rating 0 (Table 4)

C. Reactivity (Stability) Rating 0 (Table 5)

D. Special Categories (Answer "yes" or "no")

1) Reacts with $H_2O$ No (Table 6)

2) Oxidizer No (Table 7)

3) Limited shelf-life/ No (Table 8)

Peroxidizable No (Table 8)

NOTE: A single rating of 3 or 4 or a "yes" in II requires further evaluation.

Evaluation: A, C. Carefully handled under existing engineered and administrative barriers. C. Will react violently with water, with rapid generation of heat if not carefully handled.

III. Material Compatibility (indicate which materials the chemical is likely to contact and its chemical compatibility: S = satisfactory, L = limited use, and U = unsatisfactory)

| | Contact | Compatible |
|---|---|---|
| A. Stainless steel - 304, 316, etc. | Yes | S |
| B. Carbon steel | | |
| C. Other metals ( ) | | |
| D. Plastics | | |

TABLE A-1. (Sheet 53 of 66)

| | Contact | Compatible |
|---|---|---|
| E. Elastomers | | |
| F. Concrete | Yes | S |
| G. Protective clothing | Yes | S |

NOTE: A chemical must be compatible with all materials contacted. Discuss limited compatibility or special precautions here:

IV. Safety Concerns (Answer "yes" or "no")

| | |
|---|---|
| A. Personal contact possible | Yes |
| B. PH ← 5.0 or → 9.0 | Yes |
| C. Contains peroxides (particularly $H_2O_2$) | No |
| D. Contains oxidizing agents (e.g., $KMnO_4$, $K_2Cr_2O_7$) | No |
| E. Contains heavy metal or toxic elements (e.g., lead, cadmium, chromium) | No |
| F. Material evolves or generates harmful or explosive gas | No |

NOTE: A "yes" answer in IV indicates a potential safety problem; however, this does not exclude the chemical from use. Evaluate each identified concern.

Evaluation: A, B. Material is strongly alkaline and can produce caustic burns. Administrative controls and engineered barriers are in effect to prevent personal contact, or to minimize effects if such occurs.

9312899224 92

TABLE A-1. (Sheet 54 of 66)

V. Criticality Concerns (Answer "yes" or "no")

| | | |
|---|---|---|
| A. | Substance will alter water moderation | No |
| B. | Substance will interfere with solid nuclear poison | No |
| C. | Substance will interfere with soluble nuclear poison | No |
| D. | Substance will interfere with laboratory detection of nuclear poison | No |

NOTE: A "yes" answer in V disqualifies a chemical from use until a comprehensive safety evaluation is completed.

TABLE A-1. (Sheet 55 of 66)

CHEMICAL EVALUATION CHECKLIST

I. Chemical Identification and Intended Use Tributyl phosphate (TBP) $(CH_3CH_2CH_2CH_2O)_3PO$ - bulk storage in outside tank - extractant in strontium processing

II. Industrial Safety (Refer to instruction; Rate 0, 1, 2, 3, or 4)

A. Toxicity Rating 3 (Table 2)

B. Flammability Rating 1 (Table 4)

C. Reactivity (Stability) Rating 0 (Table 5)

D. Special Categories (Answer "yes" or "no")

1) Reacts with $H_2O$ No (Table 6)

2) Oxidizer No (Table 7)

3) Limited shelf-life/ No (Table 8)

Peroxidizable No (Table 8)

NOTE: A single rating of 3 or 4 or a "yes" in II requires further evaluation.

Evaluation: A. Inhalation - severe, mucous membrane and upper respiratory tract; may cause pulmonary edema. Ingestion - headache, nausea, weakness, muscle twitching. Skin and eye - dermatitis irritation, eye burns, severe discomfort.

III. Material Compatibility (indicate which materials the chemical is likely to contact and its chemical compatibility: S = satisfactory, L = limited use, and U = unsatisfactory)

| | Contact | Compatible |
|---|---|---|
| A. Stainless steel - 304, 316, etc. | Yes | S |
| B. Carbon steel | Yes | S |
| C. Other metals ( ) | | |
| D. Plastics | | |

TABLE A-1. (Sheet 56 of 66)

| | Contact | Compatible |
|---|---|---|
| E. Elastomers | | |
| F. Concrete | Yes | S |
| G. Protective clothing | Yes | L |

NOTE: A chemical must be compatible with all materials contacted. Discuss limited compatibility or special precautions here:

F, G. Only under accident conditions. Carefully handled under existing engineered and administrative barriers to preclude same.

G. May not be compatible with certain types of protective clothing under certain conditions.

IV. Safety Concerns (Answer "yes" or "no")

| | |
|---|---|
| A. Personal contact possible | Yes |
| B. PH ← 5.0 or → 9.0 | No |
| C. Contains peroxides (particularly $H_2O_2$) | No |
| D. Contains oxidizing agents (e.g., $KMnO_4$, $K_2Cr_2O_7$) | No |
| E. Contains heavy metal or toxic elements (e.g., lead, cadmium, chromium) | No |
| F. Material evolves or generates harmful or explosive gas | No |

NOTE: A "yes" answer in IV indicates a potential safety problem; however, this does not exclude the chemical from use. Evaluate each identified concern.

Evaluation: A. Only under accident or emergency conditions. Carefully handled per existing engineered and administrative barriers.



9 3 1 2 8 9 9 2 4 9 5

TABLE A-1. (Sheet 57 of 66)

V. Criticality Concerns (Answer "yes" or "no")

A. Substance will alter water moderation ___No___

B. Substance will interfere with solid nuclear poison ___No___

C. Substance will interfere with soluble nuclear poison ___No___

D. Substance will interfere with laboratory detection of nuclear poison ___No___

NOTE: A "yes" answer in V disqualifies a chemical from use until a comprehensive safety evaluation is completed.

TABLE A-1. (Sheet 58 of 66)

CHEMICAL EVALUATION CHECKLIST

I. Chemical Identification and Intended Use Trichloroethane $Cl_2CHCH_2Cl$
55 gal drums - degreaser and cleaner

II. Industrial Safety (Refer to instruction; Rate 0, 1, 2, 3, or 4)

A. Toxicity Rating 0 (Table 2)

B. Flammability Rating 0 (Table 4)

C. Reactivity (Stability) Rating 1 (Table 5)

D. Special Categories (Answer "yes" or "no")

1) Reacts with $H_2O$ No (Table 6)

2) Oxidizer No (Table 7)

3) Limited shelf-life/ No (Table 8)

Peroxidizable No (Table 8)

NOTE: A single rating of 3 or 4 or a "yes" in II requires further evaluation.

Evaluation:

III. Material Compatibility (indicate which materials the chemical is likely to contact and its chemical compatibility: S = satisfactory, L = limited use, and U = unsatisfactory)

| | Contact | Compatible |
|---|---|---|
| A. Stainless steel - 304, 316, etc. | Yes | S |
| B. Carbon steel | | |
| C. Other metals ( ) | | |
| D. Plastics | Yes | S |



9 3 1 1 2 8 9 9 2 1 4 9 7

TABLE A-1. (Sheet 59 of 66)

| | Contact | Compatible |
|---|---|---|
| E. Elastomers | | |
| F. Concrete | Yes | S |
| G. Protective clothing | Yes | S |

NOTE: A chemical must be compatible with all materials contacted. Discuss limited compatibility or special precautions here:

IV. Safety Concerns (Answer "yes" or "no")

| | |
|---|---|
| A. Personal contact possible | Yes |
| B. PH ← 5.0 or → 9.0 | No |
| C. Contains peroxides (particularly $H_2O_2$) | No |
| D. Contains oxidizing agents (e.g., $KMnO_4$, $K_2Cr_2O_7$) | No |
| E. Contains heavy metal or toxic elements (e.g., lead, cadmium, chromium) | No |
| F. Material evolves or generates harmful or explosive gas | No |

NOTE: A "yes" answer in IV indicates a potential safety problem; however, this does not exclude the chemical from use. Evaluate each identified concern.

Evaluation: A. Only under accident or emergency conditions.

Should be washed off immediately upon contact.

TABLE A-1. (Sheet 60 of 66)

V. Criticality Concerns (Answer "yes" or "no")

A. Substance will alter water moderation ___No___

B. Substance will interfere with solid nuclear poison ___No___

C. Substance will interfere with soluble nuclear poison ___No___

D. Substance will interfere with laboratory detection of nuclear poison ___No___

NOTE: A "yes" answer in V disqualifies a chemical from use until a comprehensive safety evaluation is completed.

TABLE A-1. (Sheet 61 of 66)

CHEMICAL EVALUATION CHECKLIST

I. Chemical Identification and Intended Use Trisodium HEDTA 41 wt% - bulk storage in outside tank - complexant for various impurity removal

II. Industrial Safety (Refer to instruction; Rate 0, 1, 2, 3, or 4)

A. Toxicity Rating 2 (Table 3)

B. Flammability Rating 0 (Table 4)

C. Reactivity (Stability) Rating 0 (Table 5)

D. Special Categories (Answer "yes" or "no")

1) Reacts with $H_2O$ No (Table 6)

2) Oxidizer No (Table 7)

3) Limited shelf-life/ No (Table 8)

Peroxidizable No (Table 8)

NOTE: A single rating of 3 or 4 or a "yes" in II requires further evaluation.

Evaluation: _____

9312899250 0

III. Material Compatibility (indicate which materials the chemical is likely to contact and its chemical compatibility: S = satisfactory, L = limited use, and U = unsatisfactory)

| | Contact | Compatible |
|---|---|---|
| A. Stainless steel - 304, 316, etc. | Yes | S |
| B. Carbon steel | | |
| C. Other metals ( ) | | |
| D. Plastics | | |

TABLE A-1. (Sheet 62 of 66)

| | Contact | Compatible |
|---|---|---|
| E. Elastomers | | |
| F. Concrete | Yes | S |
| G. Protective clothing | Yes | S |

NOTE: A chemical must be compatible with all materials contacted. Discuss limited compatibility or special precautions here:

IV. Safety Concerns (Answer "yes" or "no")

| | |
|---|---|
| A. Personal contact possible | Yes |
| B. PH ← 5.0 or → 9.0 | Yes |
| C. Contains peroxides (particularly $H_2O_2$) | No |
| D. Contains oxidizing agents (e.g., $KMnO_4$, $K_2Cr_2O_7$) | No |
| E. Contains heavy metal or toxic elements (e.g., lead, cadmium, chromium) | No |
| F. Material evolves or generates harmful or explosive gas | No |

NOTE: A "yes" answer in IV indicates a potential safety problem; however, this does not exclude the chemical from use. Evaluate each identified concern.

Evaluation: A, B. Material is strongly alkaline and can produce caustic burns. Administrative controls and engineered barriers are in effect to prevent personal contact, or to minimize effects if such occurs.



9312899250 1

TABLE A-1. (Sheet 63 of 66)

V. Criticality Concerns (Answer "yes" or "no")

| | | |
|---|---|---|
| A. | Substance will alter water moderation | No |
| B. | Substance will interfere with solid nuclear poison | No |
| C. | Substance will interfere with soluble nuclear poison | No |
| D. | Substance will interfere with laboratory detection of nuclear poison | No |

NOTE: A "yes" answer in V disqualifies a chemical from use until a comprehensive safety evaluation is completed.

TABLE A-1. (Sheet 64 of 66)

CHEMICAL EVALUATION CHECKLIST

I. Chemical Identification and Intended Use Zeolon 900 ion exchange resin - stored in General Stores - cesium recovery in cell 38

II. Industrial Safety (Refer to instruction; Rate 0, 1, 2, 3, or 4)

A. Toxicity Rating NA*

B. Flammability Rating 0 (Table 4)

C. Reactivity (Stability) Rating 0 (Table 5)

D. Special Categories (Answer "yes" or "no")

1) Reacts with $H_2O$ No (Table 6)

2) Oxidizer No (Table 7)

3) Limited shelf-life/ No (Table 8)

Peroxidizable No (Table 8)

*NA - Not Available

NOTE: A single rating of 3 or 4 or a "yes" in II requires further evaluation.

Evaluation:

III. Material Compatibility (indicate which materials the chemical is likely to contact and its chemical compatibility: S = satisfactory, L = limited use, and U = unsatisfactory)

| | Contact | Compatible |
|---|---|---|
| A. Stainless steel - 304, 316, etc. | Yes | S |
| B. Carbon steel | | |
| C. Other metals ( ) | | |
| D. Plastics | | |



9 3 1 2 8 9 9 2 5 0 3

TABLE A-1. (Sheet 65 of 66)

| | Contact | Compatible |
|---|---|---|
| E. Elastomers | | |
| F. Concrete | Yes | S |
| G. Protective clothing | Yes | S |

NOTE: A chemical must be compatible with all materials contacted. Discuss limited compatibility or special precautions here:

IV. Safety Concerns (Answer "yes" or "no")

| | |
|---|---|
| A. Personal contact possible | Yes |
| B. PH ← 5.0 or → 9.0 | No |
| C. Contains peroxides (particularly $H_2O_2$) | No |
| D. Contains oxidizing agents (e.g., $KMnO_4$, $K_2Cr_2O_7$) | No |
| E. Contains heavy metal or toxic elements (e.g., lead, cadmium, chromium) | No |
| F. Material evolves or generates harmful or explosive gas | No |

NOTE: A "yes" answer in IV indicates a potential safety problem; however, this does not exclude the chemical from use. Evaluate each identified concern.

Evaluation: A. Not particularly harmful.

TABLE A-1. (Sheet 66 of 66)

V. Criticality Concerns (Answer "yes" or "no")

| | | |
|---|---|---|
| A. | Substance will alter water moderation | No |
| B. | Substance will interfere with solid nuclear poison | No |
| C. | Substance will interfere with soluble nuclear poison | No |
| D. | Substance will interfere with laboratory detection of nuclear poison | No |

NOTE: A "yes" answer in V disqualifies a chemical from use until a comprehensive safety evaluation is completed.

TABLE A-2. Health Hazard Level Determined from TLV.

| Hazard level | Commonly used term | TLY | |
|---|---|---|---|
| | | ppm* | mg/m³** |
| 4 | Extremely toxic | ≤ 10 | ≤ 0.25 |
| 3 | Highly toxic | 11 to 250 | 0.26 to 2.5 |
| 2 | Moderately toxic | 251 to 500 | 2.51 to 5.0 |
| 1 | Slightly toxic or practically nontoxic | 501 to 1,000 | 5.1 to 10 |
| 0 | Relatively harmless | > 1,000 | > 10 |

*Parts of contaminant per million parts of air/contaminant mixture.

**Milligrams of contaminant per cubic meter of air.

Sources:

1. Bolton, N. E., et al., "Report ORNL/TM-5721," Oak Ridge, TN, Oak Ridge National Laboratory, May 1977.

2. Union Carbide Nuclear Division, "Health and Safety Procedure 70-202," Oak Ridge, TN, 1978.

TABLE A-3. Hazard Level Determined from Relative Toxicity Criteria.

| Hazard level | Commonly used term | Simple oral dose (rats) mg/kg | Inhalation 4-hr vapor exposure (rats) mortality of 2/6 to 4/6 ppm | $LD_{50}$* skin (rabbits) mg/kg |
|---|---|---|---|---|
| 4 | Extremely toxic | ≤1 | ≤10 | ≤5 |
| 3 | Highly toxic | 1.1 to 50 | 11 to 100 | 5.1 to 43 |
| 2 | Moderately toxic | 50.1 to 500 | 101 to 1,000 | 44 to 340 |
| 1 | Slightly toxic or practically nontoxic | 501 to 15,000 | 1,001 to 100,000 | 350 to 22,600 |
| 0 | Relatively harmless | >15,000 | >100,000 | >22,600 |

*That dosage of a substance that is lethal to 50% of a population of test animals.

Source:

U.S. Department of Health and Human Resources, NIOSH, "Registry of Toxic Effects of Chemical Substances," Publication No. 80-111, Vol. 1 and 80-111, Vol. 2, 1979.

9 3 1 2 8 9 9 2 5 0 7

TABLE A-4. Flammability of Materials.

| Hazard level | Ignition potential |
|---|---|
| 4 | Very flammable gases, very volatile flammable liquids, and materials that will readily disperse in air and burn readily. This hazard level includes very flammable gases or very volatile flammable liquids with flash points below 22.8°C and boiling points below 37.8°C. (NFPA Class 1A) |
| 3 | Liquids that can be ignited under almost all normal temperature conditions. Solids that form coarse dusts, solids in shredded or fibrous form that create flash fires, solids that burn rapidly, and any material that ignites spontaneously at normal temperatures in air. This hazard level includes flammable liquids with flash points below 22.8°C and having a boiling point at or above 37.8°C. (NFPA Class 1B and 1C flammable liquids) |
| 2 | Materials that must be moderately heated or exposed to relatively high ambient temperatures before ignition can occur. This hazard level includes liquids having a flash point above 37.8°C but not exceeding 94°C. |
| 1 | Materials that must be preheated before ignition can occur. Most combustible solids fall into this flammability hazard level. This includes solids, liquids, and semisolids having a flash point above 94°C. |
| 0 | Materials that will not burn. This hazard level should include any material that will not burn in air when exposed to a temperature of 816°C for a period of five minutes. |

TABLE A-5. Reactivity (Stability) of Materials.

| Hazard level | Potential for energy release |
|---|---|
| 4 | Materials that in themselves are readily capable of detonation or of explosive decomposition or explosive reaction at normal temperatures and pressures. Includes materials that are sensitive to mechanical or localized thermal shock. |
| 3 | Materials that in themselves are capable of detonation or of explosive decomposition or of explosive reaction but that require a strong initiating source or that must be heated under confinement before initiation. Includes materials that are sensitive to thermal or mechanical shock at elevated temperatures and pressures or that react explosively with water without requiring heat or confinement. |
| 2 | Materials that in themselves are normally unstable and readily undergo violent chemical change but do not detonate. Includes materials that can undergo chemical change with rapid release of energy at normal temperatures and pressures or that can undergo violent chemical change at elevated temperatures and pressures. Also includes those materials that may react violently with water or that may form potentially explosive mixtures with water. |
| 1 | Materials that in themselves are normally stable but that may become unstable at elevated temperatures and pressure or that may react with water with some releases of energy but not violently. |
| 0 | Materials that are normally stable even under fire exposure conditions and that are not reactive with water. |

9 3 1 2 8 0 9 2 5 0 9

TABLE A-6. Selected Materials that React Violently with Water.

| |
|---|
| Calcium carbide |
| Calcium metal |
| Chlorosulfonic acid |
| Lithium hydride |
| Magnesium metal (powder or shavings) |
| Sodium metal |
| Sodium-potassium alloys (NaK) |

TABLE A-7. Selected Groups of Materials that are Oxidizers.

| | | | |
|---|---|---|---|
| Bromates<br>Bromine<br>Chlorates | Chlorine<br>Fluorine | Nitrates<br>Nitric acid<br>Perchlorates | Permanganates<br>Peroxides<br>HTH* |

*HTH - High Test Hypochlorite (calcium hypochlorite).

TABLE A-8. Selected Peroxidizable Materials.

| Group 1 Peroxidizables (safe for 3 months) | Group 2 Peroxidizables (safe for 12 months) |
|---|---|
| Divinyl acetylene | Acetal |
| Isopropyl ether | Butadiene |
| Potassium metal | Chloroprene |
| Sodium amide | Chlorotrifluoroethylene |
| Sodium-potassium alloy (NaK) | Cumeme |
| Vinylidene chloride | Cyclohexene |
| | Diacetylene |
| | Dicyclopentadiene |
| | Dioxane |
| | Ethyl ether |
| | Ethylene glycol dimethyl ether |
| | Methyl acetylene |
| | Methylcyclopentane |
| | Methyl-iso-butyl ketone |
| | Styrene |
| | Tetrafluoroethylene |
| | Tetrahydrofuran |
| | Tetrahydronaphthalene |
| | Vinyl acetate |
| | Vinyl acetylene |
| | Vinyl chloride |
| | Vinyl ethers |
| | Vinly pyridine |

TABLE A-9. Examples of EPA Spill Hazard Classifications.

| Chemical | Category | Quantity, lb (kg) |
|---|---|---|
| Acetic acid | C | 1,000 (454.0) |
| Aluminum sulfate | D | 5,000 (2,270.0) |
| Ammonia | B | 100 (45.4) |
| Ammonium citrate | D | 5,000 (2,270.0) |
| Ammonium hydroxide | C | 1,000 (454.0) |
| EDTA | D | 5,000 (2,270.0) |
| Ferric sulfate | C | 1,000 (454.0) |
| Formaldehyde | C | 1,000 (454.0) |
| Hydrofluoric acid | D | 5,000 (2,270.0) |
| Nitric acid | C | 1,000 (454.0) |
| Phosphoric acid | D | 5,000 (2,270.0) |
| Potassium permanganate | B | 100 (45.4) |
| Sdoium dodecylbenzenesulfonate | C | 1,000 (454.0) |
| Sodium hydroxide | C | 1,000 (454.0) |
| Sodium hypochlorite | B | 100 (45.4) |
| Sodium nitrite | B | 100 (45.4) |
| Sulfuric acid | C | 1,000 (454.0) |
| Toluene | C | 1,000 (454.0) |
| Xylene | C | 1,000 (454.0) |

*49 CFR Part 117 (1982).

9 3 1 2 8 9 9 2 5 1 2

This Page Intentionally Left Blank.

9 3 1 2 8 9 9 2 5 1 3