STAR

00017459

WHC-EP-0470

Facility Effluent Monitoring Plan for the Uranium Trioxide Facility

BEST AVAILABLE COPY

NOV 1991
RECEIVED
EDMC

Prepared for the U.S. Department of Energy
Office of Environmental Restoration
and Waste Management

Westinghouse
Hanford Company Richland, Washington

Hanford Operations and Engineering Contractor for the
U.S. Department of Energy under Contract DE-AC06-87RL10930

Approved for Public Release

9 1 1 2 1 0 5 1 9 7 8

LEGAL DISCLAIMER

This report was prepared as an account of work sponsored by an agency of the United States Government. Neither the United States Government nor any agency thereof, nor any of their employees, nor any of their contractors, subcontractors or their employees, makes any warranty, express or implied, or assumes any legal liability or responsibility for the accuracy, completeness, or any third party's use or the results of such use of any information, apparatus, product, or process disclosed, or represents that its use would not infringe privately owned rights. Reference herein to any specific commercial product, process, or service by trade name, trademark, manufacturer, or otherwise, does not necessarily constitute or imply its endorsement, recommendation, or favoring by the United States Government or any agency thereof or its contractors or subcontractors. The views and opinions of authors expressed herein do not necessarily state or reflect those of the United States Government or any agency thereof.

This report has been reproduced from the best available copy.
Available in paper copy and microfiche.

Available to the U.S. Department of Energy
and its contractors from
Office of Scientific and Technical Information
P.O. Box 62
Oak Ridge, TN 37831
(615) 576-8401

Available to the public from the U.S. Department of Commerce
National Technical Information Service
5285 Port Royal Road
Springfield, VA 22161
(703) 487-4650

Printed in the United States of America

DISCLM-1.CHP (1-91)

9 1 1 2 1 5 1 9 7 9

WHC-EP-0470

UC-721

Facility Effluent Monitoring Plan for the Uranium Trioxide Facility

R. J. Thompson
Westinghouse Hanford Company

S. Sontag
Los Alamos Technical Associates

Date Published
November 1991

Prepared for the U.S. Department of Energy
Office of Environmental Restoration
and Waste Management

Westinghouse Hanford Company
P.O. Box 1970
Richland, Washington 99352

Hanford Operations and Engineering Contractor for the
U.S. Department of Energy under Contract DE-AC06-87RL10930

Approved for Public Release

Document Title: Facility Effluent Monitoring Plan for the Uranium Trioxide Facility

Prepared by:

R. J. Thompson
R. J. Thompson, Manager
Engineering Systems
Technology

11/6/91
Date

Approved by:

J. E. Cottrell
J. E. Cottrell, Manager
UO_3 Facility

11/6/91
Date

W. G. Ruff
W. G. Ruff, Acting Director
Facility Operations

11-6-91
Date

FACILITY EFFLUENT MONITORING PLAN FOR THE URANIUM TRIOXIDE FACILITY

R. J. Thompson

ABSTRACT

A facility effluent monitoring plan is required by the U.S. Department of Energy in DOE Order 5400.1 for any operations that involve hazardous materials and radioactive substances that could impact employee or public safety or the environment. This document is prepared using the specific guidelines identified in* A Guide for Preparing Hanford Site Facility Effluent Monitoring Plans, WHC-EP-0438**. *This facility effluent monitoring plan assesses effluent monitoring systems and evaluates whether they are adequate to ensure the public health and safety as specified in applicable federal, state, and local requirements.*

This facility effluent monitoring plan is the first annual report. It shall ensure long-range integrity of the effluent monitoring systems by requiring an update whenever a new process or operation introduces new hazardous materials or significant radioactive materials. This document must be reviewed annually even if there are no operational changes, and it must be updated as a minimum every three years.

---

*General Environmental Protection Program, *DOE Order 5400.1, U.S. Department of Energy, Washington, D.C., 1988.*

**A Guide for Preparing Hanford Site Facility Effluent Monitoring Plans, *WHC-EP-0438, Westinghouse Hanford Company, Richland, Washington, 1991.*

This page intentionally left blank.

9 1 1 2 3 5 1 9 8 3

CONTENTS

1.0 INTRODUCTION 1-1
1.1 POLICY 1-1
1.2 PURPOSE 1-1
1.3 SCOPE 1-2
1.4 DISCUSSION 1-3

2.0 FACILITY DESCRIPTION 2-1
2.1 BRIEF FACILITY PHYSICAL DESCRIPTION 2-1
2.1.1 UO_3 Plant Process Facilities 2-1
2.1.2 Process Condensate Handling Facilities 2-6
2.2 BRIEF PROCESS DESCRIPTION 2-6
2.3 IDENTIFICATION AND CHARACTERIZATION OF POTENTIAL SOURCE TERMS 2-7
2.3.1 Gaseous Effluents 2-7
2.3.2 UO_3 Liquid Emissions 2-10

3.0 APPLICABLE REGULATIONS 3-1
3.1 U.S. DEPARTMENT OF ENERGY ORDERS 3-1
3.1.1 U.S Department of Energy Order 5400.1 3-1
3.1.2 U.S. Department of Energy Order 5400.5 3-1
3.2 FEDERAL 3-1
3.2.1 Environmental Protection Agency Regulations on National Emission Standards for Hazardous Air Pollutants, Title 40 Code of Federal Regulations, Part 61 3-1
3.2.2 Reportable Quantities, Title 40, Code of Federal Regulations, Part 302 3-4
3.3 STATE 3-5
3.3.1 Washington State Ambient Air Quality Standard and Emission Limits for Radionuclides 3-5
3.3.2 Groundwater Protection 3-5
3.3.3 Dangerous Waste Regulations WAC 173-303 3-5
3.4 LOCAL 3-5
3.4.1 Benton-Franklin-Walla Walla Counties Air Pollution Control Authority 3-5

4.0 IDENTIFICATION AND CHARACTERIZATION OF EFFLUENT STREAMS 4-1
4.1 IDENTIFICATION AND CHARACTERIZATION OF SOURCE TERMS CONTRIBUTING TO EACH AIR EFFLUENT STREAM 4-1
4.1.1 Discharge Descriptions 4-1
4.1.2 Routine Operating Conditions 4-2
4.1.3 Upset Operating Conditions 4-2
4.1.4 Dispersion Modeling 4-3
4.2 IDENTIFICATION AND CHARACTERIZATION OF SOURCE TERMS CONTRIBUTING TO EACH WATER EFFLUENT STREAM 4-12
4.2.1 Discharge Descriptions 4-12
4.2.2 Routine Operating Conditions 4-12
4.2.3 Upset Operating Conditions 4-18
4.2.4 Liquid Effluent Criteria 4-20

CONTENTS (continued)

5.0 EFFLUENT POINT OF DISCHARGE DESCRIPTION 5-1
5.1 AIR EFFLUENTS 5-1
5.2 WATER EFFLUENTS 5-1

6.0 EFFLUENT MONITORING/SAMPLING SYSTEM DESIGN CRITERIA 6-1
6.1 NEW FACILITIES 6-1
6.2 EXISTING FACILITIES 6-1
6.2.1 Air Effluent Design Criteria 6-1
6.2.2 Water Effluent Design Criteria 6-1

7.0 CHARACTERIZATION OF CURRENT EFFLUENT MONITORING SYSTEM 7-1
7.1 AIR EFFLUENT MONITORING SYSTEM DESCRIPTION AND SPECIFICATIONS 7-1
7.1.1 296-U-4 Stack 7-1
7.1.2 296-U-Stack 7-3
7.1.3 296-U-13 Stack 7-4
7.1.4 Air Effluent Monitoring Program 7-6
7.1.5 Air Effluent Sampling Program 7-6
7.2 LIQUID EFFLUENTS 7-6
7.2.1 Monitoring/Sampling Requirements 7-6
7.2.2 Process Condensate Effluent Monitoring/Sampling System 7-11
7.2.3 Wastewater Effluent Monitoring/Sampling System 7-11

8.0 HISTORICAL MONITORING/SAMPLING DATA FOR EFFLUENT STREAMS 8-1
8.1 AIR EFFLUENTS 8-1
8.1.1 Normal Conditions 8-1
8.1.2 Upset Conditions 8-1
8.2 WATER EFFLUENTS 8-1
8.2.1 Normal Conditions 8-1
8.2.2 Upset Conditions 8-2

9.0 SAMPLE ANALYSIS 9.1
9.1 ANALYTICAL LABORATORY AND PROCEDURES 9-1
9.2 SAMPLE AND DATA CHAIN OF CUSTODY 9-2
9.2.1 U.S. Department of Energy Analytical and Laboratory Guidelines 9-3

10.0 NOTIFICATION AND REPORTING REQUIREMENTS 10-1
10.1 FEDERAL REQUIREMENTS 10-1
10.1.1 Resource Conservation and Recovery Act of 1976 10-1
10.1.2 Comprehensive Environmental Response, Compensation, and Liability Act of 1980 10-1
10.1.3 National Emission Standards for Hazardous Air Pollutants 10-1
10.2 STATE REQUIREMENTS 10-2
10.2.1 Generator Reporting 10-2
10.2.2 Facility Reporting 10-2

CONTENTS (continued)

10.3 U.S. DEPARTMENT OF ENERGY REQUIREMENTS 10-2
10.3.1 U.S. Department of Energy Order 5400.1, Chapter II General Environmental Protection Program - Notification and Reports 10-2
10.3.2 U.S. Department of Energy Order 5484.1, Environmental Protection, Safety and Health Protection Information Reporting Requirements 10-3
10.3.3 U.S. Department of Energy Order 5000.3A, Occurrence Reporting and Processing of Operations Information 10-3

11.0 INTERFACE WITH THE OPERATIONAL ENVIRONMENTAL SURVEILLANCE PROGRAM 11-1
11.1 DESCRIPTION 11-1
11.2 PURPOSE 11-1
11.3 BASIS 11-1
11.4 MEDIA SAMPLED AND ANALYSES PERFORMED 11-2
11.5 LOCATIONS 11-2
11.6 PROGRAM REVIEW 11-2
11.7 SAMPLER DESIGN 11-3
11.8 COMMUNICATION 11-3
11.9 REPORTS 11-3

12.0 QUALITY ASSURANCE 12-1
12.1 PURPOSE 12-1
12.2 OBJECTIVE 12-1
12.3 REQUIREMENTS 12-1
12.4 FACILITY SPECIFIC REQUIREMENTS 12-1

13.0 INTERNAL AND EXTERNAL PLAN REVIEW 13-1

14.0 COMPLIANCE ASSESSMENT 14-1
14.1 COMPLIANCE ASSESSMENT 14-1
14.1.1 Comparison of Instrument Specifications with Required Standards. 14-1
14.1.2 Comparison of Instrument Specifications with Monitoring Criteria 14-1
14.1.3 Comparison of Instrument Specifications with Effluent Characteristics 14-1
14.1.4 Comparison of Projected Effluent Characteristics with Historical Data 14-1
14.1.5 Comparison of Effluent Monitoring Capabilities with Regulatory and Contractor Requirements 14-2
14.2 EXEMPTIONS 14-2
14.3 SYSTEM UPGRADES REQUIRED FOR COMPLIANCE 14-2

CONTENTS (continued)

15.0 SUMMARY AND CONCLUSIONS 15-1

16.0 ATTACHMENTS 16-1
16.1 REFERENCES 16-1
16.2 STATE APPROVED LAND DISPOSAL STRUCTURE ACCEPTANCE CRITERIA 16-5

LIST OF FIGURES

2-1 UO_3 Plant Site Map 2-2

2-2 UO_3 Plant and Ancillary Facilities 2-3

2-3 224-U Building 2-4

2-4 224-UA Building 2-5

2-5 Powder Handling Off-Gas System 2-8

2-6 296-U-4 Contributing Stream 2-9

2-7 Load-Out Hood Exhaust System 2-11

4-1 Contributors to UO_3 Plant Process Condensate 4-17

4-2 UO_3/U Plant Wastewater Routing 4-19

This page intentionally left blank.

9 1 1 2 3 3 5 1 9 8 9

LIST OF TABLES

3-2 Ground Water Quality Criteria 3-6

4-1 UO_3 Stack Exhaust Data 4-1

4-2 UO_3 Radionuclide Emissions from Exhaust Stacks 4-2

4-3 Distances from the UO_3 Facility to the Hanford Site Boundary . . . 4-5

4-4 Summary of UO_3 Wind Data. 4-6

4-5 CHI/Q Values for the 16 Wind Sectors Surrounding UO_3 4-7

4-6 Doses to the Maximally Exposed Individual from Routine Standby Mode Releases 4-9

4-7 Individual Radionuclide Doses to the Maximally Exposed Individual from Routine Standby Mode Releases 4-9

4-8 Doses to the Maximally Exposed Individual from an Unmitigated Release 4-9

4-9 Individual Radionuclide Doses to the Maximally Exposed Individual from an Unmitigated Release 4-10

4-10 Dose to Maximally Exposed Individual During February 1 through 6, 1988 4-11

4-11 Dose to Maximally Exposed Individual During April 17 through 27, 1989 4-11

4-12 Dose to Maximally Exposed Individual During May 8 through 17, 1989 4-11

4-13 Summary of UO_3 Plant Liquid Effluents 4-13

7-1 Bag Filter Differential Pressure Control Settings and Alarm Points 7-4

7-2 Comparison of UO_3/U Plant Effluent Qualities and State Approved Land Disposal Structure Acceptance Criteria. 7-7

9-1 Laboratory Procedures 9-3

16-1 Acceptance Criteria for 200 Area Treated Effluent Disposal Facility 16-6

This page intentionally left blank.

9 1 1 2 1 3 6 5 1 9 9 1

LIST OF TERMS

ANSI	American National Standards Institute
APCA	Air Pollution Control Authority
ASTM	American Society for Testing and Materials
BAT	Best Available Technology
CAM	continuous air monitoring
CERCLA	*Comprehensive Environmental Response, Compensation, and Liability Act of 1980*
CFR	Code of Federal Regulations
CHI/Q	air concentration per unit source release
DCG	derived concentration guide
DOE	U.S. Department of Energy
DP	differential pressure
EDE	effective dose equivalent
Ecology	Washington State Department of Ecology
EMP	environmental monitoring plan
EOC	emergency operations center
EPA	U.S. Environmental Protection Agency
FEMP	Facility Effluent Monitoring Plan
HEPA	high-efficiency particulate air (filter)
HVAC	heating, ventilating, and air conditioning
ICRP	International Commission on Radiation Protection
MCL	maximum concentration level
MEI	maximally exposed individual
M/S	monitoring/sampling
MOU	memorandum of understanding
NESHAP	*National Emission Standards for Hazardous Air Pollutants*
NPDES	National Pollutant Discharge Elimination System
PAO	Public affairs Office
ppb	parts per billion
PNL	Pacific Northwest Laboratory
PSD	Prevention of Significant Deterioration
PUREX	Plutonium-Uranium Extraction (Plant)
QAPP	Quality Assurance Program Plan
RCRA	*Resource Conservation and Recovery Act of 1976*
RL	U.S. Department of Energy, Field Office, Richland
SALDS	State Approved Land Disposal Structure
SDWA	Safe Drinking Water Act
SQA	software quality assurance
TEDF	Treated Effluent Disposal Facility
TLD	thermal luminescent dosimeter
TSD	treatment, storage, and disposal
UNH	uranyl nitrate hexahydrate
UO_3	uranium trioxide
U/UPW	UO_3/U Plant Wastewater
USC	United States Code
WAC	Washington State Administrative Code
Westinghouse Hanford	Westinghouse Hanford Company
WPCA	Water Pollution Control Act

This page intentionally left blank.

9 1 1 2 3 5 1 9 9 3

METRIC CONVERSION CHART

INTO METRIC		
If you know	Multiply by	To get
Length		
inches	2.54	centimeters
feet	30.48	centimeters
miles	1.6093	kilometers
Volume		
gallons	3.786	liters
cubic feet	0.02832	cubic meters
Temperature		
Fahrenheit	Subtract 32 then multiply by 5/9ths	Celsius
Pressure		
inches water	1.87	mmHg
OUT OF METRIC		
Length		
centimeters	0.3937	inches
meters	3.28	feet
kilometers	1.6093	miles
Volume		
milliliters	1.247×10^{-3}	cubic feet
liters	0.264	gallons
cubic meters	35.31	cubic feet
Temperature		
Celsius	Multiply by 9/5ths, then add 32	Fahrenheit
Weight		
grams	28.35	ounces

9 1 1 2 7 1 5 1 9 9 4

This page intentionally left blank.

9 6 1 1 2 1 1 6

FACILITY EFFLUENT MONITORING PLAN FOR THE UO_3 PLANT

1.0 INTRODUCTION

The U.S. Department of Energy (DOE) Order 5400.1 (DOE 1988a) requires Facility Effluent Monitoring Plans (FEMP), be prepared for DOE facilities that have gaseous and/or liquid effluents. Only effluent sources that release significant pollutants or hazardous materials are included in this order; sanitary sewer and exhausts from air heating or cooling equipment are exempt. The effluent monitoring will be adequate to determine whether the public and environment are adequately protected during operations and whether operations are in compliance with DOE orders and other applicable federal, state, and local standards and requirements. It is also DOE policy that effluent monitoring programs meet high standards of quality and credibility.

The UO_3 Plant is located in the south-central portion of the 200 West Area of the Hanford Site. The plant consists of two primary processing buildings and several ancillary facilities. The purpose of the UO_3 Plant is to receive uranyl nitrate hexahydrate (UNH) from the Plutonium-Uranium Extraction (PUREX) Plant, concentrate it, convert the UNH to uranium trioxide (UO_3) powder by calcination and package it for offsite shipment. The UO_3 Plant has been placed in a standby mode. There are two liquid discharges, and three gaseous exhaust stacks, and seven building exhausters that are active during standby conditions.

1.1 POLICY

It is the policy of DOE and Westinghouse Hanford Company (Westinghouse Hanford) to conduct effluent monitoring that is adequate to determine whether the public and environment are adequately protected during DOE operations and whether operations are in compliance with DOE and other applicable federal, state, and local radiation standards and requirements. It is also DOE and DOE-contractor policy that effluent monitoring programs meet high standards of quality and credibility.

1.2 PURPOSE

The purpose of this plan is to fulfill the requirement DOE Order 5400.1 (DOE 1988a) for a FEMP for the UO_3 Plant. The following are the three goals of this FEMP:

- Identify and evaluate the gaseous and liquid effluents from the UO_3 Plant through characterization
- Determine the discharge criteria for gaseous and liquid effluents
- Establish a program to ensure compliance with those discharge criteria.

1.3 SCOPE

The scope of this document includes the characterization of, and a plan for monitoring, radioactive, and nonradioactive hazardous materials discharges from the UO_3 Plant. This plan contains complete documentation for both gaseous and liquid effluent monitoring systems for both radioactive and nonradioactive hazardous pollutants that could be discharged under routine and/or upset conditions.

The following specific sections detail how the FEMP is implemented and structured, and comprise the scope of this document.

Section	Scope
2.0	This brief facility description summarizes the processes that produce the effluents and couples them with a listing of effluents.
3.0	This section is a summary of DOE orders and federal and state regulations that establish FEMP requirements and discharge criteria.
4.0	Each gaseous and liquid effluent is characterized. Routine and upset conditions are described. The discharge criteria are developed and listed.
5.0	A description of each effluent's discharge point is given.
6.0	The design criteria of the monitoring/sampling (M/S) system are listed for air and water effluents.
7.0	Instrument descriptions and specifications of the effluent monitoring system are given.
8.0	Appropriate historical monitoring and sampling data are summarized.
9.0	Analytical requirements are listed and coupled with sampling and sample handling procedures.
10.0	Notification and reporting requirements for routine and environmental occurrence reports and procedural changes are listed.
11.0	This section provides the interface of the FEMP with the operational environmental surveillance program.
12.0	The Quality Assurance Plan governing the field activities, laboratory analysis, and record keeping is stated. Audits are also covered.

Section	Scope
13.0	Internal and external FEMP review requirements are given.
14.0	Compliance assessment is summarized.
15.0	Summary and conclusions are listed.
16.0	References used in the FEMP are listed.

1.4 DISCUSSION

The characterization of the radioactive and nonradioactive constituents in each effluent stream coupled to the regulatory framework provide the underlying rationale for the sampling and monitoring programs. The method of characterization discussed in this plan identifies potential pollutants in their individual effluents. Characterization parameters are based on process knowledge, and chemical and equipment use. An accurate description of the effluent's point of discharge is required for emission modeling and location of end-of-the-pipe M/S stations. Both normal and upset (either projected or actual) conditions are characterized.

As stated in Title 40, Code of Federal Regulations (CFR), Part 61, Subpart H (EPA 1989a), when determining the upset condition of an effluent, the emission controls between the point of generation and the discharge point are not to be considered. The emission controls are to be considered when assessing the types and amounts of a pollutant at the discharge point during normal operating conditions.

The effluent monitoring system must have the appropriate design criteria and technical specifications to fully characterize the effluent streams. A combination of continuous sensing, continuous or periodic sampling, and parameter specific monitoring may be used.

Proper sampling, analysis, and data recording of all effluent monitoring efforts provide defensible documentation that all appropriate discharge criteria are being met at the point of discharge.

Characterization of liquid waste pollutants is required by 40 CFR 261.3(b) (EPA 1989b). Other regulations, such as 40 CFR 61, Subpart H (EPA 1989a), provide guidance on the adequacy of gaseous effluent monitoring. However, all potential pollutants should be characterized for the following two reasons: (1) it is necessary to assess the preventive capabilities of engineered and administrative barriers as well as the consequences of an upset release due to failure of one of these barriers and (2) to verify that the sampling and monitoring programs address all pertinent constituents at the point of discharge.

This page intentionally left blank.

9 1 1 2 7 6 5 1 9 9 9

2.0 FACILITY DESCRIPTION

This section presents a brief facility and process description of the UO_3 Plant. These descriptions include the following:

- Location and physical layout of the process facility
- General description of the present, past, and future activities of the process
- Identity of wastestreams.

Further specific information on the gaseous and liquid effluents are given in Section 4.0, Identification and Characterization of Effluent Streams.

2.1 BRIEF FACILITY PHYSICAL DESCRIPTION

The UO_3 Plant is located in the south-central portion of the 200 West Area of the Hanford Site (Figure 2-1). The plant consists of two primary processing facilities, Buildings 224-U and 224-UA, and several ancillary facilities as shown in Figure 2-2. Principal buildings and structures are described below.

2.1.1 UO_3 Plant Process Facilities

2.1.1.1 Building 224-U. Building 224-U has concrete walls and was constructed in 1944. The building is 44 m long and 28 m wide. The roof is 12 m above grade. The primary functions of this building are to receive UNH solution from the PUREX Plant and to concentrate them for processing in Building 224-UA. In addition, a nitric acid recirculation loop from Building 224-U scrubs the calciner off-gas system in Building 224-UA to capture and dissolve entrained UO_3 fines.

The 224-U Building is divided along its length into a canyon side, containing the process equipment for concentrating the UNH, and a 3-floored gallery, containing offices, piping, and operating areas. Details of the building are shown in Figure 2-3.

2.1.1.2 Building 224-UA. Building 224-UA is a steel-walled and framed building constructed in 1957. The building is 29 m long and 16 m wide. Its principal roof is 8.5 m above grade, although a processing tower extends to 15.5 m above grade. The primary purposes of this building are to covert UNH from Building 224-U to UO_3 powder though calcination and to package it for offsite shipment. Calciner off-gas is routed to the nitric acid recovery system in Building 224-U.

The 224-UA Building has two floors; the equipment for the calcining process is on the upper floor, while the powder pickup bins and the wet particulate scrubbers are on the ground floor. Figure 2-4 shows details of this building.

Figure 2-1. UO_3 Plant Site Map.

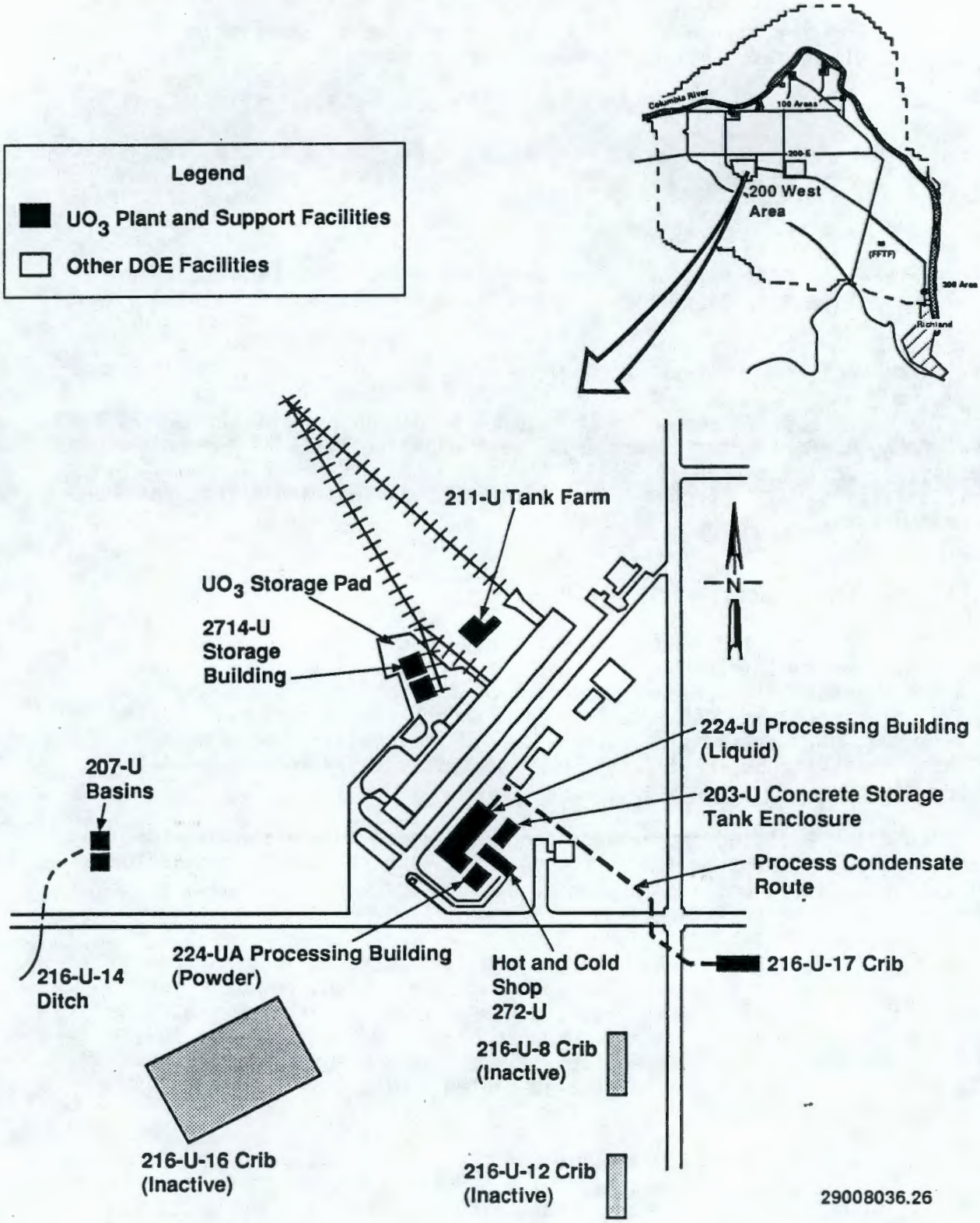

Figure 2-2. UO_3 Plant and Ancillary Facilities.

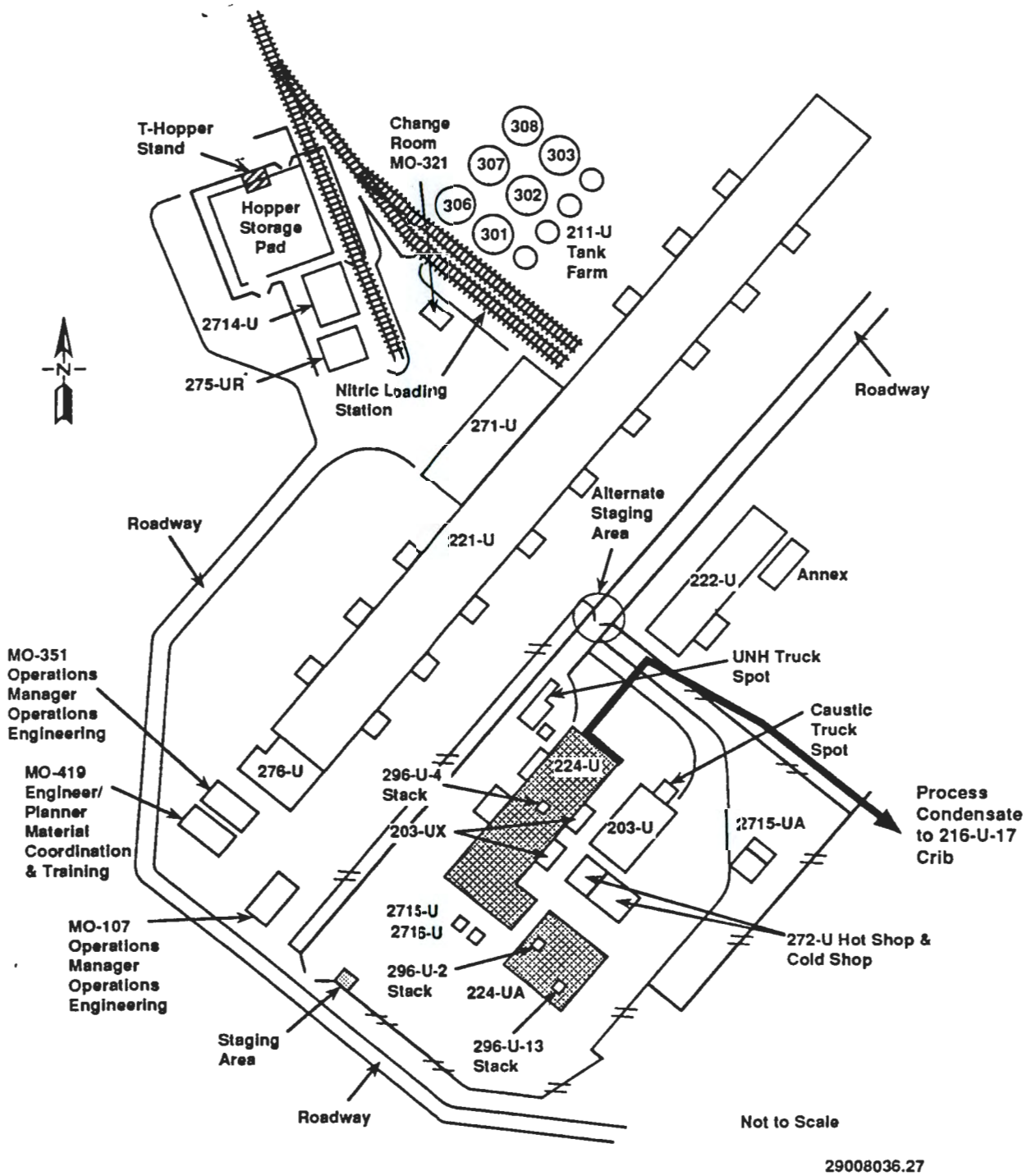

Figure 2-3. 224-U Building.

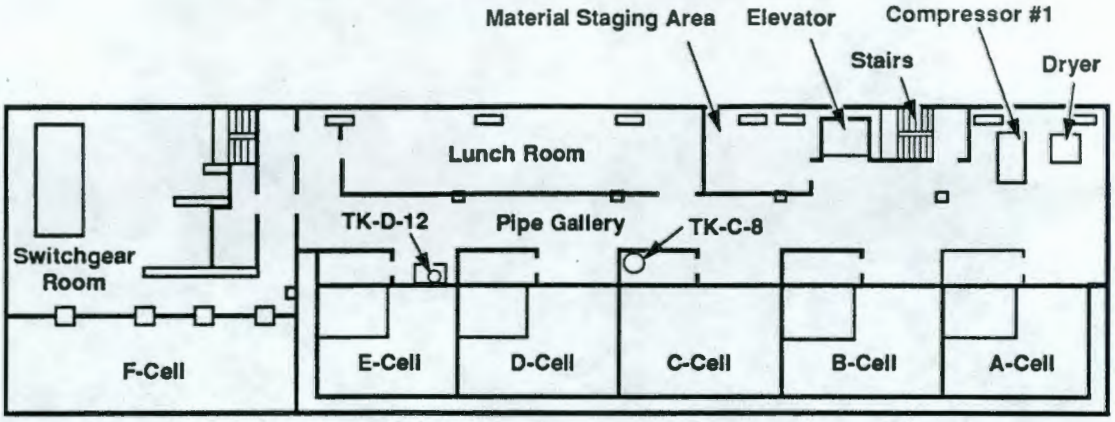

Second Floor Level

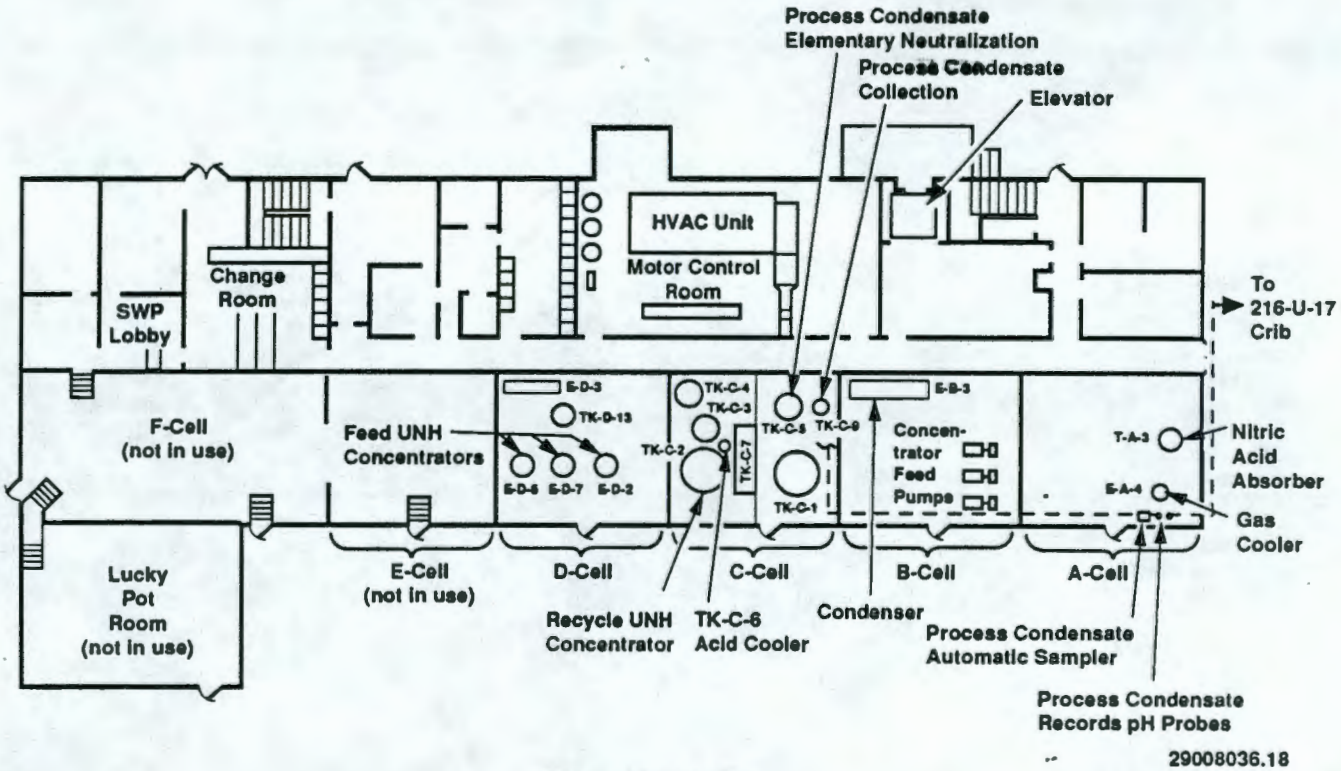

Ground Floor Level

29008036.19

Figure 2-4. 224-UA Building.

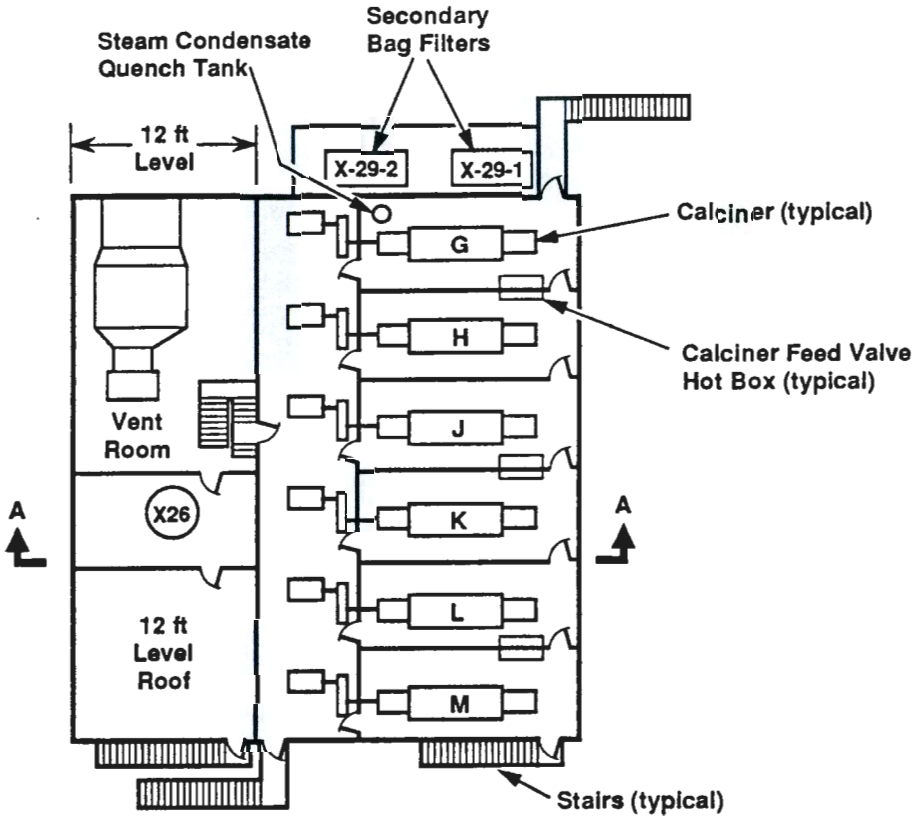

Second Floor Level

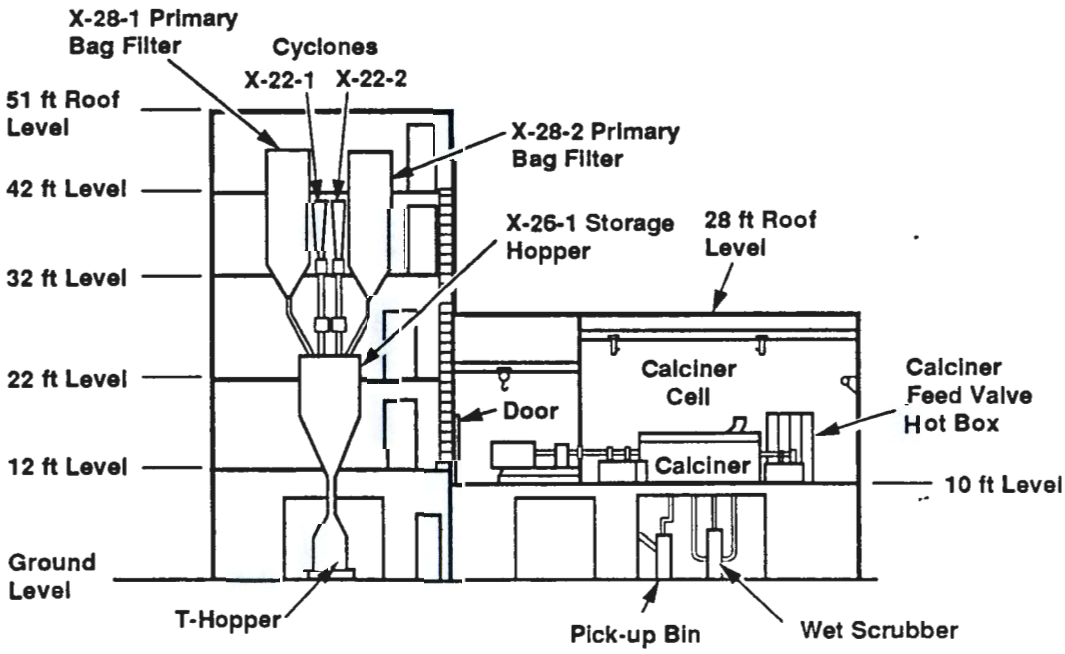

Section A-A

29008036.14

2.1.1.3 203-U Enclosure. The 203-U enclosure is a roofless, concrete-diked, process chemical tank, storage area 24 m long and 13.7 m wide. The 203-U enclosure stores feed UNH from PUREX, recycled UNH for return to the PUREX Plant, process condensate, and potassium hydroxide. Any solutions collected in the 203-U enclosure sump are transferred to Building 224-U for processing.

2.1.1.4 Backpad Area. The backpad area between 224-U, 203-UX, 224-UA, and 203-U contains additional tankage and piping connecting the main process buildings. The concrete-diked 203-UX enclosures in the backpad area adjacent to the 224-U Building contain tanks that store concentrated UNH from the 224-U Building in preparation for processing in 224-UA. Any rainfall or uranium-bearing solutions collected in sumps in the potentially contaminated backpad area are routed to Building 224-U for processing.

2.1.1.5 211-U Tank Farm. The 211-U Tank Farm contains four storage tanks (including one that is maintained as a spare) where nitric acid recovered at the UO_3 Plant is staged for rail shipment to PUREX. Sumps in the 211-U Area drain to the UO_3 Plant wastewater stream. There is no connection from this facility to the UO_3 Plant Process Condensate Stream.

2.1.1.6 Retired Facilities. Former process and laboratory Buildings 221-U, 271-U, and 222-U, and other tanks at 211-U (formerly associated with 221-U), are no longer in operation. While these retired facilities are not directly associated with the UO_3 Plant, rainwater runoff and HVAC (heating-ventilating-air conditioning) condensates from those buildings still drain to the UO_3 Plant wastewater system.

2.1.2 Process Condensate Handling Facilities

The UO_3 Plant Process Condensate Stream originates in off-gas condensers in Building 224-U, which process contributor streams from throughout the UO_3 Plant. From the condensers, the process condensate drains to a surge tank (TK-X-37) in 203-U. The process condensate is neutralized in Building 224-U and is currently pumped to storage tanks at the UO_3 Plant. Redundant pH probes, transmitters, alarm switches, and strip chart recorders monitor the pH of the process condensate at a location just before exiting the 224-U Building.

The 216-U-17 Crib became the disposal site for the UO_3 Plant process condensate in January 1988. Use of the 216-U-17 Crib was suspended in July 1989, because of an unresolved regulatory issue. Process condensate is stored in tanks at the UO_3 Plant pending review of the regulatory status of discharge to the crib.

2.2 BRIEF PROCESS DESCRIPTION

The UO_3 Plant has two principal operating modes, UNH calcination and standby. During the calcination mode, UO_3 operations concentrate a 60% UNH solution to a 100% UNH solution then calcines the 100% UNH solution into UO_3 powder. In the past, the UO_3 powder was shipped to the DOE Fernald Plant for

further processing. Offsite shipments of UO_3 powder have ceased and the powder is stored at the UO_3 Plant. The nitrogen oxides liberated during calcining are converted to nitric acid for reuse at PUREX.

UO_3 is expected to be placed in a standby mode about November 1991. Once in standby mode, no processing activities will occur. There will be three process-related exhaust stacks, seven roof exhausters, and two wastewater streams that will remain active.

2.3 IDENTIFICATION AND CHARACTERIZATION OF POTENTIAL SOURCE TERMS

Source terms for effluents from the UO_3 facility depend on the building or process they originate from and whether the plant is in calcination or standby mode. This document has been written to address the near-future status of the UO_3 facility in standby mode.

2.3.1 Gaseous Effluents

There are three exhaust stacks and seven roof exhausts that contribute to the gaseous effluents from the UO_3 Plant. The seven roof exhausters are considered to be a source of air effluent because they are from room or corridor exhausts that are noncontaminated, normally occupied, or accessed areas. The three air exhaust stacks that may be active when the UO_3 Plant is in standby are 296-U-2, 296-U-4, and 296-U-13. Of these, 296-U-2 and 296-U-13 are active only during maintenance-related activities. Table 4-1, in Section 4.0, summarizes UO_3 stack exhaust data. The following characterizations of these stacks are taken primarily from the *Effluent Monitoring Plan for UO_3 Plant Gaseous Effluents*, SD-CP-EMP-003 (WHC 1989a). Specific stack physical data are summarized in Table 4-1.

2.3.1.1 296-U-2 Stack. The 296-U-2 stack is located on the 224-UA roof and serves to exhaust air from the powder handling system. Air for this system originates in the pickup bins. Air is subsequently routed through parallel cyclone separators, primary bag filters, secondary bag filters (both bag filters separate essentially all the UO_3 powder from the air), prefilters, and high-efficiency particulate air (HEPA) filters before reaching the exhausters (Figure 2-5).

2.3.1.2 296-U-4 Stack. The 296-U-4 Stack system, located on the 224-U roof, exhausts unfiltered cooled air from the process off-gas system. During plant standby, this off-gas is composed of process tank vents and vapor from the C-2 tank concentrator. Flow though the stack is supplied by a 125 lb/in^2 (gauge) steam jet, and a 2,200 ft^3/min air blower. The EB-3 and ED-3 condensers then knock out most condensables before discharge.

The 296-U-4 stack has the following three contributing streams: (1) the acid absorber exhaust (during plant operation, only), (2) the ED-3 condenser exhaust, and (3) the cell air exhaust from the X-14 blower (Figure 2-6).

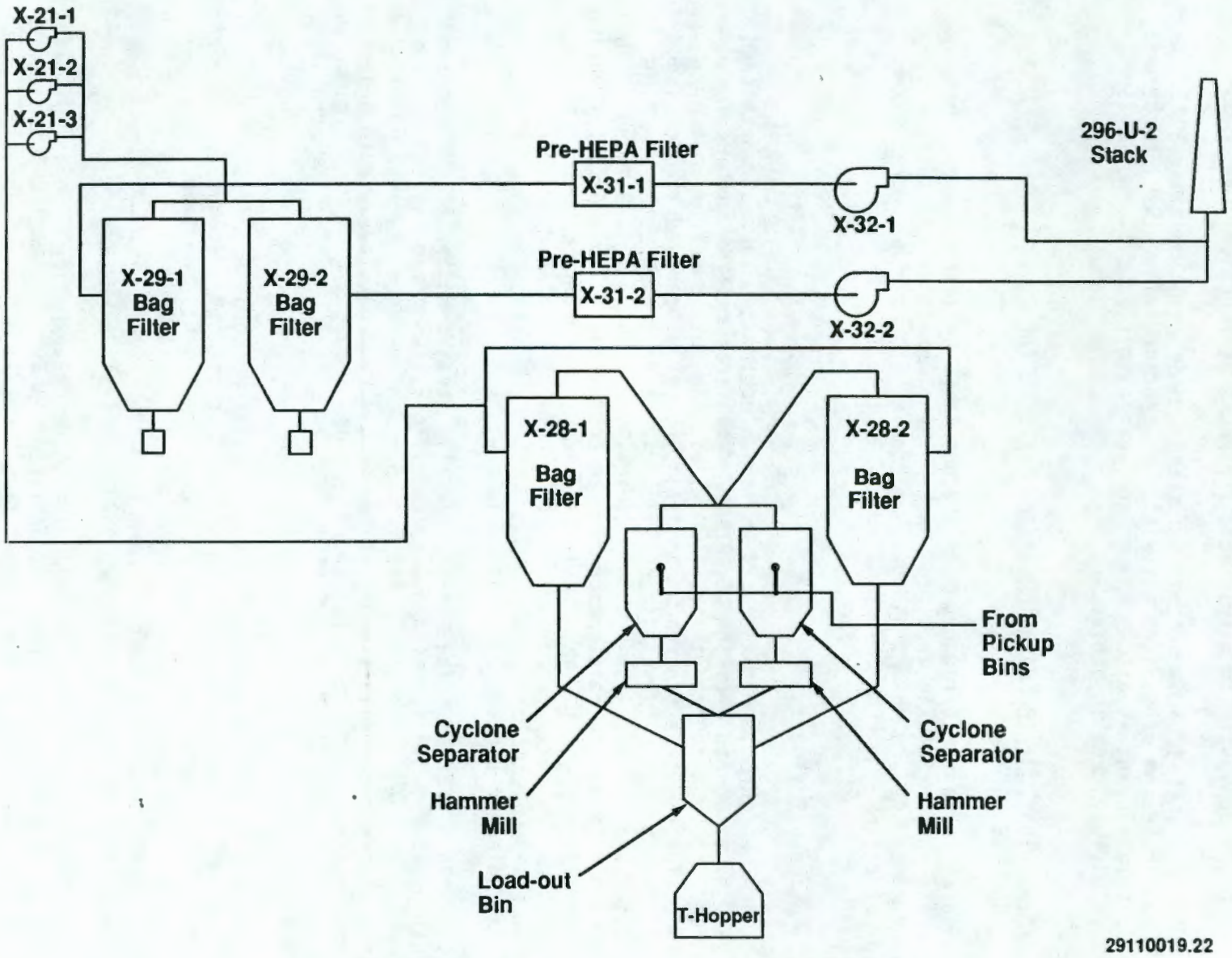

Figure 2-5. Powder Handling Off-Gas System.

Figure 2-6. 296-U-4 Contributing Stream.

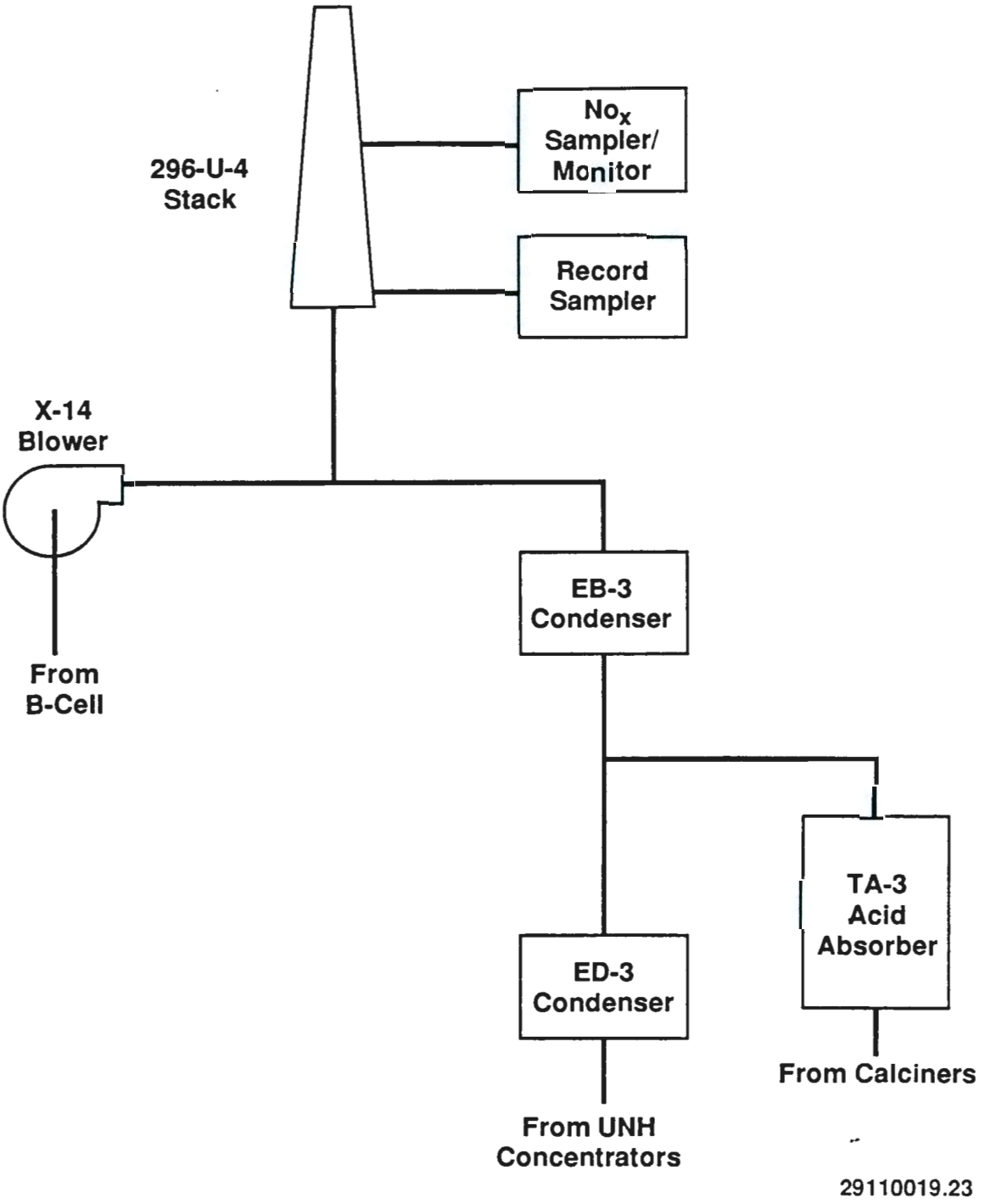

The primary source for the acid absorber exhaust system is the calciner off-gas, which has high concentrations of NO_x fumes. Most of the tanks vented though the vessel vent system are also part of this contributing stream.

The primary sources for the ED-3 condenser exhaust system are the UNH concentrators. Several tanks are also vented though this exhaust system.

Exhaust air from B-cell is the major contributor to the 296-U-4 stream. The primary purpose of this stream is to provide high gas velocities though the stack to propel the NO_x fumes away from workers.

2.3.1.3 296-U-13 Stack. The 296-U-13 stack is a single-pass air exhaust system. This system exhausts filtered air from the UO_3 powder loadout hood. The filters consist of 80% efficient prefilters and HEPA filters (Figure 2-7). The 296-U-13 Stack is located on the 224-UA roof.

The 296-U-13 stack has no other contributing streams. The stack's sole purpose is to exhaust air from the powder load-out hood.

2.3.2 UO_3 Liquid Emissions

There are two liquid waste streams at the UO_3 Plant: process condensate and plant wastewater.

2.3.2.1 Process Condensate. The process condensate stream consists almost entirely of condensate formed from the cooling of process off-gas streams in either of two vessel vent condensers, sanitary water used to maintain minimum flows to the acid absorber, and phosphoric acid and potassium hydroxide used to perform elementary neutralization. Entrainment or condensed volatiles may introduce hazardous chemicals or radionuclides into the stream.

An automatic batch neutralization system controls the discharge pH of the process condensate effluent. During standby operation, process condensate rates are low enough to allow batchwise analysis for radionuclides and hazardous chemicals before release. Figure 4-1 details the contributors to the UO_3 Plant Process Condensate.

2.3.2.2 Plant Wastewater. The plant wastewater discharge consists almost entirely of raw water or sanitary water used for cooling in condensers and compressors. Building and tank heaters also contribute small flows to the stream. The raw water has been taken from the Columbia River. The plant wastewater stream is designed to be an uncontaminated stream. Except for off-normal conditions such as catastrophic equipment failure, none of the contributing sources comes directly in contact with any process fluids. The only chemicals added to the wastewater stream are desiccants and water treatment chemicals. The concentrations of the constituents in the desiccants (potassium carbonate, sodium nitrate, and urea) and water treatment chemicals are non-toxic under Washington State *Dangerous Waste Regulations*, Washington Administrative Code (WAC) 173-303 (WAC 1989a).

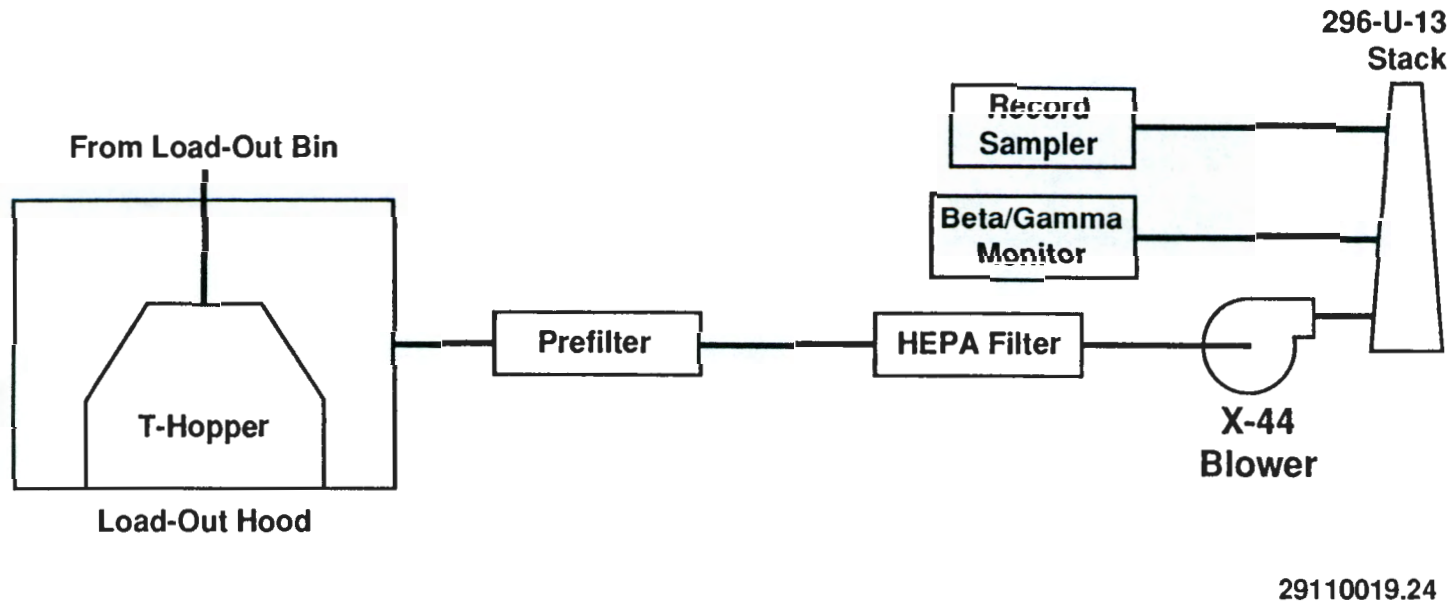

Figure 2-7. Load-Out Hood Exhaust System.

The plant wastewater stream routinely discharges through either section of the two-section 207-U Retention Basin and then into the 216-U-14 Ditch. Detection of hazardous chemicals or of the very low radionuclide content is through analysis of periodic samples. Figure 4-2 shows the UO_3 Plant wastewater routing.

3.0 APPLICABLE REGULATIONS

Conditions and requirements for monitoring existing or potential releases of radioactive and other chemicals to the environment are contained in DOE orders, federal, state and local laws and regulations. The applicable regulations and standards are listed in Table 3-1.

Westinghouse Hanford is currently reviewing this FEMP for compliance to applicable regulations and comments will be incorporated into future revisions. This review will be completed by January 1, 1992.

3.1 U.S. DEPARTMENT OF ENERGY ORDERS

3.1.1 U.S Department of Energy Order 5400.1

The *General Environmental Protection Program*, DOE Order 5400.1 (DOE 1988a), requires a written environmental monitoring plan for each site, facility, or process that uses, generates, releases, or manages significant pollutants or hazardous materials. The plan must include the rationale and design criteria for the monitoring program as well as describing the extent and frequency of the monitoring analysis. The plan must also contain quality assurance requirements, program implementation procedures, directions for preparation and implementation of reports and directions for identification and discussion of effluent monitoring and environmental surveillance.

The effluent monitoring portion of the plan must verify compliance with applicable regulations and DOE orders. It should also evaluate the effectiveness of treatment, identify potential environmental problems and evaluate the need for remedial action or mitigation measures, support permit revision and/or reissuance and detect, characterize and report unplanned releases.

3.1.2 U.S. Department of Energy Order 5400.5

The DOE Order 5400.5 (DOE 1990a) requires a monitoring plan that complies with the requirements of DOE Order 5400.1 (DOE 1988a). Compliance with the requirements of DOE Order 5400.5 (DOE 1990a) may be demonstrated based on calculations that make use of information obtained from the monitoring and surveillance programs.

3.2 FEDERAL

3.2.1 Environmental Protection Agency Regulations on National Emission Standards for Hazardous Air Pollutants, Title 40 Code of Federal Regulations, Part 61

The *National Emission Standards for Emissions of Radionuclides Other Than Radon from Department of Energy Facilities*, Title 40 CFR Part 61, Subpart H,

Table 3-1. Applicable Regulations and Standards. (2 sheets)

Agency/Originator	Regulation No.	HA	HL	RA	RL	Summary/Application
U.S. Department of Energy, (DOE) Washington, D.C.	DOE Order 5400.1, 1988 General Environmental Protection Program	X	X	X	X	Outlines effluent monitoring requirements
	DOE Order 5400.5, 1990 Radiation Protection of the Public and Environment			X	X	Protects public/environment from radiation associated with DOE operations
	DOE Order 5480.4, 1989 Environmental Protection, Safety, and Health Protection Standards	X	X	X	X	Sets requirements for the application of the mandatory environmental protection, safety, and health (ES&H) standards; lists reference ES&H standards
	DOE Order 5484.1, 1981 Environmental Protection, Safety, and Health Protection Information Reporting Requirements	X	X	X	X	Sets requirements for reporting information having environmental protection, safety and health protection significance
	DOE Order 5820.2A, 1988 Radioactive Waste Management	X	X	X	X	Sets radioactive waste management requirements
U.S. Environmental Protection Agency, (EPA) Washington, D.C.	40 CFR 61, 1989 National Emission Standards for Hazardous Air Pollutants	X		X		Sets national emission standards for hazardous air pollutants (NESHAP)
	40 CFR 61, 1989 Subpart A General Provisions	X				Regulates hazardous pollutants
	40 CFR 61, 1989 Subpart H National Emission Standards for Emissions of Radionuclides other than Radon from Department of Energy Facilities			X		Sets emissions standards/monitoring requirements for radionuclides
	40 CFR 122, 1983 EPA Administered Permit Programs: The National Pollutant Discharge Elimination System		X			Governs release of nonradioactive liquids
	40 CFR 141.16, 1989 Safe Drinking Water Act (National Interim Primary Drinking Water Regulations)		X		X	Sets maximum contaminant levels in public water systems
	40 CFR 191, 1985 Disposal of Spent Nuclear Fuel, High-Level and Transuranic Radioactive Wastes				X	Regulates radioactive waste disposal
	40 CFR 261, 1989 Identification and Listing of Hazardous Waste		X			Identifies and lists hazardous wastes
	40 CFR 302.4, 1980 Comprehensive Environmental Response, Compensation and Liability Act of 1980 (CERCLA): Designation, Reportable Quantities and Notification	X	X	X	X	Designates hazardous materials, reportable quantities, notification process

Table 3-1. Applicable Regulations and Standards. (2 sheets)

Agency/Originator	Regulation No.	HA	HL	RA	RL	Summary/Application
EPA (Cont'd)	40 CFR 355, 1987 Superfund Amendments and Reauthorization Act of 1986 (SARA): Emergency Planning and Notification	X	X			Identifies threshold planning quantities for extremely hazardous substances
American National Standards Institute, (ANSI) New York, New York	N 13.1 - 1969* Guidance to Sampling Airborne Radioactive Materials in Nuclear Facilities			X		Sets standards for effluent monitoring systems
	N 42.18*, 1974 Specification and Performance of On-site Instrumentation for Continuously Monitoring Radioactivity in Effluents			X	X	Recommendations for the selection of instrumentation for the monitoring of radioactive effluents
Washington State Department of Ecology, (Ecology) Olympia, Washington	WAC 173-216, 1989 State Waste Discharge Permit Program		X			Governs discharges to ground and surface waters
	WAC 173-220, 1988 National Pollutant Discharge Elimination system Permit		X		X	Governs wastewater discharges to navigable waterways; controls NPDES permit process
	WAC 173-240, 1990 Submission of Plans and Reports for Construction of Wastewater Facilities		X			Controls release of nonradioactive liquids
	WAC 173-303, 1989 Dangerous Waste Regulations		X			Regulates dangerous wastes; prohibits direct release to soil columns
	WAC 173-400, 1976 General Regulations for Air Pollution Sources	X				Sets emissions standards for hazardous air pollutants
Benton-Franklin Walla-Walla Counties Air Pollution Control Authority, (APCA) Richland, Washington	General Regulation 80-7, 1980	X				Regulates air quality

HA = hazardous airborne.
HL = hazardous liquid.
RA = radioactive airborne.
RL = radioactive liquid.
*Refers to standards that are referenced in the DOE and EPA regulations.

(EPA 1989a) establishes exposure limits and sets out monitoring requirements. The exposure limits for members of the public from radionuclide emissions is an effective dose equivalent not to exceed 10 mrem/yr. Compliance with this standard is measured by calculating the highest effective dose equivalent (EDE) where a person resides or abides using an EPA approved method.

Emissions of radionuclides must be measured at all release points that have a potential to discharge radionuclides into the air in quantities that could cause an effective dose equivalent in excess of 1% of the standard. If the EDE caused by all emissions is less than 1% of the standard (<0.1 mrem/yr) the facility is exempt from source reporting requirements. All radionuclides that could contribute greater than 10% of the potential EDE for a release point (1 mrem/yr) shall be measured individually. With prior U.S. Environmental Protection Agency (EPA) approval, DOE may determine these emissions though alternative procedures. For other release points that have a potential to release radionuclides into the air, periodic confirmatory measurements shall be made to verify low emissions.

To determine whether a release point is subject to emission measurement requirements it is necessary to evaluate the potential for radionuclide emissions for that release point. In evaluating the potential of a release point to discharge radionuclides into the air, the estimated radionuclide release rates shall be based on the discharge of the effluent stream that would result if all pollution control equipment did not exist, but the facility operations were otherwise normal.

The 40 CFR 61, Subpart H (EPA 1989a), also states that effluent streams shall be directly monitored continuously with an in-line detector or representative samples of the effluent stream shall be withdrawn continuously from the sampling site following the guidance presented in *Guidance to Sampling Airborne Radioactive Materials in Nuclear Facilities*, American National Standards Institute (ANSI) N13.1-1969 (ANSI 1969). The requirements for continuous sampling are applicable to batch processes when the unit is in operation. Periodic sampling (grab samples) may be used only with EPA's prior approval. Such approval may be granted in cases where continuous sampling is not practical and radionuclide emission rates are relatively constant. In such cases, grab samples shall be collected with sufficient frequency so as to provide a representative sample of the emissions.

3.2.2 Reportable Quantities, Title 40, Code of Federal Regulations, Part 302

The regulations in 40 CFR 302 (EPA 1989c) designate hazardous substances and identify reportable quantities and notification requirements for releases of these hazardous substances under the *Comprehensive Environmental Response, Compensation, and Liability Act of 1980* (CERCLA) and the *Clean Water Act of 1977*.

Any unpermitted release of any of these designated hazardous substances must be reported. Therefore, if the possibility exists for a facility to release any of the designated substances, waste streams must be monitored for their presence and monitoring practices must be provided in a FEMP.

9 1 1 2 7 6 5 5 2 0 1 5

3.3 STATE

3.3.1 Washington State Ambient Air Quality Standard and Emission Limits for Radionuclides

Although the *Washington State Ambient Air Quality Standard and Emission Limits for Radionuclides*, WAC 173-480 (WAC 1989b) establishes a 25 mrem/yr EDE for public exposure to radionuclide emissions, facilities must comply with the most restrictive of federal, state, or local law. Therefore, the exposure limit that must be complied with is 10 mrem/yr; however, compliance is calculated at the point of maximum annual air concentration in an unrestricted area where any member of the public may be located (fence boundary).

3.3.2 Groundwater Protection

Radionuclides are defined as hazardous air pollutants, so they also will be construed to be hazardous in liquid effluent, without any specific listing of individual radionuclides as a hazardous substance under water pollution control laws.

The *Water Quality Standards for Groundwaters of the State of Washington*, WAC 173-200 (WAC 1987) (Table 3-2) protect groundwater to the level of drinking water standards. These standards limit exposures to gross alpha, gross beta, tritium, ^{90}Sr, and $^{226,228}Ra$. For radionuclides that are not specifically listed, exposures are limited by Federal standards to an EDE not to exceed 4 mrem/yr.

3.3.3 Dangerous Waste Regulations WAC 173-303

Any release of a dangerous waste or hazardous substance (as designated by WAC 173-303-070) (WAC 1989a) to the environment, except permitted releases, must be reported. Wastestreams that have the potential to contain dangerous waste constituents must be monitored accordingly.

3.4 LOCAL

3.4.1 Benton-Franklin-Walla Walla Counties Air Pollution Control Authority

The local air pollution control authority has jurisdiction over all air emissions except radionuclide emissions in Benton, Franklin, and Walla Walla Counties, including the Hanford Site. Currently, there are no local standards more restrictive than the previously mentioned state and federal limits.

Table 3-2. Ground Water Quality Criteria. (5 sheets)

Contaminant		Criterion
I. Primary and secondary contaminants and radionuclides		
A.	Primary contaminants	
	Barium[a]	1.0 mg/L
	Cadmium[a]	0.01 mg/L
	Chromium[a]	0.05 mg/L
	Lead[a]	0.05 mg/L
	Mercury[a]	0.002 mg/L
	Selenium[a]	0.01 mg/L
	Silver[a]	0.05 mg/L
	Fluoride	4 mg/L
	Nitrate (as N)	10 mg/L
	Endrin	0.0002 mg/L
	Methoxychlor	0.1 mg/L
	1,1,1-Trichloroethane	0.20 mg/L
	2-4D[b]	0.10 mg/L
	2,4,5-TP Silvex	0.01 mg/L
	Total Coliform Bacteria	1/100 mL
B.	Secondary contaminants	
	Copper[a]	1.0 mg/L
	Iron[a]	0.30 mg/L
	Manganese[a]	0.05 mg/L
	Zinc[a]	5.0 mg/L
	Chloride	250 mg/L
	Sulfate	250 mg/L
	Total Dissolved Solids	500 mg/L
	Foaming Agents	0.5 mg/L
	pH	6.5-8.5
	Corrosivity	noncorrosive
	Color	15 color units
	Odor	3 threshold odor units

9 1 1 2 3 6 5 2 0 1 7

Table 3-2. Ground Water Quality Criteria. (5 sheets)

Contaminant		Criterion
C.	Radionuclides	
	Gross alpha particle activity	15 pCi/L
	Gross beta particle radioactivity	
	Gross beta activity	50 pCi/L
	Tritium	20,000 pCi/L
	^{90}Sr	8 pCi/L
	$^{226,228}Ra$	5 pCi/L
	^{226}Ra	3 pCi/L
II. Carcinogens		
	Acrylamide	0.02 μg/L
	Acrylonitrile	0.07 μg/L
	Aldrin	0.005 μg/L
	Aniline	14 μg/L
	Aramite	3 μg/L
	Arsenic[a]	0.05 μg/L
	Azobenzene	0.7 μg/L
	Benzene	1.0 μg/L
	Benzidine	0.0004 μg/L
	Benzo(a)pyrene	0.008 μg/L
	Benzotrichloride	0.007 μg/L
	Benzyl chloride	0.5 μg/L
	Bis(chloroethyl)ether	0.07 μg/L
	Bis(chloromethyl)ether	0.0004 μg/L
	Bis(2-ethylhexyl) phthalate	6.0 μg/L
	Bromodichloromethane	0.3 μg/L
	Bromoform	5 μg/L
	Carbazole	5 μg/L
	Carbon tetrachloride	0.3 μg/L
	Chlordane	0.06 μg/L

Table 3-2. Ground Water Quality Criteria. (5 sheets)

Contaminant		Criterion
	Chlorodibromomethane	0.5 μg/L
	Chloroform	7.0 μg/L
	4 Chloro-2-methyl aniline	0.1 μg/L
	4 Chloro-2-methyl analine hydrochloride	0.2 μg/L
	o-Chloronitrobenzene	3 μg/L
	p-Chloronitrobenzene	5 μg/L
	Chlorthalonil	30 μg/L
	Diallate	1 μg/L
	DDT (includes DDE and DDD)	0.3 μg/L
	1,2 Dibromoethane	0.001 μg/L
	1,4 Dichlorobenzene	4 μg/L
	3,3' Dichlorobenzidine	0.2 μg/L
	1,1 Dichloroethane	1.0 μg/L
	1,2 Dichloroethane (ethylene chloride)	0.5 μg/L
	1,2 Dichloropropane	0.6 μg/L
	1,3 Dichloropropene	0.2 μg/L
	Dichlorvos	0.3 μg/L
	Dieldrin	0.005 μg/L
	3,3' Dimethoxybenzidine	6 μg/L
	3,3 Dimethylbenzidine	0.007
	1,2 Dimethylhydrazine	60 μg/L
	2,4 Dinitrotoluene	0.1 μg/L
	2,6 Dinitrotoluene	0.1 μg/L
	1,4 Dioxane	7.0 μg/L
	1,2 Diphenylhydrazine	0.09 μg/L

Table 3-2. Ground Water Quality Criteria. (5 sheets)

Contaminant		Criterion
	Direct Black 38	0.009 μg/L
	Direct Blue 6	0.009 μg/L
	Direct Brown 95	0.009 μg/L
	Epichlorohydrin	8 μg/L
	Ethyl acrylate	2 μg/L
	Ethylene dibromide	0.001 μg/L
	Ethylene thiourea	2 μg/L
	Folpet	20 μg/L
	Furazolidone	0.02 μg/L
	Furium	0.002 μg/L
	Furmecyclox	3 μg/L
	Heptachlor	0.02 μg/L
	Heptachlor Epoxide	0.009 μg/L
	Hexachlorobenzene	0.05 μg/L
	Hexachlorocyclohexane (alpha)	0.001 μg/L
	Hexachlorocyclohexane (technical)	0.05 μg/L
	Hexachlorodibenzo-p-dioxin, mix	0.00001 μg/L
	Hydrazine/Hydrazine sulfate	0.03 μg/L
	Lindane	0.06 μg/L
	2 Methoxy-5-nitroaniline	2 μg/L
	2 Methylaniline	0.2 μg/L
	2 Methylaniline hydrochloride	0.5 μg/L
	4,4' Methylene bis(N,N'-dimethyl) aniline	2 μg/L
	Methylene chloride (dichloromethane)	5 μg/L
	Mirex	0.05 μg/L
	Nitrofurazone	0.06 μg/L
	N-Nitrosodiethanolamine	0.03 μg/L

Table 3-2. Ground Water Quality Criteria. (5 sheets)

Contaminant		Criterion
	N-Nitrosodiethylamine	0.0005 μg/L
	N-Nitrosodimethlamine	0.002 μg/L
	N-Nitrosodiphenylamine	17 μg/L
	N-Nitroso-di-n-propylamine	0.01 μg/L
	N-Nitrosopyrrolidine	0.04 μg/L
	N-Nitroso-di-n-butylamine	0.02 μg/L
	N-Nitroso-N-methylethylamine	0.004 μg/L
	PAH	0.01 μg/L
	PBBs	0.01 μg/L
	PCBs	0.01 μg/L
	o-Phenylenediamine	0.005 μg/L
	Propylene oxide	0.01 μg/L
	2,3,7,8-Tetrachlorodibenzo-p-dioxin	0.0000006 μg/L
	Tetrachloroethylene (perchloroethylene)	0.8 μg/L
	p,α,α,α-Tetrachlorotoluene	0.004 μg/L
	2,4 Toluenediamine	0.002 μg/L
	o-Toluidine	0.2 μg/L
	Toxaphene	0.08 μg/L
	Trichloroethylene	3 μg/L
	2,4,6-Trichlorophenol	4 μg/L
	Trimethyl phosphate	2 μg/L
	Vinyl chloride	0.02 μg/L

[a]Metals are measured as total metals.
[b]2,4 - dichlorophenoxyacetic acid
PAH = polychlorinated aromatic hydrocarbons
PBB = polybromobiphenyl
PCB = polychlorobiphenyl
mg/L = milligrams/liter
mg/L = milliliter
pCi/L = pico Curie/liter
μg/L = micrograms/liter

9 1 1 2 3 6 5 2 0 2 1

4.0 IDENTIFICATION AND CHARACTERIZATION OF EFFLUENT STREAMS

This section addresses the chemical and radiological composition of UO_3 Plant effluents. A description of the gaseous effluents is followed by a brief discussion of their routine and upset operating conditions. Liquid effluents are then similarly described.

4.1 IDENTIFICATION AND CHARACTERIZATION OF SOURCE TERMS CONTRIBUTING TO EACH AIR EFFLUENT STREAM

Three air exhaust stacks are active when the UO_3 Plant is in standby. They are the 296-U-2, 296-U-4, and 296-U-13 stacks. (Stack exhaust data are summarized in Table 4-1.)

4.1.1 Discharge Descriptions

4.1.1.1 Radioactive Emissions. The source of airborne contaminants is residual fugitive material, vapors, or gases picked up by the air currents in the UO_3 buildings and subsequently entrained into the ventilation systems' building exhausts. Annual releases were determined by multiplying the exhaust flow rate for each stack by the outgoing air concentration of each specific radionuclide. The concentration of a specific radionuclide in the air effluents was either measured selectively at the discharge point or was inferred from measurements of gross alpha and gross beta radioactivity. The concentration of uranium nuclides was available only as a composite, i.e., combined ^{234}U, ^{235}U, ^{238}U, etc., concentrations. It has been assumed that uranium exists solely as ^{234}U. This is a worst-case assumption and results in a slightly higher calculated EDE. In all stack effluents, the concentration of some radionuclides was below detectable limits. In these cases, the limit of detection for that radionuclide was used as a conservative estimate of its concentration.

Table 4-1. UO_3 Stack Exhaust Data.

Stack reference	Height*		Diameter		Flow		Temperature	
	(ft)	(m)	(ft)	(m)	(ft^3/min)	(m^3/s)	C	K
296-U-2	41	12.5	1.17 ft x 1.00 ft** 0.356 m x 0.305 m		2,000	0.943	50	323
296-U-4	119	36.5	0.83	0.25	2,300	1.08	20	293
296-U-13	55	16.8	2.08	0.64	6,000	2.83	50	323

*Stack height is measured from the ground.
**2296-U-2 stack has a rectangular effluent outlet.

During standby mode at the UO_3 Plant, releases from the exhaust stack include limited quantities of radionuclides, as depicted in Table 4-2. These emission data represent stack emissions after HEPA filtration. The data supplied in Table 4-2 are averages computed from data reported in the *Effluent Discharges and Solid Waste Management Annual Reports* (200 Areas/600 Areas) for calendar years 1988 and 1989 (WHC 1989b and WHC 1990a, respectively).

4.1.1.2 Other Hazardous Releases. During the standby mode of operation all material processing has stopped and there are no nonradioactive hazardous air pollutant releases. Consequently, exposure to, and uptake by, the maximally exposed individual (MEI) are zero.

4.1.2 Routine Operating Conditions

The ventilation systems will continue to exhaust the same areas of the UO_3 Plant as described in Section 2.2. However, because the UO_3 Plant will be placed in a standby mode following Run 17, the source radionuclides that are vented will be reduced and effluent concentrations are expected to be at, or below, the values given in Table 4-2.

Table 4-2. UO_3 Radionuclide Emissions from Exhaust Stacks.

Nuclide	Activity from exhaust stack -- Ci/yr			
	296-U-2	296-U-4	296-U-13	Total
^{241}Am	4.53 E-11	3.89 E-07	3.62 E-10	3.90 E-07
^{239}Pu	1.96 E-11	1.96 E-07	1.66 E-10	1.96 E-07
^{234}U	1.67 E-08	4.67 E-06	1.33 E-08	4.70 E-06
^{137}Cs	2.69 E-10	1.77 E-06	1.48 E-09	1.77 E-06
^{90}Sr	6.68 E-11	4.90 E-07	3.69 E-10	4.91 E-07
Total	1.71 E-08	7.51 E-06	1.57 E-08	7.55 E-06

4.1.3 Upset Operating Conditions

The upset release as prescribed by EPA regulations, *National Emission Standards for Hazardous Air Pollutants* (NESHAP), (40 CFR 61, Subpart H) (EPA 1989a) is to be the failure of a single engineered barrier. For the UO_3 Plant exhausts, this was taken to be failure of the HEPA filters. The increase in effluent radionuclides is described in Section 4.1.4.5 for 296-U-2 and 296-U-13 stacks. Filtration is not provided for the 296-U-4 stack. A demister is being added to the 296-U-4 stack. The demister will act as a scrubber for effluents being discharged from the stack during operation, but will have no effect on stack emission during standby conditions.

4.1.4 Dispersion Modeling

Only radiological emissions are present in the UO_3 Plant air effluent during the standby mode of operation. The CAP-88 (Beres 1989) computer code calculates dose commitments that result from the air transport of radionuclides released from the effluent discharge points above the UO_3 facility. CAP-88 is approved by the EPA for demonstrating compliance with the NESHAP standard for radiological releases (EPA 1989a). CAP-88 computes the radiation exposure to the MEI via the ingestion, inhalation, air-immersion (exposure resulting from being inside a plume of radiation), and groundshine (exposure resulting from deposited radioactive particles) pathways. The magnitude of exposure via any of the aforementioned pathways is strongly related to the distance between the source and receptor.

A total of three air effluent stacks contribute nearly all of the airborne radionuclide releases form the UO_3 Plant. Each stack possesses its own unique stack characteristics including stack height above the ground, stack diameter, and exhaust velocity or flow rate. Stack characteristics are used to assess the plume rise and determine the final height of release of the plume. The temperatures of the air effluents are nearly room temperature. As such, plume rises are not thermally driven and a methodology is used by AIRDOS-EPA (Moore, et al. 1979) that calculates plume rise form stack exhaust momentum. Table 4-1 summarized the characteristics of the three UO_3 exhaust stacks.

CAP-88 uses a gaussian plume methodology for dispersing air contaminants to downwind locations. During transport, the plume undergoes a reduction in air concentration, not only though dispersion, but also from plume depletion processes. These processes include radioactive decay, precipitation scavenging, and dry deposition. However, because of the long half-lives of the radionuclides released, and because of the relatively dry climate in eastern Washington, only the dry deposition removal process has an appreciable effect on the resulting downwind air concentration. For this analysis, a dry deposition velocity of 0.0018 m/s was used for all radionuclide particulates as suggested by Moore, et al. (1979). This is conservative. Any thermally driven plume rise would cause more dilution and dispersion than the computer model now predicts.

Historically, the MEI was located at the facility boundary where it was hypothetically possible for a person to reside continuously and raise all food consumed. In December 1989, the EPA promulgated new regulations (40 CFR 61, Subpart H) (EPA 1989a) that redefined the MEI to be the maximum exposure to a member of the public at an actual school, business, or residence. In this analysis, boundary locations are used for MEI distances. As such, calculated doses will, in general, be greater than those for actual resident/worker locations at greater distances and will represent a conservatively high estimate of the MEI dose.

The MEI was found to occur in the east wind direction sector from the UO_3 facility at a distance of 24.26 km. That distance represents the east side of the Columbia River. Several actual residences are located there. Consequently, the MEI location actually is a Hanford Site boundary location. No additional distance beyond the boundary can be credited to the MEI exposure location for UO_3 releases as a result of the new EPA regulations. However,

facilities at other Hanford Site locations may be affected depending on the location of public residences to the east, north, and south of the reservation boundary. Table 4-3 shows the distance from the UO_3 Plant to the MEI/boundary locations used to assess the MEI location.

CAP-88 incorporates dose conversion factors from the International Commission on Radiation Protection (ICRP) 26/30 methodology (DOE 1988b and 1988c). Resulting doses are a 50-yr committed EDE.

4.1.4.1 Meteorological Data. A joint frequency distribution of wind direction, wind speed class, and Pasquill stability class were used to calculate wind data for the CAP-88 code. The wind data were measured at the 10-m level of the Hanford Site meteorological tower located between the 200 East and 200 West Areas. Although all three stacks analyzed are taller than the 10-m measurement, the 10-m data were used because the plume ultimately disperses near ground levels where the MEI is located. In addition, the 10-m wind is slower than the prevailing winds at stack height and, therefore, yields a conservatively higher dose. The data were used to calculate reciprocal and true averaged wind speeds, frequency of occurrence of wind direction, and frequency of occurrence of wind stability class in each of 16 wind direction sectors. Table 4-4 shows the most general wind data calculated from the joint frequency distribution.

Additional meteorological data used by CAP-88 included the average mixing height, which limits the extent of vertical dispersion. An average annual value of 1,120 m was calculated as the average of the winter and summer mixing heights of 240 m and 2,000 m, respectively, as given by Slade (1968) for eastern Washington.

4.1.4.2 CHI/Q Values. Using the 16-MEI exposure distances shown in Table 4-3 and meteorological data described in Section 4.1.4.2, the MEI location was analyzed using the CAP-88 code. The code calculates a ground-level CHI/Q value (i.e., air concentration per unit source release) in each of the 16 wind direction sectors. The greatest CHI/Q value at the MEI distance calculated for each sector represents the MEI location. Table 4-5 shows the CHI/Q values calculated for the 16 sectors around the UO_3 Plant. A maximum CHI/Q value of 4.1×10^{-8} s/m^3 was calculated to occur in the east sector at a distance of 24.26 km.

4.1.4.3 Radiological Dose Assessment. During normal operations in standby mode at the UO_3 Plant, the only releases from the exhaust stacks are small quantities of radionuclides, as summarized in Table 4-2. An MEI was found to occur in the east sector from the UO_3 Plant at a distance of 24.26 km downwind at the Hanford Site boundary on the east side of the Columbia River. Several public residences are located at that point.

Table 4-3. Distances from the UO_3 Facility to the Hanford Site Boundary.

Direction	Distance (km)
N	20.12
NNW	18.34
NW	17.16
WNW	18.93
W	18.64
WSW	18.93
SW	17.16
SSW	15.09
S	14.79
SSE	20.71
SE[1]	24.55
ESE[1]	30.17
E[1]	24.26
ENE	24.55
NE	32.54
NNE	30.77

NOTE: Distances to actual public residences are the same as to boundary location.

9 1 1 2 3 5 5 2 0 2 6

Table 4-4. Summary of UO_3 Wind Data.[1]

Sector	Wind direction[2] frequency of occurrence	Average wind speed (m/s)
N	0.042	1.44
NNW	0.034	1.32
NW	0.038	1.23
WNW	0.034	1.04
W	0.035	1.05
WSW	0.024	1.16
SW	0.027	1.06
SSW	0.036	1.22
S	0.060	1.21
SSE	0.065	1.45
SE	0.143	2.40
ESE	0.155	2.57
E	0.128	2.05
ENE	0.080	2.05
NE	0.057	2.37
NNE	0.038	2.01

[1]Data calculated from Joint Frequency Distribution for the 200 Area Meteorological Station at the 10-m level.

[2]Wind direction is toward the indicated sector from a central point location.

9 1 1 2 3 6 5 2 0 2 7

Table 4-5. CHI/Q Values for the 16 Wind Sectors Surrounding UO_3.

Direction	CHI/Q (s/m^3)
N	2.0 E-08
NNW	1.7 E-08
NW	2.1 E-08
WNW	1.7 E-08
W	1.6 E-08
WSW	9.2 E-09
SW	1.2 E-08
SSW	1.7 E-08
S	3.1 E-08
SSE	2.3 E-08
SE	3.2 E-08
ESE	3.1 E-08
E*	4.1 E-08
ENE	2.3 E-08
NE	1.1 E-08
NNE	8.7 E-09

*Represents the maximum CHI/Q and the sector containing the MEI for releases from the 296-U-4 stack.

9 1 1 2 2 5 5 2 0 2 8

A total dose of 3.76×10^{-6} mrem EDE was assessed for the MEI location described above as a result of releases from all three UO_3 Plant stacks analyzed. This total dose is well below the EPA annual dose criterion (40 CFR 61, Subpart H) (EPA 1989a) of 1.0×10^{-1} mrem to the MEI via the air pathway. This total dose is not used to establish monitoring requirements, but rather it is used for emission compliance purposes for the total facility releases.

Table 4-6 summarizes the individual stack contributions to the MEI dose from each UO_3 Plant stack. As noted in Table 4-6, any stack with an individual dose greater than the EPA standard of 1.0×10^{-1} mrem, or 1% of 10 mrem/yr, is required to have continuous radiation monitoring. This continuous radiation monitoring is an EPA designation, but is fully met by continuous sampling followed by periodic analysis. The greatest dose from any UO_3 Plant stack effluent is from the main stack (296-U-4), which independently contributes nearly all (98.5%) of the dose of 3.8×10^{-6} mrem to the MEI. This dose is well below the 1.0×10^{-1} mrem annual dose standard for required continuous monitoring, designated by the EPA.

The MEI dose resulted primarily from the inhalation of U-234 originating from the main exhaust stack at the UO_3 Plant (296-U-4). Inhalation of ^{239}Pu and ^{241}Am also contributed a significant percentage of the dose. Table 4-7 summarizes the most significant radionuclides and their dose contributions to the MEI. As noted in Table 4-7, any stack containing radionuclides that individually contribute 10% of the dose from a release point which could exceed the EPA annual dose of 1.0×10^{-1} mrem EDE, must be selectively monitored for those radionuclides. None of the stacks exceed the EPA annual dose and, therefore, no specific radionuclide analysis is required.

4.1.4.4 Unmitigated Releases. Applicable EPA regulations require that a dose to the MEI be calculated from an unmitigated release. The unmitigated release is that which occurs if all air pollution control equipment fails or is removed. At the UO_3 Plant, this means a dose resulting from the unfiltered flow from each of the stack effluents, as described in Table 4-8. The filtering efficiency varies for different stacks. Monitoring of the effluent stream is not performed before the stream passes the HEPA filters. Consequently, the increase in effluent radionuclides caused by filter removal is based on an evaluation of filter efficiencies and particulate removal processes. Stacks 296-U-2 and 296-U-13 exhaust through HEPA filters. A realistic increase in particulate effluent caused by filter removal is 3.0×10^3 for those stacks. The main stack (296-U-4) exhausts without HEPA filtration and will not increase particulate emissions in an unmitigated release scenario because there is no filtration system to fail.

The dose calculated for the MEI is directly proportional to the amount of radioactive material released. Because all particulate releases are increased by the same amount in a given stack, the resulting unmitigated dose is the MEI dose increased by an unmitigated release factor of 3.0×10^3 for stacks 296-U-13 and 296-U-2. The release for the main stack, 296-U-4, remains unchanged.

Table 4-6. Doses to the Maximally Exposed Individual from Routine Standby Mode Releases.

Stack reference	Effective dose equivalent (rem)	Stack contribution to MEI dose (%)	Standard for* required monitoring (rem)
296-U-4	1.1 E-08	99.54	1.0 E-04
296-U-2	2.7 E-11	0.24	1.0 E-04
296-U-13	2.4 E-11	0.22	1.0 E-04
Total	1.1 E-08	100.0	

*Dose standard for total radioactivity effluent monitoring from 40 CFR 61, Subpart H (EPA 1989a).

Table 4-7. Individual Radionuclide Doses to the Maximally Exposed Individual from Routine Standby Mode Releases.

Stack reference	Most significant radionuclide(s)	Radionuclide dose (rem)	Dose threshold for individual radionuclide monitoring (rem)
296-U-4	^{234}U ^{239}Pu ^{241}Am	6.7 E-09 1.3 E-09 2.5 E-09	1.0 E-04 1.0 E-04 1.0 E-04
296-U-2	^{234}U ^{239}Pu ^{241}Am	2.6 E-11 1.4 E-13 3.2 E-13	1.0 E-04 1.0 E-04 1.0 E-04
296-U-13	^{234}U ^{239}Pu ^{241}Am	2.0 E-11 1.2 E-12 2.6 E-12	1.0 E-04 1.0 E-04 1.0 E-04

Table 4-8. Doses to the Maximally Exposed Individual from an Unmitigated Release.

Stack reference	Effective dose equivalent (mrem)	Unmitigated release factor	Unmitigated effective dose equivalent (mrem)	Dose standard for* required monitoring (mrem)
296-U-4	1.1 E-08	1.0	1.1 E-08	1.0 E-04
296-U-2	2.7 E-11	2.0 E+03	5.4 E-08	1.0 E-04
296-U-13	2.4 E-11	2.0 E+03	4.8 E-08	1.0 E-04

*Dose standard for total radioactivity effluent monitoring from 40 CFR 61, Subpart H (EPA 1989a).

Table 4-9 summarizes the contributions to the unmitigated MEI dose from each UO_3 Plant stack. As noted in Table 4-8, any stack with an individual annual dose greater than the EPA standard of 1.0×10^{-1} mrem is required to have a minimum of continuous sampling and subsequent analysis. None of the stacks have unmitigated dose consequences that are in excess of this standard.

The unmitigated MEI dose resulted primarily from the inhalation of ^{234}U originating from 296-U-2 and 296-U-13. Table 4-9 summarizes the most significant radionuclides and their dose contributions to the MEI from an unmitigated release. As noted in Table 4-9, any radionuclides that contribute more than 10% of the EDE for the stack release, if above 1.0×10^{-1} mrem EDE, must be selectively monitored at the exhaust point. None of the stacks have unmitigated releases that exceed the 1.0×10^{-1} mrem EDE standard. No radionuclide selective analysis is required.

The UO_3 facility conducted operational campaigns during 1988 and 1989. Operational campaign periods were performed February 1 through 6, 1988, April 17 through 27, 1989, and May 8 through 17, 1989. Monthly radioactive air emissions data (i.e., total volume releases in Curies) have been documented in the 1988 and 1989 annual air emissions reports (WHC 1989b and WHC 1990a, respectively). Tables 4-10, 4-11, and 4-12 show the results of the offsite dose calculations for comparison with the shutdown mode, using the 1988 to 1989 total release data.

Table 4-9. Individual Radionuclide Doses to the Maximally Exposed Individual from an Unmitigated Release.

Stack reference	Most significant radionuclide(s)	Radionuclide dose (mrem)	Unmitigated release factor	Unmitigated radionuclide dose (mrem)	Dose* threshold for individual radionuclide monitoring (mrem)
296-U-4	^{234}U	6.7 E-09	1.0	6.7 E-09	1.0 E-04
	^{239}Pu	1.3 E-09	1.0	1.3 E-09	1.0 E-04
	^{241}Am	2.5 E-09	1.0	2.5 E-09	1.0 E-04
296-U-2	^{234}U	2.6 E-11	2.0 E+03	5.2 E-08	1.0 E-04
	^{239}Pu	1.4 E-13	2.0 E+03	2.8 E-10	1.0 E-04
	^{241}Am	3.2 E-13	2.0 E+03	6.4 E-10	1.0 E-04
296-U-13	^{234}U	2.0 E-11	2.0 E+03	4.0 E-08	1.0 E-04
	^{239}Pu	1.2 E-12	2.0 E+03	2.4 E-09	1.0 E-04
	^{241}Am	2.6 E-12	2.0 E+03	5.2 E-09	1.0 E-04

*Dose standard for individual radionuclide effluent monitoring from 40 CFR 61, Subpart H (EPA 1989a).

Table 4-10. Dose to Maximally Exposed Individual During February 1 through 6, 1988.

U Plant stack number	Radionuclide	Feb 1988 (Ci)	Dose factors (mrem/Ci)		Treatment factor CAP-88	Mrem dose/yr	
			GENII	CAP-88		GENII	CAP-88
296-U-2	Gr Alpha	6.76 E-09	1.50 E+00	1.55 E+00	3 E+03	1.01 E-08	3.14 E-05
	Gr Beta	5.09 E-08	8.00 E-03	7.82 E-03	3 E+03	4.07 E-10	1.19 E-06
					Total	1.05 E-08	3.26 E-05
296-U-4	Gr Alpha	5.87 E-07	1.50 E+00	1.55 E+00	1 E+00	8.80 E-07	9.10 E-07
	Gr Beta	1.75 E-06	8.00 E-03	7.82 E-03	1 E+00	1.40 E-08	1.37 E-08
					Total	8.94 E-07	9.24 E-07
296-U-13*	Gr Alpha	2.24 E-08	3.60 E+00	5.15 E+00	3 E+03	8.06 E-08	3.46 E-04
	Gr Beta	7.68 E-08	2.00 E-02	2.60 E-02	3 E+03	1.54 E-09	5.99 E-06
					Total	8.22 E-08	3.52 E-04

*Both Alpha and Beta were less than numbers.

Table 4-11. Dose to Maximally Exposed Individual During April 17 through 27, 1989.

U Plant stack number	Radionuclide	April 1989 Ci	Dose factors (mrem/Ci)		Treatment factor CAP-88	Mrem dose/yr	
			GENII	CAP-88		GENII	CAP-88
296-U-2	Gr Alpha	1.50 E-08	1.50 E+00	1.55 E+00	3 E+03	2.25 E-08	6.98 E-05
	Gr Beta	2.52 E-08	8.00 E-03	7.82 E-03	3 E+03	2.02 E-10	5.91 E-07
					Total	2.27 E-08	7.03 E-05
296-U-4	Gr Alpha	5.54 E-07	1.50 E+00	1.55 E+00	1 E+00	8.31 E-07	8.59 E-07
	Gr Beta	1.95 E-06	8.00 E-03	7.82 E-03	1 E+00	1.56 E-08	1.52 E-08
					Total	8.47 E-07	8.74 E-07
296-U-13*	Gr Alpha	1.82 E-08	3.60 E+00	5.15 E+00	3 E+03	6.55 E-08	2.81 E-04
	Gr Beta	6.23 E-08	2.00 E-02	2.60 E-02	3 E+03	1.25 E-09	4.86 E-06
					Total	6.68 E-08	2.86 E-04

*Both Alpha and Beta were less than numbers.

Table 4-12. Dose to Maximally Exposed Individual During May 8 through 17, 1989.

U Plant Stack Number	Radionuclide	May 1988 Ci	Dose factors (mrem/Ci)		Treatment factor CAP-88	Mrem dose/yr	
			GENII	CAP-88		GENII	CAP-88
296-U-2	Gr Alpha	2.61 E-08	1.50 E+00	1.55 E+00	3 E+03	3.91 E-08	3.14 E-05
	Gr Beta	3.91 E-08	8.00 E-03	7.82 E-03	3 E+03	3.13 E-10	9.17 E-07
					Total	3.95 E-08	1.22 E-04
296-U-4	Gr Alpha	2.74 E-06	1.50 E+00	1.55 E+00	1 E+00	4.11 E-06	4.25 E-06
	Gr Beta	1.01 E-05	8.00 E-03	7.82 E-03	1 E+00	8.08 E-08	7.90 E-08
					Total	4.19 E-06	4.33 E-06
296-U-13*	Gr Alpha	2.38 E-08	3.60 E+00	5.15 E+00	3 E_03	8.57 E-08	3.68 E-04
	Gr Beta	8.15 E-08	2.00 E-02	2.60 E-02	3 E+03	1.63 E-09	6.36 E-06
					Total	8.73 E-08	3.74 E-04

*Both Alpha and Beta were less than numbers.

4.2 IDENTIFICATION AND CHARACTERIZATION OF SOURCE TERMS CONTRIBUTING TO EACH WATER EFFLUENT STREAM

There are two liquid waste streams at the UO_3 Plant: process condensate and plant wastewater.

4.2.1 Discharge Descriptions

The UO_3 water effluents are described in detail in two stream-specific reports that were written to reflect the UO_3 Plant in its operating and standby modes (WHC 1990b). The compositions of the streams are given in Table 4-13. Composition data are the upper limits of the 90 Percent Confidence Interval as given in the stream-specific reports (WHC 1990b). Table 4-13 also indicates the average flow rate, point of discharge and stream-specific report number for each stream.

4.2.2 Routine Operating Conditions

4.2.2.1 Process Condensate. The process condensate discharge consists almost entirely of condensates formed when process off-gas streams pass through either of two vessel vent condensers. The cooling water used by these condensers is the major component of the UO_3/U Plant wastewater effluent. All condensates drain into the condensate collection Tank C-9. From the tank, batches of condensate are pumped to a neutralization tank where a buffering agent (phosphoric acid) is added and the condensate is brought to neutral pH using potassium hydroxide.

The process condensate has many contributors (Figure 4-1) and is subject to entrained chemicals in mists, volatile species which cocondense with water and compounds present in the sanitary water. Sanitary water is added when required, to ensure uninterrupted flow to the acid absorber tower. A detailed description of the process condensate is given in the stream-specific report for this effluent (WHC 1990b).

The data compiled in the process condensate stream-specific report represent five samples that were collected during a 7-mo period in 1988. One sample was collected during uranium calcination operations, while the remaining four samples were collected during standby conditions. Evaluation of these data indicated that the process condensate did not contain any dangerous wastes, as defined by WAC 173-303-070 (WAC 1989a). A full discussion of the chemicals detected in the samples, the reported concentrations of these chemicals, analytical detection limits, and the pertinent regulatory limits is contained in the stream-specific report (WHC 1990b). A summary of the statistical data from the report are presented in Table 4-13.

The process condensate flow rate is rather consistent during the standby mode, with only slight variations. The average standby flow rate reported in the stream-specific report (WHC 1990b) is $5.0 \times 10^{+4}$ L/mo. The extrapolated average monthly flow rate for calcination operating mode is $9.2 \times 10^{+5}$ L/mo based on a short calcination period.

Table 4-13. Summary of UO_3 Plant Liquid Effluents.[a] (4 sheets)

Analyte	U/UPW[e]	PPC[e] Calc	PPC[e] Standby
Inorganic Compounds - Metals[b]			
Aluminum			
Antimony			
Arsenic			
Arsenic (EP Toxic)	<500		
Barium	30	8	
Barium (EP Toxic)	<1,000		
Beryllium			
Boron	28.5		
Cadmium		2	
Cadmium (EP Toxic)	<100		
Calcium	1.8 E+04		
Chromium		108	34.5
Chromium (EP Toxic)	<500		
Copper	26.7		
Iron	33.3		69.6
Lead			
Lead (EP Toxic)	<500		
Magnesium	4.5 E+03		
Manganese	7	9	
Mercury		3.7	
Mercury (EP Toxic)	<20	3.7	1.6 E-01
Nickel		55	24.9
Potassium	745	1.2 E+07	5.5 E+05
Selenium			
Selenium (EP Toxic)	<500		
Silicon	2.2 E+03		
Silver			
Silver (EP Toxic)	<500		
Sodium	2.1 E+03	2.2 E+04	9.4 E+02
Strontium	97.8		
Thallium	6.3		
Uranium	2.4	419	65.5
Zinc	5.7	11	5.7

Table 4-13. Summary of UO_3 Plant Liquid Effluents.[a] (4 sheets)

Analyte	U/UPW[e]	PPC[e] Calc	PPC[e] Standby
Inorganic compounds - Ionic Species[b]			
Ammonium	58.6		96
Chloride	9.7 E+02		8.4 E+02
Cyanide			213
Fluoride	137	2.5 E+04	1.0 E+03
Fluoride (IC)			
Fluoride (ISE)			
Nitrate	564	1.5 E+07	5.4 E+05
Nitrite			
Phosphate		2.7 E+05	2.6 E+05
Sulfate	1.1 E+04		1.8 E+05
Organic Compounds[b]			
Acetone		23	273
Benzoic acid		14	
1-Butanol		5	
2-Butanone		12	27.8
2-Butoxyethanol		58	
Chloroform			
Butyl Nitrate		44	
t-4-Chlorocyclohexanol		78	
Methyl nitrate		66	
2-Methyl-5-propylnonane		5	
Nitroethane		43	
n-Nitrosodimethylamine		4	
Phenanthene			66
Other parameters[b]			
Alkalinity	5.9 E+04		
Conductivity (µS)	136		
Ignitability (°F)[c]	199		
pH (dimensionless)	6.6	7.13	7.51
Reac cyanide (mg/kg)	<100		
Reac sulfide (mg/kg)	<100		
TDS	7.5 E+04		
Temperature (°C)	14.6	26.2	30.1

Table 4-13. Summary of UO_3 Plant Liquid Effluents.[a] (4 sheets)

Analyte	U/UPW[e]	PPC[e] Calc	PPC[e] Standby
TOC	1.1 E+03	6.4 E+03	1.18 E+03
Total carbon	1.6 E+04		
TOX (as Cl)	13.8	21.8	83.1
Radionuclides[d]			
Total alpha	3.6	447	0.9
Total beta	2.5	7.1 E+03	816
Radium (226 + 228)			
Gross uranium-natural			
^{3}H			
^{60}Co	1.14		
^{14}C			
^{90}Sr			
^{106}Ru			
^{113}Sn			
^{129}I			
^{137}Cs			
$^{144}Ce/Pr$			
^{147}Pm			
^{234}U	1.16		
^{235}U	1.3 E-01		
^{238}Pu			
^{238}U	8.7		
$^{239,240}Pu$	6.1 E-03		
$^{239,240}U$			
^{241}Am			
Stream-Specific Report WHC-EP-0342 (WHC 1990b) addendum number	Addendum 7	Addendum 19	Addendum 19

Table 4-13. Summary of UO_3 Plant Liquid Effluents.[a] (4 sheets)

Analyte	U/UPW[e]	PPC[e] Calc	PPC[e] Standby
Approximate average flow rate (L/mo)	Flow rates dependent upon process activities - range from 1.8 E+07 to 2.6 E-07	9.2 E+05 L/mo	5.0 E+0.4 L/mo
Discharge point	216-U-4 Ditch (w side of UO_3/U plant)	Storage tanks at UO_3 Plant	Storage tanks at UO_3 Plant

NOTES:

[a]Analyte concentrations represented by the 90% confidence interval limit (the upper limit of the one-tailed 90% confidence interval for all data sets) as reported in the appropriate stream-specific report. When a 90% confidence interval limit was not calculated, the maximum observed result is listed. Exception is PPC Calc where mean values are listed.

[b]Effluent concentrations expressed as micrograms per liter unless indicated otherwise.

[c]Ignitability temperatures are represented by the lower limit of the one-tailed 90% confidence interval for all data sets.

[d]Effluent concentrations for radionuclides expressed as picocures per liter.

[e]Abbreviations used:

U/UPW = UO_3/U Plant Wastewater
PPC = Plant Process Condensate
Calc. = Calcination operation
Standby = Standby mode
Reac = reactive
TDS = total dissolved solids
TOC = total organic carbon
TOX = total organic halides
µS = microsiemen
IC = fluoride analysis using ion chomatography technique
ISE = fluoride analysis using ion-specific electron technique

Figure 4-1. Contributors to UO_3 Plant Process Condensate.

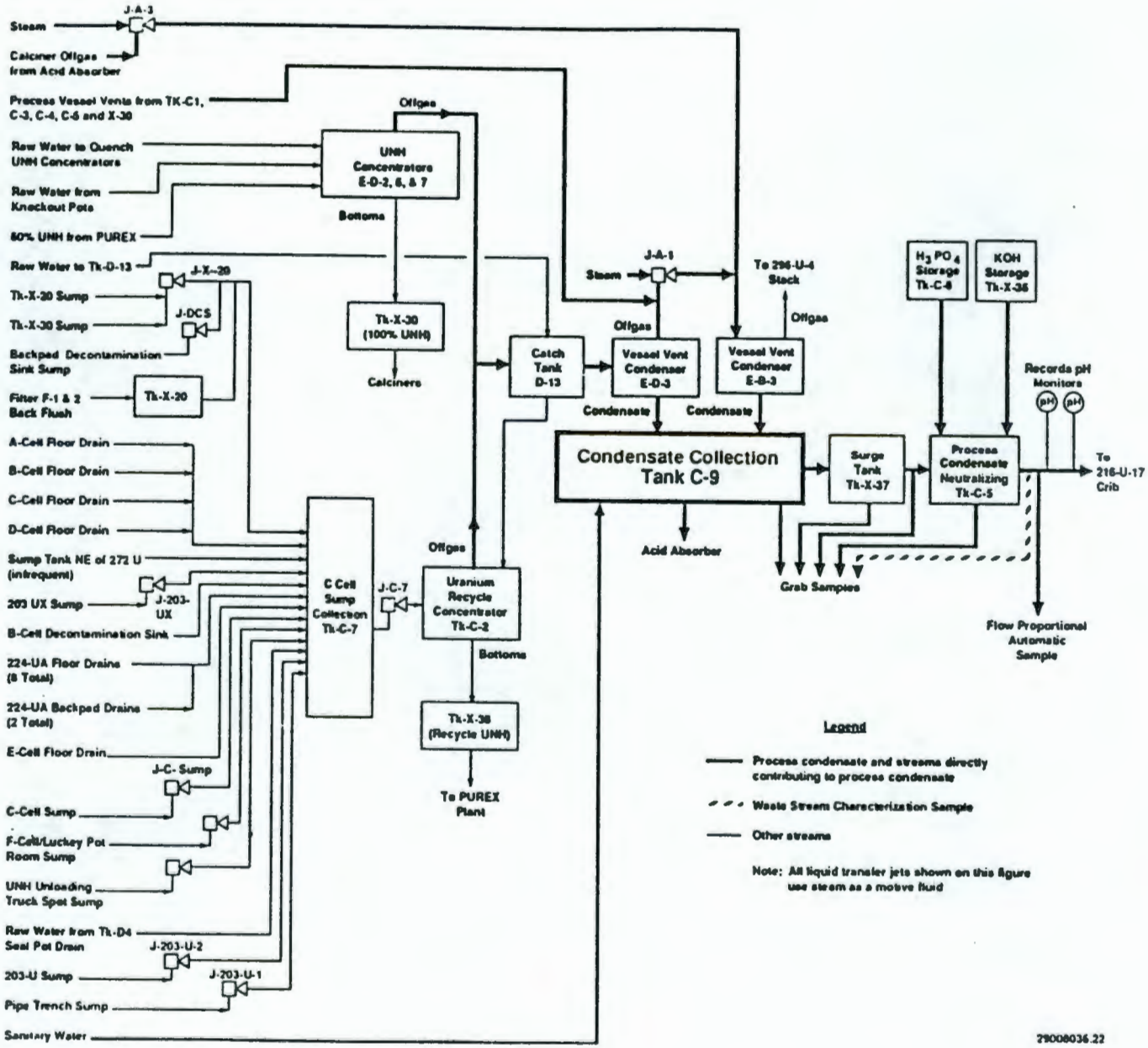

4.2.2.2 UO_3/U Plant Wastewater. The UO_3/U Plant wastewater (U/UPW) during standby consists almost entirely of either raw or sanitary water used as cooling water for condensers or compressors. A small quantity of steam condensate from building or tank heaters also contributes to the flow. The raw water that is used, either directly or processed into steam or sanitary water, is derived from the Columbia River. The effluents are collected into a common discharge line on the west side of the UO_3/U Plant (Figure 4-2).

This wastewater stream is designed to be an uncontaminated stream. Except for off-normal conditions such as catastrophic equipment failure, none of the contributing sources comes directly into contact with any process fluids. No chemicals are added to the U/UPW in the UO_3/U Plant. A detailed description of the U/UPW is given in the stream-specific report for this effluent (WHC 1990b).

The data compiled in the U/UPW stream-specific report (WHC 1990b) represent four samples that were collected while the UO_3/U Plant was in standby mode. The evaluation concluded that the U/UPW did not contain any dangerous wastes, as defined by WAC-173-303-070 (WAC 1989a). A full discussion of the chemicals detected in the samples, the reported concentrations of these chemicals, analytical detection limits, and the pertinent regulatory limits is contained in the stream-specific report (WHC 1990b). A summary of the statistical data from the report was presented in Table 4-13.

The U/UPW flow rate is dependent upon process activities; the flow rates reported in the stream-specific report (WHC 1990b) ranged from $1.8 \times 10^{+7}$ to $2.6 \times 10^{+7}$ L/month. This range will be maintained while the UO_3/U Plant is in standby. Until the Treated Effluent Disposal Facility (TEDF) and Best Available Technology (BAT) systems are complete, the U/UPW will continue to be discharged to the 207-U Retention Basin and 216-U-14 Ditch.

4.2.3 Upset Operating Conditions

4.2.3.1 Process Condensate. Because process condensate is currently collected in tanks in the UO_3 Plant and is monitored from those collection locations, no upset conditions exist. If the use of the U-17 Crib is reauthorized, the discharge will be monitored at the neutralization tank before the effluent is released. Therefore, no upset conditions are expected to occur.

4.2.3.2 UO_3/U Plant Wastewater. The plant wastewater stream routinely discharges through either section of the 2-section 207-U Retention Basin and then into the 216-U-14 Ditch. In-line monitoring for pH upstream of the 207-U Retention Basin allows manual isolation and treatment of off-normal conditions before disposal. Detection of hazardous chemicals or of the low radionuclide content is through analysis of periodic samples.

At present, the only mitigating control on the UO_3 Plant wastewater discharge is flow-proportional sampling followed by laboratory analysis with the capability for manual diversion to an alternative retention basin. Therefore, the existing monitoring system is not adequate for detecting

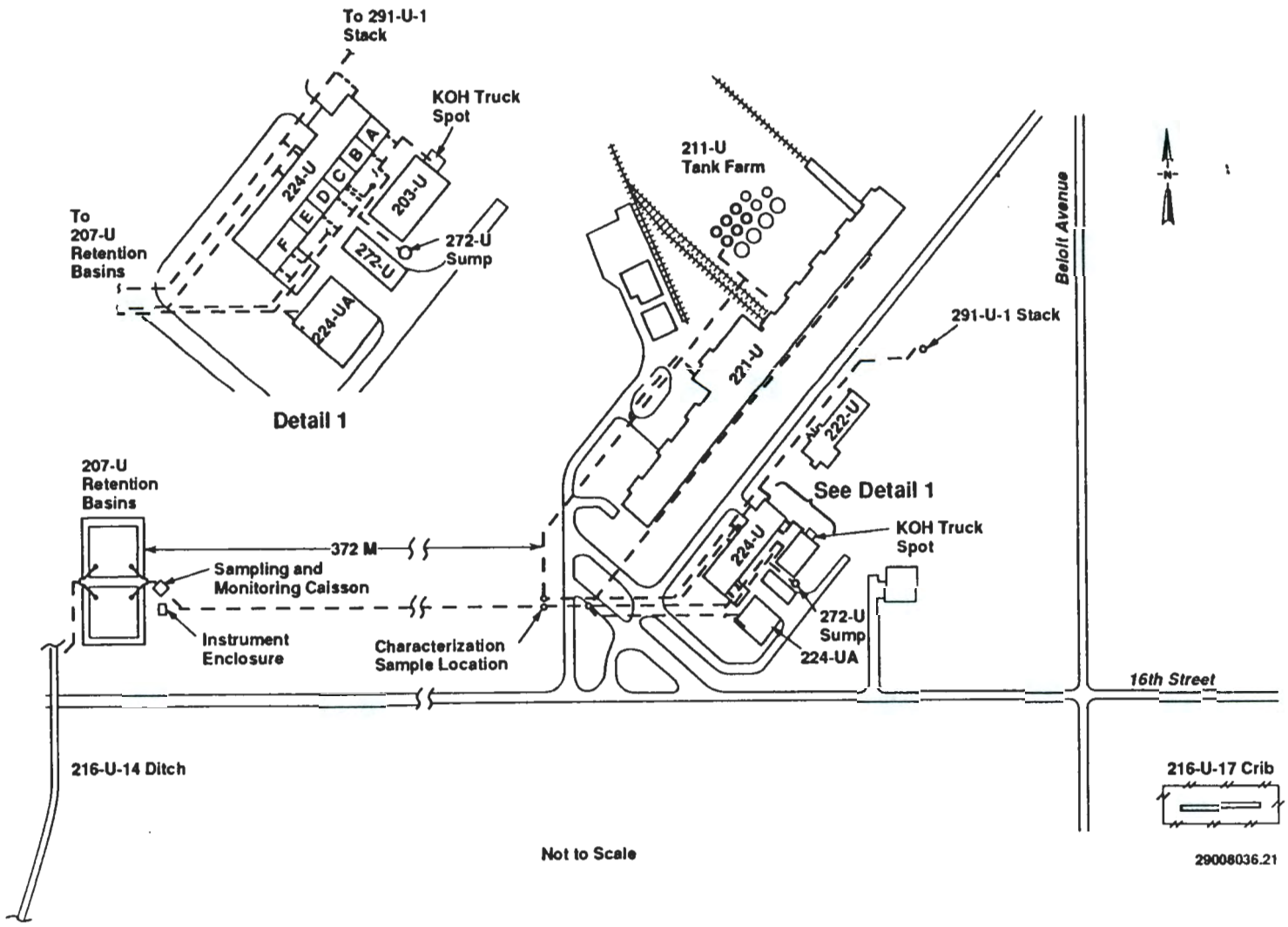

Figure 4-2. UO_3/U Plant Wastewater Routing.

releases that exceed the discharge criteria. An engineering study has been initiated to determine alternatives to detect equipment failure that could contaminate the wastewater stream.

4.2.4 Liquid Effluent Criteria

The UO_3 Plant wastewater and UO_3 process condensate (after final polishing) will be discharged to a State Approved Land Disposal Structure (SALDS) (Crane 1991). This is the currently recommended option. The acceptance criteria for a SALDS then dictates the discharge criteria for UO_3 Plant wastewater and the polished process condensate.

Based on Ecology guidance, a SALDS will consider an effluent that is below the most restrictive criteria acceptable for soil column discharge. A listing of the most restrictive criteria has been prepared for the purposes of establishing acceptance criteria. (This list is reproduced in Section 16.2.) The most restrictive single value for each parameter is also given in the comparison Table 4-13.

The listing does not contain numerical limits for all potential contaminants. However, it does contain limits for regulated constituents that could possibly be found in the UO_3 Plant wastewater effluents. To be acceptable for discharge to the SALDS, the radionuclide content of each wastestream will be required to meet the intent of the State's groundwater standards and limit annual public exposure to an EDE not to exceed 4 mrem/yr. The numerical values shown in the listing are 4% of the Derived Concentration Guides (DCG) (DOE 1990a) which represent an annual EDE of 100 mrem.

5.0 EFFLUENT POINT OF DISCHARGE DESCRIPTION

This section describes the point of discharge for both the air and liquid effluents.

5.1 AIR EFFLUENTS

The three active air exhaust stacks dimensions were summarized in Table 4-1. The location of each stack is shown in Figure 2-2. All (296-U-2, 296-U-4, and 296-U-13) are located on the bottom center of the page.

5.2 WATER EFFLUENTS

The composition, flow rates and discharge points of the two liquid effluents were summarized in Table 4-10. The location of each discharge point can be seen on Figure 2-1 and are located on the bottom half of the page (216-U-14 Ditch and 203-U Storage Tank Enclosure).

This page intentionally left blank.

9 1 1 2 2 4 3

6.0 EFFLUENT MONITORING/SAMPLING SYSTEM DESIGN CRITERIA

Design criteria of a system or equipment states the functional requirements that must be met.

6.1 NEW FACILITIES

No new facilities or modifications to the existing equipment are being implemented or are currently planned for the monitoring systems at the UO_3 Plant. Therefore, there are no design criteria.

6.2 EXISTING FACILITIES

The equipment used to create both the air and liquid monitor/sample systems for the UO_3 Plant is to meet the following common design criteria; the equipment must be accurate, rugged, and low maintenance.

6.2.1 Air Effluent Design Criteria

Additional specific criteria that apply to the air effluents are the requirements to accomplish the following:

- Sense pressure drop across the HEPA filters
- Take continuous air samples with isokinetic sampling probes, filter holders, and vacuum pumps
- Detect and alarm upon a loss of ventilation flow in any individual effluent.

6.2.2 Water Effluent Design Criteria

Additional specific criteria that apply to the process condensate water effluent do not exist. As flow is routed to storage tanks for temporary holding, no monitoring system is required. Only tank access for sampling is required. Samples of the tank contents provide detailed information on the effluent composition.

Additional specific criteria that apply to the UO_3 wastewater effluent are the requirements to monitor pH continuously with an alarm function for out-of-specification pH and a flow proportional sampler.

9 1 1 2 3 5 5 2 0 4 4

This page intentionally left blank.

9 1 1 2 1 2 0 4 5

7.0 CHARACTERIZATION OF CURRENT EFFLUENT MONITORING SYSTEM

Sampling and monitoring systems must be capable of verifying compliance with the discharge criteria for the specific effluent stream. Air monitoring/sampling requirements are well defined in 40 CFR 61, NESHAP (EPA 1989a). Currently, liquid effluent sampling and monitoring are used to verify compliance with discharge criteria for effluents discharged to the 207-U Retention Basin and the 216-U-14 Ditch for wastewater. After 1996, liquid effluents must meet the more restrictive SALDS criteria (Crane 1991). Samples are analyzed at the 222-S Laboratory. Sampling and monitoring of the air and liquid effluents will be conducted in accordance with the current standard operating procedures, WHC-CM-7-5 (WHC 1991a).

7.1 AIR EFFLUENT MONITORING SYSTEM DESCRIPTION AND SPECIFICATIONS

The descriptions of the air effluent monitoring/sampling program and associated equipment used at UO_3 Plant are compiled from information included in engineering drawings (WHC 1982, 1991b), and existing effluent monitoring plans (WHC 1989a).

The FEMP determination analysis (WHC 1990c), which was based on the requirements of 40 CFR 61 (EPA 1989a), concludes that continuous monitoring (as defined by EPA but is fully met by continuous sampling and periodic analysis) is not required for the three UO_3 stacks. Periodic effluent monitoring and sampling should be conducted, however, to verify the low concentrations of radionuclides constituents in the air effluent streams.

No stack at UO_3 Plant requires monitoring for nonradiological hazardous or EPA criteria pollutants during standby mode.

7.1.1 296-U-4 Stack

7.1.1.1 General Description. The 296-U-4 stack system exhausts cooled air from the process off-gas system. This off-gas is composed of process tank vents, calciner off-gases and vapor from the UNH concentrators. The EB-3 and ED-3 condensers are used to remove most condensables before discharge. Flow through the stack is supplied by a 225-psig steam jet, a 125-psig steam jet, and a 2,200 ft^3/min air blower. The blower, exhausting about 2,200 ft^3/min of air out of B-Cell, is used in conjunction with the jets to provide adequate air flow out of the stack. Isokinetic record sampling and NO_x sampling and monitoring capabilities are provided for this stack.

The 296-U-4 stack, extending 80 ft above the 224-U roof, is composed of 10-in., Schedule 20, Type-347, stainless steel pipe resting on the junction of a 1-ft, 20-in., concrete roof beam with a 10-ft shield wall that separates the canyon from the gallery portion of 224-U. It is supported at 40 ft and 64 ft above the roof by four guy wires.

7.1.1.2 Instrumentation and Controls Specifications. The major parameters that are controlled in the 296-U-4 off-gas system are the temperature entering and exiting the acid absorbers, and the exhaust temperature of the EB-3 and ED-3 condensers.

7.1.1.2.1 Operating. The temperature of the gas entering and exiting the NO_x absorber is maintained between the values of 15 °C to 45 °C. If the temperature lies outside of this range, the cooling water flow to the gas cooler and NO_x absorber is checked.

The primary purpose for the X-14 blower is to maintain a high gas velocity through the stack. The stack is monitored for flow and is equipped with both low-and high-flow alarms.

The ED-3 condenser is used to remove any of the remaining condensable gases/vapors from the concentrator exhaust. To ensure that the majority of these gases is removed, the off-gas temperature of the ED-3 condenser is monitored. If the temperature of this stream exceeds the set point, the cooling water flow is increased. If the problem continues, further investigation is initiated until the problem is solved.

The 296-U-4 stack is also equipped with a device to monitor NO_x. The monitor has two high-concentration alarm points; a high alarm set at 2.5% volume, and a high/high alarm set at 3.5% volume. If the high alarm is activated, plant personnel seek to correct the problem. This entails checking the cooling water flow to the gas cooler and absorber, gas flow rates through the NO_x absorber, and the reflux flow through the NO_x absorber. If the problem cannot be corrected, or if the high/high alarm sounds, the plant is shut down until the problem can be found and corrected.

Limitations and approval conditions governing the UO_3 Plant NO_x emission were established by the EPA in PSD Permit No. PSD-X80-14 (EPA 1980a). These limitations and conditions are as follows:

- The NO_x concentration at the exit of the final condenser, upstream of dilution air addition, shall be no more than 4% volume; the NO_x emissions shall be no more than 858 kg/d or 50 metric tons/yr.

- The DOE shall notify the Benton-Franklin-Walla Walla County Air Pollution Control Authority and the EPA of the occurrence of any emission in excess of the limits specified above, within 10 d of its occurrence.

- Compliance with emission limitations shall be demonstrated by source tests and a program of emission monitoring. Compliance testing shall be conducted within 180 d after startup. Continuous stack monitors for NO_x and gas flow rate shall be installed and operated. Before startup, DOE shall submit a monitoring plan for EPA approval, which describes the details of the continuous monitoring equipment installation and operation. The NO_x monitors must meet performance specification requirements of 40 CFR 60, Appendix B, Specification Test 2 (EPA 1990a) describes the details of the continuous monitoring equipment installation and operation.

9 1 1 2 3 6 5 2 0 4 7

The NO_x monitors must meet performance specification requirements of 40 CFR 60, Appendix B, Specification Test 2 (EPA 1990a).

- The EPA and Benton-Franklin-Walla Walla County Air Pollution Control Authority shall be notified within 30 d after the commencement of construction and after the startup of the plant.

7.1.1.2.2 Standby. During standby conditions, the UO_3 Plant acid absorbers, condenser, and NO_x monitor will not be operating. No NO_x is being generated and, therefore, the control system is shut down. Blower and sampler operation will continue.

7.1.1.2.3 Sampler. A near-isokinetic sampler continuously samples the stack. These samples are collected on a weekly basis when the plant is in standby condition. The samples were collected on a daily basis when the plant was operating. A preliminary count of its activity is performed to determine if the sample has the potential to exceed the release limits of the stack. If the sample does exhibit the potential, the sample analysis is rushed providing sample results within 24 h. The stack flow is measured each time it is adjusted, and the sample flow is adjusted correspondingly to ensure near-isokinetic sampling.

7.1.2 296-U-Stack

7.1.2.1 General Description. The 296-U-2 stack is located on the 224-UA roof. The 14-in. x 12-in. rectangular stack is constructed of 16 gauge sheet metal and extends 13 ft above the building roof. A near-isokinetic record sampler is located approximately 2 ft below the top of the stack. Each exhauster (X-32-1 and X-32-2) has a design capacity of 2,000 ft^3/min at 8 in. water vacuum.

This stack exhausts air from the powder handling system. Air for this system originates in the pickup bins. Air is subsequently routed through parallel cyclone separators, primary bag filters, and secondary bag filters (where UO_3 powder is separated from the air), prefilters, and HEPA filters before reaching the exhausters (Figure 2-4). This system is designed so that only one cyclone separator, one primary bag filter, one secondary bag filter, one prefilter, one HEPA filter, and one exhauster are operated at any given time.

7.1.2.2 Instrumentation and Controls Specifications. To prevent the release of any significant quantities of UO_3 particles to the atmosphere, the differential pressure (DP) across the bag filters is controlled while the vacuum of the bag filters and DP of the HEPA filters are monitored.

The DP across the bag filters is controlled between the values listed in Table 7-1. The alarm set points are also listed in Table 7-1. The low-DP alarm indicates the possible failure of a bag. If a bag does fail, the amount of UO_3 particles released to the atmosphere before the plant can be shut down will be minimal because of the presence of the prefilters and HEPA filters downstream of the last bag filter. The high-DP alarm indicates that

Table 7-1. Bag Filter Differential Pressure Control Settings and Alarm Points.

Control settings	Alarm points (in. H_2O)		Control points (in. H_2O)	
	Low	High	Low	High
Primary bag filter	2	10	2.3	7.5
Secondary bag filter	1	7	1.2	6
HEPA filter	N/A	N/A	0.5	2.5

the bag filter has become over-loaded and requires replacement. The high-DP alarm set point for the primary bag filter is currently set above the operating specifications document efficiency limit. Past operation has shown that DPs greater than 10 in. of water have no effect on the filter integrity.

The DP across the HEPA filters is monitored continuously. Each filter assembly is equipped with both low and high-DP alarms (Table 7-1) that inform plant operations that either the HEPA filter has failed or has become loaded and requires replacement.

A near-isokinetic record sampler continuously samples the stack. These samples are collected on a weekly basis. A preliminary count of its activity is performed to determine if the sample has the potential to exceed the release limits of the stack. If the sample does exhibit this potential, the sample analysis is rushed providing sample results within 24 h. The stack flow is measured each time it is adjusted, and the sample flow is correspondingly adjusted ensure near-isokinetic sampling.

Based on historical standby release data and the presence of two redundant filter systems, each containing four filters in a series (two bag filters, a prefilter, and a HEPA filter), the potential of exceeding the NESHAP (EPA 1989a) control value does not exist. Therefore, a radionuclide monitor is not required for the U-stack.

7.1.3 296-U-13 Stack

7.1.3.1 General Description. The 296-U-13 stack is a new, single-pass, air exhaust system constructed under Project B-255. This system exhausts filtered air from the UO_3 powder load-out hood. The filters consist of 80% efficient 24-in. by 24-in. by 11-1/2-in. prefilters, and of 24-in. by 24-in. by 11-1/2-in. HEPA filters (Figure 2-7). The HEPA filter unit is a Flanders 2 by 3, E-4, bagout assembly.

The 296-U-13 stack, located on the 224-UA roof, is 27 ft tall, has a 25-in. outside diameter, and is constructed of 16 gauge sheet metal. The exhauster is rated at 6,000 ft^3/min at 6 in. water vacuum. A beta/gamma

monitor, and a near-isokinetic record sampling system is provided. This system also has audiovisual alarms (in 224-U Operations Gallery) that indicate abnormal filter DP, abnormal flow conditions, and high radiation release.

7.1.3.2 **Instrumentation and Controls Specifications.** The exhaust system for the powder load-out hood is equipped with several types of monitors/alarms to warn personnel that a potential exposure or environmental hazard may exist. The types of instrumentation and monitoring equipment associated with the 296-U-13 stack and their function are listed below.

Parameter	Function
Stack Flow	The stack is controlled at a flow rate of approximately 6,000 ft^3/min. The flow controller has both a high and low-flow alarm. The low-flow alarm is set at 4,000 ft^3/min; the high-flow alarm is set at 7,500 ft^3/min.
No-Flow Alarm	This alarm is used to inform personnel that the X-44 exhaust fan is not in operation and requires activation before the hood can be used. It also serves as a warning device for operators, if the fan fails.
Prefilter Differential Pressure	The DP across the prefilter is monitored to inform personnel when the filters require replacement and/or cleaning. The DP instrument is equipped with a high-level alarm set at 4 in. water to warn personnel when this condition exists.
HEPA Filter Differential Pressure	The DP across the HEPA filters is monitored to inform personnel when the filters have become fully loaded and require replacement. The instrument is equipped with a high-level alarm set at a DP of 4 in. water.
Radioactive Releases	1. The U-13 stack is equipped with a beta continuous air monitor (CAM). The monitor is used to indicate the concentration of radioactive constituents being released to the environment on a real-time basis. The unit is equipped with a high-level alarm that indicates possible releases in excess of environments and a low-level alarm indicates possible instrument failure. Activation of either the high- or low-level alarm automatically shuts down the 296-U-13 stack. 2. A near-isokinetic record sampler samples the stack continuously. These samples are collected on a weekly basis. A preliminary count of its activity is performed to determine if the sample has the potential to exceed the release limits of

the stack. If the sample does exhibit this potential, the sample analysis is rushed to provide sample results within 24 h. The stack flow is measured each time it is adjusted, and the sample flow is adjusted correspondingly to ensure near-isokinetic sampling.

7.1.4 Air Effluent Monitoring Program

Existing equipment will be used to sample continuously and analyze periodically the gaseous effluent from the UO_3 stacks for filter differential pressures, total alpha and beta radiation, and specific radionuclides. Air effluent monitoring program will comply with the criteria provided in the Westinghouse *Environmental Compliance Manual*, WHC-CM-7-5 (WHC 1991a).

7.1.5 Air Effluent Sampling Program

Because only periodic monitoring to verify continued low radionuclide emissions will be required, the gaseous effluent in the UO_3 stacks will be sampled periodically for specific radionuclides using existing equipment and the criteria provided in applicable UO_3 operating procedures. At a minimum, air samples from the stacks will be analyzed for total Alpha radioactivity, total Beta radioactivity, Uranium, ^{90}Sr, ^{241}Am, Plutonium Isotopes, and ^{137}Cs. The sampling program for air effluents should be reported as discussed in Section 10.0.

7.2 LIQUID EFFLUENTS

The descriptions of the liquid effluent monitoring/sampling program and associated equipment used at the UO_3 Plant are compiled from information included in stream-specific reports (WHC 1990b), engineering drawing H-2-97874, (WHC 1991b), and the existing effluent monitoring plans (WHC 1989a).

7.2.1 Monitoring/Sampling Requirements

The concentrations of constituents in each UO_3 liquid wastestream must be below regulatory limits before the effluent can be discharged. The discharge criteria to be met in 1996, based on SALDS acceptance, are compared with the reported effluent quality from the two UO_3 wastestreams on Table 7-2. The effluent concentrations presented in the table represent the 90% confidence interval limit as reported in the stream-specific reports (WHC 1990b).

Table 7-2. Comparison of UO_3/U Plant Effluent Qualities and State Approved Land Disposal Structure Acceptance Criteria.[a, b] (4 sheets)

Analyte	Acceptance criterion	U/UPW[f]	PPC[f] (Calc mode)	PPC[f] (Standby mode)
Inorganic compounds - metals[c]				
Aluminum	50			
Antimony	5			
Arsenic	50			
Arsenic (EP toxic)	NC	<500		
Barium	1,000	30	8	
Barium (EP toxic)	NC	<1,000		
Beryllium	1			
Boron	NC	28.5		
Cadmium	5		2	
Cadmium (EP toxic)	NC	<100		
Calcium	NC	1.8 E+04		
Chromium	50		108	34.5
Chromium (EP toxic)	NC			
Copper	1,000	26.7		
Iron	300	33.3		69.6
Lead	5			
Lead (EP toxic)	NC	<500		
Magnesium	NC	4.5 E+03		
Manganese	50	7	9	
Mercury	2		3.7	
Mercury (EP toxic)	NC	<20		1.6 E-01
Nickel	100		55	24.9
Potassium	NC	745	1.2 E+07	5.5 E+05
Selenium	10			
Selenium (EP toxic)	NC	<500		
Silicon	NC	2.2 E+03		
Silver	50			
Silver (EP toxic)	NC	<500		
Sodium	NC	2.1 E+03	2.2 E+04	9.4 E+02
Strontium	NC	97.8		
Thallium	1	6.3		
Uranium	NC	2.4	419	65.5
Zinc	5,000	5.7	11	5.7

Table 7-2. Comparison of UO_3/U Plant Effluent Qualities and State Approved Land Disposal Structure Acceptance Criteria.[a, b]
(4 sheets)

Analyte	Acceptance criterion	U/UPW[f]	PPC[f] (Calc mode)	PPC[f] (Standby mode)
Inorganic Compounds - Ionic Species[c]				
Ammonium	NC	58.6		96
Chloride	2.5 E+05	9.7 E+02		8.4 E+02
Cyanide	200			213
Fluoride	2,000	137	2.5 E+04	1.0 E+03
Fluoride (IC)				
Fluoride (ISE)				
Nitrate	10,000	564	1.5 E+07	5.4 E+05
Nitrite	1,000			
Phosphate	NC			2.6 E+05
Sulfate	2.5 E+05	1.1 E+04	2.7 E+05	1.8 E+05
Organic Compounds[c]				
Acetone	NC		23	273
Benzoic acid	NC		14	
1-Butanol	NC		5	
2-Butanone	NC		12	27.8
2-Butyoxyethanol	NC		58	
Chloroform	6			
Butyl nitrate	NC		44	
Dichloromethane	5			
Trans-4- CCH	NC		78	
Methyl nitrate	NC		66	
Nitroethane	NC		43	
n-NDMA	2 E-03		4	
Phenanthrene	NC			66
Other Parameters[c]				
Alkalinity	NC	5.9 E+04		
Conductivity (µS)	NC	136		
Ignitability (°F)[d]	NC	199		
pH (dimensionless)	6.5-8.5	6.6	7.13	7.51
Reac cyanide (mg/kg)	NC	<100		
Reac sulfide (mg/kg)	NC	<100		
TDS	5.0 E+05	7.5 E+04		
Temperature	NC	14.6	26.2	30.1

Table 7-2. Comparison of UO_3/U Plant Effluent Qualities and State Approved Land Disposal Structure Acceptance Criteria.[a, b] (4 sheets)

Analyte	Acceptance criterion	U/UPW[f]	PPC[f] (Calc mode)	PPC[f] (Standby mode)
TOC	NC	1.1 E+03	6.4 E+03	1.18 E+03
Total Carbon	NC	1.6 E+04		
TOX (as Cl)	NC	13.8	21.8	83.1
Radionuclides[e]				
Total Alpha	15	3.6	447	0.9
Total Beta	20	2.5	7.1 E+03	816
Radium (226 + 228)	5.0 E+00			
Gross uranium-natural	2.4 E+01			
^{3}H	2.0 E+04			
^{14}C	NC			
^{60}Co	2.0 E+02	1.14		
^{90}Sr	8.0 E+00	1.14		
^{106}Ru	2.4 E+02			
^{113}Sn	2.0 E+03			
^{129}I	2.0 E+01			
^{137}Cs	1.2 E+02			
$^{144}Ce/Pr$	2.8 E+02			
^{147}Pm	8.0 E+04			
^{234}U	2.0 E+01	1.16		
^{235}U	2.4 E+01	1.3 E-01		
^{238}Pu	1.6 E+00			
^{238}U	2.4 E+01	8.7 E-01		
$^{239,240}Pu$	1.2 E+00	6.1 E-03		

Table 7-2. Comparison of UO_3/U Plant Effluent Qualities and State Approved Land Disposal Structure Acceptance Criteria.[a, b] (4 sheets)

Analyte	Acceptance criterion	U/UPW[f]	PPC[f] (Calc mode)	PPC[f] (Standby mode)
$^{239,240}U$	1.2 E+03			
^{241}Am	1.2 E+00			
^{241}Pu	8.0 E+01			

[a]Analyte concentrations represented by the 90% confidence interval limit (the upper limit of the one-tailed 90% confidence interval for all data sets) as reported in the appropriate stream-specific report. When a 90% confidence interval limit was not calculated, the maximum observed result is listed. Exception is PPC.
[b]Crane 1991.
[c]Effluent concentrations expressed as micrograms/L unless indicated otherwise.
[d]Ignitability temperatures are represented by the lower limit of the one-tailed confidence interval for all data sets.
[e]Effluent concentrations for radionuclides expressed as picocuries/L.
[f]Abbreviations used:
U/UPW - UO_3/U Plant wastewater
PPC - Plant process condensate
Calc - Calcination operations
Standby - Standby mode
NC - no criteria
Reac - reactive
TDS - total dissolved solids
TOC - total organic carbon
TOX - total organic halides
µS - microsiemen
IC - fluoride analysis using ion chromatography technique
ISE - fluoride analysis using ion-specific electron technique
CCH - chlorocyclohexanol
NDMA - nitrosoolimethylamine.

7.2.1.1 **Routine Conditions.** After review of the discharge criteria and available stream-specific data, the following are observed:

- Some effluent concentrations exceed the SALDS acceptance criteria (Crane 1991)
- The selection of analytes for characterization is not consistent
- The selection of analytes is not consistent with the discharge criteria parameters
- The wastestream characterizations must be refined before discharge to the SALDS commences.

These deficiencies in the database are largely a function of project scope. The stream-specific reports were prepared to evaluate whether the wastestreams were designated dangerous wastes pursuant to the Washington State *Dangerous Waste Regulations*, WAC 173-303 (WAC 1989a). Process knowledge and historic sampling data were used to select the analytical tests.

7.2.1.2 Monitoring/Diversion Interface. The UO_3/U Plant wastewater currently discharges into the 207-U Retention Basin and then into the 216-U-14 Ditch. The process condensate is routed to storage tanks at the UO_3 Plant. No monitoring or diversion interfaces are required.

7.2.1.3 Monitoring/Sampling Criteria. The effluent concentrations in the process condensate and wastewater streams during routine operations of the UO_3 Plant were below the most restrictive applicable federal and state standards for water quality. The effluent concentrations are also expected to meet the intent of the Washington State groundwater protection standards (WAC 1987) while the plant is in a standby mode. Monitoring and sampling activities will be performed to show compliance with applicable WAC/EPA regulations and appropriate discharge criteria.

Presently, no monitoring instrumentation exists to detect radionuclides in liquid effluent at the concentrations adopted as SALDS acceptance criteria (Crane 1991a). Furthermore, instrumentation that can attain these sensitivities is not commercially available nor is it likely that this type of instrumentation will be developed in the near future. As a result, instrument monitoring will be useful only for detecting and quantifying upset releases. Data for establishing environmental baseline conditions and determining compliance status will be collected by sampling and gathered from analyses.

The sampling strategy must also include provisions for correcting the deficiencies noted in Section 5.2.3.3. Uniformity and consistency must be incorporated in the sampling and analysis plan to ensure that the database contains the information necessary for making an informed judgement as to the acceptability of effluent for disposal at the SALDS. The sampling criteria are summarized below.

7.2.2 Process Condensate Effluent Monitoring/Sampling System

7.2.2.1 Process Condensate Monitoring/Sampling Description. Process condensate stream characterization (WHC 1990b) revealed the presence of part-per-billion (ppb) concentrations of organic species, including butanol, acetone, and 2-butanone. As a result of this evaluation, effluent discharge to the 216-U-17 Crib was discontinued in July 1989. Process condensate is currently routed to tanks for temporary storage before treatment.

As long as process condensate is routed to storage tanks within the UO_3 Plant, the wastestream does not meet the definition of effluent. Therefore, monitoring and sampling of the liquid is not required under the FEMP program.

7.2.3 Wastewater Effluent Monitoring/Sampling System

7.2.3.1 Wastewater Monitoring/Sampling Description. This stream is currently discharged into the 207-U Retention Basin and then into the 216-U-14 Ditch. Before discharge to the ditch, the stream is monitored continuously for pH and is flow-proportionally sampled. No capability exists for monitoring radioactive constituents. Three liquid effluent samples are taken each week.

9 1 1 2 3 6 5 2 0 5 6

One sample is analyzed for uranium, total alpha radioactivity, total beta radioactivity, and pH. The other two samples are composited for monthly analyses. The monthly analysis examines the sample for: total alpha, total beta, ^{239}Pu, ^{241}Am, uranium (gross), tritium, ^{99}Tc, and pH.

7.2.3.2 Wastewater Monitoring/Sampling Specifications. The pH of the stream is monitored continuously and alarms are sounded when the pH is less than 4 or greater than 10. When an out-of-compliance alarm sounds, a manual valve is closed to prevent discharge from 207-U into the 216-U-14 ditch. A detailed investigation of the wastewater stream is given in the stream-specific report for the effluent (WHC 1990b) and was summarized in Table 4-13. This report concluded that the stream did not contain any dangerous wastes, as defined by the Washington State *Dangerous Waste Regulations*, WAC 173-303-070 (WAC 1989a). The UO_3 FEMP determination document concluded that constituent concentrations in the wastewater stream meet existing drinking water and groundwater quality standards (WHC 1990c).

7.2.3.3 Wastewater Monitoring/Sampling Deficiencies. A review of the discharge criteria for a SALDS (Crane 1991) and available stream-specific data (WHC 1990b) reveals that some effluent concentrations exceed SALDS acceptance criteria. However, the stream-specific reports (WHC 1990b) contain 1989-1990 data and do not reflect the various source reduction, conservation, and other source volume and concentration minimization measures that have recently been implemented. Therefore, the wastestream characterizations must be refined before discharge to the SALDS commences. In addition, the current 222-S Analytical Laboratory detection limits for ^{241}Am and $^{239,240}Pu$ are 1.2×10^{-8} mCi/ml and 5.0×10^{-9} μCi/ml respectively (WHC 1990b); thus, the testing of samples to 4% of the DCG (1.2×10^{-9} μCi/ml) is not achievable for certain radionuclides.

8.0 HISTORICAL MONITORING/SAMPLING DATA FOR EFFLUENT STREAMS

8.1 AIR EFFLUENTS

8.1.1 Normal Conditions

Historical air effluent monitoring and sampling data have been assembled in annual reports. These reports record the routine releases, unusual occurrences (i.e., upset conditions), sample points, analytical data sheets, instrument calibration records, and other information. The last four annual reports are listed below. The 1987 report represents data collected while the UO_3 Plant was in standby mode. (Preliminary 1990 data were also used in the assessment.) The UO_3 Plant is currently in the standby mode.

Annual Reports

RHO, 1986a, *Radioactivity in Gaseous Waste Discharged from the Separations Facilities During 1986*, RHO-HS-SR-86-2 4QGASP, Rockwell Hanford Operations, Richland, Washington.

WHC, 1987, *Effluent Releases and Solid Waste Management Report for 1987: 200/600/1100 Areas*, WHC-EP-0141, Westinghouse Hanford Company, Richland, Washington.

WHC, 1989b, *Effluent Discharges and Solid Waste Management Report for 1988: 200/600 Areas*, WHC-EP-0141-1, Westinghouse Hanford Company, Richland, Washington.

WHC, 1990a, *Effluent Discharges and Solid Waste Management Report for 1989: 200/600 Areas*, WHC-EP-0141-2, Westinghouse Hanford Company, Richland, Washington.

Pertinent information on the historical gaseous effluent monitoring may also be found in *UO_3 Gaseous Effluent Monitoring Plan*, SD-CP-EMP-003, Rev. 1 (WHC 1989a).

8.1.2 Upset Conditions

Upset operating condition of each stack was developed in Section 4.1.3.

8.2 WATER EFFLUENTS

8.2.1 Normal Conditions

Historical liquid monitoring and sampling data have been assembled in various reports. The effluent releases and solid waste management reports for 1987, 1988, and 1989 cited in Section 8.1.1 list much of this information.

Routine operations and releases, upsets, sample points, analytical data sheets, and other information typically are recorded. The following reports contain additional historical data and standby condition data.

RHO, 1986b, *Radioactive Liquid Wastes Discharged to Ground in 200 Areas during 1986*, RHO-HS-SR-86-3 4QLIQP, Rockwell Hanford Operations, Richland, Washington.

WHC, 1989c, *UO_3 Liquid Effluent Monitoring Plan*, SD-CP-EMP-005, Rev. 1, Westinghouse Hanford Company, Richland, Washington.

8.2.2 Upset Conditions

Upset operating conditions for liquid discharge were given in Section 4.2.3.

9 1 1 2 3 6 5 2 0 5 9

9.0 SAMPLE ANALYSIS

9.1 ANALYTICAL LABORATORY AND PROCEDURES

Requirements for the development, issuance, and control of instructions and procedures within the Analytical Labs are covered by *Analytical Chemistry Services Laboratories Operating Instructions*, WHC-CM-5-4 (WHC 1988a). This procedure is an administrative procedure that provides guidance on how to write, review, and control analytical procedures and other supporting procedures used within the analytical laboratories.

The analytical laboratories presently have over 1,000 procedures that define operations. These procedures, individually numbered and controlled, are divided into six categories as shown below:

1. **LA Series - Analytical Procedures**--These procedures cover a specific analysis or analysis type for each sample.

2. **LO Series - Operating Procedures**--These procedures provide guidance for all laboratory operations supporting analytical techniques. This would include such operations as packaging and shipping.

3. **LE Series - Essential Materials Procedures**--These procedures cover the analysis of supplies, chemicals, metals, etc., using industry standard analyses such as American Society for Testing and Materials (ASTM) procedures.

4. **LR Series - Reagent Procedures**--These procedures provide guidance for the preparation, dilution, and storage of standards and reagents used in specific analytical procedures (LA Series).

5. **LC Series - Computer Operation Procedures**--These procedures cover the use of database systems and computer operations associated with specific analytical techniques.

6. **LQ Series**--These procedures cover the techniques used for quality control guidance, calibration and verification of analytical techniques and systems.

Each analytical procedure (LA Series) covers a specific analysis for a variety of sample types. The procedures are individually numbered, issued, and controlled by the Procedure Control Group. Each procedure is a controlled document and contains the following:

- Title
- Author
- Issued by
- Laboratory manager
- Release date

- Review date
- Document number
- Revision/modification
- Page number.

Each procedure contains the following generic sections as they apply to the specific analytical technique:

- Summary
- Limitations
- Application
- Safety
- Reagents
- Equipment
- Standards
- Procedure steps
- Calculations
- Discussion
- References.

Additional requirements are defined in *PUREX/UO3 Plant Administration*, WHC-CM-5-9 (WHC 1990d). These procedures define operations not covered by existing codes and standards and contain all necessary requirements for qualifying personnel, procedures, and/or equipment to conduct processes in a timely, competent manner. Analytical laboratory operating instructions also cover the preparation, documentation, and control of individual procedures.

Quality assurance requirements for the analytical laboratory procedures are defined by the following documents:

WHC, 1988b, *Quality Assurance Manual*, WHC-CM-4-2, Westinghouse Hanford Company, Richland, Washington, May 1988.

WHC, 1990d, *PUREX/UO_3 Plant Administration*, WHC-CM-5-9, Westinghouse Hanford Company, Richland, Washington, March 1990.

WHC, 1989d, *Analytical Chemistry Services Laboratories Quality Assurance Plan*, SD-CP-QAPP-001, G. B. Svancara and S. S. Moss, Westinghouse Hanford Company, Richland, Washington.

Details of analytical laboratory procedures and analytical procedures are discussed in the 222-S Laboratory FEMP (WHC 1991c).

9.2 SAMPLE AND DATA CHAIN OF CUSTODY

Sample identification is initiated by the operations group taking the sample. Sampling personnel use the appropriate form and log-in system to provide sample identification. Sample custody is transferred when the properly marked sample is received by the analytical laboratory.

Sample chain of custody within the analytical laboratory is covered by *Analytical Chemistry Services Laboratories Operating Instructions*, WHC-CM-5-4 (WHC 1988a) and individual analytical laboratory procedures.

9 1 1 2 3 6 5 2 0 6 1

9.2.1 U.S. Department of Energy Analytical and Laboratory Guidelines

The analytical and laboratory procedures for the FEMP activities are identified in the *Quality Assurance Project Plan for the Facility Effluent Monitoring Plan Activities* (QAPP) (WHC 1991d). General requirements for laboratory procedures, data analyses, and statistical treatment are addressed in the QAPP. Detailed descriptions of these requirements are given in each FEMP.

The following elements are identified in *Environmental Regulatory Guide for Radiological Effluent Monitoring and Environmental Surveillance* (DOE 1991).

Table 9-1. Laboratory Procedures. (2 sheets)

Element	Documentation
Sample identification system	To be provided when complete
Procedures preventing cross contamination	Contained in 222-S Laboratory Analytical Procedures (identified in QAPP QHC-EP-0446* Table 8-1)
Documentation of methods	Contained in 222-S Laboratory Analytical Procedures (identified in QAPP WHC-EP-0446 Table 8-1)
Gamma emitting radionuclides	See QAPP Table 8-1
Calibration	See QAPP Table 8-1
Handling of samples	See QAPP Table 8-1
Analysis method and capabilities	See QAPP Table 8-1
Gross alpha, beta and gamma measurements	See QAPP Table 8-1
Direct gamma-ray spectrometry	See QAPP Table 8-1
Beta counters	See QAPP Table 8-1
Alpha-energy analysis	See QAPP Table 8-1
Radiochemical separation Procedures	To be provided when available
Reporting of results	to be provided when available
Counter calibration	See Table B-1, QAPP
Intercalibration of equipment and procedures	To be provided when available
Counter background	Contained in 222-S Laboratory Analytical Procedures (QAPP Table 8-1)
Quality assurance	To be provided when available

Table 9-1. Laboratory Procedures. (2 sheets)

Summary of data and statistical treatment requirements	To be provided when available
Variability of effluent and environmental data	To be provided when available
Summarization of data and testing for outliers	To be provided when available
Treatment of significant figures	To be provided when available
Parent-decay product relationships	To be provided when available
Comparisons to regulatory or administrative control standards and control data	To be provided when available
Quality assurance	To be provided when available

*WHC 1991d.

9 1 1 2 3 6 5 2 0 6 3

10.0 NOTIFICATION AND REPORTING REQUIREMENTS

Notification and reporting requirements are imposed by federal and state law as well as by DOE orders. Because DOE and EPA documents are updated periodically, the current requirements should be obtained from the latest CFR, DOE order, etc. This section is a guideline for general notification and reporting requirements and a reference to the sources where specific information may be found for federal, state, and DOE requirements.

10.1 FEDERAL REQUIREMENTS

10.1.1 Resource Conservation and Recovery Act of 1976

The *Resource Conservation and Recovery Act of 1976* (RCRA) requires biennial reports to be submitted to the Regional Administrator of EPA. The Title 40 CFR 262, Subpart D (EPA 1988a) contains the reporting requirements for generators of hazardous waste who ship waste offsite or who store, treat, or dispose of hazardous waste onsite.

Owners or operators of treatment, storage, or disposal (TSD) facilities must comply with the reporting requirements contained in Title 40 CFR 264, Subpart E (EPA 1980b) and Title 40 CFR 265, Subpart E (EPA 1988b).

10.1.2 Comprehensive Environmental Response, Compensation, and Liability Act of 1980

The Title 40 CFR 302 (EPA 1989c) contains reportable quantities and notification requirements for releases of hazardous substances as designated by *Comprehensive Environmental Response, Compensation, and Liability Act of 1980* (CERCLA) and the *Clean Water Act of 1977*.

10.1.3 National Emission Standards for Hazardous Air Pollutants

Compliance and reporting requirements for DOE facilities emitting radionuclides other than radon are contained in Title 40 CFR 61, Subpart H. *National Emission Standards for Hazardous Air Pollutants* (NESHAP) (EPA 1989a) requires that an annual report be submitted to EPA headquarters and the appropriate national office.

10.2 STATE REQUIREMENTS

10.2.1 Generator Reporting

Generator reporting requirements are found in the Washington State *Dangerous Waste Regulations*, WAC 173-303-220 (WAC 1989a). Washington State requires that annual reports covering the preceding year be submitted by March 1 to the Washington State Department of Ecology (Ecology).

10.2.2 Facility Reporting

Owners or operators of TSD facilities are also required to prepare and submit annual reports. These also must be submitted by March 1 and cover facility activities for the previous year. The specific content requirements are in WAC 173-303-390 (WAC 1989a).

Effluents from the UO_3 Plant in the standby mode do not contain hazardous or dangerous wastes; therefore, UO_3 Plant operations are not subject to RCRA or the Washington State *Dangerous Waste Regulations*, WAC 173-303, (WAC 1989a) reporting requirements. DOE and Westinghouse Hanford would only have to comply with the above federal and state reporting requirements when the facility operations change and discharges (either liquid or gaseous) from the UO_3 Plant contain a hazardous or dangerous waste containment.

10.3 U.S. DEPARTMENT OF ENERGY REQUIREMENTS

10.3.1 U.S. Department of Energy Order 5400.1, Chapter II General Environmental Protection Program - Notification and Reports

Consistent with the notification requirements contained in DOE Orders 5484.1 (DOE 1983), 5000.3A (DOE 1990b), and the 5500 series, field organizations shall notify the Headquarters Emergency Operations Center (EOC) of the significant nonroutine releases of any pollutant or hazardous substance.

All DOE facilities that conduct significant environmental protection programs are required to prepare an Annual Site Environmental Report. Annual summary reports on environmental occurrences are to be included in the Annual Site Environmental Report. Suggested content and format for the Annual Site Environmental Report are contained in DOE Order 5400.1 (DOE 1988a).

The DOE Order 5400.1 (DOE 1988a) also requires that the Radioactive Effluent and Onsite Discharge Data Report covering the previous calendar year be submitted to the Waste Information Systems Branch, EG&G Idaho, Idaho Falls, Idaho 83415, by April 1. Unplanned releases of radioactive material in effluents, whether onsite or offsite, shall also be reported. The content and forms to be used for these reports are contained in DOE Order 5400.1, Chapter II.

10.3.2 U.S. Department of Energy Order 5484.1, Environmental Protection, Safety and Health Protection Information Reporting Requirements

Annual radiation exposure reports are required to be submitted to the System Safety Development Center by March 31 for the preceding calendar year. Content and form requirements are in DOE Order 5484.1, Chapter IV (DOE 1983).

The DOE Order 5484.1 also requires radiation exposures of individuals that exceed the specified limits in one calendar quarter to be reported in the form of a memorandum to the Operational and Environmental Safety Division. Radiation exposure limits are listed in Chapter II of DOE Order 5484.1.

Events that occur in the facility and which adversely affect operations, personnel safety, or DOE requirements should receive a thorough investigation and an investigation report should be prepared. The DOE Order 5484.1 sets forth occurrences requiring investigation, the investigation requirements as determined by the severity of the occurrence, and the investigation report format and content outlines.

The DOE Order 5484.1 requires contractors at the Hanford Site, at a minimum, make oral notification to the appropriate DOE Field Office, Richland, program division or office, to Public Affairs Office (PAO) and to Softwares Quality Assurance (SQA) or the SQA duty officer as soon as it is apparent that an incident may meet the criteria of a Type A or Type B occurrence. For a listing of occurrences requiring a Type A or Type B investigation, see Chapter I of DOE Order 5484.1.

Contractors are required to notify responsible SQA environmental protection officials verbally within 24 h of becoming aware of any of the following occurrences:

- Violation of applicable federal, state, or local pollution control standards and requirements
- Any noncompliance with the terms and/or conditions of an existing National Pollutant Discharge Elimination System (NPDES) permit, Prevention of Significant Deterioration (PSD) permit, or any other environmental protection-based permit or formal agreement with an applicable regulatory body
- Any gaseous or liquid radiological effluent releases that exceed DOE requirements and/or contractor-specific radiological release concentration guides.

Following verbal notifications, written reports must be submitted according to the procedures stated in DOE Order 5000.3A (DOE 1990b).

10.3.3 U.S. Department of Energy Order 5000.3A, Occurrence Reporting and Processing of Operations Information

The DOE Order 5000.3A (DOE 1990b) contains the notification and follow-up requirements for a variety of reportable occurrences. Categorization or

reportable occurrences should be made as soon as possible. Guidance to categorization and definitions can be found in Section 7 of DOE Order 5000.3A (DOE 1990b).

Emergency occurrences must be reported to DOE and offsite authorities within 15 min or less of categorization. Written notification must be made within 24 h.

Unusual occurrences must be reported to DOE within 2 h of categorization. Written notification shall be made within 24 h.

Off-normal occurrences must be reported via written notification within 24 h of categorization.

In addition, follow-up oral notification must also be made to DOE if any further degradation in the level of safety of the facility or other worsening conditions occur, when there is any change from one emergency action level to another, or upon termination of an emergency.

9 1 1 2 3 6 5 2 0 6 7

11.0 INTERFACE WITH THE OPERATIONAL ENVIRONMENTAL SURVEILLANCE PROGRAM

11.1 DESCRIPTION

The sitewide Environmental Monitoring Plan (EMP), as described in the Management Plan for Facility Effluent Monitoring Plan Activities, (WHC-EP-0491), (WHC 1991e), consists of two distinct but related components: environmental surveillance conducted by Pacific Northwest Laboratory (PNL) and effluent monitoring conducted by Westinghouse Hanford. The responsibilities for these two portions of the EMP are delineated in a Memorandum of Understanding (MOU) (PNL 1989). Environmental surveillance, conducted by PNL, consists of surveillance of all environmental parameters to demonstrate compliance with regulations. Effluent monitoring includes both in-line and facility effluent monitoring as well as near-field (near-facility) operational environmental monitoring. Projected EDEs, reported in this FEMP, are the products of in-line effluent monitoring. Near-field monitoring is required by Part O, "Environmental Monitoring," *Environmental Compliance Manual*, WHC-CM-7-5 (WHC 1991a), and procedures are described in *Operational Environmental Monitoring*, WHC-CM-7-4 (WHC 1988c).

11.2 PURPOSE

The purpose of near-field (operational environmental) monitoring is to determine the effectiveness of environmental controls in preventing unplanned spread of contamination from facilities and sites managed by Westinghouse Hanford under the approval of DOE. Effluent monitoring and reporting, monitoring of surplus and waste management units, and monitoring near-field environmental media are, therefore, conducted by Westinghouse Hanford for the following purposes: (1) controlling operations, (2) determining the effectiveness of facility effluent controls, (3) measuring the adequacy of containment at waste transportation and disposal units, (4) detecting and monitoring upset conditions, and (5) evaluating and upgrading effluent monitoring capabilities.

11.3 BASIS

Near-field environmental surveillance is conducted to monitor employee protection, monitor environmental protection, and ensure compliance with local, state, and federal regulations. Compliance with parts of DOE Orders 5400.1, *General Environmental Protection Program* (DOE 1988a); 5400.5, *Radiation Protection of the Public and the Environment* (DOE 1990a); 5484.1, *Protection, Safety, and Health Protection Information Reporting System* (DOE 1983); 5820.2A, *Radioactive Waste Management* (DOE 1988d); and DOE/EH-0173T, *Environmental Regulatory Guide for Radiological Effluent Monitoring and Environmental Surveillance* (DOE 1991), are addressed through this activity.

11.4 MEDIA SAMPLED AND ANALYSES PERFORMED

Procedure protocols for sampling, analysis, data handling, and reporting are specified in *Operational Environmental Monitoring*, WHC-CM-7-4 (WHC 1988c). Media include ambient air, surface water, groundwater, external radiation dose, soil, sediment, vegetation, and animals at or near active and inactive facilities and/or waste sites. Parameters monitored include the following, as needed: pH, water temperature, radionuclides, radiation exposure, and hazardous constituents. Animals that are not contaminated, as determined by a field instrument survey, are released at the capture location.

11.5 LOCATIONS

Samples are collected from known or suspected effluent pathways (e.g., downwind of potential releases, liquid streams, or proximal to release points). To avoid duplication, Westinghouse Hanford relies upon existing sample locations where PNL has previously established sample sites (e.g., air samplers in the 300 Area). There are 38 air samplers (4 in the 100 Area and 34 in the 200/600 Areas), 35 surface water sample sites (22 in the 100 Area and 13 in the 200/600 Areas), 110 groundwater monitoring wells (20 in the 100 Area, 89 in the 200/600 Areas, and 1 in the 300/400 Areas), 299 external radiation monitor points [182 survey points and 41 thermal luminescent dosimeter (TLD) sites in the 100 Area], 61 TLD sites in the 200/600 Areas, and 15 TLD sites in the 300/400 Areas), 157 soil sample sites (32 in the 100 Area, 110 in the 200/600 Areas, and 15 in the 300/400 Areas), and 95 vegetation sample sites (40 in the 100 Area, 40 in the 200/600 Areas, and 15 in the 300/400 Areas). Animal samples are collected at or near facilities and/or waste sites. Specific locations of sample sites are found in WHC-CM-7-4 (WHC 1988c).

Additionally, surveys to detect surface radiological contamination, scheduled in WHC-CM-7-4 (WHC 1988c), are conducted near and on liquid waste disposal sites (e.g., cribs, trenches, drains, retention basin perimeters, pond perimeters, and ditch banks), solid waste disposal sites (e.g., burial grounds and trenches), unplanned release sites, tank farm perimeters, stabilized waste disposal sites, roads, and firebreaks in the Operations Areas. There are 391 sites in the Operations Areas (100 in the 100 Area, 273 in the 200/600 Areas, and 18 in the 300/400 Areas) where radiological surveys are conducted.

11.6 PROGRAM REVIEW

The near-field (operational environmental) monitoring program will be reviewed at least annually for the following two reasons. The first is to determine that the appropriate effluents are being monitored. The second is to determine that the monitoring locations are in the best position to determine potential releases.

11.7 SAMPLER DESIGN

Sampler design (e.g., air monitors) will be reviewed at least biannually to determine equipment efficiency and compliance with current EPA and industry (e.g., ANSI and ASTM) standards.

11.8 COMMUNICATION

The Operations and Engineering Contractor and the Research and Development Contractor will compare and communicate results of their respective monitoring programs at least quarterly and as soon as possible under upset conditions.

11.9 REPORTS

Results of the near-field operational environmental monitoring program are published in the document series *Westinghouse Hanford Company Environmental Surveillance Annual Report 200/600 Area Calendar Year 1987*, WHC-EP-0145 (WHC 1988d). The radionuclide values in these reports are expressed in curies, or portions thereof, for each radionuclide per unit weight of sample (e.g., picocuries per gram) or in field instrument values (e.g., counts per minute) rather than EDE, which is calculated as the summation of the products of the dose equivalent received by specified tissues of the body and a tissue-specific weighting factor.

This page intentionally left blank.

9 1 1 2 1 1 2 1 7 1

12.0 QUALITY ASSURANCE

12.1 PURPOSE

The *Quality Assurance Project Plan for the Facility Effluent Monitoring Plan Activities*, WHC-EP-0446 (WHC 1991d) describes the quality assurance requirements associated with implementing FEMPs. The plan identified the FEMP activities and assigns the appropriate quality assurance requirements defined by the Westinghouse Hanford *Quality Assurance Manual*, WHC-CM-4-2 (WHC 1988b). This QAPP shall be consistent with the requirements in DOE Order 5700.6B, *Quality Assurance* (DOE 1986). In addition, quality assurance requirements in Title 40 CFR 60, Appendix A, *Reference Methodologies* (EPA 1990a) shall be considered when performing monitoring calculations and establishing monitoring systems.

12.2 OBJECTIVE

The objective of the plan is to provide a documented quality assurance plan describing quality assurance requirements for facilities implementing the FEMPs.

12.3 REQUIREMENTS

A QAPP (WHC 1991d) has been developed to implement the overall quality assurance program requirements defined by *Quality Assurance Manual*, WHC-CM-4-2 (WHC 1988b) and 40 CFR 61, Method 114, Appendix B (EPA 1989a). The QAPP applies specifically to the field activities, laboratory analyses, and continuous monitoring performed for all FEMPs conducted by Westinghouse Hanford. Plans and procedures referenced in the QAPP are available for regulatory review upon request by the direction of the Westinghouse Hanford Environmental Assurance Manager. Westinghouse Hanford supporting activities for FEMP activities are described in the QAPP in Table B-1.

12.4 FACILITY SPECIFIC REQUIREMENTS

The QAPP includes a list of analytes of interest and analytical methods for the *Resource Conservation and Recovery Act of 1976* (RCRA 1976) groundwater monitoring at the Hanford Site SALDS.

9 1 1 2 7 5 5 2 0 7 2

This page intentionally left blank.

9 1 1 2 1 5 2 1 7 3

13.0 INTERNAL AND EXTERNAL PLAN REVIEW

The *General Environmental Protection Program*, DOE Order 5400.1, Chapter IV.4 (DOE 1988a) requires the FEMP be reviewed annually and updated every 3 yr. The FEMP should be reviewed and updated as necessary after each major change or modification in the facility processes, facility structure, ventilation and liquid collection systems, monitoring equipment, waste treatment, or a significant change to the Safety Analysis Reports. In addition, EPA regulations require that records on the results of radioactive airborne emissions monitoring be maintained onsite for 5 yr. Operations management shall maintain records of reports on measurements of stack particulates or other nonradioactive hazardous pollutant emissions for 3 yr.

Facility operators will have to certify semiannually that no changes in operations have occurred that would require new testing. Although the report is based on the calendar year, the emission limits apply to any period of 12 consecutive months. Westinghouse Hanford Environmental Protection prepares an annual effluent discharge report for each area on the Hanford Site to cover both airborne and liquid release pathways. In addition, a report on the air emissions and compliance to the NESHAP (EPA 1989a) is prepared by Environmental Protection and submitted to EPA as well as DOE-HQ.

Facility management is to obtain the environmental protection function's approval for all changes to the FEMPs, including those generated in the annual review and update. In addition, the FEMP shall be reviewed by Quality Assurance.

9 1 1 2 3 6 5 2 0 7 4

This page intentionally left blank.

9 1 1 2 1 1 6 0 2 7 5

14.0 COMPLIANCE ASSESSMENT

A comparison of monitoring/sampling (M/S) system capabilities to regulatory and other requirements was completed to determine which areas are not in compliance. This section summarizes that comparison.

14.1 COMPLIANCE ASSESSMENT

14.1.1 Comparison of Instrument Specifications with Required Standards.

The existing air effluent M/S system of near isokinetic, continuous sampling with periodic analysis of the resultant samples fully complies with 40 CFR 61, Subpart H (EPA 1989a). Laboratory analysis, quality assurance, and chain-of-custody procedures are adequate to maintain sample accuracy and reliability.

Current water effluent, the plant wastewater, is sampled and analyzed periodically. This technique meets established standards for discharge to the 216-U-14 Ditch. Future discharge to an SALDS will be under a negotiated permit. Comparison to as-yet-to-be-defined discharge criteria, which are the result of the negotiation process, is not possible.

14.1.2 Comparison of Instrument Specifications with Monitoring Criteria

The current air monitoring systems with their capability of continuous, near isokinetic sampling followed by periodic analyses achieve full compliance with monitoring criteria. Water effluent monitoring criteria of flow, pH, and chemical composition are also fully met by the existing M/S system.

14.1.3 Comparison of Instrument Specifications with Effluent Characteristics

Existing monitoring equipment for both the air and water effluent streams has the capability to accurately characterize the stream's general parameters such as flow rate, loss of flow, temperature, pH, etc. These general parameters also are appropriate to indicate changes in the effluents. Laboratory analysis can be selected to characterize essentially any desired effluent parameter.

14.1.4 Comparison of Projected Effluent Characteristics with Historical Data

Historical data used to project effluent characteristics throughout this FEMP were edited so that only data representing standby conditions were used. Therefore, the projected characteristics are the same as the selected historical effluent data.

14.1.5 Comparison of Effluent Monitoring Capabilities with Regulatory and Contractor Requirements

Effluent monitoring capabilities for both the air and water discharges meet both regulatory and Westinghouse Hanford requirements.

14.2 EXEMPTIONS

No current or pending exemptions have been identified.

14.3 SYSTEM UPGRADES REQUIRED FOR COMPLIANCE

No system upgrades are currently required.

15.0 SUMMARY AND CONCLUSIONS

There currently are no gaseous or liquid effluents from the UO_3 Plant that require compliance monitoring or sampling. However, it is recommended that effluent streams be sampled, monitored, and reported at regular intervals to ensure continued compliance with all regulatory requirements.

Air samples from the stacks will be analyzed for total Alpha radioactivity, total Beta radioactivity, Uranium, ^{90}Sr, ^{241}Am, plutonium isotopes, and ^{137}Cs. The sampling program for air effluents will be reported annually as described in Section 10.1 of this document.

Liquid effluents will be monitored and sampled to show compliance with applicable regulations and appropriate discharge criteria as described in Section 7.2 of this document.

This page intentionally left blank.

16.0 ATTACHMENTS

16.1 REFERENCES

ANSI, 1969, *Guidance to Sampling Airborne Radioactive Material in Nuclear Facilities*, ANSI N13.1-1969, American National Standards Institute.

Beres, D. A., 1990, The *Clean Air Act Assessment Package - 1988 (CAP-88). A Dose and Risk Assessment Methodology for Radionuclide Emissions to Air*, Volumes 1-3, U.S. Environmental Protection Agency, Washington, D.C.

Clean Water Act of 1977, as amended, Public Law 95-217, 92 Stat. 1566, 33 USC 1251.

Comprehensive Environmental Response, Compensation and Liability Act of 1980, as amended, Public Law 96-510, 94 Stat. 2767, 42 USC 9601 et seq.

Crane, A. F., 1991, *Functional Design Criteria for the 242A/PUREX Plant Condensate Treatment Facility*, WHC-SD-C018H-FDC-001, Westinghouse Hanford Company, Richland, Washington, June 3, 1991.

DOE, 1983, *Environmental Protection, Safety and Health Protection Information Reporting Requirements*, DOE Order 5484.1, U.S. Department of Energy, Washington D.C., September 26, 1983.

DOE, 1986, *Quality Assurance*, DOE Order 5700.6B, U.S. Department of Energy, Washington D.C., September 23, 1986.

DOE, 1988a, *General Environmental Protection Program*, DOE Order 5400.1, U.S. Department of Energy, Washington D.C.

DOE, 1988b, *External Dose Conversion Factors for Calculation of Dose to the Public*, DOE/EH-0070, U.S. Department of Energy/Environmental Health, Washington, D.C., July 1988.

DOE, 1988c, *Internal Dose Conversion Factors for Calculation of Dose to the Public*, DOE/EH-0071, U.S. Department of Energy/Environmental Health, Washington, D.C., July 1988.

DOE, 1988d, *Radioactive Waste Management*, DOE Order 5820.2A, U.S. Department of Energy, Washington, D.C., September 26, 1988.

DOE, 1990a, *Radiation Protection of the Public and the Environment*, DOE Order 5400.5, U.S. Department of Energy, Washington D.C., February 8, 1990.

DOE, 1990b, *Occurrence Reporting and Processing of Operations Information*, DOE Order 5000.3A, U.S. Department of Energy, Washington D.C.

DOE, 1991, *Environmental Regulatory Guide for Radiological Effluent Monitoring and Environmental Surveillance*, DOE/EH-0173T, U.S. Department of Energy/ Environmental Health, Washington, D.C.

EPA, 1980a, *Prevention of Significant Deterioration Permit for Discharge of NO_x from PUREX/UO_3 Plants*, PSD-X80-14, U.S. Environmental Protection agency, Washington, D.C.

EPA, 1980b, *Standards for Owners and Operators of Hazardous Waste Treatment Storage, and Disposal Facilities*, Title 40, Code of Federal Regulations, Part 264, as amended, U.S. Environmental Protection Agency, Washington, D.C.

EPA, 1988a, *Standards Applicable to Generators of Hazardous Waste*, Title 40, Code of Federal Regulations, Part 262, U.S. Environmental Protection Agency, Washington, D.C.

EPA, 1988b, *Standards for Owners and Operators of Hazardous Waste Treatment, Storage, and Disposal Facilities*, Title 40, Code of Federal Regulations, Part 265, as amended, U.S. Environmental Protection Agency, Washington, D.C.

EPA, 1989a, *National Emission Standards for Hazardous Air Pollutants*, Title 40, Code of Federal Regulations Part 61, U.S. Environmental Protection Agency, Washington, D.C.

EPA, 1989b, *Identification and Listing of Hazardous Waste*, Title 40, Code of Federal Regulations, Part 261, U.S. Environmental Protection Agency, Washington, D.C.

EPA, 1989c, *Designation, Reportable Quantities and Notification*, Title 40, Code of Federal Regulations, Part 302, as amended, U.S. Environmental Protection Agency, Washington, D.C.

EPA, 1990a, *Quality Assurance Methods*, Title 40, Code of Federal Regulations, Part 60, U.S. Environmental Protection Agency, Washington, D.C.

Moore, R. E., C. F. Baes III, L. M. McDowell-Boyer, A. P. Watson, F. O. Hoffman, J. C. Pleasant, and C. W. Miller, June, 1979, *AIRDOS-EPA: A Computerized Methodology for Estimating Environmental Concentrations and Dose to Man from Airborne Releases of Radionuclides*, ORNL-5532, Oak Ridge National Laboratory, Oak Ridge, Tennessee.

PNL, 1989, *Memorandum of Understanding*, Pacific Northwest Laboratory and Westinghouse Hanford Company, Richland, Washington.

RCRA, 1976, *Resource Conservation and Recovery Act of 1976*, as amended, Public Law 94-580, 90 Stat. 2795, 42 USC 6901, et seq.

RCW, 1945, *Water Pollution Control Act of 1945*, as amended, Revised Code of Washington 90.48.

RHO, 1986a, *Radioactivity in Gaseous Waste Discharged from the Separations Facilities during 1986*, RHO-HS-SR-86-2 4QGASP, Rockwell Hanford Operations, Richland, Washington.

RHO, 1986b, *Radioactive Liquid Wastes Discharged to Ground in 200 Areas during 1986*, RHO-HS-SR-86-3 4QLIQP, Rockwell Hanford Operations, Richland, Washington.

Safe Drinking Water Act of 1974, as amended, Public Law 93-523, 42 USC 300f, et seq.

Slade, D. H., ed., July, 1968, *Meteorology and Atomic Energy*, U.S. Atomic Energy Commission/Division of Reactor Development and Technology.

WAC, 1987, *Water Quality Standards for Ground Waters of the State of Washington*, WAC-173-200, Washington Administrative Code, Olympia, Washington.

WAC, 1989a, *Dangerous Waste Regulations*, Washington Administrative Code 173-303, Washington State Department of Ecology, Olympia, Washington.

WAC, 1989b, *Washington State Ambient Air Quality Standard and Emission Limits for Radionuclides*, Washington Administrative Code 173-480, Washington State Department of Ecology, Olympia, Washington.

WHC, 1982, *Generic Stack Sampler/Monitor Flow Diagram*, H-2-92486, Westinghouse Hanford Company, Richland, Washington.

WHC, 1987, *Effluent Releases and Solid Waste Management Report for 1987:* 200/600/1100 Areas, WHC-EP-0141, Westinghouse Hanford Company, Richland, Washington.

WHC, 1988a, *Analytical Chemistry Services Laboratories Operating Instructions*, WHC-CM-5-4, Westinghouse Hanford Company, Richland, Washington, May 1988.

WHC, 1988b, *Quality Assurance Manual*, WHC-CM-4-2, Westinghouse Hanford Company, Richland, Washington, May 1988.

WHC, 1988c, *Operational Environmental Monitoring*, WHC-CM-7-4, Westinghouse Hanford Company, Richland, Washington, September 1988.

WHC, 1988d, *Westinghouse Hanford Company Environmental Surveillance Annual Report 200/600 Areas Calendar Year 1987*, WHC-EP-0145, R. E. Elder, G. W. Egert, A. R. Johnson, Westinghouse Hanford Company, Richland, Washington, April 1988.

WHC, 1989a, *Effluent Monitoring Plan for UO_3 Plant Gaseous Effluents*, SD-CP-EMP-003, Rev. 1, Westinghouse Hanford Company, Richland, Washington.

WHC, 1989b, *Westinghouse Hanford Company Effluent Discharges and Solid Waste Management Report for Calendar Year 1988: 200 Areas/600 Areas*, WHC-EP-0141-1, Westinghouse Hanford Company, Richland, Washington.

WHC, 1989c, *UO_3 Liquid Effluent Monitoring Plan*, SD-CP-EMP-005, Rev. 1, Westinghouse Hanford Company, Richland, Washington.

WHC, 1989d, *Analytical Chemistry Services Laboratories Quality Assurance Plan*, SD-CP-QAPP-001, G. B. Svancara and S. S. Moss, Westinghouse Hanford Company, Richland, Washington.

WHC, 1990a, *Westinghouse Hanford Company Effluent Discharges and Solid Waste Management Report for Calendar Year 1989: 200 Areas/600 Areas*, WHC-EP-0141-2, Westinghouse Hanford Company, Richland, Washington.

WHC, 1990b, *Stream Specific Reports*, WHC-EP-0342, Addenda 7 and 19, Westinghouse Hanford Company, Richland, Washington.

WHC, 1990c, *Facility Effluent Monitoring Plan Determinations for the 200 Area Facilities*, WHC-EP-0440, Westinghouse Hanford Company, Richland, Washington.

WHC, 1990d, *PUREX/UO_3 Plant Administration*, WHC-CM-5-9, Westinghouse Hanford Company, Richland, Washington, March, 1990.

WHC, 1991a, *Environmental Compliance Manual*, WHC-CM-7-5, Rev. 2, Westinghouse Hanford Company, Richland, Washington.

WHC, 1991b, *IEFD Liquid Effluent System*, H-2-97874, Westinghouse Hanford Company, Richland, Washington.

WHC, 1991c, *Facility Effluent Monitoring Plan for the 222-S Laboratory*, WHC-EP-0480, Westinghouse Hanford Company, Richland, Washington, November 1991.

WHC, 1991d, *Quality Assurance Project Plan for the Facility Effluent Monitoring Plan Activities*, WHC-EP-0446, Westinghouse Hanford Company, Richland, Washington.

WHC, 1991e, *Management Plan for Facility Effluent Monitoring Plan Activities*, WHC-EP-0491, Westinghouse Hanford Company, Richland, Washington.

9 1 1 2 3 6 5 2 0 8 3

16.2 STATE APPROVED LAND DISPOSAL STRUCTURE ACCEPTANCE CRITERIA

The SALDS acceptance criteria for the 200 Area treated effluent disposal are given in Table 16-1.

Table 16-1. Acceptance Criteria for 200 Area Treated Effluent Disposal Facility[a]. (7 sheets)

	Safe drinking water act of 1974[b]					Water pollution control act[c]	Most restrictive limit	Basis
	Drinking water standards					Groundwater quality standards		
	Current			Proposed				
	MCL mg/L	MCLG mg/L	SMCL mg/L	MCL mg/L	SMCL mg/L	mg/L	mg/L	
INORGANICS: METALS								
Aluminum					0.06		0.050	S,W
Antimony				0.01/0.005			0.005	W
Arsenic (III)	0.05			0.03		0.00005	0.00005	W
Aresenic (V)	0.05			0.03		0.00005	0.00005	S
Asbestos				7,000 F/mL			7,000 F/mL	S
Barium	1.00			5.0		1.000	1.000	S,W
Boron								
Beryllium				0.001			0.001	S,W
Cadmium	0.01			0.005		0.010	0.005	S
Calcium								
Chromium (VI)	0.05			0.1		0.050	0.050	S,W
Chromium (III)	0.05			0.1		0.050	0.050	S,W
Copper			1.0		1.0	1.000	1.000	S,W
Iron			0.3		0.3	0.300	0.300	S,W
Lead	0.05			0.011/0.005		0.050	0.005	S
Magnesium								
Manganese			0.05		0.05	0.050	0.050	S,W
Mercury	0.002			0.002		0.002	0.002	S,W
Nickel				0.1			0.100	S,W
Phosphorous								
Potassium								
Selenium	0.01			0.05		0.010	0.010	S,W
Silicon								
Silver	0.05				0.09	0.050	0.050	S,W
Sodium								
Thallium				0.002/0.001			0.001	S
Uranium								
Vanadium								
Zinc			5.0		5.0	5.000	5.000	S,W
INORGANICS: IONS								
Ammonium								
Carbonate								
Chloride			250.0		250.0	250.00	250.00	S,W
Cyanide				0.200			0.200	S
Fluoride	4,000	4,000	2,000	4,000	2,000	4,000	2,000	S
Nitrate (as Nitrogen)	10.00			10.0		10.000	10.000	S,W

Table 16-1. Acceptance Criteria for 200 Area Treated Effluent Disposal Facility[a]. (7 sheets)

	Safe drinking water act of 1974[b]					Water pollution control act[c]	Most restrictive limit	Basis
	Drinking water standards					Groundwater quality standards		
	Current			Proposed				
	MCL mg/L	MCLG mg/L	SMCL mg/L	MCL mg/L	SMCL mg/L	mg/L	mg/L	
Nitrite (as Nitrogen)				1.000			1.000	S
Sulfate			250.0	400/600	250.0	250.000	250.000	S,W
Sulfide								
MISCELLANEOUS								
Ammonia						20.00**	20.0	W
Corrosivity			Noncorr		Noncorr	Noncorr	Noncorr	S,W
Color			15 CU		15 CU	15 CU	15 CU	S,W
Foaming Agents			0.5		0.5	500.0	0.5	S,W
Ores			3 T		3 T	3 T	3 T	S,W
pH			6.5-8.5		6.5-8.5	6.5-8.5	6.5-8.5	S,W
Total Dissolved Solids			500.0		600.0	500.0	500.0	S,W
Direct Black 38						0.000009	0.000009	W
Direct Blue 6						0.000009	0.000009	W
Direct Brown 95						0.000009	0.000009	W
RADIONUCLIDES								
^{241}Am								
^{137}Cs								
^{155}Eu								
Gross Alpha	15 pCi/L					15 pCi/L	15 pCi/L	S,W
Gross Beta	4 mrem/yr					20 pCi/L	20 pCi/L	W
^{129}I								
^{238}Pu								
^{239}Pu								
^{240}Pu								
^{241}Pu								
^{147}Pm								
$^{226,228}Ra$	5 pCi/L					5 pCi/L	5 pCi/L	S,W
^{225}Ra	3 pCi/L					3 pCi/L	3 pCi/L	S,W
^{103}Ru								
^{106}Ru								
^{80}Sr						8 pCi/L	8 pCi/L	W
^{103}Tn								
Tritium						20,000 pCi/L	20,000 pCi/L	W
ORGANICS: PAHs								
Polynuclear Aromatics						0.00001	0.00001	W
Hydrocarbons (PAHs)								

Table 16-1. Acceptance Criteria for 200 Area Treated Effluent Disposal Facility[a]. (7 sheets)

	Safe drinking water act of 1974[b]					Water pollution control act[c]	Most restrictive limit	Basis
	Drinking water standards					Groundwater quality standards		
	Current			Proposed				
	MCL mg/L	MCLG mg/L	SMCL mg/L	MCL mg/L	SMCL mg/L	mg/L	mg/L	
Benzo(a)pyrene				0.0002		0.000008	0.000008	W
Benzo(a)anthracene				0.0001			0.0001	S
Benzo(b)fluoran-thene				0.0002			0.0002	S
Benzo(k)fluoran-thene				0.0002			0.0002	S
Chrysane				0.0002			0.0002	S
Dibenz(a,b)-anthracene				0.0003			0.0003	S
Indenopyrene				0.0004			0.004	S
ORGANICS: BENZENES								
Azobenzene						0.0007	0.0007	W
Benzene	0.005	0.000		0.005		0.001	0.001	W
1,4-Dichlorobenzene						0.004	0.004	W
para-Dichlorobenzene	0.075	0.075		0.076	0.005		0.005	S
ortho-Dichlorobenzene				0.6	0.01		0.01	S
Ethylbenzene				0.7	0.03		0.03	S
Hexachloroenzene				0.001		0.00005	0.00005	W
Monochlorobenzene				0.1			0.1	S
1,2,4-Trichlorobenzene				0.009			0.009	S
o-Chloronitrobenzene						0.003	0.003	W
p-Chloronitrobenzene						0.005	0.005	W
ORGANICS: OTHER AROMATICS								
Benzotrichloride						0.000007	0.000007	W
Styrene				0.005/0.1	0.01		0.005	S
Toluene				2.0	0.04		0.04	S
2,6-Dinitrotoluene						0.0001	0.0001	W
2,6-Dinitrotoluene						0.0001	0.0001	W
p,a,a,a-Tetrachlorotoluene						0.000004	0.000004	W
Xylene (total)				10.0	0.02		0.02	S
ORGANICS: PHENOLICS								
Pentachloropnenol				0.2	0.03		0.03	S
2,4,5-Trichlorophenol						0.004	0.004	W
ORGANICS: PHTHALATES								
Ble(2-ethylhexyl) phthalate				0.004		0.006	0.004	S
Butylbenzylphthalate				0.1			0.1	S
ORGANICS: ADIPATES								
Di(ethylhexyl)adipate				0.5			0.5	S

Table 16-1. Acceptance Criteria for 200 Area Treated Effluent Disposal Facility[a]. (7 sheets)

	Safe drinking water act of 1974[b]					Water pollution control act[c]	Most restrictive limit	Basis
	Drinking water standards					Groundwater quality standards		
	Current			Proposed				
	MCL mg/L	MCLG mg/L	SMCL mg/L	MCL mg/L	SMCL mg/L	mg/L	mg/L	
ORGANICS: ALKANES								
1,1-Dichloroethane						0.001	0.001	W
1,2-Dichloroethane	0.005	0.0		0.005		0.0005	0.0005	W
1,1,1-Trichloroethane	0.2	0.2		0.2		0.200	0.2	S,W
1,1,2-Trichloroethane				0.006			0.006	S
Bromodichloromethane						0.003	0.003	W
Bromoform						0.005	0.005	W
Carbon tetrachloride	0.005	0.0		0.005		0.0003	0.0003	W
Chlorodibromomethane						0.00055	0.0005	W
1,2 Dibromoethane						0.000001	0.000001	W
Methylene chloride (Dichloromethane)						0.006	0.006	W
Trichloromethane (Chloroform)	0.1					0.007	0.007	W
Total Trihalomethanes	0.1						0.1	S
Dibromo-chloropropane				0.0002			0.0002	S
1,2-Dichloropropane				0.006		0.0006	0.0006	W
ORGANICS: ALKENES								
1,1-Dichloroethylene	0.007	0.007		0.007			0.007	S
cis-1,2-Dichloroethylene				0.07			0.07	S
trans-1,2-Dichloroethylene				0.1			0.1	S
Tetrachloroethylene				0.005		0.0008	0.0008	W
Trichloroethylene	0.005	0.0		0.005		0.003	0.003	S
Ethylene dibromide				0.00006		0.000001	0.000001	W
1,3-Dichloropropene						0.0002	0.0002	W
Hexachlorocy-clopentadiene				0.05	0.005		0.005	S
Vinylchloride (Ethylene chloride)	0.002	0.0		0.002		0.00002	0.00002	S
ORGANICS: NITRILES								
Acrylonitrile						0.00007	0.00007	W
ORGANICS: AZINES/AZIDES								
1,2-Dimethylhydrazine						0.060	0.06	W
1,2-Diphenylhydrazine						0.00008	0.00008	W
Hydrazine/Hydrazine sulfate						0.00003	0.00003	W
ORGANICS: AMINES								
Aniline						0.014	0.014	W
4-Chloro-2-methylaniline						0.0001	0.0001	W

Table 16-1. Acceptance Criteria for 200 Area Treated Effluent Disposal Facility[a]. (7 sheets)

	Safe drinking water act of 1974[b]					Water pollution control act[c]	Most restrictive limit	Basis
	Drinking water standards					Groundwater quality standards		
	Current			Proposed				
	MCL mg/L	MCLG mg/L	SMCL mg/L	MCL mg/L	SMCL mg/L	mg/L	mg/L	
4-Chloro-2-methy-laniline hydrochloride						0.0002	0.0002	W
2-Methoxy-6-nitroaniline						0.002	0.002	W
2-Methylaniline						0.0002	0.0002	W
2-Methylaniline hydrochloride						0.0005	0.0005	W
4,4'-Methylene bis(N,N'-dimethyl)aniline						0.002	0.002	W
3,3'-Dichiorobenzidine						0.0002	0.0002	W
3,3'-Dimethoxybenzidine						0.006	0.006	W
3,3'-Dimethylbenzidine						0.000007	0.000007	W
Dimethyinitroamine						0.0000007**	0.0000007	W
N-Nitroso-di-n butylamine						0.00002	0.000002	H
N-Nitrosodiethanolamine						0.00003	0.00001	H
N-Nitrosodiethylamine						0.00000006	0.0000006	W
N-Nitrosodimethylaimine						0.000002	0.000002	W
N-Nitroso-n-methylethylamine						0.000004	0.000004	W
N-Nitrosodiphenylamine						0.017	0.017	W
N-Nitroso-di-n-propylamine						0.00001	0.00001	W
N-Nitrosopyrroidine						0.00004	0.00004	W
o-Phenylenediamine						0.000005	0.000005	W
2,4-Toluenediamine						0.000002	0.000002	W
o-Toluidine						0.0002	0.0002	W
ORGANICS: ETHERS								
Bis(chloroethyl)ether						0.00007	0.00007	W
Bis(chloromethyl)ether						0.0000004	0.0000004	W
1,4-Dioxane						0.007	0.007	W
ORGANICS: BIPHENYLS								
Polychlorinated biphenyls (PCBs)				0.0005		0.00001	0.00001	W
Polybrominated biphenyls (PBBs)						0.00001	0.00001	W
ORGANICS: DIOXINS/FURANS								
2,3,7,8-TCDD (Dioxin)				0.00000006		0.0000000006	0.0000000006	W
Hexachlorodibenzo-p-dioxin						0.00000001	0.00000001	W
ORGANICS: MISCELLANEOUS								
Acrylamide						0.00002	0.00002	W

Table 16-1. Acceptance Criteria for 200 Area Treated Effluent Disposal Facility[a]. (7 sheets)

	Safe drinking water act of 1974[b]					Water pollution control act[c]	Most restrictive limit	Basis
	Drinking water standards					Groundwater quality standards		
	Current			Proposed				
	MCL mg/L	MCLG mg/L	SMCL mg/L	MCL mg/L	SMCL mg/L	mg/L	mg/L	
Benzylchloride						0.0005	0.0005	W
Carbazols						0.006	0.006	W
Chlorthalonil						0.030	0.030	W
Epichlorohydrine						0.006	0.006	W
Ethoxytriethyleneglycol								
Ethyl acrylate						0.002	0.002	W
Ethylene thiourea						0.002	0.002	W
Furlum						0.000002	0.000002	W
Furmecyclox						0.003	0.003	W
Mirex						0.00005	0.00005	W
Nitrofurazone						0.00006	0.00006	W
Propylene oxide						0.00001	0.00001	W
Trimethyl phosphate						0.002	0.002	W
ORGANICS: PESTICIDES								
Alachlor				0.002			0.002	S
Aldicarb				0.01			0.010	S
Aldicarb sulfoxide				0.01			0.010	S
Aldicarb sulfone				0.04			0.040	S
Aldrin/Dieldrin						0.000006	0.000006	W
Aramite						0.003	0.003	W
Atrazine				0.003			0.003	S
Carbofuran				0.04			0.040	S
Chlordane				0.002		0.00006	0.00006	W
2,4-D	0.1			0.07		0.100	0.070	S
Daiapon				0.2			0.200	S
DDT						0.0003	0.0003	W
Diallate						0.001	0.001	W
Dichlorvos						0.0003	0.0003	W
Dieldrin						0.000005	0.000005	W
Dinoseb				0.007			0.0070	S
Dique\as				0.02			0.020	S
Endothall				0.1			0.100	S
Endrin	0.0002			0.002		0.0002	0.0002	W,S
Furazolidone						0.00002	0.00002	W
Folpet						0.020	0.020	W
Glyphosphate				0.7			0.700	S
Heptachlor (and hydroxide)				0.0004		0.00002	0.00002	W
Heptachlor epoxide				0.0002		0.000009	0.000009	W

Table 16-1. Acceptance Criteria for 200 Area Treated Effluent Disposal Facility[a]. (7 sheets)

	Safe drinking water act of 1974[b]					Water pollution control act[c]	Most restrictive limit	Basis
	Drinking water standards					Groundwater quality standards		
	Current			Proposed				
	MCL mg/L	MCLG mg/L	SMCL mg/L	MCL mg/L	SMCL mg/L	mg/L	mg/L	
Hexachlorocyclohexane (alpha)						0.000001	0.000001	W
Hexachlorocyclohexane (technical)						0.00005	0.00005	W
Lindane	0.004			0.0002		0.00006	0.00006	W
Methoxychlor	0.1			0.4		0.100	0.100	W,S
Oxamyl(vydate)				0.2			0.200	S
Pholoram				0.6			0.600	S
Simazine				0.001			0.001	S
Toxaphene	0.006			0.005		0.00006	0.00006	W
2,4,5-TP (Silvex)	0.01			0.05		0.010	0.0100	W,S

[a]This table is compiled from regulatory levels published in the Federal Safe Drinking Water Act of 1974 and the Washington State Water Pollution Control Act (RCW 1945). The 200 Area waste streams intended for disposal in the TEDF are expected to contain some constituents that are not identified on this table. The Water Quality Standards for the State of Washington (WAC 173-200) (WAC 1987) state. "Where a criterion is not established for a contaminant, the enforcement limits in ground water shall equal the practical quantification level except: (a) where there is evidence that a lower concentration would better protect human health and the environment (based on published health advisories, risk assessments and other available information), the department shall establish a more stringent enforcement limit (b) if clear and convincing evidence can be provided to the department's satisfaction that an alternative concentration will provide protection to human health and the environment, the department may establish an enforcement limit higher than the practical quantification level."

[b]Safe Drinking Water Act of 1974, as amended, Public Law 93-523, 42 USC 300f, et seq.

[c]Water Pollution Control Act of 1945, as amended, revised Code of Washington 90.48.

ABBREVIATIONS:

SDWA = Federal Safe Drinking Water Act
MCL = Maximum contaminant Level
MCLG = Maximum Contaminant Level Goal
SMCL = Secondary Maximum Contaminant Level
WPCA = Washington State Water Pollution Control Act
mg/kg = milligrams per kilogram
F/mL = Fibers per milliliter
pCi/L = picocuries per liter
TON = Threshold Odor Number

•Based on human health criteria for carcinogens. Value presented is based on 1E-06 risk level.

••Calculated, using MTCA and WPCA formulas, and available reference dose and/or cancer potency factor data.

*Criteria are hardness dependent. Assumed harness equal to 30 mg/L as $CaCO_3$.

**Criteria are pH dependent. Assumed pH equal to 7.0.

***Criteria are pH and temperature dependent. Assumes pH equal to 7.0 and temperature equal to 20 °C.

Column marked BASIS indicates source of MOST RESTRICTIVE LIMIT:
S = SOWA; W = WPCA; H = Health Based Limits;
L = Land Disposal Restrictions; P = PQL

DISTRIBUTION

Number of Copies		
OFFSITE		
3	Westinghouse Idaho Nuclear Company PO Box 4000 Idaho Falls, Idaho 83403	
	K. Kouri	32-02
ONSITE		
7	U.S. Department of Energy Field Office, Richland	
	G. M. Bell	A5-52
	R. F. Brich	A5-55
	S. S. Clark	A6-55
	E. B. Dagan	A5-19
	L. A. Huffman	A6-55
	S. D. Stites	A5-19
	Public Reading Room	A1-65
1	Hanford Environmental Health Foundation	
	L. J. Maas	B2-75
1	Kaiser Engineers Hanford	
	P. G. Bodily	E2-10
7	Pacific Northwest Laboratory	
	W. J. Bjorklund	P7-68
	T. D. Chikalla	P7-75
	R. E. Jaquish	K1-30
	D. L. Klages	P7-68
	A. K. Stalker	P7-60
	R. K. Woodruff	K6-13
	Technical Files	K1-11

DISTRIBUTION (continued)

Number of Copies

ONSITE

49 Westinghouse Hanford Company

S. E. Albin	T1-06
S. M. Anthony	N3-05
J. A. Bates	B2-19
R. J. Bliss	B3-04
R. E. Bolls	N3-13
J. R. Brehm	R2-77
S. L. Brey	T6-12
J. D. Briggs	T6-14
M. J. Brown	T1-30
G. D. Carpenter	B2-16
G. J. Carter	T1-06
L. P. Diediker (2)	T1-30
J. J. Dorian	B2-16
J. A. Eacker	R1-51
R. G. Egge	R2-77
B. G. Erlandson	B2-19
D. G. Farwick	H4-16
K. A. Gano	X0-21
L. A. Garner	T5-54
E. M. Greager	L6-60
K. A. Hadley	N1-35
N. S. Hale	B4-53
M. J. Hall	B2-19
J. W. Handy	B2-19
D. R. Herman	S4-01
K. R. Jordan	B3-51
E. J. Kosiancic	S0-61
R. J. Landon	B2-19
R. E. Lerch	B2-35
G. J. Miskho	R2-50
J. M. Nickels (2)	T1-30
K. A. Peterson	S6-70
D. R. Pratt	T1-30
R. J. Thompson	S6-01
R. R. Thompson	L4-88
L. W. Vance	H4-16
G. E. Vansickle	R2-81
D. J. Watson	X0-41
B. F. Weaver	T3-11
C. D. Wollam	S6-19
Document Processing and Distribution (2)	L8-15
Central Files	L8-04
Information Release Administration (3)	R1-08