014209
2 of 2

Volume 2

SECTION 4.0

ARCHITECTURAL DESIGN BASIS

TABLE OF CONTENTS

			PAGE
4.0	ARCHITECTURAL DESIGN BASIS		1
	4.1	General	1
	4.2	Design Criteria Documents	2
	4.3	Architectural Design Requirements	6
		4.3.1 Building Exits	6
		4.3.2 Design Basis for Personnel and Services	6
		4.3.3 System Design Requirements	7
	4.4	General Design Requirements	7
		4.4.1 Roofs	7
		4.4.2 Pedestrian Doors	8
		4.4.3 Door Hardware and Weatherstripping	8
		4.4.4 Door Control Systems	8
		4.4.5 Interior Finishes	9
		4.4.6 Plumbing Systems and Fixtures	9
		4.4.7 Signage	9
	4.5	Vitrification Building Design Requirements	10
		4.5.1 Exterior Walls	10
		4.5.2 Interior Partitions	10
		4.5.3 Ceilings	10
		4.5.4 Roofing: Concrete Areas	10
		4.5.5 Roofing: Structural Steel Framed Areas	10
		4.5.6 Exterior Pedestrian Door Openings	10
		4.5.7 Industrial Service Doors	11
		4.5.8 Coatings for Chemical and Decontamination Service	11
		4.5.9 Plumbing Fixtures	11
		4.5.10 Specialties	11
	4.6	Operations Control/Regulated Entrance Building	11
		4.6.1 General	11
		4.6.2 Exterior Walls	12
		4.6.3 Interior Partitions	12
		4.6.4 Ceilings	12
		4.6.5 Roofing	13
		4.6.6 Aluminum Entrance and Windows	13
		4.6.7 Plumbing Facilities	13
		4.6.8 Toilet Room Accessories	13
		4.6.9 Specialties	13
	4.7	Drawing and Specification Procedures	14
		4.7.1 Drawing Procedures	14
		4.7.2 Specification Procedures	14

BEST AVAILABLE COPY

THIS PAGE INTENTIONALLY
LEFT BLANK

4.0 ARCHITECTURAL DESIGN BASIS

4.1 General

This document provides the basis for architectural design for the Hanford Waste Vitrification Plant (HWVP) to be located about 2000 ft. west of the existing B Plant in the 200 East Area of the Hanford Reservation near Richland, Washington. The design life of the HWVP will be 40 years. Materials of construction will be noncombustible and will be provided with protective coatings resistant to corrosion. The overall design will consider safety, economy, operability, maintenance, decontamination, and decommissioning.

The facility consists of the following buildings/structures:

4.1.1 The Vitrification Building is a four-story reinforced concrete structure approximately 370 feet by 150 feet with a portion of the building located below-grade. The main process cells are located on the first floor with support systems housed at various levels throughout, except for the HVAC system which is located primarily on the fourth floor and covered with insulated metal siding.

4.1.2 The Manipulator Repair Building is a multi-story steel framed metal building. Located at the south end of the Vitrification Building, master slave manipulators are brought here for repair and maintenance. This building also provides a central changing facility for personnel donning special work permit clothing.

4.1.3 The Frit Storage/Cold Chemical Building is a one-story metal building located adjacent to the southeast quadrant of the Vitrification Building. Cold chemicals and frit are received and stored in this building and fed into the process cells of the Vitrification Building.

4.1.4 The Canister Storage Building is a two-story building located southeast of the Vitrification Building. Above-grade operating and office areas are enclosed in metal construction. Below-grade areas and above-grade HVAC areas are enclosed in reinforced concrete construction.

4.1.5 The Operations Control/Regulated Entrance Building is a one-story steel framed metal building located along the west side of the Vitrification Building. This building provides space for clean and regulated change rooms, personnel monitoring, decontamination, and Vitrification Building access control functions. It also houses operations personnel and the plant's central control room and computers.

4.1.6 The Sand Filter is a one-story below-grade reinforced concrete building located approximately 100 feet southwest of the

Vitrification Building. This building is connected to the Vitrification Building by means of a below grade concrete tunnel through which Zone I air is exhausted.

4.1.7 The Fan House is a two-story reinforced concrete building located approximately 300 feet south of the southwest corner of the Vitrification Building. It pulls the exhaust air through the sand filter and pushes it out the exhaust stack.

4.1.8 The Switchgear/Generator Building is a two-story reinforced concrete building located approximately 100 feet north and 150 feet east of the of the northeast corner of the Vitrification Building. Both the standby generators and switchgear are housed in this building.

4.1.9 The Waste Hold Tank (WHT) system consists of two separate structures. The WHT vault is a double-walled tank below grade with a steel framed metal structure above it. Attached to it is a concrete structure housing HVAC equipment.

4.1.10 The Exhaust Stacks include three metal stacks. The Zone 2 and 3 stack is located on the fourth floor of the Vitrification Building. The Zone 1 stack is located south of the Fan House Building. The Canister Storage Building stack is located adjacent to the Canister Storage Building.

4.1.11 Miscellaneous structures include the cooling tower, the solar evaporation tank, operations annex building, GFE warehouse and switchyard.

4.1.12 The Mech/Elect Services Building is a steel framed metal building housing HVAC and electrical equipment for plant operation. It is attached to the Vitrification Building along its east wall.

4.2 Design Criteria Documents

	Document Title (Abbreviated)	Reference Symbol/Number	Area of Coverage
4.2.1	HWVP Functional Design Criteria	SD-HWV-FDC-001	a. Classifications of structures, systems, and components b. Definition of Design Basis Accidents c. Primary Design Criteria
4.2.2	DOE General Design Criteria	DOE 6430.1A	a. General architectural and structural requirements

	Document Title (Abbreviated)	Reference Symbol/Number	Area of Coverage
4.2.3	Hanford Plant Standards Standard Design Criteria Design Loads for Facilities	HP-SDC-4.1 Rev. 11	a. Establishes general design requirements and design load criteria for tornado, earthquake, ashfall, wind and soil loads
4.2.4	Hanford Plant Standards General Design Criteria Hanford and National Codes and Standards	HP-SDC-1.2 Rev. 9	a. Establishes general design standards
4.2.5	Hanford Plant Standards Architectural Design Criteria	HP-SDC-2.1	a. General architectural design requirements
4.2.6	Minimum Design Loads 1982	ANSI A58.1	a. Defines live, snow, and wind loads
4.2.7	Uniform Building Code 1988	UBC	a. Defines earthquake loading for Safety Class 3 and 4 buildings and structures
			b. Masonry design
			c. Fire-resistive standards
			d. Wood design
			e. Building classification and exiting requirements
4.2.8	Uniform Plumbing Code 1988	UPC	a. Plumbing design
4.2.9	National Fire Protection Association	NFPA-101	a. Building - Life and Safety Codes
4.2.10	AISC Manual of Steel Construction Ninth Edition	AISC	a. Details of structural steel design

	Document Title (Abbreviated)	Reference Symbol/Number	Area of Coverage
4.2.11	OSHA Part 1910	OSHA Subpart D	a. Guardrails, handrails, stair treads, ladders
4.2.12	Structural Welding Code AWS D1.1-84	AWS D1.1	a. Structural welds
4.2.13	DOE/TIC-11603	DOE	a. Good practices guide
4.2.14	AISI Specification for design of Cold Formed Steel Structural Members 1986 Edition	AISI	a. Light gauge cold formed steel design
4.2.15	Environmental Protection, Safety and Health Protection Program for DOE Operations	DOE 5480.1A	a. Environmental protection safety
4.2.16	Federal Property Mgmt. Regulations	D-73	a. Office space utilization
4.2.17	HWVP Technical Data Package	SD-HWV-DP-001	a. Access and security Section 5, Item 120
			b. Facility: Service Bldg. Section 5, Item 300
4.2.18	Standards for Surface Flammability of Carpets and Rugs	16 CFR 1630	a. Fire-resistive standards
4.2.19	Uniform Federal Accessibility Standards	40 CFR 101-19.6	a. Handicapped Provisions
4.2.20	American National Standards Institute	ANSI	a. Handicapped Provisions
4.2.21	Aluminum Association	AA	a. Standards for Aluminum Finishes
4.2.22	American Architectural AAMA Manufacturer Association	AAMA	a. Aluminum Window Standards

	Document Title (Abbreviated)	Reference Symbol/Number	Area of Coverage
4.2.23	American Plywood	APA Association	a. Performance Standards for Plywood
4.2.24	Ceiling and Interior Systems Contractors Association	CISCA	a. Use and Practices for Acoustical Ceilings
4.2.25	Carpet and Rug Institute	CRI	a. Carpet Standards
4.2.26	Exterior Insulation Manufacturers Association	EIMA	a. Guideline specifications for Exterior Insulation
4.2.27	Insulated Steel Door Systems Institute	ISDSI	a. Installation Standards for Steel Doors
4.2.28	Metal Building Manufacturers Association	MBMA	a. Metal Building Design
4.2.29	National Association of Architectural Metal Manufacturers	NAAMM	a. Metal Finishes Manual
4.2.30	National Roofing Contractors Association	NRCA	a. Roof Design
4.2.31	Steel Deck Institute	SDI	a. Roof Deck Design b. Ceiling Deck Design
4.2.32	Steel Door Institute	SDI	a. Steel Door Standards
4.2.33	Sheet Metal and Air Conditioning Contractors National Association	SMACNA	a. Architectural Sheet Metal Manual
4.2.34	Single Ply Roofing Institute	SPRI	a. Roofing Design
4.2.35	Steel Window Institute	SWI	a. Steel Window Specifications
4.2.36	Tile Council of America	TCA	a. Ceramic Tile Design

	Document Title (Abbreviated)	Reference Symbol/Number	Area of Coverage
4.2.37	National Bureau of Standards, Product Standards	NBS	a.Lumber Design
4.2.38	West Coast Lumber Inspection Bureau	WCLIB	a.Lumber Standards
4.2.39	Architectural Woodwork Institute	AWI	a.Finish Carpentry Standards
4.2.40	National Electrical Manufacturers Association	NEMA	a.High Pressure Laminate Standards
4.2.41	American Wood Preservers Association	AWPA	a.Wood Treatment Standards
4.2.42	American Wood Preservers Bureau	AWPB	a.Wood Treatment Standards
4.2.43	National Coil Coaters Association	NCCA	a.Painting Requirements for Building Siding
4.2.44	Factory Mutual	FM	a.Fire and Safety Requirements
4.2.45	Underwriters Laboratory	UL	a.Fire and Safety Requirements
4.2.46	Federal Specification	FS-WW-P-541	a.Plumbing Fixtures

4.3 Architectural Design Requirements

4.3.1 Building Exits

Exits will be provided with a maximum safe travel distance of 150 ft. to fire protected way of travel to the exit discharge in accordance with NFPA-101, Life Safety Code. Travel distance to exits in high hazard occupancies will not exceed 75 ft.

4.3.2 Design Basis for Personnel and Services

4.3.2.1 Provisions for toilet facilities, lockers, soiled laundry facilities, and lunch room space will be based on approximately 200 operating personnel required to run the plant, with an approximate number of 107 in the Vitrification and Operations

Control/Regulated Entrance Building during the day shift. The design will presume a population mix ratio of 80% men and 20% women to quantify toilet facilities and lockers.

4.3.2.2 Except for the regulated change rooms, the Operations Control/ Regulated Entrance Building will be designed to eliminate mobility barriers, making the building accessible and usable by the physically handicapped, in compliance with ANSI Standard A117.1 and Uniform Federal Accessibility Standard 40 CFR 101-19.6.

4.3.3 System Design Requirements

System designs will be provided for the following architectural/ plumbing systems:

4.3.3.1 Roof Drainage, in accordance with Hanford Plant Standard SDC-2.1

4.3.3.2 Potable Water, in accordance with Uniform Plumbing Code, 1988

4.3.3.3 Sanitary Waste, in accordance with Uniform Plumbing Code, 1988

4.3.3.4 Personnel Decon Waste, in accordance with Uniform Plumbing Code, 1988

4.4 General Design Requirements

The following criteria will apply to all buildings:

4.4.1 Roofs

4.4.1.1 Roof decks will slope a minimum of 1/4 inch per foot.

4.4.1.2 Interior roof drains or exterior roof drains and gutters will be used in locations where temperatures remain above freezing. Where temperatures remain below freezing, and freezing of gutters or downspouts may occur, only interior roof drains will be used, except that exterior overflow outlets are permitted.

4.4.1.3 The roofing system including, but not limited to, metal decking, insulation, roofing membrane, flashings and fastening system will meet the requirements of the Factory Mutual, Class I rating and the Underwriters Laboratory label, Class A rating. The roofing system will also meet the Factory Mutual Windstorm Resistance Classification, I-90.

4.4.1.4 Access will be provided to roof areas by exterior ladders or from stairwells as required by code.

4.4.1.5 Roof drainage system shall be designed based on a maximum rainfall specified in Section 10, Appendix 10E.

4.4.1.6 Flashing and installation details will comply with the "Roofing and Waterproofing Manual," of the National Roofing Contractors Association.

4.4.2 Pedestrian Doors

4.4.2.1 In general, doors will be flush panel, hollow metal, 3'-0" x 7'-0" x 1-3/4" thick, with pressed metal frame, meeting the requirements of the "Hollow Metal Technical and Design Manual," of the National Association of Architectural Metal Manufacturers. Special conditions may require larger openings.

4.4.2.2 Hollow metal door openings requiring glass will be glazed with 1/4-inch thick clear wired glass.

4.4.2.3 Doors restricted by security requirements and doors to storage, janitor, toilet and equipment rooms will be flush, unglazed.

4.4.2.4 Doors in fire rated walls and partitions will be labeled in accordance with NFPA Standards and tested and listed by UL or FM.

4.4.2.5 Exterior pedestrian doors will be provided with suitable ramps, stoops or landings with nonslip surface.

4.4.2.6 Special doors with opening and filters, to accommodate airflow, will be determined during definitive design.

4.4.3 Door Hardware and Weatherstripping

4.4.3.1 Door hardware will conform to the requirements of various applicable Federal Specifications.

4.4.3.2 Doors requiring locksets will be designed to accommodate a standard (1-1/8" nominal diameter) 5 pin cylinder, in accordance with Hanford Plant Standards, SDC-2.1.

4.4.3.3 Doors designated as emergency exits will be provided with panic hardware, sometimes referred to as exit bolts or panic bolts.

4.4.3.4 Exterior doors and specified interior doors will be provided with aluminum thresholds and weatherstripping to minimize air leakage and air infiltration.

4.4.4 Door Control Systems

4.4.4.1 Doors within the facility that open into air locks will be interlocked to allow correct operation. The interlocks will operate with power on, but they can be overridden, if necessary, by activating a switch. In the case of an emergency evacuation, manually operated panic hardware will allow egress from the building.

4.4.4.2 Certain doors throughout the process building/support building complex will require security intrusion detection systems and card access control devices. See Instrumentation and Control Systems Design Basis.

4.4.5 Interior Finishes

4.4.5.1 A finish schedule will be provided on the definitive design drawings, showing the materials of construction and finish for the different rooms and areas within all buildings.

4.4.5.2 Interior finish materials will conform to NFPA-101, "Life Safety Code." Flame spread ratings will not exceed 25; smoke developed ratings will not exceed 50.

4.4.5.3 Floors:

Floor finishes shall be selected according to the anticipated use.

4.4.5.4 Wainscot:

Wainscots to be 4'-0" high unless otherwise noted. Ceramic tile wainscots will be full height.

4.4.5.5 Gypsum Board:

Provide moisture-resistant gypsum board in rooms or areas (toilet rooms, janitor rooms, etc.) that are subject to the introduction of moisture, and as a base for the installation of ceramic tile walls.

4.4.5.6 Painting:

Paint all exposed surfaces, including exterior galvanized metal, except for factory finished and painted items such as finished door hardware and suspended exposed grid ceiling systems. Note: Interior galvanized metal, including HVAC galvanized ductwork, will not be painted.

4.4.6 Plumbing Systems and Fixtures

Underground plumbing systems shall conform to the Uniform Plumbing Code and shall terminate and interface at a point 5 feet outside the perimeter walls of the buildings with the piping and/or the civil disciplines.

4.4.7 Signage

Throughout the building complex, a variety of signage will be provided, indicating room names and/or numbers, exit signs indicating exit doors and exit directions, and a variety of caution signs

indicating radiation zones. These signs will comply with the Uniform Building Code and the Hanford Plant Standards, as applicable. All signage will be furnished and installed by the operations and engineering contractor.

4.5 Vitrification Building Design Requirements

4.5.1 Exterior Walls

The HVAC housing on the fourth floor will be enclosed with factory-insulated metal siding panels with a thermal resistance value of R-11, attached to a structural steel framing system. Total panel assembly will be UL Class 1 rated and have a maximum flame spread of 25, fuel contributed of 20 and smoke developed of 45, in accordance with ASTM E 84.

4.5.2 Interior Partitions

4.5.2.1 Drywall type, fire rated per UBC. Wall framing will be minimum 20 gage galvanized metal, meeting the requirements of ASTM A-446, Grade D, with a minimum yield of 50,000 psi.

4.5.2.2 Penetrations through fire rated assemblies shall be sealed with a fire-resistant grout or sealant of equal rating.

4.5.3 Ceilings

Suspended acoustic ceilings or gypsum board ceilings will be provided to fulfill functional requirements.

4.5.4 Roofing: Concrete Areas

Roof covering will be a single ply membrane, nonballasted system with rigid insulation board having a thermal resistance value of R-17. Elastomeric coatings may be used in lieu of a single ply membrane where insulation is not required or is to be applied below the structural deck.

4.5.5 Roofing: Structural Steel Framed Areas

The roof system will consist of welded metal decking covered with rigid insulation and a single ply membrane. The minimum thermal resistance of the roofing system will be R-17.

4.5.6 Exterior Pedestrian Door Openings

Exterior pedestrian door openings from the hardened concrete portion of the Process Building shall be protected to prevent the Design Basis wind generated missiles from making a direct impact on the door.

4.5.7 Industrial Service Doors

4.5.7.1 In general, service doors will be motor-operated, insulated sectional overhead or telescoping type, complete with tight-fitting weatherstripping that will provide a maximum air-infiltration rate of 0.93 cfm per linear foot of perimeter at 1.56 psf of air pressure differential, when tested in accordance with ASTM E-283.

4.5.7.2 Doors will have a total maximum thermal transmittance or "U" factor of 0.51 in accordance with ASTM C-236.

4.5.8 Coatings for Chemical and Decontamination Service

Protective coatings to be used in the more aggressive chemical environments will be one of those coatings outlined in DG-503-AC of the Hanford Plant Standards.

4.5.9 Plumbing Fixtures

Plumbing fixtures shall be in accordance with the Hanford Plant Standards, the Uniform Plumbing Code and the Federal Specification FS-WW-P-541.

4.5.9.1 Emergency Shower/Eyewash

Emergency shower/eyewash stations shall conform to Hanford Plant Standards M-2-18 and M-2-19 or be similar to "HAWS" Model No. 8330 or 8316.

4.5.10 Specialties

4.5.10.1 Access Flooring

Provide access floor system (computer floor) with anti-static high pressure plastic laminate surface and grounding connectors as shown on the drawings. Floor drains will be provided where floor slabs are depressed.

4.5.10.2 Fire Extinguishers

Provide UL-approved portable fire extinguishers (minimum 2A 40BC) in surface-mounted or semi-recessed cabinets, in accordance with NFPA 10.

4.6 Operations Control/Regulated Entrance Building

4.6.1 General

Except for the regulated change rooms, the Operations Control/ Regulated Entrance Building are designed to eliminate mobility barriers, making the building accessible and usable by the

physically handicapped, in compliance with ANSI Standard A117.1 and Uniform Federal Accessibility Standard 40 CFR 101-19.6.

The building encompasses, but is not limited to, the following:

- Conference room
- Central control room
- Offices
- Computer rooms
- Lunch room
- Toilet and shower facilities
- Health protection facilities
- Locker/change rooms
- Regulated change rooms
- Clean and soiled laundry storage
- HVAC/mechanical/communication equipment rooms

4.6.2 Exterior Walls

The exterior wall system will consist of insulated metal siding attached to a structural steel framing system. The minimum thermal resistance of the siding system will be R-11. Non-insulated panels may be used in lieu of insulated panels if metal studs, drywall, and batt R-11 insulation are more appropriate.

4.6.3 Interior Partitions

Drywall type: fire rated in accordance with UBC. Wall framing will be minimum 20 gage galvanized metal meeting the requirements of ASTM A-611, Grade C, with a minimum yield of 33,000 psi.

4.6.4 Ceilings

4.6.4.1 Suspended exposed grid with acoustic lay-in panels in all rooms and areas except equipment rooms, toilet, shower and change rooms.

4.6.4.2 Toilets, shower and change rooms shall have a suspended moisture-resistant gypsum wallboard ceiling.

4.6.5 Roofing

The roof system will consist of welded metal decking covered with rigid insulation and a single ply membrane. The minimum thermal resistance of the roofing system will be R-17.

4.6.6 Aluminum Entrance and Windows

4.6.6.1 Aluminum framing will be fabricated from 6063-T5 extruded aluminum alloy, meeting the requirements of AAMA, the Architectural Aluminum Manufacturers Association; ANSI, American National Standards Institute, and applicable ASTM standards. Color to be per Aluminum Association Standards.

4.6.6.2 Glass shall meet the requirements of SIGMA, Sealed Insulating Glass Manufacturers Association.

4.6.7 Plumbing Facilities

4.6.7.1 Minimum plumbing facilities will be provided in accordance with the Hanford Plant Standard SDC-2.1 and the Uniform Plumbing Code.

4.6.7.2 Toilet/Locker/Change rooms will be equipped with water closets, lavatories, urinals, and showers.

4.6.7.3 The lunch room will be equipped with a standard double sink and a drinking fountain.

4.6.7.4 The janitor closet will be equipped with a standard service sink.

4.6.7.5 Hot water will be provided by an electric heating system.

4.6.8 Toilet Room Accessories

All toilet room accessories shall comply with applicable sections of the Federal Specifications.

Each toilet room will be equipped, as required, with ceiling hung toilet partitions and wall-mounted urinal screens, mirrors and shelves, soap dispensers, waste receptacles, paper towel dispensers, and sanitary napkin dispensers, in accordance with the Hanford Plant Standard SDC-2.1.

4.6.9 Specialties

4.6.9.1 Fire Extinguishers

Provide UL-approved portable fire extinguishers (minimum 2A 40BC) in surface-mounted or semi-recessed cabinets in accordance with NFPA 10.

4.6.9.2 Kitchen Equipment

The lunch room will be provided with a premanufactured kitchen unit consisting of an electric refrigerator, storage cabinets, garbage disposer, electric surface-mounted cooking units, microwave oven, sink and countertop.

4.6.9.3 Lockers

Double-tier, baked enamel finish with sloping top, sitting on a concrete base.

4.6.9.4 Benches

Metal base with solid wood top.

4.6.9.5 Cabinet and Casework

Plastic covered wood to comply with requirements of the American Woodwork Institute (AWI).

4.6.9.6 Countertops

Plastic laminate conforming to NEMA Standard LD3.

4.7 Drawing and Specification Procedures

4.7.1 Drawing Procedures

Drawings shall be prepared at standard scales of the architectural profession in sufficient detail to define the physical relationships of materials proposed to be used in the project.

4.7.2 Specification Procedures

Specifications will be prepared conforming to the CSI three-part format and will define the quality and types of workmanship and materials proposed to be used in the project.

SECTION 5.0

ELECTRICAL ENGINEERING AND DESIGN (SYSTEM 31-35 AND 65)

TABLE OF CONTENTS

Section		Page
5.1	SCOPE	1
5.1.1	ENGINEERING AND DESIGN REQUIREMENTS	1
5.1.2	ELECTRICAL DESIGN	1
5.1.3	ELECTRICAL DESIGN INTERFACE	2
5.2	CODES AND STANDARDS	3
5.2.1	TECHNICAL REQUIREMENTS BASELINE	3
5.2.2	GOVERNING REGULATIONS	3
5.3	GENERAL CONSIDERATIONS	4
5.3.1	SAFETY CLASSIFICATION	4
5.3.2	QUALITY ASSURANCE IMPACT LEVELS	5
5.3.3	ACCESS AND WORKING SPACE	5
5.3.4	ENERGY CONSERVATION	5
5.3.5	SPARE CAPACITY	5
5.4	ELECTRICAL DESIGN CONSIDERATIONS AND STANDARD PRACTICES	6
5.4.1	GENERAL DESIGN CONSIDERATIONS	6
5.4.2	VOLTAGE LEVELS	6
5.4.3	SYSTEM VOLTAGE DROP CRITERIA	7
5.4.4	BASIS FOR SELECTION OF EQUIPMENT AND FEEDER RATINGS	7
5.4.5	ELECTRICAL SYSTEM PROTECTION	8
5.4.6	ENVIRONMENTAL AND OPERATING CONDITIONS	8
5.4.7	EQUIPMENT AND MATERIAL QUALITY	9
5.4.8	EQUIPMENT IDENTIFICATION	9
5.4.9	INDICATING LIGHTS	11
5.4.10	CONDUIT AND WIRE IDENTIFICATION	11
5.4.11	CALCULATIONS AND ANALYSES	14
5.5	SPECIFICATIONS	16
5.6	DRAWINGS	16
5.7	ELECTRICAL POWER SYSTEMS	17
5.7.1	TEMPORARY CONSTRUCTION POWER	17
5.7.2	INCOMING POWER	17
5.7.3	NORMAL 13.8 KV POWER SYSTEM	18
5.7.4	STANDBY 13.8 KV POWER SYSTEM	19
5.7.5	480 VOLT LOAD CENTERS	19
5.8	EMERGENCY POWER SYSTEMS	20
5.8.1	UNINTERRUPTIBLE POWER SUPPLY (UPS) SYSTEM	20
5.8.2	DC SYSTEM	21

SECTION 5.0

TABLE OF CONTENTS

Section		Page
5.9	ELECTRICAL EQUIPMENT	21
5.9.2	13.8 KV SWITCHGEAR	21
5.9.3	LOAD CENTER TRANSFORMERS	22
5.9.4	480 VOLT LOAD CENTER SWITCHGEAR	22
5.9.5	480 VOLT MOTOR CONTROL CENTERS	23
5.9.6	STANDBY GENERATORS	24
5.9.7	DISTRIBUTION TRANSFORMERS	24
5.9.8	PANELBOARDS	24
5.9.9	UNINTERRUPTIBLE POWER SUPPLY (UPS) SYSTEM	24
5.9.10	STATION BATTERIES AND CHARGERS	25
5.10	MOTORS	25
5.11	POWER FACTOR	25
5.12	LIGHTING	26
5.12.1	EXTERIOR LIGHTING	26
5.12.2	INTERIOR LIGHTING	27
5.13	CONVENIENCE RECEPTACLES	29
5.14	POWER RECEPTACLES	29
5.15	CONTROL STATIONS AND SWITCHES	30
5.16	RACEWAY SYSTEMS	30
5.16.1	GENERAL RACEWAY REQUIREMENTS	30
5.16.2	UNDERGROUND CONDUIT	30
5.16.3	ABOVEGROUND CONDUIT AND RACEWAY	31
5.16.4	CABLE TRAYS	31
5.16.5	FIRE STOPS	31
5.16.6	SEALING	31
5.16.7	PENETRATIONS	31
5.17	SEPARATION OF CIRCUITS	31
5.18	WIRE AND CABLE	32
5.19	GROUNDING	32
5.19.1	GROUNDING SYSTEM	32
5.19.2	GROUNDING MATERIALS AND METHODS	32
5.20	LIGHTNING AND SURGE PROTECTION	33
5.21	ELECTRIC HEAT TRACING	33

5.0 ELECTRICAL ENGINEERING AND DESIGN

5.1 SCOPE

5.1.1 ENGINEERING AND DESIGN REQUIREMENTS

This document covers the general engineering and design requirements of the electrical systems for the Hanford Waste Vitrification Plant (HWVP) to be constructed within the 200 East Area of the DOE Hanford Site in the State of Washington.

5.1.2 ELECTRICAL DESIGN

The electrical design will include all applicable elements as defined in this document for the following buildings, facilities and systems:

a. Vitrification Building;

b. Manipulator Repair Building;

c. Canister Storage Building;

d. Fan House;

e. Sand Filter Building;

f. Mech/Elect Service Building;

g. Frit/Cold Chemical Building;

h. Operations Control/Regulated Entrance Building;

i. Switchgear/Generator Building;

j. Operations Annex Building;

k. WHT Building;

l. Cooling Tower;

m. Switchyard;

n. 230kV incoming power lines;

o. Tie-ins to existing Supervisory Control and Data Acquisition (SCADA) network for control and monitoring of the Switchyard 230 KV and 13.8 KV systems;

p. Construction power, installation and removal;

q. Construction communications, installation and removal;

r. Lighting systems, interior and exterior;

s. Communications systems including tie-ins to Hanford Site systems;

t. Grounding system;

u. Lightning and surge protection system;

v. Cathodic protection system;

w. Electrical distribution systems:

- Normal power
- Standby power
- Uninterruptible Power Supply (UPS)
- Direct Current (DC)

x. Instrumentation wiring.

5.1.3 ELECTRICAL DESIGN INTERFACE

5.1.3.1 The electrical design will interface with the following systems:

a.	Fire Detection and Alarm	Mechanical and Control Systems
b.	Interior Alarms	Control Systems
c.	Airlock Controls	Architectural
d.	Door Controls	Mechanical
e.	Cathodic Protection	Piping
f.	Instrumentation Wiring	Control Systems
g.	In-Cell Wiring	Remote Systems

Definition of these systems is found in the Design Guide under their respective discipline design basis.

5.1.3.2 The electrical design will interface with the following existing systems:

a. 230 kV Hanford transmission loop;

b. 13.8 kV distribution system;

c. Hanford SCADA network for control and monitoring of the 230 KV - 13.8 KV substation equipment.

d. Communications systems including:

- Telephone System
- Radio System
- Area and Plant-wide Alarm Systems

Definition of these interfaces (physical and functional) will be documented in accordance with the Project Management/Control Manual.

5.2 CODES AND STANDARDS

5.2.1 TECHNICAL REQUIREMENTS BASELINE

This design guide is based on the following:

a. SD-HWV-FDC-001 Hanford Waste Vitrification Plant Functional Design Criteria.

b. SD-HWV-DP-001 Hanford Waste Vitrification Plant Technical Data Package.

5.2.2 GOVERNING REGULATIONS

The following codes and standards will govern the electrical design of this project. The latest edition in effect on June 1, 1989 shall be used unless specific editions and/or revisions are indicated as applicable:

ANSI C2	National Electrical Safety Code.
ANSI C84.1	Electric Power Systems and Equipment - Voltage Ratings (60 Hz).
ANSI N290	Design, Construction and Operation of Ventilation Systems for Mixed Oxide (UO - PuO) Fuel Fabrication Plants.
ASHRE 90-75R	Energy Conservation in New Building Design.
ASTM B1	Specification for Hard-Drawn Copper Wire.
ASTM B8	Specification for Concentric-Lay-Stranded Copper Conductors, Hard, Medium-Hard, or Soft.
41 CFR 101	Federal Property Management Regulations
DOE 6430.1A (4/6/89)	General Design Criteria.
Fluor Daniel, Inc.	Electrical/Control Systems Engineering Applications Guide.

FM	Factory Mutual.
FS W-C-596	Federal Specifications, General for Connector, Electrical, Power.
HPS-SDC-1.2	Hanford Plant Standards and National Codes and Standards.
IEEE 80	Guide for Safety in Substation Grounding.
IEEE 379	Standard Application of the Single Failure Criterion to Nuclear Power Generating Station Class 1E Systems.
IEEE 384	Standard Criteria for Independence of Class 1E Equipment and Circuits.
IEEE 739	Recommended Practice for Energy Conservation and Cost-Effective Planning in Industrial Facilities.
IES Handbook	Illuminating Engineering Society Handbook.
NEMA ICS Series	Industrial Controls and Systems.
NEMA 250	Enclosures for Electrical Equipment (1000 Volts Maximum).
NEMA MG-1	Motors and Generators.
NEMA PB1	Panelboards
NFPA 70	National Electrical Code
NFPA 78	Lightning Protection Code.
NFPA 101	Life Safety Code.
UL	Product Directories.

5.3 GENERAL CONSIDERATIONS

5.3.1 SAFETY CLASSIFICATION

The primary power and normal power systems are Safety Class 3 because of occupational hazards. Portions of the standby power, Uninterruptible Power Supply (UPS), and DC Power Systems must be Safety Class 1 or Safety Class 2 where required to support the function of other Safety Class 1 or 2 systems. For instance, the HVAC Zone I effluent in-duct monitor must have a Safety Class 1 UPS supply. Safety Class 1 or 2 UPS and DC Systems will comply with the guidelines established for the availability, single point failure, independence and redundancy of safety class circuits and equipment.

For detailed information see Section 2.5.

5.3.2 QUALITY ASSURANCE IMPACT LEVELS

Application of the Quality Assurance program requirements will take into consideration the impact levels (FDC-7.0) described in Section 2.5.4.

5.3.3 ACCESS AND WORKING SPACE

Sufficient access to and working space about electrical equipment will be provided to permit ready and safe operation and maintenance of such equipment. Access and working space will be in accordance with Article 110 of NFPA-70, National Electrical Code.

5.3.4 ENERGY CONSERVATION

5.3.4.1 Electrical system planning and equipment selection will maximize efficient energy usage and will minimize energy losses within the electrical system on a life cycle cost effective basis. Industrial systems will comply with IEEE 739. Commercial systems will comply with ASHRE Standard 90. (6430.1A-1694-1)

5.3.4.2 A microprocessor based monitoring system will monitor plant energy consumption and power distribution on all 13-8 KV distribution feeders.

5.3.4.3 Energy conservation measures will include:

a. Use of high efficiency lamps, ballasts and luminaries.

b. Use of high efficiency transformers.

c. In areas which are not normally occupied, switches will be provided to permit de-energizing lighting circuits.

5.3.5 SPARE CAPACITY

5.3.5.1 For preliminary design the normal demand load on power transformers which are part of double-ended load centers will not exceed 50 percent of the self-cooled rating. Provision for forced cooling will allow spare capacity for uncertainties during detailed design and for future loads.

5.3.5.2 Switchgear bus capacity will accommodate the maximum transformer loading with forced cooling.

5.3.5.3 Standby generator rating will exceed the preliminary design estimated load by 30 percent to accommodate future loads and for uncertainties during detailed design. (TDP-Section 9, Item 320)

5.3.5.4 Batteries for UPS and dc supply will be sized such that they will be 75 percent loaded to allow for inaccuracies in estimating loads on these systems. (TDP-Section 9, Item 420)

5.3.5.5 UPS inverters will be sized such that they will be 75 percent loaded to allow for inaccuracies in estimating loads on these systems. (TDP-Section 9, Item 440)

5.3.5.6 Distribution and lighting panelboards will be sized for an additional future load of 25 percent of the initial operating load.

5.3.5.7 Aboveground conduit runs or racks containing four or more conduits on a level, will be provided with a minimum of six inches of space for future use. Conduit runs or racks with less than four conduits on a level will be provided with space for one future conduit suitable for the largest conduit on the rack. Where the design indicates that future access for installation of conduit is blocked, spare conduit will be provided in the initial installation.

5.4 ELECTRICAL DESIGN CONSIDERATIONS AND STANDARD PRACTICES

5.4.1 GENERAL DESIGN CONSIDERATIONS

The electrical design will, in general, conform to the requirements of:

a. ANSI C2 National Electrical Safety Code

b. NFPA 70 National Electrical Code

c. DOE 6430.1A General Design Criteria (4-6-89)

5.4.2 VOLTAGE LEVELS

5.4.2.1 The following voltage levels will be utilized as indicated:

Voltage	Application
230 kV, 3 phase, 60 Hz	Primary power source.
13.8 kV, 3 phase, 60 Hz	Normal supply. Standby System generation.
480V, 3 phase, 3 wire, 60 Hz	Power distribution and utilization.
480/277V, 3 phase, 4 wire, 60Hz	Lighting.

208/120V, 3 phase, 4 wire, 60Hz	Lighting, convenience receptacles and UPS
125V dc	Switchgear control, indication and alarm.

5.4.2.2 System and equipment voltage ratings will comply with ANSI C84.1. (6430.1A-1605-1)

5.4.3 SYSTEM VOLTAGE DROP CRITERIA

System voltage drop criteria and limits will be as follows:

5.4.3.1 Power transformers will be directly connected to secondary switchgear, with essentially zero voltage drop in the connection.

5.4.3.2 Transformer regulation will not be considered for normal operating conditions since transformer taps will be set to obtain specified bus voltage level under normal load conditions.

5.4.3.3 Transformer (or system) impedance will be considered for voltage drop calculations during starting of large motors and grouped motor reacceleration.

5.4.3.4 The allowable voltage drop in the cables during normal operation and based on full load conditions will not exceed the values on Attachment "A".

5.4.3.5 In all cases involving motor starting, the voltage at the motor terminals must be sufficient to ensure proper breakaway and acceleration of the motor. In general, the allowable voltage drop through the system to the source buses during motor starting will not exceed:

a. On the bus supplying the primary distribution system (13.8 kV switchgear) - 5 percent drop.

b. On the bus directly supplying motors (480V switchgear and motor control centers) - 15 percent drop.

5.4.4 BASIS FOR SELECTION OF EQUIPMENT AND FEEDER RATINGS

5.4.4.1 Voltage levels, insulation levels, continuous current ratings, interrupting capacities and circuit protection will be selected and coordinated in accordance with the recommendations of the standards and codes listed in Section 5.2.

5.4.4.2 Feeders to motor control centers, lighting transformers, and lighting and distribution panelboards will be sized to match the rating of the associated equipment.

5.4.4.3 Fault current rating of electrical equipment will be selected to exceed the available fault current, at that point, by a minimum of 20 percent. (TDP-Section 9, Item 560)

5.4.5 ELECTRICAL SYSTEM PROTECTION

5.4.5.1 Protective devices such as circuit breakers, fuses, relays, breaker trip units and overload devices, will be selected and applied to minimize damage to the electrical system and to limit the extent and duration of service interruptions due to overload or fault conditions. (6430.1A-1630-2.1 and 1640-1.6)

5.4.5.2 Preliminary relay, settings will be established and time vs. current curves will be plotted during the detailed design phase of the project to illustrate the coordination of the selected protective devices. Final relay settings and coordination will be performed during the construction support phase of the project following purchase of specific equipment and protective devices.

5.4.6 ENVIRONMENTAL AND OPERATING CONDITIONS

5.4.6.1 In general, electrical equipment will be located indoors in electrical equipment rooms or service areas, except for the following:

a. Switchyard equipment consisting of circuit breakers, disconnect switches, transformers and associated buses and structures.

b. Cooling tower motor control center.

5.4.6.2 Electrical equipment and material will be suitable for continuous operation at the following ambient temperatures:

Area	Design Ambient Temperature Range
Outdoors	101°F maximum, 9°F minimum
Indoors - general	40°C (104°F) maximum
Switchgear/Generator	Normal: 85°F maximum, 65°F minimum
Bldg. Switchgear Rooms	DBA: 120°F maximum
Generator Rooms	Normal: 104°F maximum, 65°F minimum
Battery Rooms	Normal: 72°F ± 2°F
In-cell:	
With personnel access	85°F maximum, 60°F minimum
No personnel access	104°F maximum, 60°F minimum

5.4.6.3 The altitude of the HWVP site is approximately 700 feet above mean sea level. No derating of electrical equipment due to altitude will be required since the site is within the 3,300 foot (1,000 meters) elevation considered standard for equipment dependent on air for cooling and/or insulation.

5.4.6.4 Wire and cable ampacities will be determined in accordance with Article 310 of the NEC.

5.4.6.5 Electrical enclosures will be in accordance with NEMA 250 and suitable for the environmental conditions encountered:

Area	Enclosure
Outdoor - general	NEMA 4, Weatherproof
Indoor - general	NEMA 1, General purpose
Indoor - Subject to decontamination or washdown.	NEMA 4X, Watertight, corrosion resistant
Cooling Tower Area	NEMA 3R, Weatherproof
Areas considered hazardous as defined by Article 500 of the NEC.	(TBD Detailed Design)

5.4.7 EQUIPMENT AND MATERIAL QUALITY

5.4.7.1 Electrical equipment and materials will be specified to be UL or FM tested, with label attached. Where there are no UL or FM listed products of the type specified, then testing and certification by another nationally recognized testing agency or other means to determine the suitability for its intended application will be pursued. (6430.1A-1605-1)

5.4.7.2 Electrical equipment, components and materials will be new, readily available and of proven design for the intended application.

5.4.8 EQUIPMENT IDENTIFICATION

5.4.8.1 Major items of electrical equipment will be identified by equipment numbers. Equipment to be so numbered includes:

a. Disconnect Switches

b. Switchgear

c. Transformers

d. Load Centers

e. Motor Control Centers

f. Distribution Panels

g. Lighting Panels

h. UPS

i. Batteries and Chargers

j. Circuit Breakers

k. Lightning Arresters

5.4.8.2 The electrical equipment numbering system will be as follows:

XX - XX X - X XX X

- X — Designation for similar or standby (1 alpha)
- XX — Sequential equipment number (2 digits)
- X — Prime equipment number (1 digit)
- X — Subsystem designation (1 alpha)
- XX — System designation (2 digits)
- XX — Equipment category (2 alpha)

Equipment Category

BA - Battery
BC - Battery Charger
CB - Circuit Breaker
DA - AC Distribution Panel
DD - Disconnect Switch
DX - DC Distribution Panel
LA - Lightning Arrester
LC - Load Center
LX - Lighting Panel
MC - Motor Control Center
SG - Switchgear
TG - Turbine Generator
UP - Uninterruptible Power Supply
XT - Transformer

System Designation

31 - Primary Electrical System
32 - Normal Electrical Distribution System
33 - Standby Electrical Distribution System
34 - Uninterruptible Power Supply System
35 - DC System

65 - Communications Systems

Subsystem Designation

A - Subsystem "A" or common equipment
B - Subsystem "B"

5.4.8.3 Equipment and device nameplates will be provided as follows:

Nameplate Engraving	Nameplate Background	Service or Function
Black	White	General Purpose
Black	Yellow	UPS, Emergency, Standby
White	Red	Danger, Caution, Personnel Hazard

5.4.9 INDICATING LIGHTS

Indicating lights for switchgear, load centers, motor control centers and control stations will be provided with color caps as follows:

a. Green - Circuit breaker open, Contactor open

b. Red - Circuit breaker closed, Contactor closed

c. Amber - Control Switch in "Auto" position

5.4.10 CONDUIT AND WIRE IDENTIFICATION

5.4.10.1 See Attachment "B" for conduit and wire identification on construction drawings and in the field.

5.4.10.2 Conduit and cable schedules will be prepared for the following systems:

a. Power and control

b. Instrumentation (Home runs only)

c. Communications (Home runs only)

5.4.10.3 For the following systems, conduit and wire will be identified on the drawings, but will not be listed in the conduit and cable schedules:

a. Instrumentation (Except home runs)

b. Communications (Except home runs)

c. Fire Alarm

d. Lighting

e. Heat Tracing

5.4.10.4 Junction and terminal box schedules will be prepared for the following systems:

a. Power and control

b. Instrumentation

c. Communications

d. Fire alarm

5.4.10.5 Power, control and instrumentation circuits will be physically labeled at their source and termination points.

5.4.10.6 Conductors for 240/120 volt, single phase systems will be color coded as follows: (6430.1A-1605-2.2.3)

a. Grounded neutral - White

b. Grounding conductor - Green or bare

c. Ungrounded conductor - Black

d. Ungrounded conductor - Red

5.4.10.7 Conductors for 208Y/120 volt, three-phase systems will be color coded as follows: (6430.1A-1605-2.2.3)

a. Grounded neutral - White

b. Grounding conductor - Green or bare

c. Phase "A" conductor - Black

d. Phase "B" conductor - Red

e. Phase "C" conductor - Blue

5.4.10.8 Conductors for 480Y/277 volt, three-phase systems will be color coded as follows: (6430.1A-1605-2.2.3)

a. Grounded neutral - Gray

b. Grounding conductor - Green or bare

c. Phase "A" conductor - Brown

d. Phase "B" conductor - Orange

e. Phase "C" conductor - Yellow

5.4.10.9 Conductors for 125 volt dc systems will be color coded as follows:

a. Positive - Red

b. Negative - Black

5.4.10.10 Lighting fixture wire will be color coded as follows:

a. Grounded conductor - White insulation or white braid

b. Ungrounded conductor - Black insulation or white braid with black tracer.

5.4.10.11 Insulated conductors intended solely for grounding purposes will be identified by a continuous green color insulation.

5.4.10.12 Grounded (neutral) conductors No. 2 AWG and smaller will have white or gray insulation as required by Paragraphs 5.4.10.6, 5.4.10.7 and 5.4.10.8 above. Grounded conductors larger than No. 2 AWG will also have white or gray insulation or will be identified at all terminal and junction points, splices and in each manhole or vault by wrapping with white or gray, self-adhesive, vinyl plastic electrical tape.

5.4.10.13 Control wiring conductors will have black insulation. Multiconductor control cables will have individual conductors numbered for identification, e.g., 1, 2, 3, etc.

5.4.10.14 Instrumentation cable will be color coded and identified as follows:

a. Single-pair and Triad Cables

1. The conductors in single-pair cables will be colored black and white.

2. The conductors in triad cables will be colored black, red and white.

b. Multi-pair Cable

1. The conductors in each twisted pair will be colored black and white.

2. Each conductor in a pair will be numbered and both conductors will have the same numbers, e.g., (1, 1), (2, 2), (3, 3), etc. Spacing between identification numbers will be a maximum of three inches.

c. Multi-triad Cable

1. The conductors on each triad will be colored black, red and white.

2. Each conductor in a triad will be numbered and the three conductors will have the same number, e.g., (1, 1, 1), (2, 2, 2), etc. Spacing between identification numbers will be a maximum of three inches.

5.4.10.15 Color coding and identification of fire alarm system wiring will be as follows:

Red - Initiating device, input to Fire Alarm Panel.

Violet Purple - Alarm device, output from Fire Alarm Panel.

Blue - Output from Fire Alarm Panel to devices other than alarms.

Yellow - Supervisory device, input to Fire Alarm Panel.

Orange - Wiring between Fire Alarm Panel and Radio Fire Alarm Repeater to indicate panel status.

Black - Incoming power (phase/line) to the Fire Alarm Panel, Radio Fire Alarm Repeater or indicating light.

White - Incoming power (neutral) to the Fire Alarm Panel, Radio Fire Alarm Repeater or indicating light.

Green/Bare - Ground wire.

Brown - Battery wiring.

5.4.10.16 Color coding and identification of communications system wiring will be (TBD Detail Design).

5.4.10.17 Color coding and identification of wiring supplied by equipment vendors will be the vendor's standard.

5.4.11 CALCULATIONS AND ANALYSES

5.4.11.1 The following calculations and analyses will be performed during the detailed design phase of the project:

a. Building and system load analysis.

b. System short circuit.

c. Equipment heat dissipation.

d. Battery and battery charger rating.

(Reference Fluor Daniel Electrical/Control Systems Engineering Applications Guide, Section 7.1, Considerations for Selecting and Sizing Batteries and Battery Chargers)

e. Battery hydrogen emission.

f. Voltage drop.

g. Illumination levels

h. Heat tracing.

(Reference Fluor Daniel Electrical/Control Systems Engineering Applications Guide, Section 12.1, Electrical Heat Tracing Calculations)

i. Pole line calculations including sag/tension and guying.

j. Cable pulling calculations for underground duct runs.

(One set of calculations for identical systems will be adequate.)

5.4.11.2 The following preliminary coordination curves and settings will be developed during the detailed design phase:

a. Protective relay coordination curves.

(Reference Fluor Daniel Electrical/Control Systems Engineering Applications Guide, Section 14.0, Protective Relaying)

b. Relay settings.

(Reference Fluor Daniel Electrical/Control Systems Engineering Applications Guide, Section 14.0, Protective Relaying)

c. Feeder circuit breaker trip settings.

d. UPS coordination curves.

(Reference Fluor Daniel Electrical/Control Systems Engineering Applications Guide, Section 8.2, UPS Short Circuit Calculations, Fuse and Breaker Coordination Studies)

(The above curves and settings will be adjusted as required during construction coordination to match purchased equipment.)

5.4.11.3 The following settings for motor control center components will be developed during construction coordination following receipt of vendor data:

a. Motor circuit protector settings.

b. Overload relay selection and settings.

5.5 SPECIFICATIONS

5.5.1 Specifications will be prepared in accordance with procedure number 3 of the DCPM volume of the PM/CM.

5.5.2 Specifications will be prepared to define all electrical equipment and materials, and their installation and testing.

5.5.3 The specifications which will be prepared during preliminary design are listed on Attachment "C."

5.5.4 The specifications which will be prepared during detailed design are listed in attachment "E".

5.6 DRAWINGS

5.6.1 Drawings will be prepared in accordance with Section 4.4 of the PM/CM.

5.6.2 The following categories of electrical drawings will be prepared:

a. One-Line Diagrams.

b. Grounding and Lightning Protection.

c. Underground Conduit.

d. Power.

e. Lighting.

f. Instrumentation.

g. Elementary Diagrams.

h. Connection Diagrams.

i. Heat Tracing.

j. Communications.

k. Legend, Symbols and General Notes.

l. Standard Assemblies.

m. Conduit Schedules.

n. Circuit Schedules.

o. Transmission Line

- Plan and Profile
- Details
- Schedule.

p. Cathodic Protection.

5.6.3 The drawings which will be prepared during preliminary design are listed on Attachment "D."

5.7 ELECTRICAL POWER SYSTEMS

Refer to Drawing No. H-2-122009, Sheets 1 through 3, for Electrical Overall System One-Line Diagram.

5.7.1 TEMPORARY CONSTRUCTION POWER

5.7.1.1 The temporary 13.8 kV construction power electrical distribution system will receive its supply from existing 13.8 kV pole line circuit number C8-C7. The incoming 13.8 kV source will supply a 13.8 kV switchgear. Direct burial 15 kV cable will be routed underground from the pole line service drop to the 13.8 kV switchgear.

5.7.1.2 Primary distribution will consist of 13.8 kV underground radial distribution systems from the 13.8 kV switchgear to individual outdoor 13.8 kV-480/277 volt pad mount transformers. Each 15 kV direct burial radial distribution feeder will originate on the load side of a 13.8 kV switchgear feeder breaker and will be routed underground to a transformer high voltage compartment for termination.

5.7.1.3 Switchracks will supply power at utilization voltage for secondary distribution. The switchrack power supply circuit will originate at the 13.8 kV-480/277 volt transformer secondary feeder breaker located in the transformer low voltage compartment and, will be routed in conduit to the switchrack. Each switchrack will consist of multiple rack mounted fused disconnect switches connected to a common 480/277 volt bus. Construction contractors point of connection for construction power is at the load side of the switchrack fused disconnect switches.

5.7.2 INCOMING POWER

5.7.2.1 The source of power for the HWVP Primary Power Supply (System 31) will be the 230 kV Hanford transmission loop which is supplied from the Bonneville Power Administration system. The loop will be modified to add a new 230-13.8 kV switchyard in the vicinity of the HWVP site.

5.7.2.2 The 230-13.8 kV switchyard will include two 230-13.8 kV transformers and necessary circuit breakers, switches and protective relaying to provide reliable service to HWVP.

5.7.2.3 The Hanford SCADA network will be used by Hanford site operators to monitor and control the switchyard 230 KV loop and 13.8 KV distribution lines to the HWVP site. The Hanford SCADA network 230 KV - 13.8 KV switchyard interface controls will be located in the switchyard relay station/breaker house.

5.7.2.4 The two 13.8 kV lines from the switchyard to the HWVP switchgear will be electrically independent and physically separated, with each line being capable of supplying the total HWVP load. (TDP-Section 9, Item 200). Each line will be routed in separate conduits from the switchyard to the switchgear in the Switchgear/Generator Building. Where routed through manholes, the circuits will be separated by means of physical location and the use of barriers and fireproofing as required.

5.7.2.5 The switchyard will be arranged and connected as shown on Drawing No. H-2-122010.

5.7.3 NORMAL 13.8 KV POWER SYSTEM

5.7.3.1 The normal power distribution system (System 32) will originate at the load side of the 13.8 kV circuit breakers in the HWVP Switchyard. Circuits from the circuit breakers will be routed underground in conduit to the 13.8 kV Switchgear in the Switchgear/Generator Building.

5.7.3.2 The 13.8 kV Switchgear will be arranged and connected as shown on Drawing No. H-2-122011.

5.7.3.3 During normal operation, the bus tie breaker will be open and each bus will be served from its incoming line. In the event of the loss of one power source, that source's incoming breaker will open and the tie breaker will automatically close to re-energize the affected bus. Transfer back to normal operating conditions will be initiated manually.

5.7.3.4 The two incoming breakers and the tie breaker will be electrically interlocked to prevent having the main and tie breakers closed at the same time, with the exception that all three breakers may be closed momentarily during a manual switching operation.

5.7.3.5 From the 13.8 kV normal switchgear, power will be distributed to load centers as shown on Drawing No. H-2-122013.

5.7.4 STANDBY 13.8 KV POWER SYSTEM

5.7.4.1 The standby power system (System 33) consists of two gas turbine driven generators connected to two 13.8 kV Switchgear assemblies which will be arranged and connected as shown on Drawing No. H-2-122012, Sheets 1 and 2. (TDP-Section 9, Items 310 and 320)

5.7.4.2 During normal operation the gas turbine driven generators will not be running and one bus tie breaker will be open. Each 13.8 kV Switchgear bus will be served from the normal switchgear. In the event of the loss of one source to the standby system, that source's incoming breaker will open and the tie breaker will automatically close to re-energize the affected bus. Transfer back to normal operating conditions will be initiated manually.

5.7.4.3 The two incoming breakers and the normally open tie breaker will be electrically interlocked to prevent having the main and tie breakers closed at the same time, with the exception that all three breakers may be closed momentarily during a manual switching operation.

5.7.4.4 In the event of the loss of all normal power, the incoming breakers and normally open tie breaker will open and the two gas turbine generators will start. The gas turbine start signal will be delayed approximately three seconds to verify that the loss of both power sources is not momentary. As each generator comes up to rated speed its main breaker will close to energize its bus. In the event that one gas turbine does not start, its generator breaker will be locked out and the normally open tie breaker will close, providing power to both standby buses from the operating generator. Transfer back to the normal supply will be performed manually following restoration of normal power. A sequenced starting scheme will be incorporated to limit the starting KVA on the generators to a level within their capability.

5.7.4.5 The generators will be capable of being manually synchronized with each other and with the normal power source.

5.7.4.6 The standby system will be designed to permit periodic on-line load testing. (6430.1A-1660-2)

5.7.4.7 From the 13.8 kV Standby Switchgear, power will be distributed to load centers as shown on Drawing No. H-2-122012.

5.7.5 480 VOLT LOAD CENTERS

5.7.5.1 In general, power from the 13.8 kV normal and standby systems will be distributed to load centers located throughout the facility.

5.7.5.2 Each double-ended load center will consist of two 13,800-480 volt transformers connected to 480 volt switchgear as indicated on Drawing No. H-2-122013. The switchgear will be equipped with an automatic transfer scheme to provide a secondary selective system.

5.7.5.3 During normal operation the bus tie breaker will be open and each bus will be served from its transformer. In the event of the loss of one power source, that source's incoming breaker will open and the tie breaker will automatically close to re-energize the affected bus. Transfer back to normal operating conditions will be initiated manually.

5.7.5.4 The two incoming breakers and the tie breaker will be electrically interlocked to prevent having the main and tie breakers closed at the same time, with the exception that all three breakers may be closed momentarily during a manual switching operation.

5.7.5.5 From the load centers power will be distributed to motor control centers, large motors and other individual 480 volt loads.

5.8 EMERGENCY POWER SYSTEMS

5.8.1 UNINTERRUPTIBLE POWER SUPPLY (UPS) SYSTEM

5.8.1.1 A UPS System (System 34) will be provided to ensure continuity of power to critical (safety) plant loads which might otherwise malfunction due to momentary interruptions or fluctuations. (TDP-Section 9, Item 400)

5.8.1.2 Each UPS assembly will be an integrated system which will include a rectifier/charger, invertor, rechargeable battery, static transfer switch, manual bypass switch, and all necessary auxiliary control and monitoring devices. (TDP-Section 9, Items 400 and 440)

5.8.1.3 The UPS will convert the incoming ac source to a dc source for the invertor and the battery, and convert the dc to an ac output from the invertor.

5.8.1.4 The static transfer switch will operate to transfer the UPS load to an alternate source, without interruption of power to the load, under the following conditions:

a. A malfunction in the UPS invertor.

b. The load exceeds the UPS rating.

c. The UPS is to be shut down manually.

d. In the event that a fault occurs in a critical load branch circuit. In this case the static switch will operate momentarily, providing additional power from the alternate source. This additional power will assist in clearing the

branch circuit fault, allowing the remaining critical loads to continue undisturbed.

5.8.1.5 The manual bypass switch will be provided to permit isolation and maintenance of the static transfer switch.

5.8.2 DC SYSTEM

5.8.2.1 A dc system (System 35) will be provided to serve critical (safety) dc plant loads such as 13.8 kV Switchgear control, 480 volt load center control and selected emergency lighting. (TDP-Section 9, Item 420)

5.8.2.2 Each dc system will basically consist of a battery, battery charger and a distribution panel.

5.9 ELECTRICAL EQUIPMENT

5.9.1 230 KV TRANSMISSION LINES AND 230-13.8 KV SUBSTATION.

5.9.1.1 The 230 KV transmission line will consist of two dead end structures, steel transmission towers and approximately 4.2 mile of 230 KV transmission line.

5.9.1.2 The new 230 KV to 13.8 KV 200 East Area Substation will include a 230 KV switchyard with 230 KV gas circuit breakers and isolation switches, two 230 KV - 13.8 KV, 25/33/42 MVA, OA/FA/FOA, three phase, 60 hertz power transformers, two 13.8 KV vacuum breakers and a relay house. The relay house will contain the 230 KV and 13.8 KV systems monitoring, protection and control devices including the Hanford SCADA Network interface equipment.

5.9.2 13.8 KV SWITCHGEAR

5.9.2.1 The 13.8 kV Switchgear will consist of assemblies of free-standing, vertical, dead-front, steel structures containing power buses, a ground bus, drawout power circuit breakers, necessary auxiliary control devices, instrument transformers, relays, meters, and control and meter switches. The switchgear will be metal-clad suitable for indoor installation. (TDP-Section 9, Item 600)

5.9.2.2 The power bus will be completely isolated and insulated with flame retardant, non-hygroscopic insulation.

5.9.2.3 Circuit breakers will be drawout, vacuum type, electrically operated. (TDP-Section 9, Item 600)

5.9.2.4 Switchgear bus and breaker ratings will be (TBD September 1990).

5.9.2.5 Each switchgear bus section will have a minimum of one spare breaker, space for one future breaker, and floor space for an extra cubicle. (TDP-Section 9, Item 600)

5.9.3 LOAD CENTER TRANSFORMERS

5.9.3.1 Load center transformers will be three phase, with delta-connected primary and wye-connected secondary windings, and with four 2-1/2 percent full-capacity taps, two above and two below rated primary voltage. (TDP-Section 9, Item 620)

5.9.3.2 Transformers for installation indoors will be ventilated dry type (TDP-Section 9, Item 620) with insulation suitable for 150°C temperature rise. Transformers rated less than 750 kVA will be self-cooled and those rated 750 kVA and over will be provided with cooling fans.

5.9.3.3 Transformer impedance, based on the self-cooled rating of the transformer, will be standard unless required otherwise to limit short circuit current.

5.9.3.4 The neutral point of secondary windings will be solidly grounded.

5.9.3.5 Each load center transformer primary will be provided with an air interrupter switch. (TDP-Section 9, Item 600) The switch will have a stored-energy operating mechanism and will be fused or unfused as indicated on One-Line Diagram H-2-122013, Sheets 1 through 12.

5.9.4 480 VOLT LOAD CENTER SWITCHGEAR

5.9.4.1 The 480 volt switchgear will consist of assemblies of free-standing, vertical, dead-front, steel structures containing power buses, a ground bus, drawout power circuit breakers, necessary auxiliary control devices, instrument transformers, relays, meters, and control and meter switches. The switchgear will be metal-enclosed suitable for indoor installation.

5.9.4.2 The power bus will be isolated or insulated such that bare bus bars will not be exposed when a door is opened or a rear panel is removed.

5.9.4.3 Circuit breakers will be drawout, air break, electrically or manually operated as required, with stored-energy type operators.

5.9.4.4 Breakers will have solid-state trip units with selective characteristics to facilitate overload and short circuit protection and system coordination.

5.9.4.5 Each switchgear bus section will have a minimum of one spare breaker and one space. A transformer secondary breaker will be provided as an integral part of the load center.

5.9.4.6 From the 480 volt load centers power will be distributed to motor control centers, distribution panels, motors rated from 125 hp to 300 hp, and other large power users. (TDP-Section 9, Item 720)

5.9.5 480 VOLT MOTOR CONTROL CENTERS

5.9.5.1 Motor control centers will in general be in accordance with NEMA ICS (6430.1A-1640-2.5), metal-enclosed, free-standing, dead-front, with Type 1 enclosures and Type B, Class I wiring.

5.9.5.2 Starters for 460 volt, three-phase motors will be combination type consisting of an adjustable instantaneous trip circuit breaker (motor circuit protector), a magnetic contactor with overload relays in each phase, individual control power transformers and other necessary control devices.

5.9.5.3 Motor control centers will serve 460 volt motors in the range of 1/2 hp through 100 hp. (TDP-Section 9, Item 740)

5.9.5.4 Minimum starter size will be NEMA Size 1.

5.9.5.5 Starters will in general be suitable for full voltage across-the-line starting except for those cases where reduced voltage or adjustable speed control is required.

5.9.5.6 Feeder circuits will be protected by thermal-magnetic circuit breakers.

5.9.5.7 For outdoor use, such as at the cooling tower, the motor control center will be provided with a NEMA Type 3R non-walk-in enclosure. All other features and criteria will be as stated above.

5.9.5.8 Each motor control center will have a minimum of the following spare feeder circuit breakers and motor starters:

a. One spare circuit breaker for each four circuit breakers used.

b. One space for future circuit breaker for each six circuit breakers used.

c. One spare motor starter for each four motor starters used.

d. One space for future motor starter for each six motor starters used.

The ratings of the spare circuit breakers and motor starters on each motor control center will be in proportion to the quantity and rating of the active units.

5.9.6 STANDBY GENERATORS

(TBD September 1990)

Two 13.8 KV, three phase, sixty hertz, wye winding standby generators will supply power at 0.8 power factor to designated safety class and nonsafety class loads.

5.9.7 DISTRIBUTION TRANSFORMERS

5.9.7.1 Distribution transformers will be indoor, dry-type, with 480 volt delta-connected primaries. Secondaries will be 208Y/120 volt or 480Y/277 volt as required, three phase, with the neutral solidly grounded. Each transformer will have four 2-1/2 percent full capacity primary taps, two above and two below rated primary voltage.

5.9.7.2 The ratings of distribution transformers will be standardized at 15, 30 and 45 kVA.

5.9.7.3 Whenever possible, transformers will be located adjacent to their associated panelboards.

5.9.8 PANELBOARDS

5.9.8.1 Lighting and appliance panelboards will be in accordance with NEMA PB1 and NEC Article 384, dead-front, circuit breaker type, with a ground bus and a solid neutral bus. Circuit breakers will be bolt-in type with minimum trip rating of 20 amperes and interrupting rating suitable for the available short circuit current.

5.9.8.2 Panelboards will be suitable for 208Y/120 volt, three phase, four wire or 480Y/277 volt, three-phase, four-wire service, or for 125 volt dc service, as required.

5.9.8.3 Panelboards will be located throughout the facility to provide convenient operation and to minimize the length of cable runs.

5.9.9 UNINTERRUPTIBLE POWER SUPPLY (UPS) SYSTEM

5.9.9.1 The UPS System components, except for the battery, will be housed in a free-standing, sheet steel enclosure with hinged access doors, suitable for indoor installation.

5.9.9.2 The UPS battery will be capable of delivering full power for eight hours for safety Class 1 or 2 control loads and thirty minutes for other loads. Battery cells will be lead calcium, sealed type, mounted on battery racks. The battery will be installed in a battery room provided with ventilation to maintain specified temperature and a safe concentration of hydrogen.

5.9.9.3 Each UPS will be rated 480 volt, three phase, 60 Hz input; 208Y/120 volt, three phase, four wire, 60 Hz output.

5.9.10 STATION BATTERIES AND CHARGERS

5.9.10.1 Station batteries will be rated 125 volts dc and will be capable of delivering full power for eight hours. Battery cells will be lead calcium, sealed type, mounted on battery racks.

The battery will be installed in a battery room provided with ventilation to maintain specified temperature and a safe concentration of hydrogen.

5.9.10.2 Battery chargers will be regulated silicon-controlled rectifier type sized to recharge its associated battery in eight hours from no charge to full charge while carrying its specified normal continuous load. Input to the battery charger will be 208 volt, single phase, 60 Hz for charger sizes less than or equal to 25 amps dc, and 480 volt, three phase, 60 Hz for charges sizes greater than 25 amps dc.

5.10 MOTORS

5.10.1 Motors will be in accordance with NEMA MG-1, squirrel-cage induction type, with starting and running characteristics coordinated with the driven machine and the motor control equipment. (6430.1A-1640-2.4).

5.10.2 Motor horsepower and voltage ratings will conform to the following:

	Voltage/Phase	
Horsepower	Motor Nameplate	System
Below 1/2 hp	115/1	120/1
1/2 hp and over	460/3	480/3

5.10.3 Motor enclosures and insulation will be suitable for operating and environmental conditions defined in Section 5.4.6.

5.10.4 Disconnecting means capable of disconnecting motors and their related controllers from the supply circuit will be provided in accordance with Article 430, Part H of the NEC.

5.11 POWER FACTOR

System power factor as measured at the 13.8 kV normal switchgear bus will be 0.95 when power is being supplied by the normal power source. (TDP-Section 9, Item 140)

To achieve the 0.95 power factor, the following measures will be considered:

a. For continuous duty motors rated 20 hp and larger, capacitors will be installed and switched with the motor.

b. For continuous duty motors rated 5 hp and larger, the use of high efficiency motors will be considered.

c. Where utilization conditions permit, the use of variable speed controllers will be considered.

d. Installation of switched capacitors at the 13.8 kV level.

5.12 LIGHTING

5.12.1 EXTERIOR LIGHTING

5.12.1.1 Exterior lighting will be provided for the following areas:

a. Building Exteriors

b. Pedestrian Walkways

c. Roadways

d. Parking Areas

e. Security Fence

f. Substation

g. Cooling Tower

h. Gate House

i. Monument

j. Emergency Staging Area

k. Bus Access Area

l. Exhaust Stacks

m. Tanks

5.12.1.2 Exterior lighting will consist of the following systems:

a. Normal lighting will provide general illumination for building exteriors, parking areas, pedestrian traffic areas, exhaust stacks and tanks

b. Standby lighting will provide illumination for secured areas, e.g., fence, gate house, emergency staging area and selected building ingress/egress locations.

5.12.1.3 Building exterior lights will be operated at 277 volts from a 480/277 volt, three phase, four wire supply. Area lighting will be operated at 480 volts from a 480/277 volt, three phase, four wire supply.

5.12.1.4 High pressure sodium vapor (HID) lighting will be used for exterior lighting except at the gate house, which will utilize metal halide.

5.12.1.5 Illumination levels will comply with the following:

- IES Handbook (6430.1A-1650-1)
- 6430.1A-0283-7 for gate house

5.12.1.6 Exterior lighting system controls will be time clock and/or photocell (6430.1A-1650-1)

5.12.1.7 High intensity discharge (HID) lighting fixtures will have high power factor constant wattage ballasts integral with the fixture.

5.12.1.8 High intensity discharge lighting fixtures used for security lighting will be provided with instant restrike capability to ensure the maintenance of minimum protective lighting levels during HID lamp start-up and restrike periods (6430.1A-0283-7).

5.12.2 INTERIOR LIGHTING

5.12.2.1 Interior lighting will be provided in the following buildings:

a. Vitrification Building

b. Manipulator Repair Building

c. Canister Storage Building

d. Fan House

e. Sand Filter Building

f. Mech/Elect Building

g. Frit/Cold Chemical Building

h. Operations Control/Regulated Entrance Building

i. Switchgear/Generator Building

j. WHT Building

k. Operations Annex Building

5.12.2.2 Interior lighting will consist of the following systems:

a. Normal lighting

b. Essential lighting, which will supply approximately 40 percent of normal lighting level and will be backed up by the standby power system. The essential lighting system will provide illumination for access, egress and minimum control function areas. (TDP-Section 9, Item 500)

c. Emergency lighting will provide illumination for access, egress and primary control areas when both the normal and essential systems are inoperative. (TDP-Section 9, Item 500) This system will be supplied from the emergency dc system or by means of individual battery pack fixtures and will comply with NFPA 101, Life Safety Code. (6430.1A-1655-1)

5.12.2.3 Indoor lighting will be operated at 277 or 120 volts from a 480Y/277 volt, three-phase, four-wire supply, or a 208/120 volt, three phase, four-wire supply.

5.12.2.4 High efficiency fluorescent lighting will be used in offices and areas with relatively low ceilings, such as 8 feet. (TDP-Section 9, Item 500)

High intensity discharge (HID) lighting, such as metal halide or high pressure sodium vapor, will be used in high bay areas. HID will also be used for in-cell lighting where there are viewing windows. (TDP-Section 9, Item 500)

5.12.2.5 Illumination levels will comply with the following:

a. General Requirements

- IES Handbook (TDP-Section 9, Item 500 & 6430.1A-1655-1)
- 41 CFR 101-20.116-2 (6430.1A-1655-1)

b. Specific Requirements

- Canyon Area will be provided with illumination levels required for CCTV viewing. (TDP, Section 9, Item 505)

- Remote cells will be provided with an average of 100 fc maintained when viewed from operating gallery through shielding windows. (TDP, Section 9, Item 505)

- WTC will be provided with illumination levels required for CCTV viewing and direct viewing from operating gallery through shielding window. (TDP, Section 9, Item 505)

5.12.2.6 Lighting will be controlled by automatic and/or manual (local) switches for individual rooms and offices. Lighting in larger

areas will be controlled by means of circuit breakers in area lighting panels. (TDP-Section 9, Item 500) Dimmers and/or switching will be provided for lighting in operating galleries to enhance in-cell viewing. (TDP-Section 9, Item 505)

5.12.2.7 Fluorescent fixtures will be industrial type, suitable for use with T-8 or T-12 rapid start lamps. Ballasts will be high power factor type, Class P with automatic reset thermal protective devices. For applications with low average ambient noise level, ballasts will have a sound rating of "A."

5.12.2.8 High intensity discharge lighting fixtures will have high power factor constant wattage ballasts. Ballasts will be integral with the fixture, except for in-cell lighting with remote maintenance, where the ballasts will be separately mounted for maintenance access.

5.12.2.9 Lighting system, design for MC and CDC will incorporate features to provide for remote replacement and maintenance of light fixtures. (TDP, Section 9, Item 505)

Lighting system design for WTC will incorporate features to provide for remote replacement of light fixtures. (TDP, Section 9, Item 505)

5.13 CONVENIENCE RECEPTACLES

Convenience receptacles will be provided throughout the facility as required for specific services and for general maintenance.

Convenience receptacles will be general grade as defined in FS W-C-596, two-pole, three-wire, grounded type, rated 20 amperes at 120 volts ac. (6430.1A-1605-2.3)

Maximum spacing of receptacles along walls in corridors, galleries and service areas will be 50 feet. Office areas will have a minimum of one receptacle on each wall of 10 feet or more in length, with a maximum spacing of 25 feet. Offices will have a minimum of two receptacles.

A maximum of six duplex receptacles will be connected to one 20 ampere branch circuit. Circuit loading will be estimated at 180 watts per duplex outlet unless specific conditions dictate otherwise.

Receptacles located outdoors or in wet or damp locations will be furnished with ground fault circuit interrupters. (6430.1A-1605-2.3)

5.14 POWER RECEPTACLES

Power receptacles will be provided throughout the facility as required for specific services and for general maintenance.

Receptacles will be specification grade, 480 volt, three phase, three wire, four pole. Ampere rating will be based on equipment to be served, except that receptacles for maintenance service will be rated 60 amperes.

A maximum of two receptacles will be connected to a 100 ampere branch circuit.

The fourth pole of each receptacle will be connected to the facility grounding system through a separate ground wire.

5.15 CONTROL STATIONS AND SWITCHES

Control stations will be heavy duty, industrial grade.

Snap switches will be suitable for use at their rated voltage as follows:

a. Resistive and inductive loads, including electric discharge lamps, not exceeding the ampere rating of the switch.

b. Tungsten filament lamp loads not exceeding the ampere rating of the switch.

c. Motor loads not exceeding 80 percent of the ampere rating of the switch.

5.16 RACEWAY SYSTEMS

5.16.1 GENERAL RACEWAY REQUIREMENTS

Electrical wiring will be enclosed in adequately sized raceway systems. The maximum fill of any conduit or raceway will not exceed the limits established in the National Electrical Code, NFPA 70.

5.16.2 UNDERGROUND CONDUIT

5.16.2.1 Underground conduit will be nonmetallic, encased in concrete, with warning tape for identification under the ground surface and above the duct bank. (6430.1A-1630-2.2.3)

5.16.2.2 Minimum conduit size will be two inches. (6430.1A-1630-2.2.3)

5.16.2.3 A minimum of 25 percent spare conduits (but not less than two spare conduits) will be provided in each duct run. Each spare conduit will be provided with a nylon or plastic cord of 200 pound minimum breaking strength to facilitate future cable installation. Spare conduits will be plugged or capped to prevent contamination. (6430.1A-1630-2.2.3)

5.16.2.4 Underground duct banks will be installed such that the top of the duct bank will be 18 inches minimum below grade.

5.16.2.5 Underground duct banks will be sloped a minimum of 1/8 inch per foot to drain.

5.16.3 ABOVEGROUND CONDUIT AND RACEWAY

5.16.3.1 Aboveground conduit will be intermediate metal conduit (IMC). The minimum conduit size will be 1/2 inch for exposed conduit and 3/4 inch for conduit embedded in concrete or masonry. (6430.1A-1605-2.1.1)

5.16.3.2 Conduit subject to exposure to corrosive liquids, solutions or environment will be PVC coated or stainless steel as required.

5.16.4 CABLE TRAYS

Cable trays will be aluminum or hot-dipped galvanized steel, ladder type, with solid unventilated covers as required for mechanical protection of the cables. Cable trays utilized for routing instrumentation circuits will be provided with solid bottom.

5.16.5 FIRE STOPS

Fire stops will be provided where raceways penetrate fire-rated walls, floors or ceilings.

5.16.6 SEALING

Conduit and other raceway will be sealed when penetrating walls, floors or ceilings, as required by environmental conditions, e.g., when penetrating walls between two HVAC zones, or when passing from a hazardous to a non-hazardous location as defined in Articles 500 and 501 of NEC.

5.16.7 PENETRATIONS

Cell wall embeds will be designed by piping. Refer to section 9.0

5.17 SEPARATION OF CIRCUITS

Redundant circuits serving Safety Class equipment will be physically and electrically separated to preclude the failure of one circuit from affecting the operation of the second.

Power and signal wiring will be adequately separated to minimize the introduction of electrical noise in the signal circuits. Power wiring and communication and alarm systems wiring shall not share the same conduit (6430.1A-1670-1).

Minimum separation of power and signal wiring serving safety class equipment will be commensurate with the guidelines set forth in IEEE 379 AND IEEE 384.

5.18 WIRE AND CABLE

Conductors for interior electrical systems will be copper. (6430.1A-1605-2.2.1)

Conductors for power and lighting circuits will not be smaller than No. 12 AWG. Conductors for control circuits will not be smaller than No. 14 AWG. No. 10, 12 and 14 AWG conductors will be solid and No. 8 AWG conductors and larger will be stranded. (6430.1A-1605-2.2.1)

Insulation for 600 volt power and lighting cable will be type THW, XHHW or THWN. Insulation for 90°C cable will be type RHH, THW or THHN. (6430.1A-1605-2.2.1)

Bonding and grounding conductors will be ASTM B1 solid copper for No. 8 AWG and smaller and ASTM B8-81 Class B stranded copper for No. 6 AWG and larger. (6430.1A-1605-2.2.1) Bonding and grounding conductors will be bare or with type THW, XHHW or THWN insulation.

Power cable for 13.8 kV service will be stranded copper conductor, shielded, type MV, 15 kV insulation.

Conductors for the 230 kV overhead distribution line will be aluminum cable steel reinforced (ACSR).

In-cell wire and cable (TBD Detail Design).

5.19 GROUNDING

5.19.1 GROUNDING SYSTEM

A grounding system will be provided to:

a. Ensure safety to personnel and equipment in case of electrical equipment failure.

b. Provide connection to ground for transformers, generators and other power system neutrals.

c. Provide a low impedance path for ground fault currents to assure prompt and consistent action of relays and other protective devices.

d. Prevent fire and damage by reducing the possibility of static discharge in hazardous areas.

5.19.2 GROUNDING MATERIALS AND METHODS

The grounding system will conform to HPS-SDC-1.2, NFPA 70 and IEEE 80 and will consist of the following major interconnected elements: (6430.1A-1639-1 and -2).

a. The underground 10-inch ductile iron sanitary water line loop around HWVP. (TDP-Section 9, Item 520)

b. Two grounding wells.

c. A main ground grid consisting of 5/8 inch diameter galvanized steel cables interconnected at a spacing of approximately 40 feet. (TDP-Section 9, Item 520)

d. Each building ground grid will consist of a galvanized steel cable loop within the soil outside the building perimeter and copper cables within the building slab. (TDP-Section 9, Item 520)

e. Fences will have galvanized steel ground cables within the soil on either side of the fence and surrounding gate areas. (TDP- Section 9, Item 520) Permanent fence grounding will comply with ANSI C2. (6430.1A-1639-3)

f. Raceway systems will not be used as the ground path. Separate ground conductors will be provided. (6430.1A-1639-1)

5.20 LIGHTNING AND SURGE PROTECTION

A lightning and surge protection system will be installed to provide a discharge path to ground through lightning arresters to drain off high voltage surges caused by switching operations and lightning discharges. (TDP-Section 9, Item 520)

Lightning protection will be considered for buildings containing facilities for the use, processing and storage of radioactive materials and for buildings over 50 feet in height. A risk assessment using the guide in Appendix I of NFPA 78 will be made of these buildings to determine the risk of loss due to lightning. (6430.1A-1630-5)

Lightning protection will comply with NFPA 78. (6430.1A-1630-5)

Electric power and communication services to all buildings and facilities and to underground power cables, where connected by overhead power distribution lines, will have lightning and surge protection. (6430.1A-1630-5)

5.21 ELECTRIC HEAT TRACING

(TBD Detail Design)

5.22 CATHODIC PROTECTION

Specific subsurface metallic objects will be protected against natural galvanic action by the use of cathodic protection. (TDP-Section 9, Item 590)

5.23 COMMUNICATIONS (System 65)

5.23.1 GENERAL

5.23.1.1 The HWVP general plant telephone system (GPTS) will interface with the integrated voice data telecommunications system (IVDTS) being installed to serve the Hanford Site. Design of the system within HWVP will take advantage of features available through the IVDTS. (TDP-Section 9, Item 580)

5.23.1.2 The design of the plant communications system will provide the cabling and/or equipment for the telephone, public address, intercom, radio and in-cell air suit communications systems within the HWVP to the interface point in the communications equipment room. All communications systems physical interfaces will be located in the communications equipment room. Space will be provided in the equipment room for telephone exchange equipment, paging equipment, wire terminating frames, radio equipment, coaxial and fiber optic transmission equipment, and work space for six ECS operators (TDP-Section 9, Item 580).

5.23.1.3 Telephone closets will be placed strategically throughout the facility. (TDP-Section 9, Item 580)

5.23.2 TELEPHONE SYSTEM

5.23.2.1 Telephone requirements will be based on providing internal and external communications service to all office and operating areas within HWVP. (TDP-Section 9, Item 580)

5.23.2.2 The telephone system will provide tie-ins to the Hanford Site crash alarm and the Hanford Site 811 emergency telephone system. (TDP-Section 9, Item 580)

5.23.2.3 Acoustical booths, voice-activated head sets, loud ringers, and/or visual signaling will be provided in high noise areas. (TDP-Section 9, Item 580)

5.23.2.4 The telephone system design will include a telephone jack on two opposing walls of each office. (TDP-Section 9, Item 580)

5.23.2.5 The intercom system will be incorporated into the telephone system.

5.23.2.6 Inside cable plant design will provide 50 percent spare cable and will provide spare raceway for inaccessible and/or embedded areas. (TDP-Section 9, Item 580)

5.23.3 PUBLIC ADDRESS SYSTEM

5.23.3.1 Public address subsystems within HWVP will be accessed by the telephone system with a master override from the central control room (CCR) and the Emergency Control Station. The system will also be accessible from specified telephone sets. (TDP-Section 9, Item 580)

5.23.3.2 Public address system coverage is required for all areas accessible to personnel, both interior and exterior. (TDP-Section 9, Item 580)

5.23.4 IN-CELL AIR SUIT COMMUNICATIONS

5.23.4.1 A method of communicating with personnel wearing protective suits will be provided in all cells where hands-on maintenance will be performed. Communications will be provided between the cell, the airlock and the clean operating area. (TDP-Section 9, Item 580)

5.23.4.2 The system will be hard-wired, installed in conduit which penetrates the cell shield walls. (TDP-Section 9, Item 580)

5.23.4.3 The following locations will be provided with air suit communications:

- Melter Cell/Canister Decon Cell Transfer Tunnel
- Smear Test Exit Tunnel
- Catch Tank Area
- Contact Decon & Maint Cell
- Railroad Well
- Crane Maintenance Area

5.23.5 RADIO SYSTEM

5.23.5.1 A radio system will provide communication capability between areas within HWVP and between HWVP and the Hanford Site. (TDP-Section 8, Item 600)

5.23.5.2 The radio system will interface with the existing Hanford radio system, including the fire alarm system. (TDP-Section 8, Item 600)

5.23.5.3 Radios, including base stations and remote units, will be provided for maintenance and operations. (TDP-Section 8, Item 600)

5.23.6 AREA AND PLANT-WIDE ALARM SYSTEMS

5.23.6.1 The fire alarm and detection system is covered in Section 11.9. Signals to off-site will be transmitted by means of the radio system. (TDP- Section 9, Item 580)

5.23.6.2 Radiation and hazardous condition alarms will be annunciated by means of the Health Protection Computer System. Refer to Section 7, Item 7.4.9. (TDP-Section 9, Item 580)

5.23.6.3 The evacuation alarm will be annunciated through the public address system speakers. It will be possible to activate the evacuation alarm from the Central Control Room and from the Emergency Control Station. (TDP-Section 9, Item 580)

5.23.6.4 The take-cover alarm will be annunciated through the public address system speakers. It will be possible to activate the take-cover alarm from the Central Control Room and from the Emergency Control Station. (TDP-Section 9, Item 580)

5.23.6.5 The Hanford Site crash alarm will be annunciated through the general plant telephone system ringer. The crash alarm will be directed to selected plant telephones. (TDP-Section 9, Item 580)

Attachment A

MAXIMUM ALLOWABLE VOLTAGE DROP IN CABLES

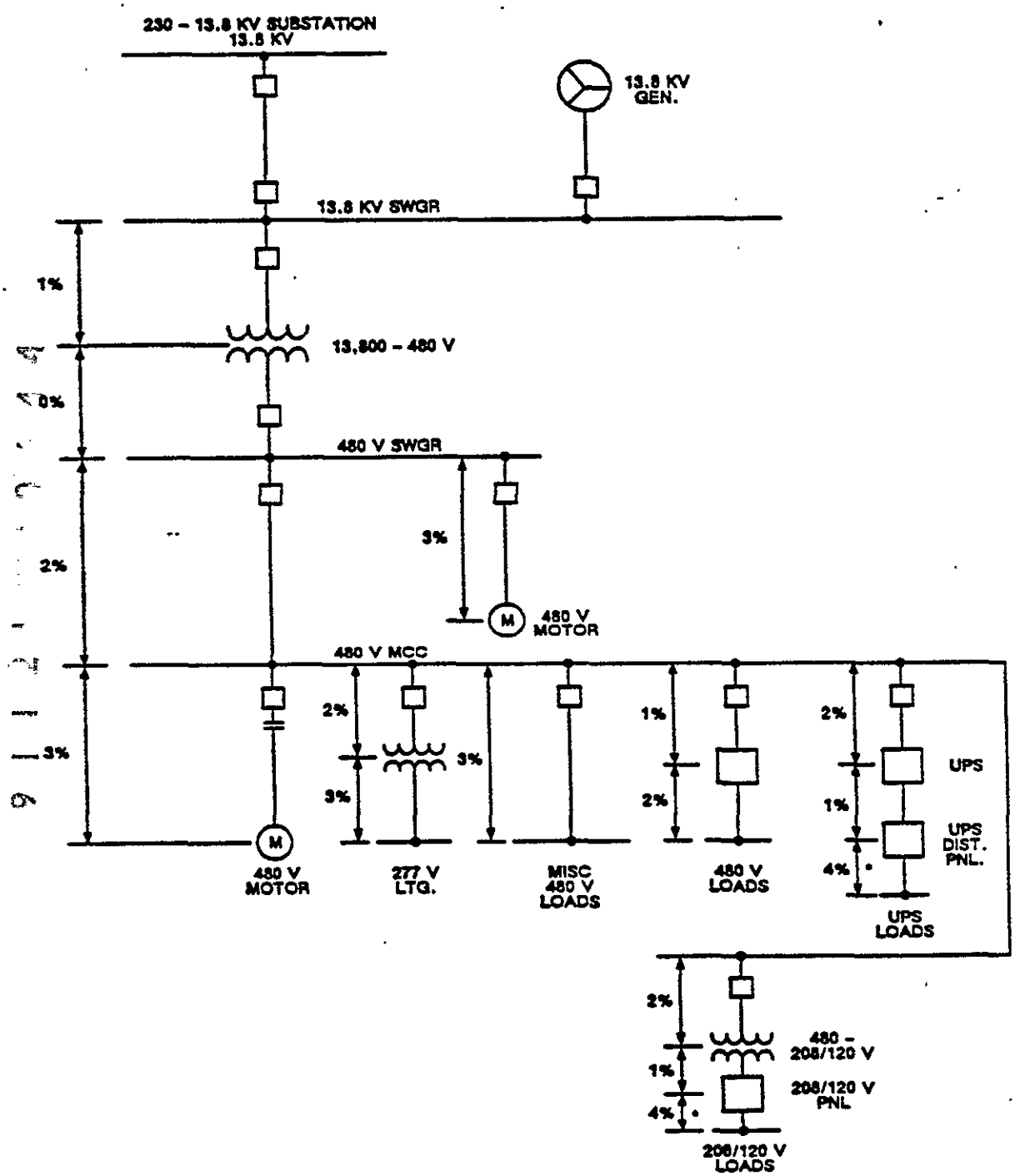

* – TO MOST REMOTE FIXTURE, OUTLET OR LOAD.

CONDUIT, CABLE TRAY & WIRE IDENTIFICATION

Attachment B, Sheet 1

POWER / CONTROL

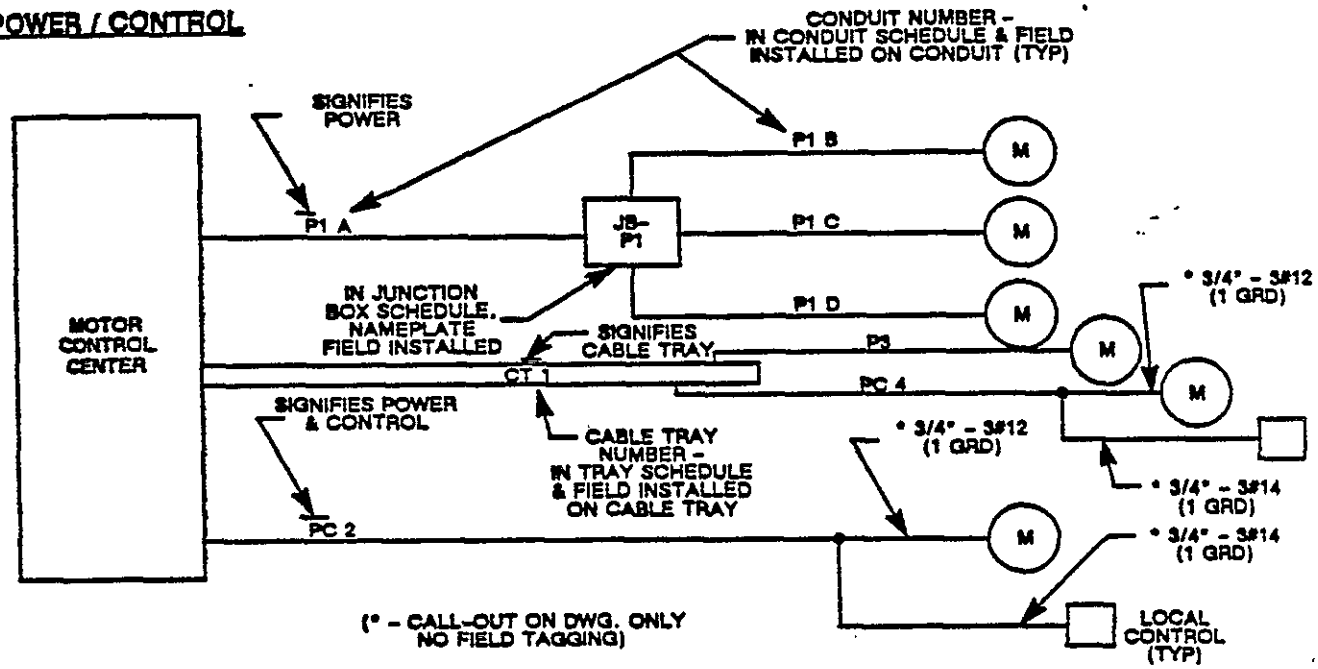

INSTRUMENTATION & COMMUNICATIONS

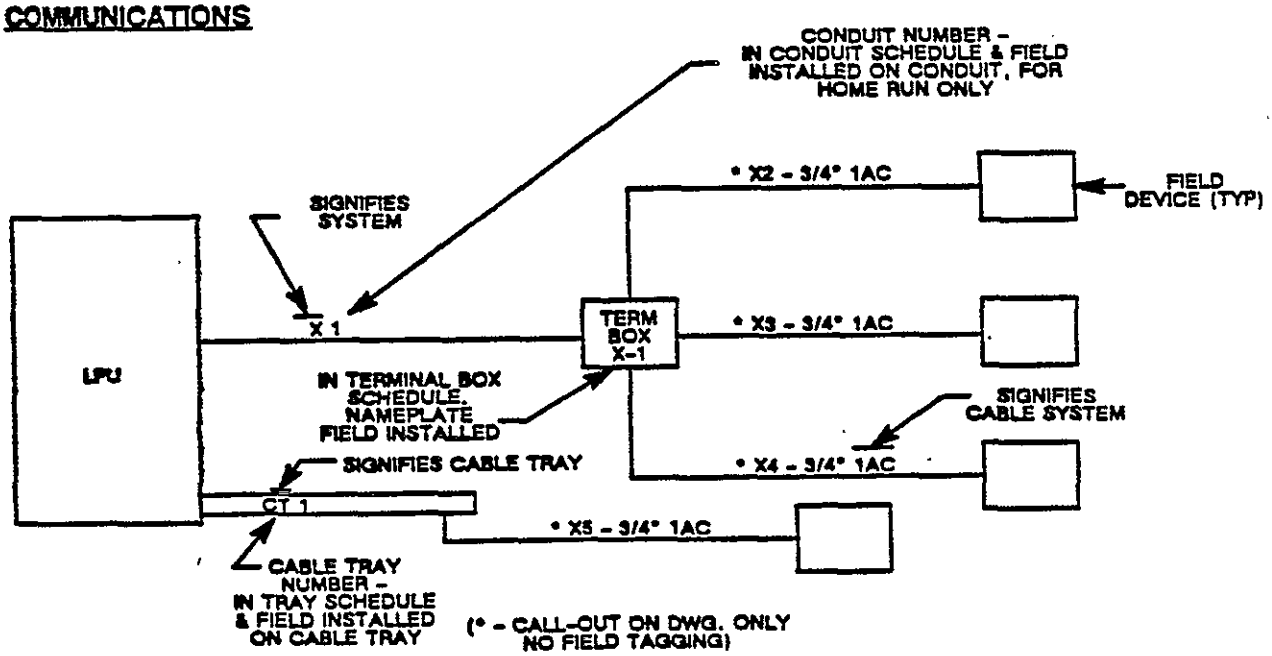

CONDUIT & WIRE IDENTIFICATION

Attachment B, Sheet 3

CONDUIT DESIGNATION

A - ALARM
C - CONTROL
F - FIRE ALARM
P - POWER
T - TELECOMMUNICATION

CABLE DESIGNATION

(TBD)

CONDUIT & WIRE IDENTIFICATION

Attachment B, Sheet 2

FIRE ALARM

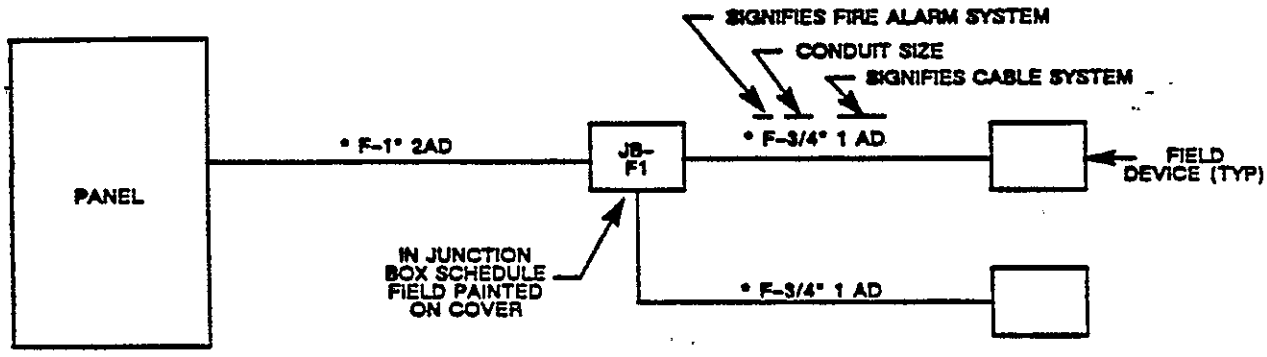

(* - CALL-OUT ON DWG. ONLY NO FIELD TAGGING)

LIGHTING & HEAT TRACING

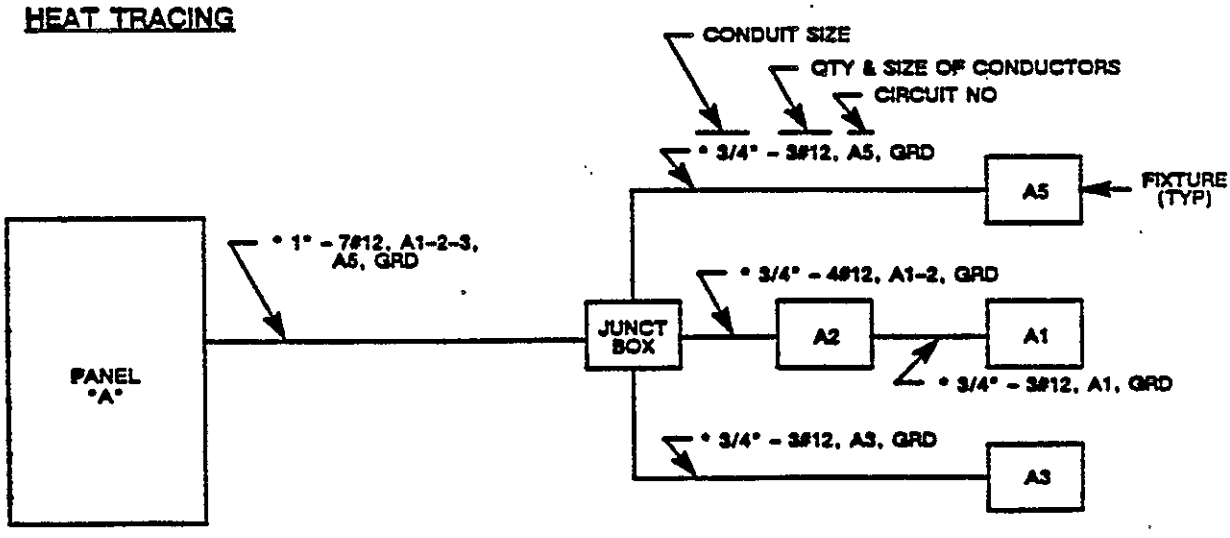

(* - CALL-OUT ON DWG. ONLY NO FIELD TAGGING)

ATTACHMENT "C"

ELECTRICAL SPECIFICATIONS
FOR
PRELIMINARY DESIGN

Section No.	Title
16100	Electrical Installation
16110	Electrical Materials and Devices
16122	13.8 kV Cable
16123	600 Volt Cable
16129	Grounding System
16320	13.8 kV to 480 Volt Transformers
16346	13.8 kV Switchgear
16426	480 Volt Switchgear
16460	Dry-Type and Isolation Transformers
16470	480 and 208/120 Volt Panelboards
16480	Motor Control
16510	Lighting Fixtures
16610	Uninterruptible Power Supply (UPS) Systems
16620	Packaged Gas Turbine Generator Systems
16630	Battery Power Systems
16740	Telephone System
16770	Public Address System
16905	Electrical Material and Equipment Testing

ATTACHMENT "D"

ELECTRICAL DRAWINGS
FOR
PRELIMINARY DESIGN

Drawing No.	Title
H-2-122008	Electrical One-Line Diagrams, Legend, Symbols and General Notes
H-2-122009, Sh.1-3	Electrical Overall System One-Line Diagram
H-2-122010	Electrical 230-13.8 kV Switchyard
H-2-122011, Sh.1-2	Electrical 13.8 kV Utility Power One-Line Diagram
H-2-122012, Sh.1 & 2	Electrical 13.8 kV Standby Power One-Line Diagram
H-2-122013, Sh.1-13	Electrical 480 Volt Load Center One-Line Diagram
H-2-122014	Electrical UPS System One-Line Diagram
H-2-122015	Electrical DC System One-Line Diagram
H-2-122900, Sh.1-5	Communications Systems, Block Diagram
H-2-122901, Sh.1-13	Communications Systems Layouts, Vitrification Bldg.
H-2-122902, Sh.1-2	Communications Systems Layouts, Canister Storage Bldg.
H-2-122903, Sh.1-2	Communications Systems Layouts, Oper. Cont./Reg. Entr. Bldg.
H-2-122904	Communications Systems Layouts, Mech./Elec. Services Bldg.
H-2-122905, Sh.1-2	Communications Systems Layouts, Frit Stor/Cold Chem. Bldg.
H-2-122906, Sh.1-2	Communications Systems Layouts, Switchgear/Generator Bldg.
H-2-122907, Sh.1-3	Communications Systems Layouts Fan House
H-2-122908	Communications Systems Layouts, WHT Building
H-2-122910, Sh.1-2	Communications Systems Layouts, Sand Filter Bldg.
H-2-122911, Sh.1-6	Communications Systems Layout, Manipulator Repair Bldg.
H-2-122912, Sh.1-2	Communications Systems Layout, Ship and Receiving Area
H-2-122913	Communications Systems Layout, Receiving and Storage Building

ATTACHMENT "E"

ELECTRICAL SPECIFICATIONS
FOR
DETAIL DESIGN

SECTION NO.	TITLE
16060	Demolition
16100	Electrical Installation
16105	Electrical Materials and Construction
16110	Electrical materials and Devices
16122	13.8 kV Cable
16123	600 Volt Cable
16124	600 Volt Control Cable
16125	Instrumentation Cable
16126	Thermocouple Cable
16127	Coaxial Cable
16128	Fiber Optic Cable
16129	Grounding System
16310	230 kV Switchyard
16320	13.8 kV to 480 Volt Transformers
16346	13.8 kV Switchgear
16370	230 kV OH Transmission Line
16426	480 Volt Switchgear
16460	Dry-Type and Isolation Transformers
16470	480 and 208/120 Volt Panelboards
16480	Motor Control
16510	Lighting Fixtures
16530	Site Lighting
16550	Roadway Lighting
16610	Uninterruptible Power Supply (UPS) Systems
16630	Battery Power Systems
16730	Supervisory Control and Data Acquisition (SCADA) System
16740	Telephone System
16760	Air Suit Communications
16770	Public Address System
16905	Electrical Material and Equipment Testing

THIS PAGE INTENTIONALLY
LEFT BLANK

SECTION 6.0

HEATING, VENTILATION, AND AIR CONDITIONING ENGINEERING AND DESIGN (SYSTEMS 3 AND 5)

TABLE OF CONTENTS

		PAGE
6.0	HEATING VENTILATING, AND AIR CONDITIONING (HVAC) ENGINEERING AND DESIGN	1
6.1	SCOPE	1
6.1.1	ENGINEERING AND DESIGN REQUIREMENTS	1
6.1.2	ACRONYMS AND ABBREVIATIONS	1
6.1.3	DEFINITIONS	1
6.1.4	HVAC DESIGN	2
6.1.5	HVAC DESIGN INTERFACE	3
6.2	CODES AND STANDARDS	3
6.2.1	TECHNICAL REQUIREMENTS BASELINE	3
6.2.2	GOVERNING REGULATIONS	3
6.3	GENERAL CONSIDERATIONS	5
6.3.1	SAFETY CLASSIFICATION	5
6.3.2	QUALITY ASSURANCE IMPACT LEVELS	5
6.3.3	CONTAMINATION CONFINEMENT	5
6.3.4	CONTROLS AND MONITORING	8
6.3.5	FILTRATION REQUIREMENTS	9
6.3.6	HUMAN FACTORS DESIGN	10
6.3.7	ACCESS AND WORKING SPACE	11
6.3.8	ENERGY CONSERVATION REQUIREMENTS	11
6.3.9	SPARE CAPACITY	11
6.4	HVAC DESIGN CONSIDERATIONS AND STANDARD PRACTICES	12
6.4.1	SITE DESIGN CONDITIONS	12
6.4.2	INSIDE DESIGN CONDITIONS	12
6.4.3	HVAC SYSTEMS IDENTIFICATION	21
6.4.4	HYDRONIC SYSTEMS IDENTIFICATION	22
6.4.5	EQUIPMENT SELECTION CRITERIA	22
6.4.6	AIR DISTRIBUTION SYSTEM DESIGN REQUIREMENTS	23
6.4.7	EXHAUST STACKS	25
6.4.8	TESTING, ADJUSTING AND BALANCING	25
6.4.9	FIRE PROTECTION REQUIREMENTS	26
6.4.10	PROCEDURES FOR CALCULATIONS	27
6.5	SPECIFICATIONS	27
6.6	DRAWINGS	28

6.7 VITRIFICATION BUILDING HVAC SYSTEMS (SYSTEMS 05A THROUGH 05G AND 05Z) 28
6.7.1 REFERENCE DRAWINGS 28
6.7.2 FUNCTIONAL DESIGN CRITERIA (FDC) DOCUMENT 32
6.7.3 TECHNICAL DATA PACKAGE (TDP) DOCUMENT 32
6.7.4 ASSUMPTIONS AND REFERENCES 32
6.7.5 SYSTEM DESCRIPTION 34
6.7.6 PROCESS CONSIDERATIONS 43
6.7.7 SAFETY REQUIREMENTS 44
6.7.8 RELIABILITY AND MAINTENANCE 44
6.7.9 ENVIRONMENTAL CONSIDERATIONS 44

6.8 CANISTER STORAGE BUILDING HVAC SYSTEM (SYSTEM 05I AND 05J) 45
6.8.1 REFERENCE DRAWINGS 45
6.8.2 FUNCTION DESIGN CRITERIA (FDC) DOCUMENT 46
6.8.3 TECHNICAL DATA PACKAGE (TDP) DOCUMENT 46
6.8.4 ASSUMPTIONS AND REFERENCES 46
6.8.5 SYSTEM DESCRIPTION 47
6.8.6 PROCESS CONSIDERATION 50
6.8.7 SAFETY REQUIREMENTS 50
6.8.8 RELIABILITY AND MAINTENANCE 51
6.8.9 ENVIRONMENTAL CONSIDERATIONS 51

6.9 OPERATIONS CONTROL/REGULATED ENTRANCE BUILDING HVAC SYSTEMS (SYSTEMS 05K, 05L, 05M, AND 52
6.9.1 REFERENCE DRAWINGS 52
6.9.2 FUNCTIONAL DESIGN CRITERIA (FDC) DOCUMENT 53
6.9.3 TECHNICAL DATA PACKAGE (TDP) DOCUMENT 53
6.9.4 ASSUMPTIONS AND REFERENCES 53
6.9.5 SYSTEM DESCRIPTION 54
6.9.6 PROCESS CONSIDERATION 56
6.9.7 SAFETY REQUIREMENTS 57
6.9.8 RELIABILITY AND MAINTENANCE 57
6.9.9 ENVIRONMENTAL CONSIDERATIONS 57

6.10 MANIPULATOR REPAIR BUILDING HVAC SYSTEMS (SYSTEMS 05P 58
6.10.1 REFERENCE DRAWINGS 58
6.10.2 FUNCTIONAL DESIGN CRITERIA (FDC) DOCUMENT 59
6.10.3 TECHNICAL DATA PACKAGE (TDP) DOCUMENT 59
6.10.4 ASSUMPTIONS AND REFERENCES 59
6.10.5 SYSTEM DESCRIPTION 60
6.10.6 PROCESS CONSIDERATIONS 62
6.10.7 SAFETY REQUIREMENTS 63
6.10.8 RELIABILITY AND MAINTENANCE 63
6.10.9 ENVIRONMENTAL CONSIDERATIONS 64

6.11 MECHANICAL/ELECTRICAL BUILDING HVAC SYSTEMS (SYSTEMS 05R AND 05S) 64
6.11.1 REFERENCE DRAWINGS 64
6.11.2 FUNCTIONAL DESIGN CRITERIA (FDC) DOCUMENT 65
6.11.3 TECHNICAL DATA PACKAGE (TDP) DOCUMENT 66
6.11.4 ASSUMPTIONS AND REFERENCES 66
6.11.5 SYSTEM DESCRIPTION 66
6.11.6 PROCESS CONSIDERATIONS 69

6.11.7 SAFETY REQUIREMENTS 69
6.11.8 RELIABILITY AND MAINTENANCE 70
6.11.9 ENVIRONMENTAL CONSIDERATIONS 70

6.12 FAN HOUSE HVAC SYSTEMS (SYSTEMS 05T AND 05U) 70
6.12.1 REFERENCE DRAWINGS 70
6.12.2 FUNCTIONAL DESIGN CRITERIA (FDC) DOCUMENT 71
6.12.3 TECHNICAL DATA PACKAGE (TDP) DOCUMENT 71
6.12.4 ASSUMPTIONS AND REFERENCES 72
6.12.5 SYSTEM DESCRIPTION 72
6.12.6 PROCESS CONSIDERATIONS 74
6.12.7 SAFETY REQUIREMENTS 75
6.12.8 RELIABILITY AND MAINTENANCE 75
6.12.9 ENVIRONMENTAL CONSIDERATIONS 76

6.13 WHT/MAINTENANCE BUILDING HVAC SYSTEMS (SYSTEMS 76
6.13.1 REFERENCE DRAWINGS 76
6.13.2 FUNCTIONAL DESIGN CRITERIA (FDC) DOCUMENT 77
6.13.3 TECHNICAL DATA PACKAGE (TDP) DOCUMENT 77
6.13.4 ASSUMPTIONS AND REFERENCES 77
6.13.5 SYSTEM DESCRIPTION 78
6.13.6 PROCESS CONSIDERATIONS 79
6.13.7 SAFETY REQUIREMENTS 80
6.13.8 RELIABILITY AND MAINTENANCE 80
6.13.9 ENVIRONMENTAL CONSIDERATIONS 81

6.14 SWITCHGEAR/GENERATOR BUILDING HVAC SYSTEMS (SYSTEMS 05X 81
6.14.1 REFERENCE DRAWINGS 81
6.14.2 FUNCTIONAL DESIGN CRITERIA (FDC) DOCUMENT 82
6.14.3 TECHNICAL DATA PACKAGE (TDP) DOCUMENT 82
6.14.4 ASSUMPTIONS AND REFERENCES 83
6.14.5 SYSTEM DESCRIPTION 83
6.14.6 PROCESS CONSIDERATIONS 85
6.14.7 SAFETY REQUIREMENTS 86
6.14.8 RELIABILITY AND MAINTENANCE 86
6.14.9 ENVIRONMENTAL CONSIDERATIONS 87

6.15 CENTRAL CHILLED WATER SYSTEM (SYSTEM 03A) 87
6.15.1 REFERENCE DRAWINGS 87
6.15.2 FUNCTIONAL DESIGN CRITERIA (FDC) DOCUMENT 88
6.15.3 TECHNICAL DATA PACKAGE (TDP) DOCUMENT 88
6.15.4 ASSUMPTIONS AND REFERENCES 88
6.15.5 SYSTEM DESCRIPTION 89
6.15.6 PROCESS CONSIDERATIONS 90
6.15.7 SAFETY REQUIREMENTS 91
6.15.8 RELIABILITY AND MAINTENANCE 91
6.15.9 ENVIRONMENTAL CONSIDERATIONS 91

6.16 OCB CHILLED WATER SYSTEM (SYSTEM 03B) 92
6.16.1 REFERENCE DRAWINGS 92
6.16.2 FUNCTIONAL DESIGN CRITERIA (FDC) DOCUMENT 92
6.16.3 TECHNICAL DATA PACKAGE (TDP) DOCUMENT 92
6.16.4 ASSUMPTIONS AND REFERENCES 92

6.16.5 SYSTEM DESCRIPTION 93
6.16.6 PROCESS CONSIDERATIONS 95
6.16.7 SAFETY REQUIREMENTS 95
6.16.8 RELIABILITY AND MAINTENANCE 95
6.16.9 ENVIRONMENTAL CONSIDERATIONS 96

6.17 HEAT RECOVERY SYSTEM (SYSTEM 03C) 96
6.17.1 REFERENCE DRAWINGS 96
6.17.2 FUNCTIONAL DESIGN CRITERIA (FDC) DOCUMENT 97
6.17.3 TECHNICAL DATA PACKAGE (TDP) DOCUMENT 97
6.17.4 ASSUMPTIONS AND REFERENCES 97
6.17.5 SYSTEM DESCRIPTION 98
6.17.6 PROCESS CONSIDERATIONS 99
6.17.7 SAFETY REQUIREMENTS 100
6.17.8 RELIABILITY AND MAINTENANCE 100
6.17.9 ENVIRONMENTAL CONSIDERATIONS 101
HVAC SPECIFICATIONS FOR PRELIMINARY DESIGN 102

LIST OF TABLES

TABLE	TITLE	PAGE
6-1	Ventilation Zones	7
6.7.5.4-1	Vitrification Building HVAC Components	38
6.8.5.4-1	Canister Storage Building HVAC Components	46
6.9.5.4-1	OCB HVAC Components	53
6.10.5.4-1	Manipulator Repair Building HVAC Components	59
6.11.5.4-1	Mechanical/Electrical Building HVAC Components	65
6.12.5.4-1	Fan House Building HVAC Components	70
6.13.5.4-1	WHT/Vault Maintenance Building HVAC Components	75
6.14.5.4-1	Switchgear/Generator Building HVAC Components	80
6.15.5.4-1	Central Chilled Water System Components	85
6.16.5.4-1	OCB Chilled Water System Components	90
6.17.5.4-1	Heat Recovery System Components	94

THIS PAGE INTENTIONALLY
LEFT BLANK

6.0 HEATING VENTILATING, AND AIR CONDITIONING (HVAC) ENGINEERING AND DESIGN

6.1 SCOPE

6.1.1 ENGINEERING AND DESIGN REQUIREMENTS

This document provides the basis for HVAC System design for the Hanford Waste Vitrification Plant, located within the 200 East Area at the DOE Hanford Site, Richland, Washington.

6.1.2 ACRONYMS AND ABBREVIATIONS

See Section 2.2.

6.1.3 DEFINITIONS

Confinement System	- The barrier and its associated system (including ventilation and pressure zones) between areas containing hazardous materials and the environment or other areas in the facility that are normally expected to have levels of hazardous materials lower than allowable concentration limits.
Contamination	- The presence of radioactive, toxic or noxious material that is considered harmful to man and his environment
Design Basis Accident	- Postulated accidents, or natural forces and resulting conditions for which the confinement structure, systems, components and equipment must meet their functional goals.
Fail-Safe	- A design characteristic by which a unit or system will become safe and remain safe if a system or component fails or loses its activation energy.
Filter	- A device which physically removes particulate matter from a fluid or gas by the mechanism of impaction, settling, screening, inertia, diffusion or any combination of these mechanisms.
Final Filter	- The last filter in a set of filters arranged in series.
Hardened	- Structures designed and constructed to withstand the effects of a DBA without failure.

HEPA Filter	- A high-efficiency particulate air filter having fibrous media that produces a particle removal efficiency of at least 99.97% for 0.3 micrometer particles of dioctyl phthalate (DOP) when tested in accordance with MIL-STD-282.
Particulate	- A minute piece of solid matter having measurable dimensions which can be conveyed by moving air currents.
Prefilter	- A filter of lesser efficiency installed ahead of a higher efficiency filter (usually a HEPA filter) to protect it from high dust loading coarse particulates, or both.
Redundant Capacity	- Duplicate equipment maintained in a standby or ready-to-run condition to ensure operational availability of critical components of the ventilation systems with required reliability.
Safety Related	- Term used to designate those plant systems or components that are subject to the quality assurance requirement of ANSI/ASME NQA-1.
Shall	- Indicates a requirement that is to be met.
Should	- Indicates a strong recommendation for implementation.
Will	- Expresses a declaration of purpose or simple futurity.

6.1.4 HVAC DESIGN

6.1.4.1 The HVAC design will include all applicable elements as defined in this document for the following buildings and facilities:

a) Vitrification Building;

b) Manipulator Repair Building;

c) Canister Storage Building;

d) Fan House Building;

e) Sand Filter Building;

f) Mechanical/Electrical Building;

g) Operations Control Building;

h) Regulated Entrance Facility;

i) Generator/Switchgear Building;

j) WHT Vault/Maintenance Building;

6.1.5 HVAC DESIGN INTERFACE

6.1.5.1 The HVAC System design will interface with the following systems:

a)	Fire Detection and Alarms	- Fire Protection and Control Systems
b)	Instrumentation and Instrument Wiring	- Control Systems
c)	HVAC Equipment Power Supply	- Electrical
d)	Hydronics Piping	- Piping
e)	Contamination Confinement	- Architectural/Structural
f)	Utility Services	- Utilities

6.2 CODES AND STANDARDS

6.2.1 TECHNICAL REQUIREMENTS BASELINE

This design guide is based on the following:

a)	SD-HWV-FDC-001	Hanford Waste Vitrification Plant Functional Design Criteria, Rev. 3
b)	SD-HWV-DP-001	Hanford Waste Vitrification Plant Technical Data Package, Rev. 4
c)	SDC-5.1	Hanford Plant Standard, Standard Design Criteria for Heating, Ventilating, and Air Conditioning, Rev. 6

6.2.2 GOVERNING REGULATIONS

The following codes and standards will govern the HVAC design of this project. The latest edition in effect on June 1, 1989, will be used unless specific editions and/or revisions are indicated as applicable:

6.2.2.1 Federal and State Laws

a) DOE Order 6430.1A General Design Criteria (Dated 4-4-89).

b) DOE/EP-0108 "Standard for Fire Protection of DOE Electronic Computer/Data Processing Systems."

c) DOE/EV/1830-T5 "Guide to Reduction Radiation Exposure to ALARA."

6.2.2.2 ACGIH Industrial Ventilation Manual.

6.2.2.3 Air Movement and Control Association (AMCA).

a) Publication 99, Standards Handbook.

b) Publication 201, Fans and Systems.

6.2.2.4 American Society of Heating, Refrigerating and Air-Conditioning Engineers (ASHRAE).

a)	ASHRAE 15 - 1978	Safety Code for Mechanical Refrigeration
b)	ASHRAE 55 - 1981	Thermal Environmental Conditions for Human Occupancy
c)	ASHRAE 62 - 1981	Ventilation for Acceptable Indoor Air Quality
d)	ASHRAE 90A - 1980	Energy Conservation in New Building Design

6.2.2.5 American National Standards Institute (ANSI)

a)	ANSI N290-1979	Design Construction and Operation of Ventilation Systems for Mixed Oxide (U02-PU02) Fuel Fabrication Plants
b)	ANSI/ASME N509 - 1980	Nuclear Power Plant Air Cleaning Units and Components
c)	ANSI/ASME N510 -1980	Testing of Nuclear Air Cleaning Systems

6.2.2.6 Factory Mutual - Loss Prevention Data Sheet 1-45 "Air Conditioning Ventilation Systems."

6.2.2.7 International Conference of Building Officials.

a) Uniform Building Code (UBC) 1988 Edition

b) Uniform Mechanical Code (UMC) 1988 Edition

6.2.2.8 National Fire Protection Association (1988 Edition).

a)	NFPA 90A	Air Conditioning and Ventilation Systems

b) NFPA 91 — Blower and Exhaust Systems

c) NFPA 45 — Fire Protection for Laboratories Using Chemicals

6.2.2.9 Nuclear Air Cleaning Handbook - ERDA 76-21.

6.2.2.10 Sheet Metal and Air Conditioning Contractors National Association (SMACNA).

a) Low Pressure Duct Construction Standards

b) High Pressure Duct Construction Standards

c) Round Industrial Duct Construction Standards

d) Rectangular Industrial Duct Construction Standards

e) HVAC Duct Design Manual

6.2.2.11 U.S. Nuclear Regulatory Commission (NRC) Reg. Guide 3.12 General Design Guide for Ventilation Systems of Plutonium and Fuel Fabrication Plants.

6.3 GENERAL CONSIDERATIONS

6.3.1 SAFETY CLASSIFICATION

Portions of the Vitrification Building Zone I System required to prevent off-site contamination must be Safety Class 1. Portions of HVAC the Vitrification Building, WHT, and Canister Storage Building must be Safety Class 2 where required to avoid on-site contamination.

Further information is contained in Section 2.5, and see pp. 6-41, 47, 54, 61, 66, 71, 72, 76, 82, 86 and 91.

6.3.1.1 Design Basis Power Failure

Safety Class 1 HVAC systems will be supplied with standby electrical power to ensure system reliability in the event of loss of normal power (HWV-FDC-001, Section 4.2 and HPS-SDC-5.1, Section I).

6.3.2 QUALITY ASSURANCE IMPACT LEVELS

Further information is contained in Section 2.5.3.

6.3.3 CONTAMINATION CONFINEMENT

6.3.3.1 The ventilation system will provide contamination confinement and function with the process enclosures to ensure contamination control. Confinement will be achieved by ventilation control

(differential pressure), by directing air from uncontaminated areas toward areas of higher contamination, by high efficiency particulate air (HEPA) or equivalent filtration or equivalent backflow isolation, and by the use of controlled personnel traffic patterns. The cross-contamination of process cells by airflow will be minimized. A combination of parallel and series ventilation systems should be used to provide protection for personnel and control of contamination at minimum investment and operation costs. (HWV-FDC-001 Section 1.3.5.3 and 4.2; SD-HWP-DP-001 Section 7; Item 100.)

6.3.3.2 The building will be divided into zones for ventilation and contamination control. The building will have a layout that physically separates the processing areas with high contamination potential from personnel areas with lesser contamination potential.

Four primary zones will be established. Sub-zone designations (e.g., 1A, 1B, 1C) may be used to distinguish areas within a particular zone with differing potentials for contamination. Zones are classified with respect to function as follows:

a) Zone I. The interior of a hot cell, glove box, canyon, open-face hood or other containment where radioactive material is exposed to the air.

b) Zone II. Areas providing access to Zone I. It may be a glove box operating area, a hot fume hood operating area, a hot cell service or maintenance area, or another building space where radioactive contamination could be present because of an unplanned release from operations in Zone I.

c) Zone III. General chemical laboratory areas or a maintenance and other general working areas usually free of radioactive materials but which may be subject to unplanned low levels of airborne radioactive materials.

d) Zone IV. Offices, clean shop areas, lunch rooms or any areas where radioactive contamination is prohibited, except in an approved container. (SD-HWP-DP-001, Section 7, Item 100)

6.3.3.3 The primary confinement will be provided by the process vessel enclosures and their ventilation systems.

6.3.3.4 The secondary confinement will be provided by the barriers that enclose areas that house the primary confinement and the systems that ventilate those areas. These areas may be referred to as operating areas or compartments. (DOE 6430.1A, Section 1300-7.2)

6.3.3.5 The tertiary or final confinement system is the building structure and its ventilation systems. The secondary and tertiary barriers may exist in common, such as a single structural envelope, provided the barrier can withstand the effects of man-made events and DBAs, including the DBE, and does not contain access ways that permit the

routine transfer of personnel, equipment, or materials directly from the exterior of the facility. (DOE 6430.1A, Section 1300-7.2)

6.3.3.6 Ventilation exhaust and air cleanup systems associated with primary confinement will not be shared with the secondary and tertiary confinement systems (DOE 6430.1A, Section 1550-99.0.2).

6.3.3.7 The Uncontrolled Access Zone ventilation system will filter, condition, and control the zone environment. Design consideration will be given to using recycled air or economy cycles. Exhaust air will not be used to dilute Process, Control, and Operating Zone exhaust to meet emission standards.

6.3.3.8 Ventilation systems will be designed to provide continuous airflow pattern from the environment into the building and then from noncontaminated areas of the building to potentially contaminated areas and then from potentially contaminated areas to normally contaminated areas. Thus, the airflow is from areas of lower radioactive contamination toward areas of higher radioactive contamination. (DOE 6430.1A, Section 1550-99.0.1)

6.3.3.9 Definition of the ventilation zones will be as specified in Table 1. The differential pressures specified will be with respect to atmosphere and will be considered minimum. Airlocks and other barriers will be provided, as required, to separate zones to ensure ventilation balance and contamination control and to maintain pressure differentials. (HWV-FDC-001, Section 4.2.1, 4.2.2)

6.3.3.10 Air recirculation from a zone of higher contamination back to a zone of lesser contamination is prohibited. If air is cascaded from one zone to another zone with a higher potential for contamination, backflow protection between the zones will be provided. Backflow protection between zones will be HEPA filters or an equivalent backflow isolation device. Backflow protection in supply air systems will be sufficient to prevent airborne releases to the environment. (HWV-FDC-001, Section 4.2.1; SD-HWP-DP-001 Section 7, Item 100)

Table 6-1. Ventilation Zones

Zone	Minimum DP (in. WG)	Description of Typical Areas
I. Process Zone	-1.0	High and potentially high contamination areas.
II. Control Zone	-0.5	Areas providing access or penetrations to Zone I. Not normally contaminated areas with moderate contamination potential. May be normally or frequently occupied areas.
III. Operating Zone	-0.25	Not normally contaminated areas with low contamination potential. Normally or frequently occupied areas.
IV. Uncontrolled Access Zone	Atmosphere +0.125	Clean areas. Areas where contamination is unacceptable.

6.3.4 CONTROLS AND MONITORING

6.3.4.1 A Distributed Control System (DCS) will be provided to monitor and control the HVAC. The DCS will have a data acquisition mode to retain a documented history of the operations. This information will be sufficient to support product qualification requirements. This system will involve both automatic and manual data input and control functions to provide a single operating and process control data base. (HWV-FDC-001, Section 2.2.5)

6.3.4.2 The ventilation system serving the facilities handling radioactive materials and/or hazardous materials and other critical areas will be under control at all times, either manually or automatically.

6.3.4.3 The control system for safety class ventilation systems will be Safety Class 1 and will be designed so that the failure of any single component or the loss of DCS function does not significantly degrade the confinement function of the ventilation system. Emergency control of Zone I exhaust fans will be ensured by hard wiring necessary control and instrumentation functions.

6.3.4.4 All controls will be designed to assume a safe position or mode in case of failure. The safe position will be identified in the process control description (PCD) of each system.

6.3.4.5 The control system will be designed to ensure that necessary exhaust fans are functioning correctly before any supply fans for the affected building or area are started so that correct zone pressures and confinement are maintained.

6.3.4.6 All exhaust ducts and stacks that may contain radioactive airborne effluents will be provided with two monitoring systems which will include appropriate backup capacity. One monitoring system will be of the continuous air monitor type and the other monitoring system will be a fixed sampler. (DOE 6430.1A, Section 1589-99.0.1)

6.3.4.7 Each exhaust stack effluent is continuously monitored to ensure that the exhaust air discharged into the atmosphere complies with the Effluent Control Guidelines established in the Project Design Guide Environmental Compliance Items Checklist and DOE 6430.1A, Section 130-1.4.

6.3.4.8 Filtration systems will have installed test and measuring devices and will facilitate monitoring operations, maintenance, and periodic inspection and testing during equipment operation or shutdown, as appropriate. Minimum instrumentation for filtration systems will be in accordance with Table 4-1, ANSI N509 (DOE 6430.1A, Section 1550-99.0.2)

6.3.4.9 All supply, return, relief, and exhaust air ventilation systems will have interlocked controls that interface with fire and smoke detection system controls and either turn off or selectively operate fans and dampers to prevent the spread of smoke and fire throughout the building. These controls will comply with NFPA 90A (DOE 6430.1A Section 1595-6.5)

6.3.5 FILTRATION REQUIREMENTS

6.3.5.1 HEPA filtration or equivalent filtration systems will be used for areas handling carcinogenic, radioactive or highly toxic materials to minimize the exposure to personnel or the environment.

Exhaust ventilation systems will be provided with HEPA filtration to minimize the release of hazardous materials through the exhaust path (DOE 6430.1A, Section 1550-2.5.5).

6.3.5.2 The number of exhaust filtration stages will be sufficient to limit concentrations of airborne radioactive particulates released to the environment to less than the applicable limits at the point of discharge during all anticipated operating conditions. The adequacy of the filtration system will be confirmed by safety analysis to ensure that airborne radioactive particulate concentrations are ALARA and do not exceed DOE Order 5480.1A requirements during abnormal, accident, and DBA conditions. Exhaust air treatment systems will contain a minimum of one stage of HEPA or equivalent efficiency filtration, as required by safety analysis. A HEPA or equivalent efficiency filter will have a minimum start-up efficiency of 99.95% as evaluated by test in accordance with ANSI-N510. HEPA filters will have a clean resistance pressure drop not to exceed 1 inch WG The velocity of the air entering the filter should not exceed 250 fpm. HEPA filters will be constructed and acceptance-tested in accordance with HPS-157-M through HPS-163-M, as

appropriate. Radiation monitoring of exhaust filters will be provided. (HWV-FDC-001, Section 4.2.2.2.)

6.3.5.3 Filtration systems associated with primary confinement system will not be shared with filtration systems associated with secondary and tertiary confinement systems (DOE 6430.1A, Section 1550-99.0.2).

6.3.5.4 HEPA filters will be installed at the interface between the gloveboxes and fume hoods (in which radioactive materials are handled) and the exhaust ventilation system to minimize the contamination of exhaust ductwork (DOE 6430.1A, Section 1550-99.0.2).

6.3.5.5 A HEPA filtered-air exhaust system will be installed for a change room if dispersible radionuclides are handled in the process area (DOE 6430.1A, Section 1300-6.8).

6.3.5.6 Air filtration units will be designed and located with appropriate radiation protection to maintain occupational doses ALARA during operations and maintenance and will be designed so that a bank of filters can be completely isolated from the ventilation system during filter element replacement. Filters will be positioned in ventilation systems in locations that minimize contamination of ductwork (DOE 6430.1A, Sections 1300-11.2, 1550-99.0.2).

6.3.5.7 The facility design will allow for routine in-place testing of HEPA filtration systems as outlined in ASME N510 (DOE 6430.1A, Section 1300-3.6).

6.3.5.8 HEPA filtration systems will be designed with prefilters installed upstream of HEPA filters to extend the HEPA filters life. Prefilters may be eliminated if analyses of filtration requirements and consideration of the filter assembly justifies omission (DOE 6430.1A, Section 1550-2.5.5).

6.3.5.9 Supply air inlets will be provided with filters rated at a minimum of 85% efficiency (atmospheric dust spot) in accordance with ASHRAE 52-76, and will be located above-grade to minimize dust loading to the filters.

6.3.5.10 Filter frames will be provided in supply air intakes in order to facilitate manual installation of additional filters during design basis ashfall except for the vitrification building. These frames will be equipped with instrument taps available for installation of pressure differential monitoring equipment. Filters for these frames should be rated at a minimum of 85% efficiency (atmospheric dust spot) in accordance with ASHRAE 52-76.

6.3.6 HUMAN FACTORS DESIGN

6.3.6.1 An effective climate control system will be provided to maintain temperature and humidity at an acceptable level between the humans and the environment. Temperature and humidity tolerance limits for recommended comfort zones are provided in NUREG 0700, Section 6.1

and UCRL 25673, Section 3.2.4.5 (DOE 6430.1A, Section 1300-12-4.3), and HPS-SDC-5.1.

6.3.6.2 Ventilation exhaust will meet the requirements of DOE Order 6430.1A, Section 1550-1.5.

6.3.6.3 The design of the control systems will take full advantage of the techniques of control display integration including various component grouping techniques, system mimics, system demarcation, and hierarchical labeling (DOE 6430.1A, Section 1300-12.4.7).

6.3.6.4 Each control device will provide the appropriate control capability, range, and sensitivity for necessary control setting and manipulations. Control operating characteristics will conform with operator expectations. Control components will be durable, comparable with nontypical apparel where required, and not prone to accidental activation (DOE 6430.1A, Section 1300-12.4.7).

6.3.6.5 The design of equipment will incorporate the objective of efficient maintainability. The surveillance, testing, and maintenance of a system and its restoration to operational effectiveness will be achieved at minimum costs with a minimum level of support services (DOE 6430.1A Section 1300-12.4.10).

6.3.7 ACCESS AND WORKING SPACE

Sufficient access to and working space about HVAC equipment will be provided to permit ready and safe operation and maintenance of such equipment. Access and working space will be in accordance with supplier and International Conference of Building Officials Code requirements.

6.3.8 ENERGY CONSERVATION REQUIREMENTS

6.3.8.1 The HVAC systems will be designed to meet the energy conservation requirements of ASHRAE Standard 90A and DOE 6430.1A, Section 0110-12. An analysis of each building to determine energy conservation features and energy conservation alternatives will be included in the Project Energy Conservation Report as required by DOE 6430.1A, Section 0110-12.8.

6.3.8.2 The HVAC system design will incorporate energy conservation alternatives based on Life Cycle Cost. However, any such features will not compromise health and safety of personnel and public in achieving energy efficiency.

6.3.9 SPARE CAPACITY

Sufficient redundancy and/or spare capacity will be provided, as necessary, to ensure adequate ventilation during normal operations and during and after DBA conditions. (HWV-FDC-001, Section 4.2).

6.4 HVAC DESIGN CONSIDERATIONS AND STANDARD PRACTICES

6.4.1 SITE DESIGN CONDITIONS

The HVAC calculations will be based upon the following design parameters (HPS-SDC-5.1):

6.4.1.1 Geographical

a) Altitude - 714 ft.

b) Latitude - 46°N

c) Longitude - 119°W

6.4.1.2 Outdoor Design Parameters

a) Air Temperature

1. For industrial areas and nonpersonnel comfort areas

   Winter: 9°F, Summer: 101°F DB, 68°F WB

2. Office Area

   Winter: 12°F, Summer: 98°F DB, 66°F WB

b) Wind Velocity

Winter: 15 mph, Summer: 15 mph

Design Basis Tornado Pressure Drop - see Structural and Civil Basis for Design, Section 10, Appendix 10B

c) Ground Temperature

The design ground temperature 10 feet below-grade: 55°F.

6.4.2 INSIDE DESIGN CONDITIONS

6.4.2.1 Vitrification Building

a) Room Temperature

1. Cells and other Zone I areas which are designed for personnel access.

   During normal operation:

   Maximum 80°F, Minimum 60°F

   Post-DBA:

   No temperature control

2. Cells which are not designed for personnel access.

   During normal operation:

   Maximum 104°F, Minimum 60°F

   Post-DBA:

   No temperature control

3. Analytical Cells

   During normal operation: 80°F ±5°F

   Post-DBA:

   No temperature control

4. Sample Cell

   During Normal Operation: 80°F ±5°F

   Post-DBA:

   No temperature control

5. Operating galleries and corridors surrounding the cells.

   During normal operation:

   Maximum 78°F, Minimum 68°F

   Post-DBA:

   No temperature control

6. Analytical Laboratory

   During normal operation: 72°F ±2°F

   Post-DBA:

   No temperature control

7. Field Operating Station and Computer Rooms

   During normal operation: 72°F ±2°F

   Post-DBA:

   No temperature control

8. RPT Station, Stock Room, Counting Room, & Office

   During Normal Operation: 72°F ±2°F

   Post-DBA:

   No Temperature Control

9. HVAC Equipment Room

   During normal operation:

   Maximum 85°F, Minimum 65°F

   Post-DBA:

   No temperature control

10. Steam Generator Room

    During Normal Operation:

    Maximum 95°F, Minimum 65°F

    Post DBA:

    No Temperature Control

11. HP Blower Room

    During Normal Operation:

    Maximum 85°F, Minimum 65°F

    Post DBA:

    No Temperature Control

12. Contact Maintenance Room

    During Normal Operation:

    Maximum 85°F, Minimum 80°F

    Post DBA:

    Maximum 104°F, Minimum 80°F

b) Humidity

1. Field Operating Stations and Computer Rooms

   During normal operation: 50% ±5% RH

2. Analytical Cells

During normal operation: 50% ±5% RH

3. Analytical Laboratory

During normal operation: 50% ±5% RH

4. RPT Station, Stock Room, Counting Room, & Office

During Normal Operation: 55% RH (max)

5. Other Areas

No humidity control is provided for other areas of the Vitrification Building. Since the outdoor air is cooled using chilled water prior to supply into the building, the summer relative humidity during normal operation will not exceed 55%.

6.4.2.2 Manipulator Repair Buildings

a) Room Temperature

1. Manipulator repair shop and associated areas

During normal operation:

Maximum: 78°F, Minimum: 65°F

Post-DBA:

No temperature control

2. Offices and Change Rooms

During Normal Operation

Maximum: 78°F, Minimum: 72°F

Post-DBA:

No temperature control

3. HVAC Equipment Room

During normal operation:

Maximum: 85°F, Minimum: 65°F

Post-DBA:

No temperature control

b) Humidity

No humidity control is provided. Since supply air to the Manipulator Repair Shop and associated areas is cooled with chilled water, relative humidity in summer does not exceed 55%.

6.4.2.3 Operations Control Building

a) Room Temperature

1. Control Rooms, Computer Rooms

During normal operation: 72°F ±2°F

Post-DBA:

No temperature control

2. Offices

During normal operation:

Maximum 78°F, Minimum 72°F

Post-DBA:

No temperature control

3. Equipment Room

During normal operation:

Maximum 85°F, Minimum 65°F

Post-DBA:

No temperature control

b) Humidity

1. Control Rooms and Computer Room

During normal operation: 50% ±5% RH

2. Offices

During normal operation: Not to exceed 55% RH

3. Equipment Room

No control

6.4.2.4 Mechanical/Electrical Building

a) Room Temperature

1. Industrial and shop areas

During normal operation:

Maximum 85°F, Minimum 65°F

Post-DBA:

No temperature control

2. For canister storage area

During normal operation:

Maximum 104°F, Minimum 55°F

Post-DBA:

No temperature control

3. Occupied areas (offices, laboratory, operation station, etc.)

During normal operation:

Maximum 78°F, Minimum 72°F

Post-DBA:

No temperature control

4. Equipment rooms

During normal operation:

Maximum 95°F, Minimum 65°F

Post-DBA:

No temperature control

b) Humidity

No control

6.4.2.5 Fan House

a) Room Temperature

1. Equipment rooms

During normal operation:

Maximum 95°F, Minimum 65°F

During and after DBA: Maximum - 120°F

2. Battery room

During normal operation:

Maximum 72°F ±2°F

Post-DBA:

Maximum 104°F, Minimum (not controlled on loss of normal power)

b) Humidity

1. Local operating station and sampling room

During normal operation: 50% ±5% RH

2. Equipment room

No control

6.4.2.6 Canister Storage Building

a) Room Temperature

1. Canister Storage Vault

During normal operation: Max. 140°F

Post-DBA: Max room temperature subject to verification via Thermal Analysis to be performed during Detail Design.

2. Canister Storage Operating Area

During normal operation:

Maximum 104°F, Minimum 55°F

3. Offices

During normal operation:

Maximum 78°F, Minimum 72°F

4. Equipment Rooms

During normal operation:

Maximum 85°F, Minimum 65°F

Post-DBA:

Maximum 120°F, Minimum (not controlled on loss of normal power)

b) Humidity

1. Canister Storage Vault, Canister Storage Operating Area, and Equipment Room

No control

2. Offices

During normal operation: Not to exceed 55% RH

6.4.2.7 Switchgear/Generator Building

a) Room Temperature

1. Normal Switchgear Room

During normal operation:

Maximum 85°F, Minimum 55°F

Post-DBA:

(Not controlled on loss of normal power)

2. Standby Switchgear Rooms 1 and 2

During normal operation:

Maximum 85°F, Minimum 55°F

Post-DBA:

Maximum 120°F, Minimum (not controlled on loss of normal power)

3. Battery Rooms 1 and 2

During normal operation:

Maximum 72°F ±2°F

Post-DBA:

Maximum 120°F, Minimum (not controlled on loss of normal power)

4. Generator Rooms 1 and 2

During normal operation:

Maximum 95°F, Minimum 55°F

Post-DBA:

Maximum 120°F, Minimum (not controlled on loss of normal power)

5. HVAC Equipment Room

During normal operation:

Maximum 85°F, Minimum 55°F

Post-DBA:

Maximum 120°F, Minimum (not controlled on loss of normal power)

b) Humidity

No control

6.4.2.8 Waste Hold Tank

a) Room Temperature

1. Pump Pits

Normal/Post-DBA:

Maximum 104°F, Minimum 55°F

2. Tank Annulus

Normal/Post-DBA:

Maximum 125°F, Minimum 55°F

Normal/Post-DBA:

3. Maintenance Bldg/HVAC Shelter Room

Maximum 104°F, Minimum 50°F

b) Humidity

No control

6.4.2.9 Noise Criteria

a) The following are the indoor ambient design values for areas before occupancy, with HVAC System operating:

Type of Area	Room Criteria Range (dB)
Private Office	30-35
Open Office	35-40
Conference Rooms	25-30
Laboratories	30-35
Public Areas and Corridors/Computer Rooms/Business Machine Areas	35-40

b) Noise in Equipment Rooms 100 to 110 DB

c) Figure 5, Pg. 52.3, ASHRAE 1987 Systems and Application Handbook will be used for Room Criterion calculations.

6.4.3 HVAC SYSTEMS IDENTIFICATION

6.4.3.1 Separate HVAC Systems will be provided for each building structure. The HVAC Systems for the HWVP project are identified as follows:

- Vitrification Building

  System 05A - Vit. Building Zone I Supply System
  System 05B - Vit. Building Zone I Exhaust System
  System 05C - Vit. Building Zone II Supply System
  System 05D - Vit. Building Zone II Exhaust System
  System 05E - Vit. Building Zone III Supply System
  System 05F - Vit. Building Zone III Exhaust System
  System 05G - Vit. Building Zone IV HVAC System
  System 05Z - Analytical/Sample Cells HVAC System

- Canister Storage Building

  System 05I - Canister Storage Supply System
  System 05J - Canister Storage Exhaust System

- Operations Control/Regulated Entrance Building

  System 05K - OC/REB Supply System
  System 05L - OC/REB Exhaust System
  System 05M - OC/REB Control/Computer Room Supply System
  System 05N - OC/REB Control/Computer Room Exhaust System

- Manipulator Repair Building

  System 05P - Manipulator Repair Building Supply System
  System 05Q - Manipulator Repair Building Exhaust System

- Service Building

  System 05R - Service Building Supply System
  System 05S - Service Building Exhaust System

- Fan House Building

  System 05T - Fan House Supply System
  System 05U - Fan House Exhaust System

- WHT Maintenance Building

  System 05V - WHT Supply System
  System 05W - WHT Exhaust System

- Switchgear/Generator Building

  System 05X - Switchgear/Generator Supply System
  System 05Y - Switchgear/Generator Exhaust System

6.4.3.2 The HVAC System Design Requirements for the above-listed buildings are described in detail in Sections 6.7 through 6.14, respectively.

6.4.4 HYDRONIC SYSTEMS IDENTIFICATION

6.4.4.1 The Hydronic Systems provided for the HWVP project will be as follows:

- System 03A-Central Chilled Water System
- System 03B-OCB Chilled Water System
- System 03C-Heat Recovery System

6.4.4.2 The Hydronic System Design Requirements for the above-listed systems are described in detail in Sections 6.15 through 6.17.

6.4.5 EQUIPMENT SELECTION CRITERIA

6.4.5.1 The criteria published in ASHRAE Standard 90A and DOE Order 6430.1A, Section 1550-2 for equipment performance and selection will be followed. Economics and alternatives will be considered in accordance with DOE Order 6430.1A, Section 0110-12.2, where

applicable. Energy metering will be provided in accordance with DOE Order 6430.1A, Section 1595-11. (HWV-FDC-001, Section 4.1.13.3)

6.4.5.2 All HVAC equipment will be selected for operation at the altitude specified in the site design conditions subsection (Subsection 6.4.1).

6.4.5.3 **Water Chillers** will be selected in accordance with DOE 6430.1A, Section 1550-2.1.2.

6.4.5.4 **Air Handling Units** will be selected in accordance with DOE 6430.1A, Section 1550-2.5.2.

6.4.5.5 **Fans/Motors** will be selected in accordance with DOE 6430.1A, Section 1550-2.5.3. Fan bearings will be specified for 200,000 hours of bearing life. Bearings will be located out of the airstream. Bearings will be protected by bearing isolators to ensure containment of lubricant and prevent intrusion of environment contamination including sustained directed hosedown.

6.4.5.6 **Hydronic Coils** will be selected in accordance with DOE 6430.1A, Section 1550-2.5.4.

6.4.5.7 **Air Cleaning Devices** will be selected in accordance with DOE 6430.1A, Section 1550-2.5.5.

6.4.5.8 **Dampers** will be selected in accordance with ANSI N509, Section 5.9.

6.4.5.9 **Air Distribution Devices** such as diffusers, grilles, and registers will be selected in accordance with ASHRAE 1985 Fundamentals Handbook, Chapter 32.

6.4.6 AIR DISTRIBUTION SYSTEM DESIGN REQUIREMENTS

6.4.6.1 Ductwork, accessories, and support systems will be designed to comply with the following (DOE 6430.1A, Section 1550-2.5.6):

a) ASHRAE 1985 Fundamentals Handbook, Chapter 33.

b) SMACNA High, Medium and Low Pressure Duct Construction Standards.

c) SMACNA HVAC Duct Design Manual.

d) SMACNA Round Industrial Duct Construction Standards.

e) ERDA 76-21, Nuclear Air Cleaning Handbook, Chapter 5.

f) ANSI N509-1980, Nuclear Power Plant Air Cleaning Units and Components, Section 5.10.

6.4.6.2 Ductwork required to support and maintain building confinement during DBA condition is defined as safety-related and will be

designed to withstand the affects of the DBA as determined by analysis. The type and extent of analysis required are as shown in the Structural Project Design Basis Design Guide. The nonsafety-related ductwork for both supply and exhaust will be designed in accordance with appropriate SMACNA standards.

6.4.6.3 Supply air inlet location will minimize the possibility of recirculating facility exhaust air. Supply air inlets will be equipped with screens of corrosion-resistant material, not larger than 1/2-inch mesh and will be protected against birds and the effects of high winds and tornadoes, windblown trash, snow, ice and hoarfrost. (HWV-FDC-001, Section 4.2.2.1.)

6.4.6.4 The exhaust system ducts will be fabricated with stainless steel, as shown on construction drawings, and concrete exhaust plenum will have a protective coating resistant to deterioration by radiation, process chemical and moisture to facility decontamination. To ensure isolation, there will be no common walls between supply and exhaust air tunnels or ducts. (HWV-FDC-001, Section 4.2.2.2.)

6.4.6.5 All metal ductwork handling contaminated or potentially contaminated exhaust air will be of all welded construction with intermediate flanged joints and will be designed with a minimum of ledges, protrusions and crevices that could collect dust or moisture to facilitate erection, dismantling and decontamination. Ductwork will be kept to a minimum in potentially contaminated areas (DOE 6430.1A, Section 1300-11.1) and will meet the maximum allowable leakage as described in Table 4-3, ANSI N509.

6.4.6.6 Supply ducts will be designed to limit resistance pressure losses to between 0.08 and 0.1 inches WG per 100 feet equivalent length. Exhaust ducts will be sized for transport velocities needed to convey, without settling, all particulate contaminants, but velocity should not exceed 2500 fpm.

6.4.6.7 Ductwork should be designed to maintain an aspect ratio as close to 1:1 as practical and will maintain six inches of clearance from outside of duct or duct insulation to all other structures and components. Supply ducts will be designed with mitered elbows equipped with turning vanes. Exhaust ducts will use smooth radius elbows equipped with turning vanes. Volume extractors should be used on branch junctions where proportional take-offs cannot be installed. Access doors or inspection panels will be provided for all internal HVAC components and locations will be noted on construction drawings. These openings will be fully gasketed and sealed using either bolts or bulkhead-type latches.

6.4.6.8 No thermal or sound insulation will be specified inside ducts handling potentially contaminated air or located in potentially contaminated areas. Insulation placed on the outside of exposed ducts or ducts located in potentially contaminated areas will be metal jacketed.

6.4.6.9 Automatic air control dampers will be designed to be low-leakage, with a maximum leakage of 6 cfm per square foot of damper area, at a maximum velocity of 1500 fpm and 1 inch WG pressure differential. The dampers will be opposed-blade type for modulating service, but may be parallel-blade type for two-position control. Dampers should be sized for at least 20% of the total ductwork resistance pressure loss. Pilot positioners and operators will be out of the air stream (DOE 6430.1A, Section 1595-6.3).

6.4.6.10 Volume Dampers will be provided, as required, to control and balance air flows. Dampers must be accessible for operation and repair. (HWV-FDC-001, Section 4.2.1.)

6.4.6.11 Backdraft dampers will meet the leakage requirements described in ANSI-N509, Section 5.9, Tables 5.2. and 5.3.

6.4.7 EXHAUST STACKS

6.4.7.1 The stack(s) will be lined or constructed with an acid-resistant material. An elevated stack will be used for confinement exhaust discharge. Stack height will be sufficient to meet dispersion requirements for normal as well as DBA releases, but at least 2-1/2 times the height of nearby structures. Stack location and height will also consider intake an the facility and adjacent facilities to preclude uptake. Stacks mounted on the Vitrification Building will discharge air above the building wake in accordance with recommended practices to prevent recirculation of exhaust air. (DOE 6430.1A, Section 1550-99.0.2; HWV-FDC-100, Section 4.2.2.2).

6.4.7.2 Provisions will be made to ensure an adequate Zone ventilation exhaust discharge path in the event of stack failure. Stacks will be located so that they cannot fall on the facility or an adjacent facility containing safety class items. The alternative is the construction of a stack that will remain functional following a DBE, severe natural phenomena, and man-made events. (DOE 6430.1A, Section 1500-99.0.2.)

6.4.7.3 The exhaust air discharge velocity from the stack will be 2500 FPM (minimum) per 1985 ASHRAE Fundamentals, Pg. 14.12:

6.4.7.4 Independent exhaust stacks will be provided for the following:

- Vitrification Bldg. - Zone I Exhaust
- Vitrification Bldg. - Zone II/III Exhaust
- Canister Storage Bldg. Exhaust

6.4.8 TESTING, ADJUSTING AND BALANCING

6.4.8.1 Testing, adjusting and balancing will be in accordance with DOE 6430.1A, Section 1550-3.2.

6.4.8.2 HVAC air and water systems will be provided with permanently installed calibrated testing and balancing devices and access as

needed to accurately measure and adjust water flows or air flows, pressures, or temperatures, as required. The testing and balancing devices as noted in Tables 1550-3.2a and 1550-3.2b will be provided as a minimum. The testing and balancing devices will be installed in accordance with AABC Volume A-82. (DOE 6430.1A, Section 1550-3.2.)

6.4.8.3 Test and measuring locations will be noted on construction drawings. The use of duct-mounted air flow monitoring stations will be considered where limited duct space or configuration restricts the use of pitot tube traverse procedures or where especially sensitive measuring requirements are dictated (DOE 6430.1A, Section 1550-3.3).

6.4.9 FIRE PROTECTION REQUIREMENTS

6.4.9.1 Where fire barriers are penetrated by the confinement system's ventilation ducting, fire dampers of appropriate rating will be used to maintain the barrier integrity. However, the closure of such dampers will not compromise the functions of the confinement system where loss of confinement might pose a greater threat than the spread of fire. In such cases, alternative fire protection means (e.g., duct wrapping) will be used as a substitute for fire barrier closure. In no case will a sprinkler system (including safety class sprinklers) be considered a fire barrier substitute. (DOE 6430.1A, Section 1530-99.0)

6.4.9.2 Engineered smoke control systems will be utilized to prevent migration of products of combustion between various areas. Smoke control systems are secondary to, and will never override systems used to control spread of radioactive particles.

6.4.9.3 HEPA Filtration System serving as a final means of effluent cleaning should have at least two stages of fire-resistant filters in series, either in the same plenum or in two separate plenums. A heat removal system and a spark arrestor will precede the first stage of filtration when determined to be necessary by the fire safety analysis. If a cooling spray is used for heat removal, it should be followed by a combination spark arrestor/demister screen to remove entrained droplets for protection from plugging or other damage.

6.4.9.4 The cooling spray system should operate automatically upon abnormal heat rise in the cooling chamber inlet as indicated by thermal detectors. Manual override of automatic initiation and manual actuation of the spray system will be provided.

6.4.9.5 Ductwork will be designed to comply with NFPA 90A, including specification and installation of smoke and fire dampers at fire wall penetrations and smoke pressurization/containment dampers as required for smoke pressurization/evacuation systems (DOE 6430.1A, Section 1550-2.5.6).

6.4.9.6 Exhaust ductwork will comply with NFPA 91 (DOE 6430.1A, Section 1550-2.5.6).

6.4.9.7 Fresh air intakes will be located so as to prevent the introduction of fire into the building from other combustible buildings and hazardous facilities or the intakes will be equipped with an approved fire damper (NFPA 90A, Section 3-3.6).

6.4.9.8 A service opening will be provided in ducts adjacent to each fire door and fire damper. The opening will be large enough to permit maintenance and resetting of the device. Service openings will be identified with letters no less than 1/2 inch in height to indicate the location of the fire detection device(s) within. (NFPA 90 A, Section 2-1.4.)

6.4.10 PROCEDURES FOR CALCULATIONS

6.4.10.1 Heating and Cooling Load

a) Heating and cooling load calculations for all buildings except Generator/Switchgear, Fan House, and WHT/Maintenance Buildings will be performed using HCC-III, Version III, Level 03, Heating/Cooling Load Calculation Program developed by Automated Procedures for Engineering Consultants, Inc. (APEC).

b) Heating and cooling load calculations for Generator/Switchgear, Fan House, and WHT/Maintenance buildings will be performed manually using ASHRAE 1985 Fundamentals.

6.4.10.2 Duct Pressure Drop

Duct pressure drop calculations will be performed using the equal friction method in accordance with ASHRAE 1985 Fundamentals.

6.4.10.3 Infiltration

Infiltration calculations will be performed in accordance with "Conventional Buildings for Reactor Containment," NAA-SR-10100, Atomics International, July 25, 1965.

6.5 <u>SPECIFICATIONS</u>

6.5.1 Specifications will be prepared in accordance with Section 4.6 of the PMCM.

6.5.2 Specifications will be prepared to define all electrical equipment and materials as well as their installation and testing.

6.5.3 The specifications which will be prepared during preliminary design are listed on Attachment "A".

6.5.4 The specifications which will be prepared during detailed design are (TBD).

6.6 DRAWINGS

6.6.1 Drawings will be prepared in accordance with Section 4.4 of the PMCM.

6.6.2 The following categories of HVAC drawings will be prepared:

a) Legend, symbols, and general notes

b) HVAC flow and control diagrams

c) HVAC layout and details

d) HVAC zone

6.6.3 The drawings which will be prepared during preliminary design are listed in the applicable reference drawing subsections of HVAC and Hydronic Systems, Sections 6.7 through 6.17.

6.6.4 The drawings which will be prepared during detailed design are (TBD).

6.7 VITRIFICATION BUILDING HVAC SYSTEMS (SYSTEMS 05A THROUGH 05G AND 05Z)

The Vitrification Building HVAC Systems (System 05A/B, C/D, E/F, and G/Z) provide an integrated HVAC System design for the entire building.

6.7.1 REFERENCE DRAWINGS

The Vitrification Building HVAC Systems are shown on the HVAC Flow and Control Diagrams, General Arrangement Drawings, and HVAC Layout Drawings. Pertinent drawings are listed below:

6.7.1.1 HVAC Flow and Control Diagrams

Drawing No.	Title
H-2-129800	Vitrification Building Zone I Composite
H-2-129801	Vitrification Building Zone II & III Composite
H-2-129802 Sheet 1	Vitrification Building Zone I Supply
H-2-129802 Sheet 2	Vitrification Building Zone I Supply
H-2-129803	Vitrification Building Zone I ST/ET & CDC Areas
H-2-129804	Vitrification Building Zone I Canyon CBMC & CMA Areas
H-2-129805	Vitrification Building Zone I Canyon RW & CDMC Areas
H-2-129806 Sheet 1	Vitrification Building Zone I REDC, HEME, RLST & CPC Areas
H-2-129806 Sheet 2	Vitrification Building Zone I REDC, HEME, RLST & CPC Areas

H-2-129807 Sheet 1	Vitrification Building Zone I Sand Filter & Energy Bypass Filt. Plen.
H-2-129807 Sheet 2	Vitrification Building Zone I Sand Filter & Energy Bypass Filt. Plen.
H-2-129807 Sheet 3	Vitrification Building Zone I Sand Filter & Energy Bypass Filt. Plen.
H-2-129808 Sheet 1	Vitrification Building Zone I Exhaust Filter Plenums
H-2-129808 Sheet 2	Vitrification Building Zone I Exhaust Filter Plenums
H-2-129808 Sheet 3	Vitrification Building Zone I Exhaust Filter Plenums
H-2-129809 Sheet 1	Vitrification Building Zone I Exhaust Fans
H-2-129809 Sheet 2	Vitrification Building Zone I Exhaust Fans
H-2-129809 Sheet 3	Vitrification Building Zone I Exhaust Fans
H-2-129809 Sheet 4	Vitrification Building Zone I Exhaust Fans
H-2-129810 Sheet 1	Vitrification Building Zone III Supply
H-2-129810 Sheet 2	Vitrification Building Zone III Supply
H-2-129810 Sheet 3	Vitrification Building Zone III Supply
H-2-129811 Sheet 1	Vitrification Building Zone III Areas
H-2-129811 Sheet 2	Vitrification Building Zone III Areas
H-2-129811 Sheet 3	Vitrification Building Zone III Areas
H-2-129812 Sheet 1	Vitrification Building Zone III Exhaust & Zone II Supply
H-2-129812 Sheet 2	Vitrification Building Zone III Exhaust & Zone II Supply
H-2-129812 Sheet 3	Vitrification Building Zone III Exhaust & Zone II Supply
H-2-129812 Sheet 4	Vitrification Building Zone III Exhaust & Zone II Supply
H-2-129812 Sheet 5	Vitrification Building Zone III Exhaust & Zone II Supply
H-2-129812 Sheet 6	Vitrification Building Zone III Exhaust & Zone II Supply
H-2-129812 Sheet 7	Vitrification Building Zone III Exhaust & Zone II Supply
H-2-129812 Sheet 8	Vitrification Building Zone III Exhaust & Zone II Supply
H-2-129813 Sheet 1	Vitrification Building Zone II Areas
H-2-129813 Sheet 2	Vitrification Building Zone II Areas
H-2-129813 Sheet 3	Vitrification Building Zone II Areas
H-2-129813 Sheet 4	Vitrification Building Zone II Areas
H-2-129813 Sheet 5	Vitrification Building Zone II Areas
H-2-129813 Sheet 6	Vitrification Building Zone II Areas
H-2-129813 Sheet 7	Vitrification Building Zone II Areas
H-2-129813 Sheet 8	Vitrification Building Zone II Areas
H-2-129813 Sheet 9	Vitrification Building Zone II Areas
H-2-129814 Sheet 1	Vitrification Building Zone II Areas
H-2-129814 Sheet 2	Vitrification Building Zone II Areas
H-2-129815 Sheet 1	Vitrification Building Zone II Areas
H-2-129815 Sheet 2	Vitrification Building Zone II Areas
H-2-129816 Sheet 1	Vitrification Building Zone II Exhaust Plenum
H-2-129816 Sheet 2	Vitrification Building Zone II Exhaust Plenum

H-2-129816 Sheet 3	Vitrification Building Zone II Exhaust Plenum
H-2-129816 Sheet 4	Vitrification Building Zone II Exhaust Plenum
H-2-129816 Sheet 5	Vitrification Building Zone II Exhaust Plenum
H-2-129816 Sheet 6	Vitrification Building Zone II Exhaust Plenum
H-2-129816 Sheet 7	Vitrification Building Zone II Exhaust Plenum
H-2-129816 Sheet 8	Vitrification Building Zone II Exhaust Plenum
H-2-129817 Sheet 1	Vitrification Building Zone II Exhaust Fans
H-2-129817 Sheet 2	Vitrification Building Zone II Exhaust Fans
H-2-129818 Sheet 1	Train A Zone I Stack Exhaust
H-2-129818 Sheet 2	Train B Zone I Stack Exhaust
H-2-129818 Sheet 2	Vitrification Building Zone I Stack Effluent Monitoring
H-2-129819	Vit. Bldg. Zone I Analytical Cells & Sample Cell Supply Fans
H-2-129820	Vit. Bldg. Zone I Analytical Cells & Sample Cell Filter Plenum
H-2-129821	Vitrification Building Zone I Analytical Cells & Sample Cell
H-2-129822 Sheet 1	Regulated Entrance Building Zone II/III Areas
H-2-129822 Sheet 2	Regulated Entrance Building Zone II/III Areas
H-2-129823 Sheet 1	Vitrification Building Zone II Analytical Laboratory Hoods
H-2-129823 Sheet 2	Vitrification Building Zone II Analytical Laboratory Hoods
H-2-129823 Sheet 3	Vitrification Building Zone II Analytical Laboratory Hoods
H-2-129823 Sheet 4	Vitrification Building Zone II Analytical Laboratory Hoods
H-2-129823 Sheet 5	Vitrification Building Zone II Analytical Laboratory Hoods
H-2-129823 Sheet 6	Vitrification Building Zone II Analytical Laboratory Hoods
H-2-129824	Vitrification Building Zone IV HVAC Equipment Room
H-2-129825 Sheet 1	Train A Zone II & III Exhaust Stack
H-2-129825 Sheet 2	Train B Zone II & III Exhaust Stack
H-2-129826 Sheet 1	Vitrification Building Zone IV Railroad Washdown Areas
H-2-129826 Sheet 2	Vitrification Building Zone IV Railroad Washdown Areas
H-2-129940 Sheet 1	Vitrification Building Atmospheric Reference Pressure Header
H-2-129940 Sheet 2	Vitrification Building Atmospheric Reference Pressure Header

6.7.1.2 General Arrangement Drawings

Drawing No.	Title
H-2-118020	Vitrification Building Tunnel Plan - South End
H-2-118021	Vitrification Building Tunnel Plan - North End
H-2-118022	Vitrification Building First Floor Plan - South End
H-2-118023	Vitrification Building First Floor Plan - North End

H-2-118024	Vitrification Building Mezzanine Level Plan - South End
H-2-118025	Vitrification Building Mezzanine Level Plan - North End
H-2-118026	Vitrification Building Second Floor Plan - South End
H-2-118027	Vitrification Building Second Floor Plan - North End
H-2-118028	Vitrification Building Third Floor Plan - South End
H-2-118029	Vitrification Building Third Floor Plan - North End
H-2-118030	Vitrification Building Fourth Floor Plan - South End
H-2-118031	Vitrification Building Fourth Floor Plan - North End
H-2-118032	Vitrification Building Third Floor Mezzanine & Misc. Details
H-2-118033	Vitrification Building Roof Plan - South End
H-2-118034	Vitrification Building Roof Plan - North End
H-2-118035	Vitrification Building Partial Section A - South End
H-2-118036	Vitrification Building Partial Section A - North End
H-2-119037	Vitrification Building Partial Section B - South End
H-2-119038	Vitrification Building Partial Section B - North End
H-2-119039	Vitrification Building Section C
H-2-119040	Vitrification Building Sections D and M
H-2-119041	Vitrification Building Section E
H-2-119042	Vitrification Building Partial Section F - South End
H-2-119043	Vitrification Building Partial Section F - North End
H-2-119044	Vitrification Building Partial Section G - South End
H-2-119045	Vitrification Building Partial Section G - North End
H-2-119046	Vitrification Building Partial Section H - South End
H-2-119047	Vitrification Building Partial Section H - South End
H-2-119048	Vitrification Building Section J
H-2-119049	Vitrification Building Section K

6.7.2 FUNCTIONAL DESIGN CRITERIA (FDC) DOCUMENT

The following sections of the FDC document are applicable to the Vitrification Building HVAC Systems:

FDC Section	Title
1.3.5.3	Contamination Control
2.4	Decommissioning

4.1.13 Energy Conservation

4.2 Heating, Ventilation, and Air Conditioning

6.7.3 TECHNICAL DATA PACKAGE (TDP) DOCUMENT

The following sections of the TDP document are applicable to the Vitrification Building HVAC Systems:

Section	Item	Title
5	200	Facility - Vitrification Building
5	600	Facility - Zone I Filter Building
5	800	Facility - Exhaust Stack
7	100	HVAC - Vitrification Building

6.7.4 ASSUMPTIONS AND REFERENCES

6.7.4.1 Assumptions

a) The installed capacity of the HVAC equipment will be limited to 120% of peak design load unless additional capacity is required for operational reliability. Multiple fans will be provided for each type of service.

Basis: SD-HWP-DP-001, Section 7, Item 100.

b) The Zone I Area HVAC system is designed to operate continuously. Sufficient redundancy is provided to ensure that maintenance activities or failure of any single component will not significantly affect system operation. The operation of the exhaust fans and the supply fan is interlocked to prevent pressurization of Zone I areas.

Basis: TDP, Section 7, Item 100.

c) Minimum air velocity through open cell covers (maximum open area 400 square feet) will be 50 FPM for the Chemical Process Cell and Melter Cell.

Basis: To confine airborne contamination within the Chemical Process Cell and Melter Cell when the cell covers are removed for maintenance.

d) The Zone II and III areas HVAC systems will be designed to operate continuously without being shutdown for maintenance or equipment failure. The operation of the exhaust fans, the transfer air fans, and the supply fans are interlocked to prevent pressurization of Zones II and II areas on start-up or equipment failure.

Basis: TDP Section 7, Item 100

e) Minimum air change rate for Zone II area will be five to ten air changes per hour. The smaller air change rate is for large open areas and the higher air change rate is for small confined areas. The design air flow will also consider the area heat loads.

Basis: This rate is sufficient for prompt reduction of airborne contamination in the event of an accidental release and for providing a good air change rate during normal operations.

f) Minimum air change rate for Zone III area will be three to five air changes per hour. The smaller air change is for large open areas. The design air flow will also consider the area heat loads.

Basis: This rate provides a good air change rate for non-contaminated areas.

6.7.4.2 References

a) SD-HWP-DP-001, Section 7, Item 100

6.7.5 SYSTEM DESCRIPTION

6.7.5.1 Functional Requirements

6.7.5.1.1 Vitrification Building Zone I HVAC Systems (Systems 05A, 05B, 05Z)

The Vitrification Building Zone I HVAC System (05A and 05B) is shown on HVAC Flow and Control Diagrams H-2-129800, 129802 through 129809, and 129818. The following functions are performed:

- Maintain temperature and ventilation rates in the Vitrification Building Zone I areas for safety of personnel and protection of equipment.
- Maintain proper pressure differentials in the Vitrification Building Zone I areas so that airflow is always from areas of lower levels of contamination toward areas of higher contamination.
- Provide filtration of exhaust from the Vitrification Building Zone I areas to the outside atmosphere.

The Vitrification Building Zone I areas are served by Air Handling Units (AH-05A-701, 702, 703, and 704) and Supply Fans (BL-05A-711, 712, 713, and 714) which supply conditioned outside air to the Canister Decontamination Cell (CDC), the Crane Busbar Maintenance Corridor (CBMC), the Contact Decontamination and Maintenance Cell (CDMC), Crane Maintenance Area (CMA), Contact Maintenance Room (CMR), the Railroad Well (RW), and the Canyon.

The ventilation air from the CDC, CBMC, CDMC, CMA, and RW cascades into the Canyon. It cascades from the Canyon into the Remote Equipment Decontamination Cell (REDC), Laydown Area, Melter Cell (MC), Melter Off-Gas (MOG) Cell and the Chemical Process Cell (CPC). The ventilation air from the REDC, Laydown Area, MC, MOG Cell, and CPC is exhausted through the Sand Filter and HEPA Filter Plenums (PF-05B-701 through 712) by Exhaust Fans (BL-5B-721 through 724) to the outside environment via the Zone I Stack. Emergency stack bypass is provided to facilitate venting of Zone I areas in the event of the Zone I Stack failure. In addition, the Sand Filter has an emergency bypass with HEPA Filter Plenums (PF-05B-713, 714, 715, and 716).

The Vitrification Building Analytical/Sample Cells HVAC System 05Z is shown on HVAC Flow and Control Diagrams H-2-129819 through 129821. The following functions are performed:

- Maintain temperature, humidity and ventilation rates in the Analytical/Sample Cells to satisfy process requirements.

- Maintain negative pressure in the cell with respect to the surrounding areas. The Analytical/Sample Cells are ventilated by two redundant Supply Fans (BL-05Z-731 and 732) and filtered by one Filter Plenum (PF-05Z-721). Supply air is also cooled, heated and humidified before being supplied to the Analytical/Sample Cells.

  A detail system operation narrative for the Vitrification Building Zone I HVAC System is provided in the Vitrification Building HVAC System Process Control Description (PCD) DS-05A.

6.7.5.1.2 Vitrification Building Zone II HVAC System (05C and 05D)

The Vitrification Building Zone II HVAC System (05C and 05D) is shown on HVAC Flow and Control Diagrams H-2-129812 through 817, H-2-129823 and H-2-129825. The system performs the following functions:

- Maintain temperature and ventilation rate in the Vitrification Building Zone II areas and Regulated Entrance Facility Zone II areas.

- Maintain proper pressure differentials in the Vitrification Building Zone II areas and Regulated Entrance Facility Zone II areas with the respect to the outside environment, so that the leakage airflow within the building is always from Zone III areas into Zone II areas, and Zone II areas into Zone I areas.

Zone II air is supplied by the exhaust of the Zone III system after being filtered by the Zone III exhaust filter plenums. Three of four Zone II Supply Fans (BL-05C-721 through 224) provide air which is conditioned prior to supplying the Zone II portions of the Vitrification Building and Regulated Entrance Facility.

The Zone II exhaust system consists of 15 HEPA Filter Plenums (PF-05D-701 through 715), three of four Exhaust Fans (BL-05D-721 through 724), and the two hood exhaust fan systems.

The Zone II exhaust filtration system draws the air from Zone II areas of the Vitrification Building and filters it prior to being released to the atmosphere via the Zone II exhaust stack. Each of the Zone II exhaust filter plenum units consists of: manual isolation dampers, mist eliminator and two HEPA filter banks.

The gas sampling hoods in the Remote Operating Gallery Room, decon hood in the Sample Receiving Room and all fume hoods in the Analytical/Sample Service are exhausted by one of two Exhaust Fans (BL-05D-751 and 752) which discharge into the Zone II exhaust filter plenums.

The Radio Bench Hood, Glove Boxes and all the Fume Hoods in the Analytical Lab and Sample Receiving Room are exhausted by one of two Exhaust Fans (BL-05D-741 and 742) which discharge into the Zone II exhaust filter plenums.

A detail system operation narrative for the Vitrification Building Zone II HVAC System is provided in the Vitrification Building HVAC System PCD DS-05A.

6.7.5.1.3 Vitrification Building Zone III HVAC System (05E and 05F)

The Vitrification Building Zone III supply system is shown on the HVAC Flow and Control Diagrams H-2-129810, H-2-129811, H-2-129812, H-2-129822 and performs the following functions:

- Maintains temperature and ventilation rate in the Vitrification Building Zone III areas and Regulated Entrance Facility Zone III areas. This system also supplies conditioned air for Zone II.

- Maintains proper pressure differentials in the Vitrification Building Zone III areas and Regulated Entrance Facility Zone III areas with respect to the outside environment, so that the leakage airflow is always from the outside environment into the building and the leakage airflow within the building is always from Zone III areas into Zone II areas.

Outside air is drawn into the Vitrification Building through four of five Air Handling Units (AH-05E-701 through 705) and by three of four Supply Fans (BL-05E-721 through 724). Conditioned outside air is supplied to the Vitrification Building Zone III areas and the Regulated Entrance Facility Zone III areas. A typical Air Handling Unit consists of heat recovery coil, preheat coil, prefilter, high efficiency filter, electric heating coil, cooling coil, and isolation dampers.

Zone III air exhausts through 15 Zone III HEPA Filter Plenums (PF-05F-701 through PF-05F-715 into Zone II).

A detail system operation narrative for the Vitrification Building Zone III HVAC System is provided in the Vitrification Building HVAC System PCD DS-05A.

6.7.5.1.4 Vitrification Building Zone IV HVAC System (05G)

The Vitrification Building Zone IV HVAC Equipment Room System is shown on HVAC Flow and Control Diagram H-2-129824. The following functions are performed:

- Maintain temperature and ventilation in the HVAC Equipment Room 402.
- Maintain temperature, humidity, and ventilation in Field Operating Station 03 Room (TBD) and Stack Monitoring Room (TBD).
- Maintain positive pressure in these rooms, with respect to the outside atmosphere, so that the leakage airflow is always from the rooms to the outside.

The HVAC Equipment Room 402 is supplied by two Air Handling Units (AH-05G-701 and 702). Each unit consists of a mixing box section, prefilter section, electric heating coil, evaporative cooler, and Supply Fan (BL-05G-701 and 702).

The ventilation air is exhausted from the Zone IV HVAC Equipment Room through Backdraft Dampers (BD-05G-001 and 002).

The Field Operating Station 03 Room and Stack Monitoring Room have two air conditioning units each (AC-05G-709 through 712).

A detail system operation narrative for the Vitrification Building Zone IV HVAC System is provided in the Vitrification Building HVAC System PCD DS-05A.

6.7.5.2 System Interfaces

Systems that interface with the Vitrification Building HVAC Systems include the following:

a) Central Refrigeration System (System 03A) - provides chilled water to the cooling coils.

b) Heat Recovery System (System 03B) - provides recovered heat from the Zone II Exhaust Air to the Zone III Supply Air Heat Recovery Coils.

c) Melter Off-gas System (System 14) - off-gas is discharged into the Zone I exhaust tunnel.

d) Process Vessel Vent System (System 15) - off-gas is discharged into the Zone I exhaust tunnel.

e) Normal Electrical Distribution System (System 32) - provides normal power to heating and ventilation system components.

f) Standby Electrical Distribution System (System 33) - provides standby power to the Zone I exhaust fans.

g) Compressed Air System (System 41) - provides instrument air for pneumatic control components.

h) Sanitary Water and Fire Water System (System 49) - provides a source of clean water to humidifiers and evaporative coolers.

i) Nonradioactive Liquid Waste Handling Systems (System 53) - receives discharged cooling-coil condensate, humidifier flush, and evaporative cooler flush via drains.

j) Distributed Control Systems (System 61) - provides control of ventilation systems.

6.7.5.3 Process Description

6.7.5.3.1 The Vitrification Building HVAC Systems general requirements are listed below:

a) All air supply systems will be equipped with installed spare components to provide normal ventilation during routine maintenance.

b) The exhaust air from the Vitrification Building is filtered by at least two stages of High Efficiency Particulate Air (HEPA) filters or equivalent filtration prior to its discharge into the environment. Zone I exhaust air is treated by the sand filter and then by a single-stage final exhaust HEPA system. Zone II/III exhaust air is treated by two stages of HEPA filters located within the same plenums.

c) Motive force for the exhaust air system should be provided by multiple fans downstream of the filters. Operation of standby fans is to be initiated by abnormal pressure in the ventilation system. Failure of a single fan in any exhaust system will not shut down production operation.

d) Zone II exhaust air will pass through two stages of HEPA filtration prior to discharge into the environment.

e) Zone III exhaust air will pass through at least one stage of HEPA filtration prior to cascading into the Zone II areas.

f) Enclosed work spaces will be provided at the Zone II exhaust HEPA filter plenums for contamination control. This work space

is used for bagging of filters and removal of anti-contamination clothing.

g) Air flow through open ports into all canister transfer tunnels will comply with the general concept of flow from zones of low contamination potential toward zones of greater contamination potential.

h) The Analytical Cells and Sample Cell HVAC System will be designed to operate continuously without being shut down for maintenance or equipment failure for extended periods of time.

i) Ventilation air requirements for the battery room will be designed to ensure that the hydrogen concentration will not exceed 4% of the room volume.

j) Field Operating Station 01, Local Operating Station, the Computer Room, and Field Operating Station 02 are pressurized to prevent entry of contamination into these areas in the unlikely event of contamination in adjacent Zone III areas.

k) All glove boxes will have HEPA filters on the air inlet and all fume hoods should be provided with backflow protection. All glove boxes and fume hoods will be provided with HEPA filters on the outlet.

l) The exhaust air from all hoods in the Vitrification Building, and the glove boxes in the Manipulator Shop Building, will pass through the Zone II Exhaust filtration system prior to discharge into the environment.

m) Velocity through opening of the variable air volume hoods will be maintained constant by modulation of associated dampers.

n) Airflow through constant volume exhaust hoods will be maintained constant utilizing bypass grilles. The bypass grilles will be an integral part of the hood design.

6.7.5.3.2 The Vitrification Building sand filter has the following general requirements:

a) The sand filter will consist of an air inlet and distribution system, a temporary bypass system for start-up, the filter bed, and an air exit system. The air inlet and distribution system must be corrosion-resistant. The bypass is provided to route Vitrification Building exhaust air around the sand filter until hot start-up of the system. The bypass will be a temporary item. Design of the bypass will ensure that unfiltered air cannot bypass the filter after hot start-up. The filter bed must consist of graded layers of rock and sand designed for a filtration efficiency of 99.95% when tested with DOP in accordance with applicable procedures of ANSI-N510 at an air velocity of 5 FPM.

b) The size of the sand filter will depend on the size of the Zone I areas in the processing building and the quantity of ventilation air from those zones. Space will be reserved for expansion of the sand filter.

c) Safety-related sumps and sump pumps will be provided for collection of condensate and any water entering the sand filter or the air tunnel system. Facilities will be provided for transferring the liquid to the Vitrification Building through underground stainless steel lines that are protected against corrosion. A containment jacket is not required on these lines. Cathodic protection will be provided.

d) An air lock for access to the sand filter for periodic inspection will be provided. Provide permanent lighting within the sand filter, with switches at the air lock entrance, of sufficient intensity for safe movement of personnel.

e) The interior surfaces of the sand filter and the air tunnels will be treated with protective coating resistant to deterioration by radiation, process chemicals, vapors, and moisture.

f) All air tunnels will be the minimum length necessitated by area layout and seismic Safety Class 1 requirements. The tunnel between the Sand Filter and Fan House may be eliminated if seismic design permits the exhaust fan installation to be adjacent to the Sand Filter.

g) A Safety Class 1 sampling area will be provided between the discharge fans and the stack to provide air sampling needs and flow measurement.

h) Monitor tubes for occasional radiation profile measurements through the filter beds are required. A set of 6-inch diameter tubes spaced 30 feet apart along the filter is required about one-third of the way across the filter bed and a second set of 6-inch diameter tubes also spaced 30 feet apart is required about two-thirds of the way across the filter bed.

i) Provide a minimum of three eight-pipe groups of different lengths into the filter bed for occasional pressure differential measurement.

j) Provide a pipe through the filter roof for occasional measurement of air activity above the sand bed.

k) Provide a minimum of three risers for access to the sand bed through the roof.

l) Provide pipe in the Sand Filter supply tunnel for inspection and sampling of the tunnel by periscope.

m) Provide one set of five instrument taps across the supply duct. Four of the taps will be used for occasional flow measurement. The center tap will be used for continuous flow measurement.

n) Provide an instrument tap downstream of the Sand Filter for measuring differential pressure across the filter. Differential pressure and inlet air flow measurements will be recorded.

o) Provisions will also be made for injecting DOP into the incoming air supply and sampling upstream and downstream of the filter to permit determination of filter efficiency.

p) If additional HEPA filters are required downstream of the Sand Filter, they will be located in a Safety Class 1 structure.

6.7.5.4 Equipment Description

The major HVAC components for the Vitrification Building are listed in Table 6.7.5.4-1. A complete list of all HVAC components is provided in the Vitrification Building HVAC System PCD DS-05A.

Table 6.7.5.4-1

VITRIFICATION BUILDING HVAC COMPONENTS

Equipment ID	Description	Design Parameters
AH-05A-701	Zone I Air Handling Unit	34,000 CFM 1792 MBTUH
AH-05A-702	Zone I Air Handling Unit	34,000 CFM 1792 MBTUH
AH-05A-703	Zone I Air Handling Unit	34,000 CFM 1792 MBTUH
AH-05A-704	Zone I Air Handling Unit	34,000 CFM 1792 MBTUH
BL-05A-711	Zone I Supply Fan	34,000 CFM/75 HP
BL-05A-712	Zone I Supply Fan	34,000 CFM/75 HP
BL-05A-713	Zone I Supply Fan	34,000 CFM/75 HP
BL-05A-714	Zone I Supply Fan	34,000 CFM/75 HP
PF-05B-701	Zone I Filter Plenum	12,000 CFM
PF-05B-702	Zone I Filter Plenum	12,000 CFM
PF-05B-703	Zone I Filter Plenum	12,000 CFM
PF-05B-704	Zone I Filter Plenum	12,000 CFM
PF-05B-705	Zone I Filter Plenum	12,000 CFM
PF-05B-706	Zone I Filter Plenum	12,000 CFM
PF-05B-707	Zone I Filter Plenum	12,000 CFM
PF-05B-708	Zone I Filter Plenum	12,000 CFM
PF-05B-709	Zone I Filter Plenum	12,000 CFM
PF-05B-710	Zone I Filter Plenum	12,000 CFM
PF-05B-713	Zone I Filter Plenum	9,000 CFM
PF-05B-714	Zone I Filter Plenum	9,000 CFM
PF-05B-715	Zone I Filter Plenum	9,000 CFM

Equipment ID	Description	Design Parameters
PF-05B-716	Zone I Filter Plenum	9,000 CFM
BL-05B-721	Zone I Exhaust Fan	40,000 CFM/200 HP
BL-05B-722	Zone I Exhaust Fan	40,000 CFM/200 HP
BL-05B-723	Zone I Exhaust Fan	40,000 CFM/200 HP
BL-05B-724	Zone I Exhaust Fan	40,000 CFM/200 HP
PF-05Z-721	Analytical/Sample Cells Filter Plenum	6,000 CFM
BL-05Z-731	Analytical/Sample Cells Supply Fan	4,700 CFM/15 HP
BL-05Z-732	Analytical/Sample Cells Supply Fan	4,700 CFM/15 HP
BL-05C-721	Zone II Supply Fan	72,000 CFM/200 HP
BL-05C-722	Zone II Supply Fan	72,000 CFM/200 HP
BL-05C-723	Zone II Supply Fan	72,000 CFM/200 HP
BL-05C-724	Zone II Supply Fan	72,000 CFM/200 HP
BL-05C-725	Zone II Supply Fan	5,150 CFM/7.5 HP
BL-05C-726	Zone II Supply Fan	5,150 CFM/7.5 HP
PF-05D-701	Zone II Exhaust Filter Plenum	15,000 CFM
PF-05D-702	Zone II Exhaust Filter Plenum	15,000 CFM
PF-05D-703	Zone II Exhaust Filter Plenum	15,000 CFM
PF-05D-704	Zone II Exhaust Filter Plenum	15,000 CFM
PF-05D-705	Zone II Exhaust Filter Plenum	15,000 CFM
PF-05D-706	Zone II Exhaust Filter Plenum	15,000 CFM
PF-05D-707	Zone II Exhaust Filter Plenum	15,000 CFM
PF-05D-708	Zone II Exhaust Filter Plenum	15,000 CFM
PF-05D-709	Zone II Exhaust Filter Plenum	15,000 CFM
PF-05D-710	Zone II Exhaust Filter Plenum	15,000 CFM
PF-05D-711	Zone II Exhaust Filter Plenum	15,000 CFM
PF-05D-712	Zone II Exhaust Filter Plenum	15,000 CFM
PF-05D-713	Zone II Exhaust Filter Plenum	15,000 CFM
PF-05D-714	Zone II Exhaust Filter Plenum	15,000 CFM
PF-05D-715	Zone II Exhaust Filter Plenum	15,000 CFM
BL-05D-721	Zone II Exhaust Fan	69,000 CFM/200 HP
BL-05D-722	Zone II Exhaust Fan	69,000 CFM/200 HP
BL-05D-723	Zone II Exhaust Fan	69,000 CFM/200 HP
BL-05D-724	Zone II Exhaust Fan	69,000 CFM/200 HP
BL-05D-741	Variable Air Vol Hood Exhaust Fan	14,000 CFM/40 HP
BL-05D-742	Variable Air Vol Hood Exhaust Fan	14,000 CFM/40 HP
BL-05D-751	Constant Air Vol Hood Exhaust Fan	18,810 CFM/40 HP
BL-05D-752	Constant Air Vol Hood Exhaust Fan	18,810 CFM/40 HP
AC-05E-701	Zone III Air Conditioning Unit	12,500 CFM/30 KW
AC-05E-702	Zone III Air Conditioning Unit	12,500 CFM/30 KW
AC-05E-703	Zone III Air Conditioning Unit	4,400 CFM/12 KW
AC-05E-704	Zone III Air Conditioning Unit	4,400 CFM/12 KW
AH-05E-701	Zone III Air Handling Unit	72,000 CFM/3804 MBTUH
AH-05E-702	Zone III Air Handling Unit	72,000 CFM/3804 MBTUH
AH-05E-703	Zone III Air Handling Unit	72,000 CFM/3804 MBTUH
AH-05E-704	Zone III Air Handling Unit	72,000 CFM/3804 MBTUH
BL-05E-721	Zone III Supply Fan	72,000 CFM/150 HP
BL-05E-722	Zone III Supply Fan	72,000 CFM/150 HP
BL-05E-723	Zone III Supply Fan	72,000 CFM/150 HP

Equipment ID	Description	Design Parameters
BL-05E-724	Zone III Supply Fan	72,000 CFM/150 HP
PF-05F-701	Zone III Exhaust Filter Plenum	15,000 CFM
PF-05F-702	Zone III Exhaust Filter Plenum	15,000 CFM
PF-05F-703	Zone III Exhaust Filter Plenum	15,000 CFM
PF-05F-704	Zone III Exhaust Filter Plenum	15,000 CFM
PF-05F-705	Zone III Exhaust Filter Plenum	15,000 CFM
PF-05F-706	Zone III Exhaust Filter Plenum	15,000 CFM
PF-05F-707	Zone III Exhaust Filter Plenum	15,000 CFM
PF-05F-708	Zone III Exhaust Filter Plenum	15,000 CFM
PF-05F-709	Zone III Exhaust Filter Plenum	15,000 CFM
PF-05F-710	Zone III Exhaust Filter Plenum	15,000 CFM
PF-05F-711	Zone III Exhaust Filter Plenum	15,000 CFM
PF-05F-712	Zone III Exhaust Filter Plenum	15,000 CFM
PF-05F-713	Zone III Exhaust Filter Plenum	15,000 CFM
PF-05F-714	Zone III Exhaust Filter Plenum	15,000 CFM
PF-05F-715	Zone III Exhaust Filter Plenum	15,000 CFM
AC-05G-709	Zone IV Air Conditioning Unit	2,200 CFM/7.0 KW
AC-05G-710	Zone IV Air Conditioning Unit	2,200 CFM/7.0 KW
AC-05G-711	Zone IV Air Conditioning Unit	2,200 CFM/7.0 KW
AC-05G-712	Zone IV Air Conditioning Unit	2,200 CFM/7.0 KW
AH-05G-701	Zone IV Air Handling Unit	75,000 CFM/100 KW
AH-05G-702	Zone IV Air Handling Unit	75,000 CFM/100 KW
BL-05G-701	Zone IV Supply Fan	75,000 CFM/75 HP
BL-05G-702	Zone IV Supply Fan	75,000 CFM/75 HP
AH-05G-703	Zone IV Air Handling Unit	6,000 CFM/10 KW
AH-05G-704	Zone IV Air Handling Unit	6,000 CFM/10 KW
BL-05G-703	Zone IV Supply Fan	6,000 CFM/10 HP
BL-05G-704	Zone IV Supply Fan	6,000 CFM/10 HP
BL-05G-705	Zone IV Supply Fan	2,500 CFM/7.5 HP
BL-05G-706	Zone IV Supply Fan	2,500 CFM/7.5 HP
BL-05G-707	Zone IV Exhaust Fan	1,000 CFM/5 HP
BL-05G-708	Zone IV Exhaust Fan	1,000 CFM/5 HP
BL-05G-709	Zone IV Exhaust Fan	1,000 CFM/5 HP
BL-05G-710	Zone IV Exhaust Fan	1,000 CFM/5 HP
BL-05G-711	Zone IV Exhaust Fan	1,000 CFM/5 HP
BL-05G-712	Zone IV Exhaust Fan	1,000 CFM/5 HP

6.7.6 PROCESS CONSIDERATIONS

6.7.6.1 Utilities and Chemicals

The system utility requirements are summarized below:

a) Instrument Air (IAX):Used for pneumatic control components

b) Sanitary Water (SWX):Used for makeup water requirements

c) Firewater (FWX): Used for exhaust filter plenum fire protection (sprinklers) as required

d) Clean Drain (DRX): Used for draining cooling coil condensate and hydronic system maintenance

6.7.6.2 Materials, Fabrication and Construction Requirements

Materials, Fabrication and Construction requirements for utility and interface systems will be in accordance with the following sections:

Section 4.0 Architectural Design Basis
Section 5.0 Electrical Design Basis
Section 7.0 Instrumentation and Control Design Basis
Section 8.0 Mechanical Design Basis
Section 9.0 Piping Design Basis
Section 10.0 Structural/Civil Design Basis
Section 11.0 Fire Protection and Detection Design Basis

Materials, Fabrication and Construction requirements for the HVAC components will be in accordance with the Equipment Data Sheets and the Specifications listed in Attachment A.

6.7.6.3 HVAC Control

The HVAC controls for the Vitrification Building are shown on the HVAC Flow and Control Diagrams listed in Section 6.7.1. The HVAC controls are described in detail in the Vitrification Building HVAC System PCD No. DS-05A.

6.7.6.4 Equipment Arrangement

HVAC Equipment and components are shown on the General Arrangement Drawings and HVAC drawings listed in Section 6.7.1.

6.7.7 SAFETY REQUIREMENTS

The safety classification rationale for the Vitrification Building HVAC Systems are described in Section 2.5 of the PDG.

6.7.8 RELIABILITY AND MAINTENANCE

All HVAC components will be designed for a 20-year life, where practical. Redundancy and spare capacity will be provided for the various HVAC subsystems in the Vitrification Building to ensure adequate ventilation during normal operations and DBA conditions. In case of equipment replacement or maintenance, the redundant or spare equipment will be started to maintain the design conditions stated in Section 6.4.2.1.

The Vitrification Building HVAC System availability target is 0.9994. Reliability, availability and maintenance target values are described in Section 2.6 of the PDG.

6.7.9 ENVIRONMENTAL CONSIDERATIONS

The Vitrification Building HVAC System will be designed to meet the environmental compliance items regarding monitoring of the gaseous effluents in the exhaust air. The exhaust air will be continuously monitored at the Zone I and Zone II Exhaust Stacks to ensure compliance with the Effluent Control Guidelines as specified in DOE 6430.1A, Section 1300-1.4.

6.7.10 IMPACT LEVEL

The Zone I Exhaust Equipment, the Zone and the Zone I Backflow Prevention Components are designated as impact Level 2 items. The other HVAC equipment will be designated as impact Level 3 item.

6.7.11 WASTE FORM QUALIFICATION DESIGN REQUIREMENTS

WAPS is not applicable to the vitrification building HVAC systems.

6.8 CANISTER STORAGE BUILDING HVAC SYSTEM (SYSTEM 05I AND 05J)

The Canister Storage Building HVAC System (System 05I and 05J) provides an integrated HVAC System Design for the entire building.

6.8.1 REFERENCE DRAWINGS

The Canister Storage Building HVAC System is shown on the HVAC Flow and Control Diagrams, General Arrangement Drawings, and HVAC Layout Drawings. Pertinent drawings are listed below:

6.8.1.1 HVAC Flow and Control Diagrams

Drawing No.	Title
H-2-129881 Sheet 1	Canister Storage Building Operating Area
H-2-129881 Sheet 2	Canister Storage Building Operating Area
H-2-129881 Sheet 3	Canister Storage Building Operating Area Offices
H-2-129882	Canister Storage Building Canister Storage Area
H-2-129883 Sheet 1	Canister Storage Building Canister Storage Exhaust
H-2-129883 Sheet 2	Canister Storage Building Canister Storage Exhaust
H-2-129883 Sheet 3	Canister Storage Building Canister Storage Exhaust
H-2-129883 Sheet 4	Canister Storage Building Canister Storage Exhaust
H-2-129884	Canister Storage Building HVAC Equipment Room
H-2-129885	Canister Storage Building Exhaust Stack
H-2-129942	Canister Storage Building Atmospheric Reference Pressure Header

6.8.1.2 General Arrangement Drawings

Drawing No.	Title
H-2-118080	Canister Storage Building Basement Plan
H-2-118081	Canister Storage Building First Floor Plan
H-2-118082	Canister Storage Building Roof Plan
H-2-118083	Canister Storage Building Section
H-2-118084	Canister Storage Building Sections
H-2-118085	Canister Storage Building North and South Elevations

6.8.1.3 HVAC Layout Drawings

Drawing No.	Title
H-2-129240	HVAC Basement Plan
H-2-129241	HVAC First Floor Plan
H-2-129242	HVAC Roof Plan
H-2-129243	HVAC Sections
H-2-129244	HVAC Sections

6.8.2 FUNCTION DESIGN CRITERIA (FDC) DOCUMENT

The following sections of the FDC Document are applicable to the Canister Storage Building HVAC System:

FDC Section	Title
1.3.5.3	Contamination Control
2.2.12	Canister Storage
4.1.13	Energy Conservation
4.2	Heating, Ventilation, and Air Conditioning

6.8.3 TECHNICAL DATA PACKAGE (TDP) DOCUMENT

The following sections of the TDP Document are applicable to the Canister Storage Building HVAC System:

Section	Item	Title
5	500	Canister Storage Building
5	800	Exhaust Stack
7	300	Interim Canister Storage Building

6.8.4 ASSUMPTIONS AND REFERENCES

6.8.4.1 Assumptions

a) Minimum ventilation rate in the operating area will be two air changes per hour.

Basis: The internal heat load of the operating area is small and the room volume is large. This rate is sufficient to maintain the inside design conditions stated in Section 6.4.2.

b) The Zone II Canister Storage Vault Exhaust System is designed to operate during, and after, a DBA.

The remainder of the Canister Storage Building HVAC Systems are not designed to operate during, and after, a DBA.

Basis: The HVAC System Design shall be compatible with the Structural Basis for Design of the vault enclosures as defined in TDP Section 5, Item 500.

6.8.4.2 References

a) TDP, Section 5, Item 500.

6.8.5 SYSTEM DESCRIPTION

6.8.5.1 Functional Requirements

The Canister Storage Building HVAC System consists of four subsystems which are shown on HVAC Flow and Control Diagrams H-2-129881, H-2-129882, H-2-129883, and H-2-129884. The following functions are performed by the Canister Storage Building HVAC subsystems:

- Operating area heating and ventilation system maintains the required temperature and ventilation for Room 110.
- Operating area offices HVAC system maintains the required temperature and ventilation for Rooms 100, 102, 104, 106, and 108.
- Canister storage area HVAC system maintains the required temperature and ventilation for Canister Storage Vaults 1 and 2.
- HVAC Equipment Room HVAC system maintains the required temperature and ventilation for Room 112.

6.8.5.2 System Interfaces

a) Normal and Standby Electrical Distribution Systems (System 32 and 33) - provide normal and standby power to heating and ventilation system components

b) Compressed Air System (System 41) - provides instrument air for pneumatic control components

c) Sanitary Water and Fire Water System (System 49) - provides a source of clean water to humidifiers and evaporative coolers

d) Non-Radioactive Liquid Waste System (System 53) - receives discharge from evaporator cooler flush and discharges via floor drains.

6.8.5.3 Process Description

6.8.5.3.1 The Canister Storage Building HVAC System General Requirements are listed below:

a) The following area has been designated as Zone II

- Canister Storage Vault.

b) The following areas have been designated as Zone III

- Operating Area
- HVAC Equipment Room

c) The remainder of the building is designated as Zone IV and will be maintained at slightly above atmospheric pressure.

d) The Zone II exhaust will be continuously filtered by two stages of HEPA filters before release to the atmosphere via the building stack.

e) The Zone III HEPA standby filter plenum will be manually brought on-line during canister handling operations, or automatically aligned by high radiation signals, to maintain the operations area at less than atmospheric pressure.

6.8.5.3.2 The operating area is ventilated by four Exhaust Fans (BL-05J-702 through 705). Outside air is drawn through wall louvers and the Filter Sections (FL-05I-001 and 002). Four electric Unit Heaters (UH-05I-701 through 704) provide the necessary heating.

6.8.5.3.3 Filter Plenum (PF-05J-701) and Exhaust Fan (BL-05J-701) exhaust air from the operating area to the Canister Storage Building Stack in the event of high radiation alarm from the HPCS.

6.8.5.3.4 The operating area offices are supplied by one 100% capacity Air Handling Unit (AH-05I-704) consisting of a Pre-Filter Section, DX Cooling Coil (CO-05I-704), Condensing Unit (CU-05I-704), and Supply Fan (BL-05I-704).

6.8.5.3.5 The canister storage vaults are supplied by two 50% capacity, once-through type, Air Handling Units (AH-05I-701 and 702). Each air handling unit consists of an inlet plenum, Pre-filter, High Efficiency Filter, Electric Heating Coil (HG-05I-701 and 702),

Evaporative Cooler (EC-05I-701 and 702) and Supply Fan (BL-05I-701 and 702).

6.8.5.3.6 The ventilation air is exhausted from the canister storage vaults through eight Filter Plenums (PF-05J-710 through 718) to the Canister Storage Building Stack by two of four 50% Exhaust Fans (BL-05J-721, 722, 723 and 724).

6.8.5.3.7 The HVAC Equipment Room is supplied by one (1) 100% capacity Air Handling Unit (AH-05I-703) consisting of a mixing box section, Prefilter, Electric Heating Coil (HG-05I-703), Evaporative Cooler (EC-05I-703) and Supply Fan (BL-05I-703).

6.8.5.3.8 The room air from the HVAC Equipment Room is exhausted through the wall louvers.

6.8.5.3.9 A detail system operation narrative for the Canister Storage Building HVAC is provided in the Miscellaneous Building HVAC Systems Process Control Description (PCD) DS-05J, Sections 2 through 9.

6.8.5.4 Equipment Description

The major HVAC components for the Canister Storage Building are listed in Subsection 6.8.5.4-1. A complete list of all components is provided in the Miscellaneous Building PCD DS-05J.

Table 6.8.5.4-1

CANISTER STORAGE BUILDING HVAC COMPONENTS

Equipment ID	Description	Design Parameters
AH-05I-701	Air Handling Unit	37,300 CFM/75 HP
AH-05I-702	Air Handling Unit	37,300 CFM/75 HP
AH-05I-703	Air Handling Unit	21,000 CFM/40 HP
AH-05I-704	Air Handling Unit	2,800 CFM/3 HP
BL-05J-701	Exhaust Fan	3,100 CFM/15 HP
BL-05J-702	Roof Ventilators	8,000 CFM/15 HP
BL-05J-703	Roof Ventilators	8,000 CFM/15 HP
BL-05J-704	Roof Ventilators	8,000 CFM/15 HP
BL-05J-705	Roof Ventilators	8,000 CFM/15 HP
BL-05J-721	Exhaust Fan	42,500 CFM/150 HP
BL-05J-722	Exhaust Fan	42,500 CFM/150 HP
BL-05J-723	Exhaust Fan	42,500 CFM/150 HP
BL-05J-724	Exhaust Fan	42,500 CFM/150 HP
CU-05I-704	Condensing Unit	71 MBTUH
PF-05J-701	Exhaust Filter Plenum	3,000 CFM
PF-05J-711	Exhaust Filter Plenum	12,000 CFM
PF-05J-712	Exhaust Filter Plenum	12,000 CFM
PF-05J-713	Exhaust Filter Plenum	12,000 CFM
PF-05J-714	Exhaust Filter Plenum	12,000 CFM
PF-05J-715	Exhaust Filter Plenum	12,000 CFM
PF-05J-716	Exhaust Filter Plenum	12,000 CFM
PF-05J-717	Exhaust Filter Plenum	12,000 CFM
PF-05J-718	Exhaust Filter Plenum	12,000 CFM
AH-05J-705	Emergency Air Handling Unit	5,000 CFM/5 HP
AH-05J-706	Emergency Air Handling Unit	5,000 CFM/5 HP

6.8.6 PROCESS CONSIDERATION

6.8.6.1 Utilities and Chemicals

The System Utility requirements are summarized below:

a) Instrument Air (IAX): Used for pneumatic control components

b) Sanitary Water (SWX): Used for makeup water requirements

c) Firewater (FWX): Used for exhaust filter plenum fire protection (sprinklers) as required

d) Clean Drain (DRX): Used for draining cooling coil condensate and hydronic system maintenance

6.8.6.2 Materials, Fabrication and Construction Requirements

Materials, Fabrication and Construction requirements for utility and interface systems will be as specified in the following sections:

Section 4.0 Architectural Design Basis
Section 5.0 Electrical Design Basis
Section 7.0 Instrumentation and Control Design Basis
Section 8.0 Mechanical Design Basis
Section 9.0 Piping Design Basis
Section 10.0 Structural/Civil Design Basis
Section 11.0 Fire Protection and Detection Design Basis

Materials, Fabrication and Construction requirements for the HVAC components will be in accordance with the Equipment Data Sheets and the Specifications listed in Attachment A.

6.8.6.3 HVAC Control

The HVAC controls for the Canister Storage Building are shown on the HVAC Flow and Control Diagrams listed in Subsection 6.8.1. The HVAC controls are described in detail in the Miscellaneous Building HVAC System PCD No. DS-05J, Sections 2 through 9.

6.8.6.4 Equipment Arrangement

HVAC Equipment and components are shown on the General Arrangement Drawings and HVAC Layout Drawings listed in Subsection 6.8.1.

6.8.7 SAFETY REQUIREMENTS

The safety classification rational for the Canister Storage Building HVAC System is described in Section 2.5 of the PDG.

6.8.8 RELIABILITY AND MAINTENANCE

6.8.8.1 Reliability

All HVAC components will be designed for a 20-year life, where practical. Redundancy and/or spare capacity will be provided for the various HVAC subsystems in the Canister Storage Building to ensure adequate ventilation during normal operations and DBA conditions. In case of equipment replacement or maintenance, the redundant or spare equipment will be used to maintain the inside design conditions stated in Subsection 6.4.2.1.

The HVAC system availability rating is 0.9998 for the Canister Storage Building. The availability requirements for the facility design are described in Section 2.6.

6.8.8.2 Maintenance Requirements

The following general maintenance requirements are included in the Canister Storage Building HVAC System Design:

- Maintenance requirements will be provided in accordance with the applicable Hanford design criteria. Equipment should be accessible from either permanently mounted platforms or ladders.
- All floor-mounted HVAC equipment will be mounted on housekeeping pads. Pads should be a minimum of six inches high.
- All grease fittings will be reachable from floor or platform.
- No fan belts will be located in contaminated or potentially contaminated air streams.
- Fill and drain systems will be permanently attached to the equipment. Instrumentation on the fill system will be provided so that makeup can be measured.

6.8.9 ENVIRONMENTAL CONSIDERATIONS

The Canister Storage Building HVAC System will be designed to meet the environmental items regarding monitoring of the gaseous effluents in the exhaust air. The Canister Storage Vault exhaust air will be continuously monitored at the exhaust stack to ensure compliance with the Effluent Control Guidelines specified in DOE 6430.1A, Section 1300-1.4.

6.8.10 IMPACT LEVEL

The canister storage vault exhaust system is designated as an Impact Level 2 item. The canister storage vault supply system, the operating area ventilation system, and the operating area standby exhaust system are designated as Impact Level 3 item. The equipment room HVAC system is an Impact Level 4 item.

6.8.11 WASTE FORM QUALIFICATION DESIGN REQUIREMENTS

WAPS is not applicable to the canister storage building HVAC systems.

6.9 <u>OPERATIONS CONTROL/REGULATED ENTRANCE BUILDING HVAC SYSTEMS (SYSTEMS 05K, 05L, 05M, AND 05N)</u>

The Operations Control/Regulated entrance Building (OC/REB) HVAC System (System 05K through 05N) provides an integrated HVAC system design for the Operations Control Building, Regulated Entrance Facility (Zone IV Areas), and the Control and Computer Rooms.

6.9.1 REFERENCE DRAWINGS

The OC/REB HVAC system is shown on the HVAC Flow and Control diagrams, General Arrangement Drawings, and HVAC Layout Drawings. Pertinent drawings are listed below.

6.9.1.1 HVAC Flow and Control Diagrams

Drawing No.	Title
H-2-129861 Sheet 1	OC/REB Office & Operation Areas
H-2-129861 Sheet 2	OC/REB Office & Operations Areas
H-2-129862 Sheet 1	OC/REB Control/Computer Rooms
H-2-129862 Sheet 2	OC/REB Control/Computer Rooms
H-2-129862 Sheet 3	OC/REB Control/Computer Rooms
H-2-129863	OC/REB HVAC Equipment Room

6.9.1.2 General Arrangement Drawings

Drawing No.	Title
H-2-118140	OC/REB First Floor Plan - West End
H-2-118141	OC/REB First Floor Plan - East End
H-2-118142	OC/REB Roof Plan
H-2-118143	OC/REB Sections
H-2-118144	OC/REB Exterior Elevation
H-2-118160	OC/REB Facility Floor Plan
H-2-118161	OC/REB Facility Roof Plan
H-2-118162	OC/REB Facility Sections
H-2-118163	OC/REB Facility Elevations

6.9.1.3 HVAC Layout Drawings

Drawing No.	Title
H-2-129210	HVAC Floor Plan - West
H-2-129211	HVAC Floor Plan - East
H-2-129212	HVAC Mezzanine & Roof Plans
H-2-129213	HVAC Sections
H-2-129214	HVAC Sections

6.9.2 FUNCTIONAL DESIGN CRITERIA (FDC) DOCUMENT

The following sections of the FDC document are applicable to the Operations Control Building HVAC System:

FDC Section	Title
4.1.13	Energy Conservation
4.2	Heating, Ventilation and Air Conditioning

6.9.3 TECHNICAL DATA PACKAGE (TDP) DOCUMENT

The following sections of the TDP document are applicable to the Operations Control Building HVAC System:

Section	Item No.	Title
5	310	Operations Control Building
5	320	Regulated Entrance Facility

6.9.4 ASSUMPTIONS AND REFERENCES

6.9.4.1 Assumptions

a) Supply air ventilation rates will be determined by the room heat loads.

Basis: HPS-SDC-5.1

b) There is no potential for radioactive contamination of the OC/REB; therefore, no radioactive contamination control features are incorporated in the design of the HVAC Systems.

Basis: There are no sources of radiation in the OC/REB.

c) The OC/REB HVAC System is not designed to operate during, and after, a DBA.

Basis: The OC/REB HVAC System is not required to support safe shutdown of the facility.

6.9.4.2 References

a) Hanford Plant Standard, SDC-5.1, Revision 6.

6.9.5 SYSTEM DESCRIPTION

6.9.5.1 Functional Requirements

6.9.5.1.1 The OC/REB HVAC System performs the following functions:

- Maintain temperature and ventilation in the Operations Control Building.
- Maintain temperature and ventilation in the Regulated Entrance Facility.
- Maintain temperature, humidity, and ventilation in the Control and Computer Rooms.
- Maintain positive pressure with respect to the atmosphere.

6.9.5.1.2 The OC/REB is designated as a Zone IV area and will be maintained at a pressure slightly above atmospheric pressure.

6.9.5.1.3 Independent exhaust system will be provided for exhaust of the toilet and locker areas.

6.9.5.1.4 The Control Room and Computer Room HVAC System will operate from the CCR. The system will be designed to operate continuously, as described below:

- Normal operations, start-up sequence - the operator starts one air handling unit and one air conditioning unit from a local panel.

- Area pressure control - the Control Room and Computer Room areas are maintained slightly above atmospheric pressure by manual balancing of the outside air quantity introduced into the system. The pressurization air is allowed to leak into adjacent areas.

- Temperature control - the supply air handling units are maintained at a constant level by regulation of chilled water through the cooling coils. Electric reheat coils in the supply ducts to the individual rooms are controlled to maintain set temperatures in the associated areas.

- Humidity control - the humidity is controlled by the maintenance of a constant air temperature in the air supplied from the handling units and the introduction of moisture into the supply airstream as required.

6.9.5.2 System Interfaces

The interfaces between the HVAC Systems and other plant systems are described below:

a) Central Refrigeration Systems (System 03A) - provides chilled water to cooling coils.

b) Normal Electrical Distribution System (System 32) - provides electrical power to heating and ventilation system components.

c) Compressed Air System (System 41) - provides instrument air for pneumatic control components.

d) Sanitary Water System (System 49) - provides a source of clean water to humidifiers and evaporative coolers.

e) Non-Radioactive Liquid Waste Handling System (System 53) - receives discharge from cooling coil condensate, humidifier flush, and evaporative cooler flush via drains.

f) Distributed Control System (System 61) - provides control of ventilation systems.

6.9.5.3 Process Description

6.9.5.3.1 OC/REB Zone IV HVAC Systems (Systems 05K and 05L)

The OC/REB office area Air Handling Unit (AH-05K-703) operates with Return/Exhaust Fan (BL-05L-704).

Air supplied into the building consists of mixed outside air and return air and is drawn by one 100% Air Handling Unit. The Air Handling Unit consists of a Pre-filter, High Efficiency Filter, Cooling Coil (CO-05K-703) and Supply Fan (BL-05K-703).

Room air is returned or exhausted by the Return/Exhaust Fan (BL-05L-704).

Room air from lunch room, blues areas, and women's and men's toilet and change rooms areas in the OC/REB is exhausted into the atmosphere by Exhaust Fan BL-05L-705.

6.9.5.3.2 OC/REB Control/Computer Room HVAC Systems (Systems 05M and 05N)

Supply air to the Control/Computer Room is provided by one of the two 100% Air Handling Units (AH-05M-701 and 702). One is operating, and the other is standby. Each Air Handling Unit consists of a Pre-filter high efficiency filter, Cooling Coil (CO-05M-701A and 701B), and Supply Fan (BL-05M-701A and 701B).

6.9.5.3.3 A detail system operation narrative for the OC/REB HVAC System is provided in the Miscellaneous Building HVAC Systems Process Control Description (PCD) DS-05J, Sections 12 through 19.

6.9.5.4 Equipment Description

The major HVAC components for the OC/REB are listed in Table 6.9.5.4-1. A complete list of all components is provided in the Miscellaneous Building HVAC Systems PCD DS-05J.

6.9.6 PROCESS CONSIDERATION

6.9.6.1 Utilities and Chemicals

The system utility requirements are summarized below:

a) Instrument Air (IAX): Used for pneumatic control components
b) Sanitary Water (SWX): Used for Makeup water requirements)
c) Clean Drain (DRX): Used for draining cooling coil condensate and hydronic system maintenance

6.9.6.2 Materials, Fabrication and Construction Requirements

Materials, Fabrication and Construction requirements for utility and interface systems will be as specified in the following sections:

Section 4.0 Architectural Design Basis
Section 5.0 Electrical Design Basis
Section 7.0 Instrumentation and Control Design Basis
Section 8.0 Mechanical Design Basis
Section 9.0 Piping Design Basis
Section 10.0 Structural/Civil Design Basis
Section 11.0 Fire Protection and Detection Design Basis

Materials, Fabrication and Construction requirements for the HVAC components will be in accordance with the equipment data sheets and the specifications listed in Attachment A.

Table 6.9.5.4-1
OC/REB HVAC Components

Equipment ID	Description	Design Parameters
AC-05M-701A	Air Conditioning Unit	152 MBTUH
AH-05M-701	Air Handling Unit	8,190 CFM/235 MBTUH, 15 HP
AC-05M-701B	Air Conditioning Unit	152 MBTUH
AH-05M-702	Air Handling Unit	8,190 CFM/235 MBTUH, 15 HP
AH-05K-703	Air Handling Unit	19,040 CFM/728 MBTUH, 25 HP
BL-05L-704	Return/Exhaust Fan	10,090 CFM/7.5 HP
AH-05K-705	Air Handling Unit	4,000 CFM/5 HP
BL-05L-705	Exhaust Fan	9,230 CFM/5 HP
PF-05K-701	HEPA Filter Plenum	1,000 CFM

6.9.6.3 HVAC Control

The HVAC controls for the OC/REB are shown on the HVAC Flow and Control Diagrams listed in Subsection 6.9.1. The HVAC controls are described in detail in the Miscellaneous Building HVAC Systems PCD No. DS-05J.

6.9.6.4 Equipment Arrangement

HVAC equipment and components are shown on the General Arrangement Drawings and HVAC Layout Drawings listed in Subsection 6.9.1.

6.9.7 SAFETY REQUIREMENTS

The safety classification rationale for the OC/REB HVAC System is described in Section 2.5 of the PDG.

6.9.8 RELIABILITY AND MAINTENANCE

6.9.8.1 Reliability

All HVAC components will be designed for a 20-year life, where practical. Supply air to the Control/Computer Room is provided by two 100% redundant air handling units. Two 100% redundant air conditioning units will be provided for the backup computer room.

The OC/REB HVAC Systems are not required for melter production, thus, the OC/REB HVAC Systems are not included in the RAM analysis for system availability as described in Section 2.6 of the PDG.

6.9.8.2 Maintenance Requirements

The following general maintenance requirements are included in the OC/REB HVAC System design.

- Maintenance requirements will be provided in accordance with the applicable Hanford design criteria. Equipment should be accessible from either permanently mounted platforms or ladders.
- All floor-mounted HVAC equipment will be mounted on housekeeping pads. Pads should be a minimum of six inches high.
- All grease fittings will be reachable from floor or platform.
- Fill and drain systems will be permanently attached to the equipment. Instrumentation on the fill system will be provided so that makeup can be measured.

6.9.9 ENVIRONMENTAL CONSIDERATIONS

The OC/REB HVAC System will have no significant potential impact on the environment.

6.9.10 IMPACT LEVEL

The supply air inlet and associated ductwork to the CCR is designated as an Impact Level 3 item. The remaining OC/REB HVAC systems are designated as Impact Level 4 items.

6.9.11 WASTE FORM QUALIFICATION DESIGN REQUIREMENTS

WAPS is not applicable to the OC/REB HVAC systems.

6.10 MANIPULATOR REPAIR BUILDING HVAC SYSTEMS (SYSTEMS 05P AND 05Q)

The Manipulator Repair Building HVAC Systems (Systems 05P and 05Q) provides an integrated HVAC System design for the Manipulator Repair Building.

6.10.1 REFERENCE DRAWINGS

The Manipulator Repair Building HVAC Systems are shown on the HVAC Flow and Control Diagrams, General Arrangement Drawings, and the HVAC Layout Drawings. Pertinent drawings are listed below.

6.10.1.1 HVAC Flow and Control Diagrams

Drawing No.	Title
H-2-129851	Manipulator Repair Building Zone II & III Supply
H-2-129852	Manipulator Repair Building Zone II & III Supply and Exhaust
H-2-129853 Sheet 1	Manipulator Repair Building Zone II & III Exhaust
H-2-129853 Sheet 2	Manipulator Repair Building Zone II & III Exhaust
H-2-129853 Sheet 3	Manipulator Repair Building Zone II & III Exhaust
H-2-129853 Sheet 4	Manipulator Repair Building Zone II & III Exhaust
H-2-129854	Manipulator Repair Building HVAC Equipment Room
H-2-129941	Manipulator Repair Building Atmosphere Reference Pressure Header

6.10.1.2 General Arrangement Drawings

Drawing No.	Title
H-2-118070	Manipulator Repair Building - First Floor Plan
H-2-118071	Manipulator Repair Building - Second Floor Plan
H-2-118072	Manipulator Repair Building - Elevation & Sections

6.10.1.3 HVAC Layout Drawings

Drawing No.	Title
H-2-129200	HVAC First Floor Plan
H-2-129201	HVAC Second Floor Plan
H-2-129202	HVAC Mechanical Room
H-2-129203	HVAC Roof Plan
H-2-129204	HVAC Sections
H-2-129205	HVAC Section

6.10.2 FUNCTIONAL DESIGN CRITERIA (FDC) DOCUMENT

The following sections of the FDC document are applicable to the Manipulator Repair Building HVAC Systems:

FDC Section	Title
1.3.5.3	Contamination Control
2.4	Decommissioning
4.1.13	Energy Conservation
4.2	Heating, Ventilation and Air Conditioning

6.10.3 TECHNICAL DATA PACKAGE (TDP) DOCUMENT

The following section of the TDP document 1) applicable to the Manipulator Repair Building HVAC Systems:

Section	Item No.	Title
15	300	Maintenance Shops

6.10.4 ASSUMPTIONS AND REFERENCES

6.10.4.1 Assumptions

a) Supply air ventilation rates will be determined by the room heat loads.

Basis: HPS-SDC-5.1

b) The Manipulator Repair Shop Zone II and Zone III Areas HVAC System will be designed to operate continuously. The operation of the exhaust fans and the supply fans will be interlocked to prevent pressurization of the Manipulator Repair Shop and associated areas.

Basis: The HVAC System design is consistent with the Zone II and Zone III HVAC Design of other buildings.

c) The Zone II areas will be supplied separately from Zone III areas. Master Slave Decontamination Room and contaminated lag storage areas are designated as Zone II. All other areas are Zone III.

Basis: The HVAC System Design is consistent with the Zone II and Zone III HVAC Design of other buildings.

6.10.4.2 References

a) Hanford Plant Standards SDC-5.1, Revision 6.

6.10.5 SYSTEM DESCRIPTION

6.10.5.1 Functional Requirements

The Manipulator Repair Building (HVAC) System supplies heated or cooled filtered air into the building. The exhaust air from the

building will be filtered through HEPA filters prior to discharge into the environment. Air locks will be provided for personnel entry from one zone to another zone. No air locks are required between Zone IV areas and the outside.

The air from the Manipulator Repair Shop and associated areas will be exhausted through two stages of HEPA filters prior to release to the environment via the Vitrification Building Zone II and Zone III stack.

The Bag-in/Bag-out type of HEPA filter plenums will be provided to prevent contamination of personnel and work space during filter changeout.

The exhaust filters can be changed without stopping the exhaust fans. The supply fan needs to be shut down temporarily for the supply air handling unit filter change. The supply and exhaust fans can be maintained without stopping the system.

The Manipulator Repair Shop Glove Boxes Exhaust System will exhaust to the Vitrification Building Zone II exhaust plenum. HEPA filters will be provided at the inlets and the outlets of the glove boxes. HEPA filters are furnished with the glove box.

6.10.5.2 System Interfaces

The Manipulator Repair Shop Glove Box Exhaust System interfaces with the following systems:

a) Normal Electrical Distribution System (System 32) - provides electrical power to the heating and ventilation system components

b) Compressed Air System (System 41) - provides instrument air for pneumatic controls

c) Distributed Control System (System 61) - provides control of the ventilation system.

The Manipulator Repair Building HVAC Equipment Room HVAC system interfaces with the following systems:

a) Central Chilled Water System (System 03A) - provides chilled water to cooling coils

b) Normal Electrical Distribution System (System 32) - provides electrical power to heating and ventilation system components

c) Compressed Air System (System 41) - provides instrument air for pneumatic controls

d) Sanitary Water System (System 49) - provides a water source for evaporative cooler.

e) Non-Radioactive Liquid Waste Handling System (System 53) - receives discharge from cooling coils condensate and evaporative cooler flush via floor drains

f) Distributed Control System (System 61) - provides control of the ventilation system

6.10.5.3 Process Description

The North and West Manipulator Repair Building HVAC System performs the following functions:

- Maintain temperature and ventilation rate in Zone II contaminated lag area as well as in the decon room.
- Maintain temperature and ventilation rate in Zone III Manipulator Repair Shop, lockers/dressing area, SOPs, office, storage, and new part assembly room.
- Maintain temperature and ventilation rate in HVAC equipment room.
- Maintain negative pressure in Zone II with respect to Zone III.
- HVAC Equipment Room (Zone IV) is maintained at positive pressure with respect to the atmosphere.
- Maintain temperature in railroad airlock/washdown area.

A detail system operation narrative for the Manipulator Repair Building HVAC Systems is provided in the Miscellaneous Building HVAC Systems Process Control Description (PCD) DS-05J, Section 22 through 29.

6.10.5.4 Equipment Description

The major HVAC components for the Manipulator Repair Building are listed in Table 6.10.5.4-1. A complete list of all components is provided in the Miscellaneous Building HVACs systems PCD DS-05J.

Table 6.10.5.4-1
Manipulator Repair Building HVAC Components

Equipment ID	Description	Design Parameters
AH-05P-701	Air Handling Uiit	27,000 CFM/30 HP
AH-05P-702	Air Handling Unit	27,000 CFM/30 HP
AH-05P-703	Air Handling Unit	10,000 CFM/7.5 HP
BL-05P-711	Supply Fan	27,000 CFM/30 HP
BL-05P-712	Supply Fan	27,000 CFM/30 HP
PF-05Q-701	Filter Plenum	6,600 CFM

PF-05Q-702	Filter Plenum	6,600 CFM
PF-05Q-703	Filter Plenum	6,600 CFM
PF-05Q-704	Filter Plenum	6,600 CFM
PF-05Q-705	Filter Plenum	5,500 CFM
PF-05Q-706	Filter Plenum	5,500 CFM
BL-05Q-711	Exhaust Fan	31,900 CFM/100 HP
BL-05Q-712	Exhaust Fan	31,900 CFM/100 HP

6.10.6 PROCESS CONSIDERATIONS

6.10.6.1 Utilities and Chemicals

The system utility requirements are summarized below:

a) Instrument Air (IAX): Used for pneumatic control components
b) Sanitary Water (SWX): Used for makeup water requirements
c) Firewater (FWX): Used for exhaust filter plenum fire protection (sprinklers)
d) Clean Drain (DRX): Used for draining cooling coil condensate and hydronic system maintenance

6.10.6.2 Materials, Fabrication and Construction Requirements

Materials, Fabrication and Construction requirements for utility and interface systems will be as specified in the following sections:

Section 4.0 Architectural Design Basis
Section 5.0 Electrical Design Basis
Section 7.0 Instrumentation and Control Design Basis
Section 8.0 Mechanical Design Basis
Section 9.0 Piping Design Basis
Section 10.0 Structural/Civil Design Basis
Section 11.0 Fire Protection and Detection Design Basis

6.10.6.3 HVAC controls for the Manipulator Repair Building are shown on the HVAC Flow and Control Diagrams listed in Subsection 6.10.1. The HVAC controls are described in detail in the Miscellaneous Building HVAC Systems PCD No. DS-05J, Sections 22 through 29.

6.10.6.4 Equipment Arrangement

HVAC equipment and components are shown on the General Arrangement Drawings and HVAC Layout Drawings listed in Section 6.10.1.

6.10.7 SAFETY REQUIREMENTS

Confinement and ALARA features are enhanced in the Manipulator Repair Building by maintaining a continuous airflow from the outside environment into the confinement zones and within the building from areas of no contamination into the confinement zones and within the building from areas of no contamination toward areas of increasing

levels of potential contamination. Such airflow is achieved by maintaining proper pressure differentials during normal operations.

The ALARA requirements are also enhanced by a design feature that allows the exhaust from areas of potential contamination in the Manipulator Repair Building to be filtered through two stages of testable HEPA filters.

The levels of potential contamination in the Manipulator Repair Building are low and such releases to the outside environment under accident conditions are judged to not exceed requirements of the DOE 6340.1A, Section 1300-1.4 "Guidance on Limiting Exposure of the Public" because the manipulators will be decontaminated before repair.

Airlocks are provided for ventilation control to allow personnel to move from one confinement zone to another confinement zone.

6.10.8 RELIABILITY AND MAINTENANCE

6.10.8.1 Reliability

All HVAC components will be designed for a 20-year life, where practical. Spare capacity and standby supply and exhaust fans will be provided for the Manipulator Repair Buildings supply and exhaust system to ensure adequate ventilation during normal operations. In case of equipment replacement or maintenance, the spare equipment or standby fan will be used to maintain the inside design conditions stated in Subsection 6.4.2.1.

The Manipulator Repair Buildings HVAC Systems are not required for melter production; thus, the Manipulator Repair Buildings HVAC Systems are not included in the RAM analysis for system availability as described in Section 2.6.

6.10.8.2 Maintenance Requirements

The following general maintenance requirements are included in the HVAC system design:

- Maintenance requirements will be provided in accordance with the applicable Hanford design criteria. Equipment should be accessible from either permanently mounted platforms or ladders.
- All floor-mounted HVAC equipment will be mounted on housekeeping pads. Pads should be a minimum of six inches high.
- All great fittings will be reachable from floor or platform.
- No fan belts will be located in contaminated or potentially contaminated air streams.

- Fill and drain systems will be permanently attached to the equipment. Instrumentation on the fill system will be provided so that makeup can be measured.

6.10.9 ENVIRONMENTAL CONSIDERATIONS

The Manipulator Repair Building exhaust air will be exhausted to the Vitrification Building Zone II exhaust stack. This stack will be continuously monitored to ensure compliance with the effluent control guidelines specified in DOE 6430.1A, Section 1300-1.4.

6.10.10 IMPACT LEVEL

The manipulator repair building HVAC systems are designated as Impact Level 3 items.

6.10.11 WASTE FORM QUALIFICATION DESIGN REQUIREMENTS

WAPS is not applicable to the manipulator repair building.

6.11 MECHANICAL/ELECTRICAL BUILDING HVAC SYSTEMS (SYSTEMS 05R AND 05S)

The Service Building HVAC Systems (05R and 05S) provides an integrated HVAC System design for the entire building.

6.11.1 REFERENCE DRAWINGS

The Service Building HVAC Systems are shown on the HVAC Flow and Control Diagrams, General Arrangement Drawings, and the HVAC Layout Drawings. Pertinent drawings are listed below.

6.11.1.1 HVAC Flow and Control Diagrams

Drawing No.	Title
H-2-129871	Frit Storage/Cold Chemical Building
H-2-129873	Mechanical/Electrical Services Building Office area.
H-2-129874	Mechanical/Electrical Services Building Shop and Equipment Room Areas.

6.11.1.2 General Arrangement Drawings

Drawing No.	Title
H-2-118120	Mechanical/Electrical Building First Floor Plan - North End
H-2-118121	Mechanical/Electrical Building First Floor Plan - Center Section

Drawing No.	Title
H-2-118122	Mechanical/Electrical Building First Floor Plan - South End
H-2-118123	Mechanical/Electrical Building Roof Plan - North End
H-2-118124	Mechanical/Electrical Building Roof Plan - Center Section
H-2-118125	Mechanical/Electrical Building Roof Plan - South End
H-2-118126	Mechanical/Electrical Building Misc. Floor Plans
H-2-118127	Mechanical/Electrical Building-Building Sections Longitudinal
H-2-118128	Mechanical/Electrical Building-Building Section Transverse
H-2-118129	Mechanical/Electrical Building North Elevation
H-2-118130	Mechanical/Electrical Building West Elevation

6.11.1.3 HVAC Layout Drawings

Drawing No.	Title
H-2-129220	HVAC First Floor Plan - North End
H-2-129221	HVAC First Floor Plan - Center Section
H-2-129222	HVAC First Floor Plan - South End
H-2-129223	HVAC Roof Plan - North End
H-2-129224	HVAC Roof Plan - Center Section
H-2-129225	HVAC Roof Plan - South End
H-2-129226	HVAC Mezzanine Plan
H-2-129227	HVAC Sections
H-2-129228	HVAC Sections

6.11.2 FUNCTIONAL DESIGN CRITERIA (FDC) DOCUMENT

The following sections of the FDC document are applicable to the Service Building HVAC Systems:

FDC Section	Title
4.1.13	Energy Conservation
4.2	Heating, Ventilation, and Air Conditioning

6.11.3 TECHNICAL DATA PACKAGE (TDP) DOCUMENT

The following sections of the TDP are applicable to the Service Building HVAC System:

Section	Item	Title
4	300	Service Building
7	200	Heating, Ventilation, and Air Conditioning

6.11.4 ASSUMPTIONS AND REFERENCES

6.11.4.1 Assumptions

a) Supply air ventilation rates are determined by room heat loads.

Basis: HPS-SDC-5.1

b) There is no potential for radioactive contamination in the Service Building; therefore, no provision will be made for radioactivity control.

Basis: There is no source of radioactivity in the Service Building.

6.11.4.2 References

a) Hanford Plant Standard, SDC-5.1, Revision 6

6.11.5 SYSTEM DESCRIPTION

6.11.5.1 Functional Requirements

The following functions are performed by the Service Building HVAC subsystems:

- Chemical Storage Area HVAC Systems maintain the required temperature and ventilation.
- Analytical Lab HVAC System maintains the required temperature and ventilation.
- Maintenance and Canister Inspection Areas HVAC System maintains the required temperature and ventilation.
- Equipment Rooms HVAC System maintains the required temperature and ventilation.
- Offices and Local Operating Station HVAC System maintains the required temperature and ventilation.

The Building has been designated as a Zone IV area. The entire building will be maintained at slightly above atmospheric pressure.

6.11.5.2 System Interfaces

The interfaces between the Service Building HVAC System and other systems are described below:

a) Central Chilled Water (System 03A) - provides chilled water to cooling coils

b) Compressed Air and Gas System (System 14) - provides instrument air for pneumatic control components

c) Normal Electrical Distribution System (System 32) - provides electrical power to heating and ventilation system components

d) Sanitary Water (System 49) - provides clean water for humidifiers and evaporative coolers

e) Non-Radioactive Liquid Waste Handling System (System 53) - receives discharge from cooling coil condensate and evaporative cooler flush

f) Distribution Control System (System 61) - provides control of ventilation system

6.11.5.3 Process Description

6.11.5.3.1 Chemical Storage Areas

Chemical Storage Areas are supplied by one 100% capacity, once-through type Air Handling Unit (AH-05R-704), consisting of pre-filter section, Electric Heating Coil (HG-05R-704), Evaporative Cooler (EC-05R-704), and Supply Fan (BL-05R-704).

The ventilation air is exhausted from the Chemical Storage Areas by Exhaust Fans (BL-05S-704 through 707) through backdraft dampers to the atmosphere.

6.11.5.3.2 Analytical Laboratory

The analytical laboratory is serviced by one 100% Air Handling Unit (AH-05R-705) consisting of a Pre-filter, Electric Heating Coil (HG-05R-705), Cooling Coil (CO-05R-705), and Supply Fan (BL-05R-705).

6.11.5.3.3 Maintenance and Canister Inspection Areas

The Maintenance and Canister Inspection Areas are supplied by one 100% capacity Air Handling Unit (AH-05R-703) consisting of a mixing box section, Pre-filter, High Efficiency Filter, Electric Coil (HG-05R-703), Cooling Coil (CO-05R-703), and Supply Fan (BL-05R-703). Electric Duct Heaters (EH-05R-001 through 006) provide the required heating to the various rooms.

The room air is exhausted from the Maintenance and Canister Inspection Areas by one 100% capacity Exhaust Fan (BL-05S-703).

6.11.5.3.4 Equipment Rooms

The equipment rooms are supplied by one 100% capacity Air Handling Unit (AH-05R-702) consisting of a mixing box section, pre-filter section, Evaporative Cooler (EC-05R-702), and Supply Fan

(BL-05R-702). Electric Duct Heaters (EH-05R-007 through 009) provide the required heating to the various rooms.

Room air is exhausted from the equipment rooms by a 100% capacity Return/Exhaust Fan (BL-05S-702).

6.11.5.3.5 Offices and Local Operating Stations

The offices and local operating stations are serviced by one 100% Air Handling Unit (AH-05R-701) consisting of a pre-filter, high efficiency filter, Cooling Coil (CO-05R-701), and Supply Fan (BL-05R-701). Electric Duct Heaters (EH-05R-010, 011 and 012) maintain the heating requirement in the various rooms.

6.11.5.3.6 A detail system operation narrative for the Service Building HVAC Systems is provided in the Miscellaneous Building HVAC Systems Process Control Description (PCD) DS-05J, Sections 32 through 39.

6.11.5.4 Equipment Description

The major HVAC components for the Service Building are listed in Table 6.11.5.4-1. A complete list of all components is provided in the Miscellaneous Building HVAC Systems PCD DS-05J.

Table 6.11.5.4-1
Service Building HVAC Components

Equipment ID	Description	Design Parameters
AH-05R-701	Air Handling Unit	2410 CFM/77 MBTUH
AH-05R-702	Air Handling Unit	43,700 CFM/60 HP
AH-05R-703	Air Handling Unit	400 CFM/0.1 HP
AH-05R-704	Air Handling Unit	46,000 CFM/50 HP
AH-05R-705	Air Handling Unit	3,350 CFM/1 HP
CU-05R-705	Condensing Unit	71.4 MBTUH
BL-05S-701	Exhaust Fan	500 CFM/¼ HP
BL-05S-702	Return/Exhaust Fan	45,000 CFM/50 HP
BL-05S-703	Return/Exhaust Fan	1,150 CFM/¼ HP
BL-05S-704	Exhaust Fan	46,000/50 HP
BL-05S-705	Exhaust Fan	25,000 CFM/30 HP
BL-05S-706	Exhaust Fan	850 CFM/1 HP
BL-05S-707	Exhaust Fan	14,600 CFM/20 HP

6.11.6 PROCESS CONSIDERATIONS

6.11.6.1 Utilities and Chemicals

The system utility requirements are summarized below:

a) Instrument Air (IAX): Used for pneumatic control components
b) Sanitary Water (SWX): Used for makeup water requirements
c) Clean Drain (DRX): Used for draining cooling coil condensate and hydronic system maintenance

6.11.6.2 Materials, Fabrication and Construction Requirements

Materials, Fabrication and Construction requirement for utility and interface systems will be in accordance with the following sections:

Section 4.0 Architectural Design Basis
Section 5.0 Electrical Design Basis
Section 7.0 Instrumentation and Control Design Basis
Section 8.0 Mechanical Design Basis
Section 9.0 Piping Design Basis
Section 10.0 Structural/Civil Design Basis
Section 11.0 Fire Protection and Detection Design Basis

Materials, Fabrication and Construction requirements for the HVAC components will be as specified in the equipment data sheets and the specifications listed in Attachment A.

6.11.6.3 HVAC Controls

The HVAC controls for the Building are shown on the HVAC Flow and Control Diagrams listed in Subsection 6.11.1. The HVAC controls are described in detail in the Miscellaneous Building HVAC Systems PCD No. DS-05J.

6.11.6.4 Equipment Arrangement

HVAC equipment and components are shown on the General Arrangement Drawings and HVAC Layout Drawings listed in Subsection 6.11.1.

6.11.7 SAFETY REQUIREMENTS

The safety classification rationale for the Building HVAC System is described in Section 2.5.

6.11.8 RELIABILITY AND MAINTENANCE

6.11.8.1 Reliability

All HVAC components will be designed for a 20-year life, where practical. Redundancy or spare equipment is not provided for the Building HVAC Systems.

The Building HVAC Systems are not required for melter production; thus, the HVAC Systems are not included in the RAM analysis for system availability as described in Section 2.6.

6.11.8.2 Maintenance Requirements

The following general maintenance requirements are included in the Building HVAC System design:

- Maintenance requirements will be provided in accordance with the applicable Hanford design criteria. Equipment should be accessible from either permanently mounted platforms or ladders.

- All floor-mounted HVAC equipment will be mounted on housekeeping pads. Pads should be a minimum of six inches high.

- All grease fittings will be reachable from floor or platform.

- Fill and drain systems will be permanently attached to the equipment. Instrumentation on the fill system will be provided so that makeup can be measured.

6.11.9 ENVIRONMENTAL CONSIDERATIONS

The Building HVAC Systems will have no significant potential impact on the environment.

6.11.10 IMPACT LEVEL

The Mechanical/Electrical building HVAC systems are designated as Impact Level 3 items.

6.11.11 WASTE FORM QUALIFICATION DESIGN REQUIREMENTS

WAPS is not applicable to the building HVAC systems.

6.12 FAN HOUSE HVAC SYSTEMS (SYSTEMS 05T AND 05U)

The Fan House HVAC Systems (Systems 05T and 05U) provides a Zone IV Supply and Exhaust System for the Fan House structure.

6.12.1 REFERENCE DRAWINGS

The Fan House HVAC Systems are shown on the HVAC Flow and Control Diagrams, General Arrangement Drawings, and the HVAC Layout Drawings. Pertinent drawings are listed below.

6.12.1.1 HVAC Flow and Control Diagrams

Drawing No.	Title
H-2-129891 Sheet 1	Fan House Fan Room
H-2-129891 Sheet 2	Fan House Fan Room
H-2-129892 Sheet 1	Fan House Elec. HVAC Equip. Room, F.O.S. Storage, Sample Storage & Battery Room
H-2-129892 Sheet 2	Fan House Elec. HVAC Equip. Room, F.O.S. Storage, Sample Storage & Battery Room
H-2-129892 Sheet 3	Fan House Elec. HVAC Equip. Room, F.O.S. Storage, Sample Storage & Battery Room

6.12.1.2 General Arrangement Drawings

Drawing No.	Title
H-2-118100	Fan House First Floor Plan
H-2-118101	Fan House Second Floor Plan
H-2-118102	Fan Roof Plan
H-2-118103	Fan House South Elevation & Section
H-2-118104	Fan House East & West Elevation

6.12.1.3 HVAC Layout Drawings

Drawing No.	Title
H-2-129260	HVAC First Floor Plan
H-2-129261	HVAC Second Floor Plan
H-2-129262	HVAC Roof Plan & Section
H-2-129263	HVAC Sections
H-2-129264	HVAC Sections

6.12.2 FUNCTIONAL DESIGN CRITERIA (FDC) DOCUMENT

The following sections of the FDC document are applicable to the Fan House HVAC Systems.

FDC Section	Title
4.1.13	Energy Conservation
4.2	Heating, Ventilation, and Air Conditioning

6.12.3 TECHNICAL DATA PACKAGE (TDP) DOCUMENT

The following section of the TDP document is applicable to the Fan House HVAC Systems.

Section	Item	Title
5	700	Fan House Building

6.12.4 ASSUMPTIONS AND REFERENCES

6.12.4.1 Assumptions

a) Supply air ventilation rates will be determined by the room heat loads.

Basis: HPS-SDC-5.1

b) The expected levels of radioactivity downstream of the sand filter are low because of the high filtering efficiency of the HEPA and sand filters; consequently, the Fan House HVAC Systems are not provided with radioactivity control features.

Basis: TDP, Section 5, Item 600.

6.12.4.2 References

a) Hanford Plant Standard, SDC-5.1, Revision 6

b) TDP, Section 5, Item 600

6.12.5 SYSTEM DESCRIPTION

6.12.5.1 Functional Requirements

The following functions are performed by the Fan House HVAC Systems:

- Maintain temperature and ventilation in the Fan House during normal operation.

- Provide ventilation for the Fan House during emergency and Design Basis Accident (DBA), excluding design basis fire, operation while maintaining the space temperature below its maximum design.

- Maintain positive pressure in the Fan House with respect to the outside atmosphere so that the leakage air flow is always from the rooms to the outside.

- The Sand Filter Discharge Tunnel has been designated as Zone I. The final HEPA filter plenums internal space has been designated as Zone II and the work space provided for handling bagged HEPA filters has been designated as Zone III. The remainder of the Fan House has been designated as a Zone IV area and will be maintained at slightly above atmospheric pressure.

- Ventilation air requirements for the Battery Room will be designed to ensure that the hydrogen concentration will not exceed 2% of the room volume.

6.12.5.2 System Interfaces

The interfaces between the Fan House HVAC Systems and other plant systems are described below:

a) Normal Electrical Distribution System (System 32) - provides normal electrical power to heating and ventilation system components

b) Standby Electrical Distribution System (System 33) - provides electrical power to heating and ventilation system components

c) Sanitary Water (System 40) - provides clean water for humidifiers and evaporative coolers

d) Compressed Air System (System 41) - provides instrument air for pneumatic control components

e) Non-Radioactive Liquid Waste Handling System (System 53) - receives discharge from cooling coils condensate.

f) Distributed Control System (System 61) - provides control of the ventilation system

6.12.5.3 Process Description

6.12.5.3.1 Normal Operation

The Zone I Exhaust Fan Room (Room 210), Vestibule (Room 114), and Damper Operator Room (Room 214) are served by two 50% capacity Air Handling Units (AH-05T-711 712) combined with two 50% capacity Return/Exhaust Fans (BL-05U-731 and BL-05U-732). Each Air Handling Unit consists of a mixing box section, High Efficiency Filter, Evaporative Cooler (EC-05T-711 and 712), and Supply Fan (BL-05T-711 and 712). Heating is provided by two 50% capacity electric Unit Heaters (UH-05T-711 and 712).

The Electrical Rooms (Rooms 108 and 110), Field Operating Station 07 (Room 104), HVAC Equipment Room (Room 206), Battery Room (Room 106), and HEPA Filter Storage Room (Room 117) are served by one of two 100% capacity Air Handling Units (AH-05T-721 and 722) (one is operating the other is standby), combined with two 100% capacity Return/Exhaust Fans (BL-05U-741 and 742) and two 100% capacity Air Cooled Condensing Units (CU-05T-721 and 722) and Supply Fan (BL-05T-721 and 722). Heating is provided in the individual zones by electric reheat coils.

6.12.5.4 Emergency Operation

Fan house areas: Zone 1 Exhaust Fan Room (Room 210), Electrical Rooms (Rooms 110 and 108) and other miscellaneous rooms (Rooms 117, 206, 104 and 106) are served by Air Handling Units (AH-05T0-721 and 722), one operating and one standby, with Return/Exhaust Fans (BL-05U-741 and 742), one operating and one standby. These units are also used for normal operations. Air Cooled Condensing Units (CU-05U-721 and 722) are not required to operate during emergency operation.

6.12.5.5 A detail system operation narrative for the Fan House HVAC Systems is provided in the Miscellaneous Building HVAC Systems Process Control Description (PCD) DS-05J, Sections 42 through 49.

6.12.5.6 Equipment Description

The major HVAC components for the Fan House are listed in Table 6.12.5.4-1. A complete list of all components is provided in the Miscellaneous Building HVAC Systems PCD No. DS-05J.

Table 6.12.5.4-1
Fan House Building HVAC Components

Equipment ID	Description	Design Parameters
AH-05T-711	Air Handling Unit	16,000 CFM/15 HP
AH-05T-712	Air Handling Unit	16,000 CFM/15 HP
AH-05T-721	Air Handling Unit	14,780 CFM/487 MBTUH
AH-05T-722	Air Handling Unit	14,780 CFM/487 MBTUH
AH-05T-761	Air Handling Unit	3,200 CFM/3 HP
AH-05T-762	Air Handling Unit	3,200 CFM/3 HP
CU-05T-721	Air Cooled Condensing Unit	487 MBTUH
CU-05T-722	Air Cooled Condensing Unit	487 MBTUH
BL-05U-731	Return/Exhaust Fan	16,000 CFM/10 HP
BL-05U-732	Return/Exhaust Fan	16,000 CFM/10 HP
BL-05U-741	Return/Exhaust Fan	14,780 CFM/10 HP
BL-05U-742	Return/Exhaust Fan	14,780 CFM/10 HP
BL-05U-751	Exhaust Fan	1,155 CFM/¾ HP

6.12.6 PROCESS CONSIDERATIONS

6.12.6.1 Utilities and Chemicals

The system utility requirements are summarized below:

a) Instrument Air (IAX): Used for pneumatic control components
b) Sanitary Water (SWX): Used for makeup water requirements
c) Clean Drain (DRX): Used for draining cooling coil condensate and hydronic system maintenance

6.12.6.2 Materials, Fabrication and Construction Requirements

Material, Fabrication and Construction requirements for utility and interface systems will be in accordance with the following sections:

Section 4.0 Architectural Design Basis
Section 5.0 Electrical Design Basis
Section 7.0 Instrumentation and Control Design Basis
Section 8.0 Mechanical Design Basis
Section 9.0 Piping Design Basis
Section 10.0 Structural/Civil Design Basis
Section 11.0 Fire Protection and Detection Design Basis

6.12.6.3 HVAC Controls

The HVAC controls for the Fan House are shown on the HVAC Flow and Control Diagrams listed in Subsection 6.12.1. The HVAC controls are described in detail in the Miscellaneous Building HVAC Systems PCD No. DS-05J, Sections 42 through 49.

6.12.6.4 Equipment Arrangement

HVAC equipment and components are shown on the General Arrangement Drawings and HVAC Layout Drawings listed in Subsection 6.12.1.

6.12.7 SAFETY REQUIREMENTS

The safety classifications rationale for the Fan House HVAC Systems is described in Section 2.5.

6.12.8 RELIABILITY AND MAINTENANCE

6.12.8.1 Reliability

All HVAC components will be designed for a 20-year life, where practical. 100% redundancy for the Fan House Electrical Room HVAC System. The availability rating for this system is 0.9999 as determined by the RAM analysis described in Section 2.6.

The Fan House Equipment Room HVAC System is not required to operate during DBA.

6.12.8.2 Maintenance Requirements

The following general maintenance requirements are included in the Fan House HVAC System design:

- Maintenance requirements will be provided in accordance with the applicable Hanford design criteria. Equipment should be accessible from either permanently mounted platforms or ladders.
- All floor-mounted HVAC equipment will be mounted on housekeeping pads. Pads should be a minimum of six inches high.
- All grease fittings will be reachable from floor or platform.
- Fill and drain systems will be permanently attached to the equipment. Instrumentation on the fill system will be provided so that makeup can be measured.

6.12.9 ENVIRONMENTAL CONSIDERATIONS

The Fan House HVAC Systems will have no significant potential impact on the environment.

6.12.10 IMPACT LEVEL

The Fan House electrical room air handling units and return/exhaust fans and the Battery Exhaust Fans are designated as Impact Level 2 items. The remaining Fan House HVAC equipment will be designated as Impact Level 3.

6.12.11 WASTE FORM QUALIFICATION DESIGN REQUIREMENTS

WAPS is not applicable to the Fan House HVAC systems.

6.13 WHT/MAINTENANCE BUILDING HVAC SYSTEMS (SYSTEMS 05V AND 05W)

The WHT Maintenance Building HVAC Systems (Systems 05V and 05W) provides an integrated HVAC System design for the WHT vault, pump pits, HVAC Equipment Room, and Maintenance Building and SOP room.

6.13.1 REFERENCE DRAWINGS

The WHT Maintenance Building HVAC Systems are shown on the HVAC Flow and Control Diagrams, General Arrangement Drawings, and HVAC Layout Drawings. Pertinent drawings are listed below.

6.13.1.1 HVAC Flow and Control Diagrams

Drawing No.	Title
H-2-129911 Sheet 1	WHT Vault and Building
H-2-129911 Sheet 2	WHT Vault and Building HVAC Equipment Room
H-2-129911 Sheet 3	WHT Vault and Building
H-2-129911 Sheet 4	WHT Vault and Building
H-2-129911 Sheet 5	WHT Vault and Building
H-2-129943	WHT Tank Atmospheric Reference Pressure Header

6.13.1.2 General Arrangement Drawings

Drawing No.	Title
H-2-118180	WHT Vaults Plan and Sections
H-2-118181	WHT Maintenance Bldg & HVAC Shelter Plans and Section

6.13.1.3 HVAC Layout Drawings

Drawing No.	Title
H-2-129280	HVAC Plans & Sections
H-2-129281	HVAC Plans & Sections

6.13.2 FUNCTIONAL DESIGN CRITERIA (FDC) DOCUMENT

The following sections of the FDC document are applicable to the WHT Vault/Maintenance Building HVAC Systems:

FDC Section	Title
1.3.5.3	Contamination Control
4.1.13	Energy Conservation
4.2	Heating, Ventilation, and Air Conditioning

6.13.3 TECHNICAL DATA PACKAGE (TDP) DOCUMENT

The following section of the TDP document is applicable to the WHT Vault/Maintenance Building HVAC Systems:

Section	Item	Title
3	330	Radioactive Liquid Waste Handling System

6.13.4 ASSUMPTIONS AND REFERENCES

6.13.4.1 Assumptions

a) Ventilation rates for the WHT Vault/Maintenance Building are based on ventilation (pressure) zone requirements for Zone I and Zone II areas.

Basis: FDC, Section 1.3.5.3

b) Ventilation rates for the HVAC Shelter Room is based are the room heat load.

Basis: HPS-SD-5.1

c) Minimum air velocity through openings will be 125 FPM for Zone I areas and 50 FPM for Zone II areas.

Basis: To confine airborne contamination within the respective zones during normal operations and maintenance.

6.13.4.2 References

a) SD-HWV-FDC-001, Revision 3

b) HPS-SDC-5.1, Revision 6

6.13.5 SYSTEM DESCRIPTION

6.13.5.1 Functional Requirements

The following functions are performed by the WHT Vault/Maintenance Building HVAC Systems:

- The Zone III Exhaust System maintains the required ventilation and room pressure differential, with respect to the atmosphere, for the Maintenance Building and the HVAC Equipment Room.

- The Zone I and II Exhaust System maintains the required ventilation and pressure differential, with respect to the atmosphere, for the WHT areas, which include the pump pit second level, transfer pump pits, leak detection pits, annulus pump pit, leak detection well pump pit, annulus, and the Waste Hold Tank (TK-20A-003).

6.13.5.2 System Interfaces

The interfaces between the WHT Vault/Maintenance Building HVAC Systems and described below:

a) Normal Electrical Distribution System (System 32) - provides electrical power for ventilation system

b) Standby Electrical Distribution System (System 33) - provides standby electrical power

c) Compressed Air System (System 41) - provides instrument air for pneumatic control components

d) Distributed Control System (System 61) - provides control of the ventilation system.

6.13.5.3 Process Description

6.13.5.3.1 The WHT Zone III Exhaust Filter Plenum (PF-05W-701) and Exhaust Fan (BL-05W-711 & 712) draw infiltrated air from the Zone III Maintenance Building. The ventilated air then exhausts to the Vitrification Building Zone II exhaust tunnel.

6.13.5.3.2 Heating is provided in the Maintenance Building by four Electric Unit Heaters (UH-05V-001 through 004). Heating is provided in the HVAC Equipment Room by an Electric Duct Heater (EH-05V-001) located in the supply air duct.

6.13.5.3.3 Two 50% capacity redundant exhaust Filter Plenums (PF-05W-703 and PF-05W-704) and their corresponding Exhaust Fans (BL-05W-713 and BL-05W-714) exhaust the ventilated air from the Maintenance Building, Zone I and Zone II areas. Ventilated air is exhausted to the Vitrification Building Zone II exhaust tunnel.

6.13.5.3.4 A detail system operation narrative for the WHT Vault/Maintenance HVAC Systems is provided in the Miscellaneous Building HVAC Systems Process Control Description (PCD) DS-05J, Sections 52 through 59.

6.13.5.4 Equipment Description

The major HVAC components for the WHT Vault/Maintenance Building are listed in Table 6.13.5.4-1. A complete list of all components is provided in the Miscellaneous Building HVAC Systems PCD No. DS-05J.

Table 6.13.5.4-1
WHT Vault/Maintenance Building HVAC Components

Equipment ID	Description	Design Parameters
AH-05V-701	Air Handling Unit	3,000 CFM/5 HP
PF-05W-701	Filter Plenum	2,200 CFM
PF-05W-702A	Filter Plenum	3,000 CFM
PF-05W-702B	Filter Plenum	3,000 CFM
PF-05W-703	Filter Plenum	6,000 CFM
PF-05W-704	Filter Plenum	6,000 CFM
BL-05W-711	Exhaust Fan	2,300 CFM/7.5 HP
BL-05W-712	Exhaust Fan	2,300 CFM/7.5 HP
BL-05W-713	Exhaust Fan	11,000 CFM/50 HP
BL-05W-714	Exhaust Fan	11,000 CFM/50 HP
BL-05W-715	Exhaust Fan	1,675 CFM/10 HP
BL-05W-716	Exhaust Fan	1,675 CFM/10 HP
BL-05W-717	Exhaust Fan	400 CFM/1 HP
BL-05W-718	Exhaust Fan	400 CFM/1 HP

6.13.6 PROCESS CONSIDERATIONS

6.13.6.1 Utilities and Chemicals

The system utility requirements are summarized below:

a) Instrument Air (IAX): Used for pneumatic control components
b) Sanitary Water (SWX): Used for makeup water requirements
c) Firewater (FWX): Used for exhaust filter plenum fire protection (sprinklers) when required
d) Clean Drain (DRX): Used for draining cooling coil condensate and hydronic system maintenance

6.13.6.2 Materials, Fabrication and Construction Requirements

Materials, Fabrication and Construction requirements for utility and interface systems will be in accordance with the following sections:

Section 4.0 Architectural Design Basis
Section 5.0 Electrical Design Basis
Section 7.0 Instrumentation and Control Design Basis
Section 9.0 Mechanical Design Basis
Section 10.0 Piping Design Basis
Section 11.0 Fire protection and detection design basis

Materials, Fabrication and Construction requirements for the HVAC components will be in accordance with the equipment data sheets and the specifications listed in Attachment A.

6.13.6.3 HVAC Controls

The HVAC controls for the WHT Vault/Maintenance Building are shown on the HVAC Flow and Control Diagrams listed in Subsection 6.13.1. The HVAC controls are described in detail in the Miscellaneous Buildings HVAC Systems PCD No. DS-05J, Sections 52 through 59.

6.13.6.4 Equipment Arrangement

HVAC equipment and components are shown on the General Arrangement Drawings and HVAC Layout Drawings listed in Subsection 6.13.1.

6.13.7 SAFETY REQUIREMENTS

The safety classification rationale for the WHT Vault/Maintenance Building HVAC Systems is described in Section 2.5 of the PDG.

6.13.8 RELIABILITY AND MAINTENANCE

6.13.8.1 Reliability

All HVAC components will be designed for a 20-year life, where practical. Two 50% redundant filter plenums and corresponding exhaust fans are provided for the primary system (Zone I and II exhaust).

6.13.8.2 Maintenance Requirements

The following general maintenance requirements are included in the WHT Vault/Maintenance Building HVAC System design:

- Maintenance requirements will be provided in accordance with the applicable Hanford design criteria. Equipment should be accessible from either permanently mounted platforms or ladders.
- All floor-mounted HVAC equipment will be mounted on housekeeping pads. Pads should be a minimum of six inches high.
- All grease fittings will be reachable from floor or from platform
- No fan belts will be located in contaminated or potentially contaminated air streams.
- Fill and drain systems will be permanently attached to the equipment. Instrumentation on the fill system will be provided so that makeup can be measured.

6.13.9 ENVIRONMENTAL CONSIDERATIONS

The WHT Vault/Maintenance Building HVAC System will be designed to meet the environmental compliance items regarding continuous monitoring of the exhaust air.

The exhaust from the HVAC systems is discharged to the environment via a nonsafety class stack. However, a safety-class bypass is provided that opens automatically on an increase in stack back-pressure from blockage or failure. A safety-class isokinetic sampling station is provided to monitor discharge from the HVAC Systems under accident conditions.

6.13.10 IMPACT LEVEL

The WHT Primary Exhaust Systems is designated as Impact Level 2. The remaining HVAC equipment is designated as Impact Level 3 items.

6.13.11 WASTE FORM QUALIFICATION DESIGN REQUIREMENTS

WAPS is not applicable to the WHT/Maintenance building HVAC systems.

6.14 SWITCHGEAR/GENERATOR BUILDING HVAC SYSTEMS (SYSTEMS 05X AND 05Y)

The Switchgear/Generator Building HVAC Systems (Systems 05X and 05Y) provide an integrated HVAC System design for the entire Building.

6.14.1 REFERENCE DRAWINGS

The Switchgear/Generator Building HVAC Systems are shown on the HVAC Flow and Control Diagrams, General Arrangement Drawings, and HVAC Layout Drawings. Pertinent drawings are listed below.

6.14.1.1 HVAC Flow and Control Diagrams

Drawing No.	Title
H-2-129901 Sheet 1	Generator/Switchgear Building Normal & Standby Switchgear Room Supply
H-2-129901 Sheet 2	Generator/Switchgear Building Normal & Standby Switchgear Room Supply
H-2-129902	Generator/Switchgear Building Battery Rooms
H-2-129903	Generator/Switchgear Building Generator Rooms

6.14.1.2 General Arrangement Drawings

Drawing No.	Title
H-2-118170	Switchgear/Generator Building
H-2-118171	Switchgear/Generator Building
H-2-118172	Switchgear/Generator Building
H-2-118173	Switchgear/Generator Building
H-2-118174	Switchgear/Generator Building

6.14.1.3 HVAC Layout Drawings

Drawing No.	Title
H-2-129270	HVAC Basement & Second Floor Plan
H-2-129271	HVAC First Floor Plan
H-2-129272	HVAC Mezzanine Plan
H-2-129273	HVAC Roof Plan
H-2-129274	HVAC Sections
H-2-129275	HVAC Sections

6.14.2 FUNCTIONAL DESIGN CRITERIA (FDC) DOCUMENT

The following sections of the FDC document are applicable to the Switchgear/Generator Building HVAC Systems;

FDC Section	Title
4.1.13	Energy Conservation
4.2	Heating, Ventilation, and Air Conditioning
4.5.5	Electrical

6.14.3 TECHNICAL DATA PACKAGE (TDP) DOCUMENT

The following sections of the TDP document are applicable to the Switchgear/Generator Building HVAC systems:

Section	Item	Title
5	900	Switchgear/Generator Building
8	400	Electrical

6.14.4 ASSUMPTIONS AND REFERENCES

6.14.4.1 Assumptions

a) Supply air ventilation rates will be determined by the room heat loads.

Basis: HPS-SDC-5.1

b) There is no potential for radioactive contamination; the Switchgear/Generator Building is designated as a Zone IV area. The pressure in the building will be slightly above atmospheric pressure.

Basis: There are no source of radioactivity in the Switchgear/Generator Building.

6.14.4.2 References

a) Hanford Plant Standard, SDC-5.1, Revision 6

6.14.5 SYSTEM DESCRIPTION

6.14.5.1 Functional Requirements

The following functions are performed by the Switchgear/Generator Building HVAC Systems:

- Maintain temperature and ventilation in the normal and standby Switchgear Rooms (Rooms 110, 102 and 104), Gas Turbine Generator Rooms (Rooms 106 and 114), and Battery Rooms (Rooms 103 and 112) during normal operations.

- Provide ventilation for standby switchgear rooms, gas turbine and Generator Rooms, and Battery Rooms during energy and Design DBA operations, excluding design basis fire, while maintaining the space design temperature.

- Ventilation air requirements for the Battery Rooms will be designed to ensure that the hydrogen concentration will not exceed 2% of the room volume.

6.14.5.2 System Interfaces

The interfaces between the Switchgear/Generator Building HVAC Systems and other plant systems are described below:

a) Normal Electrical Distribution System (System 32) - provides normal electrical power to heating and ventilation system components

b) Standby Electrical Distribution System (System 33) - provides electrical power to heating and ventilation system components

c) Compressed Air System (System 41) - provides instrument air for pneumatic control components

d) Sanitary Water (System 49) - provides clean water for humidifiers and evaporative coolers

e) Non-radioactive Liquid Waste Handling System (System 53) - receives discharge from cooling coils condensate.

f) Distributed Control System (System 61) - provides control of the ventilation system

6.14.5.3 Process Description

6.14.5.3.1 Normal Operation

The normal and standby Switchgear Rooms, HVAC Equipment Room, and Cable Rooms are supplied by two 100% capacity Air Handling Units (AH-05X-711 and 712). One is operating and the other is standby.

Mixing air plenum is common to both air handling units, and each unit consists of a Pre-filter, Heating Coil (HG-05X-711 and 712), Evaporative Cooler (EC-05X-711 and 712), and Supply Fan (BL-05X-711 and 712).

Battery Rooms are air conditioned by Air Handling Units (AH-05X-715 and 716) and Air Cooled Condensing Units (CU-05X-715 and 716), and Supply Fan (BL-05X-715 and 716). Supply air for Air Handling Units (AH-05X-715 and 716) is from the standby Switchgear Rooms as shown on HVAC Flow and Control Diagrams H-2-129901, sheet 1, and H-2-129901, sheets 1 and 2.

Battery Room air is exhausted by Exhaust Fans (BL-05Y-711 and 712). The two Exhaust Fans (BL-05Y-711 and 712) are designed to operate at all times, including during emergency and DBA conditions.

The Gas Turbine Generator Rooms are ventilated by transferred air from the standby Switchgear Rooms under summer conditions. The ventilation air is then exhausted from Gas Turbine Generator Rooms through Backdraft Dampers (BD-05Y-711 and 712) to the atmosphere. Space temperature is maintained by Unit Heaters (UH-05X-711 and 712).

6.14.5.3.2 Emergency Operation

Standby Switchgear Rooms (Rooms 102 and 104) are supplied by Air Handling Units (AH-05X-713 and 714). Each unit consists of a Pre-filter and Supply Fan (BX-05X-713 and 714). Gas Turbine Generator Rooms are supplied by Supply Fans (BL-05X-717 and 718). The ventilation air is then exhausted to the atmosphere through exhaust louvers.

6.14.5.3.3 A detail system operation narrative for the Switchgear/Generator HVAC Systems is provided in the Miscellaneous Building HVAC Systems Process Control Description (PCD) DS-05J, Sections 62 through 69.

6.14.5.4 Equipment Description

The major HVAC components for the Switchgear/Generator Building are listed in Table 6.14.5.4-1. A complete list of all components is provided in the Miscellaneous Building HVAC Systems PCD No. DS-05J.

Table 6.14.5.4-1
Switchgear/Generator Building HVAC Components

Equipment ID	Description	Design Parameters
AH-05X-711	Air Handling Unit	38,000 CFM/40 HP
AH-05X-712	Air Handling Unit	38,000 CFM/40 HP
AH-05X-713	Air Handling Unit	4,300 CFM/5 HP
AH-05X-714	Air Handling Unit	4,300 CFM/5 HP
AH-05X-715	Air Handling Unit	600 CFM/25 MBTUH
CU-05X-715	Air Cooled Condensing Unit	25 MBTUH
AH-05X-716	Air Handling Unit	600 CFM/25 MBTUH
CO-05X-716	Air Cooled Condensing Unit	25 MBTUH
BL-05X-717	Supply Fan	55,000 CFM/60 HP
BL-05X-718	Supply Fan	55,000 CFM/60 HP
BL-05X-711	Exhaust Fan	630 CFM/$^1/_8$ HP
BL-05X-712	Exhaust Fan	630 CFM/$^1/_8$ HP

6.14.6 PROCESS CONSIDERATIONS

6.14.6.1 Utilities and Chemicals

The system utility requirements are summarized below:

a) Instrument Air (IAX): Used for pneumatic control components
b) Sanitary Water (SWX): Used for makeup water requirements
c) Clean Drain (DRX): Used for FDR draining cooling coil condensate and hydronic system maintenance

6.14.6.2 Materials, Fabrication and Construction Requirements

Materials, Fabrication and Construction requirements for utility and interface systems will be in accordance with the following sections:

Section 4.0 Architectural Design Basis
Section 5.0 Electrical Design Basis
Section 7.0 Instrumentation and Control Design Basis
Section 8.0 Mechanical Design Basis
Section 9.0 Piping Design Basis
Section 10.0 Structural/Civil Design Basis
Section 11.0 Fire Protection and Detection Design Basis

Materials, Fabrication and Construction requirements for the HVAC components will be in accordance with the equipment data sheets and the specifications listed in Attachment A.

6.14.6.3 HVAC Controls

The HVAC controls for the Switchgear/Generator Building are shown on the HVAC Flow and Control Diagrams listed in Subsection 6.14.1.

The HVAC controls are described in detail in the Miscellaneous Building HVAC Systems PCD No. DS-05J, Sections 62 through 69.

6.14.6.4 Equipment Arrangement

The HVAC equipment and components are shown on the General Arrangement Drawings and HVAC Layout Drawings listed in Subsection 6.14.1.

6.14.7 SAFETY REQUIREMENTS

The safety classification rationale for the Switchgear/Generator Building HVAC Systems is described in Section 2.5.

6.14.8 RELIABILITY AND MAINTENANCE

6.14.8.1 Reliability

All HVAC components will be designed for a 20-yr life where practical. Provide 100% redundancy for the standby Switchgear Room for emergency and DBA conditions.

Provide 100% redundancy for the normal and standby Switchgear Rooms to ensure continuous operation during normal conditions.

This system will have a negligible effect on facility availability. The availability analysis is described in Section 2.6.

6.14.8.2 Maintenance Requirements

The following general maintenance requirements are included in the Switchgear/Generator Building HVAC System design:

- Maintenance requirements will be provided in accordance with the applicable Hanford design criteria. Equipment should be accessible from either permanently mounted platforms or ladders.
- All floor-mounted HVAC equipment will be mounted on house-keeping pads. Pads should be a minimum of six inches high.
- Fill and drain systems will be permanently attached to the equipment. Instrumentation on the fill system will be provided so that makeup can be measured.

6.14.9 ENVIRONMENTAL CONSIDERATIONS

The Switchgear/Generator Building HVAC Systems will have no significant potential impact on the environment.

6.14.10 IMPACT LEVEL

The standby switchgear room emergency air handling units and the Battery Room Exhaust Fans are designated as Impact Level 2 items. The remaining HVAC equipment are designated as Impact Level 3 items.

6.14.11 WASTE FORM QUALIFICATION DESIGN REQUIREMENTS

WAPS is not applicable to the Switchgear/Generator building HVAC systems.

6.15 CENTRAL CHILLED WATER SYSTEM (SYSTEM 03A)

The Central Chilled Water System provides chilled water to the HVAC equipment in the Vitrification, Service, North Manipulator Repair, and West Manipulator Repair Buildings.

6.15.1 REFERENCE DRAWINGS

The Central Chilled Water System is shown on the HVAC Flow and Control Diagrams and the General Arrangement Drawing. Pertinent drawings are listed below.

6.15.1.1 HVAC Flow and Control Diagrams

Drawing No.	Title
H-2-129931 Sheet 1	Central Chilled Water System
H-2-129931 Sheet 2	Central Chilled Water System
H-2-129931 Sheet 3	Central Chilled Water System
H-2-129931 Sheet 4	Central Chilled Water System
H-2-129931 Sheet 5	Central Chilled Water System

6.15.1.2 General Arrangement Drawings

Drawing No.	Title
H-2-118121	Service Building First Floor Plan - Center Section

6.15.2 FUNCTIONAL DESIGN CRITERIA (FDC) DOCUMENT

The following sections of the FDC document are applicable to the Central Chilled Water System.

FDC Section	Title
4.1.13	Energy Conservation
4.2	Heating, Ventilation, and Air Conditioning

6.15.3 TECHNICAL DATA PACKAGE (TDP) DOCUMENT

The following sections of the TDP document are applicable to the Central Chilled Water System:

Section	Item	Title
7	100	HVAC-Vitrification Building
7	200	HVAC-Service Building
15	300	Maintenance Shops

6.15.4 ASSUMPTIONS AND REFERENCES

6.15.4.1 Assumptions

a) The Central Chilled Water System is not required to perform or support any safety functions.

b) There is no potential of radioactive contamination of the system because the system does not come in contact with contaminated air.

c) Air flow velocity across chilled water cooling coils should not exceed 500 FPM.

Basis: HPS-SDC-5.1

d) Water flow velocity in the pipes will be between 3 and 8 FPS.

Basis: 1985 ASHRAE Fundamentals Handbook, Chapter 34

e) All chilled water piping, chillers, tanks, and pumps will be insulated.

Basis: Insulation prevents heat gain to the piping and equipment from the room.

6.15.4.2 References

a) HPS-SDC-5.1, Section 0.3.C

b) 1985 ASHRAE Fundamentals Handbook

6.15.5 SYSTEM DESCRIPTION

6.15.5.1 Functional Requirements

The Central Chilled Water System supplies approximately 44°F chilled water to the various cooling coils in the Vitrification, Service, and Manipulator Repair Buildings. The temperature rise allowed by the chilled water coils will be 8°F to 10°F. The chillers will reject heat through the Cooling Tower System.

6.15.5.2 System Interfaces

The interfaces between the Central Chilled Water System and the other plant systems are described below:

a) Normal Electrical Distribution System (System 32) - provides a source of electrical power to operate the system

b) Compressed Air System (System 41) - provides instrument air for the pneumatic instruments

c) Cooling Tower System (System 44) - provides cooling water to the chillers

d) Process Water System (System 48) - provides makeup water

e) Non-Radioactive Liquid Waste Handling System (System 53) - flushes and drains, when necessary, for maintenance and service.

6.15.5.3 Process Description

6.15.5.3.1 The Central Chilled Water System is handled by four 25% capacity Water Chillers (CM-03A-701 through 704). Chilled water is circulated by Chilled Water Pumps (PX-03A-701 through 704).

6.15.5.3.2 The expansion tank is connected to the chilled water pumps suction header to compensate for thermal expansion of the water.

6.15.5.3.3 The air separator tank in the pumps suction header removes air from the system and directs it to the expansion tank.

6.15.5.3.4 The refrigeration chillers and pumps are operated from an FOS and CCR. Interlocks are provided for the chillers to prevent operational damage. All necessary indications and alarms to monitor safe operation of the chillers are provided.

6.15.5.3.5 The Central Chilled Water System will be provided with 40% of glycol by weight for freeze protection.

6.15.5.3.6 A detail system operation narrative for the Central Chilled Water System is provided in the Chilled Water, Heat Recovery and Atmospheric Reference Header HVAC Systems Process Control Description (PCD) DS-03A, Sections 2 through 9.

6.15.5.4 Equipment Description

The major components for the Central Chilled Water System are listed in Table 6.15.5.4-1. A complete list of all components is provided in the Chilled Water, Heat Recovery, and Atmospheric Reference Header HVAC Systems PCD No. DS-03A.

Table 6.15.5.4-1
Central Chilled Water System Components

Equipment ID	Description	Design Parameters
CM-03A-701	Water Chiller	522 TONS
CM-03A-702	Water Chiller	522 TONS
CM-03A-703	Water Chiller	522 TONS
CM-03A-704	Water Chiller	522 TONS
PX-03A-701	Chilled Water Pumps	1686 GPM
PX-03A-702	Chilled Water Pumps	1686 GPM
PX-03A-703	Chilled Water Pumps	1686 GPM
PX-03A-704	Chilled Water Pumps	1686 GPM
TK-03A-701	Expansion Tank	264 GAL
TK-03A-702	Air Separator	6100 GAL
TK-03A-703	Chemical Addition Tank	(TBD)

6.15.6 PROCESS CONSIDERATIONS

6.15.6.1 Utilities and Chemicals

The system utility requirements are summarized below:

a) Instrument Air (IAX): Used for pneumatic control components
b) Sanitary Water (SWX): Used for makeup water requirements
c) Clean Drain (DRX): Used for draining cooling coil condensate and hydronic system maintenance

6.15.6.2 Materials, Fabrication and Construction Requirements

Materials, Fabrication and Construction requirements for utility and interface systems will be in accordance with the following sections:

Section 4.0 Architectural Design Basis
Section 5.0 Electrical Design Basis
Section 7.0 Instrumentation and Control Design Basis
Section 8.0 Mechanical Design Basis
Section 9.0 Piping Design Basis
Section 10.0 Structural/Civil Design Basis
Section 11.0 Fire Protection and Detection Design BAsis

Materials, Fabrication and Construction requirements for the HVAC components will be in accordance with the equipment data sheets and the specifications listed in Attachment A.

6.15.6.3 HVAC Controls

The HVAC controls for the Central Chilled Water System are shown on the HVAC Flow and Control Diagrams listed in Subsection 6.15.1. The HVAC controls are described in detail in the Process Control Description No. DS-03A.

6.15.6.4 Equipment Arrangement

The Central Chilled Water components are shown on General Arrangement Drawing No. H-2-118121.

6.15.7 SAFETY REQUIREMENTS

The safety classification for the Central Chilled Water System is described in Section 2.5.

6.15.8 RELIABILITY AND MAINTENANCE

6.15.8.1 Reliability

All components for the Central Chilled Water System will be designed for a 20-year life, where practical. Spare capacity and system flexibility will be included in the system design to ensure continuous operation during normal conditions. For 25% capacity chillers with corresponding chilled water pumps supplies the required chilled water to the air handling units. If one chiller malfunctions or requires maintenance, the three remaining chillers will circulate the chilled water through the system. Critical areas in the Vitrification Building are provided with redundant air handling units. The availability rating for this system is 0.997 as determined by the RAM analysis described in Section 2.6.

6.15.8.2 Maintenance Requirements

The following general maintenance requirements are included in the Central Chilled Water System design:

- Maintenance requirements will be provided in accordance with the applicable Hanford design criteria. Equipment should be accessible from either permanently mounted platforms or ladders.

- All floor-mounted equipment will be mounted on house-keeping pads. Pads should be a minimum of six inches high.

- Fill and drain systems will be permanently attached to the equipment. Instrumentation on the fill system will be provided so that makeup can be measured.

6.15.9 ENVIRONMENTAL CONSIDERATIONS

The Central Chilled Water System will have no significant potential impact on the environment.

6.15.10 IMPACT LEVEL

The Central Chilled Water system is designated as an Impact Level 3 item.

6.15.11 WASTE FORM QUALIFICATION DESIGN REQUIREMENTS

WAPS is not applicable to the Central Chilled Water system.

6.16 OCB CHILLED WATER SYSTEM (SYSTEM 03B)

The OC/REB Chilled Water System provides chilled water to the HVAC equipment in the Operations Control Building.

6.16.1 REFERENCE DRAWINGS

The OC/REB Chilled Water System is shown on the HVAC Flow and Control Diagrams and the General Arrangement Drawing. Pertinent drawings are listed below.

6.16.1.1 HVAC Flow and Control Diagrams

Drawing No.	Title
H-2-129932 Sheet 1	OC/REB Chilled Water System
H-2-129932 Sheet 2	OC/REB Chilled Water System

6.16.1.2 General Arrangement Drawings

Drawing No.	Title
H-2-118121	Service Building First Floor Plan - Center Section

6.16.2 FUNCTIONAL DESIGN CRITERIA (FDC) DOCUMENT

The following sections of the FDC document are applicable to the OCB Chilled Water System:

FDC Section	Title
4.1.13	Energy Conservation
4.2	Heating, Ventilation, and Air Conditioning

6.16.3 TECHNICAL DATA PACKAGE (TDP) DOCUMENT

There are no TDP document sections applicable to the OCB Chilled Water System.

6.16.4 ASSUMPTIONS AND REFERENCES

6.16.4.1 Assumptions

a) The OCB Chilled Water System is not required to perform or support any safety function.

b) There is no potential of radioactive contamination of the system because the system does not come in contact with contaminated air.

c) Air flow velocity across chilled water cooling coils should not exceed 500 FPM.

Basis: HPS-SDC-5.1

d) Water flow velocity in pipes will be between 3 and 8 FPS.

Basis: 1985 ASHRAE Fundamentals Handbook, Chapter 34

e) All chilled water piping, chillers, tanks, and pumps will be insulated

Basis: Insulation prevents heat gain to the piping and equipment from the room.

6.16.4.2 References

a) HPS-SDC-5.1, Section 0.3.C

b) 1985 ASHRAE Fundamentals Handbook

6.16.5 SYSTEM DESCRIPTION

6.16.5.1 Functional Requirements

The OC/REB Chilled Water System supplies approximately 44°F chilled water to the various cooling coils in the Operations Control Building.

The temperature rise allowed by the chilled water coils will be 8°F to 10°F. The chillers will reject heat through the Cooling Tower System.

6.16.5.2 System Interfaces

The interfaces between the OCB Chilled Water System and the other systems in the plant are described below:

a) Normal Electrical Distribution System (System 32) - provides a source of electrical power to operate the system

b) Compressed Air System (System 41) - provides instrument air for the pneumatic instruments

c) Cooling Tower System (System 44) - provides cooling water to the chillers

d) Process Water System (System 48) - provides makeup water

e) Non-Radioactive Liquid Waste Handling System (System 53) - flushes and drains, when necessary, for maintenance and service.

6.16.5.3 Process Description

6.16.5.3.1 The OC/REB Chilled Water System is handled by two 100% capacity Water Chillers (CM-03B-701 and 702). Chilled water is circulated by Chilled Water pumps (PX-03B-701 and 702).

6.16.5.3.2 The expansion tank is connected to the chilled water pumps suction header to compensate for thermal expansion of the water.

6.16.5.3.3 The air separator tank in the pumps suction header removes air from the system and directs it to the expansion tank.

6.16.5.3.4 The refrigeration chillers and pumps are operated from an FOS and CCR. Interlocks are provided for the chillers to prevent operational damage. All necessary indications and alarms to monitor safe operation of the chillers are provided.

6.16.5.3.5 A detail system operation narrative for the OC/REB Chilled Water System is provided in the Chilled Water, Heat Recovery, and Atmospheric Reference Header HVAC Systems Process Control Description (PCD) DS-03A, Sections 12 through 19.

6.16.5.4 Equipment Description

The major components for the OC/REB Chilled Water System are listed in Table 6.16.5.4-1. A complete list of all components is provided in the Chilled Water, Heat Recovery, and Atmospheric Reference Header HVAC Systems PCD No. DS-03A.

Table 6.16.5.4-1
OCB Chilled Water System Components

Equipment ID	Description	Design Parameters
CM-03B-701	Water Chiller	160 TONS
CM-03B-702	Water Chiller	160 TONS
PX-03B-701	Chilled Water Pumps	268 GPM
PX-03B-702	Chilled Water Pumps	268 GPM
TK-03B-701	Expansion Tank	30 GAL
TK-03B-702	Air Separator	(TBD)
TK-03B-703	Chemical Addition Tank	(TBD)

6.16.6 PROCESS CONSIDERATIONS

6.16.6.1 Utilities and Chemicals

The system utility requirements are summarized below:

a) Instrument Air (IAX): Used for pneumatic control components
b) Sanitary Water (SWX): Used for makeup water requirements

c) Clean Drain (DRX): Used for draining cooling coil condensate and hydronic system maintenance

6.16.6.2 Materials, Fabrication and Construction Requirements

Materials, Fabrication and Construction requirements for the utility and interface systems will be in accordance with the following sections:

Section 4.0 Architectural Design Basis
Section 5.0 Electrical Design Basis
Section 7.0 Instrumentation and Control Design Basis
Section 8.0 Mechanical Design Basis
Section 9.0 Piping Design Basis
Section 10.0 Structural/Civil Design Basis
Section 11.0 Fire Protection and Detection Design Basis

Materials, Fabrication and Construction requirements for the HVAC components will be in accordance with the equipment data sheets and the specifications listed in Attachment A.

6.16.6.3 HVAC Controls

The HVAC controls for the OC/REB System are shown on the HVAC Flow and Control Diagrams listed in Section 6.16.1. The HVAC controls are described in detail in the Process Control Description No. DS-03A.

6.16.6.4 Equipment Arrangement

The OC/REB Chilled Water components are shown on General Arrangement Drawing No. H-2-118121.

6.16.7 SAFETY REQUIREMENTS

The safety classification for the OC/REB Chilled Water System is Safety is described in Section 2.5.

6.16.8 RELIABILITY AND MAINTENANCE

6.16.8.1 Reliability

All components for the OC/REB Chilled Water System will be designed for a 20-year life, where practical. Two 100% capacity chillers with corresponding chilled water pumps are provided to ensure continuous operations during normal conditions.

6.16.8.2 Maintenance Requirements

The following general maintenance requirements are included in the OC/REB Chilled Water System design:

- Maintenance requirements will be provided in accordance with the applicable Hanford design criteria. Equipment should be accessible from either permanently mounted platforms or ladders.

- All floor-mounted equipment will be mounted on house-keeping pads. Pads should be a minimum of six inches high.

- Fill and drain systems will be permanently attached to the equipment. Instrumentation on the fill system will be provided so that makeup can be measured.

6.16.9 ENVIRONMENTAL CONSIDERATIONS

The OC/REB Chilled Water System will have no significant potential impact on the environment.

6.16.10 IMPACT LEVEL

The OC/REB Chilled Water system is designated as an Impact Level 3 item.

6.16.11 WASTE FORM QUALIFICATION DESIGN REQUIREMENTS

WAPS is not applicable to the OC/REB Chilled Water system.

6.17 HEAT RECOVERY SYSTEM (SYSTEM 03C)

The Heat Recovery System recovers heat from the Vitrification Building Zone II and III exhaust air in order to preheat the Zone III supply air.

6.17.1 REFERENCE DRAWINGS

The Heat Recovery System is shown on the HVAC Flow and Control Diagrams and the General Arrangement Drawings. Pertinent drawings are listed below.

6.17.1.1 HVAC Flow and Control Diagrams

Drawing No.	Title
H-2-129921 Sheet 1	Heat Recovery System Zone II and III
H-2-129921 Sheet 2	Heat Recovery System Zone II and III

6.17.1.2 General Arrangement Drawings

Drawing No.	Title
H-2-TBD	Vitrification Building - Plan
H-2-TBD	Vitrification Building - Plan
H-2-TBD	Vitrification Building - Section

6.17.2 FUNCTIONAL DESIGN CRITERIA (FDC) DOCUMENT

The following sections of the FDC document are applicable to the Heat Recovery System.

FDC Section	Title
4.1.13	Energy Conservation
4.2	Heating, Ventilation, and Air Conditioning

6.17.3 TECHNICAL DATA PACKAGE (TDP) DOCUMENT

The following section of the TDP document is applicable to the Heat Recovery System:

Section	Item	Title
7	110	HVAC - Vitrification Building

6.17.4 ASSUMPTIONS AND REFERENCES

6.17.4.1 Assumptions

a) The Heat Recovery System is not required to perform or support any safety function.

Basis: This system is part of the Vitrification Building Nonsafety HVAC system.

b) Air flow velocity across the heat recovery coils will be between 300 to 600 FPM.

Basis: 1988 ASHRAE Equipment Handbook, Chapter 34

c) Water flow velocity in the pipes will be between 3 and 8 FPS.

Basis: 1985 ASHRAE Fundamental Handbook, Chapter 34

6.17.4.2 REFERENCES

a) 1985 ASHRAE Fundamental Handbook, Chapter 34

b) 1988 ASHRAE Equipment Handbook, Chapter 34

6.17.5 SYSTEM DESCRIPTION

6.17.5.1 Functional Requirements

The Heat Recovery System (System 03C) performs the following functions:

- Recovers Zone II exhaust air heat via Heat Recovery Coils (HR-05D-721 through 725).

- Delivers the recovered heat to Zone III supply air via Heat Recovery Coils (HR-05E-701 through 705).

6.17.5.2 System Interfaces

The interfaces between the Heat Recovery System and the other plant systems are described below:

a) Normal Electrical Distribution System (System 32) - provides a source of electrical power to operate the system

b) Compressed Air System (System 41) - provides instrument air for the pneumatic instruments

c) Process Water System (System 48) - provides makeup water

d) Non-Radioactive Liquid Waste Handling System (System 53) - flushes and drains, when necessary, for maintenance and service.

6.17.5.3 Process Description

6.17.5.3.1 The Heat Recovery System consists of two 100% capacity Pumps (one operating, one standby) (PX-03C-701 AND 702), Zone II Exhaust Heat Recovery Coils (four operating, one standby) (HR-05D-721 through 725) and Zone II Supply Heat Recovery Coils (four operating, one standby) (HR-05E-701 through 705).

6.17.5.3.2 The expansion tank is connected to the circulating water pump suction header to compensate for thermal expansion of the water.

6.17.5.3.3 The air separator tank in the pump suction header removes air from the system and directs it to the expansion tank.

6.17.5.3.4 The Heat Recovery System will be provided with 40% of glycol by weight for freeze protection.

6.17.5.3.5 A detail system operation narrative for the Heat Recovery System is provided in the Chilled Water, Heat Recovery, and Atmospheric Reference Header HVAC Systems Process Control Description (PCD) DS-03A, Sections 22 through 29.

6.17.5.4 Equipment Description

The major components for the Heat Recovery System are listed in Table 6.17.5.4-1. A complete list of all components is provided in PCD No. DS-03A.

Table 6.17.5.4-1
Heat Recovery System Components

Equipment ID	Description	Design Parameters
HR-05D-721	Heat Recovery Coil	1,967 MBTUH/150 GPM
HR-05D-722	Heat Recovery Coil	1,967 MBTUH/150 GPM
HR-05D-723	Heat Recovery Coil	1,967 MBTUH/150 GPM
HR-05D-724	Heat Recovery Coil	1,967 MBTUH/150 GPM
HR-05E-701	Heat Recovery Coil	1,967 MBTUH/150 GPM
HR-05D-702	Heat Recovery Coil	1,967 MBTUH/150 GPM
HR-05D-703	Heat Recovery Coil	1,967 MBTUH/150 GPM
HR-05D-704	Heat Recovery Coil	1,967 MBTUH/150 GPM
PX-03C-701	Circulating Pump	600 GPM
PX-03C-702	Circulating Pump	600 GPM
TK-03C-701	Expansion Tank	24 GAL
TK-03C-702	Air Separator	(TBD)
TK-03C-703	Chemical Feeder Tank	(TBD)

6.17.6 PROCESS CONSIDERATIONS

6.17.6.1 Utilities and Chemicals

The system utility requirements are summarized below:

a) Instrument Air (IAX): Used for pneumatic control components
b) Sanitary Water (SWX): Used for makeup water requirements
c) Clean Drain (DRX): Used for draining cooling coil condensate and hydronic system maintenance

6.17.6.2 Materials, Fabrication and Construction Requirements

Materials, Fabrication and Construction requirements for utility and interface systems will be in accordance with the following sections:

Section 4.0 Architectural Design Basis
Section 5.0 Electrical Design Basis
Section 7.0 Instrumentation and Control Design Basis
Section 8.0 Mechanical Design Basis
Section 9.0 Piping Design Basis
Section 10.0 Structural/Civil Design Basis
Section 11.0 Fire Protection and Detection Design Basis

Materials, Fabrication and Construction requirements for the HVAC components will be in accordance with the equipment data sheets and the specifications listed in Attachment A.

6.17.6.3 HVAC Controls

The HVAC controls for the Heat Recovery System are shown on the HVAC Flow and Control Diagrams listed in Section 6.17.1. The HVAC

controls are described in detail in the Process Control Description No. DS-03A.

6.17.6.4 Equipment Arrangement

The heat recovery components are shown on General Arrangement Drawings listed in Subsection 6.17.1.

6.17.7 SAFETY REQUIREMENTS

The safety classification for the Heat Recovery System is Safety Class 3.

The Heat Recovery System contains ethylene glycol, which has occupational hazards only. Malfunction of the system affects HVAC heating requirements, but not confinement. The Heat Recovery System performs no safety function.

6.17.8 RELIABILITY AND MAINTENANCE

6.17.8.1 Reliability

All components for the Heat Recovery System will be designed for a 20-year life, where practical. Two 100% circulating pumps are provided to ensure continuous operation in case of a pump malfunction or maintenance. This system is not required for melter production and thus was not included in the RAM analysis described in Section 2.6.

6.17.8.2 Maintenance Requirements

The following general maintenance requirements are included in the Heat Recovery System design:

- Maintenance requirements will be provided in accordance with the applicable Hanford design criteria. Equipment should be accessible from either permanently mounted platforms or ladders.
- All floor-mounted equipment will be mounted on house-keeping pads. Pads should be a minimum of six inches high.
- Fill and drain systems will be permanently attached to the equipment. Instrumentation on the fill system will be provided so that makeup can be measured.

6.17.9 ENVIRONMENTAL CONSIDERATIONS

The Heat Recovery System will have no significant potential impact on the environment.

6.17.10 IMPACT LEVEL

The Heat Recovery system is designated as an Impact Level 3 item.

6.17.11 WASTE FORM QUALIFICATION DESIGN REQUIREMENTS

WAPS is not applicable to the Heat Recovery system.

ATTACHMENT A

HVAC SPECIFICATIONS FOR PRELIMINARY DESIGN

SECTION	TITLE
15160	Centrifugal Pumps
15680	Water Chillers
15755	Heat Exchangers and Coils
15780	Air Conditioning Unit
15755	Air Handling Unit (Customer Built)
15860	Centrifugal Fans
15885	HEPA Filter Plenums
15886	Sand Filter
15890	Ductwork
15910	Dampers

9 1 1 3 1 0 7 5 7

SECTION 7.0

INSTRUMENTATION AND CONTROL DESIGN BASIS

TABLE OF CONTENTS

		PAGE
7.0	INSTRUMENTATION AND CONTROL DESIGN BASIS	1
7.1	SCOPE	1
7.2	CODES AND STANDARDS	1
7.3	GENERAL CONSIDERATIONS	6
7.3.1	Facility and Plant Process Control & Monitoring Philosophy	6
7.3.2	I&C Design Approach	9
7.4	CONTROL SYSTEMS DESIGN CONSIDERATIONS AND STANDARD PRACTICES	13
7.4.1	Field Instrumentation	13
7.4.2	Instrument Selection	15
7.4.3	In-Cell Instrumentation	43
7.4.4	HVAC Instrumentation	44
7.4.5	Health Protection Instrumentation	44
7.4.6	Instrument Representation	54
7.4.7	Instrument Installation	55
7.4.8	Distributed Control System (System 61)	59
7.4.9	Health Protection System (System 62)	66
7.4.10	Analytical Laboratory Computer System (Portion of System 64)	76
7.4.11	Management Information System (System 66)	76
7.4.12	Local Instrument Racks/Panels	76
7.4.13	Fire Alarm Annunciation System	83
7.5	SPECIFICATIONS	83
7.6	DRAWINGS	84

THIS PAGE INTENTIONALLY
LEFT BLANK

7.0 INSTRUMENTATION AND CONTROL DESIGN BASIS

7.1 SCOPE

This design basis for instrumentation and control covers the design practices applicable to process, radiation, fire detection, and heating, ventilation, and air conditioning measurement and control for the HWVP at Hanford, Washington. All items covered herein will comply with the Hanford Waste Vitrification Plant (HWVP) Functional Design Criteria, document number SD-HWV-FDC-001, Revision 2 and the HWVP Technical Data Package, document number SD-HWV-DP-001, Revision 2 and the latest editions of the applicable codes and standards in effect as shown in Section 7.2.

This scope can be broken into seven major portions: instrumentation, the Distributed Control System (System 61), the Health Protection System (System 62), the Analytical Laboratory Computer System (System 64), the Management Information System (System 66), local control panels, and the fire alarm annunciation system.

For the purposes of this section of the Design Guide, "instrumentation" is that hardware which performs a specific monitoring or control function such as a control valve or a pressure gauge and is given a unique instrument tag number. "Equipment" is the balance of items specified by I&C. Equipment may include multiplexers, control consoles and other hardware not limited to a specific monitoring or control function. Equipment may also include two or more instruments with regular instrument tag numbers mounted together. Equipment will be given equipment numbers and may or may not appear or be referenced on flow diagrams, as required, for clarity. All equipment will appear on the appropriate system block diagram(s).

7.2 CODES AND STANDARDS

All instruments and equipment will comply with the latest editions of the applicable codes and standards in effect at the time of issuance of the purchase order or specification unless otherwise specified.

Department of Energy Standards

DOE 6430.1A	General Design Criteria
DOE/EV/1830-T5	1980 A Guide to Reducing Radiation Exposure to As Low As Reasonably Achievable (ALARA)

Federal Standards

Fed Std 595a Rev. A, Change Notice 9	Colors

Military Standards

MIL. STD 217E	1986 Reliability Prediction for Electronic Equipment
MIL. STD 1472C Notice 3	Human Engineering Design Criteria for Military Systems, Equipment and Facilities

U.S. Nuclear Regulatory Commission

NUREG 0856	"Final Technical Position on Documentation of Computer codes for High-Level Waste Management"
NUREG 0700	"Guidelines for Control Room Design Reviews"

American National Standards Institute (ANSI)

ANSI/ANS 10.4	1987 "American National Standard Guidelines for the Verification and Validation of Scientific and Engineering Computer Programs for the Nuclear Industry."
ANSI B16.5	Pipe Flanges and Flanged Fittings
ANSI B16.10	Face-to-Face and End-to-End Dimensions of Valves
ANSI B16.11	Forged Steel Fittings, Socket Welding and Threaded
ANSI B16.25	Buttwelding Ends
ANSI B31-3	Pressure Piping Refinery
ANSI MC 96.1	Temperature Measurement Thermocouples
ANSI N13.1	Guide to Sampling Airborne Radioactive Materials in Nuclear Facilities
ANSI N13.10	1974 "Specifications and Performance of On-site Instrumentation for Continuously Monitoring Radioactivity in Effluents."

ANSI N42.18	Specification and Performance of On-Site Instrumentation for Continuously Monitoring Radioactivity in Effluents
ANSI N320	1979 "Performance Specification for Reactor Emergency Radiological Monitoring Instrumentation."

<u>American Petroleum Institute (API)</u>

API-STD-526	Flanged Steel Safety Relief Valves
API-STD-527	Commercial Seat Tightness of Safety Relief Valves with Metal-to-Metal Seats
API-STD-2530	Orifice Metering of Natural Gas and other Related Hydrocarbon Fluids

<u>American Society of Mechanical Engineers (ASME)</u>

ASME B1.20.1-83	Pipe Threads, General Purpose (Inch)
ASME	Section VII Boiler and Pressure Vessel Code
ASME NQA-1	1986 Quality Assurance Program Requirements for Nuclear Facilities

<u>American Society for Testing and Materials (ASTM)</u>

ASTM A105/A105M Rev. A	Standard Specification for Forgings, Carbon Steel, for Piping Components
ASTM A167	Standard Specification for Stainless and Heat-Resisting Chromium-Nickel Steel Plate, Sheet, and Strip
ASTM A182/A182M	Standard Specification for Forged or Rolled Alloy-Steel Pipe Flanges, Forged Fittings, and Valves and Parts for High-Temperature Service
ASTM A216/A216M	Standard Specification for Steel Castings, Carbon, Suitable for Fusion Welding, for High-Temperature Service
ASTM A351/A351M	Standard Specification for Steel Castings, Austentic, for High-Temperature Service
ASTM A480-84	General Requirements for Flat-Rolled Stainless and Heat-Resisting Steel, Plate, and Strip

ASTM A632	Standard Specification for Seamless and Welded Austenitic Stainless Steel Tubing (Small Diameter) for General Service
ASTM B251	General Requirement for Wrought Seamless Copper and Copper Alloy Tubes

Flow Controls Institute (FCI)

FCI 70-2	Control Valve Seat Leakage, Quality Control Standard

Institute of Electrical and Electronic Engineers (IEEE)

IEEE-323	Standard for Qualifying Class 1E Equipment for Nuclear Power Generating Stations
IEEE-334	Standard for Type Tests of Continuous Duty Class 1E Motors for Nuclear Power Generating Stations
IEEE 344	1975 IEEE Recommended Practices for Seismic Qualification of Class 1E Equipment for Nuclear Power Plants
IEEE STD 379	Standard Application of the Single Failure Criterion to Nuclear Power Generating Station Safety Systems
IEEE STD 384	Standard Criteria for Independence of Class 1E Equipment and Circuits
IEEE 730	1984 "Standard for Software Quality Assurance Plans"
IEEE 828	1983 "Standard for Software Configuration Management Plans"
IEEE 983	1986 "Guide for Software Quality Assurance Planning" ANSI/IEEE 1012 - 1986, "Standard for Software Verification and Validation Plans"
IEEE C37.90.1	Guide for Surge Withstand Capability (SWC) Tests

Instrument Society of American (ISA)

ISA S5.1	Instrumentation Symbols and Identification
ISA S5.2	Binary Logic Diagrams for Process Operations

ISA S5.3	Graphic Symbols for Distributed Control/Shared Display Instrumentation, Logic, and Computer Systems
ISA S5.4	Instrument Loop Diagrams
ISA S515	1985 Graphic Symbols for Process Displays
ISA S18.1	Annunciator Sequences and Specifications
ISA S75.04	Face-to-Face Dimensions for Flangeless Control Valves

National Electrical Manufacturers Association (NEMA)

NEMA 250	1979 Enclosures for Electrical Equipment Revision 1, May 1986 (1000 Volts Maximum)
NEMA ICS 3 Part ICS 3-304	Programmable Controllers

National Fire Protection Association (NFPA)

NFPA-70	National Electrical Code
NFPA-72D	Proprietary Fire Alarm Systems

Scientific Apparatus Makers Association (SAMA)

PMC 20.1	Measurement and Process Control Technology
PMC 33.1	Electromagnetic Susceptibility of Process Control Instrumentation
RC 17-10	Bushings and Wells for Temperature Sensing Elements

Underwriter's Laboratory (UL)

UL-83	Thermoplastic-Insulated Wires and Cables
UL-94	Tests for Flammability of Plastic Materials for Parts in Devices and Appliances
UL-864	Signal System Control Units
UL-1059	Terminal Blocks

7.3 GENERAL CONSIDERATIONS

7.3.1 Facility and Plant Process Control & Monitoring Philosophy

7.3.1.1 General

The vitrification process employed by the HWVP is a relatively new technology designed to reduce the potential for environmental risk posed by radioactive waste material. Therefore, consistent with 6430.1A (Section 1660-99.02) the control system is designed to meet four principal objectives:

- To ensure the process remains within conservatively safe limits with provisions to handle upset conditions
- To minimize the chance of exposing the operators and environment to hazards
- To operate a data base of actual plant operations/parameters
- To permit implementation of improved control methods derived from analysis of the data base

All of these objectives can be met by implementing an Integrated Management and Control System (IMACS). IMACS consists of 4 major computer based subsystems.

- Distributed Control System (DCS)
- Health Protection System (HPS)
- Analytical Laboratory Computer System (ALCS)
- Management Information Systems (MIS)

Each of these subsystems is described later in this section. The subsystems will be interfaced by a local plant communications network. No classified data will be processed by any of the IMACS subsystems. The minimum control requirements for IMACS include:

- Capability to handle simple and complex process control algorithms
- Control software which is readily reconfigurable
- Data acquisition, data base, color CRT display and report functions will utilize user-configurable software or firmware which does not require knowledge of computer programming.

- Capacity for a large historical data base with provision for off-line access
- Installed spare plant interface capacity to permit changing control strategies without disrupting production
- Sufficient computational capacity to implement advanced control strategies
- Primary plant control vested in a central control room with minimum local operator panels.

Although it is desired to perform plant control from a central control room, there are many valid reasons for maintaining some local control capability. These reasons include:

- Permitting plant and instrument maintenance
- Providing emergency stops to avoid injury from moving equipment
- Monitoring the start-up of equipment to ensure that it is operating correctly
- The equipment may be supplied and checked out with a vendor proprietary controls package
- It may be excessively costly or impossible to effectively automate remote controls

7.3.1.2 Central Control Room

The Central Control Room (CCR) is the main control location for the HWVP. In addition, a Backup Central Control Room (BCCR), located in the Vitrification Building, duplicates the functions of the CCR and permits operations to continue if the CCR becomes unusable for any reason.

To maintain the integrity of the control scheme, it is important that proper authority is vested in the CCR operators. Within the CCR, control consoles are provided for a supervisor and an operator for each of the following areas:

HVAC
Melter/Canister
Feed Preparation
Utilities

7.3.1.3 Local Control

A number of special application local control panels interface with the DCS Data Highway. Some of these panels consist of a

few switches with logic and interlocks provided by programmable logic controller or the DCS computers. Others have complete operator interfaces, associated logic and interlocks which are provided by self-contained microprocessors, or relay boxes and an interface to the DCS which is limited to exchanging status and analog values.

The local control panels are required for manual operation or startup of equipment. In each case, the function cannot be performed from the CCR, the local panel is the primary, and only, control location. However, to reinforce the command structure, the mechanization of the control system must accept commands from local control panels only when proper authority has been granted by the CCR by using keylocks, passwords or enabling the local panel. The role of the DCS is limited to monitoring performance and data acquisition.

The exceptions to this control scheme are the HVAC Safety related control panels and process safety related control panels. These panels are rated as Safety Class 1 and 2 and will be hard-wired. In normal operation, the control of the HVAC exhaust fans will be from the CCR. In the event of a DBA the fans are automatically controlled from the Safety Class Panels.

The local control stations require visual inspection of the process or rotating equipment (particularly during start-up). Thus, these control panels cannot, be located in the Field Operating Stations (FOS).

Local Control panels are identified on the P&ID's and will be shown on instrument location drawings. Process operation from local panels are covered in the specific system PCD.

7.3.1.4 Field Operating Stations (FOS)

There are 9 FOSs located in 6 of the HWVP buildings; each FOS contains a number of Distributed Processing Units (DPUs), which are the primary DCS interface to the plant instrumentation. The FOSs provide facilities which permit portable DCS terminals to be plugged into the DPUs or the DCS Data Highway to facilitate maintenance and other special operations. (Additional locations may be added, if necessary).

Both the DPUs and portable DCS terminals are designed to operate in normal ambient conditions.

7.3.1.5 Process Monitoring

Process variables and operations important to plant function and safety are monitored over anticipated ranges in the DCS.

Plant alarm monitoring including logging is provided in the DCS.

7.3.2 I&C Design Approach

7.3.2.1 Standardization and Modularity

Standardization and modularity will be used as much as possible to simplify design, plant operation and maintenance and to reduce initial capital and spares inventory cost. Specific design efforts will include the use of standard "cells" for repeated instrumentation configurations.
To the maximum extent practical, the HWVP will use vitrification technology from existing U.S. Department of Energy (DOE) funded programs based on technical and economic considerations. The Defense Waste Processing Facility (DWPF), West Valley Demonstration Project program and Hanford Site waste vitrification technology will be used in the development of this facility. As such, instrumentation and controls furnished or specified on equipment which are exact copies of DWPF equipment will not be changed unless the furnished concept is unsafe or a conflict arises between the furnished concept and the Contract Documents. Some of these furnished concepts are:

Equipment/Subsystem	System Number
Melter/Turntable	13
Canister Processing Equipment	17, 23

7.3.2.2 Colors

Display and indicator light colors will be specified in accordance with Table 7-2. For items not covered by Table 7-2, "manufacturer's standard" color will be specified.

7.3.2.3 Signal Compatibility

Whenever possible instrument inputs and outputs and system interfaces will be specified so that no relays, or signal converters are required.

7.3.2.4 UL Listing/FM Approval

All instruments and equipment specified by Instrumentation and Controls will be UL-listed or FM-approved. This does not apply to the HPS instruments as they are built in accordance with ANSI and ANS standards.

7.3.2.5 Safety-Related Instrumentation and Equipment

Safety class instrumentation and controls will be designed to monitor safety related variables and safety class systems over expected ranges for normal operation, accident conditions and for safe shutdown. Safety class controls will be provided when required to control these variables. The safety class instruments and controls are identified on the P&ID's with a diamond shaped symbol adjacent to the instrument symbol. Equipment designated as safety class is noted on the P&ID.

Safety instrumentation and controls are provided with suitable redundancy and diversity to insure safety functions can be completed when required and no single point failure will cause loss of protective functions. Redundant safety class electrical signals must be physically protected or separated to prevent a common event from causing failure of the redundant signals. IEEE 379 and IEEE 384 are used for separation and redundancy criteria. Redundancy and diversity are indicated on the P&ID's.

Safety classification of equipment is described in Section 2.5. Requirements for equipment are defined in the section defining that equipment.

Instrumentation associated with safety related equipment will fail in a safe mode following a component or channel failure. Safety class UPS power will be provided to instrumentation and equipment as required. See Subsection 7.4.1.2 for power details.

Safety Class 1 and 2 instrumentation systems are hardwired and routed to redundant Safety Class local panels. Alarm signals to the DCS from safety class instruments are routed through signal isolators to eliminate any DCS failure from effecting the operation of safety class instruments or systems.

7.3.2.6 Component/System Failure

The DCS will perform diagnostic test on all loops and provide malfunction alarms, identify location of malfunction detection, and type of malfunction.

7.3.2.7 Protective System Testing

Instrumentation initiating plant protective functions will include provisions for periodic testing to insure these devices will operate properly under simulated emergency conditions. Protective systems will be identified and grouped into three categories:

TABLE 7-2 - COLORS

Display and Indicator Lights

Color	Meaning	Notes/Examples
White-Maintained	Normal Condition, Status or Information	System in use, pressure normal, motor control in "Auto"
White-Flashing	Unacknowledged Alarm	
Red-Maintained	Abnormal, Alarm or Danger Condition	Process variable too high or too low
Red-Flashing	Imminent Danger to Personnel or Equipment Unacknowledged Alarm	Dangerous levels of temperature, pressure, radiation, etc. Equipment or control failure
Amber-Maintained	Caution, Active State	Valve open, valve not closed (long transition), pump running
Amber-Flashing	Operator Attention, Caution, Action	Cover off, hoist in motion
Green-Maintained	Safe, normal condition	Motor stopped, valve closed, cycle complete
Green-Flashing	Normal activity progressing toward completion	Cycle in progress
Cyan-Maintained	Static and Significant Items	Tag numbers, descriptions, equipment boundaries.
Blue-Maintained	Non-Essential	Utility Lines

TABLE 7-2 - COLORS (Continued)

Pushbuttons and Selector Switches

Color	Meaning	Notes/Examples
Blue-Flashing	Equipment Malfunction	Radiation Detector/ Circuitry Failure
Magenta-Maintained	Radiation	
Black-Maintained	Background	
Reverse Video	Information that may/has changed	
White (Black Letters)	Identification, General Purpose	
Red (White Letters)	Stop, Emergency Stop, Kill Power	
Yellow (Black Letters)	Return, Emergency Return	
Green (White Letters)	Normal Condition	Pump Running
Black (White Letters)	Start Motor, Start Cycle, General Purpose	
White (Black Letters)	Identification, General Purpose	
Yellow (Black Letters)	UPS and Emergency Equipment	
Red (White Letters)	Personnel Hazard, Danger, Caution	

Panels and Console Finish - per Federal Standard 595a

Inside Fed. Color No. 27880 (White)
Outside Fed. Color No. will be developed in detailed design.

1. Activate initiating device - activate protective function is acceptable

2. Activate initiating device - activate protective function is not acceptable, provide override or bypass

3. Activate initiating device - activate protective function is not acceptable, override or bypass is not acceptable

The methods provided to accomplish protective system testing will be developed during detailed design and indicated on the P&ID's.

7.3.3 Design Verification

All specifications, data sheets, and calculations will be independently verified.

7.4 CONTROL SYSTEMS DESIGN CONSIDERATIONS AND STANDARD PRACTICES

7.4.1 Field Instrumentation

The field instrumentation for the HWVP will fall into the three categories of process, heating, ventilation and air conditioning (HVAC), and radiation monitoring.

Despite the differing environmental and application requirements, a consistent instrumentation philosophy will be used throughout the plant as described below.

7.4.1.1 General Philosophy

Instrumentation will monitor variables and operating systems important to function and safety over anticipated ranges for normal or abnormal operation and safe shutdown. Redundancy of instruments will be provided on a selective basis to meet overall availability and safety requirements. All instrument subsystems and systems will be designed to fail in a safe state if conditions such as disconnection, loss of energy or motive power, or adverse environments are experienced. Electronic instruments are preferred over pneumatic instruments. Analog electronic instruments will normally be powered from the DCS and provide a 4-20 mAdc signal capable of driving a minimum of 550 ohms, whenever possible. Stand-alone electronic instruments will operate from a 120 Vac supply and have two-wire 4-20 mAdc outputs, whenever possible. Analog pneumatic instruments will operate from a 100-psig source of instrument air and transmit signals of 3 to 15 psig. When such pneumatic output signals are later converted to

electronic, such conversion will occur as close as practical to the pneumatic instrument. Some of the instruments in the HWVP will be powered, monitored and/or controlled by the HWVP Distributed Control System (DCS). Instruments and equipment will be specified for performance in the environment in which they will be located.

7.4.1.2 Power

All equipment and instrument systems will operate from 120 VAC, 60 Hz power, except when such instrumentation is impractical or unavailable. All instrumentation and the following equipment will be placed on standby and UPS power.

- Computers
- Alarms
- Process instrumentation and controls
- Exhaust airflow controls/monitors
- Continuous air monitors (CAMS)
- Stack and effluent monitoring equipment
- Mixing in some vessels
- Process offgas system

Instruments/Equipment on UPS

These will also be on standby power because UPS is backed up with standby power.

Computers
Alarms
Process Instrumentation

7.4.1.3 Electrical Noise Susceptibility

Electrical instruments and equipment will be tested or certified for RFI susceptibility in accordance with SAMA PMC 33.1.

7.4.1.4 Instrument Locations

The rooms and areas of the HWVP are designated by HVAC zones. Each zone corresponds to an expected level of radiation background and/or contamination. Instruments and equipment will not be located in Zones I and II unless absolutely necessary. The following table will be used in specifying finishes and minimum enclosure categories.

See "Color" Subsection 7.3.2.2 for color of finish to be specified.

Zone I: Specific applications will be determined in detailed design.

Zone II: NEMA 4X, Watertight, Corrosion Resistant

Zone III: NEMA 1, General Purpose

Zone IV: Not Zoned

Outdoor: NEMA 4, Weatherproof

7.4.2 Instrument Selection

The instrument selection criteria provided in this Design Guide describe the "default" instruments to be specified. Default instruments are listed to indicate the acceptable quality standards established for the Project. Selection of specific instruments will be based on all aspects of the application and environmental requirements. Instrument types other than the default instrument will be investigated and selection will be determined in detailed design. Careful consideration shall be given to "Smart Transmitters. Careful consideration also shall be given to indicating transmitters for transmitters outside Zone 1.

Provision shall be made for calibration and testing of instruments without removing or lifting leads.

Instruments identified as "Safety Class 1 or 2" on flow diagrams will be specified in accordance with this section and safety requirements. In-line "Safety Class 1 or 2" instruments will be specified with flanged or welded connections.

7.4.2.1 Temperature Instruments

7.4.2.1.1 Temperature Controllers - Electronic

7.4.2.1.1.1 Design Requirements

Temperature Controller will accept thermocouple and/or two (2) or three (3) wire RTDs. Controller will have built-in leadbreak protection.

Control modes will include on-off and PID, with adjustable bandwidth, manual reset, and optional remote setpoint input.

Proportional gain will be adjustable from zero to 100%. Integral and derivative action will be adjustable and non-interacting.

Temperature process variable and setpoint will be displayed in degrees Fahrenheit on the controller face as specified.

Accuracy to ±0.5% of full scale will be provided.

Output of 4-20ma with optional alarm and auxiliary relay outputs will be available.

7.4.2.1.2 Temperature Controllers - Pneumatic

7.4.2.1.2.1 Design Requirements

The temperature controllers will be field-configurable for direct or reverse action.

A change in measured temperature will provide a change in the internal circuitry to the set point. The controller will produce a high volume pressure output signal which varies in proportion to the change in input deviation and rate from the set point value.

Controllers will provide an optional remote pneumatic set point input (3.0 to 15.0 psig) with indication of set point, process variable, and output signal in scaled units.

Proportional gain will be adjustable from zero to 100%. Proportional plus integral reset will be adjustable.

Controller will be compatible with instrument air supply pressure of 20.0 psig and remote set point and output signal to final element of 3.0 to 15.0 psig.

Temperature process variable and set point will be displayed in degrees Fahrenheit on the dial face as specified.

Filter regulator and 0.0 to 30.0-psig output air supply gauge will be provided.

Instrument air connections will be 1/4-inch compression fittings.

7.4.2.1.3 Temperature Transmitters-Pneumatic

7.4.2.1.3.1 General

Pneumatic temperature transmitters will be furnished as follows:

- Transmitter will be equipped with Class IIIB filled bulb sensor.
- Threaded connections will be in accordance with ASME B1.20.1.

7.4.2.1.3.2 Design Requirements

Pneumatic room temperature transmitter will measure temperature with a filled system element and will transmit 3.0 to 15.0-psig proportional signal.

Variable span and zero adjustments, accessible with screwdrivers, will be provided.

Transmitter accuracy will be within ±1.0% of span.

7.4.2.1.4 Temperature Transmitters - Electronic

7.4.2.1.4.1 Design Requirements

A thermocouple or platinum RTD element will be accommodated.

Accuracy will be within ±0.5% of span.

Output signal will be 4-20 mAdc.

Transmitters will have cold junction compensation. Electronics will be of modular construction and easily replaceable.

Field-selectable upscale/downscale burnout protection will be provided.

Conduit connection(s) will be 1/2-inch NPT.

Terminal strips will be provided for external connections.

Span and zero adjustments will be noninteracting and continuously adjustable.

Threaded connections will be in accordance with ASME B1.20.1.

7.4.2.1.5 Room Thermostats - Pneumatic

7.4.2.1.5.1 Design Requirements

Pneumatic thermostats will be furnished as field-configurable for direct or reverse action and be complete with an integral bi-metal temperature sensing element.

Proportional control will be adjustable from 1.0 to 3.0 psi/°F.

Each thermostat will provide 3.0 to 15.0-psig output air signal to final elements (i.e., damper positioner, valve actuator).

A concealed set point adjustment and visual indication of room air temperature over the operating range will be provided.

Instrument supply and output air connections will be barbed fittings for polyethylene tubing or brass double-ferrule compression fittings for 1/4-inch tube.

The body will be die-cast aluminum with a protective cover.

7.4.2.1.6 Room Thermostats - Electronic

7.4.2.1.6.1 Design Requirements

Thermostats will be wall-mounted with concealed adjustment and sensing elements providing an On/Off control mode.

Design range will be 40.0° to 100.0°F with a concealed Auto/Off selector switch and set point adjustment.

Integral single-pole double-throw, snap action (non-Mercury type) switch will be provided.

7.4.2.1.7 Bimetallic Thermometers

7.4.2.1.7.1 Design Requirements

Thermometer dials will be the recessed type and will be accurate to within ±1.0% of full scale. Overrange protection will be provided.

The stem will be 1/4-inch diameter stainless steel.

7.4.2.2 <u>Temperature Elements</u>

7.4.2.2.1 Thermowells and Test Wells

7.4.2.2.1.1 General

Thermowells and test wells will be furnished and manufactured in accordance with SAMA Standard RC 17-10.

In general, wells will be constructed for interchangeability among standard applications including thermocouples, RTD assemblies and bimetallic thermometers.

Well materials will be in accordance with ASTM A182, Grade F304L or F316 (stainless steel), and designed to ANSI B31.3.

7.4.2.2.1.2 Design Requirements

Wells will be machined from bar stock and surfaces contacting the process will be polished.

Flange process connections will be RF flanges in accordance with ANSI B16.5.

Threaded pipe connections will be in accordance with ASME B1.20.1 and socket welded connections in accordance with ANSI B16.11.

7.4.2.2.2 Thermocouples

Thermocouple assemblies will be fabricated of chromel constant an thermocouple wire for temperatures from -300°F to 1600°F.

The limits of error and designations for thermocouples will be in accordance with ANSI MC 96.1.

7.4.2.2.3 Duct-Mounted RTDs

Platinum elements with a resistance of 100.0 ±0.2 ohms at 32.0°F will be provided.

The RTD element will be in direct contact with the duct air.

A flexible stainless steel covered electrical lead cable and a terminal block will be provided.

The sensing element will be provided with a radiation shield and the remainder sheathed using stainless steel.

7.4.2.2.4 Wall-Mounted RTDs

These RTDs will have a platinum element housed in a wall-mounted enclosure with ventilation slots arranged to provide proper airflow and to prevent stagnation.

7.4.2.2.5 In-Cell RTD Assembly

In-cell RTD assemblies will consist of a platinum RTD, RTD housing and thermowell.

RTDs will be platinum wire-wound with a resistance of 100.0 ohms at 32.0°F.

Internal thread protection will be furnished for all wells.

7.4.2.3 <u>Pressure and Differential Pressure Transmitters</u>

7.4.2.3.1 Pressure Transmitters - Pneumatic

7.4.2.3.1.1 General

Transmitters will have a 3.0 to 15.0-psig output signal. Readily accessible span and zero adjustments will be provided.

Threaded connections will be in accordance with ASME B1.20.1.

7.4.2.3.1.2 Design Requirements

- Accuracy

  Within ±1.0% of span (zero and span shift will be less than 0.5% for an overpressure equal to the maximum allowable working pressure).

- Connections

  Supply and output connections will be 1/4-inch NPT.

- Materials of Construction

  Parts exposed to the process fluid will be 316 SS.

7.4.2.3.2 Pressure Transmitters - Electronic

7.4.2.3.2.1 General

Transmitters will have a two-wire with a 4-20 mAdc output and noninteracting zero and span settings.

Threaded connections will be in accordance with ASME B1.20.1.

7.4.2.3.2.2 Design Requirements

Transmitter accuracy will be within ±0.5% of calibrated span (including linearity and hysteresis).

Overpressure rating will be equal to at least two times full scale pressure range.

Parts exposed to the process will be 316 stainless steel.

Electrical conduit connections will be 1/2-inch NPT with terminal strips for wiring.

7.4.2.3.3 Differential Pressure Transmitters-Pneumatic

7.4.2.3.3.1 General

Transmitters will have a 3.0 to 15.0-psig pneumatic output signal between zero and full scale differential pressure input. Span and zero adjustments will be provided and be readily accessible.

Threaded connections will be in accordance with ASME B1.20.1.

7.4.2.3.3.2 Design Requirements

Transmitter accuracy will be within ±1.0% or less of calibrated span (including linearity, hysteresis and repeatability).

Maximum safe working pressure for the primary element will be at least 275.0-psig differential.

Connections will be 1/2-inch NPT or as specified.

Metal parts exposed to the process will be 316 stainless steel.

7.4.2.3.4 Differential Pressure Transmitters - Electronic

7.4.2.3.4.1 General

Differential pressure transmitters will be electronic with a 4-20 mAdc output signal.

Threaded connections will be in accordance with ASME B1.20.1.

7.4.2.3.4.2 Design Requirements

- Differential Pressure Transmitters

  Differential pressure transmitters will measure differential to within ±0.5% of span.

  Drift due to ambient temperature variations will not exceed 1.0%/100°F.

  Overpressure protection will be at least 200.0% of full scale.

  Zero and span will be field-adjustable.

  Pressure connections will be 1/4 inch-18 NPT female threads or 1/2 inch-14 NPT female threads with flange adapters.

Electrical conduit connection will be 1/2-inch NPT. Terminal strips will be provided for wiring.

- Low Differential Pressure Transmitters

  Low differential pressure transmitter will measure 0.1 inch of H^2O differential to within ±4.0% of actual differential pressure (including nonlinearity, hysteresis, and repeatability).

  Drift due to ambient temperature variations will not exceed 2.0%/100°F.

  Overpressure protection will be at least 200.0% of full scale. Transmitters will operate normally for static pressures up to 10.0 inches of water.

  Zero and span will be field-adjustable.

  Pressure connections will be 1/4 inch-18 NPT female threads or 1/2 inch-14NPT with adapter flanges. Electrical conduit connection will be provided for wiring.

7.4.2.4 Pressure Gauges

7.4.2.4.1 Design Requirements

Process gauge dial size will be 4-1/2-inch minimum and accurate to within ±0.5 percent full scale.

Receiver gauge elements will be calibrated to read zero (3.0 psig) and full scale (15.0 psig). Dials will be graduated to the range of the transmitter. Pointers will have a micrometer adjustment.

Pressure elements will be 316 stainless steel and internal movements hardened stainless steel.

Sockets and tips will be bottom-mounted and will be stainless steel for stainless steel bourdon tubes and brass for bronze bourdon tubes.

Tube ratings and overpressure protection will be at least 1.3 times maximum scale reading. Overload gauge stops may be provided.

Blowout protection will be provided on gauges in process service. Blowout protection requires rupture discs or blowout plugs.

Pulsation dampeners will be provided in pulsating service.

Diaphragm protectors, when required, will have 1.0 inch NPT screwed or flanged connections.

7.4.2.5 Flow Measurement

7.4.2.5.1 Rotameters

7.4.2.5.1.1 General

Rotameters will be vertically mounted as specified.

Designs will be for nonhazardous, general purpose (indoor) service, unless required otherwise.

7.4.2.5.1.2 Design Requirements

Scales, capacity, process fluid data and sizing will be checked for all rotameters in the service specified.

Metering tubes will be removable (range changes or cleaning) without removing the meter from the line.

Purge rotameters will have an integral flow switch, needle valve or differential pressure regulator as specified.

All meter parts (tube body materials, float materials and end fitting materials) will be manufacturer's standard unless specified.

Accuracy will be within ±2.0% from 10% to 100% of scale reading or as specified.

7.4.2.5.2 Magnetic Flowmeters

7.4.2.5.2.1 General

Magnetic flowmeters will be of the replaceable tube design. The output signal produced will be directly proportional to the liquid flow rate. Variations in fluid pressure, density or viscosity at the flow element will not affect the measured accuracy.

Continuous zero point stability (negligible zero point offset) will be a design characteristic of the flowmeters.

Electronics will be all solid-state and be easily replaceable, with converter in-place without removing the field wiring.

7.4.2.5.2.2 Design Requirements

Converters will be remote from the flow element, and either wall or pipe-mounted, as required. The design will measure

the ratio of flow signal to reference signal and will be identical for all flowmeters.

Accuracy: The accuracy of the flow element and converter will be within ±1.0% of full scale (defined by SAMA PMC20.1).

The converter will provide interchangeability so that flow elements may be used with another identical converter without affecting calibration.

Electrodes will be platinum.

Output signal will be 4-20mAdc (isolated) and linear to flow.

7.4.2.5.3 Positive Displacement Flowmeters/Totalizers

7.4.2.5.3.1 Design Requirements

The flow totalizer counter will count directly proportional to the liquid flow rate. Variations in fluid pressure, density, or viscosity at the flowmeter will not affect the measured accuracy.

The flow totalizer will have a separate manual preset counter that counts down to zero and actuates an electrical switch.

The flow totalizer counter gear train will be enclosed and will disassemble easily.

The flow totalizer accuracy will be within ±1.5% of flow rate.

Electrical conduit connection will be 1/2-inch NPT.

7.4.2.5.3.2 Materials of Construction

Flowmeter body and liner material will be compatible with the process fluid.

7.4.2.5.4 Vortex Flowmeters

7.4.2.5.4.1 General

Instruments will be tested and calibrated by the manufacturer, and, where gas or liquid used for calibration differs from the actual service fluid, conversion factors and sample calculations will be provided.

Flowmeter materials of construction will conform to the following ASTM specifications:

Stainless Steel (SS) Castings - ASTM A351, Grade CF8

Forgings - ASTM A182, Grade 316
ASTM A182, Grade 304L

7.4.2.5.4.2 Design Requirements

The vortex flowmeters will operate on 120 Vac, 60 Hz power and generate a 4-20 mAdc output signal linear with flow rate.

The 4-20 mAdc outputs of the flowmeter will correspond to zero and maximum flow rates required.

The combined accuracy of the sensor and electronics will be less than 2.0% of actual flow rate.

End connections and ratings will be in accordance with ANSI B16.5, where applicable.

Flowmeters will be designed to function in ambient conditions, and, when separate electronics and sensor mounting is required, the sensor and the electronics will be designed to function in the ambient conditions required for each.

7.4.2.5.5 Sight Flow Indicators

7.4.2.5.5.1 General

Sight flow indicator's bodies will conform to Specification ASTM A105, Forged Piping Components.

7.4.2.5.5.2 Design Requirements

Flange connections will be RF flanges in accordance with ANSI B16.5.

Sight glass will be made of borosilicate glass, installed with neoprene gaskets, and will be the "drip" type.

Pressure drop across the sight flow glass will be less than 0.5 psi for a flow of five gallons per minute.

7.4.2.5.6 Integral Orifice Assembly

7.4.2.5.6.1 General

Integral orifice assemblies for DP transmitters will be furnished in flow applications, as required.

Material of construction will conform to the following ASTM specifications:

Stainless Steel (SS) Castings - ASTM A351, Grade CF8
Forgings - ASTM A182, Grade 316
ASTM A182, Grade 304L

7.4.2.5.6.2 Design Requirements

Process connections will be 1/2 inch-14 NPT, unless otherwise required.

Metal parts exposed to process fluids will be 316 stainless steel.

7.4.2.6 Orifice Plates and Restriction Orifice

7.4.2.6.1 General

Plate dimensions will conform to the recommended dimensions table listed in API 2530 (AGA Report No. 3).

7.4.2.6.2 Design Requirements

Orifice plates and restriction orifices will be sharp-edged concentric type.

Flange-type restriction orifices will be of the paddle type.

Orifice plate bore will be to the nearest 0.005 inch for all sizes. The beta ratio will be between 0.2 and 0.7.

Orifice plates will be in accordance with ASTM A167, Grade F304 (stainless steel).

7.4.2.7 Level Instruments

7.4.2.7.1 Level Probes (Capacitance)

7.4.2.7.1.1 Design Requirements

Switch will be snap-acting DPDT rated at 5.0A at 120 Vac, 60 Hz (noninductive).

Electrical conduit connection will be 1/2-inch NPT.

Threaded connections will be in accordance with ASME B1.20.1.

Flanged connections will be in accordance with ANSI B16.5.

7.4.2.7.2 Level Displacement Transmitters/Controllers

7.4.2.7.2.1 General

Level controllers and transmitters will be two-wire electronic, external or internal float type.

Span and zero adjustments will be provided and easily accessible.

7.4.2.7.2.2 Design Requirements

Accuracy: Within ±1.0% of span.

Repeatability will be 0.2% of span or less.

Connections:

Flanged instrument connections will be to ANSI B16.5.

Threaded connections will be to ASME B1.20.1.

Electrical:

Outputs will be 4.0 to 20.0 mAdc.

Conduit connections will be 1/2-inch NPT. Screw terminal blocks will be used for wiring.

7.4.2.7.3 Pneumatic Level Probes

Two types of pneumatic level probes may be used in conjunction with differential pressure transmitters to determine the level, density, and pressure of fluids in tanks and sumps.

Instrument dip tubes will be used for most applications. Dip tubes assemblies will be three 1/2-inch pipes which enter vessels through a 2-inch flange. One pipe terminates just past the flange. The second pipe just reaches the bottom of the tank. It will have a 1/4" notch across half the diameter to allow air passage at the bottom. The second pipe entering the vessel will be 10 inches shorter than the one that reaches the bottom of the tank. Refer to Standard Cell CS-1 for differential pressure transmitter configuration.

The second type of pneumatic level probe will be used if air purge would promote caking on the level probe assembly. "Holledge"-type metallic diaphragms which use a similar pressure balance method will be used.

7.4.2.8 Gauge Glasses

7.4.2.8.1 Design Requirements

Minimum ratings for gauges will be 1,000 psig at 100.0°F unless specified. (Rating will be based on manufacturer's pressure-temperature charts.)

Protective shields will be provided on steam or condensate service at operating pressures above 250.0 psig. Kel-F or mica shields are acceptable and will be provided for applications involving corrosive fluids.

Connections of gauge glasses will be 3/4-inch NPT in accordance with ASME B1.20.1.

Gauge cocks will be offset body designs rated for 3000 psig at 100.0°F. The end connections will be 3/4-inch NPT, solid shank tank connection and 3/4-inch NPT spherical union gauge connection. Threaded connections will be in accordance with ASME B1.20.1.

7.4.2.9 Control Valves

7.4.2.9.1 General Selection Criteria

Control valves will be selected to provide maximum corrosion resistance for the gas or fluid service, radiation resistance, ruggedness, reliability, flexing, and splashing liquids. Where possible, piston-operated valves will be specified for on-off service, especially when the valve is locate in-cell. Within the process cell, control valves will be installed in jumpers.

Selected in-cell valves will be provided with impact operators designed for remote operation in case of actuator failure.

Control valves exterior to the cell will also be chosen for the reasons stated above. All control valves will be designed to fail to the pre-defined safe positions.

Control valves will be sized according to industry-accepted practices for liquid, gas and vapor service for the proper process conditions. Sizing will be confirmed by the selected vendor's computer program after award.

7.4.2.9.2 Globe Valves

7.4.2.9.2.1 General

The valve travel will be clearly and permanently marked to indicate stem position. A position indicator with a scale of zero to 100% open will be included.

The direction of flow will be permanently marked on the valve body.

Valves and actuators sizing will be verified for the service conditions and performance over the range of flows and pressures.

The material supplied will conform to the following ASTM specifications:

Carbon Steel (CS)	Castings-ASTM A216, GR WCB Forgings-ASTM A105
Stainless Steel (SS)	Castings-ASTM A351, GR CF8M Forgings-ASTM A182, GR F316 Forgings-ASTM A182, GR F304L

Seat leakage and testing will be in accordance with ANSI/FCI 70-2:

Normal - Class II - 0.1% of maximum valve capacity

Tight Shut-Off - Class IV - 0.01% of maximum valve capacity

Valves in radioactive service will be designed (offset body) not to trap or pocket the process fluid.

7.4.2.9.2.2 Design Requirements

- Single and Double Seated Valves

  Single seated valves will be top and bottom or heavy top-guided. Double seated valves will be top- and bottom-guided unless other types are specified. Single or double-seated valves, having top and bottom guides, will have interchangeable bonnet and bottom flanges, and be constructed to permit reversal of valve action without additional parts or alterations. Valves will be leakproof in any orientation of the stem.

  Valves will be equipped with bolted gland followers and bonnets will be bolted.

Stems will be threaded and pinned to the valve plug.

Seat rings will be threaded and will have lugs for removal.

Valves will be flanged, socket-welded, or butt-welded. Face dimensions will be in accordance with ANSI B16.10 or ISA S75.04 as specified.

- Cage-Guided Globe Valves

Cage-guided valves will change the flow by replacing the cage. Hardened trim materials will be 316 stainless steel or as specified. Valve will be leakproof in any orientation of the stem.

Compression gaskets used between the seat ring and body web will not be subject to inner valve seat ring loading and unloading.

Stem will be threaded and pinned to the valve plug.

Valves will be flanged, socket-welded, or butt-welded. Face dimensions will be in accordance with ANSI B16.10 or ISA S75.04 as specified.

- End Connections

Socket weld connections will be in accordance with ANSI B16.11.

Flange connections will be in accordance with ANSI B16.5.

Butt-weld connections will be in accordance with ANSI B16.25.

- Valve Actuators

<u>General</u>

Valve actuators will be sized to handle the maximum differential pressure specified.

Selected in-cell motor-operated and manual valves will be provided with impact operators designed for remote operation.

Position will be indicated on a reversible scale with the words "OPEN" and "CLOSED" at the stem limits and will indicate intermediate positions.

A stop, with sufficient area to absorb the maximum force of the actuator, will be provided at "OPEN."

The valve plug will seat before the actuator reaches its travel limit at "CLOSE."

Threaded connections will be in accordance with ASME B1.20.1.

Spring and Diaphragm Actuators

Springs and diaphragms will be fully enclosed and springs will be corrosion-resistant.

Springs will stroke valves over the range of 3.0 to 15.0 psig. Actuator overpressure will be 35.0 psig.

Valve positioners and/or solenoids (spring and diaphragm) will be side-mounted.

Piston Actuators

Springs and pistons will be fully enclosed.

Spring ranges will stroke over the valve range. Overpressure rating of the actuator will be generally 150.0 psig for nominal 100.0-psig stroke.

Piston actuators will be integrally mounted and piped and will not require external lubrication.

An external air volume tank will be provided, if required, for fail safe operation. Capacity will be for at least three full cycles of the valve.

- Accessories

Pneumatic piping will be 1/4 inch copper or stainless steel with brass or stainless steel compression fittings of the double-ferrule type.

Valve Positioners

Positioners will be provided with supply, input, and output gauges.

Valve positioners will have built-in bypass, except as specified (e.g., reverse action, split range).

Filter-Regulator

Filter-regulator airsets will be mounted and piped on valves requiring positioners or pressure pilots.

Airsets will include an integral output air gauge unless a supply air gauge is provided.

Airsets will be metal construction, provide internal relief, and sized to stroke the associated valve.

Solenoid Valves

Solenoid valves will be mounted and piped to the control valve, when specified.

The solenoid valves will be three-way (or four-way) as specified, switching and direct acting. Valves will be ported to produce the valve failure action required in the deenergized state.

Automatic reset or manual reset will be provided as specified.

Coil will be molded Class H designed for continuous operation at ambient temperature.

Instrument port connections will be 1/4-inch NPT and electrical conduit 1/2-inch NPT.

Threaded connections will be in accordance with ASME B1.20.1.

Solenoid body will be brass in accordance with ASTM B16 unless specified otherwise. Internal parts will be stainless steel.

Valves in service with 80.0-psig piston-actuated valves will be rated for an instrument air supply pressure of 150.0-psig maximum.

Limit Switches

Limit switches will be mounted on the control valve where specified.

Switches will have a separate double-pole, double-throw switch for open and closed positions.

Limit switches wiring will be 3/4-inch NPT conduit connection. Wiring will terminate on screw terminals.

Threaded connections will be tapered in accordance with ASME B1.20.1.

Lubricators

Lubricators will be provided.

Handwheels

Handwheel assemblies, where specified, will provide for a normal tangential force to the wheel sufficient to operate the valve against the maximum pressure drop.

Automatic Locking Valves (for Failed Locked Action)

Where "locked" failure position is specified, an automatic valve will be furnished to shut off the air signal to the valve upon dropping of air supply below an adjustable set pressure (between 50.0 to 80.0 psig for on/off valves and 20.0 to 40.0 psig for throttling valves).

7.4.2.9.3 Ball Valves

7.4.2.9.3.1 Design Requirements

Ball valves will be designed for 90° rotation of the ball by a totally enclosed linkage.

Valves will provide full open port (port equal to line size) unless otherwise specified.

Valve will be leakproof in any orientation of the stem.

Spline-type connections will be provided between main shaft and control linkage.

See Globe Valves for the following specifications:

End Connections
Valves Actuators
Spring and Diaphragm Actuators
Piston Actuators
Accessories
Solenoid Valves
Limit Switches
Lubrication
Handwheels
Automatic Fail

7.4.2.9.4 Butterfly Valves

7.4.2.9.4.1 Design Requirements

- Valves will be designed for 90° rotation of the disc provided by a totally enclosed linkage.
- Valve connections will be wafer (web/sandwich) type and have face dimensions in accordance with ISA S75.04.
- Valves will be full open port (port equal to line size) unless otherwise specified.
- Valves will be designed with one piece shaft with the disc pinned to the shaft. Shaft will withstand full peak actuator torque without damage to the valve. Bearings will be designed for vertical or horizontal installation.
- Bonnets will be bolted type unless otherwise specified. Valve will be leakproof in any orientation of the stem.

7.4.2.9.4.2 Butterfly Damper Valves

- Damper valves will be designed for 90° rotation of the disc.
- Dampers will be full port (port equal to line size) unless otherwise specified.

7.4.2.9.4.3 Valve Actuators

- Threaded connections will be in accordance with ASME B1.20.1.
- Sizing (See Globe Valves).
- Stops (See Globe Valves).

7.4.2.9.4.4 Actuators (See Globe Valves)

- Accessories (See Globe Valves)
- Regulator/Filter (See Globe Valves)
- Solenoid Valve (See Globe Valves)
- Limit Switches (See Globe Valves)
- Lubrication (See Globe Valves)
- Handwheels (See Globe Valves)

7.4.2.9.5 Self-Actuated Pressure Regulators

7.4.2.9.5.1 General

The pressure regulators will be self-contained or pilot-operated and have adjustable set point capability. Direction of flow will be permanently marked on the valve body.

The capacity of the regulators will be selected based on a 10% offset or droop factor unless otherwise specified.

Regulators will meet noise limits as specified.

Sizing will be verified for service conditions and valve performance over ranges of flow, pressure, and temperatures given.

Where tight shut-off is required, regulators will meet seat requirements of ANSI FCI 70-2.

Body and plug material will conform to ASTM A182, GR F316 for forgings and ASTM A351 GR CF8M for castings.

7.4.2.9.5.2 Design Requirements

Self-actuated pressure regulators will provide stable operation under all pressure, flow, and temperature conditions specified.

Threaded connections will be in accordance with ASME B1.20.1 and flanged connections as specified in ANSI B16.5.

7.4.2.9.6 Self-Actuated Temperature Regulators

7.4.2.9.6.1 General

Temperature regulator valves will be equipped with vapor-filled thermal sensors with armored capillary tubes.

Pressure regulators will be adjusted to the pressure specified. Manufacturer's standard thermowell will be supplied with the regulator valve and will be stainless steel construction, 150 psi RF flanged connection.

7.4.2.9.6.2 Design Requirements

Valve body and plug material will be 316 stainless steel and conform to ASTM A182, GR F316 for forgings and ASTM A351, GR CF8M for castings.

Valves will be limited to 2.0-inch size and have raised face flanged connections with 150 psi rating in accordance with ANSI B16.5.

Threaded connections will be in accordance with ASME B1.20.1. Flanged connections will be in accordance with ANSI B16.5.

7.4.2.9.7 Damper Control Operators

7.4.2.9.7.1 Design Requirements

The required actuator size for each damper will be provided in accordance with HWVP positioner design specifications:

Type: Pneumatic positioners (3.0 to 15.0 psig) will be force or motion balance type.

Mounting and Tubing: Integral or side-mounted for cylinders and side-mounted for spring-opposed diaphragm actuators mounted with 3/8" O.D. stainless steel tubing. Tubing fittings will be compression type.

Electro-pneumatic converters will be required when a positioner or actuator is in an electronic control loop.

Mounting: Damper converters will be mounted on damper actuators.

Input: 4-20 mAdc

Regulators will have a span of 10.0 psi for a 180° rotation of the control knob and will have a display reading of zero to 100%.

7.4.2.9.8 Current/Pneumatic Converters

7.4.2.9.8.1 Design Requirements

Converter outputs will be linear pressure (3-15 psig) for an input signal of 4-20 mAdc. Outputs will not change more than 1.0% for a 5.0 psi change in supply pressure. Converter will be accurate to 2.0% of output range.

The converter will be selectable for direct or reverse acting.

Zero and span adjustments will be concealed and each adjustment provided with a lock.

Supply and output pressure connections will be 1/4-inch NPT female in accordance with ASME B1.20.1. Electrical conduit connection will be 1/2-inch NPT.

7.4.2.9.9 Pneumatic/Current Converters

7.4.2.9.9.1 Design Requirements

Converter outputs will be linear 4-20 mAdc for an input signal of 3.0 to 15.0 psig. Converter output will be accurate to within ±0.5% of input.

Zero and span adjustment will be concealed and each adjustment provided with a lock.

Input pressure connections will be 1/4-inch NPT female. Electrical conduit connection will be 1/2-inch NPT. Threaded connections will be in accordance with ASME B1.20.1.

7.4.2.10 Pressure Relief Valves

7.4.2.10.1 General

Pressure relief valves will be in accordance with ASME Boiler and Pressure Vessel Code, Section VIII.

ASME Code valves will be fabricated by a manufacturer with a valid Certificate of Authorization from the ASME Boiler and Pressure Vessel Committee.

Material supplied will conform to ASTM specifications as follows:

Carbon Steel (CS)	Castings-ASTM A216, GR WCB Forgings-ASTM A105
Stainless Steel (SS)	Castings-ASTM A351, GR CF8M Forgings-ASTM A182, GR F316, or GR F304L

7.4.2.10.2 Design Requirements

Pressure Relief Valves will be spring-loaded, high-capacity designs with top-guided disc.

Valve bodies and joints will meet the pressure and temperature ratings for the specified inlet and outlet flange sizes in accordance with API Standard 526, Tables 1 through 14.

Flange connections will be in accordance with ANSI B16.5.

Threaded connections will be in accordance with ASME B1.20.1.

Socketwelded connections will be in accordance with ANSI B16.11.

Valves will be of plain closure bonnet construction, unless otherwise specified.

Body, bonnet material, dimensions and spring material will be in accordance with API Standard 526. Bonnet will be of the same material as the body.

Nozzle and disc material will be of Type 304 or 316 stainless steel, monel, or as specified.

Seat leakage will be in accordance with API Standard 527. For relief valves not to Standard 527, such as "soft seats," seat leakage testing will be in accordance with manufacturer's procedures.

7.4.2.11 Steam Traps and Drainers

7.4.2.11.1 General

Steam traps will be inverted bucket, float, thermostatic or thermodynamic as specified.

Inverted bucket traps will have socket weld end connections and sockets will be in accordance with ANSI B16.11.

Float, thermostatic and thermodynamic traps and continuous drainers will have connections in accordance with ASME B1.20.1 or ANSI B16.5.

Thermodynamic traps will be disc type and suitable for installation in any position.

The thermostatic element of the float and thermostatic trap will discharge air and noncondensibles.

Continuous drainers will be float designs with equalizing connections.

7.4.2.11.2 Design Requirements

Inverted bucket traps will have heat-treated, chrome steel valve seats and stainless steel bodies.

Float and thermostatic traps will be cast semi-steel with the thermostatic element stainless steel.

Thermodynamic traps will be all stainless steel construction.

Continuous drainers will be of forged steel or cast stainless steel with stainless steel trim as specified.

7.4.2.12 Solenoid Valves

7.4.2.12.1 General

Solenoid valves will be tested to the ranges specified.

Coils will be suitable for continuous energized duty without effect on the performance of the valve.

Tight shut off, body, and trim materials will be supplied as specified.

Failure position (deenergized condition) will be clearly indicated on the valve.

7.4.2.12.2 Design Requirements

Watertight metal enclosures will be provided with 1/2-inch NPT conduit hub.

Class H epoxy encapsulated molded coils will be supplied unless otherwise specified.

Threaded connections will be in accordance with ASME B1.20.1.

7.4.2.13 <u>Process Switches</u>

7.4.2.13.1 Level Switches

7.4.2.13.1.1 Design Requirements

Process parts will be 316 stainless steel unless otherwise specified.

Switch will be double-pole, double-throw (5.0 amp minimum resistive) with set point field adjustable.

Threaded connections will be tapered in accordance with ASME B1.20.1.

7.4.2.13.2 Differential Pressure Indicators and Switches

7.4.2.13.2.1 General

Differential pressure indicators/switches will be bellows design for high differentials and diaphragm design for low differentials (designed for direct process connection).

Low pressure units are those not used with maximum pressure greater than 25.0 psi on either side of the sensing element.

7.4.2.13.2.2 Design Requirements

- General Performance

  <u>Reference Accuracy</u> - Accuracy of measurement will be 1.0% of span for high differential and 3.0% of span for low differential units.

Overpressure - Calibration shift will be less than 0.5% (high differential units) at the maximum overpressure of the primary element.

Repeatability - Set points will be repeatable to less than 0.5% of span (high differential units) and 2.0% of span (low differential units).

- Process Connections

  Connections will be 1/2- and 1/4-inch NPT for high and low differential units, respectively.

- Threaded connections will be in accordance with ASME B1.20.1.

7.4.2.13.2.3 Electrical Requirements

Switch - 5.0 amps at 120 volts ac minimum (DPDT).

7.4.2.13.3 Pressure Switches

7.4.2.13.3.1 General

Field set point adjustment over the operating range will be provided.

7.4.2.13.3.2 Design Requirements

Set point will be by internal screw adjustment.

Switch will be snap-acting double-pole, double-throw rated for 5.0 amps at 120 Vac.

Set point repeatability will be 2.0% or less full scale.

Set point differential will be fixed and not more than 3.0% of setting.

7.4.2.13.4 Temperature Switches (Filled)

7.4.2.13.4.1 General

Field set point adjustment will be provided over the full range of the switch specified.

7.4.2.13.4.2 Design Requirements

Temperature switches will be nonindicating vapor or fluid-filled complete with sensing bulb, thermowell, and capillary as specified.

Switch will be snap-acting double-pole, double-throw rated for 5.0 amps at 120 Vac.

Set point repeatability will be 2.0% or less throughout set point range.

Set point differential will be fixed and not be more than 3.0% of the switch setting.

Switches subject to inadvertent operation due to shock or vibration will not be used.

Thermowells will be 304 Stainless Steel or as specified.

Capillary and union will be 300 Series stainless steel.

7.4.2.13.5 Flow Switches

7.4.2.13.5.1 Design Requirements

Flow switches will be swing vane and designed for pipe mounting.

Conduit connections will be 3/4-inch NPT and flange connections will be RF flanges in accordance with ANSI B16.5.

Threaded connections will be in accordance with ASME B1.20.1.

Switches will be double-pole, double-throw, contacts rated at 5.0 amps minimum at 120 Vac.

Proof pressure will be at least 150% of the maximum design pressure.

7.4.2.13.6 Level Switches (Conductivity)

7.4.2.13.6.1 General

Conductivity level probes will be furnished with the switching range to include the set point.

7.4.2.13.6.2 Design Requirements

Switches will be snap-acting double-pole, double-throw rated for 5.0 amps minimum at 120 Vac.

Electrical conduit connection will be 1/2-inch NPT.

Threaded connections will be ASME B1.20.1.

Flanged connections will be in accordance with ANSI B16.5.

7.4.2.14 Analyzers

7.4.2.14.1 pH Analyzers

7.4.2.14.1.1 General

General pH analyzers will perform continuous analysis of pH in liquid streams.

7.4.2.14.1.2 Design Requirements

Transmitters will be supplied with an indicator scaled to actual pH. The transmitter will be a 2-wire 4-20 mAdc.

Temperature sensing will provide automatic continuous temperature correction. The sensor will allow the sensor to be installed and removed without shutting down the process.

7.4.2.14.2 Nitrogen Oxide Analyzers

7.4.2.14.2.1 General

NOx analyzers will use a photometric detector to perform continuous dry analysis of total oxides of nitrogen in gas mixtures.

An overcurrent protection device will be provided and local disconnect switches will allow analyzers to be serviced.

7.4.2.14.2.2 Design Requirements

Meters will be in PPM units with selector switch to change range.

Analyzer outputs for local recorder, CCR, and field operating stations will be provided and be compatible with DCS and H.P. system interfaces.

Sample conditioning and stream selection designs will provide representative process samples with a minimum lag time.

7.4.2.14.3 Carbon Monoxide Analyzers

7.4.2.14.3.1 General

Carbon monoxide analyzers of the nondispersive infrared type will be provided.

Analyzers will have overcurrent protection and provide disconnect switches for instrument service.

7.4.2.14.3.2 Design Requirements

Analyzer outputs to DCS control rooms and HP monitoring stations will be compatible with these HWVP system interfaces.

Analyzers will be suitable for panel mounting.

7.4.2.14.4 Moisture Analyzers

7.4.2.14.4.1 General

Moisture analyzers will perform continuous measurement of water in gaseous streams or dry-gas atmospheres.

7.4.2.14.4.2 Design Requirements

Analyzer probe will be in-line with 3/4-inch NPT connection.

Signal cable from probe to transmitter will be at least 50 feet long.

Analyzer will have dew point range of -110 to +70°F. Dew point will be indicated on face of the transmitter.

Analyzer transmitter output will be 4-20 mAdc.

7.4.2.15 Local Instruments

7.4.2.15.1 Local Indicators/Meters

7.4.2.15.2 Design Requirements

Local electronic indicators will be designed for use with two-wire transmitters with input signals of 4-20 mAdc.

Indicator accuracy will be within ±2.0% of span.

Scaling will be zero to 100% linear unless otherwise specified.

A meter-zero screwdriver adjustment will be provided.

7.4.3 In-Cell Instrumentation

The process will require some instrumentation to be located within the cell. Because of the harsh environment and need for maintenance, this instrumentation will be minimized. Some instruments that will be located in the cell are resistance temperature detectors (RTDs), magnetic-type flowmeters, and orifice plate-type meter runs. In-cell process instruments will usually be specified in a separate specification.

7.4.4 HVAC Instrumentation

No HVAC instrumentation will be located in-cell. Room thermostats, damper control operators and other HVAC instrumentation will be specified in accordance with process conditions. Commercial-grade equipment will be specified if appropriate to meet operational needs.

7.4.5 Health Protection Instrumentation

The Health Protection System consists of a wide variety of sensors, monitors, processors and operator interface equipment. In this section, the requirements for those instruments that actually monitor radioactivity levels are discussed. See Subsection 7.4.9 for information regarding multiplexer, processor and operator interface design. The Health Protection instrumentation will be specified in accordance with the FDC and the TDP. Airborne radioactivity monitors will meet the requirements of ANSI N42.18 and N13.1. Health Protection instrumentation will include stack monitoring instruments and equipment.

7.4.5.1 General Specification of Performance

The health protection radiation instruments are specified in accordance with ANSI N42.18. The following requirements are specific to the HWVP Project.

7.4.5.1.1 Range

Unless specifically noted, the display of the instruments will cover the dynamic range from 1 to 10^6 counts per minute

7.4.5.1.2 Sensitivity

The sensitivity of an effluent monitoring system should be stated in terms of a signal count rate associated with a specific nuclide detectable at the 95% confidence level in the presence of a uniform background field of 2 mR/hr at 0.662 MeV.

7.4.5.1.3 Temperature

Regardless of the temperature of the effluent stream, the instrument system should be capable of operating with less than 5% change in calibration or response over a temperature range of 0 to 60°C.

7.4.5.1.4 Humidity

The instrument will be capable of continuous operation in relative humidities of 10 to 95% within the accuracy required.

7.4.5.1.5 Power Requirements

Voltage and frequency variations of ± 15% within the design values will result in reading variations of no greater than ± 5% at the minimum detectable level.

7.4.5.1.6 Electrical Effects

Radio frequency and microwave signals of ≤ 10μW/cm^2 will result in reading variations of no greater than ± 5% at the minimum detectable level.

7.4.5.1.7 Mechanical Effects

Accelerations of ≤ 1 g in each of three mutually orthogonal axes over the frequency range 1 to 33 Hz will result in reading variations of no greater than ± 5% at the minimum detectable level.

7.4.5.1.8 Radiation Alarm

The instrument system will be equipped with an alarm capable of being externally set to annunciate at any point over the stated range. The alarm should be both audible and visible and should be capable of adjustment and reset by authorized personnel without removing the instrument from service.

7.4.5.1.9 Failure Alarm

The instrument will be equipped with an alarm device that provides appropriate notification at any time the system is incapable of monitoring radiation. A latching contact will be provided to indicate loss of signal detector operating voltage or circuit power.

7.4.5.1.10 Calibration

A thorough primary calibration of the entire system will be performed at least once using a radionuclide (liquid, solid, or gaseous) of known concentration. The radionuclide will permit calibrating the range of energy and rate capabilities intended for the system. Traceability to the NBS will be maintained. The calibration will be related to a secondary source or method which will be used for periodic in-plant recalibration. The source-to-detector geometry will be maintained identical to that established during the primary

calibration. The surface dimensions of the secondary source will be the same as the detector window.

Flow-rate-measuring devices associated with the system will be calibrated to determine actual flow rate at the conditions of temperature and pressure under which the system will be operated. These flowrate devices will be periodically recalibrated.

A check source that is actuated locally or remotely should be installed for integrity checks of the detector and the associated electrical system. A calibrated electrical signal should be provided to verify the circuit alignment.

7.4.5.2 Personnel Contamination Monitors

7.4.5.2.1 Body Friskers

The Body Frisker (BF) consists of fifteen (15) gas flow proportional detectors, an ultrasonic motion sensor, a photoelectric occupant sensor, a microcomputer, support hardware and an automatic change-over P-10 gas supply system. Counting is a two step process where one side of an individual is counted and then the other. The detectors are positioned for optimal detection of contamination and any positive results are noted on the alphanumeric display. A personnel interlock shall be provided that consists of a set of switches that are actuated by the user to ensure that both sides of the person are monitored. In addition, a foot sensor shall be provided that correctly positions the foot in the detector before the counting commences.

The monitor shall count background conditions by the weighted average approach when not in use by plant personnel. This shall be used to compensate for background levels. The monitor shall automatically compensate for background.

Both data and trouble alarms shall be provided. Trouble alarms shall be isolated from data alarms, and both shall be annunciated audibly and visually. Trouble alarms shall include:

- Low gas pressure
- Low count rate per detector
- High count rate per detector
- High background

7.4.5.2.2 Hand and Foot Monitors

The hand and foot monitors (HFM) shall be specified as an integrated unit for the simultaneous monitoring of both hands and both feet. The monitor shall use six (6) independent

detectors for both alpha and beta/gamma radiation detection, one for each foot and each side of each hand. Each detector shall be a proportional counter that uses P-10 gas. Gas flow lines shall be provided with flow indicators and regulators. The HFM shall be automatically switched over to a second gas bottle when the first becomes depleted. Gas bottles shall be physically contained within the HFM.

The monitor shall count background conditions when not in use by plant personnel. A weighted average approach shall be used to compensate for variable background levels. This background level shall be subtracted from the counts obtained during personnel monitoring.

Three types of operation shall be selectable, with the alarm level, or counting time, or both. Alarm indication shall be both visual by a red indicator light visible. An alpha-numeric display shall indicate which sensor caused the alarm.

Low counting-gas pressure, low or high count rate failure on any detector, or high background count shall cause a yellow trouble indicator light similar to the alarm indicator to light. Audible trouble indication shall be the same as alarm indication.

7.4.5.2.3 Portal Monitors

The portal monitor (PM) shall be specified as a free standing device containing at least eleven (11) independent detectors to include four (4) on each side, two (2) on the bottom and one (1) on the top. The monitor shall be self-initiating when personnel enter the portal. Each detector shall be a proportional counter that uses P-10 gas. Gas flow lines shall be provided with flow indicators and regulators. The PM shall automatically switch over to a second gas bottle when the first becomes depleted. Gas bottles shall be physically contained within the PM.

The monitor shall count background conditions when not in use by plant personnel. A weighted average approach shall be used to compensate for variable background levels. This background level shall be subtracted from the counts obtained during personnel monitoring.

The monitor shall allow either walk-through or stop-count-go operation. Alarm indication shall be produced by a high count from any detector and shall be both visual by a red indicator light, and audible by a horn. A display shall indicate which sensor caused the alarm.

Low counting-gas pressure, low or high count rate failure on any detector, or high background count shall cause a yellow trouble indicator light similar to the alarm light. Audible trouble indication shall be the same as alarm indication.

7.4.5.3 Ratemeters

Local processing shall be accomplished with microprocessor based ratemeters. The ratemeters shall be located throughout the HWVP facility to receive measurement signals from detectors, annunciate local alarms, and communicate data to the HPCS multiplexers, and subsequently to the host computers, consoles and terminals. Ratemeters shall have the capability for annunciating Hi, Hi-Hi, rate-of-change and hardware/software failure alarms. The ratemeters shall convert input measurements to engineering units, provide short-term data storage, and time tagging of alarms. The units shall be provided with two 4-20 ma analog data outputs or with one 4-20 ma output and one serial computer interface.

7.4.5.4 Area Radiation Monitors

7.4.5.4.1 Operating Range Area Radiation Monitors

Area Radiation Monitors (ARMs) consist of detectors with local microprocessor based ratemeters which include readouts, failure, high and high-high alarms with audible and visual annunciation; radioactive sources or electrical signals to provide a positive test of the complete monitoring channel, and a 4-20 ma analog output and/or a serial computer interface with the MUX. The high level alarms are provided with contact closures which can be used for interlocks or warning signs on the access doors to their locations.

Radiation levels above established HPS alarm points are annunciated audibly and visually. Activity levels from the ARMs are continuously fed to the HPCS where they are evaluated against the existing data base and displayed. In addition, data from specified units are transferred to the DCS and to the Management Information System (MIS) for archival purposes.

7.4.5.4.2 High Range Area Radiation Monitors

The characteristics of these instruments are essentially the same as those shown above for the operating range ARMs. The differences are shown immediately below.

These instruments shall be provided with a minimum of eight decades of dynamic range from .01 mR/hr to 1000 R/hr. This range may be met by the use of multiple detectors as long as the switching between detectors is automatic and transparent

to the user. Although these are not safety class monitors, they are required to operate after a DBA. Thus, they must be provided with shock mounts.

The ratemeters are not located with the detectors as they are with the operating range units described above. Local level displays, as well as audible and visual alarms shall be located with the detectors.

7.4.5.5 Airborne Activity Monitors

The airborne activity monitors consist of Record Air Samplers (RASs), beta/gamma sensitive Continuous Air Monitors (CAMs), alpha/beta sensitive CAMs which are either fixed or mobile, and Continuous Airborne Effluent Monitors (CAEMs).

7.4.5.5.1 Record Air Samplers

The RAS will consist of a fixed circular filter approximately 2.0 inches in diameter, contained in a sealed, quick disconnect filter holder, a flow meter with high/low flow alarms and a flow regulator.

A central vacuum system is employed to draw air through the filters at a constant velocity. Flow alarms are audibly and visually annunciated locally and repeated in the CCR, the HPCR, at the HPCS consoles and terminals. Flow regulation is achieved through the use of a critical orifice supplied as part of the HP vacuum blower system.

7.4.5.5.2 Beta/Gamma Continuous Air Monitors

The beta/gamma CAMs are identical to the RASs described above, except they are provided with a Pb shielded, beta/gamma sensitive, plastic scintillation detector and a microprocessor based count ratemeter with fail, high and high-high alarms.

The central vacuum system is employed to draw air through the filters at a constant velocity at 2.2 cfm up to a maximum pressure drop of 6 inches of Hg. Flow alarms are audibly and visually annunciated locally and repeated in the CCR, the HPCR, at the HPCS consoles and terminals. Flow regulation is achieved through the use of a critical orifice supplied as part of the HP vacuum blower system.

7.4.5.5.3 Alpha/Beta Continuous Air Monitors

In addition to all of the equipment described above for the beta/gamma CAMs, these units also include a completely separate alpha sampler. The alpha CAMs also include circuitry for background subtraction of radon-thoron (Rn-Tn) activity.

They have the same type ratemeter and alarms as the beta/gamma sensitive CAMs.

7.4.5.5.4 Mobile Continuous Air Monitors

The mobile CAMs are the same as the alpha/beta units described above except that they are mounted in movable carts and have integral vacuum pumping systems.

Mobile CAMs may be used to monitor the down stream side of HEPA filters (at the DOP testing ports) or the discharge side of specific air ducts. In this case, the heads are designed to take an isokinetic sample and they are provided with an isokinetic sampling system.

The flow control system consists of stainless steel piping, a positive displacement pump, a controller, a motorized ball valve and a flow meter with alarms. The motorized ball valve alters the velocity of the sample entering the probe and thus, through the filter while maintaining the design capacity of the pump.

7.4.5.6 Continuous Airborne Effluent and Nox Monitors

Redundant safety class 1 CAEMs are consist of isokinetic control panels, stack monitoring equipment, integral constant flow vacuum pumping systems and nitrogen oxide (NO_x) monitors. All of this equipment is safety class 1 except the NO_x monitors which are non-safety class. The stack monitoring equipment consists of three isokinetic streams. The first isokinetic stream has a beta/gamma CAM in series with an iodine 129 monitor. The second isokinetic stream has an alpha/beta CAM in series with a tritium monitor. Finally, a third isokinetic stream consists of a RAS followed by a NO_x monitor. Redundant safety class 2 CAEMs are identical to the CAEMs Safety Class 1 CAEMs except they do not contain NO_x monitors. CAEMs are located at the final release point (duct or stack) to insure that the ALARA standards within the plant are maintained and that there are no adverse effects on the environment.

7.4.5.6.1 Isokinetic Sampling and Flow Control Systems

An isokinetic sample is taken from the duct or stack and sequentially monitored for particulate and iodine. The isokinetic sampling equipment and the flow control system are identical to that described above for the mobile CAMs. The air flow through this system shall be provided by integral vacuum pumping systems which are identical to those used on the mobile CAMs.

7.4.5.6.2 Continuous Air Monitors

There are alpha/beta and beta/gamma particulate monitors provided with the CAEMs. These units are mounted in parallel and they are identical to those described above with the mobile CAMs.

7.4.5.6.3 Iodine-129 Monitors

The iodine monitors use an activated charcoal filter which is impregnated with potassium iodide (KI). The filter is continuously monitored by a scintillation detector. The microprocessor based ratemeter provided with this channel contains an analyzer that is tuned to the 40 Kev X-ray line associated with ^{129}I. This unit has all of the alarms described above for the CAMs except for an additional flow switch.

7.4.5.6.4 Radioactive Gas Monitors

The gas monitoring channel is located down stream of the alpha CAM. The gases that will be potentially liberated in the vitrification process are iodine (^{129}I), tritium (^{3}H) primarily in the form of tritiated water vapor ($^{3}H_2O$) and carbon (^{14}C) which will be in the form of carbon monoxide (^{14}CO). These cationic gases will be stripped of an electron by the operating temperatures of the melter. Thus, the CAEMs are provided with tritium monitors in place of the standard noble gas monitoring channels. These units consist of an electrostatic precipitator, dual ion chambers, a microprocessor based ratemeter, a flow controller and an integral pumping system.

7.4.5.6.5 Record Air Samplers

The RASs are identical to those described above with the exception that regulated air flow is provided by the integral vacuum pumping system.

7.4.5.6.6 Nitrogen Analyzer

The nitrogen analyzer is located down stream of the RAS. The NO_x monitor consists of a parallel isokinetic sampling system, a detector, a dual scale (0-100ppm and 0-100%) transmitter/analyzer, fail, flow and high alarms. The sample is isokinetically taken from the stack or duct, conditioned, and enters the detector chamber where a continuous, photometric, dry analysis of the total oxides of nitrogen (NOx) is made of the gas mixture. The transmitter output and alarms are annunciated audibly and visually in the local area and in the CCR, BCCR, at the HPCS consoles and terminals.

7.4.5.7 Liquid Radiation Monitors

The liquid radiation monitors are used to measure the potential radioactive contamination that may be found in process liquids. These monitors are designated by their mounting within or externally to the piping. The first and least complicated of these is called an adjacent-to-line monitor. The second is called a strap-on or snowplow monitor. The third is an in-line and the fourth is an off-line monitor.

7.4.5.7.1 Adjacent-to-Line Monitors

The adjacent-to-line monitors are actually area monitors which are mounted adjacent to or on the process piping. The purpose of the monitor is to annunciate a catastrophic failure of the process piping. These liquid ARMs are functionally identical with the operating range ARMs described above. They will also be provided with a check source, a microprocessor based ratemeter with three alarms and the same dynamic range.

7.4.5.7.2 Snowplow Monitors

These monitors will be provided with a minimum of 3" of approximately 4π Pb shielding. These units will be mounted adjacent to 2" pipes. They will be provided with a check source and a microprocessor based ratemeter with three alarms. The detector shall be a NaI(Tl) scintillation crystal which is approximately 1.5 inches in diameter by 1 inch thick with an optically coupled, integrally mounted photomultiplier tube. The detector is mounted in a thin window light tight container. This equipment will be skid mounted.

7.4.5.7.3 In-Line Monitor

The SST liners provided with the sampler shall have a 6 inch I.D. The detector will be inserted into the chamber to provide maximum sensitivity. The detector shall be a NaI(Tl) scintillation crystal which is approximately 1.5 inches in diameter by 1 inch thick with an optically coupled, integrally mounted photomultiplier tube. The detector is mounted in a thin window light tight container. This monitor shall be provided with a check source, a microprocessor based ratemeter with three alarms, a purge valve and a low flow switch. All of this equipment shall be skid mounted.

7.4.5.7.4 Off-Line Monitors

The removable liner associated with this monitor shall be 4π shielded with a minimum of 3" of Pb shielding. The detector shall be a NaI(Tl) scintillation crystal which is approximately 1.5 inches in diameter by 1 inch thick with an

optically coupled, integrally mounted photomultiplier tube. The detector is mounted in a thin window light tight container. These monitors shall be provided with a check source, a microprocessor based ratemeter with three alarms, a purge valve, a low flow switch and an integral pumping system. All of this equipment shall be skid mounted.

Monitors shall have audible and visible alarms for high radionuclide concentration, detector failure and loss of sample flow.

Status and alarm indications for the process LRMs will annunciate at both the DCS and in the CCR, HPCR, the HPCS consoles and terminals. Continuous local and remote indication, including visible and audible alarms, shall be provided.

7.4.5.8 Liquid Effluent Radiation Monitors

There are no liquid effluent radiation monitors provided in HWVP.

7.4.5.9 Toxic Gas Analyzers

The following toxic substances have been identified in the HWVP:

Formic Acid: HCOOH
Nitric Acid: HNO_3

These volatile chemicals will be monitored by an infrared and a chemiluminescent gas analyzer.

An integral 24-point sample sequencing system utilizes teflon valving to provide a parallel path into the NO_x and the CO analyzers. A microprocessor based data acquisition and control system provides valve control, automatic calibration of both analyzers and an interface to the HPS computers. The transmitter output and alarms are annunciated audibly and visually in the local area where the analysis point is located, at the analyzer and in the CCR, the HPCR, at the HPCS consoles and terminals.

7.4.5.10 Automatic $\alpha/\beta/\gamma$ System

Automatic alpha/beta/gamma counting systems are provided with ultra-thin window gas flow proportional counters and anti-coincidence guard detectors for extremely low background sample counting. The microprocessor-based controller provides automatic background subtraction, data averaging, programmable counting sequences, sample factoring, plateau functions,

window discriminator functions, concentration, chi-square and user defined calculations.

The system employs two main counting channels for alpha and beta events. Energy discrimination is accomplished through a programmable single channel analyzer contained in the controller. Cosmic and other background events are excluded from either sample channel through anti-coincidence circuitry connected to the guard detector. Live time correction is provided during all guard channel events.

7.4.5.11 Additional Instruments

I&C will specify some additional health protection radiation monitoring equipment as required by the TDP. Instrumentation will be specified for counting health protection samples in the Counting Room, including an automatic sample changer and toxic gas monitors. No check sources will be specified, except those provided with monitoring channels. No portable radiation monitoring instruments will be specified.

7.4.5.12 Specific Monitor Locations

As a minimum, radiation monitors and detectors will be placed at the following locations:

- In all HVAC Zone I areas that require contact maintenance and/or repair.
- In all HVAC Zone II operating galleries, maintenance and repair rooms.
- In all liquid and gaseous effluent streams.
- In all occupied areas that are likely, or suspected, to contain radioactive materials.
- In all nonradioactive areas where hazardous chemicals are stored or used.

7.4.6 Instrument Representation

Instrumentation and controls (I&C) is responsible for the depictions of all instruments appearing on Process P&IDs and HVAC flow and control diagrams (F&CDs). After coordination with the process or HVAC groups, I&C will add, modify, or delete the instruments represented on the diagrams to agree with the desired monitoring and/or control scheme. I&C, Process, and HVAC will maintain the diagram legends to concur with the diagrams. Instrument numbers will be provided to uniquely identify every instrument in the HWVP. The format and explanation of each field in the format appears on the legend for process and HVAC diagrams. The instrument loop numbers will be assigned in accordance with the Legend of Symbology (H-2-123001).

An item specified by I&C will be given an instrument tag number when a single sensor is used to measure a single medium. If the item uses multiple sensors purchased together in a single enclosure or receives inputs from more than a single measurement point or control loop, the item will be given an equipment number. All instruments will appear once, and only once, on the Process P&IDs or the HVAC F&CDs. DCS input/output and logic notation will be represented on Process and HVAC Diagrams. Equipment may, or may not, appear on a flow diagram depending upon the equipment and the application. Some examples are:

Instrument Numbers
- Control Valves
- Thermometers
- Flowmeters
- Area Radiation Monitors

Equipment Numbers
- Multiplexers
- Operating Stations Including Local Panels
- Portal Monitors

7.4.7 <u>Instrument Installation</u>

7.4.7.1 This section of the guide covers requirements for instrument installations and piping included generally in the following categories:

7.4.7.1.1 Piping, tubing and fittings used to connect instruments to the process piping, HVAC ducts and equipment, process equipment, or cell wall block valves at the operating corridor.

7.4.7.1.2 Instrument air lines, except the main instrument air header and its valved connections.

7.4.7.1.3 Instrument mounting supports with consideration given to seismic requirements for providing adequate support and protection of instruments consistent with their application.

7.4.7.2 <u>Related work not included in this section:</u>

7.4.7.2.1 In-line and in-cell instruments and associated piping that are an integral parts of the process piping system are excluded in this section and are covered in Section 9.0. Examples of such in-line instruments are:

Meter Runs, Magnetic Flow Meters, Turbine Meters, Positive Displacement Meters, Rotameters and Thermal Flow Meters
Control Valves and Dampers
Liquid Level Gauges and Alarms

Relief Valves and Rupture Discs
Thermowells and Temperature Indicators
Steam Traps

7.4.7.2.2 Instrument sensing and pneumatic control leads used to connect process piping or equipment inside the hot cells and cubicles to the cell wall block valve at the operating corridor wall.

7.4.7.2.3 Electrical wiring and services for instrumentation are covered in Section 5.0.

7.4.7.3 Instrument Piping Drawings

Instrument Piping Drawings are generally isometric drawings and are in sufficient detail to show typical piping and support details.

7.4.7.4 Piping Materials

7.4.7.4.1 Instrument Piping Material will be as specified in the Instrument Piping Material Specification.

7.4.7.4.2 Piping which is supplied as a part of packaged equipment may conform to the manufacturer's standard requirements, providing it meets the specified design and applicable code requirements.

7.4.7.4.3 Instrument Piping "Bills of Material" will not be provided. The installer will prepare the "Bills of Material".

7.4.7.4.4 Minimum pipe or tubing will be 1/4 inch, except for connections at instruments, which will be manufacturer's standard.

7.4.7.4.5 Sensing lines for connection to the service piping shall be 3/8-inch minimum.

7.4.7.4.6 Sensing lines outside the process cells for connection to the Heating, Ventilating and Air Conditioning (HVAC) ducts shall be 1/4-inch minimum.

7.4.7.4.7 The material class will be identified on the drawings, along with any deviations to the specification.

7.4.7.4.8 Tubing material shall be consistent within each building.

7.4.7.5 Installation and Layout

7.4.7.5.1 Location Drawings

7.4.7.5.1.1 All instruments with instrument tag numbers are shown on the instrument plan drawings. Other equipment identified with equipment numbers, such as panels and multiple-instrument enclosures, will also be shown on the instrument plan drawings. In-line instruments such as control valves and flowmeters are shown on the piping contract drawings.

7.4.7.5.1.2 All instruments, are shown on the drawings in a position as close to the exact position as the scale drawing will permit. The location of the instrument is not dimensioned.

7.4.7.5.2 Instrument Location

7.4.7.5.2.1 Instruments in vapor or gas service will generally be mounted above the sensing point. Instruments in nonradioactive solutions and steam service will generally be mounted below the sensing point. If accessibility, visibility or clearance requirements preclude either of these situations, provisions will be made in the instrument piping arrangement to ensure proper operation of the instrument. Close-coupled pressure gauges are mounted above the sensing point and are excluded from the aforementioned requirement.

7.4.7.5.2.2 Transmitters potentially exposed to radioactive solutions will be mounted outside the process cells, above the maximum liquid level elevation expected during operation or decontamination. In addition, transmitter cabinets will be provided for those transmitters whose sensing lines are connected to process points that are downstream of a pump or blower and could experience blowback from the process due to loss of purge.

7.4.7.5.2.3 Indicating instruments, confined to nonradioactive areas, that are part of a control system will be visible from the control valve adjustment or operating station. If the equipment or piping arrangement is not visible from this station, remote indication at the control valve adjustment or operating station will be provided. Indicating instruments which are not in the above category will be visible from operating aisles or passageways.

7.4.7.5.3 Instrument Accessibility

7.4.7.5.3.1 Transmitters which connect to equipment or process piping outside the cell area will be close-coupled and line-mounted, where possible.

7.4.7.5.3.2 Local instruments such as recorders, indicators (except thermometers and pressure gauges) and controllers will be mounted so that they are accessible from the floor or operating platform. The instruments will be mounted approximately 4 feet, 6 inches above the floor or grade.

7.4.7.5.4 Instrument Clearances

Instruments will be located as shown on the plan drawings so as to maintain clearance required for corridors, accessways and operation and maintenance of valves and equipment.

7.4.7.5.5 Instrument Mounting and Supports

7.4.7.5.5.1 Transmitting instruments which connect to equipment or service piping outside the cell walls will generally be mounted at grade or floor on pedestal supports or mounted on building wall or column; and as near the sensing point as practicable.

7.4.7.5.5.2 Recording and/or control instruments will generally be remote-mounted at grade or floor on pipe pedestal supports.

7.4.7.5.5.3 Instrument piping will generally be routed through pipeways and areas provided for the routing of plant piping, in order to protect the piping from damage during plant operation and maintenance.

7.4.7.5.5.4 Instrument piping will be supported from pipe supports and any other permanent structure, except:

- Instrument piping will not be supported from uninsulated hot (125°F and above) or cold (40°F and below) pipes.
- Pipe or pipe supports that would be subjected to vibration will not be used.

7.4.7.5.5.5 Instrument piping supports will not be welded to stress-relieved pipe or internally-lined pipe and equipment.

7.4.7.5.5.6 Instrument piping supports will be designed to provide adequate support for the piping and maintain the piping in a neat manner.

7.4.7.5.5.7 Instruments identified as Safety Class 1 will be mounted to provide adequate support and protection from damage by Non-Safety Class items.

7.4.7.5.6 Seals and Purges

When necessary to prevent radioactive contamination, corrosive fluids or solids bearing fluids from entering instruments or instrument lines, seals or purges will be provided. Where diaphragm-type seals are most applicable, they will be given first consideration.

7.4.7.5.7 Instrument Symbols

Symbols used on the instrument detail drawings will be shown on instrument detail legend drawing developed in detailed design.

7.4.7.5.8 Testing

Piping systems and/or equipment will be field-tested in accordance with contract specification.

7.4.8 Distributed Control System (System 61)

7.4.8.1 General

The DCS will be a microprocessor-based hardware and software system used to monitor and control the HWVP. The control philosophy is described in Subsection 7.3.1. This section is intended to provide a brief description of the hardware and software design and the I&C approach to implementing the design in accordance with the applicable standards, reference documents and facility requirements. Additional requirements can be found in Section 6 of the TDP.

I&C will design and specify the Distributed Control System (DCS) for the HWVP. The design of the DCS will include determining the system hardware and software architecture, minimum subsystem performance parameters, and evaluating products from possible suppliers. The specification for the DCS will include hardware and software design requirements, the Control Program Descriptions, the I/O point list, display and report formats, requirements for operator training, documentation, software development capability, spares and expansion capabilities, and factory and field acceptance tests. Sufficient flexibility will be included to allow more than one manufacturer to be considered. All equipment in the DCS will be commercial, off-the-shelf (COTS) equipment as far as possible.

DCS real-time functions (including data acquisition, data storage, display, and alarm) will be designed for 99% availability. No single point failure will cause loss of the entire system. Failure is defined as loss of function that cannot be substituted for by the remaining parts of the system. DCS data handling functions (i.e., data entry, reporting, archiving) at the CRT stations and host computer will be designed for 96% availability. Data stored locally (i.e., at the local processors will be recoverable upon system restart. Data stored on the host computer(s) will be recoverable following system failure (including disk failure).

for system maintenance and off-line diagnostics will be included in the availability calculations.

The DCS shall be designed to respond to required system inputs in a timely fashion. The maximum reaction times shall be achievable when the system is full loaded.

7.4.8.2 DCS Hardware

Process and HVAC instruments will interface with the DCS at Distributed Processing Unit (DPU) cabinets located throughout the facility. These DPUs will interface with the DCS data highways as well as performing local logic and control functions on a stand-alone basis. Information and control signals to/from the DPUs will be sent via the data highway to the host computers and the control consoles.

On-line diagnostics will be capable of identifying failed components to the circuit board level.

The location of each Field Operating Station (FOS) takes into account location of field instruments, as well as installation, environmental and maintenance considerations. DPUs of appropriate capacity will be located in FOS.

Control consoles will be provided to control and monitor the HWVP from the control rooms during normal and upset conditions. The control consoles will contain one or more CRTs, keyboards, and supporting equipment, as required.

The MIS computer will be the normal interface point between the DCS and other computer systems.

The computers and the control consoles will be protected by a fire protection system(s). A list of the major DCS hardware, its location and function is provided in Table 7-3.

7.4.8.3 DCS Software

To the extent possible, the system software specified for use in the DCS will be commercial off-the-shelf software. Software and components will be of modular design which may be easily upgraded as enhanced hardware and software becomes available over the system lifetime. System design will permit upgrades or component replacements with a minimum impact on system operations. Password security will prevent unauthorized programming. Application data bases to be supplied with the DCS will be specified in the application descriptions. Other, more complex application software may be developed on-site during installation test and start-up. Process control application software is to be implemented in

TABLE 7-3 (Sheet 1 of 3)

DCS MAJOR EQUIPMENT AND DESCRIPTIONS

DCS Subsystem		HWVP Location	Primary Function
1.	BCR (Backup Computer Room) Building OC/REB	Operations Control/ Regulated Entrance	The primary backup for Computer Room.
2.	CCR (Central Control Room) (Eight DCS CRT displays)	OC/REB	Primary, central operator stations supporting HVAC, power and utilities, feed/Melter, and canister handling operations.
3.	SCC (Supervisors Control Console) (Four DCS CRT displays)	OC/REB (CCR)	Primary supervising control station for operations supervision and override control for all DCS process and plant functions.
4.	Program Development Station	Operational Annex Building (OAB)	Primary program development stations for DCS software configuration, high level language and specialized programs.
5.	Training Station	OAB	Primary off-line plant simulation and operator training station (no plant control capability).
6.	CR (Computer Room)	Vit Bldg Flr Two (West)	Primary DCS host computer station for DCS short-term archives, reports and central DCS database.
7.	Backup Central Control Room (BCCR)	Vit Bldg Flr Two (West)	Backup Central Control Room and Emergency Shutdown Station.
8.	BCCR (Backup Central Control Room) (also Field Operating Station-FOS-01)	Vit Bldg Flr Two (West)	Field I/O interface to DCS and maintenance operating station.
9.	FOS-03	Vit Bldg	Field I/O interface to DCS and Flr Four (Roof)maintenance operating station.

TABLE 7-3 (Sheet 2 of 3)

DCS MAJOR EQUIPMENT AND DESCRIPTIONS

DCS Subsystem		HWVP Location	Primary Function
10.	FOS-04	Service Bldg	Field I/O interface to DCS and (Main Floor) maintenance operating station.
11.	FOS-05	Canister Storage	Field I/O interface to DCS and Bldg maintenance operating station.
12.	FOS-06	WHT Bldg	Field I/O interface to DCS and maintenance operating station.
13.	FOS-07	Fan House	Field I/O interface to DCS and (Main Floor)maintenance operating station.
14.	FOS-08	Generator	Field I/O interface to DCS and Building generator building.
15.	FOS-09	Operations	Field I/O interface to DCS and Control Building operations control building.
16.	DPU (Distributed Processor Units)	All FOS Locations (8.) through (15.)	Each DPU supports up to 256 input output functions and executes continuous, sequential and batch control programs assigned to it. About 200 I/O functions/DPU are assigned with the remainder to be used for redundancy, spares and growth.
17.	Operator Display Stations (Processors)	Primary Operations Stations (2.), (3.), (7.)	Redundant display processors acquire, store, and output DCS data commands to display stations in real time. Display builders, formats and configuration of software are supported at these computers.
18.	Data Highway	Connecting All DCS Functions (1.) through (16.)	Provides real-time and request data communication between all DCS functions. Downloading and uploading of operator programs and requests are supported.

TABLE 7-3 (Sheet 3 of 3)

DCS MAJOR EQUIPMENT AND DESCRIPTIONS

DCS Subsystem		HWVP Location	Primary Function
19.	LAN (Local Area Network(s))	Connecting all HWVP Main Plant Computers	Primary broadband (high data rate) plant communications between DCS HP, Laboratory, office and Hanford site computers to form an integrated HWVP plant information system.
20.	Remote Multiplexer Units	Various HWVP Remote Locations	Remote multiplexer units are distributed throughout the HWVP to pick up functions such as fire detection, cooling tower, electrical, and other chemical/facility functions in uncontrolled and remote areas. Each remote multiplexer unit connects to assigned DPUs (16.) or the DCS data highway.
21.	Maintenance Terminals	All DPU (16.) Locations	Portable Personal Computer (PC)-based stations provide support to maintenance functions at FOSs remote to the BCR and BCCR.

accordance with the appropriate Process Control Description (PCD).

7.4.8.4 Process Control Descriptions (PCDs)

The PCD narrative is to provide a documentation baseline for the implementation of control logic. The PCD describes the processing logic and the instrumentation associated with the system, or parts of the system, to serve as the source for the logic implementation documentation; i.e., the documentation required to implement that logic in the DCS and in Local Panels with PLCs. Logic implementation documentation includes logic diagrams, coding, configuration, and testing procedures.

The PCDs do not include higher level administrative functions and programs which may be necessary for integrated plant operation. PCDs do not include logic which will be implemented in the Management Information System (MIS), the Health Protection Computer System (HPCS), or the Analytical Laboratory Computer System (ALCS) computers.

7.4.8.4.1 Process Control Logic Specifications

The PCD will serve as the basis for Process Control Logic Specifications, which will specify all DCS and PLC logic. These specifications describe the logic configuration to be delivered by the DCS and PLC vendors.

7.4.8.4.2 PCD Content

The relevant sections of this PCD are described below:

7.4.8.4.2.1 General Description

This section defines the scope of the PCD and describes the functions to be performed and their relationship to other systems in general terms. It is an executive summary of the PCD.

7.4.8.4.2.2 Operating Description Narrative

This section provides a narrative description of the overall system operation, discussing Routine Operations, Infrequent Normal Operations and Abnormal Conditions.

The Preliminary Design issue of the PCD includes a discussion of the Normal Operation of each item of equipment requiring, or interfacing to, programmed control logic. This includes a description of the associated instruments/ equipment and the operator (DCS or Local) interaction required.

Narrative descriptions of some Infrequent Normal Operations such as start-up, recovery after automatic shutdown, and

placement in planned shutdown mode are included. The remainder will be provided in Detailed Design. Process hold points, and the associated functions, alarms, and controls are also described.

Credible Abnormal Conditions that might interrupt the normal process flow, such as leaks and overpressures, and personnel/equipment protection features are also described.

Revision 0 of the PCD includes sufficient detail to provide the basis for developing the Control Program and Logic Controller Specifications. These specifications will be developed during Detailed Design.

Control Programs and Logic Controllers, defined by hex and diamond symbols on the P&ID, are provided to indicate programmable control logic implemented in the DCS or PLCs. The controller features are mentioned in the narrative as they support various aspects of the main process sequence. The Control Programs may also be separately discussed in the Operating Description Narrative to more completely describe the functions they are to perform, not only in support of the normal process flow but also to discuss conditions or features not mentioned elsewhere in the Operating Description Narrative.

7.4.8.4.2.3 Application Program Specifications
(To be developed in Detailed Design)

System Level Control Programs to be implemented in the DCS or PLCs are identified with the system number in a hex symbol on the P&ID and listed in this section. Depending upon its complexity, a system may have one or more control level programs, or may have none at all. It is to be noted in the specifications of these programs if they interface to MIS or ALCS programs.

Control Program Specifications will be documented during Detailed Design. These specifications will be the primary source document for coding and testing the logic described.

7.4.8.4.2.4 Logic Controller Specifications
(To be developed in Detailed Design)

Each of the Logic Controller symbols (diamond) on the P&ID is listed in this section.

Logic Controller Specifications will be developed during Detailed Design. These specifications will be the primary source document for coding and testing the logic described.

7.4.8.4.2.5 Special Analog Functions

Analog functions, if required, involving special algorithms or computations not normally supplied with Distributed Control Systems are described in this section. Necessary formulas or tables may be embedded in the text or shown on attachments.

Interfaces to other PCDs are also to be listed.

7.4.8.4.2.6 Reference List

This section lists the reference documents which directly describe the primary system and equipment (reference by equipment tag number) included in the system. Reference documents listed here include P&ID, CPD and CLD documents.

Similar reference documents are listed for systems and equipment that interface to this system.

7.4.8.5 DCS Security

Security will be provided by keylock and multiple levels of passwords. Passwords will be required to modify point parameter files, display backgrounds and system configuration.

7.4.9 Health Protection System (System 62)

The Health Protection System (HPS) consists of the radiation monitoring instrumentation described in Subsection 7.4.5 and the Health Protection Computer System and Vacuum Blowers described in this section.

7.4.9.1 Health Protection Computer System

The Health Protection Computer System (HPCS) will be designed to protect the public, plant personnel, and plant equipment from radioactivity and other hazardous conditions. The radiation monitoring instruments are discussed in Section 7.4.5.

Health protection and radiation monitoring systems will be designed so that no undetected single point failure results in the loss of monitoring function.

The HPCS is a completely distributed system in which each monitoring channel is a self-contained unit that will continue to operate in the event of HPCS or communications line failure. Local displays include monitoring data and alarms that are audibly and visually annunciated. The check source can also be actuated both remotely and locally.

HPCS real-time functions (including data acquisition, data storage, display, and alarm) will be designed for 99%

availability. No single point failure will cause loss of the entire system. Failure is defined as loss of function that cannot be substituted for by the remaining parts of the system. HPCS data handling functions (i.e., data entry, reporting, archiving) at the CRT stations and host computer will be designed for 96% availability. Data stored locally (i.e., at the local processors) will be recoverable upon system restart. Data stored on the host computer(s) will be recoverable following system failure (including disk failure). Down-time for system maintenance and off-line diagnostics will be included in the availability calculations.

There will be two HPCS computers with automatic failover from the primary unit located in the BCCR to the hot stand-by unit located in the CCR. Spare HPCS processing and data storage capability will be available at the time of system delivery. The HPCS (i.e., main HP computer(s), local processors, and terminals) will include both on-line and off-line diagnostics to locate system faults. On-line diagnostics will be capable of identifying failed components to the circuit board level.

The HPCS computer will provide:

- Data collection from local processors and/or directly from monitors
- Redundant communication with the field multiplexers
- Data storage, trending, statistical manipulation, and reporting
- Communication of data to the MIS host computer.
- Program development in high level languages for software modification, system start-up, and off-line diagnostic functions
- Data base management

Software and components will be of modular design which may be easily upgraded as enhanced hardware and software becomes available over the system lifetime. System design will permit upgrades or component replacements with a minimum impact on system operations.

The HPCS applications software will include statistical and engineering applications programs, graphics, and report generator capability. In addition to the high radiation and failure alarms, the software shall include a check source failure alarm which will indicate that the reading has not changed in the last 30 seconds and the source has failed to retract.

Data acquisition, data base, color CRT display and report functions will utilize user-configurable software or firmware which does not require knowledge of computer programming.

A console with at least two (minimum 19" diagonal) color graphic CRTS with keyboards and a printer is required in the Health Protection Control Room (HPCR).

A training console with read-only capabilities will be provided in the training room.

A terminal is a color graphic CRT with a keyboard. There will be a terminal located on the Supervisors Consoles and one each in the Central Control Room (CCR), the Backup Central Control Room (BCCR) and the canister storage building.

In order to meet the desirable response time requirements and to concentrate the local ratemeter data, the HPS will include one or more multiplexers (MUXs) per floor in the Vitrification Building. In addition, there will be a minimum of one MUX in each of the remaining buildings associated with HWVP, except the Service and the Sand Filter Buildings.

The input signals associated with these intelligent (MUXs) will include industry standard analog, digital (contact closure and pulse), and/or serial data links, as appropriate, to each monitoring channel.

The MUXs will communicate with the main computers via a redundant HPCS data highway.

The multiplexers will be provided with application software that permits Health Protection personnel to access each of the monitoring channels connected to it. In addition to operating data, the MUX will provide status information such as "Out of Service for Repair," "Date of Next Calibration" and "Date of Next Maintenance." Finally, authorized personnel may change set-points, activate check sources, as well as start, stop, purge process and effluent monitors. The MUXs will also accept data from nonradiation monitors such as pH and NOx.

The MUX I/O capacity will be designed for 25% (minimum) spare capacity at time of system delivery.

Components of the HPCS, located in environments adverse to digital circuits, will be provided with enclosures and a conditioned environment adequate to ensure that system availability requirements are met.

All instruments interfaced to the HPCS and monitored in the HP control room and Central Control Room will be provided with both visible and audible alarms.

Monitoring systems will have self-testing and calibration check capabilities which do not require instrument movement or removal.

7.4.9.2 HP Vacuum Blowers - System 62

7.4.9.2.1 Reference Drawings

Piping and Instrument Diagrams

H-2-123370 Sheet 1	00	System 62 HPS Vacuum Blowers Vit., MRB, OC/REB, Frit Storage/Cold Chem. Buildings
H-2-123370 Sheet 2	00	System 62 HPS Vacuum Collection Vit. Building, Tunnel Level, Mezz. Level, First & Second Floors
H-2-123370 Sheet 3	00	HPS Vacuum Collection Vit. Building, Third & Fourth Floors
H-2-123370 Sheet 4	00	System 62 HPS Vacuum Collection MRB, Frit St/Cold Chem., CMR, OC/REB & Shipping/Receiving Buildings
H-2-123370 Sheet 5	00	System 62 HPS Vacuum System Canister Storage Building
H-2-123370 Sheet 6	00	System 62 HPS Vacuum System Fan House
H-2-123370 Sheet 7	00	System 62 HPS Vacuum System WHT Building

HPS Monitor Location Plan Drawings

H-2-121100	HPS Monitor Location Legend
H-2-121101, 102, 105, 106, 108, 109, 110, 111	Vit Building Tunnel Level, First, Mezzanine and Second Floor
H-2-121112, 113, 114 115, 116	Vit. Building Third & Fourth Floors
H-2-121125 Sheets 1 - 5	Manipulator Repair Building
H-2-121103	Contact Maintenance Room
H-2-121104	Vit. Building Shipping/Receiving Tunnel Level
H-2-121107	Vit. Building Shipping/Receiving First Floor
H-2-121121	Frit Storage/Cold Chem. Building
H-2-121122	OC/REB
H-2-121123	WHT Building
H-2-121118 Sheets 1 & 2	Canister Storage Building, First Floor
H-2-121120 Sheets 1 & 2	Fan House, First Floor & Second Floor

7.4.9.2.2 Functional Design Criteria Document

The following section of the FDC is applicable to System 62:

2.2.16 Health Protection System

7.4.9.2.3 Technical Data Package Document

Section 11 of the TDP is applicable to System 62.

7.4.9.2.4 System Description

7.4.9.2.4.1 Functional Requirements

Health protection (HP) vacuum blowers provide a dedicated central vacuum system to support HP sampling and monitoring systems. The central vacuum system enables constant sample flow rates for the monitors and samples at various locations in the Vitrification, Manipulator Repair, OC/REB, Canister Storage, WHT, and Fan House Buildings. These samples are used to determine the quality of air that HWVP personnel breathe.

7.4.9.2.4.2 System Interfaces

Systems which interface with the HP vacuum blowers associated with the Health Protection System (System 62) include:

a) Heating, Ventilating, and Air Conditioning System (System 03) - Vacuum blower exhaust is routed to that system; and

b) Distributed Control System (System 61).

Process Description

The HP vacuum blower system consists of the following three dedicated central vacuum subsystems:

1. HP vacuum blowers for the Vitrification, Manipulator Repair, Frit Storage/Cold Chemicals and OC/REB Buildings.

2. HP vacuum blowers for the Canister Storage Building

3. HP vacuum blowers for the Fan House

4. HP vacuum blowers for the WHT building

Each subsystem performs in a similar manner and includes air monitor vacuum piping, HEPA filters, vacuum blowers, motors, electrical auxiliaries, and instrument loop components to provide continuous or intermittent air monitoring at all required locations.

The vacuum blowers are designed to provide 20 in. Hg. vacuum to maintain a minimum flow of 2 SCFM through each sample head under normal and upset conditions. The maximum air flow through the CAMs is 3 SCFM. The constant flow rate is 2.2 SCFM.

Redundant blowers are provided and each blower has a minimum 15% reserve capacity.

The vacuum blowers are equipped with inlet and outlet silencers. All sample air lines from CAMs are connected to a vacuum header. The total sample air passes through a HEPA filter prior to entering the vacuum blower suction. Vacuum Blowers discharge locations are shown below:

Vacuum Blower	Discharge Location
Vitrification, OC/REB, MRB, Frit Storage/Cold Chem. Bldgs. (VP-620-001VA/VB)	Vitrification Building Zone II exhaust plenum
WHT Building (VP-620-002VA/VB)	WHT HVAC Exhaust
Canister Storage Building (VP-620-003VA/VB)	Canister Storage Building exhaust plenum
Fan House (VP-620-004VA/VB)	Fan House HVAC Exhaust

A pressure control valve is provided in each vacuum blower subsystem to introduce atmospheric air into the vacuum header, as needed. This provides anti-surge protection to the associated vacuum blower and pressure maintenance to the associated vacuum header.

Figure 7-1 is a block flow diagram of the HP Vacuum Blower System (System 62).

Table 7-6 provides an equipment data sheet list for System 62.

Table 7-7 provides the CAM summary for this system.

7.4.9.2.5 Process Considerations

7.4.9.2.5.1 System Supply Sources and Design Capacity

The HEPA filters and vacuum blowers of System 62 receive air samples from CAMs located in several buildings listed in the Subsection 7.4.2.4.3. Guidelines for estimating air sample flows and vacuum requirements are summarized in Westinghouse Correspondence No. HWVP/FLU. V-88-143 dated December 15, 1988. Table 7-5 summarizes total number of CAMs in different buildings and lists the assumptions made.

7.4.9.2.5.2 Utilities and Chemicals

System 62 requires no utilities or chemicals.

7.4.9.2.5.3 Materials

The vacuum headers and vacuum blowers are constructed of carbon steel.

7.4.9.2.5.4 Process Control

No Process Control Description is required for the Health Protection Vacuum Blower System because its only interfaces with the DCS are for alarm monitoring.

Four local panels are provided for controlling the four HPS Vacuum Systems. Common trouble alarms (one per panel) in the DCS are activated when their corresponding local annunciators are in alarm condition.

The common trouble alarm and suction header pressure for each vacuum system are wired to the HPCS and the DCS.

Source		Exhaust
CAMs and RASs in Vitrification, Manipulator Repair, OC/REB and Frit Storage/Cold Chem. Buildings	VACUUM BLOWER PACKAGE	To Vit. Building Zone II Exhaust Plenum
CAMs and RASs in Canister Storage Building	VACUUM BLOWER PACKAGE	To Canister Storage Building Exhaust Plenum
CAMs and RASs in Fan House	VACUUM BLOWER PACKAGE	To Fan House HVAC Exhaust
CAMs and RASs in WHT Building	VACUUM BLOWER PACKAGE	To WHT HVAC Exhaust

Figure 7-1
BLOCK FLOW DIAGRAM
VACUUM BLOWERS FOR H.P. AND RADIATION MONITORING (SYSTEM 62)

Table 7-6

Equipment Data Sheets for System 62

Equipment data sheets will be prepared for the HP Vacuum System in accordance with the PM/CM.

The following equipment data sheets are applicable to the HP Vacuum System:

Equipment Tag	Equipment Description	Date Issued
FH-620-001A	Vit. Bldg. HPS Vac. Sys. HEPA Filter	September, 1990
FH-620-001B	Vit. Bldg. HPS Vac. Sys. HEPA Filter	September, 1990
FH-620-002A	WHT Bldg. HPS Vac. Sys. HEPA Filter	September, 1990
FH-620-002B	WHT Bldg. HPS Vac. Sys. HEPA Filter	September, 1990
FH-620-003A	Canister Storage Bldg. HPS Vac. Sys. HEPA Filter	September, 1990
FH-620-003B	Canister Storage Bldg. HPS Vac. Sys. HEPA Filter	September, 1990
FH-620-004A	Fan House HPS Vac. Sys. HEPA Filter	September, 1990
FH-620-004B	Fan House HPS Vac. Sys. HEPA Filter	September, 1990
VP-620-001VA	Vit. Bldg. HPS Vac. Blower	September, 1990
VP-620-001VB	Vit. Bldg. HPS Vac. Blower	September, 1990
VP-620-002VA	WHT Bldg. HPS Vac. Blower	September, 1990
VP-620-002VB	WHT Bldg. HPS Vac. Blower	September, 1990
VP-620-003VA	Canister Storage Bldg. HPS Vac. Blower	September, 1990
VP-620-003VB	Canister Storage Bldg. HPS Vac. Blower	September, 1990
VP-620-004VA	Fan House HPS Vac. Blower	September, 1990
VP-620-004VB	Fan House HPS Vac. Blower	September, 1990

Table 7-7

CAM SUMMARY

BUILDING	FIXED CAM			RECORD AIR SAMPLER	ESTIMATED TOTAL
	β/γ	α/β	TOTAL		
Vitrification Building	62	26x2	114	104	218
OC/REB	--	2x2	4	24	28
Canister Storage Building	2	3x2	8	7	15
Manipulator Repair Building	7	3x2	13	31	44
Frit Storage/ Cold Chemical Building	--	---	--	3	3
Fan House	13	---	13	9	22
WHT	1	1x2	3	10	13
Estimated Total			155	188	343

Notes:

1. CAM Sample Rate: 2.2 SCFM
2. Vacuum Header Pressure Control Set-point: -20 Hg. Vacuum
3. Redundant HEPA filters should be provided upstream of blower to minimize potential for contamination spread during operating and maintenance.
4. The actual quantities can be found on the HPS Monitor Location Plan drawings.

7.4.9.5.5 Equipment Arrangement

Equipment location and identification are presented on the General Arrangement drawings referenced in Section 7.4.9.2.1.

7.4.9.2.6 Safety

All equipment are Safety Class 3.

7.4.9.2.7 Reliability and Maintenance

Each HP Vacuum System consists of two 100% vacuum blowers. One is normally running and the other is on standby which will automatically start on low vacuum in the suction header. Suction lines are connected and valved such that any filter and vacuum blower combination will work together.

7.4.9.2.8 Environmental

All HP vacuum system equipment are located indoors where the ambient temperature is maintained by an HVAC system.

7.4.9.2.8.1 Other Considerations

None.

7.4.10 Analytical Laboratory Computer System (Portion of System 64)

System 64 will be developed during detailed design.

7.4.11 Management Information System (System 66)

System 66 will be developed during detailed design.

7.4.12 Local Instrument Racks/Panels

Local instrument racks and panels will be located throughout the HWVP. Racks and panels may contain any of the field instruments found in Subsection 7.4.2 or any found in this section. Instruments and purchased components shall be UL listed or FM approved.

7.4.12.1 Rack and Panel Construction

7.4.12.1.1 Mechanical Construction

7.4.12.1.1.1 Instrument racks and panels will be in accordance with HWVP drawings Generally, racks are considered as open structures and panels are considered as enclosures. The designation of Safety Class 1 or 2 or Non Safety Class will be identified in the specifications. The Supplier shall comply with the requirements of the specific class as identified.

7.4.12.1.1.2 Panel enclosure designs will be based on available catalog items, whenever practical. Minimum steel thickness will be 14 Gauge with thicker sections used when required by size or load. Facility mounting provisions will be based on the enclosure type and seismic requirements and will be included in the appropriate specification. Maintenance access doors will be hinged and have keyed locks to prevent unauthorized access. Heat rise and ventilation considerations will be included in the appropriate specifications. Front or rear panel access requirements will be identified in the specification.

7.4.12.1.2 Electrical Construction

7.4.12.1.2.1 Instrument rack or panel wiring will comply with the National Electrical Code and separation criteria (as referenced in IEEE-384) when required by Safety Class Identification.

7.4.12.1.2.1.1 Instrument rack wiring will be contained by means of conduit in accordance with NFPA-70.

7.4.12.1.2.1.2 Incoming and outgoing instrument wiring will be terminated on terminal blocks and identified with preprinted labels. Instrument rack terminal blocks will be mounted in junction boxes.

7.4.12.1.2.1.3 Terminal blocks will be in accordance with UL-1059, and will be medium duty, 600 volt rating, or nonhygroscopic material such as Electrovert Series 9200 modular-type terminals.

7.4.12.1.2.1.4 Rack-mounted electrical devices requiring external connections will be wired to a terminal block.

7.4.12.1.2.1.5 Approximately 25% terminal block spare terminals will be provided at time panel is shipped.

7.4.12.1.2.1.6 Rack wiring will be in accordance with National Electrical Code, Article 725, Class 1 and Class 2. The wire/cable will be No. 16 AWG stranded copper with 600 volt insulation in accordance with UL-83.

7.4.12.1.2.1.7 Each instrument rack will have a copper ground bus bolted to the frame. The bus will have screws to fasten a minimum of ten ground wires (10 to 14 gauge).

7.4.12.1.2.1.8 Fittings, tubing and pipe materials will be in accordance with Instrument Piping Material Specification.

7.4.12.1.2.1.9 Air supply for pneumatic systems will be installed complete with dual air filter and pressure-reducing regulators piped in parallel, with block valves. Relief protection will be provided.

7.4.12.1.2.1.10 Rack drawings will indicate type and location of rack instruments.

7.4.12.1.2.1.11 Panel-mounted instruments will be removable from the panel without disturbing exterior connections (FDC-4.4.1).

7.4.12.1.2.1.12 I/O wiring will be provided with suitable isolation devices where interfaces of safety class to non safety class are identified on the drawings.

7.4.12.1.2.2 Panels will be designed for 480 V ac maximum voltage level. All wire and terminals will have a 600 V minimum rating. All components used will be UL-approved or designed in accordance with UL standards if an approved component is not available.

- Terminals and components will be located and insulated, if necessary, to prevent shock hazard during routine adjustment and maintenance operations.

7.4.12.1.2.2.1 Terminal Strips

- Rail-mounted terminal blocks with screw compression-type terminals will be used. No more than two wires will be connected to each screw terminal.
- All field wiring will terminate on dedicated terminal strips before being connected to control components.
- The greater of 25% or two spare terminals will be provided for each terminal strip.
- Terminal strips will have provision for printed identification of strip number and terminal number. This will be supplied for each terminal strip.
- Terminal strips will be mounted on stationary or swing-out subpanels with adequate spacing for wiring and raceways.

7.4.12.1.2.2.2 Power Distribution and Fusing

- The incoming power will be divided into the required number of circuits. The greater of 10% or one spare circuit will be provided.
- Each power circuit will have its own rail-mounted fused disconnect and neutral terminal.

7.4.12.1.2.2.3 Wire Types

All internal point-to-point wiring will be in accordance with NFPA-70, Article 725, Class 1 and 2. The wire or cable will be no. 16 AWG (min.) stranded copper with TFFN 600 V insulation. Lamp wiring may be no. 18 AWG and shielded cable may be no. 20 AWG.

7.4.12.1.2.2.4 Wire Identification

- Wires will be color-coded as follows:

Ac hot or dc positive	-Black
Ac neutral or dc negative	-White
Safety Ground	-Green

  Special or multiconductor cable will be coded in accordance with the manufacturer's recommendations.

- All wires will be identified on both ends with shrink-on sleeving such as Brady-type SEHCPS. Daisy-chained wires will maintain the same number throughout the run.

  Wires will be marked using the highest applicable priority:

  1. Power circuit number.
  2. Instrument tag number.
  3. PLC I/O terminal number.
  4. Terminal strip and terminal number.

7.4.12.1.2.2.5 Wire Routing

- Cables supplied with portable panels will enter through the lower right side using grip-type strain relief fittings. These cables will be designed to plug into wall-mounted junction boxes which will be supplied by the facility electrical installation contractor. Each panel will have cable storage brackets designed to store all of its cables.

- Cables to floor-mounted control cabinets will be routed through a removable panel on the top of the cabinet using cables, conduit or raceways, as appropriate.

- Console internal wiring will be contained in metal or plastic raceway or conduit. When possible, power and signal circuits will be run separately to minimize electrical noise.

- If swing-out panels are used, cables will have adequate service loops protected with sleeving or spiral nylon

wrapper. Pass-through holes for wires will be protected with grommets or bushings.

7.4.12.1.2.2.6 Grounding

A dedicated rail-mounted safety ground block will be provided for each incoming cable or conduit. The rails will be bonded to the console frame and have provisions for connecting a no. 8 AWG safety ground wire.

7.4.12.1.2.2.7 Wiring Documentation

- The appropriate specification will require the contractor to submit a complete point-to-point wiring diagram and a power circuit distribution list to be mounted in the console.
- The specification will contain an interface wiring list and connector schedule to define the facility wiring interface.

7.4.12.2 Panel Layout

7.4.12.2.1 Controls will be grouped in clearly identified groupings based on the functions to be controlled.

7.4.12.2.2 Controls for in-cell equipment will be placed in the same relative position as the controlled device as seen through the cell wall window, whenever practical.

7.4.12.2.3 Emergency Stop switches will be Microswitch mushroom head-type PWM mounted in the upper left-hand corner of the control panel.

7.4.12.2.4 Panel layouts will be designed in accordance with the applicable sections of MIL-STD-1472C.

7.4.12.2.5 Push buttons used for control will have vertical half-guard bezels to prevent inadvertent operation. Critical switches will have lift-up guards.

7.4.12.2.6 Individual Alarm lights, horns, acknowledge/silence and reset controls, along with the combined alarm and lamp test button, will be grouped at the front edge of the panel. Generally, Alarms will be unitized and located at the top of vertical control panels.

7.4.12.2.7 The specification will require the Contractor to locate and wire the front of panel instruments so that future additions may be accommodated.

7.4.12.3 Rack and Panel Instruments and Equipment

7.4.12.3.1 Annunciators

7.4.12.3.1.1 The following annunciator requirements are for independent hardware annunciators driven directly by the process control equipment or by the HWVP DCS. Primary annunciation through the DCS CRT displays is not included in these requirements.

Annunciators will be a solid state multipoint devices with backlighted nameplates and in accordance with UL 94.

- Nameplates
  - Each alarm point will be supplied with an individual nameplate.
  - The nameplates will be translucent plastic suitable for engraving.
- Enclosure
  - Annunciator assemblies will be suitable for flush mounting on control panels and DCS consoles.
  - Each assembly will contain backlighted nameplates, plug-in alarm modules and flasher/audible module.
  - Front access for lamp and alarm module replacement and rear access for wiring terminals will be provided.
- Lamps

  Nameplates will be lighted by two separate lamps in parallel each having at least a 50,000-hour life.
- Terminals
  - Electrical connections will be clearly numbered and indicate circuit polarity, ground lines and test connections.
  - Insulating materials will be nonhygroscopic and terminals either tinned or silver-plated.
- Power Supply

  120 Vac, 60 Hz power to integral supplies.
- Alarm Modules
  - Each alarm will accept normally open or normally closed trouble contacts.

- An audible alarm signal independent of other alarm points will be provided for each assembly.

- An auxiliary contact (5 amps) will be provided for each alarm.

- Surge withstand capability will be in accordance with IEEE C37.90a.

- Alarm inputs will be optically isolated.

• Acknowledge - Test

- Each annunciator assembly will provide remote push buttons for "Acknowledge" and "Test".

- Test buttons will test the lamps, flasher and audible signal.

• Sequence of Operation

The visual/audible sequence of operation will conform to F2M-1, as specified in ISA S18.1.

7.4.12.3.2 Programmable Logic Controllers

7.4.12.3.2.1 Construction will be with standard catalog modules that are easily replaceable without disconnecting field wiring.

7.4.12.3.2.2 Power input will be 120 V 60 Hz with operating voltage and dip recovery in accordance with NEMA ICS 3-304.40 and 3-304.41.

7.4.12.3.2.3 All memory will be nonvolatile, except application programs which may be stored in battery-backed RAM. Application memory utilization will not exceed 50%.

7.4.12.3.2.4 Maximum CPU utilization will not exceed 50% at a maximum scan time cycle of 50 milliseconds.

7.4.12.3.2.5 I/O will be optically isolated solid-state design unless a relay interface is required by the specification. Digital and analog outputs will be sized so that the maximum applied load does not exceed 75% of the rated capacity.

7.4.12.3.2.6 Field experience records or calculations will be supplied to verify that the overall MTBF of the PLC equals, or exceeds, 20,000 hours.

7.4.12.3.2.7 A manual program loader will be supplied which has the capability of programming and making backup copies of the application program on magnetic or solid-state media. The loader will also be capable of uploading and downloading the application program.

7.4.12.3.2.8 Documentation provided will include standard software manuals and copies of the application program in both printed and magnetic or solid-state media form.

7.4.12.3.2.9 The PLC will have electrical noise tolerances in accordance with ICS 3-304.42.

7.4.12.3.2.10 PCDs describing program logic in PLCs will be prepared in accordance with Subsection 7.4.8.3.1.

7.4.13 Fire Alarm Annunciation System

Fluor Daniel fire protection engineering will design the HWVP fire protection system and specify the majority of the equipment. The annunciator panel and the interface between the panel and the DCS will be engineered by the I&C Group. Fire Protection will determine the number of alarms and trouble indications required and the Electrical Engineering Group will specify the wiring from the sensors to the annunciator panel. All indications and alarms will be routed to the annunciator panel and information will be relayed from the panel to others for their use. The panel will be located by the main entrance to the Vitrification Building (FDC-4.1.9.3) with readouts in the CCR.

7.5 SPECIFICATIONS

I&C will write and maintain narrative procurement specifications to allow the contractor to procure the instruments. Specifications will follow the CSI format and conform to the PM/CM. Each type of instrument will have a narrative specification. Each instrument will be individually specified on Fluor Daniel standard data sheets, where applicable. Relevant process data will be incorporated into the data sheets and an example of manufacturer and model number of a suitable instrument will be cited. Sizing of control valves, relief valves, and orifice plates will be in detailed design. The specifications will include testing and certification requirements as well as installation and manufacturers' support details.

In addition, I&C will design and specify the DCS, HPS, MIS and the ALCS. The DCS Specification will include all System 61 equipment found throughout HWVP. The HPS specification will include the HPCS and all health protection instrumentation. Radiation monitors associated with Systems 11-17, 63, and 64 will not be included, except for the Liquid Radiation Monitors (LRMS).

For detailed design, I&C will update the DCS and HPS specifications and also prepare specifications for the MIS, ALCS, seismic detection system and the safe shutdown system.

All these system specifications will provide the basis for the procurement of these systems.

Finally, I&C will develop the following supportive specifications in detailed design:

- Instrument Installation Specifications
- Instrument Checkout and Calibration Specifications
- Instrument Piping Materials Specification
- Instrument Piping Pressure Testing Specification
- DCS Installation Specification
- HPS Installation Specification
- MIS Installation Specification
- ALCS Installation Specification
- Fire Alarm Annunciator Installation Specification
- DCS Checkout Specification
- HPS Checkout Specification
- MIS Checkout Specification
- ALCS Checkout Specification

7.6 DRAWINGS

I&C will produce HP monitor location drawings in support of Preliminary Design. All drawings required for support of instrument systems and installation of instruments will be produced in detailed design.

SECTION 8.0

MECHANICAL ENGINEERING AND DESIGN

TABLE OF CONTENTS

SECTION		PAGE
8.1	SCOPE	2
8.1.1	APPLICABLE EQUIPMENT	2
8.1.2	NON-APPLICABLE EQUIPMENT	2
8.2	CODES, STANDARDS, AND SOURCE DOCUMENTS	3
8.3	GENERAL CONSIDERATIONS	3
8.3.1	FUNCTIONAL R&C	3
8.3.2	SAFETY R&C	4
8.3.3	RADIATION PROTECTION R&C	5
8.3.4	IN-SERVICE INSPECTION AND MAINTENANCE R&C	5
8.3.5	COST AND EFFICIENCY R&C	6
8.3.6	MATERIAL AND FABRICATION PROCESSES	6
8.3.7	QUALITY ASSURANCE/IMPACT LEVELS	7
8.3.8	SAFETY CLASSIFICATION	7
8.4	MECHANICAL DESIGN CONSIDERATIONS AND STANDARD PRACTICES	7
8.4.1	TANKS AND VESSELS	7
8.4.2	VESSEL DESIGN	8
8.4.3	ROTATING EQUIPMENT	11
8.4.4	HEAT TRANSFER EQUIPMENT	13
8.4.5	HEPA FILTERS	13
8.4.6	ELECTRIC MOTORS	14
8.4.7	MATERIAL HANDLING EQUIPMENT	14
8.4.8	WELDING	15
8.5	SPECIFICATIONS	15
8.5.1	SPECIFICATIONS AND FLUOR DIMENSIONAL OUTLINES (FDOs)	15
8.6	DRAWINGS	16
8.7	SPECIFIC SYSTEMS AND COMPONENTS	16

8.0 MECHANICAL ENGINEERING AND DESIGN

8.1 SCOPE

This section provides detailed guidance for the design and engineering of the mechanical components in the various process and process support systems of the HWVP. Specifically excluded are those mechanical devices which are one-of-a-kind, remotely operated, and custom-engineered for this project. For example, the Canister Closure System (System 17) which contains the Melter is discussed under Process Systems, Section 3.7.

This section provides sufficient design control such that a consistent technical approach to precepts, detail, and procedures is applied to the design of the mechanical equipment.

This section provides the primary generic Requirements and Criteria (R&C) for the design of components which will reliably function as necessary and appropriate in their respective systems.

The secondary R&C for the design of components which will function (or malfunction) in a manner that does not threaten the health and safety of the public and the plant personnel; which will be maintainable or replaceable; and which will minimize the costs of acquisition and operation--without compromising the functional, safety, and maintainability criteria are discussed below in Section 8.3.

Specific design criteria for individual mechanical components will be defined and presented within the drawings and specifications used to fabricate and/or procure the individual component.

8.1.1 APPLICABLE EQUIPMENT

The R&C in this design guide will apply to all mechanical equipment and vessels including the mechanical equipment which will be modified for remote operation and/or replacement (by others) for use in areas subject to radiation. The equipment addressed by this design guide includes, but is not limited to:

a. Rotating Devices - pumps, blowers, etc.

b. Pressure Vessels and Tanks

c. Heat Exchange/Transfer Components

d. Material Handling Components

e. Specialty Equipment

8.1.2 NON-APPLICABLE EQUIPMENT

The R&C in this design guide do not apply to the equipment (designed/specified by others) for Fire Protection, HVAC, Process/Facility

Control, Electric Power Distribution and Control, Piping and Valves, nor to the modifications made to any mechanical equipment necessary for remote operation and/or maintenance. These R&C are also inapplicable to in-cell material handling equipment.

8.2 CODES, STANDARDS, AND SOURCE DOCUMENTS

This section provides a listing of those documents which guide or direct the specifics of the design of many, if not all, of the individual equipment items. The hierarchy of these documents is:

Specific system and/or component R&C as defined by such documents as the HWVP specific Functional Design Criteria (FDC) and Technical Design Package (TDP).

Those codes, standards, and regulations which define performance limits to ensure the health and safety of the public and plant personnel. Typically, these include portions of the Code of Federal Regulations (CFR) and regulations promulgated by agencies such as OSHA, the EPA, the NRC, and the DOE. Safety R&C established by the State of Washington and by the WHC are also included. In addition, there are documents such as the Hanford Plant Standards (HPS) and those sections of the ASME Code related to the structural integrity of pressure-retaining components.

Nationally recognized codes and standards which define design practices to promote the quality and reliability of the finished product.

The specifically applicable portions of a code, standard, or source document are excerpted and included with the other R&C, in this design guide, for each system and its individual components. This will be done wherever practical, depending on the volume of the material.

8.3 GENERAL CONSIDERATIONS

This section defines the nature of the R&C and provides an indication of their relative importance to the design process. The intent is to enable the designer or engineer to choose the more important of conflicting R&C. Here, and in subsequent sections of this design guide, the initially listed R&C should take precedence over those that follow.

8.3.1 FUNCTIONAL R&C

These R&C are intended to ensure that the designed/engineered component will perform satisfactorily over the entire specified range of operating and emergency (if any) conditions. The R&C for the design operating range of a given component will be limited to a specified portion of the capacity or operating range defined by the manufacturer. This is intended to maximize the equipment reliability and lifetime.

8.3.1.1 Duty Requirement

Equipment will be designed and/or specified for continuous operation.

8.3.1.2 Detail Design

The functional design and fabrication drawings for equipment such as vessels and heat exchangers will be based on detailed calculations in accordance with the appropriate codes and standards.

8.3.2 SAFETY R&C

These R&C are intended to ensure that the designed/engineered component will not, during normal operation or following its malfunction, pose a threat to the health and safety of the public or the plant personnel. Similarly, a failure or malfunction in a connected or nearby system must not be able to cause an unsafe failure or malfunction of the component to be designed.

8.3.2.1 Equipment Failure

The failure of equipment and individual components will be evaluated for the creation of unsafe conditions (FDC 1.3.5.6).

8.3.2.2 Process Vessel Vent System

A separate Process Vessel Vent System (PVVS) will be provided for vapors and off-gas from those process vessels not served by the Melter Off-Gas System. Those gases will be collected in a common header, treated, and routed to the facility exhaust ventilation system. The PVVS will be capable of decontaminating the vapors and off-gases so that radioactive and toxic component concentrations, following filtration in the facility exhaust system, will meet the requirements for stack release to an uncontrolled area as defined in RHO-MA-139. The purpose of the PVVS is to prevent hydrogen buildup in vessels, decontaminate the vapors and off-gases, and maintain a subatmospheric differential pressure sufficient to maintain containment (FDC 2.2.7).

8.3.2.3 ASME Code

The configuration, material, design details, attachments, and connections for tanks, vessels, heat exchangers, etc., which contain fluids at pressures of 15 psig or more, will be in accordance with the requirements of the ASME Code, Section VIII, Division I. However, only those vessels, tanks, etc., located in areas which may be occupied by any personnel will require 'code stamping'.

8.3.2.4 Pipe Fittings

The flanges, other pipe fittings, and threaded connections on vessels/tanks designed in accordance with Section VIII requirements

will be designed/specified in accordance with the requirements of applicable ANSI standards.

8.3.2.5 Valve Operators

Solenoid-valve coils will be designed/specified for continuous operation. A fail-safe condition must result from any loss of power to a valve operator.

8.3.3 RADIATION PROTECTION R&C

These R&C will be applicable in the event that the mechanical item being designed is exposed to, or contains, radioactive material. Provision must be made for protecting operating and/or maintenance personnel by shielding or decontamination as might be needed.

8.3.3.1 Remote Operation and Maintenance

In-cell equipment will be designed/specified for remote operation and maintenance (FDC 1.3 & 1.3.4). In-cell components will be designed/-specified to enable remote replacement (FDC 3.1).

8.3.3.2 ALARA Conditions

Shielding of equipment or the location of equipment in shielded areas will enable achievement of ALARA conditions for operating and maintenance personnel (FDC 1.3.5.2).

8.3.4 IN-SERVICE INSPECTION AND MAINTENANCE R&C

All mechanical items will require some degree of in-service inspection and maintenance (ISI&M) ranging from infrequent visual observations to frequent testing of some design parameter. The ISI&M R&C are intended to ensure consideration, during the design and engineering, of the need for space, access, location and orientation to allow for inspection, repair and, if necessary, replacement. Included in this consideration must be space and access for personnel, equipment, and tools.

8.3.4.1 Decontamination

Equipment design/specifications should consider the need for decontamination as a prelude to maintenance operations. This includes the potential damage from exposure to decontamination solutions (FDC 2.2.2 & 2.3).

8.3.4.2 Space and Access

The placement and orientation of equipment must ensure the availability of space and access for all anticipated maintenance activities.

8.3.5 COST AND EFFICIENCY R&C

As long as the preceding R&C are met, consideration should be given to minimizing the procured cost and maximizing the operating efficiency and life of the component.

8.3.5.1 Limit Contaminated Volume

Filters will be located as close as practical to the equipment being serviced (FDC 2.4).

8.3.5.2 Smooth Surfaces

Equipment surfaces will be as free as practical from crevices, protrusions, and ledges to minimize decontamination operations (FDC 2.4).

8.3.5.3 Design Life

Replaceable equipment and components will be designed/specified for a 20-year life, 40 years for nonreplaceable equipment.

8.3.5.4 Operating Range

The conservative end of operating ranges for equipment will be the basis for design/specifications (TDP 1/100).

8.3.5.5 Make or Buy

Commercially available equipment, as received or modified, should take precedence over custom-fabrication as the means of equipment acquisition.

8.3.5.6 Human Engineering

All equipment requiring human operation will be designed/specified according to the human engineering criteria of MIL-STD-1427C.

8.3.5.7 Standards

Unless specified otherwise, the manufacturer's standards will be satisfactory for purchased equipment.

8.3.5.8 Spare Parts List

Procurement specifications should require the manufacturer to provide a listing of recommended spare parts.

8.3.6 MATERIAL AND FABRICATION PROCESSES

8.3.6.1 Materials

The materials of which equipment is fabricated will be selected to resist the corrosive effects of any fluids contained by the

equipment, or to which the equipment might be exposed. Protective coatings will be used on all exposed carbon steel surfaces.

8.3.6.2 Wiring

Exposed electrical wire, terminals, or connectors will not be used.

8.3.6.3 Welding

Welding requirements will be as defined in Subsection 8.4.8.1.

8.3.7 QUALITY ASSURANCE/IMPACT LEVELS

For detailed information on impact levels, see Subsection 2.5.4.

8.3.8 SAFETY CLASSIFICATION

For detailed information, see Section 2.5.

8.4 MECHANICAL DESIGN CONSIDERATIONS AND STANDARD PRACTICES

8.4.1 TANKS AND VESSELS

8.4.1.1 In-Cell

Location of Fittings. Fittings for remotely made/broken connections will not be located below the maximum anticipated liquid level. All fittings which are located below the maximum anticipated liquid level will be attached by welding in accordance with the Section VIII criteria.

Seismic design criteria need not be applied.

8.4.1.2 Ex-Cell

Double-Wall Construction. Tanks containing flammable, hazardous, or regulated substances will be of double-wall construction with provisions for leak detection between the walls. The requirement for detecting leak paths through the outer wall is specified on the P&IDs.

Low Pressure Design. Low pressure (<15 psig) tanks, and their vacuum relief devices, should be designed/specified in accordance with the requirements of API 650. Any connecting flanges should be in accordance with API 605.

Flat Bottoms. Flat-bottom vessels will be sloped to a single potential drain point.

8.4.2 VESSEL DESIGN

This Basis for Vessel Design and Analysis provides criteria and data required by Paragraph U-2 of the ASME Code, Section VIII, Division 1, and establishes the additional design and analysis requirements for pressure vessels used on this project. Each pressure vessel will be designed and fabricated in accordance with the ASME Boiler and Pressure Vessel Code, Section VIII, Division 1. Stamping with the ASME U-Symbol according to UG-116 through UG-119 is required.

8.4.2.1 Pressure and Temperature

- Coincident design pressure and temperature will be as shown on the process data sheets. This will be the vessel pressure and temperature stamped on the vessel nameplate. The vessel will not be designed for the maximum allowable working pressure (MAWP) as defined in the ASME Code, Paragraph UG-98.

- The basis for the calculated shop hydrostatic or pneumatic test pressure will be in accordance with the ASME Code, Paragraph UG-99(b) and UG-100. If corrosion allowance is specified, the test pressure will be multiplied by the ratio of new thickness over corroded thickness.

- Where the process data sheet for a vessel specifies vacuum design, use 5 psi minimum external design pressure.

8.4.2.2 Corrosion Allowance

- Corrosion allowance for vessel shell, heads, and nozzle necks will be as specified on the process data sheets.

- Corrosion allowance for removable internal parts (except demister wire screens, packing, etc.) will be one-half of the vessel corrosion allowance and will be applied to all exposed surfaces.

- Corrosion allowance for nonremovable internal parts that are not coated with a corrosion-resist material will be the same as the vessel corrosion allowance and will be applied to all exposed surfaces. The minimum corroded thickness of nonremovable internal parts will be 1/8-inch.

8.4.2.3 Shell and Head

Minimum thickness will be the greater of:

a. 1/4-inch for carbon steel, or 3/16-inch for stainless steel and nonferrous material including corrosion allowance, or

b. 0.0025 x vessel diameter in inches including corrosion allowance, or

c. 0.0017 vessel diameter in inches, plus corrosion allowance.

The thickness of reinforcement pads, when used, will not be:

a) Less than minimum thickness specified in a above or

b) Less than 3/4 times the nominal thickness,

c) Nor greater than 1-1/2 times the nominal thickness for the head or shell in the nozzle location.

Integral reinforcement of openings may be provided by excess thickness of the vessel head or shell, when economically justified.

8.4.2.4 Heat Treatment

- For stainless steel vessels, formed heads will be solution heat-treated prior to welding. Post-weld heat treatment following welding is prohibited.

8.4.2.5 Radiography

All pressure-retaining butt welds of UW-3 Categories A, B, or C will be examined by spot radiography (RT-3) in accordance with Paragraph UW-52 for all Category III vessels and by full radiography (RT-1) in accordance with Paragraph UW-51 for all Safety Class I and II vessels.

8.4.2.6 Earthquake Design

- Consideration of earthquake effects on the design of vessels is accomplished utilizing a static earthquake force and then designing the vessel in accordance with the other provisions of this document.

- Seismic input is generally in the form of static coefficients. These coefficients are supplied by the Structural Engineering Department.

8.4.2.7 Loading Conditions and Allowable Stresses

- Loading conditions to be considered are given in ASME Code Section VIII, Division 1, Paragraph UG-22.

  a. Nozzles will be designed for loads and moments from external piping and equipment.

  b. Significant loadings at nozzles are provided by Pipe Stress Engineers. These loadings will be used to determine stresses in the nozzle and in the vessel shell.

  c. Appurtenances welded to shell or head for supports or guides will be designed for all conditions of loading, including handling.

- General primary membrane stresses and combined primary membrane and primary bending stresses through the thickness, at design pressures and temperatures, when combined with all design loadings will be within the prescribed limits of ASME Section VIII, Division 1, Paragraph UG-23. When tornado or earthquake (DBE) is included as design loading, 90% of yield strength will be the allowable stress.

8.4.2.8 Vessel Supports and Anchorage

- Each vessel will be provided with supports that are designed for all conditions of loading. Each vessel not to be removed remotely will be anchored to a concrete footing or wall, or from a structural support. Vessels located inside requiring remote removal will not be anchored but will be laterally restrained by trunnions.

  a. Vertical vessels will be supported on lugs or angle legs welded to the vessel shell or on structural shapes welded to flat bottoms.

  b. Horizontal vessels will be supported on two steel saddle supports welded to the vessel.

- Anchor bolts for vessels will be designed for all conditions of loading.

- Foundations will be designed by the Structural Engineering Department (see Section 10). The adequacy of the quantity, size and locations of anchor bolting for vessels will be verified by the Structural Engineering Department.

8.4.2.9 Vessel Attachments

For all vessels located in-cell, all internal and external attachments will be full penetration or completely seal-welded. All assembly details of lugs or clips used for support, handling, shipping, or erection will specify full penetration or continuous seal welds. All details will allow for complete drainage without pockets. Reinforcing pads will have tapped holes plugged and seal-welded prior to shipment after all required testing has been completed.

8.4.2.10 Materials

Vessel materials of construction will be as specified on process data sheets. The specific grade and type of material will be specified by the Metallurgical Engineer.

8.4.2.11 Testing and Inspection

- Each pressure vessel will be hydrostatic or pneumatic pressure-tested in the manufacturer's shop. The test pressure will be determined in compliance with the ASME Code.

- Shop inspection of the pressure vessels will be made by the Contractor and by the Authorized Inspector as defined in ASME Code, Paragraph UG-91(a). The Contractor will perform surveillance inspection in addition to the inspection of the Authorized Inspector. The Contractor's personnel who inspect pressure vessels will be qualified according to Paragraph UG-91(a) of the ASME Code.

8.4.3 ROTATING EQUIPMENT

Power transmission devices will be specified to operate up to 75% of their design rates. Speed reduction of cell equipment will be by electronic means or gears and designed at 50% of rated capacity. Belts will not be used for power transmission.

8.4.3.1 Air Compressors

- ASME Section VIII, Division 1
- ASME PTC-9-1970 (R-79) Performance Test Code
- Electric motor driver, 460V/3PH/60Hz
- NEMA (National Electrical Manufacturer's Association)
- Sound attenuation enclosure for 85 dBA maximum
- CAGI (Compressed Air and Gas Institute), CAGI-PNEUROP-1969, Sound Measurement Test Code.

8.4.3.2 In-Cell Pumps

Pumps must be remotely replaceable.

- Monitored Low Flow. Metering pumps will be used for low flow applications requiring precise fluid monitoring.
- Mounting. Pumps will be vertically mounted when in vessels/tanks.
- Damage Potential. Consideration must be given to the potentially damaging effects from the operation fluids, decontamination processes, and radiation on the casing, seals, and lubricants.
- Pumps will be selected to operate in the middle of their flow and head ranges.

8.4.3.3 Ex-Cell Pumps

- Monitored Low Flow. Metering pumps will be used for low flow applications requiring precise fluid monitoring.

- Drives. Sealless, magnetic drives for acid or other corrosive liquid service.
- Mounting. Use horizontally-mounted centrifugal pumps.
- Seals. Mechanical seals acceptable for utility and nonhazardous fluid services.
- Cooling Tower Pumps. Use vertical turbine-pumps for cooling tower water.
- Damage Potential. Consideration must be given to the potentially damaging effects from the operating fluids.
- Submersible motor pumps will be used for diesel fuel tank and room sumps
- Metallurgy, seals and cooling water will be specified for compatibility with the liquid pumped and any decontamination or washdown requirements.

8.4.3.4 Blowers

a. Out-of-Cell Criteria

- Direct Drive
- ASME Section VIII, Division 1
- Sound Attenuation to 85 dBA

b. In-Cell Criteria

- ASME Section VIII, Division 1
- Stainless steel materials of construction
- Direct drive, no belt drives

8.4.3.5 Agitators

a. Drives

Rotating element agitators will have geared drives designed/ specified in accordance with the requirements of AGMA 460.05.

b. Flanges

Mounting flanges will conform to the requirements of ANSI B16.5.

8.4.3.6 Vacuum Pumps

- American Vacuum Society (AVS) 5.1, 5.3

- Manufacturer's Standards

8.4.4 HEAT TRANSFER EQUIPMENT

In addition to the criteria listed below for heat transfer equipment, in-cell considerations will include PUREX connectors, where required, metallurgy, design for criticality, coatings for decontamination and washdown, code construction, but code stamp not required. Vessel criteria also apply to in-cell exchangers (see Subsection 8.4.2).

8.4.4.1 Cooling Tower

- Cooling Tower Institute (CTI)
- California Redwood Association if wood material is used.

8.4.4.2 Steam Generators

- ASME Section VIII

8.4.4.3 Plate Exchangers

- ASME Sections II and VIII, Division 1

8.4.4.4 Tank Coils

- ASME Sections II and VIII, Division 1

8.4.4.5 Electric Heaters

- ASME Sections II and VIII, Division 1
- UL-listed
- NEC (National Electrical Code)
- 460V/3PH/60Hz

8.4.4.6 Shell and Tube Exchangers

- HTRI (Heat Transfer Research, Inc.)
- ASME Sections II and VIII, Division 1
- TEMA (Tubular Exchanger Manufacturers Association)
- Calculations performed using HTRI methods

8.4.5 HEPA FILTERS

8.4.5.1 Efficiency

Off-gas filters will remove 99.9% of particulates having nominal diameters greater than TBD microns.

8.4.5.2 Enclosures

The filter enclosures will be designed/specified in accordance with the requirements of ANSI N509 and N510.

8.4.5.3 Location/Orientation

The location and orientation of in-cell filters will enable remote replacement.

8.4.6 ELECTRIC MOTORS

8.4.6.1 Small Size

Those motors rated at less than 1/2 hp will operate on single phase, 120 V power.

8.4.6.2 Large Size

Motors rated at 1/2 hp and above will operate on 3-phase, 460 V power.

8.4.6.3 Overcurrent protection for motors will be provided.

8.4.6.4 Radioactivity Resistance

In-cell motors will be suitable for operating in a radioactive environment with a time integrated dose of 1×10^7 rad.

8.4.6.5 Use NEMA standard frames.

8.4.7 MATERIAL HANDLING EQUIPMENT

The primary considerations for material handling equipment are operability, reliability and safety. Material handling equipment will include cranes, hoists, and freight elevator. Expected lifts are not to exceed 75% of rated capacity.

8.4.7.1 Cranes, Hoists and Monorails

- CMAA #70 and 74 (Crane Manufacturers Association of America)
- HMI 100-74 (Hoist Manufacturers Institute)
- ANSI B30.2, B30.10, B30.16, B30.17
- MMA (Monorail Manufacturers Association) specifications for Underhung Cranes and Monorail Systems

- FDC Rev. 4, Section 6.1.2, SDRD Rev. 3, Section 5.5

8.4.7.2 Elevator

- ANSI A17.1
- OSHA for safety

8.4.8 WELDING

8.4.8.1 Welding Design

Welding design will be in accordance with ASME and AWS code requirements. In conjunction with these code requirements, the Contractor's Weld Procedure Specification (WPS) and Procedure Qualification Record (PQR) will be submitted for approval to ensure compliance with welding design requirements.

8.4.8.2 Weld Symbols and Nomenclature

All welding symbols and nomenclature used on this contract will be AWS standards.

8.4.8.3 Weld Testing and Examination

The above-referenced codes and standards provide for certain minimum NDE testing and examination requirements. If certain critical items need more stringent testing and examination, then additional requirements will be imposed.

The requirements may include: spot or full radiography, Brinell hardness, ultrasonic thickness, dye penetrant or other testing where service dictates these requirements by service design. Seamless welded in-cell piping will be required to be corrosion-tested in accordance with ASTM A262, Practice C.

8.5 SPECIFICATIONS

8.5.1 SPECIFICATIONS AND FLUOR DIMENSIONAL OUTLINES (FDOs)

8.5.1.1 The majority of mechanical items will be specified by means of performance specifications which will include narrative sections, attachments and mechanical data sheets.

8.5.1.2 Equipment such as heat exchangers and vessels will be designed in detail by means of calculations and contract drawings. Configuration, size, materials and other requirements will be specified.

8.5.1.3 FDOs will be prepared to identify interfaces, power requirements, weights, clearances, outline dimensions, recommended manufacturer and other pertinent details and then distributed to other engineering disciplines.

8.5.2 Specifications will be prepared in accordance with the applicable section of the PM/CM.

8.6 DRAWINGS

8.6.1 Drawings will be prepared in accordance with Section 4.4 of the PM/CM.

8.6.2 Mechanical Drawings will be dimensioned and toleranced in accordance with ANSI Y 14.5M.

8.6.3 To ensure standardization of drawings, a mechanical design drawing guide will be used for detail design.

8.7 SPECIFIC SYSTEMS AND COMPONENTS

8.7.1 The Design Basis for special mechanical components will be based on the General R&C requirements identified in Section 3.0 and as specified on the process data sheets. Task requirements and design status for specific mechanical components will be documented prior to the start of detail design.

SECTION 9.0

PIPING

BASIS FOR DESIGN

TABLE OF CONTENTS

SECTION			PAGE
9.0	PIPING		1
	9.1	SCOPE	1
		9.1.1 Engineering and Design Requirements	1
		9.1.2 Glossary, Acronyms, Abbreviations and Symbols	2
		9.1.3 Not Used	3
		9.1.4 Plant Design Life - See Section 2.0	3
		9.1.5 Process Design Data - See Section 3.0	3
	9.2	CODES, STANDARDS, REGULATIONS AND OTHER GOVERNING DOCUMENTS	3
		9.2.1 Introduction	3
		9.2.2 Governing Code	4
		9.2.3 Additional Codes and Standards	4
	9.3	PIPING ENGINEERING/DESIGN	4
		9.3.1 Scope	4
		9.3.2 Codes and Design Criteria	6
		9.3.3 Building Layout and Architectural-Type Design Criteria	7
		9.3.4 Human Factors Engineering	11
		9.3.5 Decommissioning	11
		9.3.6 Piping Design Layout Criteria	12
		9.3.7 Drawings and Design Procedures	39
	9.4	PIPING MATERIAL ENGINEERING	41
		9.4.1 Piping Material Specifications	41
		9.4.2 Specialty Item Lists	42
		9.4.3 Coatings Specifications	43
		9.4.4 Thermal Insulation Specifications	43
		9.4.5 Cathodic Protection Specifications	43
		9.4.6 Pipe Line Lists	44
		9.4.7 Valve Lists	45
	9.5	PIPING STRESS ENGINEERING	45
		9.5.1 Scope	45
		9.5.2 Applicable Codes and Standards	45
		9.5.3 Specifications	47
		9.5.4 Piping Flexibility Analysis Procedure	47
		9.5.5 Extent of Analysis	56
	9.6	PHYSICAL (PLASTIC) MODEL	58
		9.6.1 Scope	58
		9.6.2 Detail Design Model	58

THIS PAGE INTENTIONALLY
LEFT BLANK

9.0 PIPING

9.1 SCOPE

9.1.1 Engineering and Design Requirements

This section covers the general engineering and design requirements for Piping Engineering and Design scope of work for the Hanford Waste Vitrification Plant (HWVP) to be constructed within the 200 East Area of the DOE Hanford Site in the State of Washington.

9.1.1.1 Project Overview - See Introduction Sections 1.0 and Process Engineering Section 2.0.

9.1.1.2 Piping Design

The piping design will include all applicable elements as defined in this document for the following buildings, facilities and systems:

a) Vitrification Building;

b) Manipulator Repair Building;

c) Canister Storage Building;

d) Fan House;

e) Sand Filter Building;

f) Frit Storage/Cold Chem Building;

g) Mechanical/Electrical Services Building;

h) Operations Control/Regulated Entrance Building;

i) Switchgear/Generator Building with Associated Underground Tankage;

j) Waste Hold Tank Vault & Building;

k) Cooling Tower;

l) Solar Evaporation Tank;

m) Exhaust Stack & Pump House;

n) Operations Annex Building;

o) Firewater Tank & Pump House;

p) Raw Water Booster Pump House;

q) Intra-Area Transfer Piping;

r) Utility Systems and Clean Drain System up to the Existing System Interface;

s) Underground Fire Protection Systems; and

t) HVAC Chilled Water System.

9.1.1.3 Piping Interface with Existing Systems

a) Process Systems

The only process piping tie-in to existing or by other contractor(s) features are the encased feed and waste transfer lines and their spares. The interfacing points for the feed transfer pipeline shall be the diversion box for the RLST, at the HWVP end. The interfacing points for the waste transfer pipelines shall be the diversion box (241-ER-152) for the WHT, at HWVP end. (TDP-Section 3, Item 210). The utility piping tie-ins to existing lines are - 225 lb. steam, sanitary water, raw water/firewater, and clean drain.

b) Utility Systems

- Sanitary Water
- Raw Water
- Clean Drain System

9.1.2 Glossary, Acronyms, Abbreviations and Symbols

- Shall - denotes a requirement
- Should - denotes a recommendation
- Will - expresses a declaration of purpose or simple futurity

Abbreviations

- FDC Functional Design Criteria (Baseline Document)
- TBD To Be Determined
- Technical Data Package (Baseline Document)
- For additional acronyms, abbreviations and symbols, see Section 2.2.

9.1.3 Not Used

9.1.4 Plant Design Life - See Section 2.0

9.1.5 Process Design Data - See Section 3.0

9.2 CODES, STANDARDS, REGULATIONS AND OTHER GOVERNING DOCUMENTS

9.2.1 Introduction

- This section will provide a summary listing of all codes, etc., that have been listed in the various Piping Engineering sections.

- Piping Engineering and Design will be in compliance with the applicable sections outlined in the Functional Design Criteria SD-HWV-FCD-001, Revision 3 and the Technical Data Package SD-HWV-DP-001, Revision 4.

- Department of Energy (DOE) Orders

DOE Order 6430.1A dated 04-06-89	General Design Criteria for Department of Energy Facilities
DOE Order 5480.1B	Environmental Safety and Health Program for DOE Operations.
DOE Order 5632.4	Physical Protection of Security Interests

- Human Engineering Design Criteria for Military Systems, Equipment, and Facilities (MIL-STD-1472C).

- Uniform Building Code (UBC) 1988 Edition.

- National Fire Protection Association (NFPA) 1987 Edition.

- Occupational Safety and Health Act (OSHA).

- Hanford Plant Standards

HPS-156-M Revision 1	Standard Specification for Compressor Supplied Breathing Air Systems (FDC-4.5.2.3).
SDC-1.2	Hanford Plant Standards and National Codes and Standards.
SDC-3.2	Minimum Depth of Underground Water Lines

- Hanford Plant Design Guides

DG-405-I, Revision 3	Guide for Instrument Air Systems (FDC-4.5.2.2).
SD-RE-DGS-002, Revision 2	Jumper Design Guide
HS-BS-0084, Revision Basic	Jumper Fabrication

- U.S. Department of the Army

  TM5-814-1 Sanitary and industrial wastewater collection - gravity sewers and appurtenances.

9.2.2 Governing Code

- ANSI/ASME B31.1, 1983, American National Standards Institute (FDC-4.3.2).
- ANSI/ASME B31.3, 1987, American National Standard Institute (FDC-4.3.2).

9.2.3 Additional Codes and Standards

Bottled gases and associated piping shall be in accordance with Compressed Gas Association guidelines (CGA 1989)(FDC-4.3.2).

9.3 PIPING ENGINEERING/DESIGN

9.3.1 Scope

The Scope of Work for Piping Engineering/Design covers design models, jumper fabrication drawings, isometrics, detail drawings and plan and section design drawings for process and utility systems for those areas of the Hanford Waste Vitrification Plant (HWVP) listed below:

9.3.1.1 Vitrification Building and process support buildings with associated underground tankage, cooling tower and solar evaporation tank.

a) Intra-Area transfer piping for slurry feed from diversion box to receipt and lag storage tank; and process waste from waste hold tank to diversion box (241-ER-152).

b) Utility systems and clean drain system up to the existing system interface.

c) Drainage systems.

d) Underground fire protection system.

9.3.1.2 HVAC Chilled Water System.

9.3.1.3 Remote jumpers for piping, electrical, and instrumentation within cell areas. Embeds and fixed piping for in-cell systems. Remote jumpers for process transfer tunnels of the Vitrification Building, ER-152 and TBD diversion boxes and Waste Hold Tank Vault and Building.

9.3.1.4 In Subsection 9.3.1.1, the following items are excluded from the Scope of Work for Piping Engineering/Design:

a) Instrument lines downstream of branch take-off block valves (except as noted in Subsection 9.3.1.3) are designed by Control Systems Engineering.

b) Manually operated valves used in remote operation areas - See Instrumentation and Control Design Basis (Section 7.0).

c) Fire Sprinkler System - see Fire Protection and Detection Design Basis (Section 11.0).

d) Plumbing System - See Architectural Design Basis (Section 4.0).

e) Eyewash and safety showers; and drinking fountains - See Architectural Design Basis (Section 4.0) and Subsection 9.3.6.2.0 for requirements.

f) Penetration closures and sealant details for walls, floors, ceilings, and roofs - See Architectural Design Basis (Section 4.0).

g) Storm Water System - See Structural/Civil Design Basis (Section 10.0).

h) Roof Drain System - See Structural/Civil Design Basis (Section 10.0) and Architectural Design Basis (Section 4.0).

i) Sanitary Sewer System - See Structural/Civil Design Basis (Section 10.0).

j) Operations Control/Regulated Entrance Building - Only the utility header system between the Vitrification Building and this building is in Piping Designs Scope of Work.

9.3.1.5 Not used.

9.3.1.6 Codes, Standards, Regulations and Other Governing Documents

Criteria for Piping Engineering/Design will be from the sources listed in Section 9.2 and Subsection 9.3.2.

9.3.1.7 Specifications

Specifications for process and utility piping systems will be as stated in Section 9.2.

9.3.2 Codes and Design Criteria

9.3.2.1 Department of Energy (DOE) Orders

a)	DOE Order 5480.1B	Environmental Safety and Health Program for DOE Operations
b)	DOE Order 5632.4	Physical Protection of Security Interests
c)	DOE Order 6430.1A dated 4-6-89	General Design Criteria for Department of Energy Facilities

9.3.2.2 Human Engineering Design Criteria for Military Systems, Equipment, and Facilities (MIL-STD-1472C).

9.3.2.3 Uniform Building Code (UBC) 1988 Edition

9.3.2.4 National Fire Protection Association (NFPA) 1987 Edition

9.3.2.5 Occupational Safety and Health Act (OSHA).

9.3.2.6 Hanford Plant Standards

a)	SDC-1.2	Hanford Plant Standards and National Codes and Standards
b)	SDC-3.2	Minimum Depth of Underground Water Lines

c) The breathing air system in Zones II and III shall be in accordance with:

HPS-156-M, Revision 1	Standard Specification for Compressor Supplied Breathing Air Systems (FDC-4.5.2.3)

9.3.2.7 Hanford Plant Design Guides

a) Out-of-cell instrument air piping shall be in accordance with:

DG-405-I, Revision 3 Guide for Instrument Air Systems (FDC-4.5.2.2)

9.3.2.8 Westinghouse Hanford Company

a) In-cell remotely, removable piping, electrical conduit and instrumentation referred to as "Jumpers" will be designed in accordance with:

SD-RE-DGS-002, Revision 2 Jumper Design Guide

b) All jumpers will be fabricated in accordance with:

HS-BS-0084, Revision Basic Jumper Fabrication

9.3.2.9 U.S. Department of the Army

a) TM5-814-1 Sanitary and industrial wastewater collection - gravity sewers and appurtenances.

9.3.2.10 Other Codes and Governing Documents

Piping governed by codes other than ANSI B31.3 shall be as follows:

a) Per ANSI B31.1

b) Cylinder gas piping shall be designed in accordance with Compressed Gas Association guidelines (CGA 1989)(FDC-4.3.2).

c) Piping other than embedded and remote lines, rack piping and jumpers shall be designed in accordance with Section 2.5 (FDC-4.3.2).

9.3.2.11 Bottled gases shall be supplied to the service area as required for facility operation. Recommendations of the Compress Gas Association (CGA 1989) shall be used as applicable (FDC-4.5.4).

9.3.3 Building Layout and Architectural-Type Design Criteria

Physical Design Criteria

Note: For Life Safety Criteria, see Section 9.3.6.7b.

9.3.3.1 The structures and layouts for HWVP shall conform to the applicable Hanford Plant Standards (HPS), DOE Order 6430.1A, NFDA Codes and the Uniform Building Code (UBC) (FDC-4.1.6) and (FDC-2.1).

9.3.3.2 See Mechanical Design Basis (Section 8.0) for additional design criteria on the following:

a) Stairways are to be located in accordance with National Fire Protection Association (NFPA) Code 101-Life Safety Code 2B.2.6.1 (TDP-Sect. 5, Item 230).

b) A minimum number of entrances will be provided for security areas. However, exits will comply with NFPA 101. Some exits will be provided for emergency use only. At least two exits will be provided in rooms where hazardous materials are handled (6430.1A-0110-13.2.1 and 0110-99.0.4).

c) In those areas where an accidental breach of a primary confinement system could expose personnel to radioactive material, a distance of 75 feet as measured by the method in the NFPA 101 will be the maximum travel distance to ensure that personnel can exit through the next confinement barrier. This barrier is the partition separating two different air zones, the area of refuge being on the upstream side of the barrier. The ensured airflow through the barrier will be in the direction opposite of exit travel (6430.1A-0110-99.0.4).

d) Corridor width(s) can be a controlling factor in the overall building size, and corridors will be no wider then required for facility functions. All corridors and door openings will meet NFPA 101 or more stringent requirements based on the hazard of materials to be handled or operations to be performed, as established by the cognizant DOE health and safety authority. The size and arrangement of interior corridors will accommodate the following (6430.1A-0110-99.0.4):

- Personnel traffic flow patterns
- Safety of building occupants
- Movement of equipment (including initial equipment installation, facility operations, and future replacement or removal)
- Ultimate decontamination and decommissioning of the facility, including equipment required during decontamination

e) A means of egress, a continuous and unobstructed way of exit travel, will be provided from any normally occupied point in a building, elevated equipment, or structure. Minimum widths of egress will be in accordance with OSHA and NFPA 101.

f) Facility design features shall confine contamination to the vicinity of the source and minimize a contamination spread (FDC-1.3.5.3.).

g) The canyon crane shall be contact maintained in an area isolated with a contamination control barrier (FDC-4.1.8.1). A canyon crane maintenance area shall be provided for crane decontamination to facilitate maintenance and to minimize radiation exposure to personnel from the canyon radiation field (FDC-4.1.6.2).

h) Provide crane maintenance platforms, allowance for future adjustments of crane rail alignment and elevation, and an allowance for replacement of the crane (FDC-4.1.8.1).

i) Maintenance platforms shall be provided where needed for contact work on the crane (FDC-4.1.8.1).

j) The process cells shall have removable covers (if required) to permit access as necessary (FDC-4.1.6.2).

k) The process area shall be designed to achieve maximum radiation and contamination control, ease of personnel access, material handling, decontamination, operation, and proper ventilation (FDC-4.1.6.2).

l) The location of the mechanical and electrical equipment shall facilitate easy access, optimum space utilization, and low installation and maintenance costs while providing building services (FDC-4.1.6.1).

m) Routes or methods shall be provided to carry chemicals to a chemical makeup area and empty waste drums to the area servicing the process cells. Routes and methods shall also be provided to transfer equipment between floors (FDC-4.1.6.1).

9.3.3.3 If ventilation equipment is located on the Vitrification Building roof, stairwells and elevator access will be required. Access to clean ventilation equipment on the roof is not to be provided through the regulated building--except as an emergency escape route (TDP-Section 5, Item 230).

9.3.3.4 Because of safety considerations and the possible need for rapid evacuations, no provisions for physically handicapped are required in the Vitrification Building (TDP-Section 5, Item 120; 6430.1A-0110-99.2.3). See Architectural Engineering Basis (Section 4.0) for Design for handicapped requirements in other areas of the facility.

9.3.3.5 Passageways, pipes or conduit will not be located under any portion of the remote process cells (TDP-Section 5, Item 200).

9.3.3.6 Samples of process liquids will be required for analyses; therefore, capability for obtaining a sample from each process vessel will be provided. Samplers for several process vessels should be located together in master slave manipulator-operated shielded sample cell(s). The sample cell(s) will be located to minimize sample lift to provide 15 feet of unobstructed space for pulling manipulators and to drain sample lines of process liquids and flush water to the process vessel (TDP-Section 4, Item 520, and Section 15, Item 200).

9.3.3.7 To ensure isolation between the supply and exhaust air there shall be no common walls between supply and exhaust air tunnels or ducts (FDC-4.2.2.2).

9.3.3.8 The design shall provide flexibility for future expansion to canister storage (FDC-2.2.12). Building expansion increment(s) should operate independently (TDP-Section 5, Item 500). Initial and additional canister storage facilities shall utilize the same canister loadout facility while satisfying governing criteria (FDC-2.2.12).

9.3.3.9 Sufficient area should be reserved to build a replacement Zone 1 filter building and an additional final polishing high efficiency particulate air (HEPA) filter downstream of, and adjacent to, the air tunnels of the original Zone I filter building (TDP-Section 5, Item 600).

9.3.3.10 Storage facilities will be physically separated from process operations, areas for the storage of nonnuclear materials or equipment, and functions not directly required for storage operations. Where floor storage is operationally required, layout of floor areas and access areas will consider the requirements for secure location of storage containers, traffic control, and segregation (6430.1A-0110-99.0.4). See Structural Engineering (Section 10.0) for physical protection requirements.

9.3.3.11 Not Used.

9.3.3.12 Decommissioning of the HWVP will be considered in the layout of the facility (TDP-Section 5, Items 140). For decommissioning requirements, see Subsection 9.3.5.

9.3.3.13 The following concepts shall be utilized, as practicable, in the HWVP design (FDC-5.3.1):

- Locate complex components including electronic devices or those having a high probability of failure in contact maintenance areas.

- Identify equipment repair methods and egress routes.

- limit incell equipment to only that required.

9.3.4 Human Factors Engineering

9.3.4.1 The HWVP will be designed to be comfortable and natural for humans to operate and maintain. Design considerations shall be given to the guidelines in Military Standard 1472C, Human Engineering Design Criteria for Military Systems, Equipment, and Facilities. Deviations from MIL-STD-1472C will be allowed, if compliance is not cost-effective, providing the deviations do not compromise the operability and maintainability of the facility. Human factor concerns include the following (FDC-5.3.2 and 4.4.1; 6430.1A-1300-12.4.2):

a) Instrument readout shall be located at average eye elevation for ease of reading and controls. Such instrumentation shall be located to permit visual monitoring without drastic shifts of body position (FDC-5.3.2).

b) Equipment shall be accessible for ease of operation and maintenance (FDC-5.3.2).

c) Manipulators and viewing equipment will be properly located for ease of remote operation.

d) Facilities shall be designed for both men and women operators (FDC-5.3.2).

e) Stairwells, operating galleries, service corridors, aisles, ramps, and freight elevator shall be designed to accommodate personnel access and routine movement of the largest foreseeable weight and size freight on and between floors (FDC-2.4 and 4.1.6.2).

f) Operating galleries, service galleries, and remote process sampling capabilities shall be provided for process operation (FDC-4.1.6.2).

9.3.5 Decommissioning

9.3.5.1 The design of the HWVP shall include features that shall facilitate decontamination during facility usage and also for decommissioning after the facility life cycle. Guidance for design of process equipment to facilitate eventual decommissioning will be obtained from ANSI N300, Design Criteria for Decommissioning of Nuclear Fuel Processing Plants and DOE Order 6430.1A General Design Criteria Manual. The following principles shall be employed to the extent practical (FDC-2.4; TDP-Section 5, Item 140; (6430.1A-0110-99.0.1, 1300-11.1 and 11.2):

a) Process cell penetrations shall be designed to minimize technical and construction problems in the structural

closing and sealing of these penetrations at the time of decommissioning (FDC-2.4).

b) Surfaces shall be free of crevices ledges, and/or protrusions which could collect radioactive materials (FDC-2.4).

c) Floors shall be sloped toward drains (FDC-2.4).

d) Embedded and hot-cell piping systems will be sloped and free of traps, except as required for process isolation (FDC-2.4; 6430.1A-1300-11.2).

e) Drains and similar piping shall have physical provisions for cleaning (FDC-2.4; TDP-Section 5, Item 140).

f) Long runs, curves and turns of internally contaminated ductwork and piping will be minimized (6430.1A-1300-11.2).

g) Such items as service piping shall be kept to a minimum in areas that may become contaminated and shall be arranged to facilitate decontamination (6430.1A-1300-11.1).

h) Provide air lock access to the top of the Sand Filter to permit entry for sand removal and decontamination (TDP-Section 5, Item 140 #15).

i) Contamination barriers, such as cell liners, will be used to avoid contaminating fixed portions of the HWVP.

j) Although a major investment in decommissioning requirements should be avoided, it is desirable to include design features, wherever possible, to facilitate decommissioning (TDP-Section 5, Item 140).

k) Adequate overhead clearance shall be provided for remote transfer of equipment over installed piping (FDC-2.4).

9.3.6 Piping Design Layout Criteria

9.3.6.1 a) Interface with systems within HWVP will be five feet from the building line unless other design considerations will not permit (TDP-Section 8, Item 100; 6430.1A-0260-2).

b) Where continuous services are required, service headers shall be looped and appropriately valved to maintain such services during routine maintenance or system alterations (6430.1A-0110-99.02).

c) The following design criteria will be followed to the maximum extent possible for piping and valves carrying hazardous process fluids (6430.1A-1540-99.0.6).

- Provide pipe sleeves where piping passes through nonshielding concrete walls, floors, and roofs
- Sleeves sloped to drain toward the controlled area
- Space between the pipe and sleeve to be packed and sealed
- Valves designed to operate in the stem-up orientation
- Valves and other connections located to minimize the consequences of leaks
- Process valves not located at low points in the piping
- Minimize embedded piping
- Provide welded joints rather than flanged connections wherever possible; butt welded joints rather than socket-welded joints.

d) The weight of roof-top piping and equipment shall not be carried on any part of the roof assembly, except the structural system.

Penetrations of roofs by pipes and equipment of all types, and by curbs and legs for structural frames to support equipment, shall be minimized. Where possible, equipment shall be contained in equipment rooms and penthouses (6430.1A-0750-3).

e) Similar types of equipment which require contact operator monitoring shall be located in close proximity (FDC-5.3.2).

9.3.6.2 Utility Piping and Drain Systems

a) All interfaces between permanent and temporary portions of the sanitary and raw water system will be designed so that permanent system completion can be accomplished without service interruption to construction users TDP-Section 1; Item 400).

b) All floor drains shall be drained at the low point (FDC-4.1.10). The floor drain system within the Vitrification and Manipulator Repair Building will be designed to dispose of leakage, fire water, and washdown liquids (TDP - Section 5, Item 200). Drainage of firewater runoff will not be at design flow rates due to sprinkler system actuation. Drainage is provided from the sprinkler system drain connection. Fire Department Connections, Water Motors Gong, and Retard Chambers are provided by the wet pipe sprinkler

system design and drain to the outside of the buildings at grade. A collection system will be provided for overflow and drainage from chemical makeup and head tanks (TDP-Section 5, Item 200).

c) Drain funnels will be provided to accommodate non-contaminated and contaminated process and equipment drains and HVAC equipment.

Noncontaminated and contaminated drains shall not be interconnected; however, jetting or pumping from uncontaminated drain systems to contaminated drain systems is acceptable as long as separation and back-flow prevention shall be provided. Curbs shall be provided around equipment subject to oil leakage to prevent flow of oil into the drain system (FDC-4.1.10).

d) Process floor drain piping shall be in accordance with ANSI B31.1. Access for cleanout of all drains and drain lines shall be provided.(FDC-4.1.10).

e) Analytical Facility

- Drains and drain lines located in frequently occupied areas shall be accessible for cleaning and shielded, as required, to reduce or eliminate radiation exposure (TDP-Section 16, Item 100).

- Primary and backup drains shall be provided in each cell working area/section, with access to the Radioactive Liquid Waste Handling System (System 20). Drains shall allow for routine cleaning by rodding out and flushing with water. Connections for flush water shall be provided on the ends of drain headers (TDP-Section 16, Item 400).

- Shielded hot waste, drain lines shall be as short as possible to minimize radiation buildup. Instrument waste lines shall also be flushable with large volumes of water (water jet or auxiliary sanitary flush) (TDP-Section 16, Item 210).

f) The drain systems are listed below.

Vitrification Building

- Radioactive Liquid Waste Drains

- Regulated Liquid Waste Handling Drains

- Clean Drains

Areas Other Than Vitrification Building

- Clean Drains
- The following chemical drains
  - Organic Liquid Waste Drains
  - Acid Waste Drains
  - Caustic Waste Drains

g) All underground drainage systems will have a minimum slope per P&IDs.

h) All drainage systems within the Vitrification Building will have a minimum slope per P&IDs.

i) Void

j) Void

k) Minimum Depth of Earth Cover

1. Frequent Flows

   Where water in pipes and mains is frequently used, causing a regular flow in the line, the minimum earth cover above the top of the pipe will be 30 inches. For pipes and mains located under roads, streets, parking areas, or other locations where the earth cover will be well compacted, the minimum earth cover above the top of the pipe will be 36 inches.

2. Infrequent Flows

   Where water in pipes and mains does not flow normally, or where water is infrequently used (dead end installations, pipe lines servicing safety showers, fire hydrants, etc.), the minimum earth cover above the top of the pipe will be 42 inches.

l) Sanitary water system hose bibs shall be provided for wash-down in nonregulated areas of the Vitrification Building and in all areas of other buildings (TDP-Section 8, Item 200).

m) Where feasible and economical, the steam supply and cooling water lines should be "looped" to minimize outages from repair work (TDP-Section 8, Item 500 and Section 4, Item 410, 415, 430 and 440).

In order to ensure radioactivity confinement in the event of a leak, a closed-loop system shall be used for heating

vessels and equipment that contain or process radioactive materials (TDP-Section 4, Item 430).

n) Design of the process steam system shall allow detection of leaks and include a means of locating leaks should they occur. Capability to purge the contents of the system and decontaminate, flush, and drain the piping and equipment will be provided. Purge points and drains shall be located to minimize spread of contamination and ensure complete emptying of piping and equipment (TDP-Section 4, Item 430).

o) Personnel decontamination showers, eyewashes and safety showers shall be provided in all areas where chemicals are used. These areas include dry chemical storage, liquid cold chemical storage and makeup area, pump pits, Fan House, areas adjacent to the battery banks in the Switchgear/Generator Building and all locations within the Vitrification Building where contact with chemicals is possible. If permanent plumbed facilities are not practical, portable eyewash containers may be acceptable (see Architectural Engineering for Usage [TDP-Section 5-Item 300 and 900]) and (Section 12, Item 400; and FDC-5.1).

p) All regulated areas requiring manned entry will be supplied with breathing air (TDP-Section 15, Item 100).

q) Underground utility lines such as sanitary sewer, water, and gas will not be placed under existing or proposed pavements, except when crossing such pavements or when adequate space is not available. Utility lines will be placed between backslope of road ditch and building, or back of curb.

Water mains shall not be installed in the same trench with sewer lines. Where water mains and sewer lines are installed parallel to roadways, they shall, if practicable, be located on opposite sides of roadways (6430.1A-0203-1.2).

r) Separation of utilities from security-related equipment must be considered when planning utility installations. A special emphasis should be given to maintaining clear ground around security fences and in security areas (6430-1A-0203-1.2). (See Structural Engineering Section 10.0 for clearance requirements.)

Overhead utilities must not pass between secure and nonsecure areas. Utility equipment and supports must not be located so as to conceal or aid an adversary in penetrating a security boundary.

Utilities and sewers that penetrate or pass under a security barrier through an opening of more than 96 square inches in

area and over six inches in the smallest dimension shall provide the same degree of penetration delay as is required for the security barrier (6430.1A-0203-1.4, 0260-2 and 0270-1.3; DOE 5632.4 Chapter II para C7). For additional physical protection requirements, see Structural Engineering. (Section 10.0)

s) Sprinkler risers should be located at an exterior wall. Sprinkler supply lead-ins should run under buildings the minimum distance possible. Where a riser must be located in a potentially contaminated area, consideration should be given to locating the riser exterior to the building in a heated enclosure (6430.1A-1530.9).

t) Where potable waterlines must cross sewers or force mains, waterlines shall pass two feet above the sewer or force main. Where insufficient cover precludes such vertical separation, the sewer or force main shall be ductile iron pipe or shall be fully encased in concrete for a minimum distance of ten feet to each side of the waterline crossing (6430.1A-0270-1.3; TM5-814-1).

Where feasible, sewers or force mains shall not be routed within ten feet to potable waterlines or firelines (6430.1A-0270-1.3).

There will be a minimum of 12 inches clear between the bottom of the waterline and the top of the sewer, and a minimum of six feet horizontal clearance between parallel lines (TM5-814-1).

u) <u>Underground Fire Protection System</u>

1. Fire hydrant branches (from main to hydrant) shall be not less than 6 inches in diameter and no longer than 300 feet. A gate valve shall be installed within each fire hydrant branch to facilitate maintenance.

2. Gate valves shall be installed at maximum intervals of 5,000 feet on long supply lines and at maximum intervals of 1,200 feet on main distribution loops, feeders, and all primary branches connected to these lines. Gate valves shall also be installed at selected points throughout the distribution system to provide system control over each service area. At intersections of distribution mains, one less gate valve than the total number of intersecting mains shall be provided.

3. Fire hydrants shall be installed at a maximum spacing of 400 feet. Fire hydrants shall not be located more than 300 feet from the buildings to be protected. Each

building shall be protected by a minimum of two hydrants.

9.3.6.3 Process Piping

a) Piping Design will locate and route the process piping systems.

b) The block valves and control valves for the process piping will be accessible.

c) Standard long-radius elbows will be used for the out-of-cell process lines. Bends may be used, where practical.

9.3.6.4 Vitrification Building

a) All lines for radioactive solutions which are routed through personnel-occupied areas should be jacketed, equipped for leak detection, shielded or shieldable, easily replaced (unless embedded in building structure), and equipped for flushing, draining, and rodding to a suitable tank for containment and controlled disposal. Embedded piping for transfer of radioactive process solutions into, and out of, the building through shielding walls is also included. The formic acid, nitric acid, and floor drain headers are excluded (TDP-Section 5, Item 200).

b) At nominal 100-ft intervals, sealed access ports from the operating corridor into the process cell exhaust air plenum will be provided. The access ports are to be sized for entry by personnel wearing protective suits. These ports are expected to be used very infrequently, and all necessary support facilities (air locks, breathing air, steps) will be provided by operating personnel. Equipment locations in the operating corridors are to have priority, with the port locations adjusted as necessary (TDP-Section 5, Item 200).

c) For contact-maintained equipment in nonradioactive areas, provide sufficient laydown and workspace (FDC-5.3.3; TDP-Section 15, Item 100).

d) Analytical Facility

- The Analytical cells front wall (i.e., accessible from the operating gallery) service and utilities penetrations shall be utilized to the greatest extent possible for the Analytical Cells (TDP-Section 16, Item 400).

- The front face of each cell, within the operating corridor, shall be kept clear of all protrusions from utilities, service controls, electrical connections,

etc., that could interfere with the operation, maintenance, and removal of the master slave manipulators (TDP-Section 16, Item 400).

9.3.6.5 Vitrification Building (Remote Operation Areas)

The remote operation areas (process cells) are those areas of the facility that handle and process the radioactive waste feed. These areas are unmanned and provide for remote operation and maintenance of the process with the necessary biological shielding for operator safety.

The use of proven PUREX remote design features will be maximized. These include, but are not limited to, the design of remote connectors, remote flanges, dowels, and trunnions.

a) The major portion of the equipment in the remote cells shall be disposed of when failure occurs (TDP-Section 15, Item 200; FDC-5.3.3). The process cells will have a laydown area sufficient in size for the storage of failed equipment prior to disposal. The storage area shall be sufficient to minimize adverse impact on plant operation (FDC-2.2.14). Minor jumper (for description of a jumper see Sections 9.3.6.5.d and 9.3.6.8.c) repairs will be performed in-place. Equipment in this category will be designed to meet the following requirements:

1. The higher failure rate assemblies will be located to minimize replacement impact on other cell equipment (TDP-Section 15, Item 100).

2. They will be repaired or replaced (in hierarchy) by crane, master slave manipulator or electromechanical manipulator (TDP-Section 15, Item 100).

3. The maximum size envelope of process cell equipment will be based on the size and weight limitations of the remote operations apparatus handling a replacement for the equipment in the event of failure or termination of its expected cell life. Consideration will also be given to the physical size limitations of the building pathway that the replacement must travel to enter the process cell.

4. Vessel Arrangements and Details (TDP-Section 3, Item 330 and Section 10, Items 140 and 150).

   - The tank dimensions and design of the SMECT and WATs shall be identical to the degree practicable. The RWCT and DWTT shall be identical to the SRAT, SME, and the MFT, to the degree practicable. Tank

dimensions and design of the FFT and the PFT shall maximize the use of standard tank size.

- The top head arrangement and dimensions of Chemical Process Cell vessels should be standardized regarding the size of agitator and pump openings and the nozzle orientation radius in the interest of standardizing jumper, pump, and agitator designs to the minimum number of configurations.

- The head arrangement of nozzles shall be oriented to be free of obstruction from coils, coil support, or other internal items which would interfere with insertion of pumps, agitators, dip tubes, etc.

- All vessels shall be capable of being drained to a minimum heel commensurate with individual equipment design.

- All penetrations, except normal drains, overflows etc., will be above the maximum operating solution levels of the vessels.

- Vessels should be limited to a minimum number of standard sizes to gain full advantage of utilizing standard accessories and spare parts (i.e., jumpers, pumps, and agitators).

5. Equipment Arrangement and Details

- Commercially available equipment and parts shall be used to the extent practical. Reliability and interchangeability shall be part of all specifications and design requirements. Equipment will be designed for recovery from in-process failures (TDP-Section 15, Item 100).

- Designs should be kept as simple as possible and consistent with the intended purpose for ease of operation and maintenance and to minimize the number of different remote handling fixtures required (TDP-Section 15, Item 100). On more complicated equipment, consider subassemblies which can be removed remotely to facilitate decontamination, repair, and replacement.

- Steam lines to power jets pumps are, to the greatest extent possible, routed outside the hot zone and penetrate the shielding wall as near the jet as possible. Steam lines inside the hot cells should be uninsulated to facilitate decontamination (TDP - Section 10, Item 150).

- Install the steam jets in an orientation that will provide for the free draining of both the steam supply line and the jet discharge line (TDP - Section 10, Item 150).

- Provisions should be made to prevent the section of any solution into the steam lines during premature shutdown of the jet. Suck-back is caused by the vacuum caused as the steam condenses (TDP - Section 10, Item 15).

- The valving that controls the air and steam to the jet sump should be designed to vent lines back to the hot zone when they are in "off" position. This prevents the spread of contamination if the air and/or steam lines are opened for maintenance. The valves should be grouped to facilitate "gang valve" operation (TDP - Section 10, Item 150).

6. Equipment Locating Dowel Pins

- Dowel pins are used for locating and orienting equipment attached to other equipment. Two dowels are normally required to locate an equipment item; these must be of different lengths to enable a crane operator to first engage the longer dowel and then to move slowly to engage the short dowel (TDP-Section 10, Item 140).

7. Trunnions and Trunnion Guides

- Each piece of major in-cell equipment will be provided with permanent trunnions for precise location of the equipment.

b) The flat face of embedded nozzles must be established in a series of parallel vertical or horizontal planes (TDP-Section 5, Item 200).

c) All horizontal surfaces shall be drainable to sumps (FDC-4.1.6.2).

d) All piping and removable components in the hot cells will be designed for remote installation, operation, relocation, maintenance and removal by crane(s) located in the process canyon. An exception is that portions of the vessel vent system piping header are not remotely replaceable. Removable piping jumpers will have PUREX connectors at connections to equipment, wall penetrations and other jumpers. Jumper length and complexity should be minimized to be consistent with equipment and building arrangement

requirements (TDP-Section 10, Item 170). Piping jumpers will be designed utilizing Westinghouse Hanford Company SD-RE-DGS-002, Rev. 2 "Jumper Design Guide" as a guide. Exceptions include the Defense Waste Processing Facility (DWPF) Graylock connector required on Melter Off-Gas (MOG) piping and PUREX I and E connectors with modified connector plates (pin-and-socket) for electrical and instrumentation connections. (TDP-Sections 5 and 15, Item 200; Section 10, Item 170; FDC-4.3.1).

e) Welded connections will be used below the liquid level of equipment in process solution services to the extent practical.

Remote jumper connections will be made above the maximum operating liquid level of the equipment being serviced unless exempted by specific process conditions. Piping systems, including valves, will be designed to be free of low point pockets and sloped toward the process cell equipment to allow for passive evaluation and containment of the flowing media during operations of disassembly and removal.

f) Process piping in the sample cell will be designed for remote installation, operation, maintenance and removal by master-slave manipulators. A remote-operated overhead hoist shall be provided in the sample cell for handling sampler subassemblies whose weight exceeds the lifting capacity of the master-slave manipulators. The hoist shall access the entry/exit port (TDP-Section 15, Item 200). Replacement and maintenance of the hoist and associated components shall be considered in the design (TDP-Section 4, Item 520).

Removable tubing jumpers will have Swagelok-type connectors at connections to equipment, wall penetrations and other jumpers within the sample cave. Tubing jumpers will be designed utilizing Westinghouse Hanford Company SD-RE-DGS-002, Rev. 2 "Jumper Design Guide" as a guide. All piping will be located a minimum of four inches above the floor to allow for cell washdown.

g) The Melter Feed Tank feedlines shall contain a minimum number of bends and the bends shall be 5 diameters radius minimum (FDC-3.2.4).

h) Piping and electrical penetrations through shielding walls will be configured to provide radiation shielding to conform with as low as reasonably achievable (ALARA) guidelines (FDC-1.3.5.2) and (FDC-2.3). For design criteria see Radiation and Shielding Basis for Design (Section 12.0).

i) Utility Piping

Piping Design will locate and route the utility piping systems.

j) Spare Penetrations

The spare penetration requirements will be defined on P&IDs.

- The vessel vent system ratio of spare connections to used connections is 0.5 with a minimum of one spare connection each 15 lineal feet down the length of all remote cells (TDP-Section 3, Item 700).

- At each equipment location (including spare equipment modules), a minimum of one spare penetration for each type of service will be provided where inclusion of spare penetration does not increase the building length. Where space is available, add not less than 20% spare penetrations (TDP-Section 5, Item 200) and (TDP-Section 15, Item 200).

- Embedded piping through which frit or slurry-frit mixtures are transferred shall be replaceable or adequate spares shall be provided (TDP-Section 5, Item 200) and (FDC-4.3.1).

- Process cell termination of spare piping penetration will be provided with dust covers for nonpressure systems and PUREX blank connectors for pressure systems. Spare electrical penetrations will be terminated with a connector and dust cover.

k) "Hot/Cold" Separation

The design and physical configuration of jumpers and wall nozzles in the process cells will preclude the possibility of accidental cross-connecting of radioactively contaminated process streams with utility services that terminate or originate in manned areas of the facility. Hot/cold separation will be imposed as a physical barrier to prevent contamination of contact-maintained operation areas.

l) Provisions for wall blanks in the process cells for future installation of shielded windows and/or manipulators shall be provided (FDC-1.3.4).

9.3.6.6 Design Data

a) Materials

1. Piping materials will be in accordance with applicable specifications (see Section 9.4). Any deviations will be noted on the piping drawings.

2. Flat-face flanges will be installed against flat-face cast-iron valves and equipment.

b) Piping Sizes

1. Minimum pipe size will be 1/2 inch, except for connections to equipment.

2. Pipe sizes 1-1/4 inch, 2-1/2 inch, 3-1/2 inch, and 5 inch will not be used, except where required for connections to equipment and for the fire protection piping systems.

c) Piping Systems

1. The location of equipment and routing of pipe will be based on economics, safety, ease of maintenance, and operation. The alignment of equipment and routing of pipe will be carried out in an orderly manner.

2. Piping will be adequately supported, guided, or anchored so as to minimize vibration, deflection, or the undue transmittal of forces and loads to equipment.

3. Process piping will be routed to avoid high and low point pockets, wherever possible. Where "free draining" or "do not pocket" is noted on flow diagrams, high and low point pockets will be avoided.

4. Piping systems requiring block valves in branch lines at headers will have the block valves located a minimum distance from the header. To minimize line breakage at headers, all 1/2" through 2" branch lines between the headers and block valves will be schedule 160.

5. No space will be provided for installation of future equipment or pipe, except for items indicated in the client-approved contract documents.

6. Closed loop piping systems provide the primary source of heating and cooling for the process vessels in the remote operating areas. All primary cooling and heating equipment will be consolidated into a Zone II area such that lines between this room and remote-

operated areas will be shielded from normally occupied areas.

The closed loop piping systems will be designed so that they may be remotely operated and have the capability to isolate, drain, and flush the system from remote locations.

7. Piping routed through exterior walls, in areas requiring airtight seals, will have seals inside and outside at the point of penetration.

d) Tolerances TBD

9.3.6.7 Clearances

a) Operating and Maintenance Clearances and Accessibility

Minimum clearances for equipment, structures, platforms, and supports should be in accordance with the following:

NOTE: Where these clearances have significant economical impact, alternate clearances may be utilized based on sound engineering practice.

ITEM	DESCRIPTION	DIMENSION
Roads*	Headroom for primary access roads (from the crown)	TBD
	*Headroom for secondary roads (from the crown)	TBD
	Clearance from edge of road shoulders to platforms, equipment, pipe associated with equipment, or enclosures, etc.	TBD
	*Where steam and high-temperature waterlines cross over roadways, a minimum of 14 feet of clearance will be provided (6430.1A-1555-3.1)	
Maintenance Aisles at Grade	Horizontal and vertical clearance for equipment maintenance by hydraulic crane (12 T capacity)	10'-0"
	Horizontal clearance for forklift (5000 lbs capacity) and similar equipment	6'-0"

ITEM	DESCRIPTION	DIMENSION
	Vertical clearance for forklift (5000 lbs capacity) and similar equipment	8'-0"
	Horizontal clearance for equipment maintenance by portable manual equipment (A-frames, hand trucks, dollies, and similar equipment)	3'-0"
	Vertical clearance for equipment maintenance by portable manual equipment (A-frames, hand trucks, etc.)	8'-0"
Walkways	Horizontal clearance, not necessarily a straight line	2'-6"
	Headroom (except for hand wheels)	7'-0"
Platforms	Minimum width.	2'-0"
	Minimum clearance around any obstruction on the platform.	1'-6"
	Headroom.	7'-0"
Exchangers	Minimum maintenance space required between flanges of exchangers or other bolted equipment connections which must be serviced or maintained.	1'-6"
	Clear aisleway for exchanger shell cover removal will be:	
	6'0" clear to provide shell cover end totally accessible from aisleway when using forklift or portable "A" frame.	
	3'0" clear when mobile crane is positioned at channel end to remove shell cover.	
	3'0" clear if shell cover can be removed by forklift or portable "A" frame, with access from roadway	

ITEM	DESCRIPTION	DIMENSION
	beneath pipeway between pipe supports, pumps, etc.	
	3'0" clear when shell is welded and cover is not removable.1'-6"	
Pipe (above-ground)	Clearance between the outside diameter of flange and the outside diameter of pipe or insulation	0'-1"**
	Clearance between the outside of pipe or insulation and structure (wall, column, trench, etc.)	

**With full consideration of thermal movements.

b) Life Safety Criteria

This criteria was extracted from the fire protection and detection design basis.

Use this information as a general design guide. When interpretation is required, consult with our fire protection engineer.

The final life safety compliance approval will be by the fire protection engineer.

ITEM	NFPA 101	UBC
Headroom Within a Means of Egress		
a. Ceiling	7 feet of 6 inches	
b. Projection		7 feet 0 inches
Doors		
a. Width		
1. Minimum clear width	32 inches	
2. Maximum single door	48 inches	

ITEM	NFPA 101	UBC
b. Floor level on both sides of doorway	Substantially level and have the same elevation on both sides of the doorway, for a distance at equal to the width of the widest leaf.	
c. Swing		
1. In direction of travel	- in an exit enclosure - serving hazardous rooms or areas - rooms with an occupancy load of 50 or more shall leave unobstructed at least one-half its required width	
2. Into an aisle, passageway		with occupant load of 50 or more shall not reduce the landing dimension to less than one-half its required width (44" min.)
3. When fully open maximum projection into means of egress	7 inches	
Stairs		
a. Dimensions		
1. Minimum width	44 inches	
2. Maximum riser height	7 inches	
3. Minimum riser height	4 inches	
4. Minimum trend depth	11 inches	
5. Minimum head room	6 feet 8 inches	

ITEM	NFPA 101	UBC
6. Maximum distance between landing	12 feet 0 inches vertically	
Exit Passageways		
a. Width		44 inches (min)
Occupant Load		
a. Minimum exit access	36 inches	
Number of Means of Egress		
a. Minimum number required		2 exits/50 persons 2 exits/30 persons in mechanical equipment rooms
b. Occupant load of 500 to 100	3 exits minimum	
c. Occupant load of 1001 or more	4 exits minimum	
Arrangement of Means of Egress		
a. Two or more exits		
1. No sprinkler protection installed	shall be placed a distance apart equal to no less than one-half the length of the maximum overall diagonal dimension of the building or area to be served, measured in a straight line between exits.	

ITEM	NFPA 101	UBC
2. Protected throughout with an approved automatic sprinkler system		Where three or more exits are required, they shall be spaced as described above, the additional exits shall be arranged reasonable distance apart so that if one becomes blocked the others will be available.
b. Dead ends		
1. High hazard occupancies	not permitted	
2. Other industrial occupancies		20 feet
Measurement of Travel Distance to Exits		
a. Method	distance to exits shall be measured from the most remote point subject to occupancy	
b. Distance		
1. High hazard industrial occupancy	75 feet	
2. Low and ordinary hazard industrial occupancy fully sprinklered building	150 feet	

9.3.6.8 Maintenance

a) Equipment, structures, and piping will be arranged to permit maintenance and service by means of permanent or mobile equipment. Permanent facilities as indicated on the contract

piping drawings will be provided where maintenance by mobile equipment is impractical.

b) The Fan House will have adequate space for manually operated monorails and hoists for removal and installation of heavy equipment. Permanently installed monorails and hoists are preferred over portable equipment (TDP-Section 5, Item 700).

All maintenance work in the Fan House will be performed in a direct hands-on mode. Provisions should be made in space layout for construction of plastic huts (greenhouses) around potentially contaminated equipment during repair work (TDP-Section 5, Item 700).

c) The incell process equipment, jumpers, and support shall be designed to allow remote installation and removal using the incell and/or canyon crane. The need for ready access to components requiring frequent replacement shall be considered during design and development of vitrification process equipment (FDC-3.1).

d) Remote Maintenance Considerations

A jumper is a unit of remotely removable piping, electrical conduit, or instrumentation. It is self-supporting and has a lifting bail at its center of gravity for accessibility by a crane hook. Jumpers will be designed utilizing the Jumper Design Guide, SD-RE-DGS-002, Rev. 2 as a guide. A jumper is shop-fabricated to very precise dimensions and tolerances according to Hanford Specification HW-BS-0084, Revision Basic, "Specification for Jumper Fabrication" (FDC-4.3.1) and (TDP, Section 15, Item 100). Small diameter piping (i.e., dip tube, instrument air supply etc.) within a jumper will be protected by dunnage or a pipe sleeve to prevent damage during handling and installation. The use of flexible jumpers requires client approval and will be identified on P&IDs.

A primary consideration for design of the cells is for remote installation, relocation, maintenance, repair, decontamination and removal of cell equipment, piping, and services with remotely operated devices (TDP-Section 5, Item 140). The remotely operated canyon crane will be used primarily for installation and removal (TDP-Sections 5 and 15, Item 200) (FDC-3.1 and 5.3.3). The hierarchy for remote repair and replacement shall be crane, master-slave manipulator and electrical mechanical manipulator (TDP-Section 15, Item 100).

Cell layouts will provide for the initial installation and later removal and replacement of equipment and jumpers. Piping may be located in replaceable horizontal stacks or vertical arrays. The piping will be modularized where practicable (FDC-5.3.3). Piping for which replacement is most

probable, should be located at the top of the stacks (TDP-Section 5, Item 200), (TDP-Section 15, Item 200) and (FDC-5.3.3). The stacking of process vessels and jumpers on top of jumpers will be kept to a minimum (TDP-Section 5, Item 140). Access clearance will be provided at all remote mechanical joints (i.e., connectors and remove flanges) for operation of the canyon impact wrench. Equipment and jumpers will be balanced to assume their installed position when suspended from the crane and staged for installation. Access clearance will be provided at all lifting bails for engagement of the crane hook or lifting yoke.

e) A method for identifying and numbering the following items will be provided.

1. Equipment and Their Nozzles

2. Floor Pads

3. Wall Nozzle Identification

An index drawing will be produced that indicates canyon cell zones and identification numbers of each nozzle and penetration stub in remote cells. Identification labels in the operating corridors shall be identical to the in-cell labels at the corresponding line in the cell. Cell to cell penetrations retain their unique cell nozzle number on each side of the wall.

Rows and columns of in-cell nozzle stubs shall be divided into zones defined by their process function. Row A will be at the top of each row as an alpha designator.

Nozzle stubs shall carry a numeric identifier starting with 1 (one) at the left side of each zone's row (as viewed from in-cell).

i.g., A1 A2 A3 A4 (Top Row A)
B1 B2 B3 B4 (Row B)

Wall nozzle identification shall be as follows:
P12 A14 E

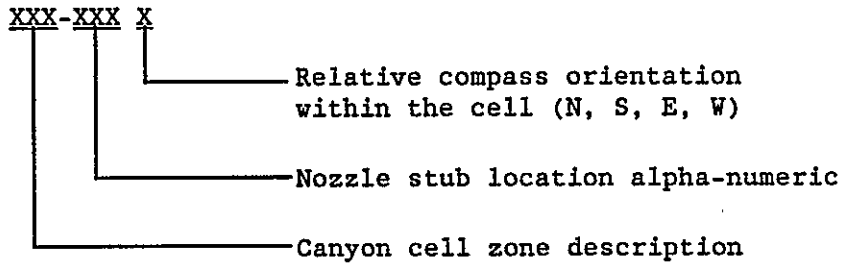

Canyon Zone Description Legend

P (1 thru 12) = CPC zones (from 1 North to South)

CD1 = FCDC North	SB1 = SBS East
CD2 = FCDC South	SB2 = SBS West
CM1 = CDMC North	RD1 = REDC North
CM2 = CDMC South	RD2 = REDC South
RRW = R/R Well	CLT = Can.L/O Tunnel
MC1 = MC North	MCT = MC Tunnel
MC2 = MC South	OG1 = Offgas East
	OG2 = Offgas West

4. Jumpers

9.3.6.9 Pumps

a) Non-Remote Operation Areas

1. Pumps will be located close to equipment from which they take suction.

2. Piping will be designed to provide clearance for pump or driver removal, and on end suction pumps, to permit removal of suction cover and pump impeller while the suction and discharge valves are in-place.

3. Suction lines will be arranged in such a manner as to minimize offsets. They will be short and as direct as possible and step down from the equipment to the pump.

4. Valve handwheels or handles will be oriented, whenever practical, to be contained within the perimeter of the pump foundation. They will be readily operable from finished surface.

b) Remote Operation Areas

1. Vertical, submerged, cantilevered centrifugal pumps will be installed and removed by remote crane and impact wrench (TDP-Section 10, Item 150).

2. Instrumentation, power, and piping will be routed to PUREX connectors attached to, and supported from, the pump.

9.3.6.10 Heat Exchangers

a) Non-Remote Operation Areas

1. Heat exchangers will be grouped together, wherever possible.

2. The channel end and shell covers will be kept clear of piping, structural members, etc., for unbolting exchanger flanges and removal of heads and tube bundles.

b) Remote Operation Areas

1. Instrumentation and piping will be routed to PUREX connectors.

9.3.6.11 Vessels and Tanks

a) Non-Remote Operation Areas

Level instruments will be oriented on the side toward the operating aisle, when possible.

b) Remote Operation Areas

1. Vessels will be remotely removable.

2. Where practical, internal piping (i.e., jet lines, weight factor lines, etc.) will be remotely installed via a jumper.

3. Instrumentation and piping will be routed to PUREX connectors or remote flanges.

9.3.6.12 Compressors

a) Compressors

1. Top suction and discharge lines will be routed to provide clearance for overhead maintenance requirements or be made up with removable spool pieces.

2. Lube and seal oil consoles will be located adjacent to, and a minimum distance from, the compressor. The equipment arrangement will be reviewed for access and operation.

3. Reservoir, compressor bearing, and seal oil vents will be piped to a safe location.

4. Piping will be supported so as to keep dead loads on compressor nozzles to a minimum.

5. Suction lines will be internally cleaned in accordance with the applicable contract specifications (see Section 9.4). The extent of cleaning will be indicated in the contract specifications and P&IDs.

9.3.6.13 Valve Operation

a) Non-Remote Operating Areas

1. Operating valves requiring attention, observation, or adjustment during normal plant operation will be located so as to be within reach from finished surface, platform, or portable ladder.

2. The use of chain operators will be avoided, wherever possible. Consideration for the use of chain operators will be given when the bottom of handwheel is over 7'-0" above finished surface or platform.

3. The centerline of handwheel or handles on block valves used for shutdown only, located less than 15'0" above the highpoint of finish surface, and those located in pipeways may be accessible by portable ladder.

4. The centerline of handwheel or handles on block valves used for shutdown only, located over 15'-0 above high point of finish surface, will be operable from permanent ladder or platform.

5. In general, valve handwheels, handles, and stems will be kept out of operating aisles. Where this is not practical, the valve will be elevated to 6'-8" (±3 inches) clear from high point of finish surface to bottom of handwheel for personnel access and TBD minimum for manipulator cart access.

b) Remote Operation Areas

1. Valve handles shall be sized properly and located for ease of remote operation (FDC-5.3.2).

2. Manually operated valves will not be used, except in the Analytical Cells (Room 176A through H). See Control Systems Engineering (Section 7.0) for the design of valves.

9.3.6.14 In-Line Instruments

a) Non-Remote Areas

1. Liquid level controllers and level glasses will be located so as to be accessible from finished surface, platform or permanent ladder. The level glass will be readable from finished surface, wherever practical.

2. Relief valves will be accessible. Wherever feasible, they should be located at platforms which are functional for other purposes. Relief valves with a centerline elevation over 15 feet above high point of finish surface (except in pipeways) will be accessible from platform or permanent ladder.

   One-inch and smaller thermal relief valves may be installed in a horizontal position when it is impractical to install in the vertical. Relief valves 1-1/2 inches and larger will be installed in a vertical position.

   Relief valves discharging to a closed system will normally be installed higher than the collection header. There will be no pockets in the discharge line.

3. Steam traps will be provided at pocketed low points and at dead ends of steam headers. Traps will also be provided on excessively long runs of steam piping, for sufficient condensate removal, and to ensure dry quality steam at destination. Steam traps located more than 15 feet above high point of finish surface, except in pipeways, will be accessible from platform.

4. Size of control, block and bypass valves will be indicated on the P&IDs. Control valves will be accessible from finished surface or platforms. In general, they will be located in sight of instruments or indicators displaying the variables they control.

5. Orifice runs should preferably be located in the horizontal position. Vertical orifice runs may be used with the approval of Control Systems Engineering. Orifice flanges with a centerline elevation over 15 feet above the high point of finish surface, except in pipeways, will be accessible from a platform or permanent ladder.

   <u>Orifice Taps Shall be Located as follows</u>:

   - Air and Gas - Top vertical centerline (preferred) - 45° above horizontal centerline (alternate)

   - Liquid and Steam - Horizontal centerline (preferred) - 45° below horizontal centerline (alternate)

   - The appropriate piping drawings will show the required tap orientations.

6. Temperature and Pressure Instrument Accessibility and Visibility

- Temperature test wells located less than 15 feet above high point finish surface will be accessible from finished surface or a portable ladder. Those temperature test wells located in a pipeway will be considered accessible by a portable ladder. Those temperature test wells located over 15 feet above high point of finish surface will be accessible from a platform or permanent ladder.

- Temperature indicators will be visible from finished surface, ladder, or platform.

- Thermocouple and temperature indicators located less than 15 feet above high point of finished surface will be accessible from finished surface or a portable ladder. Those thermocouple and temperature indicators located in a pipeway will be considered accessible by portable ladder. Those thermocouple and temperature indicators over 15 feet above high point of finished surface will be accessible from a platform or permanent ladder.

- Local pressure indicators will be visible from finished surface, permanent ladder, or platform. Those local pressure indicators located less than 15 feet above high point of finished surface will be accessible from finished surface or a portable ladder. Those local pressure indicators located in a pipeway will be considered accessible by portable ladder. Those local pressure indicators over 15 feet above high point of finished surface will be accessible from a platform or permanent ladder.

b) Remote Operation Areas

1. To the maximum extent possible, instrumentation will be installed in jumpers and at equipment to be remotely removable.

9.3.6.15 Vents and Drains

a) Non-Remote Operation Areas

1. The mechanical and utility system flow diagrams will indicate the vent, drain, and bleed requirements for plant operation, except those noted in "3" below.

2. Hydrostatic vents and drains will be provided at the high and low points of piping systems.

3. Valved bleeds will be provided at level switches, level controllers, and gauge glasses.

b) Remote Operation Areas

Vents and drains are not provided in remote operation areas. Equipment and jumpers will be designed for liquids to be evacuated prior to their removal from Hot Cells. Piping in remote operated areas will be designed to be self-draining and venting to the greatest extent possible.

9.3.6.16 Spectacle Blinds

a) Spectacle blinds will be provided as indicated on the flow diagrams.

b) Spectacle blinds will be accessible from finished surface or platform. Blinds located in a pipeway will be considered accessible. Blinds that weigh over 100 lbs will be accessible by mobile equipment. When this is not possible, davits or hitching points will be provided.

9.3.6.17 Sample Connections

a) Remote Operation Areas. Where practical, jumper-installed dip tubes will be used for sampling of in-cell process equipment.

9.3.6.18 Utility Stations

Utility stations will be indicated on the Utility Distribution Diagrams, where required.

9.3.6.19 Personnel Protection

a) Personnel protection will be provided at uninsulated lines and equipment operating above TBD. Uninsulated lines seven feet above or three feet away from an operating surface will be insulated (6430.1A-1555-2.6.8). Lines which are infrequently used, such as relief valve discharges, do not require insulation.

b) Valve and flange spray shields, if required, will be noted in the piping material specification.

9.3.6.20 Line Strainers

a) Temporary strainers will be provided in 3-inch and larger pump suction lines (except in remote operated areas) for use during start-up. Piping will be arranged to facilitate removal.

b) Permanent Y-type strainers will be used on 2-inch and smaller screwed or socket weld pump suction piping.

c) All line strainers will be indicated on the contract mechanical and utility flow diagrams.

9.3.6.21 Piping Flexibility

Piping systems, other than systems requiring a review by Stress Engineering (see Section 9.6), will be reviewed for adequate support and flexibility by the General Piping Supervisor.

9.3.6.22 Insulation

For hot and cold insulation requirements for piping and equipment, see the applicable contract specifications (see Section 9.5).

9.3.6.23 Insulation Shoes

a) Shoes will be provided for steam headers with design temperatures of 388°F and above crossing supports within a building.

b) All stainless steel lines and lines with wall thickness less than standard weight will be checked to determine the need for shoes or wear plates.

9.3.6.24 Piping Pressure Testing

For piping pressure testing methods, see the applicable contract specifications (Section 9.4).

9.3.6.25 Winterization

Winterization requirements - TBD

9.3.7 Drawings and Design Procedures

9.3.7.1 Space Allocation Drawings

Space allocation drawings will be prepared for the Vitrification Building, Frit Storage/Cold Chem Building and Mechanical/Electrical Services Building as a minimum. The space allocation drawings will control the space allocated to the various disciplines until the building design is complete. The design model will also be used as a space management tool. Space allocation updating will continue until the final issue of the CWBS packages.

9.3.7.2 Types of Piping Drawings

a) Above-ground piping plans and sections are drawings in sufficient detail to indicate pipe routing, in-line items, anchors, guides, supports, provisions for pipe expansion, placing of equipment, and connections to associated apparatus. Sections and details will be drawn, where necessary, to show routing of piping which cannot be clearly shown on the plan drawing. These drawings will contain sufficient detail to prepare Jumper Fabrication Drawings.

b) Jumper Fabrication Drawings depict a line, or part of a line, with sufficient information for fabrication and installation. Jumper Fabrication Drawings will be produced for all piping, electrical and instrumentation jumpers.

c) Isometrics are three-dimensional drawings of a pipeline, or part of a pipeline, complete with all information required for fabrication and insulation.

d) All in-cell equipment and piping must be dimensioned relative to fixed reference points (TDP-Section 5, Item 200).

e) Piping dimensions will be shown in feet and inches. Inches only will be used when the dimensions are less than 1 foot.

f) Above-ground piping drawing scales will generally be as follows:

1. Plan drawings, for nonremote operation areas - 1/2"=1'-0" and 1/4"=1'0".

2. Plan drawings for remote operation areas - 1"=1'-0".

3. Sections - Various scales.

4. Details - Various scales and no scale.

5. Jumper Fabrication Drawings - various scales.

g) Underground piping drawing scales will be as follows:

1. Plan drawing - various scales.

2. Sections - Various scales.

3. Details - Various scales and no scales.

h) Computer Aided Design (CAD) will be utilized for Jumper Fabrication Drawings, isometrics, detail drawings and plan and section design drawings.

9.3.7.3 Equipment Sizes

Layouts and finished drawings will utilize final Fluor Daniel estimated equipment sizes and government equipment outlines, as required.

9.3.7.4 Miscellaneous Pipe Support Details

Fabrication and installation details for repetitive items (e.g., base supports, field supports, cradles, etc.) will be shown on piping drawings as typical details.

9.3.7.5 Line Identification

Pipe lines will be clearly identified by line number on P&IDs and drawings, and will be summarized on the "Pipe Line List."

9.3.7.6 Hydrostatic Vents and Drains

Hydrostatic vents and drains will not be shown on piping systems. Vent and drain requirements will be identified on a detail (standard) drawing.

9.3.7.7 Piping Symbols and Abbreviations

Piping symbols and abbreviations will be in accordance with the Piping Material Specification (see Section 9.4).

9.4 PIPING MATERIAL ENGINEERING

9.4.1 Piping Material Specifications

Specification work will consist of four documents per WBS as described in the paragraphs below.

a) An alloy piping material specification to cover the material, fabrication, installation, and pressure testing requirements for stainless steel, alloy 20, HASTELLOY, etc. piping and components.

b) A piping material specification to cover the material, fabrication, installation, and pressure testing requirements for carbon steel, iron, and nonmetallic piping.

c) A piping material specification to cover the material, fabrication, installation, and pressure testing requirements for double contained piping.

The three specifications listed above will be in the CSI (Construction Specifications Institute) format. The material requirements for the specifications will include,

but are not limited to, metallurgy, method of manufacture, construction, and acceptance criteria. The fabrication, installation, and testing requirements shall include the methods and acceptance criteria commensurate with current industry practice and Fluor Daniel's engineering experience and expertise. Coating requirements for underground piping, and any cleaning requirements for piping shall be included in this specification, where applicable. This information shall be in sufficient detail to facilitate design and procurement. The specification shall be in accordance with the applicable codes and standards listed in Section 9.2.

The basis for material selection in these specifications will be based on the criteria and information in the following documents, as well as on past Fluor Daniel experience:

1. Technical Specification for Project Product and Service Index for the Defense Waste Processing Facility DA S100 and New Waste Transfer Facility DA Y518 - Revision 10.

2. Technical Basis for Hanford Waste Vitrification Plant Process Equipment Materials Selection - September 1989.

3. Draft Final Report - Cold Chemical Design Concept, Safe Handling of Formic Acid.

In order to support the automatic bill of material generation capabilities of the Plant Design System (PDS), one other document will be generated, as described below.

d) Piping line classes in the Fluor Daniel standard format. These line classes will consist of a series of item codes matched to a series of short item descriptions for each individual component which will appear on the bills of material. These line classes will be for internal issue only to support the 3D Plant Design System (PDS) bill of material generation.

9.4.2 Specialty Item Lists

In order to support the automatic bill of material generation capabilities of PDS, a specialty item list will be required. Items on this list will consist of those items for which it would not be feasible to create a PDS symbol for the automatic takeoff function. These items will be identified by a code number on the P&ID, and the code number will correspond to a short description to appear on the piping bill of material and a complete purchase description to be issued for procurement use. The descriptions will be accompanied by a design sketch, where required.

9.4.3 Coatings Specifications

The Coatings specifications will state the external coating materials and requirements for surface preparation and application procedures for piping, equipment and steel structures, except building and pipeway enclosure roofing, siding, and interior wall painting. The materials shall be selected based on operating temperatures, decontaminability, and economics. These specifications will state the labelling requirements for all piping and valves.

9.4.4 Thermal Insulation Specifications

The thermal insulation specifications will state material, fabrication, and application requirements for external thermal insulation for process and utility piping and equipment. Plumbing, buildings, and roofs are not included. The specification will be based on Corps of Engineers Guide Specification CEGS-15250 and DOE Order 6430.1A, with the following exception:

> DOE Order 6430.1A states that thermal insulation thickness is to be based on the standard TIMA (Thermal Insulation Manufacturer's Institute) program. The TIMA economic thickness program is based on the thickness which provides the least cost over the life of the plant, resulting in thicknesses which are very unwieldy in terms of spacing and routing, and which often have to be reduced by hand to more reasonable levels. The basis will instead be a Fluor Daniel developed program which will be based on the thickness which provides a minimum, to be determined rate of return. This results in less thickness and is more consistent with the usual means of evaluating capital equipment investments.

9.4.5 Cathodic Protection Specifications

The Cathodic Protection specifications shall state the protection design requirements, materials, installation, commissioning, and checkout for sacrificial anode and impressed current systems applied to designated underground structures, as required. The specifications will be based on Corps of Engineers Guide Specification CEGS-16640 or CEGS-16642.

9.4.6 Pipe Line Lists

The Piping Material Engineer is responsible for the preparation, maintenance, and issue of the Pipe Line List, and shall provide a uniform method of identifying and establishing the necessary information for the individual pipe lines.

The format for the line numbers shall be as follows:

SPL-1/2"-11A-050-K-IH

PE

- IH — Heat tracing or insulation symbol. See Insulation specification attached to each design package for explanation of symbols.
- K — Material class. See applicable Material specification.

  Note: For a line that process requires tubing insted of pipe, a "T" will be added to the spec.
  Example: "AB" spec will be shown as "ABT".
- 050 — Line sequence number.
- 11A — System number.
- 1/2" — Nominal pipe size, in inches.
- SPL — Service designation.
- PE — Embedded Piping (Use for Lines Embedded in Concrete) Replaces Line Service.

The line list shall be a consolidated listing showing, in numerical order, all process and utility pipelines within the Fluor Piping Engineering scope. The line list shall contain the following information:

a) Line Number.

b) Flow diagram where line originates.

c) Design and operating parameters (temperature, pressure).

d) Starting and terminating points of the line.

e) Phase of fluid (vapor or liquid).

f) Stress check and postweld heat treatment requirements.

g) Safety classification.

h) Columns to indicate whether the material is toxic or corrosive.

i) Clarifying remarks, as required.

9.4.7 Valve Lists

A list of manual valves for each WBS shall be issued at RFC only for each WBS. The valve list will contain the following information:

a) Valve type code.

b) System number.

c) Valve number.

d) Type of valve, rating.

e) Flow diagram on which valve appears, with coordinates.

f) Line number on which valve appears.

g) Material of construction of valve.

h) Clarifying remarks, as required.

9.5 PIPING STRESS ENGINEERING

9.5.1 Scope

a) This document contains the engineering analysis requirements for piping systems for stresses, reactions, and displacements due to thermal, pressure, wind, gravity, settlement, friction, soil, and seismic loads.

b) This document also assembles and presents the technical philosophy upon which all pipe stress analysis for HWVP is based. It lists the applicable codes, specifications, constants, physical properties, design conditions, and the general approach used in analysis.

9.5.2 Applicable Codes and Standards

Applicable codes and standards listed below will be used as referenced herein.

a) Department of Energy (DOE) Orders

- DOE Order 6430.1A Draft 04-06-89 — General Design Criteria for Department of Energy Facilities

b) HWVP Design Criteria

- SD-HWV-FDC-001 — Functional Design Criteria
- SD-HWV-DP-001 — Technical Data Package

c) Westinghouse Hanford Company

- SD-RE-DGS-002 Revision 2 — Jumper Design Guide

d) Hanford Plant Standards

- SDC-4.1 — Design Loads for Structures

e) Fluor Daniel Documents

- HWVP Project Management/Control Manual
- HWVP Quality Assurance Manual

f) American National Standards Institute (ANSI/ASME)

- B31.1 - 1983 — Power Piping
- B31.3 - 1987 — Chemical Plant and Petroleum Refinery Piping
- A58.1 - 1982 — Building Code Requirements for Minimum Design Loads in Buildings and Other Structures

g) American Society of Mechanical Engineers (ASME)

- Section VIII, Division 1, 1989 — Pressure Vessels
- Section III Subsection NC, 1989 — Division 1, Class 2 Components

h) U.S. Nuclear Regulatory Commission

3.9.2 Dynamic Testing and Analysis of Systems, Components and Equipment

i) Uniform Building Code (UBC) - 1988 Edition

j) UCRL-15910 (1987) Design and Evaluation Guidelines for Department of Energy Facilities Subjected to Natural Phenomena Hazards

9.5.3 Specifications

a) Scope

The specifications listed below are written to ensure that the engineered product is designed/fabricated according to the latest applicable codes and established engineering practices. These specifications will be encompassed and issued within a master specification for each WBS, where applicable.

1. Piping Support Elements

This specification describes the general requirements for supplying the fabricated elements for support and control of piping systems and components. Together with the specification drawing sheet, it comprises the specification for design, material selection, fabrication, inspection and packaging for pipe shoes, guides, variable spring hangers, miscellaneous supports, or special elements as identified by the specification drawing sheets.

2. Metallic Expansion Joints

This specification describes the general requirements for supplying expansion joints of single or double bellows with multiple corrugations to absorb thermal expansion, contraction and other imposed displacements of piping systems. The requirements described herein are supplementary to the specification drawing sheet. Together, they comprise the specification for design, material selection, inspections and packaging of the expansion joint and its accessories or special elements as identified by the specification drawing sheet.

9.5.4 Piping Flexibility Analysis Procedure

Piping flexibility analysis for all the piping systems on the HWVP contract will be in accordance with this section. This section will contain criteria assembled from contract documents and applicable codes and standards listed in Subsection 9.9.2.

a) Design Conditions

1. General

Design conditions will be in accordance with the applicable Code and supplementary information contained herein.

2. Pressure

Design pressures, as specified in Fluor Daniel's Pipe Line List, will be used for design calculations. The operating pressure will not be used in the analysis.

3. Temperature

a. The design temperature, T_D, used in the analysis will be as specified on Fluor Daniel's Pipe Line List. This list will define variations from normal design conditions, when applicable.

b. The following temperatures will be used for temperature difference calculations during piping installation/erection.

Winter installation, $T_w = 40°F$

Summer installation, $T_s = 80°F$

c. The temperature difference (ΔT_{Rx}) for reaction range calculations will be determined as follows:

1. If $T_D > T_s$: $\Delta T_{Rx} = T_D - T_w$

2. If $T_D < T_w$: $\Delta T_{Rx} = T_D - T_s$

3. If $T_w \leq T_D \leq T_s$: $\Delta T_{Rx} = T_s - T_w$

4. Where a piping system has two or more design temperatures specified, each design temperature will be examined by 1, 2, or 3 above, and the greatest difference will be used for reaction range calculations.

5. In some cases, both positive and negative temperature differences will result from a through d above. The difference with the larger absolute value is the reaction range temperature difference (but it retains its original sign for calculations). The discarded temperature difference will not be ignored when determining reactions on critical equipment. The reversed

loading will be determined by multiplying the reaction range temperature difference by the ratio of the discarded temperature difference to the reaction range temperature difference.

d. The temperature difference used for stress range calculations, (T_{st}) will be determined as follows:

1. If $T_D > T_s$: $\Delta T_{st} = T_D - T_w$

2. If $T_D < T_w$: $\Delta T_{st} = T_D - T_s$

3. If $T_w \leq T_D \leq T_s$: $\Delta T_{st} = T_s - T_w$

4. Where a piping system has two or more design temperatures specified, each design temperature will be examined by 1, 2, or 3 above. In addition, the differences between design temperatures will be determined. The greatest difference will be used for stress range calculations.

e. In many cases, the stress temperature range will be greater than the reaction temperature range. This allows the conservative use of reactions from stress range calculations in lieu of additional calculations. The detailed reaction range calculations will be provided for meeting force and moment limitations in critical cases only.

f. In all cases, temperatures used for determining equipment anchor displacements will be based on the equipment temperature consistent and coincident with the design temperature which the analyst has determined to be the most severe for the piping system and attached equipment.

4. <u>Live and Dead Loads</u>

a. For sheltered piping, no snow or ice loads will exist. No live loads other than commodity, test media, or cleaning fluid will be considered. Cleaning fluids, where their use is specified, will have a specific gravity less than, or equal, to 1.1. This load will be analyzed as a test load in accordance with the applicable Code. Pipes transporting liquid will be assumed full unless designed for gravity flow, in which case the actual flow rate may be used to determine live load.

b. For outdoor piping, snow and ice loads will be considered, as well as other loads specified in a. above.

c. Weight of pipe, valves, flanges, strainers, insulation, and other significant piping components will be considered in the analysis. Valve weights for commercially available designs will be estimated using catalog valve weights for comparable items. Mass moments of inertia of valves and/or center of gravities will be considered in analyses, where significant.

5. Vibration Due to Pulsating Flow

Systems which have internal flow conditions which are subject to fluctuate, i.e., due to changes in flow rate, hydraulic shock or liquid slugging, shall be designed and restrained for impact forces and vibration.

6. Wind Loading

a. Piping systems which are not sheltered from direct wind pressures will be analyzed for wind loadings in accordance with the requirements of A58.1, Section 6, using the following criteria: Basic wind speed: 70 mph; Importance factors 1.07 and Exposure Category is "C".

b. Relative structural displacements imposed on piping systems due to wind will be considered, where applicable.

7. Seismic Loading

a. Safety Class 1, 2 Piping

For definitions of Safety Class items, see Section 2.5.

- Dynamic seismic analysis at all Safety Class 1, 2 piping systems will employ response spectrum charts furnished by the Structural Group. In the absence of OBE response spectrum charts, DBE values can be conservatively used for Safety Class 2 piping. Safety Class 1 is designed in accordance with DBE values.

b. Modal Response for Safety Class 1, 2 Piping

- Individual modal responses will be combined by the Ten Percent Method, modified to include the "residual mass" response. This method is in accordance with the N.R.C. Regulatory Guide 3.9.2. Consequently,

$$R = \left(\sum_{k=1}^{N} Rk^2 + 2 \sum | Ri\ Rj | + RM^2 \right)^{1/2} \qquad i \neq j$$

where $\frac{wj - wi}{wi} \leq 0.1$ and $1 \leq i \leq j \leq N$

R is the representative maximum value of a particular response of a given element to a given component of an earthquake.

Rk is the peak value of the response of the element due to the kth mode.

N is the number of modes below the cut-off frequency of the floor response spectra.

RM is the residual mass response of a given element to a given component of an earthquake.

wi is the frequency of the ith mode.

wj is the frequency of the jth mode.

c. Safety Class 3, 4 Piping

- These systems employ the UBC static analysis approach. A lateral seismic force will be applied to the piping system according to the Uniform Building Code. The seismic force is equal to the product of a seismic factor, f, and the piping system weight. The seismic factor is determined as follows:

$$f = V/W = Z\ I\ Cp$$

where:

f = Seismic Factor

V = Lateral seismic force on restraint

W = Piping system weight

Z = 0.20 for Zone 2B

I = 1.25 (UBC Table 23-L)

Cp = 0.75 (UBC Table 23-P)

The following value will, therefore, be used for the Safety Class 3, 4 piping systems: f = 0.19.

The loading will be applied in each of the three principal directions separately. The maximum resulting stress at a point due to any of the earthquake directions will be used for design.

8. Settlement

Relative foundation settlement, as provided by the Structural Group, will be considered, where applicable.

9. Seismic Anchor Movements

a. Safety Class 1, 2 Piping

- Anchor movements for the various buildings, respective major floor elevations or primary structures will be provided by the Structural Group.
- Anchor displacements for secondary structural elements, such as pipe supports, will be determined by the Stress Engineer.
- Seismic Anchor Movements will be applied in each of the three orthogonal directions separately. The results of these loadings will be combined by the "Square Root Sum of Squares" method, (SRSS).

b. Safety Class 3, 4 Piping

- The effects of Seismic Anchor Movements only need to be considered on critical pieces of equipment or in areas of minimum piping flexibility.

10. Friction Effects

a. Support friction will be considered but not included in flexibility analysis.

b. Friction loads will be considered in the design of restraints.

c. Friction may be considered in UBC seismic calculations to reduce the axial pipe force acting on restraints, structures, and equipment.

d. The following coefficients of friction will be used:

Contact	Coefficient of Friction
Steel to Steel	0.3
Steel to Concrete	0.4

11. Loadings not Considered or Permitted

a. Construction loads will not be considered in the analyses

b. Electrical conduit or instrumentation will not be supported from piping.

c. Other than for "Jumper" piping, fabrication tolerances will not be considered in the flexibility calculations.

b) Properties for Analysis

1. General

All chilled, hot water, condensate return and steam distribution piping systems shall use physical properties which comply with B31.1. All Category I systems will be designed to ASME, Section III, Subsection NC. The remaining systems will use properties of the B31.3 code.

2. Modulus of Elasticity (E)

Weight and seismic calculations will be based on the modulus of elasticity (E) at 70°F. Where significant differences in the modulus of elasticity between 70°F and the design temperature exist, maximum deflections may be ratioed as follows: actual deflection equals calculated deflection times the modulus at 70°F, divided by the modulus at the design temperature.

3. Coefficient of Thermal Expansion

The coefficient of thermal expansion will be based on the appropriate piping code.

4. Wall Thickness

The nominal wall thickness will normally be used for thermal, weight, seismic, and anchor movement calculations, unless engineering judgment indicates that a "worst case" exists using the thinner wall, which considers corrosion and mill tolerances.

5. Thermal Cycles

As a minimum, for accessible piping, 7000 thermal cycles is used and for nonremovable (encased) piping, 14,000 thermal cycles is used. These values are based on an average of 1 cycle per day for the piping design life of 20 and 40 years, respectively. Operating conditions will be investigated to determine actual cycles.

6. Damping

Five (5) percent damping will be used for all piping systems designed to DBF and OBE conditions. This is in agreement with UCRL 15910.

c) Load Combinations and Allowable Stresses for Piping Systems and Components

1. General

Load combinations and allowable stresses for the various analysis are to be in accordance with the appropriate code used, i.e., B31.1, B31.3 or ASME Section IV, Subsection NC.

2. Pipe and Fittings

Load combinations will be in accordance with the applicable code used in the analysis.

3. Flanges

Flange moment limitations are intended to ensure mechanical integrity. Leakage requirements may be assumed to be satisfied by these same limitations when standard flanges are used.

a. Flange stresses will be computed in accordance with ASME Section VIII Division 1 rules, and/or Taylor-Forge Bulletin 502, "Modern Flange Design."

b. Response combination for meeting flange moment limitations will include dead plus live load, thermal load, seismic load, and anchor movement load (greater of wind or seismic). Moments due to differential foundation settlement will not be considered.

c. Flange moment limitations will not be considered for buried piping systems.

4. Structural Restraints

a. Response combinations for piping restraint design will include all concurrently acting loads, including maximum effect of occasional loads.

b. Piping loads will be submitted to the Structural Group for those supports under their scope of work and design.

5. Anchors, Guides, Supports, and Hanger Springs

a. Response combinations for miscellaneous support design will include all concurrently acting loads, including the maximum effect of occasional loads.

b. Each miscellaneous support will be reviewed by the Analyst to ensure that it will perform its intended function.

6. Jumpers

a. As an aide in the design of these in-cell systems, the Jumper Design Guide will be employed.

b. Jumpers should have adequate flexibility to allow for connector makeup, respective kickoff, and effects of thermal expansion, yet rigid enough to maintain dimensions and tolerances while being handled by the remote crane.

c. Dunnage will be designed to protect and support the jumpers during the various handling activities. Diagonal-type bracing is preferred and should be used, whenever possible. Four-inch channel is the preferred structural shape for dunnage.

d. Will be designed in accordance with B31.3 code.

7. Embedded and Remote Lines, Rack Piping

- Shall be designed in accordance with B31.3.

d) Load Combinations and Allowable Loads on Equipment

1. General

Force and moment summaries will list actions on the nozzles separately for each load case, rather than a combined loading.

2. Mechanical Equipment Nozzles

A force and moment summary for mechanical equipment nozzles will be transmitted to the appropriate Fluor Daniel engineering discipline only if allowable loads have been exceeded or not known.

3. Vessel Nozzles

Those nozzles for which a force and moment summary is required will be identified by the Vessels Group in a joint review with Pipe Stress Engineering.

4. Pump Nozzles

a. Loads on pump nozzles will be maintained below vendor allowables. On pumps where no allowables are available, loads will be transmitted to the appropriate engineering discipline for approval.

b. Loads calculated for ANSI specified pumps will be based on operating temperatures. However, if the operating temperature is less than 150°F, the temperature used in the calculation of the thermal stresses in the pipe will be 150°F or greater.

9.5.5 Extent of Analysis

a) Systems to be Analyzed

The systems listed below are to be analyzed by the Stress Engineer using the various conditions stated in the line list for design.

1. All Safety Class 1 and 2 piping systems regardless of size, material or temperature.

2. All lines whose failure could impact a Safety Class 1 or 2 item or component.

3. All lines embedded in the canyon walls which have design temperatures greater than 150°F, regardless of size.

4. All buried piping which is: metallic with design temperatures greater than 150°F and/or is subjected to external loadings from traffic or railroads; plastic with no limitations on temperature.

5. All jumper piping, complete with attached dunnage

6. All lines to/from pumps, compressors and blowers.

7. All nonembedded lines with a design temperature greater than 250°F and whose pipe size is 2" or greater.

8. All lines with design temperatures less than 20°F.

9. Any other lines as determined by the Lead Stress Engineer.

b) Safety Classification of Piping Systems

All piping systems are classified according to the consequences of their failure with respect to the environment, safety or the health of individuals. These classifications are:

Safety Class 1

Safety Class 2

Safety Class 3, 4

The definitions and design requirements of these classifications appear in Section 2.5.

c) Documentation Requirements

1. Safety Class 1, 2 Piping

- All the analysis performed on these piping systems will satisfy the requirements of the ASME Boiler and Pressure Vessel Code, Section III, Class II code. These systems will be analyzed using a verified pipe stress finite element program. The analysis will have formal documentation, enabling a qualified third party to review the results. As a minimum, the analysis will document all design parameters, computer input and output, plus summations of worst case primary and secondary stresses. Documentation will be consistent with the requirements of Subsection 9.5.2.e.

2. Safety Class 3, 4 Piping

- These systems will be analyzed according to the applicable piping code. Simplified methods of analysis, such as guided cantilever approximation, and the use of span charts, will generally be used on simple piping systems. On complicated systems, or at the discretion of the engineer, a computer may be used in the analysis. Documentation will only consist of listing the highest approximated (or computed) stresses in the piping system due to thermal, dead weight and static seismic effects.

3. Quality Assurance requirements are contained in Section 2.5.3.

d) References

- Marks' Standard Handbook for Mechanical Engineers, Eighth Ed., McGraw-Hill, New York.
- Taylor Forge Bulletin 502, Modern Flange Design.

9.6 PHYSICAL (PLASTIC) MODEL

9.6.1 Scope

This procedure covers the function, extent of presentation, review, approval, and disposition of models.

9.6.2 Detail Design Model

9.6.2.1 The Design Model is a model of the Vitrification Building and the cold chem portion of the Frit Storage/Cold Chem Building.

9.6.2.2 Model Function

The design model is a three-dimensional tool used by all engineering and design disciplines to develop an economical plant which is easy to operate and maintain. The design model integrates and aids in confirming the design of the various disciplines. It allows for a comprehensive review by all concerned departments of design components and equipment to ensure that the necessary requirements have been met. After client approval, the model is used for reference through the completion of the CWBS packages.

9.6.2.3 Presentation

a) Model Scale

Scale will be 1/2" = 1'-0." A scale of 1" = 1'-0" will be used for specific congested areas, e.g.; remote operation areas. Due to the limitations of commercially available stock, exact scale is not always possible. Every attempt is made to hold variances to a minimum.

b) Model Boards

The model boards are fabricated from 3/4-inch thick plywood and plastic. All vessels, equipment, and structures are securely attached to the boards.

c) Equipment and Vessels

1. Equipment and vessels may be fabricated from wood or plastic. Cylindrical equipment is modeled from plastic tube to the nearest commercially available size. Pumps, compressors, double pipe exchangers, etc., are modeled in block form representing outside extremities. Additional detail may be added to equipment and vessels located in complex and congested areas.

2. Access openings, manholes, platforms and ladders are indicated in simplified form. Ladder cages are not shown.

3. Equipment and vessels are color-coded as follows:

DISCIPLINE/ITEM	COLOR
ARCH	MOORLAND (Medium Brown)
HVAC	BLUE
MECHANICAL	BUFF (Light Brown)
REMOTE	BEIGE
PROTOTYPE EQUIP	TUSCAN (Yellow)
ELECTRICAL	ELEC. GREEN
VESSELS	VESSEL GRAY
CONTROL SYSTEMS	INSTR. PINK

DISCIPLINE/ITEM	COLOR
BUILDING STEEL	STEEL GRAY
CONCRETE	LIGHT GRAY AND WHITE
FIRE PROTECTION	RED
REMOTE ASSEMBLY EQUIP	VESSEL GRAY
BUILDING WALLS AND CEILINGS - NON-CONCRETE	IVORY
GFE	APPLE GREEN
OPERATING CONTRACTOR AND CLIENT SUPPLIED ITEM	BLACK

d) Building Colors

Buildings are colored dark gray for steel and light gray for concrete and siding. Other colors may be used, as required.

e) Structures and Pipe Supports

1. Structures will be fabricated from plastic. Floors, platforms, columns, beams, and bracing are indicated.

   The above items will be shown in cut-away form as required for clarity.

2. Pipe supports are fabricated from plastic structural shapes. Columns, beams, and bracing are indicated.

3. Structures and pipe supports are colored light gray for concrete and dark gray for steel.

4. Supports required for model purposes only are fabricated from clear plastic or plastic painted white.

f) Duplicate Equipment and Piping

Duplicate equipment and piping will not be modeled, except for interlocking piping systems, nontypical arrangements, or in complex and congested areas.

g) Pipe

1. Pipe, except jumpers, will be represented by 1/16-inch diameter plastic coated wire in various colors to indicate pipe material and service. Pipe may be represented by 3/32-inch diameter plastic-coated wire or full diameter scale in some areas.

2. White pipe sleeves are used to indicate outside diameter of piping insulation for insulated hot piping.

3. The following piping items are not shown on the model:

   - Hydrostatic vents and drains
   - Instrument sensing lines
   - Pump casing vents and drains
   - Thermal relief valves
   - Level gauges, controllers, and instrument bridles.

4. Break-out flanges will only be shown in complex and congested areas.

5. One-half inch and smaller piping jumpers will be represented by 1/32-inch diameter plastic-coated wire.

6. Three-quarter inch piping jumpers will be represented by 1/16-inch diameter plastic-coated wire.

7. One-inch and larger piping jumpers will be represented by full diameter scale plastic pipe.

8. The model piping color code is as follows:

Brown	-	Nonradioactive Process Alloy Pipe (SS, Monel, etc.) Systems
Orange	-	Radioactive Process Alloy Pipe (SS, Monel, etc.) Systems
Blue	-	Nonradioactive Utility Systems (excluding Steam and Condensate)
Green	-	Steam and Condensate (excluding Primary Loop Utility System)
Yellow	-	Primary Loop Utility Systems
Violet	-	General spares

Red	-	Fire Protection Systems
Gray	-	Remote Assembly and Flexible Hoses
Black	-	Miscellaneous Pipe Supports
White	-	Ghost Supports
Clear	-	Ghost Supports

h) Valves

1. Valves indicated on the mechanical or utility flow diagrams will be installed on the model, except those at pressure connections, steam-outs, level controllers, and level gauges.

2. Commercially available components are installed. Block forms to scale are used when commercial components cannot be adapted.

3. Gear operators for valves, extension stems, and chain operators are indicated.

4. All valves are colored gray, except control system valves (see Subsections 9.6.2.3.k.3 and 12).

i) Fittings

1. Commercially available fittings are installed in line color for the following:

   - Reducers - Where the small end is three inches and larger.
   - Break-out flanges. (See Subsection 9.6.2.3.g.5).
   - Weld caps - three inches and larger.
   - All blind flanges.

2. Elbows that are two inches and smaller and elbows in jumpers 3/4-inch and smaller are bent from colored wire as square corners. Bends and mitre elbows are installed to scale.

j) Electrical

1. Electrical equipment is installed on the model in block form representing the extreme outline of the equipment. Overhead cable trays or conduit racks are installed on pipeways and in structures. Trays and racks are fabricated from green plastic showing width, depth, and routing of major runs.

2. One-half inch and smaller electrical jumpers will be represented by 1/32-inch diameter plastic-coated wire.

3. Three-quarter inch electrical jumpers will be represented by 1/16-inch diameter plastic-coated wire.

4. One-inch and larger electrical jumpers will be represented by full scale diameter plastic pipe.

5. In addition to the cable trays and conduit racks, the following electrical equipment is indicated:

   - Transformers.
   - Switchgear, motor control centers, UPS, and all busways.
   - Battery racks and chargers.
   - Individual motor starters.
   - Lighting and power panels.
   - Out-of-cell light fixtures in congested areas.
   - In-cell light fixtures.
   - Power outlets.
   - Grouping of several control stations when on building walls.
   - Terminal junction boxes.

6. Individual (single) conduit runs and cables are not shown.

k) Instruments

1. Two categories of instruments are indicated on the model: (1) in-line items such as control valves, relief valves, orifice flanges, any other in-line flow measuring devices; and (2) non-in-line mounted

instruments such as local transmitters, controllers, switches, instrument panels, etc.

2. Commercially available in-line instruments are installed, when available (i.e., control valves, relief valves, etc.). Block forms to scale are installed when commercial components are not available.

3. All in-line instruments are indicated that are shown on the mechanical or utility flow diagrams for lines installed on the model. In-line instruments including control valves are colored pink.

4. Thermal relief valves will not be shown.

5. Commercially available components are installed for local transmitters, etc., where applicable. Block forms to scale are used when commercial components cannot be adapted.

6. Major instrument racks are fabricated from plastic showing width, depth, and routing.

7. In addition to the racks, the following instruments or instrument associated equipment and/or piping may be shown:

   - Local instrument panels (freestanding or a part of a packaged unit).

   - Local transmitters, controllers, switches, and analyzers.

   - Instrument junction boxes.

8. Individual conduit runs, air supply connections on the instrument air header, instrument piping, and instrument valves and flow orifice taps are not shown, except as noted in Paragraphs 9, 10 and 11.

9. One-half inch instrument jumpers will be represented by 1/32-inch diameter plastic-coated wire.

10. Three-quarter inch instrument jumpers will be represented by 1/16-inch diameter plastic-coated wire.

11. One-inch and larger instrument jumpers will be represented by full diameter scale plastic pipe.

12. All non-in-line instrument items are colored pink.

1) Miscellaneous

1. Fire protection control cabinets/panels are shown in block or cylindrical form and colored red. Sprinkler system piping manifolds are shown for space allocation only.

2. Personnel protection equipment is shown in block form and colored dark blue (i.e., emergency shower). The detail piping will not be indicated.

3. Railroads are indicated by 1/4-inch wide black tape.

4. Embeds and penetrations will not be shown.

m) Tagging

The identification of items or physical features of the model will be identified by tagging components. Tags are read looking north or west (in congested area, tagging should be oriented for ease of reading) in accordance with, but not limited to, the following:

1. Model Boards

Each model board is numbered to match the Model Board Index Drawing. Each board will be tagged with a north arrow and high point of paving, finished floor, or grade, as required.

2. Equipment and Vessels

Each piece of equipment is tagged with its equipment number as shown on the equipment list. Vessels are tagged with their numbers. Package units that are shown in block form will be tagged with its equipment number or description. Platform elevations will be indicated.

3. Buildings

Buildings, service corridors, stairs, etc., are tagged with their room number and room title.

4. Structures and Pipe Supports

Structures are not tagged. Pipe supports are numbered and tagged. Platform elevations are tagged. Coordinates are not shown.

5. Piping

Each line is tagged with its line number, line specification, service designation and size. Insulation type, tracing requirements, and slope are indicated, when applicable. Where space is limited, only the line size is given. Vessel trim lines are tagged. Anchors, mechanical shock arrestors, hanger springs, steam-out, and sample connections are identified.

6. Electrical

All electrical equipment is tagged with its number and/or name. Electrical racks will be identified.

7. Instruments

With the exception of relief valves, level gauges, controllers, and orifice flanges, all instruments are identified by number or letter on a pink button. Buttons attached to instrument components indicate the orientation of the face or operating side of the instrument. Buttons attached to pipe for instruments, such as pressure and temperature connections, indicate orientation of the piping connection.

8. Safety Class 1 items will be identified.

9. Miscellaneous

All miscellaneous equipment is tagged with a name or number for identification purposes.

10. A model board legend will be built to aid in identifying the model components.

9.6.2.4 Review and Approval

a) All responsible Fluor Daniel disciplines and Project Management will review the model to ensure that the model conforms to current flow diagrams, specifications, procedures, standard drawings, operation, maintenance and accessibility requirements, space allocation provisions, and the Client-approved facility plot plan and floor plans. The model is then corrected in accordance with model review comments and is available for Client review.

b) The Client review will be conducted for the same basic requirements as the Fluor Daniel review.

c) Fluor Daniel will review the model with the Client. The responsible disciplines will give the model walk-through presentation for their areas, describing in detail the model's features, and will document comments and attendees.

d) Approved model review comments will be incorporated into the design.

e) The model will <u>not</u> be undated in accordance with model review comments.

THIS PAGE INTENTIONALLY
LEFT BLANK

SECTION 10.0

STRUCTURAL AND CIVIL BASIS FOR DESIGN

TABLE OF CONTENTS

SECTION		PAGE
10.1	GENERAL	1
10.1.1	STRUCTURAL SYSTEMS	1
10.1.2	STRUCTURAL MATERIALS	2
10.2	DESIGN CRITERIA DOCUMENTS	2
10.3	PHYSICAL DESIGN CRITERIA	5
10.3.1	SAFETY CLASSIFICATION	5
10.3.2	DESIGN BASIS	6
10.3.3	DESIGN BASIS ACCIDENTS	6
10.4	DESIGN LOADS	8
10.4.1	GENERAL	8
10.4.2	NORMAL LOADS	8
10.4.3	SEVERE ENVIRONMENTAL LOADS	9
10.4.4	EXTREME ENVIRONMENTAL LOADS	10
10.4.5	LOADS APPLICABLE TO DESIGN CLASSIFICATIONS	11
10.5	LOAD COMBINATIONS AND ALLOWABLE STRESSES	11
10.5.1	DISCUSSION	11
10.5.2	SAFETY CLASS 3 AND 4 STRUCTURES	12
10.5.3	SAFETY CLASS 1 AND 2 STRUCTURES	13
10.6	MISCELLANEOUS DESIGN CRITERIA	15
10.6.1	FIRE-RESISTIVE STANDARDS	15
10.6.2	STAINLESS STEEL DESIGN	15
10.6.3	CONSTRUCTION LOADS	15
10.6.4	LINER PLATE	15
10.6.5	MASSIVE CONCRETE	15
10.7	FOUNDATION DESIGN CRITERIA	15
10.7.1	SOIL PROFILE	16
10.7.2	SOIL PROPERTIES	16
10.7.3	WATER TABLE	16
10.7.4	FROST DEPTH	16
10.7.5	UNDERGROUND PIPE COVER	16
10.7.6	FOUNDATION DEPTH	17
10.7.7	MINIMUM FOOTING SIZE	17
10.7.8	ALLOWABLE SOIL BEARING	17
10.7.9	SETTLEMENTS	17
10.7.10	LATERAL EARTH PRESSURES	18
10.7.11	LATERAL FORCE RESISTANCE	18
10.8	ANCHOR BOLT AND EXPANSION ANCHOR DESIGN	19
10.9	REFERENCES	29

TABLE OF CONTENTS (Continued)

PAGE

APPENDICES

Appendix 10A - Seismic Analysis and Design 10A-1/10A-33
Appendix 10B - Design Basis Wind 10B-1/10B-25
Appendix 10C - Headed Anchor Bolts and Expansion Anchors 10C-1/10C-37
Appendix 10D - HVAC Ductwork Systems Design 10D-1/10D-28
Appendix 10E - Civil Engineering and Design 10E-1/10E-12

LIST OF TABLES

TABLE	TITLE	PAGE
TABLE 10-1	SAFETY CLASSIFICATION FOR MAJOR STRUCTURAL SYSTEMS	20
TABLE 10-2	MINIMUM DESIGN LIVE LOADS	22
TABLE 10-3	ENGINEERING PROPERTIES OF SOIL	25

LIST OF FIGURES

FIGURE	TITLE	PAGE
FIGURE 10-1	LATERAL EARTH PRESSURE DIAGRAMS	27
FIGURE 10-2	ALLOWABLE NET SOIL BEARING PRESSURE	28

10.0 STRUCTURAL AND CIVIL BASIS FOR DESIGN

10.1 GENERAL

This document provides the basis for structural and civil design for the Hanford Waste Vitrification Plant (HWVP) to be located approximately 2,000 ft. west of the existing B Plant in the 200 East Area of the Hanford Reservation near Richland, Washington. The design life of the HWVP will be 40 years. Materials of construction will be noncombustible and will be provided with protective coatings resistant to corrosion. The overall design will consider safety, economy, operability, maintenance, decontamination, and decommissioning.

10.1.1 STRUCTURAL SYSTEMS

The HWVP facility consists of the following major building and structural systems:

Building No.	Building Name
1.	Vitrification Building
2.	Manipulator Repair Building (MRB)
3.	OC/REB (Operations Control/Regulated Entrance Building)
4.	Frit Storage/Cold Chem Building
5.	Canister Storage Building
6.	Sand Filter Building
7.	Fan House
8.	Switchgear/Generator Building
9.	WHT (Waste Hold Tank Vault and Building)
10.	Exhaust Stack and Pump House
11.	Cooling Tower
12.	Solar Evaporation Tank (SET)
13.	Mech./Elect. Services Building
14.	Offsite and Temporary Facilities
15.	Switchyard
16.	OAB (Operations Annex Building)

17. GFE Warehouse

18. Fabrication Shop

19. Receiving and Storage Building

Structural configuration, system and material of construction for major buildings are defined on the general arrangement or architectural drawings developed during the preliminary design phase.

10.1.2 STRUCTURAL MATERIALS

The structural systems will be constructed from one or more of the following materials:

Reinforced Concrete:

Compressive Strength (fc') = 4,000 psi
Reinforcing Steel - ASTM A615-87a (fy = 60,000 psi)

Carbon Steel:

Structural Steel - ASTM A36/A36M - 88d (Fy = 36 ksi)
Structural Tubing - ASTM A500-84 Grade B (Fy = 42 ksi)
Steel Pipe - ASTM A53-88a Type E or S Grade B (Fy = 35 ksi)
Welding Material - AWS D1.1, min. tensile strength of 70 ksi

Stainless Steel:

Plate - ASTM A240-88C Type 304L
Bars and Shapes - ASTM A276-88a Type 304L (Fy = 25 ksi all)
Pipe - ASTM A312/A312M Grade TP304L
Welding Material - Type 308L

Bolts, Nuts and Washers:

ASTM A307 - Common Bolts
ASTM A325 - High Strength Bolts
ASTM A563 - Nuts
ASTM F436 - Hardened Washers

For miscellaneous materials such as metal deck, grating, floor plate, etc., see respective project specification sections.

Refer to ASTM Specifications for specific material requirements.

10.2 DESIGN CRITERIA DOCUMENTS

	Document Title (Abbreviated)	Reference Symbol/Number	Area of Coverage
10.2.1	HWVP Functional Design Criteria	SD-HWV-FDC-001 Rev. 3	a. Primary functional criteria for design

	Document Title (Abbreviated)	Reference Symbol/Number		Area of Coverage
			b.	Classifications of structures, systems, and components
			c.	Definition of Design Basis Accidents
10.2.2	DOE General Design Criteria	DOE 6430.1A	a.	General civil, structural and architectural requirements
10.2.3	HWVP Technical Data Package	SD-HWV-DP-001	a.	Uniform technical criteria including the functions, requirements and descriptions of the HWVP site, facilities, process systems and utilities
			b.	Supplements SD-HWV-FDC-001
10.2.4	Hanford Plant Standards Standard Design Criteria Design Loads for Facilities	HPS-SDC-4.1 Rev. 11	a.	Establishes general design requirements and design load criteria for tornado, earthquake, ashfall, wind and soil loads
10.2.5	Hanford Plant Standards General Design Criteria Hanford and National Codes and Standards	HPS-SDC-1.2 Rev. 9	a.	Establishes general design standards
10.2.6	Design and Evaluation Guidelines for DOE Facilities Subjected to Natural Phenomena Hazards	UCRL-15910 June 1990	a.	Earthquake, wind/ tornado and flood design guidance and criteria for various hazard (safety class) facilities
10.2.7	Seismic Design for Buildings	TM 5-809-10	a.	Seismic design criteria and guidance

	Document Title (Abbreviated)	Reference Symbol/Number		Area of Coverage
10.2.8	Seismic Design Guidelines for Essential Buildings	TM 5-809-10-1	a.	Seismic design criteria and guidance for essential or high-risk buildings
10.2.9	Structures to Resist the Effects of Accidental Explosions	TM 5-1300	a.	Internal shock and blast load design
10.2.10	Minimum Design Loads 1982	ANSI A58.1	a.	Defines application of live, snow, and wind loads
10.2.11	Nuclear Facilities: Steel Safety-Related Structures for Design, Fabrication and Erection, 1984 Edition	ANSI N690	a.	Details of stainless steel design, and quality control requirements.
10.2.12	Uniform Building Code 1988	UBC	a.	Defines earthquake loading for Safety Class 3 & 4 structures
			b.	Masonry design
			c.	Timber design
			d.	Fire-resistive standards
10.2.13	AISC Manual of Steel Construction, Ninth Edition	AISC	a.	Details of structural steel design.
10.2.14	ACI Building Code	ACI		
	349-85		-	For nuclear safety related reinforced concrete design
	318-89		-	For minimum slab/wall reinforcing for thinner members (less than 48 inches)

	Document Title (Abbreviated)	Reference Symbol/Number		Area of Coverage
	318-89 (Chapter 21)		-	For ductile design and detailing requirements for elements resisting seismic loads in regions of moderate seismic risk. (Safety Class 1 & 2 structures)
	207.1R-87 207.2R-83		-	Massive concrete
	224-80		-	Control of cracking
	350-83		-	Concrete sanitary structures
10.2.15	Geotechnical Investigation	Dames & Moore (ref 10.1)	a.	Site preparation, foundation design, roads, and area paving
10.2.16	Structural Welding Code AWS D1.1-84	AWS D1.1	a.	Structural welds
10.2.17	AISI Specification for the Design of Cold Formed Steel Structural Members 1986 Edition	AISI	a.	Light gauge cold formed steel design
	Stainless Steel - Cold Formed Structural Design Manual - 1974 Edition		b.	Cold formed stainless steel design
10.2.18	DOE Environmental Safety and Health Protection Program for DOE Operations	DOE 5480.1A	a.	Environmental protection safety

10.3 PHYSICAL DESIGN CRITERIA

10.3.1 SAFETY CLASSIFICATION

Structures, systems and components associated with the HWVP are assigned one of the safety classifications identified below based on the potential consequence of a failure.

Safety Class 1 - Any structure, system or component including portions of process systems whose failure could cause undue risk to the environment or the safety and health of the public offsite the plant and/or area boundaries.

Safety Class 2 - Any structure, system or component including portions of process systems, where failure could adversely affect the environment or the safety and health of groups of personnel within plant and/or area boundaries.

Safety Class 3 - Any structure, system or component including portions of process systems which, as a result of being defective, could exceed acceptable radiological or hazardous material consequences or industrial safety hazards to personnel.

Safety Class 4 - Items with no significant importance to safety, health or environmental protection.

For the safety classification of major HWVP structural systems see Table 10-1 "Safety Classification for HWVP Structures".

10.3.2 DESIGN BASIS

Structures, systems and components (items) are classified by Safety Class as defined above. The Safety Class defines the mechanical and structural design criteria and the ability of the structure, system or component to withstand a Design Basis Accident (DBA) and onsite originating accidents. The HWVP is designated as non-reactor facility.

All Safety Class 1 items will be designed to withstand all DBAs identified in Section 10.3.3. Safety Class 2 items will be designed to withstand the DBAs as specified in Section 10.3.3 or when required to protect Safety Class 1 items.

Safety Class 1 structures, systems and components will be protected from potential damage that might cause them to cease to perform their function due to the failure of a non-Safety Class 1 item. Similarly, Safety Class 2 structures, systems and components will be protected from potential damage that might cause them to cease to perform their function due to the failure of a Safety Class 3 or 4 item.

All HWVP structures, systems and components will be designed to withstand the normal operating and environmental loadings specified in Section 10.4.

10.3.3 DESIGN BASIS ACCIDENTS

10.3.3.1 Design Basis Fire

The HWVP facility and systems will be designed to withstand a Design Basis Fire (DBF) in accordance with the Fire Protection Basis for Design. The DBF will be considered to be that fire which results from the burning of all combustible materials enclosed within a continuous barrier which shall be rated at a

minimum of 2 and 4 hours, where required, according to DOE Order 6430-1A; 0110-99.0.7 and 0110-6.3.

10.3.3.2 Design Basis Power Failure

The adequacy of HWVP final containment and confinement barriers will be evaluated against the Design Basis Power Failure (DBPF). The DBPF will be considered to be a total loss of power for 60 seconds and loss of normal power for 48 hours.

10.3.3.3 Design Basis Earthquake

The Design Basis Earthquake (DBE) for Safety Class 1 structures, systems and components is a ground motion with a peak horizontal free-field ground acceleration of 0.2 g and is represented by the response spectra shown on Figure 10A-1. The Design Basis Earthquake for Safety Class 2 structures, systems and components is a ground motion with a peak horizontal free-field ground acceleration of 0.12 g and is represented by the response spectra shown on Figure 10A-2. In addition to the Design Basis Earthquake, all Safety Class 1 equipment, supports and components must be designed for the small magnitude, near-field earthquake (NFE) represented by the response spectra shown in Figure 10A-3.

10.3.3.4 Design Basis Tornado

Not applicable for non-reactor type facilities per Section 10.2.4 document.

10.3.3.5 Design Basis Wind

The Design Basis Wind (DBW) for Safety Class 1 items is a wind with a velocity of 90 miles per hour (Fastest-mile). The Design Basis Wind for Safety Class 2 items is a wind with a velocity of 80 miles per hour (Fastest-mile). Safety Class 1 and 2 items shall be designed to withstand wind generated missiles due to their respective Design Basis Winds as given in Section 10.4.

10.3.3.6 Design Basis Flood

The elevation of the HWVP plant site has been determined to be above the maximum extent of the Hanford Site Design Basis Flood Level (DBFL) and is not subject to regional flood hazards. However, the HWVP facility roof and site drainage systems may be subjected to rainfall which may cause local flooding. The storm associated with the Design Basis Flood for Safety Class 1 items has an annual probability of exceedance of $1x10^{-5}$. The storms associated with the Design Basis Floods for Safety Class 2, 3, and 4 have an annual probability of exceedance of $1x10^{-4}$, $5x10^{-4}$, $2x10^{-3}$ respectively.

10.3.3.7 Design Basis Ashfall

The Design Basis Ashfall for Safety Class 1 items is as specified in Section 10.4.

10.3.3.8 Design Basis Train Railcar Crash

The Design Basis Train Railcar Crash for Safety Class 1 items is the impact from the worst probable combination of one loaded railcar and one switch master car at the maximum credible speed. On HWVP this applies only to the Vitrification building railroad well. In addition, the facility rail spur will be designed so Safety Class 1 and 2 items have consequence-mitigating features, such as, derailing device and runaway train earthen barrier, for loaded cars and one locomotive at maximum credible speed.

10.3.3.9 Design Basis Helicopter Crash

Safety analysis has demonstrated that the risk associated with a site security helicopter crash is acceptable. Therefore, specific design features will not be incorporated to mitigate this accident.

10.4 DESIGN LOADS

10.4.1 GENERAL

HWVP structures and components will be designed to resist all applicable loads listed in Section 10.4. Load combinations will be in accordance with Section 10.5.

10.4.2 NORMAL LOADS

10.4.2.1 Dead (D)

Dead loads include the gravity load of structures, permanent equipment, piping, static liquid, soil, long-term stored materials, permanent partitions and any other permanent static load.

10.4.2.2 Live (L)

Live loads are the loads superimposed on structures or components due to the use and occupancy of the facility. Live loads, in general, include the weight of movable objects such as personnel, temporarily stored materials, movable partitions, maintenance equipment, forklifts, hoists and cranes. Live loads will be considered to be in accordance with ANSI A58.1. Roof live loads will have the symbol L_r (see Table 10-2 - Minimum Design Live Loads).

10.4.2.3 Self-Straining (T)

Self-straining forces and effects arise from restraint of expansion or contraction due to temperature change, shrinkage, creep or

differential settlement. These forces will be considered in the facility design.

10.4.2.4 Pressure (F)

Fluid pressure loads due to containment of gases and liquids within piping, equipment or structures will be considered in the facility design.

10.4.2.5 Lateral Earth Pressure (H)

The lateral earth pressures acting on foundations, buried walls or retaining walls are defined herein under Section 10.7, Foundation Design Criteria.

10.4.2.6 Other Loads

Additional loads, such as crane loads, impact loads, canister transporter load, rain loads on roofs and thermal loads will be considered where applicable.

10.4.3 SEVERE ENVIRONMENTAL LOADS

10.4.3.1 Snow (S)

Snow loading on roofs or other exposed surfaces will be considered to be in accordance with ANSI A58.1, Section 7, based on the following:

a) Ground snow load (P_g) = 15 psf

b) ANSI Occupancy Category III (Table 1)

c) ANSI Exposure Factor (C_e) = 1.0 (Table 8)

In no case will roofs be designed for less than 20 psf snow load. The effects of snow drifts will be considered.

10.4.3.2 Wind (W)

Wind loading on Safety Class 3 and 4 items will be in accordance with ANSI A58.1, Section 6 and using the following criteria:

	Safety Class 3	Safety Class 4
Annual Probability of Exceedance	2×10^{-2}	2×10^{-2}
Basic Wind Speed (mph)	70	70
Importance Factor (I)	1.07	1.00
Exposure Category	C	C
Occupancy Category	III	III

10.4.3.3 Earthquake, UBC (E_u)

Uniform Building Code (UBC) Earthquake loading will be determined by the static force procedure given in Section 2312 of the UBC as modified in Appendix 10A of this document.

10.4.3.4 Earthquake, OBE (E_o)

No earthquake loading for Operating Basis Earthquake (OBE) is required for non-reactor facility per Section 10.2.4 document.

10.4.4 EXTREME ENVIRONMENTAL LOADS

10.4.4.1 Earthquake, DBE(E_d)

Earthquake loading for Design Basis Earthquake (DBE) conditions is defined by design spectra representing seismic ground motions at the surface. These spectra are associated with horizontal peak ground accelerations of 0.2g for Safety Class 1 and 0.12g for Safety Class 2 items. The spectra are given on Figures 10A-1 and 10A-2 of Appendix 10A.

10.4.4.2 Earthquake, NFE(E_n)

Safety Class 1 components, equipment and their supports that require proven operability during a seismic event, must be evaluated with floor response spectra developed from the small magnitude near-field earthquake (NFE) spectra provided in Figure 10A-3. See Section 10A.2.7 of Appendix 10A

10.4.4.3 Tornado, DBT (W_t)

No DBT loadings for non-reactor facility per Section 10.2.4 document.

10.4.4.4 Design Basis Wind, DBW (W_F)

Safety Class 1 and 2 structures and components shall be designed in accordance with ANSI A58.1 and using the wind and missile criteria and procedure given in Appendix 10B herein. Note that missile impact loads are not applied simultaneously with wind loads.

10.4.4.5 Volcanic Ashfall (V)

All Safety Class I facilities are required to meet the design basis ashfall criteria as follows:

Thickness of ashfall:

4.5 inches uncompacted
3 inches compacted

Density of ash:

Dry, loose	72 pcf
Dry, compacted	96 pcf
Wet, compacted	101 pcf

Design ashfall loading:

24 psf dry, compacted
27 psf dry, uncompacted

Ashfall loading is to be factored as a live load. Dry uncompacted ashfall in combination with snow loading will normally produce the highest loading for design.

10.4.5 LOADS APPLICABLE TO DESIGN CLASSIFICATIONS

		Safety Class			
Normal Loads	Symbol	1	2	3	4
Dead	D	Yes	Yes	Yes	Yes
Live	L	Yes	Yes	Yes	Yes
Live, roof	L_r	Yes	Yes	Yes	Yes
Self-strain	T	Yes	Yes	Yes	Yes
Pressure	F	Yes	Yes	Yes	Yes
Lat. Earth	H	Yes	Yes	Yes	Yes
Severe Environmental Loads					
Snow	S	Yes	Yes	Yes	Yes
Wind	W	Yes	Yes	Yes	Yes
Earthquake, UBC	E_u	Yes	Yes	Yes	Yes
Earthquake, OBE	E_o	-	-	-	-
Extreme Environmental Loads					
Earthquake, DBE	E_d	Yes	Yes	No	No
Tornado, DBT	W_t	-	-	-	-
Volcanic Ashfall	V	Yes	No	No	No
Design Basis Wind	W_E	Yes	Yes	No	No
Earthquake, NFE	E_n	Yes	-	-	-

10.5 LOAD COMBINATIONS AND ALLOWABLE STRESSES

10.5.1 DISCUSSION

All concrete will be designed in accordance with the ACI Strength Design (SD) method and all structural steel in accordance with the AISC Allowable Stress Design (ASD) method or Plastic Yield Strength (K) Design method.

Loads will be considered to act in the following combinations and in whichever combination produces the most unfavorable effect in the building, foundation or structural member under consideration. The most unfavorable effect may occur when one or more of the contributing loads are not acting.

In loading combinations including earthquake motions, the live load is limited to that expected to be present when the plant is operating. When computing seismic inertial forces dead load plus 25 percent of uniformly distributed floor live loads will be used as seismic dead load. Unloaded cranes and movable equipment likely to be in place will be included at 100 percent.

Snow load, when combined with wind or design basis wind load, will be included at 50 percent and vice-versa. Snow load will not be combined with earthquake or tornado loads.

Roof live load will not be combined with severe or extreme environmental loads. Ashfall loading will not be combined with earthquake, wind, or tornado loads but will be combined with snow load. Earthquake and wind or tornado loads will not be considered to act simultaneously. Directional effects must be included.

For load combinations, where any load reduces the effects of other loads, the corresponding coefficient for that load is taken as 0.85 for allowable stress design and 0.9 for concrete ultimate strength design if it can be demonstrated that the load is always present or occurs simultaneously with the other loads. Otherwise, the coefficient for that load is taken as zero.

10.5.2 SAFETY CLASS 3 AND 4 STRUCTURES

10.5.2.1 Steel (Allowable Stress Design)

Steel elements will be designed so that the AISC allowable stress (AS) will not be less than that required by the following equations. When the structural effects of T, F and H are significant, they will be included with the following load combinations:

a) $AS = D + L + (L_r \text{ or } S)$

b) $1.33\ AS = D + L + (W \text{ or } E_u)$

c) $1.33\ AS = D + L + W + 0.5S$

d) $1.33\ AS = D + L + S + 0.5W$

e) $1.33\ AS = 0.85\ D \pm (W \text{ or } E_u)$

f) $AS = D + W$

The load combination factor of 1.33 applied to load combinations b, c, d and e above reflects a 1/3 allowable stress increase per AISC.

10.5.2.2 Concrete (Strength Design)

Concrete elements will be designed so that the ACI ultimate strength (U) will not be less than that required by the following equations:

a) $U = 1.4\ D + 1.7\ L + 1.7\ (L_r \text{ or } S) + 1.4\ F + 1.7\ H$

b) $U = 0.75\ [1.4\ D + 1.7\ L + 1.7\ (W \text{ or } 1.1\ E_u) + 1.4\ (T + F) + 1.7\ H]$

c) $U = 0.75\ [1.4\ D + 1.7\ L + 1.7\ (W + 0.5S) + 1.4\ (T + F) + 1.7\ H]$

d) $U = 0.75\ [1.4\ D + 1.7\ L + 1.7\ (S + 0.5W) + 1.4\ (T + F) + 1.7\ H]$

e) $U = 0.9\ D \pm (1.3\ W \text{ or } 1.43\ E_u)$

f) $U = 1.2\ D + 0.5L + 1.3W$

10.5.3 SAFETY CLASS 1 AND 2 STRUCTURES

10.5.3.1 Steel (Allowable Stress Design)

Steel elements will be designed so that the AISC allowable stress (AS) will not be less than that required by the following equations. F_u is the allowable seismic in elastic demand-capacity ratio as specified in Table 10A-1, Appendix 10A. When the structural effects of T, F and H are significant, they will be included with the following load combinations:

a) $AS = D + L + (L_r \text{ or } S)$

b) $AS = D + L + S + V$

c) $1.33\ AS = D + L + (W_E \text{ or } W_t \text{ or } E_u)$

d) $1.33\ AS = D + L + (W_E \text{ or } W_t) + 0.5S$

e) $1.33\ AS = D + L + S + (0.5W_E \text{ or } 0.5W_t)$

f) $1.33\ AS = 0.85\ D + (W_E \text{ or } W_t)$

g) $1.7\ AS = 1.2\ D + L + E_o$

h) $1.7\ AS = 0.8\ D \pm E_o$

i) $AS = D + (W_E \text{ or } W_t)$

j) $1.7\ AS = D + L + E_d/F_u$

k) $1.7\ AS = .85\ D \pm E_d/F_u$

The load combination factor of 1.33 applied to load combinations c, d, e and f above reflects a 1/3 allowable stress increase per AISC. The 1.7 factor in load combinations g, h, j and k is in lieu of the 1/3 AISC allowable stress increase.

10.5.3.2 Steel (Strength Design)

Steel elements will be designed so that the AISC plastic strength (K) will not be less than that required by the following equations. F_u is the allowable seismic inelastic demand-capacity ratio as specified in Table 10A-1, Appendix 10A. When the structural effects of T, F and H are significant, they will be included with the following load combinations:

a) $K = 1.7\ [D + L + (L_r \text{ or } S + V)]$

b) $K = 1.3\ [D + L + 0.5S + (W_E \text{ or } W_t)]$

c) $K = 1.3\ [D + L + S + (0.5\ W_E \text{ or } 0.5\ W_t)]$

d) $K = 1.3\ (D + L + E_d/F_u)$

e) $K = 1.3\ (D + E_d/F_u)$

f) $K = 1.3\ [D + L + (W_E \text{ or } W_t)]$

g) $K = D + 1.3\ (W_E \text{ or } W_t \text{ or } E_d/F_u)$

10.5.3.3 Concrete (Strength Design)

Concrete elements will be designed so that the ACI ultimate strength (U) will not be less than required by the following equations. F_u is the allowable seismic inelastic demand-capacity ratio per Table 10A-1, Appendix 10A.

a) $U = 1.4D + 1.7L + 1.7\ [L_r \text{ or } (S + V)] + 1.4\ F + 1.7H$

b) $U = 0.75\ [1.4D + 1.7L + 1.7\ W_E + 1.4\ (T + F) + 1.7H]$

c) $U = 0.75\ [1.4\ D + 1.7\ L + 1.7\ (W_E + 0.5S) + 1.4\ (T + F) + 1.7H]$

d) $U = 0.75\ [1.4\ D + 1.7\ L + 1.7\ (S + 0.5W_E) + 1.4\ (T + F) + 1.7\ H]$

e) $U = 0.9\ D + 1.3\ W_E$

f) $U = 1.2\ (D + T + F) + L + H + E_o$

g) $U = 0.8\ D \pm E_o$

h) $U = D + T + F + L + H + E_d/F_u$

i) $U = D \pm E_d/F_u$

j) $U = D + T + F + L + H + W_t$

10.6 MISCELLANEOUS DESIGN CRITERIA

10.6.1 FIRE-RESISTIVE STANDARDS

The HWVP facility will be designed with fire-resistive standards in accordance with the Fire Protection Basis for Design and the Uniform Building Code, Chapter 43.

10.6.2 STAINLESS STEEL DESIGN

Stainless steel will be designed in accordance with ANSI N690 with the appropriate yield strength value for Fy from the ASTM specifications. Cold-formed stainless steel design will be as stated in the AISI Stainless Steel Specification. Stainless steel studs will be used to anchor embedded stainless steel plates/shapes in concrete.

10.6.3 CONSTRUCTION LOADS

The HWVP facility analysis and design will account for appropriate construction loads. Floor design will account for the loading due to the construction of floors/roofs above. The floor loading will include such items as shoring, reshoring, formwork, wet concrete, construction crews/equipment and plant equipment transportation/installation loads. Crane loading adjacent to below-grade walls and structures for construction operations and plant maintenance will be considered in design.

10.6.4 LINER PLATE

Liner plate will be installed by the "wallpaper" method. Plate material will be stainless steel per Section 10.1.2. Minimum plate thickness will be 3/16-inch for walls and 1/4-inch for floors. The design of liner plate and embedments will consider creep and shrinkage of concrete, earthquake movements, negative cell pressure, temperature effects (i.e., installed versus operating), fabrication and erection tolerances, distortions from welding and gravity loading. Liner plate will be attached to embedded stainless steel shapes and studs.

10.6.5 MASSIVE CONCRETE

The recommendations of ACI 224 and ACI 207 for control of cracking will be included in the design requirements for massive concrete (i.e., elements over four feet in thickness).

10.7 FOUNDATION DESIGN CRITERIA

Foundation design shall meet the requirements of the UBC and the recommendations made in the Geotechnical Investigation Report (Ref. 10.1) as given herein.

10.7.1 SOIL PROFILE

The soil profile at the HWVP site consists essentially of three strata as described below:

Stratum 1 - Light brown silt and very fine to fine sand (SM, ML) to a depth of 5 to 9 feet

Stratum 2 - Light brown silty sand with some gravel and cobbles (SM, GM) 3 to 7 feet below stratum 1.

Stratum 3 - Light to grayish brown fine to medium sand (SM) dense to very dense condition up to 250 feet.

10.7.2 SOIL PROPERTIES

The engineering properties of the soil to be used for design are listed in Table 10-3. These properties assume that the upper stratum 1 will be densified (compacted) prior to foundation construction.

10.7.3 WATER TABLE

The water table is about 310 feet below-grade and, therefore, will not be a consideration.

10.7.4 FROST DEPTH

The design frost depth is 30 inches below finished grade.

10.7.5 UNDERGROUND PIPE COVER

The minimum depth of earth cover over underground pipes is as follows:

a) Frequent Flows

For pipes and mains with frequent flow and located under roads, streets, parking areas, or other locations where the earth cover is required to be well compacted, the minimum earth cover above the top of the pipe will be 36 inches. For pipes located elsewhere the minimum earth cover above the top of the pipe will be 30 inches.

b) Infrequent Flows

Where water in pipes and mains does not flow normally, or where water is infrequently used (dead end installations, pipe lines servicing safety showers, fire hydrants, etc.), the minimum earth cover above the top of the pipe will be 42 inches.

c) Drainage Culverts

See Appendix 10E for cover requirements.

10.7.6 FOUNDATION DEPTH

The minimum depth to the bottom of foundations of permanent structures (except elevated tanks and stacks) will be 2'-6" below finished grade, except that footings will bear on undisturbed earth, whichever is deeper.

The minimum depth to the bottom of foundations supporting elevated tanks and stacks will be 4'-0" below finished grade, except that footings will bear on undisturbed earth, whichever is deeper.

If it is not possible or practicable to place footings on undisturbed earth, footings and foundations may be placed on properly compacted backfill that has bearing capacity and settlement sufficient to meet design requirements.

10.7.7 MINIMUM FOOTING SIZE

Minimum footing width shall be 2 feet 6 inches. HWVP footings will be sized to provide a minimum stability ratio against overturning and sliding of 1.5. These values are applicable to all lateral load conditions other than seismic. Stability ratios for seismic loads are specified in Appendix 10A, Section 10A.3.7.

The stability ratio for overturning is defined as the applicable total externally dead load resisting moment divided by the maximum value of induced overturning moment statically applied on the structure. The sliding stability ratio is defined as the applicable resisting forces divided by the maximum horizontal force applied to the structure in a given direction.

10.7.8 ALLOWABLE SOIL BEARING

The maximum unfactored net soil bearing pressure will not exceed the net allowable soil bearing pressure as determined from Figure 10-2. Allowable bearing pressure may be increased one-third for transient loads such as wind or seismic.

All values of allowable net soil bearing capacities obtained from Figure 10-2 will result in total elastic settlement of less then 1 inch for footings and less than 2.5 inches for mat foundations. The larger settlement value for mat foundations recognizes that differential settlements across a large flexible mat will be within tolerable limits for most steel and concrete structures.

10.7.9 SETTLEMENTS

The settlements will be elastic in nature, and will occur essentially simultaneous with the application of loads. No long term settlements are anticipated.

The effects of differential settlements on a structural system will be accounted for. From the estimated settlement values presented in Table 2 of the Geotechnical Investigation Report (Ref. 10.1) the differential settlement for flexible mat foundations and between adjacent footings is about one-half the total settlement. For a rigid mat the settlement will be nearly uniform.

The effect of settlement of the heavily loaded vitrification building on adjacent building/structure foundations shall be considered unless the construction schedule is such that the adjacent foundations are constructed after most of the vitrification building construction and, therefore, most of the settlement has taken place.

Total settlement of a footing will be the sum of the footing settlement plus the floor slab settlement values.

10.7.10 LATERAL EARTH PRESSURES

Lateral earth pressure diagrams are shown on Figure 10-1. The active earth pressure coefficient specified in Table 10-3 will be used for the calculation of earth pressures against yielding walls.

For rigid walls, the at-rest earth pressure coefficient specified in Table 10-3 will be used, with 115 psf uniform lateral pressure added to the result to account for horizontal stresses built up due to backfill compacted to at least 95 percent modified proctor density.

Dynamic lateral earth pressures will be calculated using the Mononobe-Okabe formulations as described in Appendix 10A.

Lateral pressures on below grade walls due to uniform operating or construction surcharge loadings will be calculated using appropriate earth pressure coefficients. Lateral pressures due to point and line loads will also be considered.

Where below-grade, exterior walls will be subjected to a fluid head, the hydrostatic head will be added to the equivalent fluid pressure of retained earth.

10.7.11 LATERAL FORCE RESISTANCE

Lateral loads may be resisted by a combination of passive pressure and friction. Passive resistance of compacted fill may be considered equivalent to a fluid with a density equal to $K_p\gamma$ pcf. This includes a safety factor of 1.5. When used in combination with friction, use one-half of the above passive resistance to account for the variable strain required to mobilize the soil shear strength (friction).

Passive resistance of compacted fill to dynamic loads will be calculated using a variation of the Mononobe-Okabe formulations as described in Appendix 10A.

10.8 ANCHOR BOLT AND EXPANSION ANCHOR DESIGN

Anchor bolts and expansion anchors will be designed in accordance with ACI 349-85 and Appendix 10C herein.

TABLE 10-1
SAFETY CLASSIFICATION FOR MAJOR STRUCTURAL SYSTEMS[1]

Bldg No.	Building Name	Safety Classification
1.	Vit Building, Exterior Walls and 4th Floor Slab	1
	Vit Building, 4th floor Steel Structure and Stack	3
	Rail Road Well/Air-Lock/Shield Door	3/2/1
2.	Manipulator Repair Building	3
3.	OC/REB (Operation Control/Regulated Entrance Building)	3
4.	Frit Storage, Cold Chemical Building	3
	Acid Curbs	2
5.	Canister Storage Vault	2
	HVAC Shelter	2
	Aboveground Operating Structure, Exhaust Stack	3
6.	Sand Filter, By-Pass HEPA Filter	1
7.	Fan House/Final HEPA Filter, Exhaust Fans, Ducts, Controls	3/1
	Exhaust Fan Shutdown Controls	1
8.	Switchgear, Generator Building/Generators	3/1
9.	Waste Hold Tank (WHT) Vault/Primary Tank	3/2
	HVAC Shelter	2
	WHT Building	3

NOTE:

(1) Based on HWVP Safety Class Rationale Final Report, Transmittal No. FRT-991, May 18, 1990

TABLE 10-1
SAFETY CLASSIFICATION FOR MAJOR STRUCTURAL SYSTEMS[1]
(Continued)

Bldg No.	Building Name	Safety Classification
10.	Stack and Pumphouse/Fire Water Pumps	3/1
11.	Cooling Tower	3
12.	Solar Evaporation Tank	3
13.	Mechanical/Electrical Service Building	3
14.	Offsite and Temporary Facilities	3

NOTE:

(1) Based on HWVP Safety Class Rationale Final Report, Transmittal No. FRT-991, May 18, 1990

TABLE 10-2
MINIMUM DESIGN LIVE LOADS

OCCUPANCY OR USE	UNIFORM LOAD[1] (LBS/FT^2)	CONCENTRATED LOAD (LBS)
Access floor systems (computer use)	100	2000[2]
Access floor systems (office use)	50	2000[2]
Accessible ceilings	20	200
Ash	See Sec.10.4	
Canyon cover blocks/plates	100	One cover block stacked on top
Change rooms	100	2000[2]
Concentrated load on floor beams, floor girders and panel points of roof and floor trusses.		2000[4]
Concentrated load on floor slabs		2000[2]
Control rooms	250	2000[2]
Corridors	100	2000[2]
Crane maintenance areas	250	jack point loads
Electrical racks (each level)	25[3]	
Electrical switchgear room (equip. wt. extra)	100	2000[2]
Elevator machine room grating	100	300[5]
File rooms, library stack rooms	125	1500[2]
Finish light floor plate construction	100	200
Fire sprinkler supports	30	250
Handrails and guard rails	25 or 50[7]	200[6]
HVAC supports	30[3]	
HVAC equipment rooms	100	
Laboratories	100	

TABLE 10-2
MINIMUM DESIGN LIVE LOADS
(Continued)

OCCUPANCY OR USE	UNIFORM LOAD[1] (LBS/FT^2)	CONCENTRATED LOAD (LBS)
Laundry rooms	100	
Lobbies	100	
Lunchrooms	100	
Mezzanines	100	
Offices	50	2000[2]
Operating Platforms	200	
Operating and equipment rooms	200	3000[2]
Partitions and interior walls	5 psf, lateral	
Piperacks	30	
Railroad support structures	Coopers E-80	
Restrooms	60	
Roofs	20	
Sidewalks	250	8000
Snow	See Sec. 10.4	
Stairs and exitways	100	1000
Stair treads	--	300[5]
Storage (heavy) Storage (light)	250 125	
Surcharge outside and adjacent to structures	250	8000[8]
Truck support structures	AASHTO HS20-44	
Elevated walkways and personnel platforms	60	

TABLE 10-2
MINIMUM DESIGN LIVE LOADS
(Continued)

OCCUPANCY OR USE	UNIFORM LOAD[1] (LBS/FT^2)	CONCENTRATED LOAD (LBS)
Warehouses	250	Fork Lift Truck Load
Window platforms at shield windows (includes weight of window plus cart)	60	23,000[9]

Notes:

(1) See UBC Section 2306 for live load reduction.

(2) Load placed upon any space 2.5 feet square, not combined with uniform live load per UBC Sec. 2304(c) first paragraph.

(3) Load listed includes dead plus live load.

(4) Load applied so as to maximize moment or shear. This load is not carried to supports (columns or walls) and not combined with seismic.

(5) Load is applied on 4 inch square area.

(6) Applied in any direction at top of railing, not combined with uniform load.

(7) A load per lineal foot to be applied horizontally at a right angle to the top rail. Use 50 plf for exit facilities serving an occupant load greater than 50 and 25 plf elsewhere.

(8) Wheel load not to be combined with uniform live load. Railroad surcharge where applicable shall be considered per A.R.E.A.

(9) Load applied on any space 5 feet square, not combined with uniform live load

TABLE 10-3

ENGINEERING PROPERTIES OF SOIL

Parameter	Symbol	Units	Stratum 1[1]	Stratum 2[1]	Stratum 3[1]
Bulk Density	γ	pcf	110	110	110
Angle of Internal Friction	Ø	degrees	35	38	38
Poisson's Ratio	ν	--	.3	.25	.25
Cohesion	c	--	0	0	0
Modulus of Elasticity	E	psi			
Static			3500	7000	10500/ 14000[2]
Dynamic			35000	70000	105000/ 140000[2]
Shear Modulus	G	psi			
Static[3]			1350	2000	4200/5600[2]
Dynamic			6950	20800	34700
Coefficient of Active Earth Pressure Static (Dynamic)	K_a	--	.27 (.44)	.24 (.40)	.24 (.40)
Coefficient of At Rest Earth Pressure Static (Dynamic)	K_o	--	.43 (.52)	.38 (.46)	.38 (.46)
Coefficient of Passive[4] Earth Pressure Static (Dynamic)	K_p	--	2.5 (2.0)	2.8 (2.3)	2.8 (2.3)
Coefficient of Friction between soil and footing	μ	--	.42	.47	.47
Vertical coefficient of Subgrade Reaction	K_{v1}	pci			
Static[5]			150	275	300
Dynamic[5]			1500	2750	3000
Horizontal coefficient of Subgrade Reaction	K_{h1}	pci			
Static			25(Z/D)[6]	35(Z/D)	40(Z/D)
Dynamic			250(Z/D)	350(Z/D)	400(Z/D)
Permeability	k	cm/sec	10^{-2}	10^{-2}	10^{-2}

TABLE 10-3

ENGINEERING PROPERTIES OF SOIL
(Continued)

Parameter	Symbol	Units	Stratum 1[1]	Stratum 2[1]	Stratum 3[1]

Notes:

(1) Stratum 1 is above EL.690 ft., Stratum 2 is EL.698-693 ft., Stratum 3 is below EL.693 ft.

(2) Below EL.673 ft.

(3) $G = \frac{E}{2(1+\nu)}$

(4) Values based on 1.5 factor of safety.

(5) Values based on 1-foot square rigid plate. To determine vertical modules of subgrade reaction for square or rectangular footing use the following relationship:

Square Footing, $K_s = K_{v1} \left(\frac{B+1}{2B}\right)^2$

Rectangular Footing, $K_s = K_{v2} \left(\frac{B+1}{2B}\right)^2$, $K_{v2} = K_{v1} \frac{m+0.5}{1.5m}$

where,

K_s = vertical subgrade reaction for a footing or mat of width B.
K_{v1} = coefficient given in above table for 1-foot square plate
m = ratio of length to width of rectangular footing (L/B)

(6) Z = depth below ground surface

D = depth to bottom of wall from ground surface

YIELDING WALLS

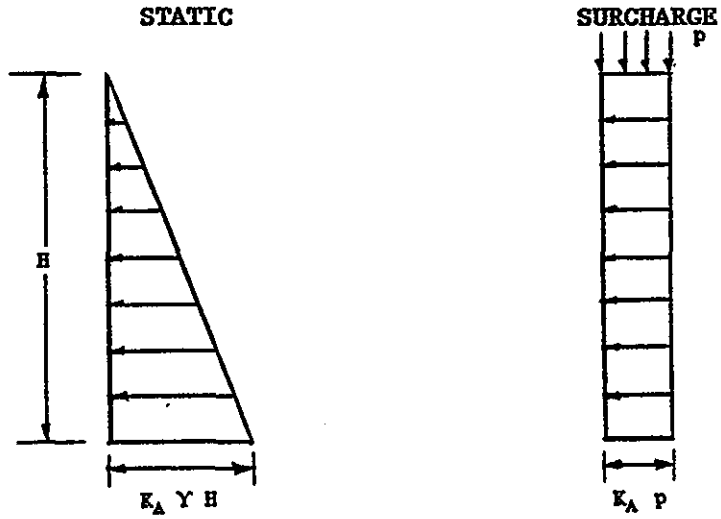

Static Pressure = K_A Y H + K_A p
H = Depth Below Grade
Y = Backfill Specific Weight
K_A = Active Earth Pressure Coefficient
p = Surcharge

UNYIELDING WALLS

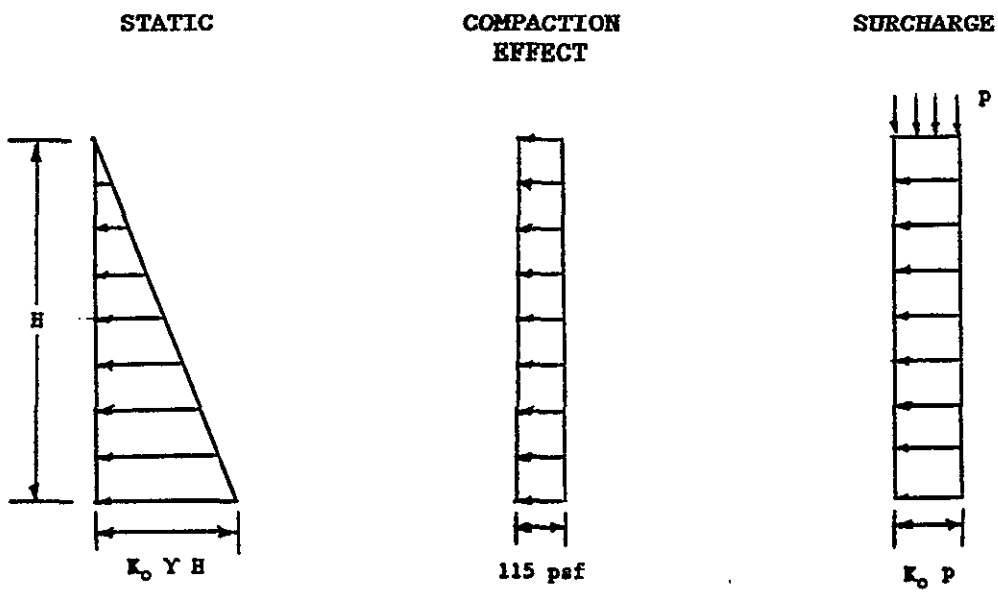

Static Pressure = K_o Y H + K_o p + 115 psf
K_o = At Rest Earth Pressure Coefficient

FIGURE 10-1
LATERAL EARTH PRESSURE DIAGRAMS

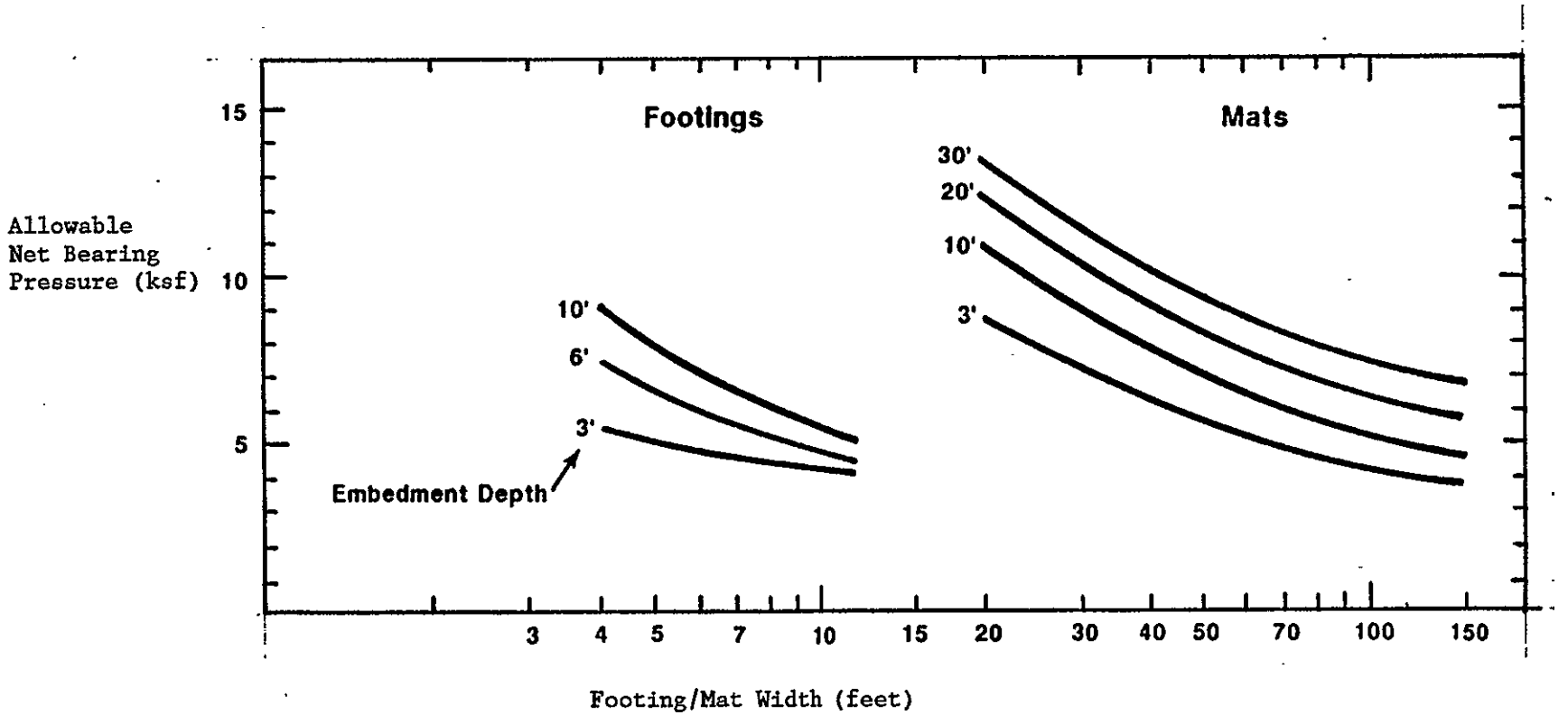

Note:

Allowable bearing pressures selected from chart above are those which will result in total settlements of less than 1 inch for footings and less than 2.5 inches for mats. Settlement estimates are based on typical soil profile consisting of 12 feet of Stratum 1 followed by 5 feet of Stratum 2 over the deep deposit of Stratum 3. The settlements will be elastic in nature, and will occur essentially simultaneous with the application of load.

FIGURE 10-2
ALLOWABLE NET SOIL BEARING PRESSURE
(Ref: 10.1)

10.9 REFERENCES

10.1 Dames & Moore, "Report of Geotechnical Investigation, Proposed Hanford Waste Vitrification Plant," Hanford, Wash., Nov 15, 1989 and supplements.

10.2 Coats, D.W. and R.C. Murray, "Natural Phenomena Hazards Modeling Project: Extreme Wind/Tornado Hazard Models for Department of Energy Sites," UCRL 53526 Rev. 1, Lawrence Livermore National laboratory, August 1985.

10.3 Coats, D.W. and R.C. Murray, "Natural Phenomena Hazards Modeling Project: Seismic Hazard Models for Department of Energy Sites," UCRL 53582 Rev. 1, Lawrence Livermore National Laboratory, November 1984.

10A.1 Biggs, J.M., Introduction to Structural Dynamics, McGraw-Hill, 1964.

10A.2 Bathe, K.J., E.L. Wilson, and F.E. Peterson, "SAP IV-Structural Analysis Program for Static and Dynamic Response of Linear Systems," Report EERC 73-11, College of Engineering, University of California, Berkeley, June 1973, revised April 1974.

10A.3 RDT F 9-2, "Seismic Requirement for Design of Nuclear Power Plants and Nuclear Test Facilities," RDT Standard, U.S. Department of Energy, Office of Nuclear Energy Programs, January 1979.

10A.4 U.S. Nuclear Regulatory Commission, "Combining Modal Response and Spatial Components in Seismic Response Analysis," Regulatory Guide 1.92 Rev. 1, February 1978.

10A.5 Wilson, E.L., A. Der Kiureghian, and E.P. Bayo, Short Communications "A Replacement for the SRSS Method in Seismic Analysis," Earthquake Engineering and Structural Dynamics, Vol. 9, 1981, pp. 187-194.

10A.6 "SHAKE, A Computer Program for Earthquake Response Analysis of Horizontally Layered Sites," Report No. EERC 72-12, Earthquake Engineering Research Center, University of California, Berkeley, December 1972.

10A.7 "FLUSH, A Computer Program for Approximate 3-D Analysis of Soil-Structure Interaction Problems," Report No. EERC 75-30, Earthquake Engineering Research Center, University of California, Berkeley, November 1975.

10A.8 Mononobe, N. and H. Matsuo, "On the Determination of Earth Pressures During Earthquakes," Proceedings, World Engineering Conference, Vol. 9, 1929, p. 176.

10A.9 Okabe, S., "General Theory of Earth Pressure," Journal Japanese Society of Civil Engineers, Vol. 12, No. 1, 1926.

10A.10 Kapilla, I.P., "Earthquake Resistant Design of Retaining Walls," Second Earthquake Symposium, University of Roorkee, India.

10A.11 Seed, H.B. and R.V. Whitman, "Design of Earth Retaining Structures for Dynamic Loads," ASCE Specialty Conference on Lateral Stresses in Ground and Design of Earth Retaining Structures, New York, 1970, pp. 103-148.

10A.12 Dowrick, D.J., Earthquake Resistant Design, John Wiley, New York, 1977.

10A.13 U.S. Nuclear Regulatory Commission, "Development of Floor Design Response Spectra for Seismic Design of Floor-Supported Equipment or Components," Regulatory Guide 1.122, September 1976.

10A.14 Nigam, N. and P. Jennings, "Digital Calculation of Response Spectra from Strong Motion Earthquake Records," California Institute of Technology, Pasadena, California, June 1968.

10A.15 Structural Mechanics Associates, Inc. (SMA), "FLRPC - A Program for Direct Computation of In-Structure Response Spectra - Documentation and Verification Manual," Report SMA 16801-01, May 1982.

10A.16 Amin, M., et al, "Earthquake Response of Multiply Connected Light Secondary Systems by Spectrum Methods," Seismic Analysis of Pressure Vessels and Piping Components, American Society for Mechanical Engineers, pp. 103-129, 1977.

10A.17 ORO-EP-120 Rev. 1, "Seismic Design Criteria for the Gas Centrifuge Enrichment Plant-GCEP," Office of the Deputy Manager for Enrichment Expansion Projects, Oak Ridge Operations Office, Department of Energy, August 1980.

10A.18 Seed, H.B., W.T. Wong, I.M. Idriss, and K. Tokimatsu, "Moduli and Damping Factors for Dynamic Analyses of Cohesionless Soils," UCB/EERC - 84/14, September 1984.

10B.1 Structural Analysis and Design of Nuclear Plant Facilities, ASCE, Manuals and Reports on Engineering Practice - No. 58, 1980.

10B.2 Rotz, J.V., "Evaluation of Tornado Missile Impact Effects on Structures," Proceeding of the Symposium on Tornadoes, June 22-24, 1976.

10B.3 Biggs, J.M., Introduction to Structural Dynamics, McGraw-Hill, 1964.

10D.1 "Round Industrial Duct Construction," Sheet Metal and Air Conditioning Contractors National Association, Third Edition, 1977.

10D.2 "Rectangular Industrial Duct Construction," Sheet Metal and Air Conditioning Contractors National Association, Third Edition, 1980.

10D.3 Timoshenko, S, Theory of Plates and Shells, McGraw-Hill, 1959.

10D.4 Roark, R.J. and Young, W.C., Formulas for Stress and Strain, McGraw Hill, 1975.

10D.5 Kleinlogel, Rigid Frame Formulas, Frederick Ungar Publishing Co., 1976.

10E.1 U.S. Department of the Army, TM 5-818-5, "Dewatering and Ground Water Control."

10E.2 American Association of State Highway and Transportation Officials (AASHTO), AASHTO HB-13, "Standard Specification for Highway Bridges," Twelfth Edition, 1977.

10E.3 American Society of Civil Engineers (ASCE), ASCE MOP No. 37, "Design and Construction of Sanitary and Storm Sewers," Manual and Report No. 37, 1969.

10E.4 U.S. Department of the Army, TM 5-814-1, "Sanitary and Industrial Wastewater Collection-Gravity Sewers and Appurtenances."

10E.5 Portland Cement Association (PCA), "Earth and Traffic Loads on Conduits," 1967.

10E.6 American Association of State Highway and Transportation Officials (AASHTO), AASHTO GDHS, "A Policy on Geometric Design of Highways and Streets."

10E.7 The Asphalt Institute, Thickness Design - Full-Depth Asphalt Pavement Structures for Highways and Streets (MS-1), Revised Eighth Edition, August 1970.

10E.8 American Railway Engineering Association (AREA), "AREA Manual for Railway Engineering."

10E.9 "Climatological Summary for the Hanford Area," (PNL-4622) prepared for the U.S. Department of Energy by Pacific Northwest Laboratory, June 1983.

10E.10 Design Guidelines for larger on-site Sewage Systems with design flows of greater than 3,500 gallons per day. State of Washington, Department of Social and Health Services and Department of Ecology, 1987.

10E.11 Guidelines for the use of pressure distribution systems. Technical review committee, Washington State Department of Social and Health Services, Office of Environmental Health Programs. September 1984.

STRUCTURAL AND CIVIL BASIS FOR DESIGN

APPENDIX 10A

SEISMIC ANALYSIS AND DESIGN

10A.1 GENERAL

This appendix provides seismic analysis and design criteria for HWVP structures, systems, and components. Hereafter, structures, systems, and components will be referred to as items.

The criteria include input definition, response determination approach, performance requirements and seismic design considerations. These criteria are based primarily on the guidelines of UCRL-15910, TM 5-809-10-1, UBC and HPS-SDC 4.1 Revision 11.

10A.2 EARTHQUAKE LOADS

This section defines input to be used in determining structural response induced by seismic ground motions. Safety Class 3 and 4 items will be designed for UBC seismic static loading. Safety Class 1 and 2 items will be designed for Design Basis Earthquake (DBE) and Operational Basis Earthquake (OBE).

10A.2.1 UBC EARTHQUAKE LOADS

When determining response for UBC earthquake, input will be the static lateral earthquake forces and their distributions as defined in Section 2312 of the UBC for Seismic Zone 2B, and parameters as modified below:

	SAFETY CLASS			
	1*	2*	3	4
Max. Horiz. Ground Accel., g	0.2	0.12	0.12	0.09
Critical Damping Percent, D	See Sec.10A.2.4		5	5
Importance Factor, I	2.0	2.0	1.25	1.00
Coefficient, C, Max.	2.75	2.75	2.75	2.75
Seismic Zone Factor, Z	0.2	0.2	0.2	0.2
Site Coefficient, S	1.2	1.2	1.2	1.2
Coefficient, R_w	See Table 10A-1			

*For Preliminary Design

10A.2.2 OPERATIONAL BASIS EARTHQUAKE (OBE) LOADS

An OBE is not required for the HWVP (non-reactor) items.

10A.2.3 DESIGN BASIS EARTHQUAKE (DBE) LOADS

The response of Safety Class 1 and 2 items to a dynamic DBE loading will be determined from an elastic dynamic analysis. Response spectra for horizontal ground motion are given on Figure 10A-1 for Safety Class 1 items and Figure 10A-2 for Safety Class 2 items (from SDC 4.1 Rev. 11). As indicated on the response spectra the peak horizontal ground accelerations are 0.20g for Safety Class 1 and 0.12g for Safety Class 2 items. For vertical motion, the design vertical response spectra shall be taken as 2/3 of the horizontal spectra over the entire range of frequencies.

Limited inelastic behavior is permissible for those items with adequate design details such that ductile response is possible or for those facilities with redundant load paths.

Therefore, for a given item, the DBE spectra corresponding to a particular inelastic-post yield damping level will be used. The damping level will be selected in accordance with Subsection 10A.2.4. Directional considerations are covered in Subsection 10A.2.5.

DBE time history records suitable for analysis or test purposes will be developed.

10A.2.4 DAMPING

For purposes of dynamic analysis including defining spectral damping values, the viscous damping coefficients will be based on UCRL-15910 and TM5-809-10-1 as follows:

Damping Values (%of Critical)

Structural System	Elastic-Linear (For OBE)	Inelastic-Post Yield (For DBE)
Equipment and Piping	2*	5
Welded Structural Steel	3	7
Prestressed Concrete	3	7
Bolted Structural Steel	5	10
Reinforced Concrete	5	10
Masonry Shear Walls	7	12
Dual Systems	Note (1)	Note (2)

* This value will be used for near-field earthquake (NFE) floor response spectra.

Note (1) The value of the primary or more rigid system should be used. If both systems are participating significantly, a weighted value proportionate to the relative participation of each system may be used.

Note (2) The value for the system with the higher damping value may be used.

For determination of DBE response spectra at damping values other than those plotted on Figures 10A-1 and 10A-2, spectra for new damping values will be determined by interpolation using appropriate scaling methods.

10A.2.5 DIRECTIONAL CONSIDERATIONS

(a) UBC Loading

Earthquake forces due to a UBC static loading will be assumed as being applied in any horizontal direction. The design earthquake forces may be assumed to act nonconcurrently in the direction of each principal horizontal axis of the structure, except as noted below. The horizontal force will be oriented so that each item will be designed for worst case (maximum) seismic response.

Items with plan irregularities as defined in 1988 UBC Section 2312(h)1 will be designed for 100 percent of the prescribed seismic forces in one horizontal direction plus 30 percent of the prescribed seismic forces in the perpendicular horizontal direction. The combination requiring the greatest component strength will be used for design. Alternately, the effects of the two horizontal directions may be combined on a square root of the sum of the squares (SRSS) basis. In this method, the contributions to a particular response from input motion in each major orthogonal direction are combined by squaring each contribution, adding the squares and taking the square root of this sum. When the SRSS method of combining directional effects is used, each term computed will be assigned the sign that will result in the most conservative result. Except for horizontal cantilevers, the contribution due to the vertical component is not combined with response from other horizontal components.

(b) DBE Loading

Safety Class 1 and 2 items subject to DBE dynamic loading will be designed for an elastic response to three orthogonal earthquake ground motion inputs (two horizontal and one vertical).

Two methods are acceptable for determining the earthquake responses in a given direction from the three earthquake components.

The first is the 100-40-40 method. In this method, the response in one direction is 100 percent of the prescribed seismic force and the other two directions each contribute 40 percent of their seismic forces. All possible combinations, including variation in sign, will be considered. For any given element, the maximum combined response will be considered based on the worst case combination of input from the three orthogonal directions.

Alternately, the forces from the three directions may be combined by the SRSS method discussed above.

10A.2.6 BURIED STRUCTURES

All massive buried or partially buried Safety Class 1 and 2 structures will be evaluated to determine the need for a soil-structure interaction (SSI) analysis. When such an analysis is deemed necessary it will be carried out using the procedures specified in Section 10A.3.

10A.2.7 FORCE ON STRUCTURE-SUPPORTED ITEMS

The total lateral earthquake force (F_p) acting on Safety Class 3 and 4 equipment, components and their anchorage to a structure will be based on the provisions of Section 2312 (g) of the UBC and applicable horizontal for factor C_p from Table 10A-2.

The earthquake force on Safety Class 1 and 2 equipment, components and their anchorage to a structure will be determined from their dynamic response to a floor (in-structure) response spectra developed for their support locations. The floor response spectra will be developed by a time history analysis of the structure being evaluated for a DBE. When SSI is required appropriate modifications will be made for the analysis. Additionally, Safety Class 1 components that require proven operability during a seismic event must be evaluated with floor response spectra developed from the small-magnitude near-field (NFE) earthquake spectra provided in Figure 10A-3.

If a time history for a DBE is not available alternate methods may be used to develop the floor response spectra. Procedures for developing a floor response spectra are given in Section 10.A.3.

10A.3 SEISMIC ANALYSIS PROCEDURES

Procedures for seismic analysis to determine earthquake loading and forces on and within structural systems and components are given in Subsections 10A.3.1 through 10A.3.8. Subsection 10A.3.1 covers requirements for UBC static analysis for all Safety Class 3 and 4 items. The remaining subsections cover the dynamic analysis of Safety Class 1 and 2 items.

For preliminary design of Safety Class 1 and 2 items the UBC static analysis procedures as modified in Section 10A.2.1 can be used. This allows trial design configurations and preliminary member sizes to be established by relatively simple analyses without conducting an extensive dynamic analysis.

10A.3.1 STATIC ANALYSIS

Design earthquake forces, including base shear, distribution of forces over the height of the structure and forces on individual structural and nonstructural items will conform to Subsections 10A.2.1 and 10A.2.4. For irregular structures, as defined in UBC Sections 2312(d)5.C and 2312(d)8, distribution of applied forces will be determined by dynamic analysis procedures specified herein, except that all forces will be scaled so that the total base shear is equal to the UBC established base shear per Subsection 10A.2.1.

Analysis to determine internal forces and system deflections for applied seismic loading on structures will be based on established structural analysis procedures. Mathematical models for manual or computer analysis will be consistent with the complexity of the physical structure represented.

10A.3.2 DYNAMIC ANALYSIS

The response of Safety Class 1 and 2 items to a dynamic DBE input will be calculated using the following procedures. These procedures are in accordance with UCRL 15910 and TM5-809-10-1. Under UCRL 15910 guidelines Safety Class 1 items are considered to be part of a High Hazard Facility and Safety Class 2 items are considered to be part of a Moderate Hazard Facility. Under TM 5-809-10-1 guidelines Safety Class 1 and 2 items are considered to be part of an Essential Facility.

Elastic Dynamic Analysis

All Safety Class 1 and 2 items will be designed to resist the OBE (Not currently applicable or anticipated for HWVP) elastic behavior. An elastic dynamic analysis will be performed to evaluate the response of the structure. Seismic forces are combined with other loads in accordance with Subsections

10.5.1, 10.5.3.1, and 10.5.3.3 to determine the total combined loading elastic demand on the structure. In the case of steel, the AISC allowable elastic stresses are then calculated and compared with the elastic demand. In the case of concrete, the ACI ultimate strengths are calculated and compared with the factored elastic demand.

Inelastic/Post-Yield Dynamic Analysis

All Safety Class 1 and 2 items will be designed to resist the DBE by post-elastic behavior with prescribed ductility limitations. An elastic dynamic analysis will be performed to evaluate the response of the structure. The resulting seismic forces for each element are reduced by the inelastic demand-capacity ratio (F_u) to obtain the inelastic seismic demand which is then combined with other loads in accordance with Subsections 10.5.1, 10.5.3.2 and 10.5.3.3 to determine the total demand for the element. The capacities of the elements are obtained from code allowables ultimate or yield values. Once the capacity of an element is computed it is compared to the total demand for that element.

For steel, the capacity is taken to be 1.7 times the AISC elastic capacity for an Allowable Stress Design or can be taken to be the plastic capacity per AISC Chapter N. For concrete the ACI ultimate strength capacities will be used. Note that strength reduction factors, ϕ, are retained.

Values for the inelastic demand-capacity ratio (F_u) are presented in Table 10A-1.

Limited inelastic behavior is permissible for those facilities with adequate ductile detailing or with redundant load paths.

Low Fundamental Period/High Fundamental Frequency

An adjustment to the low fundamental period/high fundamental frequency region of the response spectra will be evaluated in order to avoid being unconservative. For fundamental periods lower than the period at which the maximum spectral acceleration occurs, the maximum spectral acceleration will be used. For higher modes, the actual spectral accelerations at all natural periods will be used.

The basis for using the maximum spectral acceleration in the low period range is twofold: first to avoid being unconservative in using constant inelastic capacity-demand ratios, Fu, at higher frequencies; and second to account for the fact that stiff structures may not be as stiff as idealized in dynamic models.

However, if there is a high degree of confidence in the determination of the low fundamental period/high fundamental frequency, the actual spectral accelerations may be used along with values of unity for Fu, the inelastic capacity-demand ratio.

The actual spectra of all periods/frequencies will be used to evaluate nonstructural components by dynamic analysis and to develop floor response spectra used for the evaluation of structure-supported subsystems.

Nonstructural Elements

The influence of nonstructural elements on the seismic response of the lateral force resisting system will be considered in design. Special care is required to either isolate the elements or accommodate their movement.

10A.3.3 SELECTION OF ANALYSIS PROCEDURES

One of the three basic elastic dynamic analysis procedures described in Subsections 10A.3.4, 10A.3.5, and 10A.3.6, will be used. The selection of which analysis procedure to be used under specific circumstances will be based on the conditions given below:

A Simplified Dynamic Analysis (SDA) may be utilized when the dynamic response of the structure (earthquake force resisting system) is mainly in one dynamic mode for the given direction of ground motion considered, and effectively no coupling occurs between responses in each of the three ground motion input directions. In order to fulfill these criteria, it must be effectively demonstrated that at least 90% of the structure mass participates in the primary response mode for a given direction of excitation. In addition, in order to qualify for SDA, the structure must have a relatively simple framing system and be regular. (See UBC 1988, Section 2312(d)5.B)

Regardless of other factors, dynamic response of a structure may be analyzed by SDA procedures if the structure is rigid. A structure is considered to be rigid if its first mode natural period (frequency) is equal to, or less than, 0.04 sec. (25 Hz).

Structures that do not qualify for SDA, will be analyzed by Modal Spectral Analysis (MSA) or Time-History Response Analysis (TRA) methods. Nonrigid structures which are irregular must use TRA analysis. MSA is acceptable for all cases in which TRA is not required.

The above requirements are summarized in Table 10A-3.

10A.3.4 SIMPLIFIED DYNAMIC ANALYSIS PROCEDURE (SDA)

Peak dynamic force (F) on the item or structure will be determined by the following formula considering a given orthogonal direction of input motion:

$$F = 1.5\ C_1\ W$$

Where, C_1 is the peak response acceleration (in units of "g") determined from the design response spectra defining earthquake motions for the given input direction. The first or dominant mode natural period of the structure will be calculated and used to obtain the peak acceleration value from the design response spectra. W is the total weight of the structure which may participate in the structural response for the direction considered. The factor of 1.5 (Ref. 10A.3) in the force formula is provided to conservatively account for effects not otherwise included in the response. These effects include directional coupling, higher mode response and the possible unconservatisms relative to period computations.

Where the first or dominant mode of the structure has a natural frequency of 20 Hertz or more, the force (F) may be determined by using a factor of 1.2 in place of 1.5 in the above formula.

In either of the above cases, the structure may be made up of a number of masses at different locations. When this occurs, the total force, F, will be distributed proportionately at each mass location for purposes of static analysis to determine responses such as member forces, stresses, deformation or deflection.

Damping values will be selected for defining the design response spectra as specified for modal spectral analysis in Subsection 10A.3.5.

Input motions and corresponding structural response values for the structure or any component will be considered to occur nonconcurrently for each major input direction. Structural response on the structure as a whole, and on each component as determined from the procedure described herein, will not be combined with response to other input directions. Design of each component will be on a worst case basis considering each of the three orthogonal input directions and resulting response.

10A.3.5 THE MODAL SPECTRAL RESPONSE ANALYSIS PROCEDURE (MSA)

This section describes criteria for performing seismic structural response analysis by the modal spectral method. As seen from the selection rules given in Subsection 10A.3.3, Modal Spectral Analysis (MSA) is the norm or standard for determining seismic response of Safety Class 1 and 2 items. Simplified Dynamic Analysis (SDA) is an exception for determining response of relatively simple structures, and Time-History Response Analysis (TRA) is an exception for highly complex and irregular structures. TRA may also be required for floor spectra and soil-structure interaction analysis.

The general method of MSA required is described in detail in standard texts on structural dynamics; for example, see Reference 10A.1. Generally, any computer approach used will incorporate finite element methods utilizing the matrix-displacement method of structural mechanics. Fluor Daniel uses the Fluor SAP Code (based on Reference 10A.2) or for selected analyses, approved microcomputer software. In addition, for some soil structure interaction analysis and for assessing effects of embedment of structures, additional computer codes may be used.

Design response spectra representing seismic ground motions will be as described in Sections 10A.2 and 10A.3. Input for uncoupled structure-supported items to be analyzed will be developed as described in Subsection 10A.3.9. (See Paragraphs 10A.3.5.2 and 10A.3.5.3).

10A.3.5.1 Mathematical Modeling

The extent and detail of mathematical models will be consistent with obtaining realistic structural response of items to be analyzed within an engineering degree of accuracy.

Mathematical modeling of items will be conducted to the detail required to ensure obtaining the actual response and will be consistent with the method of analysis being used. For dynamic analysis, the mathematical model will be, as a minimum, a lumped-mass system interconnected by elastic elements. Modal damping may be assumed in the case of damped structural systems and/or components where the damping level does not exceed 12% of critical.

The models must adequately represent the physical characteristics of structures, systems, and components and their corresponding response to seismic excitations. Where it is difficult to model various structures, systems, and components, parametric studies are required to determine sensitivity of the model to various parameter changes; e.g.,

mass, stiffness, material properties, etc. Refining the model is then done to reflect the appropriate parameter representation as determined by the studies.

All physically connected structures, systems, and components will be represented as a combined single mathematical model unless such connected structures, systems, and components are permitted to be uncoupled according to Subsection 10A.3.5.3. When uncoupling is justified, the subdivided structures, systems, and components will be modeled in a consistent manner. When structures, systems, and components are subdivided and, as a result, become supported structures, care must be taken in providing the input motion that is representative of the seismic response of the supporting structure. Refer to Subsections 10A.3.9 and 10A.3.5.2.

For efficient modeling, geometric, mass and reflective symmetry may be utilized to reduce the number of degrees-of-freedom; however, care must be taken to ensure that significant translational and rotational degrees-of-freedom are considered at mass points. In addition, consideration must be given to the coupling effects which may occur between the translational and rotational degrees-of-freedom where the center of mass and center of resistance (for either torsional and bending effects) do not coincide.

At foundations or points of support, the rocking degrees-of-freedom should be considered in the mathematical model. Although, in some cases, such degrees-of-freedom are insignificant, care should be utilized to justify their elimination.

Discontinuities that may exist in a structure, system, or component (e.g., drastic changes in stiffness, gaps, or clearances) that become part of the mathematical model may require special consideration. It may be necessary to treat gap or clearance discontinuities as nonlinearities, and such discontinuities may be subject to impact forces. An appropriate mathematical procedure for representing the response of such gaps or clearances will be used in determining the impact forces for design purposes. In addition, at points of rapid changes in stiffness, attention should be focused on stress risers.

When modeling equipment, the mathematical model should represent the equipment in its operational mode if it must remain in operation to maintain its required function.

10A.3.5.2 Special Considerations in Modeling Supported Structures

The following special considerations are applicable to items supported by other structures rather than being directly supported on ground.

Where a supported item has two or more response frequencies that exist within the broadened resonant frequency band of the supporting point response spectrum (Subsection 10A.3.9), the spectrum may be modified in the analysis to prevent unnecessary conservatism. Since the supporting structure, system, or component can have only one resonant frequency, the broadened spectrum is modified such that its peak corresponds to one of the supported substructure, subsystem, or subcomponents frequencies within the broadened range as depicted on Figure 10A-4 (Reference 10A.3). The supported substructure, subsystem, or subcomponents is analyzed using the supporting spectrum modified as shown once for each frequency in the broadened band. For example, if three frequencies of the supported substructure, subsystem, or subcomponents were in the broadened band, there would be three analyses, and the analysis producing the largest total response would be used for the design.

For the condition where a substructure, subsystem, or subcomponents is supported by more than one supporting structure, system, or component, there will be differing response spectra at various support points. These support point spectra will be superimposed on each other, and the design spectrum for the substructure, subsystem, or subcomponents taken as the upper bound envelope of the support point spectra considered.

10A.3.5.3 Conditions for Uncoupling of Structural Models

All physically connected structures, systems, and components are coupled to some degree and should be modeled accordingly. However, for purposes of simplicity and economy, in many cases it is desirable and sufficiently accurate to separate models of structural systems into two or more individual parts. Models of structural systems may be uncoupled according to the following general guidelines.

There are two distinct types of coupling conditions:

a) where structures, systems, or components are coupled together but supported independently, the coupled point may be considered as additional support point, and

b) where the structures, systems, or components are physically coupled and physically support one or another through the coupling point, one being the primary support.

All other coupling conditions are combinations of these two types of sampling conditions.

Basically, uncoupling can be justified where the model of each subsystem or subcomponents is developed to account for interaction effects at interfaces, or where it is shown that the dynamic response of subsystems and subcomponents is independent as modeled.

Table 10A-4 provides conservative guidelines which are to be used as a basis for uncoupling models of structural systems. This table was developed on the basis of past studies which have been conducted to examine the effects of mass and stiffness relationships between various systems and their resulting interaction. (See Reference 10A.3.)

10A.3.5.4 Number and Combination of Modes

In performing dynamic analysis using modal spectral methods, sufficient modes will be included to accurately represent the response of the structure. To ensure this accurate response determination, in general, the number of natural modes included in calculating the response will be such that at least 90% of the modal mass is accounted for within the modes considered for a given orthogonal response direction.

In order to calculate the maximum of any response quantity, the responses from each normal mode will be combined using "the square root of the sum of the squares" approach (SRSS). Combine closely spaced mode groups (modes whose frequencies are within 10% of each other), by absolute value and then combine those groups by SRSS. The 10% method for combining of modes is described in additional detail in Regulatory Guide 1.92 (Reference 10A.4). Acceptable alternate methods for combining closely spaced modes are also described in Reference 10A.5.

In some cases, the SRSS method for combining modal quantities may yield unconservative results. One case in point is when several modes at relatively high frequency have significant participation. In such cases, other modal combinations which yield conservative results such as "sum of absolute values" will be used.

10A.3.5.5 Directional Response

Dynamic analysis by the MSA will be performed considering the seismic excitation in the two orthogonal horizontal axes and

the vertical axis that coincide most nearly with the principal axes of the structural model.

The method for determining the maximum earthquake response (e.g., maximum displacement, acceleration, moment or stress) for any element or at any point in any direction will be determined by combining the three earthquake components per methods described in Section 10A.2.5.

10A.3.5.6 Torsional Effects

Analytic techniques will account for the effect of horizontal torsional moments due to actual and accidental eccentricities between centers of mass and rigidity at each level.

Inclusion of accidental torsion accounts for such factors as spatial variations of horizontal input motions applied to long buildings, rotational components of ground motions, the effects of nonstructural elements or building stiffness and inertial characteristics, the actual distribution of dead and live loads, uncertainties in defining the building's material properties for dynamic analysis, and variations in foundation - soil coupling effectiveness.

To calculate the accidental torsional moment, the mass at each level will be assumed to be displaced from the calculated center of mass in each direction a distance equal to 5% of the building dimension at that level perpendicular to the direction of the force under consideration. The torsional design moment at a given story will be the moment resulting from eccentricities between applied design lateral forces at levels above that story and the center of rigidity of the vertical resisting elements in that story (i.e., actual torsion) plus an accidental torsion. The accidental torsion added at each level will be the product of the seismic acceleration and mass at the given level, multiplied by the accidental eccentricity between center of mass and center of rigidity which will be taken as 5% of the building's perpendicular dimension at that level.

Where three-dimensional models are used for analysis, effects of accidental torsion will be accounted for by appropriate adjustments in the model or by equivalent static procedures.

Where torsional irregularity exists as specified in the UBC, the effects will be accounted for by increasing the accidental torsion by an amplification factor.

Torsional moments are to be resisted by the structure's lateral force-resisting system and the resulting torsional member shear forces added to direct shear forces by standard analytical methods.

10A.3.6 TIME-HISTORY RESPONSE ANALYSIS PROCEDURE (TRA)

Except as otherwise provided herein, requirements for TRA will be the same as those for MSA as given in Subsection 10A.3.5.

TRA is only required for design or review of items having relatively complex response behavior which only can be adequately calculated in this manner. For the HWVP, such complex response behavior may result from one or more of the following characteristics of a given structure:

a) complexity of structural geometry

b) high degree of structural irregularity in geometry, load path, or eccentricity of mass and stiffness

c) significant nonlinear geometric effects due to large deformation or displacements

In addition, TRA may be required for SSI analysis or in the generation of floor spectra.

As TRA is generally costly and sensitive to various input, modeling, and material criteria, models and approaches for calculating response in this manner will be considered on the basis of parametric evaluation and engineering judgment. Models will be limited to a size consistent with determining responses of interest.

Ground motion input for TRA will be time-history ground motions for DBE or OBE as noted in Subsections 10A.2.2 and 10A.2.3. These may be modified, as required, to include SSI effects as specified in Subsection 10A.3.8. Input time histories for structure-supported items requiring TRA will be developed using TRA of the supporting structures in accordance with this Subsection.

Combining of directional components for a particular response when utilizing TRA will be accomplished as follows:

a) When orthogonal input components are statistically independent, directional components will be directly added.

b) When orthogonal input components are not independent, one of the methods specified in Subsection 10A.2.5 will be used.

10A.3.7 STABILITY REQUIREMENTS

Stability requirements for overturning and sliding are defined in Section 10A.5.

10A.3.8 ANALYSIS FOR SOIL-STRUCTURE INTERACTION

It is recommended that soil-structure-interaction (SSI) effects be considered for all embedded Safety Class 1 and 2 buildings/structures. General criteria for determining gross motion seismic response of buildings/structures are given in Subsection 10A.3.8.1. Criteria for determining effective dynamic pressure increments on below-grade walls are given in Subsection 10A.3.8.2. Per UCRL 15910 accounting for SSI is recommended but not required.

10A.3.8.1 SSI Effects on Gross Motion Response

Several steps are required in determining the effects of soil-structure interaction on the seismic response of buildings/structures.

Initially, parametric studies will be conducted to evaluate the seismic response of the site soils and to determine the level of the soil stress-strain properties for the given level of OBE/DBE input ground motion. This will be accomplished by finite element methods, utilizing the SHAKE computer code analysis (Reference 10A.6). One-dimensional models of the soil profile will be developed and equivalent linear soil properties used with an iterative procedure to obtain soil properties compatible with the strains developed in each layer.

These properties are then used in the next step to evaluate soil-structure interaction and response attenuation. This will be analyzed by finite element methods, utilizing the FLUSH computer code analysis (Reference 10A.7). Two dimensional models of the soil and structure will be developed and gross motion SSI response of the structure assessed. These results will then serve as input to the 3-D dynamic analysis of the structure.

Due to such various factors as wave scattering effects and radiation damping, the SSI results normally produce a reduction in foundation motion. This reduction in the ground level motion tends to increase with increasing mass, stiffness, foundation dimensions and embedment depth. Consequently, it is acceptable, and generally conservative, to use the OBE/DBE criteria spectra as direct input to the 3-D dynamic model of the structure as if this motion was applicable at the structure base foundation level. However, the realistic, beneficial effects of SSI should be considered when significant.

Additionally, any frequency shifting effects due to SSI will be always considered.

Uncertainty in the accurate prediction of dynamic soil properties will be accounted for by employing a parametric analyses using a range of soil dynamic shear moduli values. The range of soil dynamic shear moduli will be bounded by: a) 50% of the modulus corresponding to the best estimate of the mean large strain condition, and b) 90% of the modulus corresponding to the best estimate of the low strain condition unless better estimates of the uncertainty are available. Three soil modulus conditions are generally recommended corresponding to a) and b) above, and c) a best estimate dynamic shear modulus. Alternately, the variation in dynamic shear moduli analyzed may consist of: a) best estimate dynamic shear modulus X 1.5, b) best estimate dynamic shear modulus + 1.5, and c) best estimate shear modulus X 1.0.

Strain-dependent soil damping values will be utilized in SSI analysis.

Refer to Figures 10A-5 and 10A-6 for variations in shear moduli and damping ratios with shear strain (Reference 10A.18 and 10.1).

For structures which are significantly embedded, the effects of only half of the theoretical embedment also should be analyzed to account for possible soil-structure separation.

10A.3.8.2 Dynamic Pressures on Below-Grade Walls

In the design of below-grade walls which resist lateral earth pressures, the design will provide for a seismic increment of pressure in addition to the normally considered lateral earth pressures. Such so-called dynamic pressures are included to allow for soil-structure interaction effects which may occur.

The calculation of seismic loading on walls is based on the well-known Mononobe-Okabe formulation (References 10A.8 and 10A.9) which is further developed and explained by Kapilla (Reference 10A.10), Seed and Whitman (Reference 10A.11), and Dowrick (Reference 10A.12). Figure 10A-7 depicts the basis for determining the force due to the dynamic earth pressure, ΔP_{AE}. The formulation shown on Figure 10A-7 represents the sum of the normal static earth pressure force (P_A or P_o) and the dynamic earth pressure force (ΔP_{AE}). However, the point of application of the resultant load ($P_E = P_A$ or $P_o + \Delta P_{AE}$) must be determined from the individual components (P_A or P_o) and ΔP_{AE}. Thus, both components of earth pressure must be calculated and superimposed for design purposes.

Alternate recommendations provided for dynamic pressures by the geotechnical investigation, may be considered.

10A.3.8.3 Passive Resistance of Soil Subjected to Earthquake Loadings

The capacity of the soil to resist lateral movements of foundations during a seismic event will be based on a dynamic passive earth pressure and friction resistance between soil and footings bottom. The dynamic passive resistance (P_{PE}) of the soil can be estimated through the use of the variation of the Mononobe-Okabe formulation shown on Figure 10A-8. A safety factor of 1.5 will be used when determining the passive resistance of the soil by this method.

Alternate recommendations provided for dynamic passive pressure by the geotechnical investigation may be considered.

10A.3.9 GENERATION OF IN-STRUCTURE RESPONSE (FLOOR) SPECTRA - ISRS

Design in-structure response spectra (floor spectra) are required as input for structure-supported items such as sub-structures, equipment, or piping. Such ISRS will be developed by one of two methods: time-history or Modified Singh. Requirements for the methods are described below.

Raw ISRS developed for locations will be smoothed and peaks broadened according to procedures described in Regulatory Guide 1.122 (Reference 10A.13).

In order to limit the number of ISRS required for design or qualification of supported items, it is appropriate to envelop spectra generated from various response point locations to create design ISRS. In addition, see Subsection 10A.3.5.2.

When generating ISRS, care must be taken to include response contribution from all input directions. Combination of components will be in accordance with Subsections 10A.2.5, 10A.3.5.5, and 10A.3.6.

10A.3.9.1 Time History Generation of ISRS

This method is essentially a modal time-history response analysis with appropriate models to accurately develop time-history response at key support point locations. The analysis will follow the requirements given in Subsections 10A.3.5 and 10A.3.6. The support motions are then to be used for generation of raw spectra which are then enveloped, smoothed, and broadened to provide ISRS (or floor spectra) suitable for design purposes. The generation of raw spectra will utilize an acceptable response spectrum generation method similar to that used for generation of ground spectra; e.g., the Nigam-Jennings Method (Reference 10A.14). ISRS generation and development will meet the general requirements of the Regulatory Guide 1.122 (Reference 10A.13).

10A.3.9.2 Generation of ISRS by the Modified Singh Approach

The Singh approach has been modified and further developed for user convenience and cost-effectiveness. (See Reference 10A.15.) In this method, ISRS are generated directly from design spectra which provide input criteria for supporting structures. Required enveloping, smoothing and broadening must conform to criteria of the Regulatory Guide 1.122 (Reference 10A.13).

When utilizing the Modified Singh Approach, one spectra at each level will be calculated utilizing both time history and the Modified Singh Methods. Comparison of the raw spectra will be made to provide assurance that all aspects of the Singh analysis have been properly carried out.

10A.3.9.3 Approximate Method for Generation of ISRS

A method for approximating a design floor response spectrum is presented in Chapter 6 of TM 5-809-10-1.

10A.4 SEISMIC QUALIFICATION OF EQUIPMENT

Criteria for seismic qualification of equipment will be developed to meet the design and QA requirements.

10A.5 SEISMIC DESIGN AND PERFORMANCE REQUIREMENTS

This section covers special design and performance requirements for Safety Class 1 and 2 items. Requirements applicable to Non-Safety Class 1 or 2 structures are those specified in the UBC, ACI and AISC codes and elsewhere in this design basis.

All primary lateral force resisting systems for Safety Class 1 and 2 buildings and structures will be either structural steel or reinforced concrete.

10A.5.1 STEEL DESIGN

Primary lateral force resisting systems of steel for buildings and structures, including piping and other utility support systems, will either be braced frames or moment resisting frames.
Steel members and connections will be proportioned and designed in accordance with UBC Section 2722 seismic zone 2 provisions.

10A.5.2 CONCRETE DESIGN

Primary lateral force resisting systems of reinforced concrete will be shear walls and diaphragms designed and detailed according to ACI 318 Chapter 21 as specified for zone of moderate seismic risk and UBC Sec. 2625 seismic zone 2 provisions.

10A.5.3 OTHER STRUCTURAL MATERIALS

Structural systems to enclose or support equipment or nonstructural items may be of materials other than structural steel or reinforced concrete, as appropriate. In this case, allowable stresses will be based on conservative interpretation of codes and standards applicable to the material considered.

10A.5.4 STIFFNESS AND DEFLECTION REQUIREMENTS

Horizontal lateral force resisting systems including girders, trusses, and diaphragms will be of relatively rigid construction. Where the rigidity of such elements is in question, the element rigidity or flexibility will be included in the lateral force analysis so as to be considered in the design.

Major lateral force resisting systems will have lateral deflections or drift of a story relative to its adjacent stories not to exceed 0.005 times the story height for UBC or OBE loading, and 0.010 times the story height for dynamic DBE loading.

10A.5.5 EQUIPMENT ANCHORAGE

All equipment and nonstructural components will be designed to be supported, connected, and anchored to resist corresponding seismic forces. Details or specific anchorage forces will be provided for satisfactory seismic force design where off-the-shelf or manufacturer-designed items are to be furnished by contractors or suppliers.

10A.5.6 STABILITY REQUIREMENTS

All items will be designed to resist the overturning and sliding effects caused by earthquake loads. Items will be positively anchored to supporting structures or foundations. UBC Section 2311(f) for overturning due to seismic will be satisfied with additional provisions as follows:

At the interface of major structure foundations with soil, stability ratio for overturning and sliding will be 1.0 for DBE loads and 1.5 for OBE and UBC earthquake loads. The stability ratio for overturning is the ratio of the dead load resisting moment and the earthquake induced overturning moment. The sliding stability ratio is the ratio of applicable resisting forces (e.g., frictional and passive earth loads) and the maximum horizontal earthquake forces applied to the structure in a given direction at the foundation soil interface.

TABLE 10A-1

CODE REDUCTION COEFFICIENTS, R_w AND INELASTIC DEMAND CAPACITY RATIOS, F_u[1]
(Reference: UCRL-15910 Table 4.7)

Structural System	R_w	Safety Class 1 F_u	Safety Class 2 F_u
Moment-Resisting Frame Systems			
Columns[4]	*[2]	1.2	1.5
Beams			
Steel Special Moment-Resisting Space Frame (SMRSF)	12	2.5	3.0
Concrete SMRSF	12	2.2	2.7
Concrete Intermediate Moment-Resisting Space Frame (IMRSF)	7	1.2	1.5
Steel Ordinary Moment-Resisting Space Frame	6	1.2	1.5
Concrete Ordinary Moment-Resisting Space Frame	5	1.0	1.2
Connections	*[2]	1.0	1.0
Shear Walls			
Concrete Bearing Walls	6	1.4	1.7
Concrete NonBearing Walls	8	1.4	1.7
Masonry Bearing Walls	6	1.4	1.7
Masonry NonBearing Walls	8	1.4	1.7
Plywood Bearing Walls[3]	8	1.4	1.7
Plywood NonBearing Walls[3]	9	2.0	2.5
Dual System, Concrete with SMRSF	12	2.0	2.5
Dual System, Concrete with Concrete IMRSF	9	1.7	2.0
Dual System, Masonry with SMRSF	8	1.2	1.5
Dual System, Masonry with Concrete IMRSF	7	1.1	1.4
Steel Eccentric Braced Frames (EBF)			
Columns[4]	*[2]	1.2	1.5
Beams and Diagonal Braces[5]	10	2.2	2.7
Beams and Diagonal Braces[5], Dual System with Steel SMRSF	12	2.5	3.0
Concentric Braced Frames (Bracing Carries Gravity Loads)			
Steel Beams	6	1.7	2.0
Steel Diagonal Braces	6	1.4	1.7
Steel Columns[4]	6	1.2	1.5
Connections of Steel Members	6	1.0	1.0
Concrete Beams	4	1.4	1.7
Concrete Diagonal Braces	4	1.2	1.5
Concrete Columns[4]	4	1.2	1.5
Connections of Concrete Members	4	1.0	1.0

Notes:
(1) Values herein assume good seismic detailing practice and reasonably uniform inelastic behavior. Otherwise, lower values should be used.
(2) Use conservative appropriate values from analogous systems and materials above.
(3) Timber construction not to be used for Safety Class 1 and 2 systems.
(4) F_u is applicable only to the Tensile or flexural components of column loading.
(5) F_u for Chevron, vee, and K bracing is 1.2 for Safety Class 1 structures and 1.5 for Safety Class 2 structures.
(6) Reference: UBC-1988 Table No. 23Q

TABLE 10A-1

CODE REDUCTION COEFFICIENTS, R_w AND INELASTIC DEMAND CAPACITY RATIOS, F_u[1]
(Continued)

Structural System	R_w	Safety Class 1 F_u	Safety Class 2 F_u
Concentric Braced Frames (Bracing Carries Gravity Loads)			
Wood Trusses[3]	4	1.4	1.7
Wood Columns[3][4]	4	1.2	1.5
Connections in Wood[3] (other than nails)	4	1.0	1.0
Concentric Braced Frames (Bracing Carries No Gravity Loads)			
Steel Beams	8	1.7	2.0
Steel Diagonal Braces[5]	8	1.4	1.7
Steel Columns[4]	8	1.4	1.7
Connections of Steel Members	8	1.0	1.0
Concrete Beams	8	1.4	1.7
Concrete Diagonal Braces	8	1.2	1.5
Concrete Columns[4]	8	1.2	1.5
Connections of Concrete Members	8	1.0	1.0
Wood Trusses[3]	8	1.4	1.7
Wood Columns[3][4]	8	1.2	1.5
Connections in Wood[3] (other than nails)	8	1.0	1.0
Beams and Diagonal Braces[5], Dual Systems			
Steel with Steel SMRSF	10	2.2	2.7
Concrete with Concrete SMRSF	9	1.7	2.0
Concrete with Concrete IMRSF	6	1.1	1.4
Nonbuilding Structures[6]			
Tanks, vessels or pressurized spheres on braced or unbraced legs	3	*[2]	*[2]
Cast-in-place concrete silos and chimneys having walls continuous to the foundation	5	*	*
Distributed mass cantilever structures such as: stacks, chimneys, silos and skirt-supported vertical vessels	4	*	*
Trussed towers (freestanding or guyed), guyed stacks and chimneys	4	*	*
Inverted pendulum-type structures	3	*	*
Cooling towers	5	*	*
Bins and hoppers on braced or unbraced legs	4	*	*
Storage racks	5	*	*
Signs and billboards	5	*	*
All other self-supporting structures not otherwise covered	4	*	*

Notes:
(1) Values herein assume good seismic detailing practice and reasonably uniform inelastic behavior. Otherwise, lower values should be used.
(2) Use conservative appropriate values from analogous systems and materials above.
(3) Timber construction not to be used for Safety Class 1 and 2 systems.
(4) F_u is applicable only to the tensile or flexural components of column loading.
(5) F_u for Chevron, vee, and K bracing is 1.2 for Safety Class 1 structures and 1.5 for Safety Class 2 structures.
(6) Reference: UBC-1988 Table No. 23Q

TABLE NO. 10A-2

HORIZONTAL FORCE FACTOR Cp
Applicable to Rigid Items(1)
(Reference: UBC 1988 Table No. 23P)

ELEMENTS OF STRUCTURES AND NONSTRUCTURAL COMPONENTS	VALUE OF Cp
I. PART OF PORTION OF STRUCTURE	
1. Walls, including the following:	
a. Unbraced (cantilevered) parapets	2.0
b. Other exterior walls above the ground floor	0.75
c. All interior bearing and nonbearing walls and partitions	0.75
d. Masonry or concrete fences over six feet high	0.75
2. Penthouse (except where framed by an extension of the building frame)	0.75
3. Connections for prefabricated structural elements other than walls, with force applied at center of gravity	0.75
4. Diaphragms (see 1988 UBC, Section 2312(h)2)	--
II. NONSTRUCTURAL COMPONENTS	
1. Exterior and interior ornamentations and appendages	2.0
2. Chimneys, stacks, trussed towers, and tanks on legs	
a. Supported on, or projecting as an unbraced cantilever above the roof, more than one-half its total height	2.0
b. All others, including those supported below the roof with unbraced projection above the roof less than one-half its height, or braced or guyed to the structural frame at or above its center of mass	0.75
3. Signs and billboards	2.0
4. Mechanical, plumbing and electrical equipment and machinery and associated piping	0.75
5. Tanks and vessels (plus contents), including support systems and anchorage	0.75
6. Storage racks (include contents)	0.75
7. Anchorage for permanent floor-supported cabinets and bookstacks more than five feet in height (includes contents)	0.75
8. Anchorage for suspended ceilings and light fixtures	0.75
9. Access floor systems	0.75

Note:
(1) See UBC Sec. 2312(g)2 for definition of "rigid."

TABLE 10A-3

SELECTION OF DYNAMIC ANALYSIS PROCEDURE

DYNAMIC ANALYSIS PROCEDURE	PROCEDURE SELECTION REQUIREMENTS FOR ANALYSIS IN PARTICULAR RESPONSE DIRECTION
SIMPLIFIED DYNAMIC ANALYSIS (SDA)*	May be used if the structure is rigid (i.e., Tn ≤.04 sec) or if the structure meets the following: 1. Structural framing system must be relatively simple. 2. Structure must be regular (see 1988 UBC Section 2312(d)5.B). 3. At least 90% of mass must participate in the dynamic response mode considered. 4. No significant coupling between response in the three orthogonal input directions occurs.
MODAL SPECTRAL DYNAMIC ANALYSIS (MSA)	Must be used if structure does not qualify for SDA and a TRA is not performed.
TIME-HISTORY RESPONSE ANALYSIS (TRA)	May be used if structure does not qualify for SDA. Must be used if structure is nonrigid and irregular.

*SDA is applicable in all cases where the structure is rigid and, in this case, the four requirements tabulated are waived. (See text for definition.)

TABLE 10A-4

GUIDELINES FOR UNCOUPLING[1]

CASE NO.	f_e/f_s[2]	M_e/M_s[3]	SUPPORT[4] CONDITION
1A	≤0.5	≤0.20	U
2A	0.5 to 2.0	<0.001[5]	U
3A	≥2.0	≥0.20	U
1B	<0.5	>0.20	C
2B	0.5 to 2.0	>0.001	C
3B	≥2.0	>0.20	C

NOTES:

(1) Based on References 10A.3, 10A.16 and 10A.17.

(2) f_e and f_s = natural frequencies of significant modes of the supported and supporting items, respectively. f_e is the particular significant modal frequency which is closest in value to f_s.

(3) M_e and M_s = total mass of the supported and supporting items, respectively.

(4) Modeling Condition U (Uncoupled):

Supporting Role - Model as uncoupled, neglecting effects to supporting item, but including mass of supported item.

Supported Role - Model as uncoupled, using as input at support points the dynamic response calculated for supporting item.

Modeling Condition C (Coupled):

Model as coupled (total) system or use acceptable procedure to account for interaction effects.

(5) Mass of supported item may be neglected.

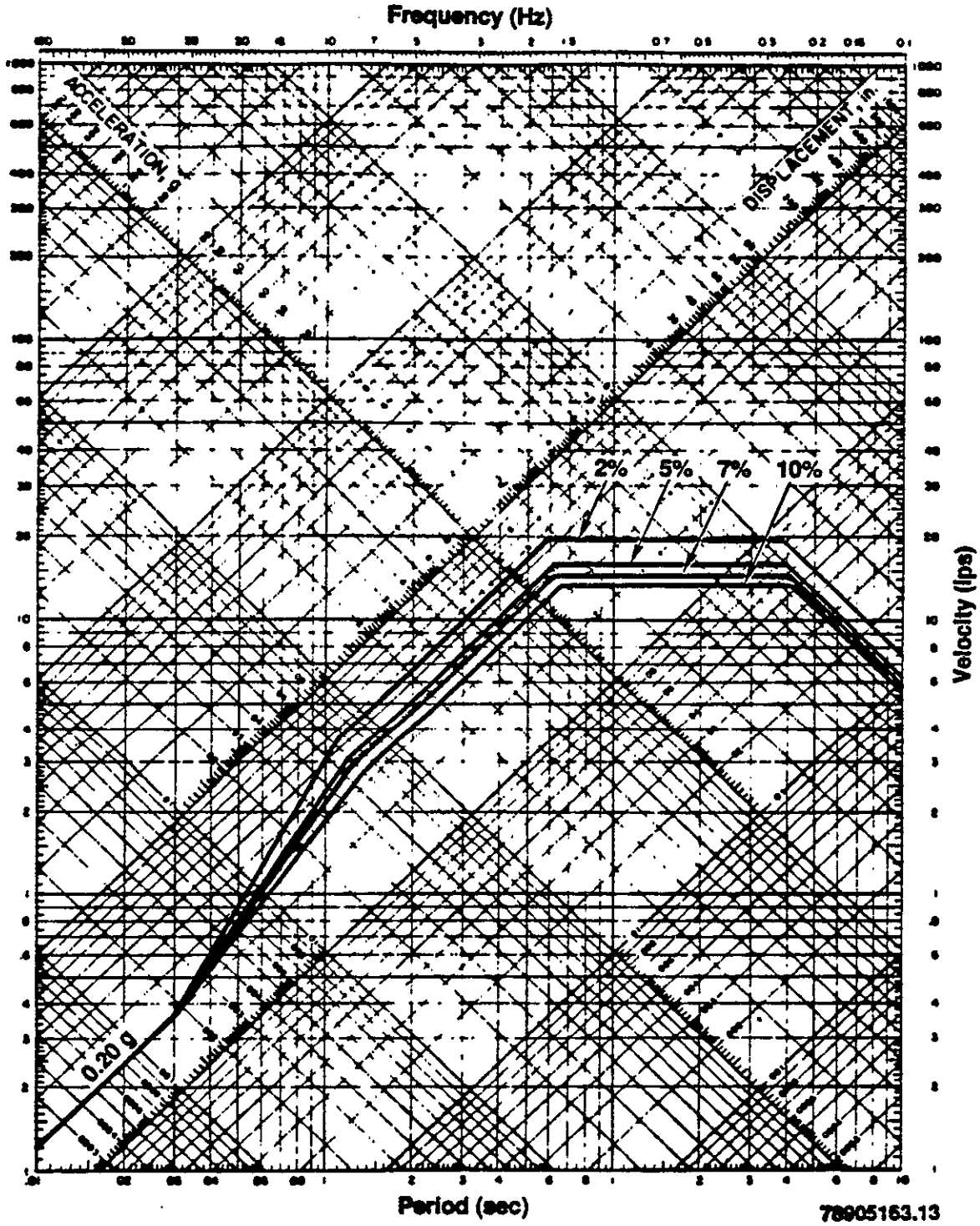

FIGURE 10A-1
DBE RESPONSE SPECTRA FOR SAFETY CLASS 1 ITEMS
(Reference Fig. 3, SDC 4.1, Rev. 11)

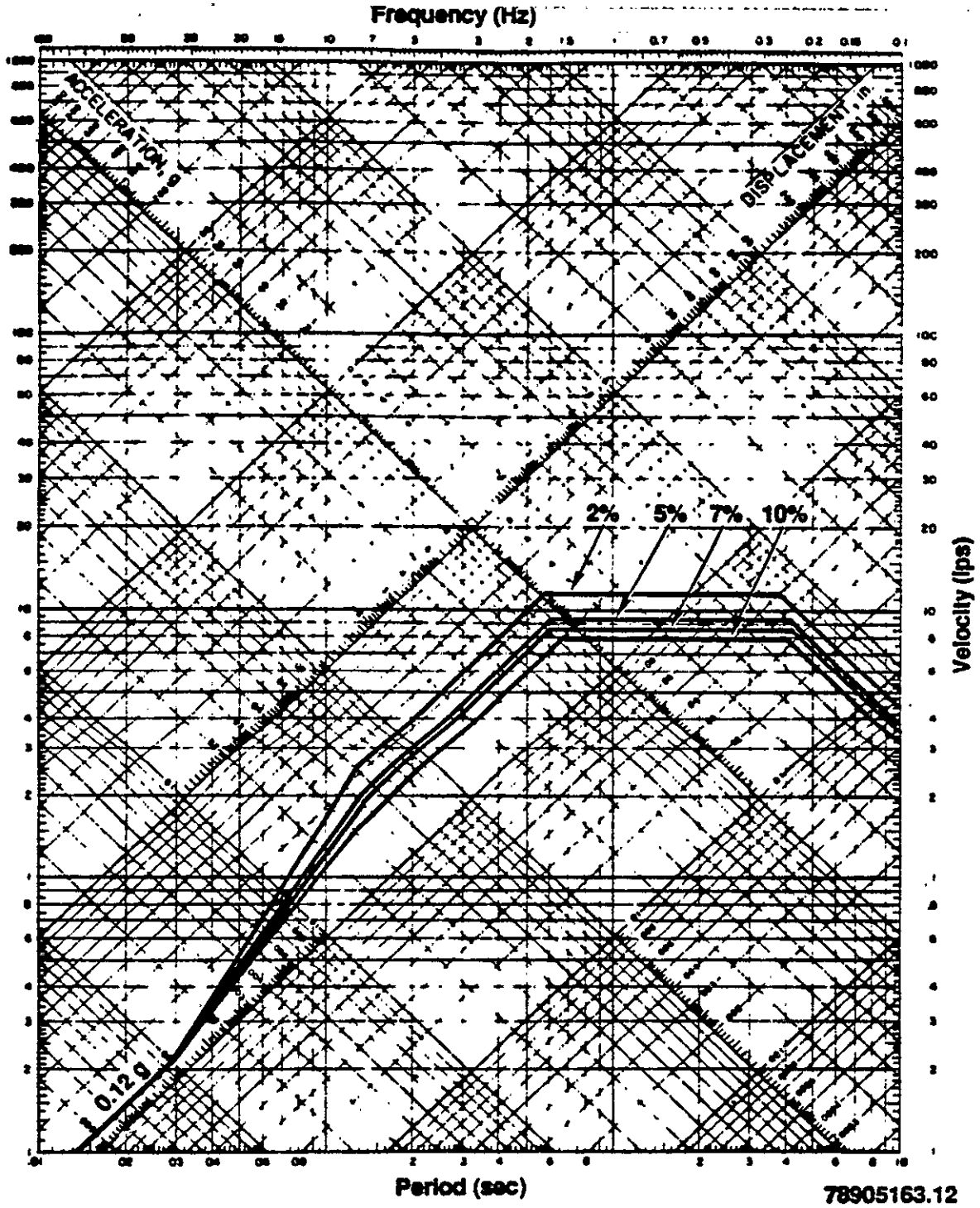

FIGURE 10A-2
DBE RESPONSE SPECTRA FOR SAFETY CLASS 2 ITEMS
(Reference Fig. 5, SDC 4.1 Rev. 11)

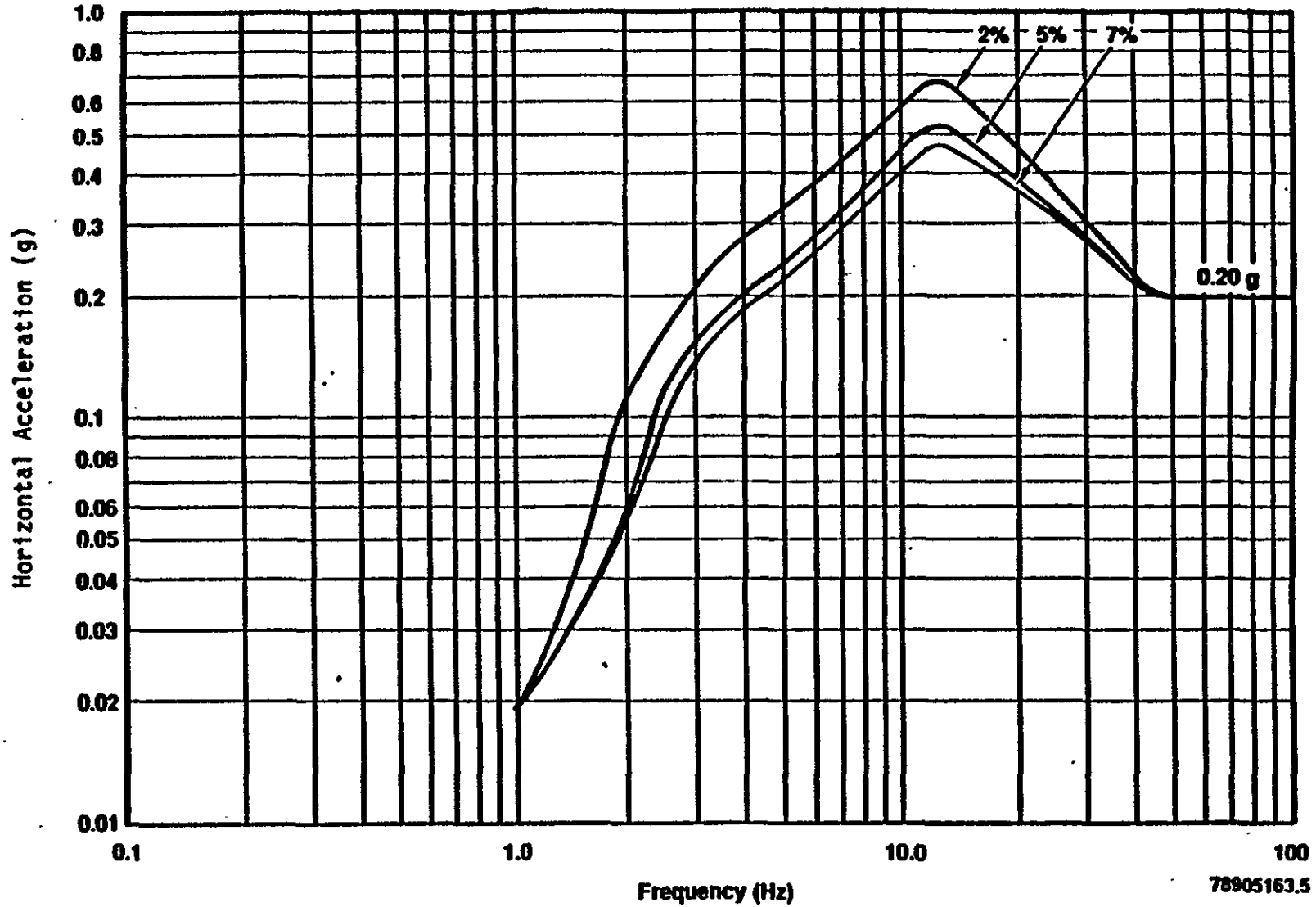

FIGURE 10A-3
RESPONSE SPECTRA FOR SMALL MAGNITUDE
NEAR-FIELD EARTHQUAKE
(Reference Fig. 4c, SDC 4.1 Rev. 11)

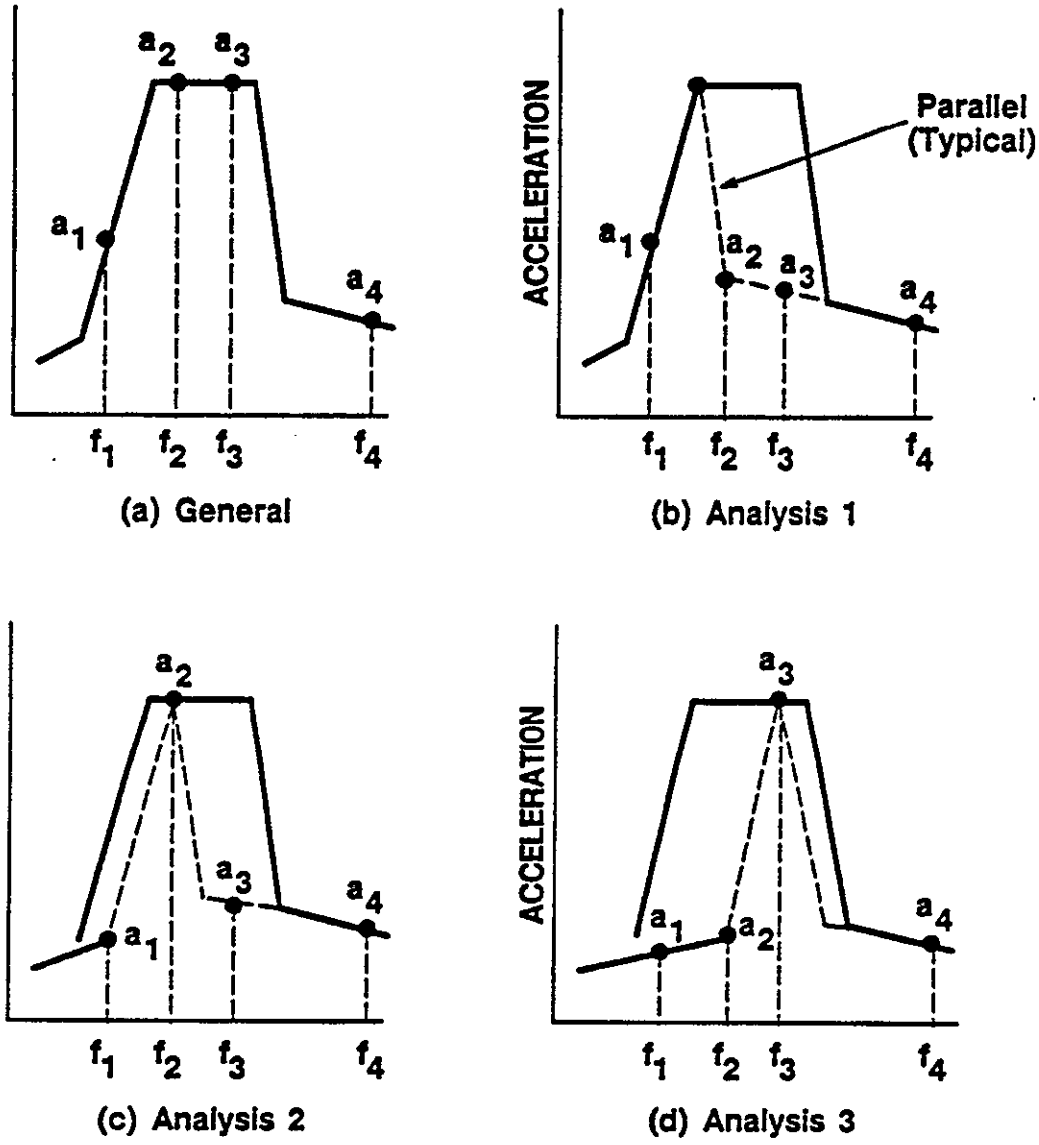

FIGURE 10A-4
USE OF IN STRUCTURE RESPONSE SPECTRA

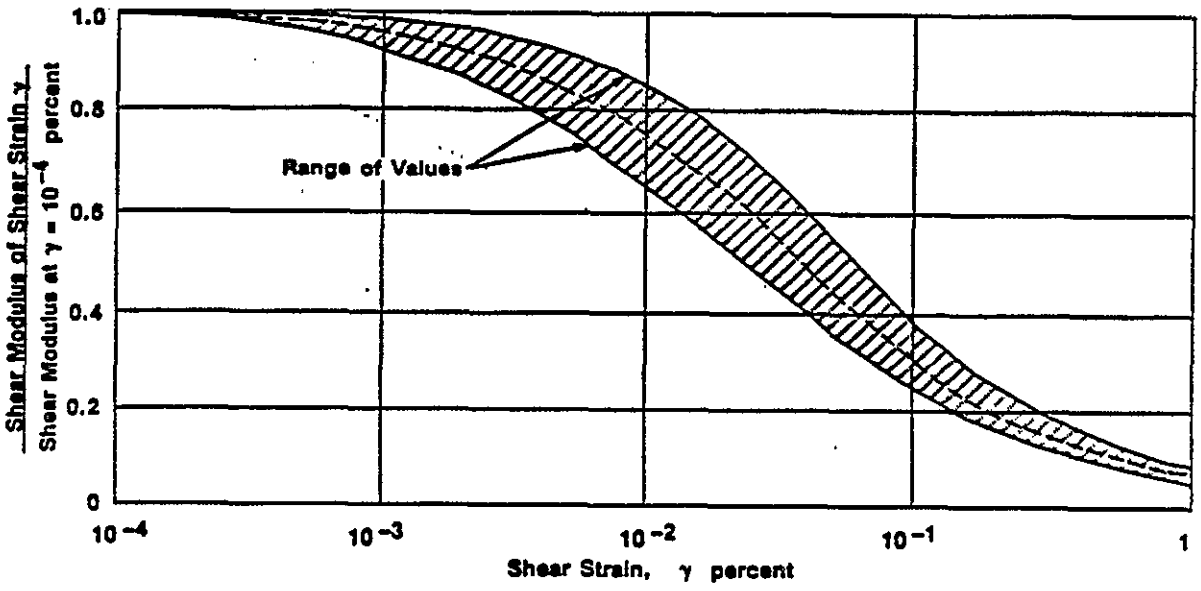

(a) Sand

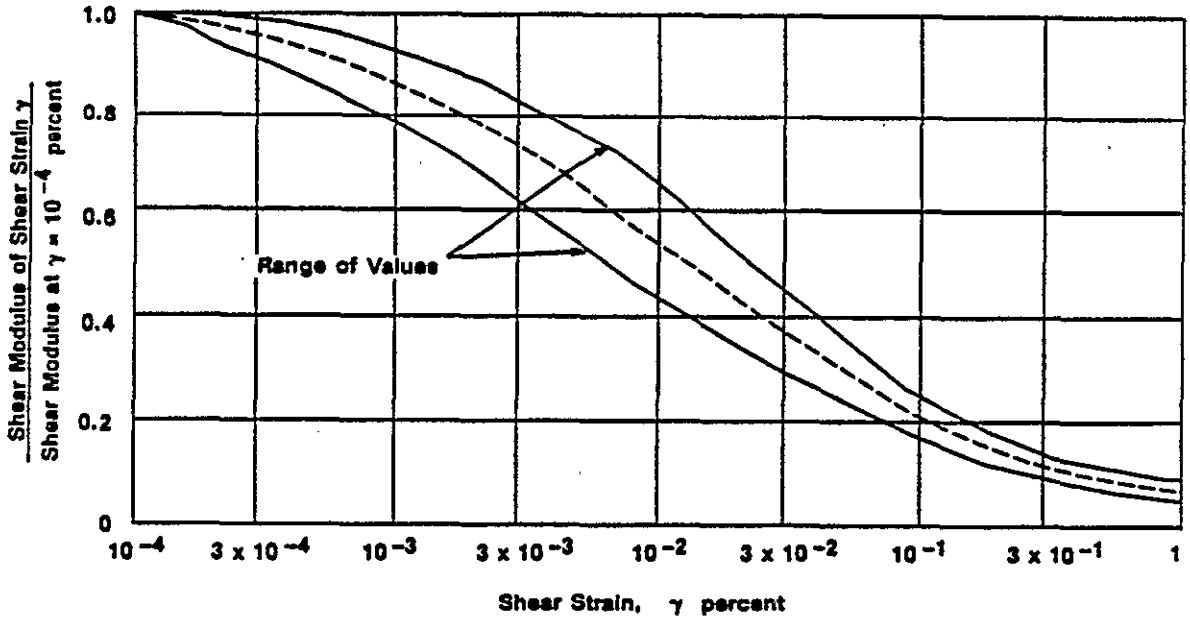

(b) Gravelly Soils

FIGURE 10A-5
VARIATION OF SHEAR MODULUS WITH SHEAR STRAIN FOR SANDS AND GRAVELLY SOILS
(Reference 10A.18 & 10.1)

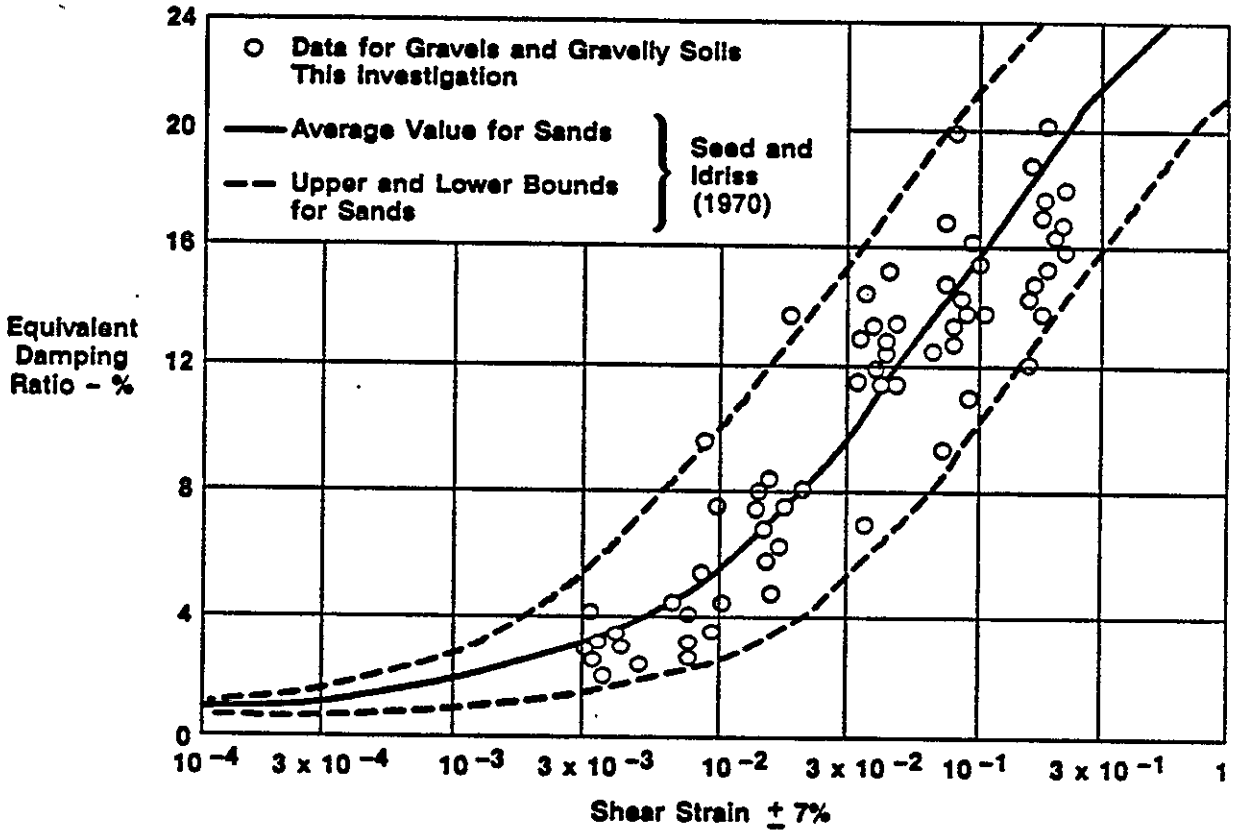

FIGURE 10A-6
VARIATION OF DAMPING RATIOS WITH SHEAR STRAIN
FOR SANDS AND GRAVELLY SOILS
(Reference 10A.18 & 10.1)

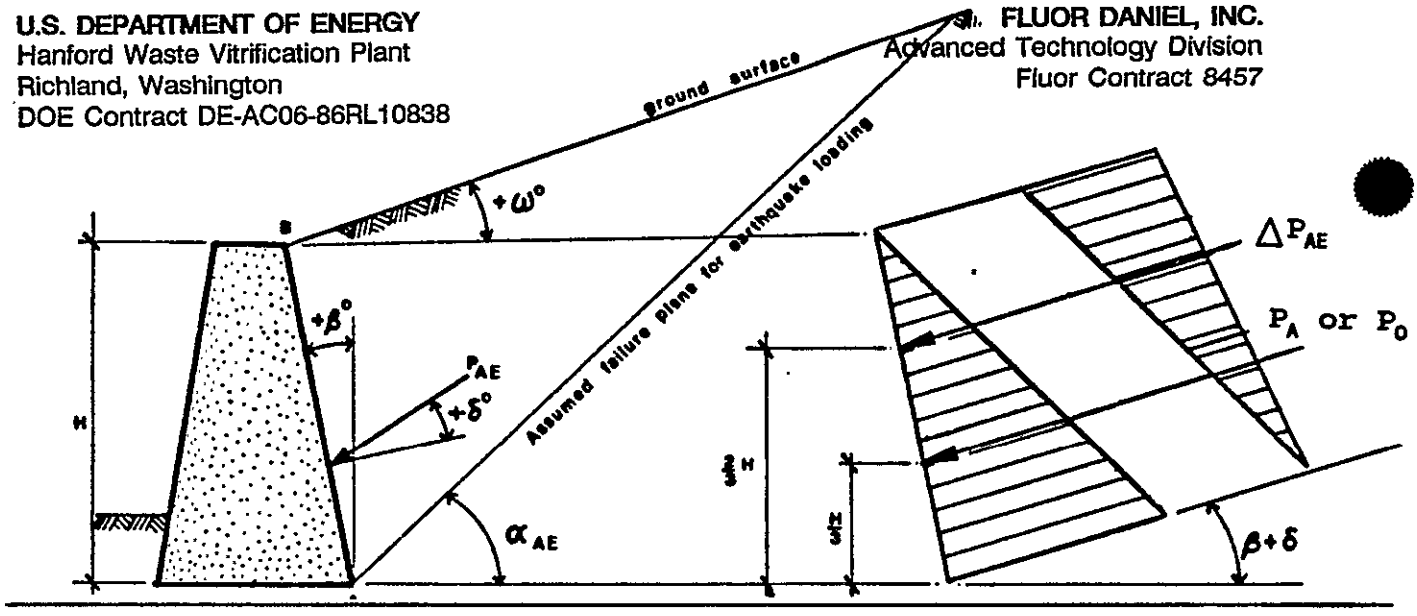

Pressures due to dry cohesionless soil on a retaining wall during an earthquake. For use with Mononobe-Okabe equations.

$$P_E = (P_A \text{ or } P_O) + \Delta P_{AE} \quad \text{..... (total earth pressure force)}$$

where: $(P_A \text{ or } P_O) = 1/2\delta_d H^2 (K_a \text{ or } K_o)$ (force due to static earth pressure) applied at 1/3 H above base of wall

$$\Delta P_{AE} = 1/2\delta_d H^2 \Delta K_{AE} \quad \text{..... (force due to dynamic earth pressure)}$$

applied at 2/3 H above base of wall

and: $\Delta K_{AE} = (1-a_v)K_{AE} - K_a$

For general conditions: (Coulomb theory)

$$K_{AE} = \frac{\cos^2(\phi-\beta-\Theta)}{\cos\Theta\cos^2\beta\cos(\delta+\beta+\Theta)\left[1+\left[\frac{\sin(\phi+\delta)\sin(\phi-w-\Theta)}{\cos(\delta+\beta+\Theta)\cos(\beta-w)}\right]^{1/2}\right]^2}$$

For usual design conditions: ($w=\beta=0$ and $\delta=0$)

$$K_{AE} = \frac{\cos^2(\phi-\Theta)}{\cos^2\Theta\left[1+\left[\frac{\sin\phi\sin(\phi-\Theta)}{\cos\Theta}\right]^{1/2}\right]^2}$$

where: $\Theta = \arctan\alpha$
α = the lateral seismic coefficient = $[a_h/(1-a_v)]$
ϕ = internal friction angle
δ_d = unit weight of dry soil
β = the angle of wall from vertical (usually zero)
w = the slope of the backfill (usually zero)
δ = the angle of wall friction (conservatively zero)
a_h = horizontal seismic coefficient
a_v = vertical seismic coefficient (may be pos. or neg.)
α_{AE} = slope angle of failure plane in an earthquake

For appropriate values of K_o and K_a refer to TABLE 10-3 .

FIGURE 10A-7
BASIS FOR SEISMIC EARTH PRESSURES

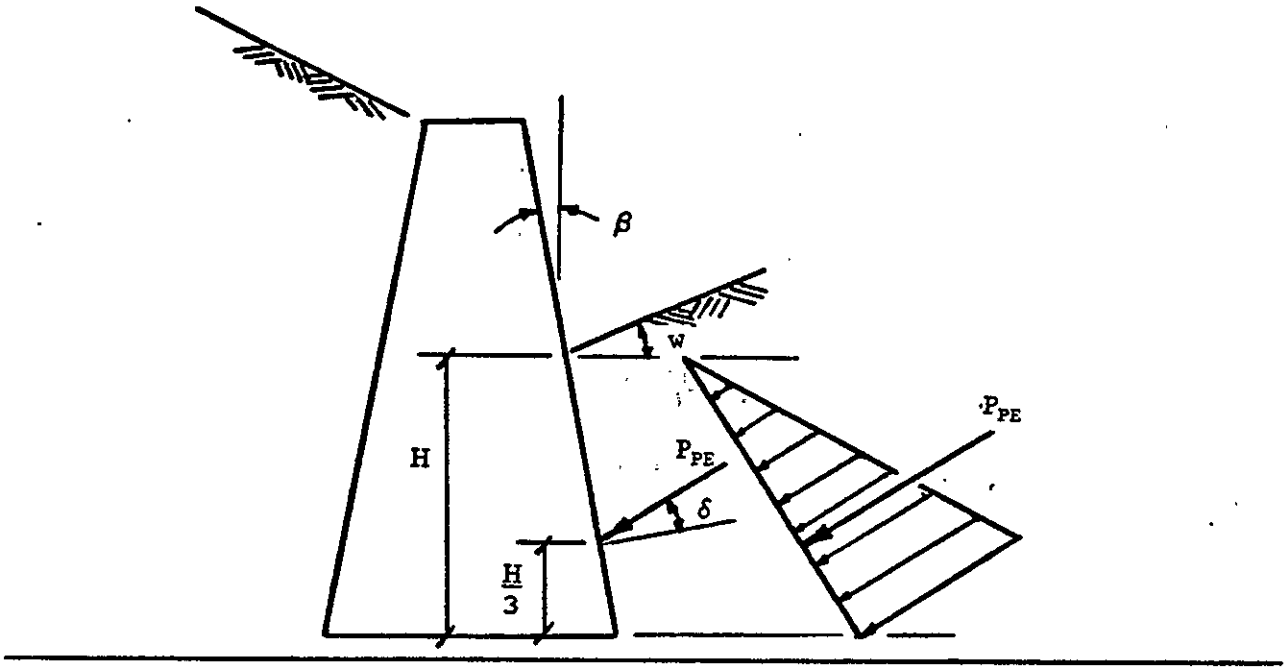

Passive resistance to dynamic lateral loads

$$P_{PE} = 1/2\delta_d H^2(1-a_v)K_{PE}$$

For general conditions: (Coulomb theory)

$$K_{PE} = \frac{\cos^2(\phi+\beta-\Theta)}{\cos\Theta\cos^2\beta\cos(\delta-\beta+\Theta)\left[1-\left[\frac{\sin(\phi+\delta)\sin(\phi+w-\Theta)}{\cos(\delta-\beta+\Theta)\cos(\beta-w)}\right]^{1/2}\right]^2}$$

For usual design conditions: ($w=\beta=0$ and $\delta=0$)

$$K_{PE} = \frac{\cos^2(\phi-\Theta)}{\cos^2\Theta\left[1-\left[\frac{\sin\phi\sin(\phi-\Theta)}{\cos\Theta}\right]^{1/2}\right]^2}$$

Note: Variables are defined in FIGURE 10A-7

FIGURE 10A-8
BASIS FOR PASSIVE RESISTANCE TO DYNAMIC LOADS

THIS PAGE INTENTIONALLY
LEFT BLANK

STRUCTURAL AND CIVIL BASIS FOR DESIGN

APPENDIX 10B

DESIGN BASIS WIND

10B.1 GENERAL

This appendix provides criteria and procedures for the design of structures and components for extreme winds and wind generated missiles. Methods for determining wind loading, calculating structural response, performance requirements, and design considerations are covered. The criteria apply to Safety Class 1 and 2 buildings as a whole and to all of their exposed external components including walls, roofs, doors, and supporting structural systems and elements. The design for wind generated missiles shall be in accordance with the provisions of ACI 349 Appendix C.

Tables and Figures at the end of this appendix summarize the parameters required for design of structures to resist wind pressure and missile impact forces. Specific theory and related formulas used to generate these tables are located within the body of this appendix.

10B.2 DESIGN CRITERIA

10B.2.1 Design Parameters

The Design Basis Wind (DBW) and the missile parameters for design are given in Table 10B-1.

10B.2.2 Design Pressure

Design pressure shall be applied to the building as a whole, to a portion as applicable because of partial envelopment, and to external elements. The design pressure p to be used in determination of wind loads for buildings is given by:

$$p = q_z G_z C_p, \text{ psf}$$

where:

q_z = velocity pressure at height z above ground, psf

C_p = external pressure coefficient

G_z = gust response factor at height z above ground for ANSI exposure C

C_p and G_z are determined by procedures specified in ANSI A58.1 Section 6 and as modified by UCRL-15910 and HPS-SDC-4.1 Rev. 11 herein. C_p differs for the building as a whole, for local central elements and for local edge elements. The value of q_z is calculated from the following relation:

$$q_z = 0.00256\ K_z(IV)^2,\ \text{psf}$$

where:

K_z = velocity pressure exposure coefficient (ANSI Table 6)

I = importance factor, Table 10B-1

V = basic wind speed, Table 10B-1

The total wind pressure varies according to height. A distinction is made between overall and local effects, and between the main structure and components according to the ANSI provisions. When buildings are considered to be airtight, no wind-induced internal pressures are applied.

10B.3 RESPONSE TO PRESSURE

Wind pressures are assumed to be statically applied. For a building as a whole or for major structural systems including frames and shear walls, a computer analysis may be used to determine structural response (forces and deflections). For local elements, manual calculations may be used.

10B.4 DESIGN FOR WIND-GENERATED MISSILES

10B.4.1 General

The two types of effects which must be considered in designing against missile impact are the local effects and the overall structural response effects.

The application of this Section is intended for concrete targets. However, Sections 10B.4.3.4 and 10B.4.3.6 are also applicable to all types of targets for overall response. Steel targets, when used, can be evaluated using equations and methods described in Chapter 6 of References 10B.1 for local effects. Although for wood missiles of Table 10B-1 the required steel plate thickness for single and double layer cases is given in Table 10B-2.

It is assumed that no point of Safety Class 1 or 2 building can be struck twice by a missile during a DBW event.

10B.4.2 Local Effects

10B.4.2.1 Definitions

Penetration - The displacement of a missile into the target

Perforation - The displacement of a missile through the target, with or without missile exit velocity. Perforation of Safety Class 1 and 2 facilities is not permitted.

Spalling - The ejection of target material from the front face.

Scabbing - The peeling-off of target material from the back face. Scabbing of Safety Class 1 and 2 facilities is not permitted.

10B.4.2.2 Relative Hardness

Missile penetration formulas are dependent on the relative hardness of a missile and target. A missile is hard relative to a concrete target (i.e., missile penetrates target) if $\sigma_m > \sigma_t$, and soft (i.e., no penetration) if $\sigma_m \leq \sigma_t$.

Where:

σ_m = Average crushing or buckling limit stress of the missile based on net contact area of the missile.

σ_t = Average contact stress required to cause local crushing and penetration of the target, set equal to $2f'_c$.

For reinforced concrete targets, σ_t is set equal to the bearing stress given in ACI 349, Section 10.15 ($\phi = 1$) increased by the dynamic increase factor of 1.25 given in ACI 349, Section C.2. This results in a value of σ_t slightly greater than $2f'_c$. For purposes of design, $\sigma_t = 2f'_c$.

Table 10B-1 identifies relative hardness of the criteria missile.

10B.4.2.3 Thickness for Hard Missiles

The concrete thickness required to resist hard missile shall be at least 1.2 times the scabbing thickness, t_s.

For missiles which are determined to be hard relative to a reinforced concrete target, the following formulas are used to determine the missile depth of penetration (x) and thence scabbing thickness (t_s).

The penetration depth (x) is obtained by the Modified National Defense Research Committee (NDRC) Formula given in Reference 10B.1, Chapter 6 as:

$$x = \sqrt{4KNWd\left(\frac{v_o}{1000d}\right)^{1.80}}, \text{ for } \frac{x}{d} \leq 2.0$$

or,

$$x = \left[\left[KNW\left(\frac{v_o}{1000d}\right)^{1.80}\right] + d\right], \text{ for } \frac{x}{d} > 2.0$$

Where:

N = missile shape factor, Table 10B-1.

d = $\left(\frac{4A_c}{\pi}\right)^{1/2}$, effective missile diameter, in.

W = missile weight, lbs.

K = $\frac{180}{\sqrt{f_c'}}$, concrete penetrability factor

f_c' = specified strength of concrete, psi

A_c = missile contact area, sq. in.

x = missile penetration depth, in.

v_o = striking velocity of missile, fps

The scabbing thickness (t_s) is computed from the following formula:

$$\frac{t_s}{d} = 2.12 + 1.36\left(\frac{x}{d}\right), \text{ for } 0.65 \leq \frac{x}{d} \leq 11.75$$

or,

$$\frac{t_s}{d} = 7.91\left(\frac{x}{d}\right) - 5.06\left(\frac{x}{d}\right)^2, \text{ for } \frac{x}{d} \leq 0.65$$

10B.4.2.4 Thickness for Soft Missiles

Soft missiles will cause no local penetration with the exception of possible punching shear. However, if it can be demonstrated by applicable formulas or pertinent test data that concrete thickness is at least 20 percent greater than that required to prevent perforation and punching shear failure, design to prevent punching shear failure is not required. See ACI 349, Appendix C.

Concrete thickness required, by formula, to prevent perforation from wood plank missile can be determined as follows:

Assume wood plank is a nondeformable (hard) missile. Use Section 10B.4.2.3 to compute the penetration depth. Compute perforation thickness t_e using the following equation:

$$t_e = \left[1.32 + 1.24\left(\frac{x}{d}\right)\right] d, \text{ for } 1.35 \le \frac{x}{d} \le 13.5$$

or,

$$t_e = \left[3.19\left(\frac{x}{d}\right) - 0.718\left(\frac{x}{d}\right)^2\right] d, \text{ for } \frac{x}{d} \le 1.35$$

The required thickness to prevent perforation is equal to $1.2t_e$. Use this thickness as a minimum to prevent punching shear failure for the soft wood plank missile. See Table 10B-2.

Otherwise, design for punching shear failure shall be based on the punching shear load equal to the smaller of:

$V_p = 1.625\ F_1$ (See Table 10B-3 and Section 10B.4.3.3)

or

$V_p = W_m$ (See Sections 10B.4.3.3 and 10B.4.3.4)

$$d = \text{the smaller of } \frac{0.2674V_p}{\sqrt{f'_c}\ b_o}, \text{ or } \frac{1.07V_p}{(2+4/\beta_c)\sqrt{f'_c}\ b_o}$$

$t = d+c$

where:

β_c	=	Ratio of long side to short side of the concentrated load
d	=	Effective depth of section, inches
f'_c	=	Specified strength of concrete, psi
V_p	=	Punching shear load, pounds
b_o	=	Perimeter of critical section, inches
c	=	Reinforcement concrete cover, inches
t	=	Concrete barrier thickness, inches

Note: Equation for d is based on a dynamic increase factor of 1.10, a strength reduction factor of 0.85, and an ultimate load factor of 1.00.

10B.4.3 Overall Structural Response

In addition to local impact effects, the Safety Class 1 and 2 buildings exterior must also be designed to resist the overall effects of missile impact. Various methods for designing to resist the overall effects of missile impact are available. In addition to the procedure outlined below, the formulations as presented in ACI 349 Appendix C are also acceptable.

The response of a structure to missile impact depends largely on the location of impact, on the dynamic properties of the structure (target), and on the kinetic energy of the missile. For tornado-generated missiles, the assumption of a plastic collision between the missile and concrete target is acceptable. This type of impact is characterized by significant local deformation of the missile or target. Tornado wind-driven objects, which are hard relative to the target structure, such as pipe missiles will penetrate into concrete targets. Soft missiles such as wood will deform upon striking the concrete structure.

If the local deformation characteristics of the missile or target can be determined accurately, and the assumption of plastic collision is acceptable, the applied force time history can be developed using methods described in sections 10B.4.3.2 and 10B.4.3.3, and the analysis for overall response to the force can be carried out as for impulsive load.

Interface force-time history for steel pipe and wood missiles striking reinforced concrete targets can be characterized as a rectangular pulse with the average force value F_1 applied over a time duration t_d. F_1 and t_d values for missiles indicated in Table 10B-1 have been established and are listed in Table 10B-3. The theory and background for the values in Table 10B-3 for two cases of plastic collision of target penetration and missile deformation are described in Sections 10B.4.3.1 and 10B.4.3.2 respectively. The analysis procedure for rectangular impulsive loads is described in Section 10B.4.3.3.

For the cases where local deformation of a missile or target structure cannot be determined accurately or local deformation on impact is negligible, and for all the cases of elastic and semi-elastic impact, the conservation of Energy and Momentum method described in Section 10B.4.3.4 shall be used.

B.4.3.1 Interface Forcing Function of Nondeforming Missile Penetrating into the Target Structure

When a missile penetrates into the target structure upon impact, the interface forcing function applied to the structure by the missile can be developed based on application of the equation of motion during deceleration of the missile.

It is assumed that the velocity varies linearly to zero as a function of time as the missile penetrates the structure. Implicit in this assumption is a constant acceleration, and consequently a constant force of impact. The total kinetic energy of the missile before impact is expended as it penetrates into the structure.

If it is assumed that the overall deflection of the structure during impact is negligible when compared to penetration, then the work done by the missile as it penetrates the structure is equal to the initial kinetic energy. Thus:

$$F_1 x = \frac{1}{2}\left(\frac{Wv_o^2}{g}\right)$$

or,

$$F_1 = \frac{Wv_o^2}{2gx}$$

Where F_1 = force of impact; g = acceleration of gravity; W = weight of missile; v_o = initial velocity of missile; and x = penetration (See Section 10B.4.2.3). Based on the assumption that the velocity reduces linearly to zero, the time of impulse or duration of the impact force is:

$$t_d = \frac{2x}{v_o}$$

The value of F_1 and t_d completely define a rectangular impulse loading applied to the structure.

It is convenient to combine these formulas, rearrange the terms and solve for F_1.

$$F_1 = \frac{1}{2}\left(\frac{Wv_o^2}{g}\right) \cdot \frac{2}{t_d v_o} = \frac{mv_o}{t_d}$$

and impulse, $i = F_1 t_d = mv_o$

where m is the mass of the missile

10B.4.3.2 Interface Forcing Function for Deformable Missile Crushing upon Impact with Target Structure

The impact force time history for the soft missile is developed based on the deformation of the missile, assuming the target is rigid. The load imposed on a rigid structure by an impacting deformable missile is composed of two parts. The first part is the crushing strength, and the second part is the inertial force, or time rate of change of momentum of the missile:

$$P_c + \gamma V^2 = F_1$$

where P_c = missile crushing strength at impact interface; γ = mass per unit length of uncrushed missile at impact interface; V = velocity of uncrushed portion of missile; and F_1 = force applied to rigid structure. P_c and γ are functions of the crushed length x of the missile which, in turn, is a function of time.

For the typical tornado generated wood plank missile the second term (γV^2) in the formula is negligible. Therefore the force (F_1) applied to the rigid structure is then approximately equal to the missile crushing strength (P_c).

The crushed length of the wood missile is then equal to initial kinetic energy divided by the missile crushing strength,

$$x = \frac{1}{2}\left(\frac{Wv_o^2}{g}\right)\frac{1}{P_c}$$

Assuming that the velocity reduces linearly to zero as a function of time, the duration of impact force:

$$t_d = \frac{2x}{v_o}$$

where:

P_c = F_cA ≈ force of impact

x = crushed length

F_c = dynamic crushing stress of the wood missile parallel to grain = 4 ksi (Ref. 10B.2)

A = cross sectional area of the missile

It is convenient to combine these formulas, rearrange the terms and solve for P_c:

$$P_c = \frac{1}{2}\left(\frac{Wv_o^2}{g}\right) \cdot \frac{2}{t_d v_o} = \frac{mv_o}{t_d}$$

and impulse, $i = P_c t_d = \underline{\underline{mv_o}}$

These equations are the same equation as derived for hard missiles.

10B.4.3.3 Analysis for Rectangular Impulsive Loads

The equivalent static missile load (W_m) concentrated at the impact point for the structure which responds elastically is equal to:

$$W_m = DLF \cdot F_1$$

where F_1 is a suddenly applied constant load with a limited duration t_d, and Dynamic Load Factor (DLF) is obtained from Figure 10B-1. (T_e is effective period of the structure at point of impact.)

For the elasto-plastic response, and in the absence of static loads present, W_m is equal to the required structure collapse load R_m. The Dynamic Load Factor which is equal to R_m/F_1 is obtained from Figure 10B-2. The allowable ductility is per ACI 349, Appendix C.

For short duration loading where the natural period of the structure is five or more times the load duration, the Dynamic Load Factor can be computed without appreciable error by:

$$DLF = \frac{\omega_e t_d}{\sqrt{2\mu-1}} = \frac{2\pi f_e t_d}{\sqrt{2\mu-1}} = \frac{2\pi(t_d/T_e)}{\sqrt{2\mu-1}}$$

where:

$\omega_e = \sqrt{\frac{k_e}{M_e}}$, effective radial frequency, radians/sec of the structural element subjected to impact force

μ = ductility ratio

$f_e = \frac{\omega_e}{2\pi}$

and $T_e = \frac{1}{f_e}$

If a conservative error of up to 30 percent is acceptable, then the same equation with the limits shown can be used throughout t_d/T_e range:

$$DLF \cong \frac{2\pi(t_d/T_e)}{\sqrt{2\mu-1}} \leq \frac{1}{1-\frac{1}{2\mu}}$$

i.e.:

$$DLF = \frac{2\pi(t_d/T_e)}{\sqrt{2\mu-1}}, \text{ for } \left(\frac{t_d}{T_e}\right) < \frac{\mu}{\pi\sqrt{2\mu-1}}$$

and,

$$DLF = \frac{1}{1-\frac{1}{2\mu}}, \text{ for } \left(\frac{t_d}{T_e}\right) \geq \frac{\mu}{\pi\sqrt{2\mu-1}}$$

The equivalent static missile load then is equal to:

$$W_m = DLF \cdot F_1$$

Recall that $F_1 = \frac{mv_o}{t_d}$, therefore

$$W_m = \frac{2\pi f_e t_d}{\sqrt{2\mu-1}} \cdot \frac{mv_o}{t_d} = \frac{2\pi f_e mv_o}{\sqrt{2\mu-1}} = \frac{2\pi f_e i}{\sqrt{2\mu-1}}$$

Note that, for very long duration loading, the dynamic load factor is at maximum and the limiting value of dynamic load factor is 100 percent accurate.

$$DLF = \frac{1}{1-\frac{1}{2\mu}}$$

For elastic response (μ = 1.0), DLF = 2.0.

The lowest permissible ductility ratio is 1.3 for shear carried by concrete alone. Therefore, the largest dynamic load factor to be used in design does not need to be larger than 1.625. The equivalent static missile load is then equal to:

$$W_m \leq 1.625F_1$$

For other permissible ductility ratios the equivalent static missile load shall be limited by

$$W_m \leq \frac{1}{(1-\frac{1}{2\mu})} F_1$$

Note that for flexure to control design, thus allowing the ductility ratios or rotational capacities given in Section C.3.3, C.3.4, and C.3.5, of the ACI 349 to be used, the load capacity of the structural element in shear shall be at least 20% greater than the load capacity in flexure.

For conservative design without regard to duration (t_d) or effective period of the structure (T_e), and other permissible ductility ratios, the equivalent static missile load can be taken as equal to:

$$W_m = 1.625F_1$$

(See table 10B-3 for F_1 values.)

For structural elements that are expected to deform beyond their elastic limit, the effects of static loads on the available resistance shall be accounted for. The effective ductility ratio with the effective available resistance equal to R_m-R_s method described in ACI 349, Appendix C commentary shall be used.

10B.4.3.4 Conservation of Energy and Momentum Method for Evaluation of Overall Structural Response

The methodology described in this section is predicated on the assumption that local deformation on impact is negligible. While this ideal situation rarely exists in actual impacts, it is reasonable and acceptable to employ the method described in this section for cases where local deformation of missile or target structure cannot be determined accurately. This method is conservative with respect to overall failure in that it neglects energy absorption through local deformation upon impact. Before impact, the kinetic energy of the missile is known. During impact, some portion of this energy is transmitted to the structure to be absorbed as strain energy. Conservation of momentum and energy are used to calculate the transmitted kinetic energy and maximum displacement. Structure displacement limits or energy absorption capability are determined by the allowable ductility criteria.

For conservation of momentum,

$$mv_o = mv_1 + M_eV_1$$

For conservation of energy,

$$\frac{1}{2} mv_0^2 = \frac{1}{2} mv_1^2 + \frac{1}{2} M_eV_1^2$$

where m = missile mass; M_e = target effective mass; v_o = velocity of missile before impact; v_1 = velocity of missile after impact; and V_1 = velocity of target after impact.

An additional equation may be written defining the coefficient of restitution:

$$e = \frac{V_1 - v_1}{v_o}$$

For ideal plastic impact, energy is dissipated and the two masses move off at the same velocity ($V_1 = v_1$) and e = 0. For ideal elastic impact, e = 1 and energy is conserved. Note that it is always conservative to assume elastic impact, though in some cases a value of less than one for the coefficient of restitution may be justified based on experience.

Solving above equation for v_1, and substituting into the momentum equation yields expressions for post-impact target and missile velocity:

$$V_1 = \frac{\frac{m}{M_e}}{1 + \frac{m}{M_e}} [v_o (1 + e)] \quad \text{(post-impact target velocity)}$$

$$v_1 = (v_o) \frac{\frac{m}{M_e} - e}{1 + \frac{m}{M_e}} \quad \text{(post-impact missile velocity)}$$

Note that for $m/M_e > e$, the missile velocity is a positive value which indicates that the missile is still moving toward the target after impact. The residual velocity represents kinetic energy

which the target must absorb in addition to that imparted to it during the initial impact. In equation form, the energy absorption capability of the target must be greater than:

$$KE_1 = \frac{1}{2} M_e V_1^2, \qquad \text{for } \frac{m}{M_e} \leq e$$

$$KE_1 = \frac{1}{2} M_e V_1^2 + \frac{1}{2} m v_1^2, \qquad \text{for } \frac{m}{M_e} > e$$

It is important to note that an underestimation of the target mass leads to a conservative estimation of the energy transmitted to the structure.

In terms of the allowable ductility and collapse load, the energy absorption capability of the structure (area under the resistance-displacement curve) is:

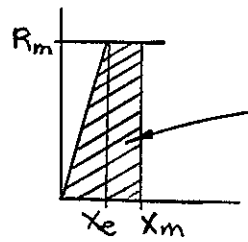

$$SE = \frac{R_m X_e}{2} + R_m(X_m - X_e)$$

where SE = (strain) energy absorption capability of the structure; R_m = static collapse load; X_e = effective yield displacement (elastic displacement under a static load R_m); and X_m = allowable displacement.

Substituting the definition of allowable ductility,

$$\mu = \frac{X_m}{X_e}$$

into the equation above, results in the expression:

$$SE = R_m X_e \quad \mu - \frac{1}{2}$$

The structure resists impact if SE is greater than KE_1.

For a tornado generated missile under the general case of semi-elastic impact and elasto-plastic response (w/o static loads present),

where:

$$\frac{m}{M_e} \leq e$$

the above equations will reduce to the following:

$$KE_1 = \frac{1}{2} M_e \left[\frac{(1+e)\ v_o}{1 + \frac{M_e}{m}} \right]^2$$

$$SE = R_m X_e \left(\mu - \frac{1}{2}\right) = \frac{k_e X_e^2}{2} (2\mu - 1)$$

Setting $KE_1 = SE$, results in

$$\frac{1}{2} M_e \left[\frac{(1 + e)\ v_o}{(1 + \frac{M_e}{m})} \right]^2 = \frac{k_e X_e^2}{2} (2\mu - 1)$$

Solving for

$$X_e = \sqrt{\frac{M_e}{(2\mu-1)k_e}} \cdot \frac{(1 + e)\ v_o}{(1 + \frac{M_e}{m})}$$

The equivalent static missile load, W_m, for elasto-plastic system is equal to the required resistance $R_m = X_e k_e$. Substituting X_e from above results in

$$W_m = R_m = \sqrt{\frac{k_e}{M_e}} \cdot \frac{(1 + e)\ v_o m M_e}{(m + M_e)\sqrt{2\mu-1}}$$

substituting $\omega_e = \sqrt{\frac{k_e}{M_e}}$ results in

$$W_m = R_m = \omega_e \cdot \frac{(1 + e)\ v_o m M_e}{(m + M_e)\sqrt{2\mu-1}}$$

for $M_e >> m$

$$W_m = R_m = \frac{\omega_e\ (1+e)\ v_o m}{\sqrt{2\mu-1}} = \frac{(2\pi f_e)(1+e) v_o m}{\sqrt{2\mu-1}}$$

Note that for plastic impact e=0, the equation will reduce to

$$W_m = \frac{(2\pi f_e) v_o m}{\sqrt{2\mu-1}}$$

This is identical to the equations derived considering missile penetration and/or missile crushing upon impact.

General case of semielastic impact and elastoplastic response with static loads present is given below.

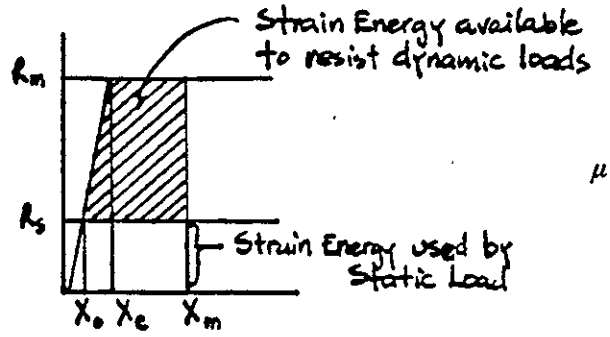

$$\mu = \frac{X_m}{X_e}$$

available strain energy is

$$SE = R_m \left(\frac{X_e - X_o}{X_e}\right)\left[X_m - \frac{X_o + X_e}{2}\right]$$

calculate $\mu_{effect} = \dfrac{\mu X_e - X_o}{X_e - X_o}$, (Note that $\mu_{effect} > \mu$)

then proceeding as before, one obtains

$$W_m = (R_m - R_s) = (2\pi f_e)\frac{(1+e)v_o m}{\sqrt{2\mu_{effect} - 1}}$$

10B.4.3.5 Formulas for Evaluation of Overall Response of Concrete Target Struck by Missile

Refer to Table 10B-4 for a summary of formulas.

10B.4.3.6 Target Structure Effective Mass and Stiffness

The effective mass and stiffness of the target can be established by static analysis or by the SAP "Effective Period Calculation." The target is represented by a discrete beam, frame, and/or finite element structural system where a static unit load is applied at the impact point. The expressions for k_e and M_e follow:

$$k_e = \frac{1}{\Delta_u}$$

$$M_e = \frac{\int_0^A \frac{1}{2} mv^2 \, dA}{\frac{1}{2} v_e^2} = \frac{\sum_{i=1}^{n} \frac{1}{2} m_i v_i^2}{\frac{1}{2} v_e^2}$$

Assuming $v = C\Delta$, where C is a constant relating displacement and velocity, and v_e is effective velocity.

$$M_e = \frac{\sum_{i=1}^{n} m_i \Delta_i^2}{\Delta_u^2}$$

where:

Δ_u	=	deflection at impact point caused by unit load
Δ_i	=	deflection at node i caused by unit load at impact point
m_i	=	mass of target associated with node i
n	=	number of nodes of the structural model

Effective stiffness, mass and frequency, and maximum moment derived in general terms for simply supported, fixed-fixed, and cantilever beam for the elastic range of analysis are shown in Table 10B-5.

Table 10B-5 is applicable for $W_m < \frac{F_1}{(1-1/2\mu)}$. When $W_m = \frac{F_1}{(1-1/2\mu)}$, W_m is at maximum, constant, and does not vary with the location. The maximum moment is then computed by conventional means: for simply supported beam $M_{max} = \frac{W_m L}{4}$; for fixed-fixed beam $M_{max} = \frac{4W_m L}{27}$; for cantilever beam $M_{max} = W_m L$. The maximum beam shear is equal to W_m, for all conditions.

10B.4.3.7 Effective Slab Width in Flexure for Impact Loads

In evaluating flexural stresses in rectangular slabs for equivalent static concentrated loads, the following concept regarding effective width can be used:

a) A slab supported on four edges can be designed as a two-way slab provided the ratio of the longer to the shorter spans within a panel is not greater than 2.0. The slab may be designed using the direct design method or the equivalent frame method described in Section 13-6 and 13.7 of ACI318.

b) A slab supported on all four edges shall be designed as a one-way slab in the short direction if the ratio of the longer span to the shorter span exceeds 2.0.

c) A slab supported on two opposite edges only shall be designed as a one-way slab.

d) A slab designed as a one-way slab may be designed as a beam provided that for concentrated loads the equivalent width is as provided in Table 10B-6.

e) The loads resulting from a detailed finite element analysis may also be used in lieu of the above procedures.

10B.4.3.8 Load Combinations and Stresses

In design for overall response of major structural systems the load combinations and associated stresses specified in Section 10.5 shall govern. For design of structural elements and local effects, nonlinear structural response is acceptable. See Table 10B-2 for concrete barrier thickness required to resist wind generated missile.

10B.5 Other Considerations

Safety Class 1 and 2 structures will be designed for the impact forces resulting from a failure of an adjacent Safety Class 3 or 4 structure during design basis wind.

TABLE 10B-1

DESIGN PARAMETERS

Wind Speed

Maximum Horizontal Wind Speed (Fastest-Mile)-Safety Class 1 90[1] mph

Maximum Horizontal Wind Speed (Fastest-Mile)-Safety Class 2 80[2] mph

Importance Factor

I = 1.00 for Safety Class 1 and 2

Missile Criteria

Safety Class	Missile	Weight lbs.	Contact[3] Area in^2	Horizontal[4] Velocity fps	Max. Ht. ft.	Shape[5] Factor
1	Wood Plank 2"x4"	15	5.25	73.5	50	0.72
2	Wood Plank 2"x4"	15	5.25	73.5	30	0.72

Relative Hardness of Missile

The wood plank missile is considered soft relative to concrete target since the missile crushing stress (σ_m=4 ksi) is less than concrete crushing stress (σ=2f'_c = 8 ksi)

NOTES:

(1) Based on annual probability of exceedance of $1x10^{-4}$

(2) Based on annual probability of exceedance of $1x10^{-3}$

(3) Standard dressed size 1½"x3½"

(4) Vertical missile velocity is 2/3 horizontal missile velocity. The horizontal and vertical velocities should not be vectorially combined.

(5) Assumed flat nosed missiles.

TABLE 10B-2

BARRIER THICKNESS TO RESIST MISSILE IMPACT[1]

Missile	Weight lbs.	Design Impact Zone	Direction of Travel	Missile Velocity fps	Barrier Thickness Concrete[2] in	Steel Plate[3] Single	Double
Wood Plank	15	All	Horiz	73.5	2.60	13ga	18ga
			Vert	49.0	1.84	17ga	22ga

NOTES:

(1) Barrier thicknesses represent the minimum concrete thickness to resist 'local' missile effects. Overall effects must still be considered.

(2) Concrete thicknesses for soft missile based on conservative approach method described in Section 10B.4.2.4 and f'_c=4000 psi.

(3) Steel barrier thickness based on formulas given in Chapter 6 of Reference 10B.1.

TABLE 10B-3

INTERFACE FORCING FUNCTIONS[1]
(PLASTIC IMPACT)

for f'_c = 4000 psi

Missile	Weight W(lbs.)	Contact Area A_c (sq. in.)	Crush. Stress σ_m(ksi)	Missile Travel	Velocity fps	Impact Force F_1 (kips)	Duration t_d(sec)
Wood Plank (soft)	15	5.25	4.0	horizontal	73.5	21.0	0.00163
				vertical	49.0	21.0	0.00109

NOTE:

(1) This table is applicable to concrete (rigid) targets only.

TABLE 10B-4

FORMULAS FOR EVALUATION OF OVERALL RESPONSE OF CONCRETE TARGET STRUCK BY MISSILE

	Basis of Analysis			
	Penetration (Steel Pipe striking concrete target	Missile Crushing (Wood Plank & pole missiles	Conservation of Energy and Momentum	
			$e = 0$	$e \neq 0$
Penetration Depth, x	NDRC formula	_____	_____	_____
Crushing Length, x	_____	$\frac{mv_o^2}{2P_c}$	_____	_____
Duration, t_d	$\frac{2x}{v_o}$	$\frac{2x}{v_o}$	_____	_____
Impulse ,i	mv_o	mv_o	_____	_____
Impact Force, F_1	$\frac{mv_o}{t_d}$	$\frac{mv_o}{t_d} = P_c$	_____	_____
Effective Static Missile Load W_m: W_m for μ=1.0 ($W_m \leq 2F_1$)	$mv_o\omega_e$	$mv_o\omega_e$	$mv_o\omega_e$	$mv_o\omega_e(1+e)$
W_m for $\mu \neq 1.0$ $\left(W_m \leq \frac{F_1}{1-\frac{1}{2\mu}}\right)$	$\frac{mv_o\omega_e}{\sqrt{2\mu-1}}$	$\frac{mv_o\omega_e}{\sqrt{2\mu-1}}$	$\frac{mv_o\omega_e}{\sqrt{2\mu-1}}$	$\frac{mv_o\omega_e}{\sqrt{2\mu-1}}(1+e)$

where, $\omega_e = \sqrt{\frac{k_e}{M_e}}$

k_e = effective stiffness at impact point
M_e - effective mass at impact point

See Section 10B.4.3.6

TABLE 10B-5

EFFECTIVE MASS, STIFFNESS, FREQUENCY, AND MAXIMUM MOMENT IN BEAMS DUE TO IMPACTIVE LOADS

	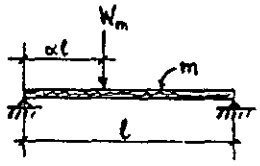	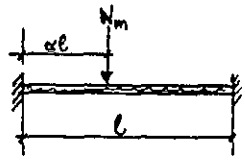	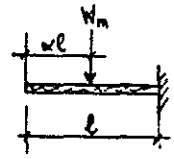
effective mass M_e	$\frac{m\ell(2+4\alpha-\alpha^2-6\alpha^3+3\alpha^4)}{105\alpha^2(1-\alpha)^2}$	$\frac{m\ell(3+\alpha-\alpha^2)}{140\alpha^2(1-\alpha)^2}$	$\frac{m\ell(33+41\alpha+29\alpha^2+2\alpha^3)}{140(1-\alpha)^2}$
effective stiffness K_e	$\frac{3EI}{\alpha^2(1-\alpha)^2\ell^3}$	$\frac{3EI}{\alpha^3(1-\alpha)^3\ell^3}$	$\frac{3EI}{(1-\alpha)^3\ell^3}$
effective frequency $f_e=\frac{K(\alpha)}{\ell^2}\sqrt{\frac{EI}{m}}$ where $K(\alpha)$ is:	$\frac{2.825}{\sqrt{2+4\alpha-\alpha^2-6\alpha^3+3\alpha^4}}$	$\frac{3.262}{\sqrt{\alpha(1-\alpha)(3+\alpha-\alpha^2)}}$	$\frac{3.262}{\sqrt{(33+8\alpha-12\alpha^2-27\alpha^3-2\alpha^4)}}$
Maximum moment $\mathfrak{M}_{max}$	@ $\alpha=0.5$ $K(0.5)=1.582$ $W_m=\frac{4.44}{\ell^2}\sqrt{\frac{EI}{m}}\cdot\frac{v_0 m_1(1+e)}{\sqrt{2\mu-1}}$ $\mathfrak{M}_{max}=0.25W_m\ell$ $\mathfrak{M}_{max}=\frac{2.485}{\ell}\sqrt{\frac{EI}{m}}\cdot\frac{v_0 m_1(1+e)}{\sqrt{2\mu-1}}$	@ $\alpha=0.2426$ $K(0.2426)=4.265$ $W_m=\frac{26.80}{\ell^2}\sqrt{\frac{EI}{m}}\cdot\frac{v_0 m_1(1+e)}{\sqrt{2\mu-1}}$ $\mathfrak{M}_{max}=0.1392W_m\ell$ $\mathfrak{M}_{max}=\frac{3.730}{\ell}\sqrt{\frac{EI}{m}}\cdot\frac{v_0 m_1(1+e)}{\sqrt{2\mu-1}}$	@ $\alpha=0$ $K(0)=0.5670$ $W_m=\frac{3.568}{\ell^2}\sqrt{\frac{EI}{m}}\cdot\frac{v_0 m_1(1+e)}{\sqrt{2\mu-1}}$ $\mathfrak{M}_{max}=W_m\ell$ $\mathfrak{M}_{max}=\frac{3.568}{\ell}\sqrt{\frac{EI}{m}}\cdot\frac{v_0 m_1(1+e)}{\sqrt{2\mu-1}}$

where: $W_m=\frac{(2\pi f_e)v_0 m_1(1+e)}{\sqrt{2\mu-1}}$ = equivalent static missile load

- m_1 = missile mass
- v_0 = missile velocity before impact
- m = beam mass per unit length
- μ = allowable ductility
- e = coefficient of restitution; $e=0$ for plastic collision, See Sect 10B.4.3
- E = modulus of elastisity for beam
- I = beam moment of inertia; use $I=\frac{1}{2}(I_{gross}+I_{cracked})$ for concrete members

TABLE 10B-6

EFFECTIVE SLAB WIDTH[1]

RATIO OF MOMENT CAPACITY
PERPENDICULAR TO SPAN DIRECTION
TO MOMENT CAPACITY IN SPAN DIRECTION

	.25	.50	.75	1.0
Load at Center	1.00L	1.41L	1.73L	2.00L
Load at Edge	.44L	.62L	.76L	.87L

Where L = Span Length

Notes:

(1) Determined by yield line analysis for a simply supported one-way slab.

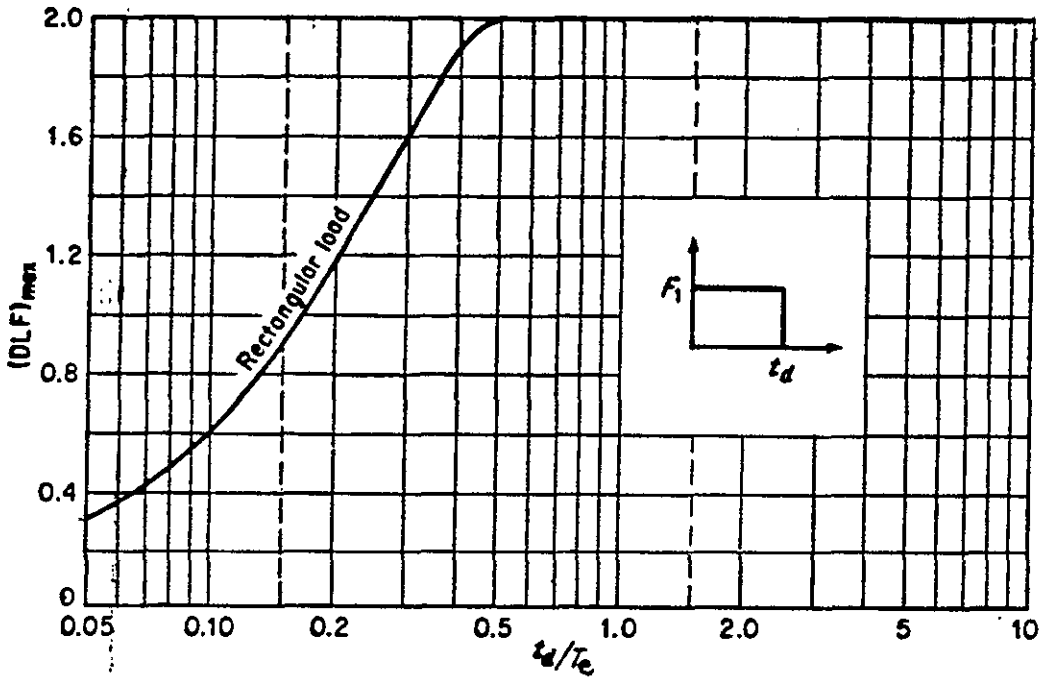

FIGURE 10B-1

Maximum response of one-degree elastic systems (undamped) subjected to rectangular load pulses having zero rise time. (Reference 10B.3)

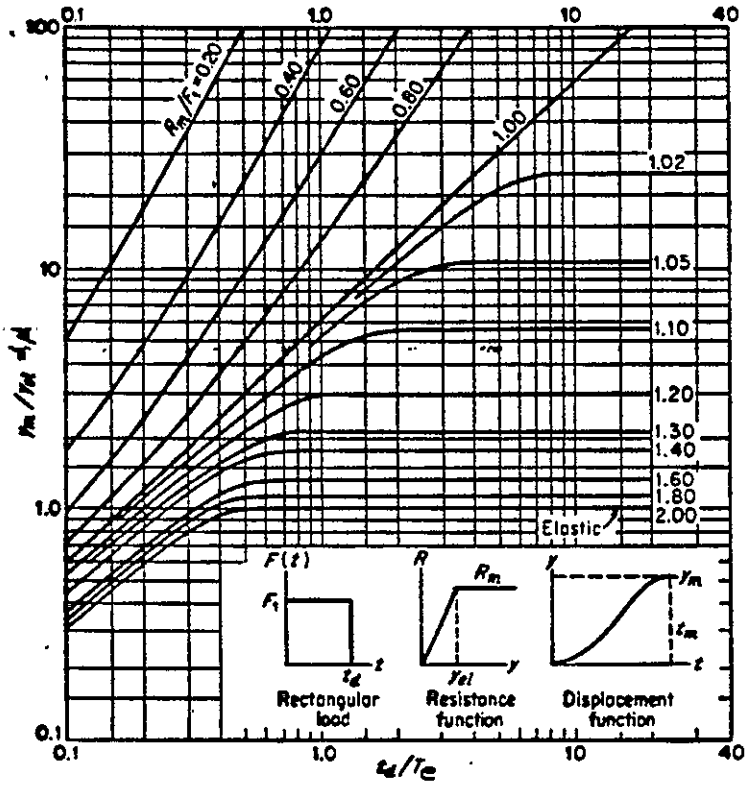

FIGURE 10B-2

Maximum response of elasto-plastic one-degree systems (undamped) due to rectangular load pulses. (Reference 10B.3)

THIS PAGE INTENTIONALLY
LEFT BLANK

STRUCTURAL AND CIVIL BASIS FOR DESIGN

APPENDIX 10C

HEADED ANCHOR BOLTS AND EXPANSION ANCHORS

10C.1 PREFACE

This guide governs the design of headed anchor bolts and expansion anchors. The following are important considerations relevant to the design methods herein:

10C.1.1 Headed anchor bolts have been standardized to minimize drawing effort. (See Table 10C-1.) The use of anchor bolts which deviate from this list should be minimized. The minimum anchor bolt diameter will be 1/2 inch.

10C.1.2 Anchor bolt material will be ASTM A307 (Grade B), ASTM A36, or ASTM A193 (Grade B8) with ASTM A563 nuts, except when shown otherwise on design drawings.

10C.1.3 Concrete properties herein are based on a minimum compressive strength of 4000 psi unless noted otherwise.

10C.1.4 Headed anchor bolts will be heavy hex bolts or threaded steel bars with one heavy hex nut placed in concrete. Bolt thread at the embedded end of each threaded steel bar will be staked at two places below heavy hex nut or tack welded.

10C.1.5 Headed weld studs will be ASTM A108 or ASTM A276 Type 304L material. The configuration of the head for headed weld studs will meet the requirements of ACI 349-85, Appendix B, Section B.4.5.2. Headed weld studs will be designed using the procedures given for headed anchor bolts.

10C.1.6 Expansion anchors will be Drillco Maxi-Bolts or approved equal. Refer to Table 10C-14 through 10C-16 for design data for Drillco Maxi-Bolts.

10C.1.7 Design criteria will be based on strength design method. All working loads and load combinations will include the proper load factors.

10C.1.8 All headed anchor bolts and expansion anchors will be designed for combined shear and tension loads in accordance with methods herein.

10C.1.9 Ductility will be ensured by development of a failure mechanism controlled by the yielding of the anchor bolt steel rather than

the brittle tensile failure of concrete. This is accomplished by designing the pullout strength of the "concrete failure cone" (P_c) such that it equals the minimum specified ultimate tensile strength (T_u) or "full anchor value" of the standard anchor bolt. Refer to Figure 10C-1 for illustrations of the concrete failure cone concept.

10C.1.10 All bolt nuts will be brought to a "snug tight" condition to ensure good contact between attachments. Concrete will be at least 14 days old prior to tightening to prevent bolt rotation. (Refer to Section 10C.5)

10C.1.11 This design practice is based primarily on "Appendix B - Steel Embedments" of ACI 349-85 Code.

10C.1.12 ACI concrete bearing requirements are not required to be met since the anchor bolt head satisfies the conditions of ACI 349, Appendix B, Section B.4.5.2.

10C.1.13 Requirements for the design of base plates or similar attachments secured by anchor bolts will be in accordance with applicable codes.

10C.1.14 The following mechanisms are not recommended:

10C.1.14.1 Shear lugs to transmit shear loads to any concrete anchorage subject to tensile loading. Shear forces will be distributed to bolts in accordance with their ability to transmit the combined shear and tension loads as set forth herein.

10C.1.14.2 Steel plates used at the embedded end of anchor bolts for the purpose of reducing bearing stresses. Their inclusion reduces the tensile capacity of the concrete and does not affect the anchorage capacity. Reason: The plate area does not contribute to the tensile capacity of the concrete cone and must be subtracted from the effective tensile stress area.

10C.1.15 Anchor bolt sleeves when used must be completely filled with non-shrink cement grout after proper alignment with the base plate or similar attachment. Sleeves for epoxy grouted baseplates shall be filled with flexible moldable material.

10C.2 CODES AND STANDARDS

The more restrictive of the following codes have been used in developing this design guide.

10C.2.1 ACI 349-85, "Appendix B - Steel Embedments"

10C.2.2 ACI 318-89, "Building Code Requirements for Reinforced Concrete."

10C.2.3 AISC, "Manual of Steel Construction, Ninth Edition, 1989."

10C.2.4 ASTM Standards: A36-87, A307-88, and A193-87.

10C.3 HEADED ANCHOR BOLT DESIGN

10C.3.1 General

Headed anchor bolts, including weld studs, are designed to transmit the loads from equipment and steel structures to their concrete foundations.

Anchorage of the embedded bolts into concrete is designed to prevent tension, shear, and lateral bursting failure of the concrete. These three failure phenomena are briefly described as follows:

Tension: This failure mode of concrete around a headed anchor bolt in tension is a 45° cone or truncated pyramid which radiates toward the surface from the anchor bolt head.

Shear: This failure mode of concrete around a headed anchor bolt in shear is one-half of a 45° cone or truncated pyramid which extends from the centerline of the bolt at the concrete surface laterally toward the edge in the direction of the shear.

Lateral Bursting: This failure mode of concrete around a headed anchor bolt in tension is a 45° cone or truncated pyramid which extends laterally towards the edge of the concrete from the anchor bolt head.

10C.3.2 Bolt Type

Standard headed anchor bolts, threaded rods with heavy hex nuts, or weld studs can be used. When threaded rods with nuts are used, the nut will be secured to the rod by tackweld or thread stake to prevent any movement. The bolt embedment length will be measured from the top of the concrete to the inside of the bolt head or a nut. The edge distance will be measured from the center of the bolt to the edge of the concrete.

The following sections (Sections 10C.3.3, 10C.3.4, and 10C.3.5) demonstrate the derivation of the design values for headed anchor bolts. Numerical values used are for ASTM A36/ASTM A307 materials. Values for other materials are given in Table 10C-17.

10C.3.3 Allowable Working Loads

The allowable working load in tension will be based on an ultimate design strength of .9 F_y or .8 F_{ut} (whichever is less) multiplied by the net tensile stress area per ACI 349 Appendix B.6. F_y is the minimum specified yield strength and F_{ut} is the minimum specified tensile strength of anchor steel.

The allowable working load in shear on an anchor bolt will be based on the coefficient of friction μ=0.55 times the allowable tension load.

See Tables 10C-2, 10C-5, 10C-8, and 10C-11 for allowable tension and shear loads for different material, type and size of bolts.

When both ultimate design shear and ultimate design tension loads are acting on the anchor bolt, the area of steel required for tension and shear will be additive.

The applied tension load, plus applied shear load divided by the coefficient of friction, will be less than or equal to the allowable tension load for the bolt.

10C.3.4 Anchorage Into Concrete

Anchor bolts will be fully developed by embedment into concrete. The development length (L_d) of the anchor bolts into concrete for shear and tension will be based on the ultimate tensile strength of the anchor bolt chosen and independent of the loads applied. If the anchor bolt used is larger than the anchor bolt size required, the development of the bolt into concrete will be based on the ultimate tensile strength of the bolt used. Tables 10C-3, 10C-6, 10C-9, and 10C-12 give ultimate tensile strength values for headed anchor bolts.

10C.3.4.1 Tension The concrete pullout strength will be based on a uniform tensile stress of 4 $\phi \sqrt{f'_c}$ acting on the effective stress area defined by the projected area of stress cone with the inclination angle of 45° radiating toward the surface from the anchor bolt head, minus the area of the anchor bolt head as shown in Figure 10C-1.

The effective stress area computed in this manner is equal to the stress area that is obtained for two-way punching shear by calculating the perimeter at a distance of one-half the effective depth from the edge of the load area multiplied by the effective depth as defined in Section 11.12 of ACI 318-89.

A Strength reduction factor (Ø) of 0.65 will be used to determine the concrete design strength unless the head of the anchor bolt is embedded beyond the far face reinforcement. In such cases, a Ø factor of 0.85 may be used.

a. Reduced Effective Stress Area

In actual practice, the effective projected stress area of an anchor bolt may not be fully available due to overlapping stress cones of adjacent anchor bolts or the close proximity of the concrete edge surfaces as shown in Figure 10C-2. In these cases, a reduced effective stress area will be used.

If the effective stress area is inadequate to develop sufficient strength, deeper embedment of the anchor bolt into the concrete will increase the projected cone radius and the effective stress area. If this is not possible with the existing pier size, the pier size will be increased or reinforcement will be provided.

b. Reinforcement for Tension

When reinforcement for tension is required, it will develop the full ultimate tensile strength of the anchor bolt (i.e., the contribution of any available tensile strength from the concrete's effective stress area is ignored). The tensile load is carried entirely by the reinforcement. A Ø factor of 0.9 will be used to determine the capacity of the tension reinforcement.

See Tables 10C-4, 10C-7, 10C-10, and 10C-13 for reinforcement required to develop the tension capacity of headed anchor bolts.

Reinforcement will be placed concentrically with the anchor bolt within a distance of $L_d/3$ or 4 inches (whichever is smaller) from the anchor bolt head as shown in Figure 10C-6. Reinforcing bars will be properly developed on both sides of the potential failure plane. If reinforcing development length (l_d) plus 6 inches is greater than the embedment of bolt (L_d), then the rebar size will be changed or bolt length L_d increased so that $L_d \geq l_d + 6$.

10C.3.4.2 Lateral Bursting

To prevent failure due to lateral bursting, the side cover distance will be such that the lateral concrete design strength exceeds the lateral bursting force. The lateral concrete design strength is based on a uniform tensile stress of $4\ Ø\ \sqrt{f'_c}$ acting on

an effective stress area defined by the projected area of a stress cone with an inclination angle of 45° radiating toward the side surface from the center of the anchor bolt head as shown in Figure 10C-3. A strength reduction factor (Ø) of .85 will be used to determine the concrete design strength.

The lateral bursting force is due to Poisson's effect when the anchor bolt is subjected to tension. The magnitude of this force will be taken to be one-fourth of the ultimate tensile capacity of the bolt, T_u. Figure 10C-3 gives derivation of the minimum edge distance (m_b) required to prevent lateral bursting.

a. Reduced Effective Stress Area

If several bolts parallel to a free edge are spaced such that there is an overlap of their failure planes (see Figure 10C-3), then the effect of this overlapping on the lateral concrete design strength will be considered. The edge distance will either be increased until the projected effective area (the full projected cone less any deductions for overlap) is sufficient to develop the full bursting force or, reinforcement to prevent bursting will be provided.

b. Reinforcement for Lateral Bursting

When bursting reinforcement is required, it will be provided to develop the full lateral bursting force from the bolt. A strength reduction factor Ø of 0.9 will be used to determine the capacity for calculating bursting reinforcement.

Tables 10C-4, 10C-7, 10C-10, and 10C-13 list reinforcement required to develop the lateral bursting force for various sizes of headed anchor bolts. Figure 10C-6(b) shows reinforcement placement.

10C.3.4.3 Shear

To prevent failure due to lateral pull-out of an anchor bolt due to shear loading toward a free edge the side cover distance (m_v) will be such that the lateral concrete strength exceeds the ultimate shear strength of the bolt (.55 T_u). The lateral concrete design strength is based on a uniform tensile stress of $4\ Ø\ \sqrt{f'_c}$ acting on an effective stress area defined by the projected area of a half stress cone with an inclination angle of 45° radiating toward the side surface from the center line of the anchor. (See Figure 10C-4.) A strength reduction factor Ø of .65 will be used to determine the concrete strength.

For specific pieces of rotating equipment where epoxy grout is specified, the check for the shear capacity of the anchor bolts may be waived. This can be done only if it can be shown that the bond between the baseframe and the epoxy grout is sufficient to resist the design shear load.

a. Reduced Effective Stress Area

Again, as for tension and bursting, if bolts are spaced such that there is an overlap of their failure planes (see Figure 10C-6), then the effect of this overlapping on the lateral concrete design strength must be considered. The edge distance will either be increased until the projected effective area is sufficient to develop the full shear strength of the bolt or, shear reinforcement may be provided.

b. Reinforcement for Shear

When reinforcement is required, the side cover edge distance will not be less than 1/3 m_v, where m_v is a minimum edge distance required for an isolated bolt without reinforcement. Reinforcement will be provided to resist the concrete wedge from spalling. The area of shear reinforcement will be determined as shown on Figure 10C-5.

See Tables 10C-4, 10C-7, 10C-10, and 10C-13 for reinforcement required to develop the shear capacity for various sizes of headed anchor bolts.

Alternately, reinforcement close to the Anchor bolt may be provided to prevent it from moving toward the free edge. In this case, the area of shear reinforcement will be equal to frictional shear capacity of the anchor bolt (0.55 T_u) divided by $\emptyset$ F_y, where $\emptyset$ will be taken as 0.9, and F_y is reinforcement yield stress.

10C.3.4.4 Minimum Edge Distance

Minimum edge distance in all cases will be no less than six inches.

Minimum edge distance for f'_c = 4000 psi and F_{ut} = 58000 psi, when no tension, bursting and shear reinforcement is provided, is controlled by shear (m_v = 8.53d) as indicated in Figures 10C-1, 10C-3 and 10C-4.

If reinforcement is provided for shear and/or tension, the minimum edge distance may be reduced to 1/3 of the value specified in Figures 10C-1 and 10C-4.

10C.3.4.5 Bolt Spacing

When no reinforcement is provided the spacing between bolts shall be two times the minimum edge distance required for shear (2 m_v).

10C.3.5 Design Example For Column Piers

When both shear and tension loads are acting on the anchor bolt, the area of steel required for tension and shear is additive. Therefore, the tensile force required to develop the necessary shear resistance and the tensile force of the tension load cannot exceed the total tensile strength of the bolt.

The following example demonstrates selection and design of an anchor bolt.

1. Select base plate size and anchor bolt arrangement.

2. Calculate the ultimate tensile and shear forces acting on the bolt.

   Say, the calculated tension and shear loads per bolt are:

   $T_u = 27k$,

   $V_u = 10k$

   Try 1-3/4" Ø Bolt: $ØT_n = 52.03k$ (from Table 10C-2)
   $ØV_n = 28.62k$ (from Table 10C-2)

$$\frac{T_u}{ØT_n} + \frac{V_u}{ØV_n} = \frac{27}{52.03} + \frac{10}{28.62} = .52 + .35 = .87 < 1.00, \text{ OK}$$

3. Calculate embedment length and edge distances.

   Tension: $m_t = 8.17d$ d = nominal diameter
   $L_d = 7.37d$ L_d = bolt embedment

   Lateral Bursting: $m_b = 3.56d$

   Shear: $m_v = 8.53d$

   Hence, $m_t = 8.17 \times 1.75 = 14.3"$

   $m_b = 3.56 \times 1.75 = 6.25"$

   $m_v = 8.53 \times 1.75 = 14.76"$

   $L_d = 7.37 \times 1.75 = 12.89"$

If foundation dimensions do not allow meeting these requirements (i.e., if bolt spacing $<2m_v$, or if pier dimension < bolt spacing + $2m_v$), use reinforcement.

4. Calculate reinforcement requirements.

Tension: $A_s = \frac{T_u}{\phi F_y}$

T_u = Ultimate tensile strength (see Table 10C-3)
F_y = Rebar yield stress
ϕ = 0.9 for tension and bursting

Lateral Bursting: $A_s = \frac{0.25\ T_u}{\phi F_y}$

Shear: $A_s = \frac{0.55\ T_u}{0.6F_y}$ (see Table 10C-4 and Figure 10C-5 for reinforcement)

10C.4 EXPANSION WEDGE ANCHOR DESIGN

10C.4.1 General

Expansion anchor design will be in accordance with the ultimate strength design provisions of ACI 349 Appendix B, Section B.7.

10C.4.2 Bolt Type

Bearing-type, undercut expansion anchors installed in a hole with a conical undercut near its blind end, such as Drillco Maxi-Bolt or equal, will be used. Non-undercut expansion anchors such as Hiltis will not be used.

The Drillco Maxi-Bolt anchor consists of a stud bolt, conical nut, expansion sleeve, distance tube, washer and heavy hex nut. See Figure 10C-7 for assembly details. The stud bolt and conical nut are fabricated from ASTM A193, Grade B7 material.

The Drillco Maxi-Bolt is designed to be a ductile anchor which transfers loads in the anchor stud to the concrete surrounding the undercut portion of the hole through bearing.

The Project Structural Engineer may authorize the use of alternate expansion anchors provided that it can be shown that they meet the design and testing requirements of ACI 349-85 Section B.7.1. Tests will be performed in accordance with ASTM E488-84 and the

allowable design values will not exceed one-third of the test failure loads.

The use of expansion wedge anchors which rely on friction between the wall of the hole and the expansion wedge is not permitted. This type of anchor does not satisfy the ductility requirements of ACI 349. The failure mode typically consists of anchor slippage which can be highly unpredictable and depends on the installation techniques.

10C.4.3 Bolt Installation

Installation of the Drillco Maxi-Bolt is as follows: (Refer to Figure 10C-8.)

a. A hole is drilled in concrete.

b. The hole is undercut using a special undercutting tool.

c. The hole is cleaned of concrete dust and debris using appropriate means such as oil-free compressed air or by vacuuming.

d. The anchor is set by drawing the stud and conical nut inside the expansion sleeve forcing the expansion sleeve to expand laterally into the undercut portion of the hole.

e. The material to be fastened is located and the stud tensioned.

10C.4.4 Bolt Application

Expansion anchors may be used for the following applications:

a. Items which are not designed in time to be included as embedded anchors.

b. Items which are located by the contractor in the field after the concrete is cast in place.

c. Equipment with little or no vibration.

d. Miscellaneous supports of minor significance with respect to loads and structural integrity.

e. Field supports.

Effort should be made to minimize the use of expansion anchors whenever practical.

10C.4.5 Expansion Anchor Design Procedure

The anchorage requirements of headed anchor bolts presented in Section 10C.3 also apply to expansion anchor design.

The allowable tension and shear loads for expansion anchors to resist factored loads are presented in Table 10C-14. These values apply to Drillco Maxi- Bolts only and are based on the minimum specified yield strength as determined by published test data.

The loads presented in Table 10C-14 apply to each anchor in a multiple anchor attachment. One-half of the ultimate design strength value will be used for a single anchor attachment.

Use straight-line interpolation for combined tension and shear loading.

10C.5 ANCHOR TIGHTENING REQUIREMENTS

The following requirements for tightening anchor bolts and expansion anchors should be specified.

10C.5.1 Headed anchor bolts should be brought to a "snug tight" condition. Snug tight is defined as the tightness attained by a few impacts of an impact wrench or the full effort of a man using an ordinary spud wrench.

10C.5.2 Drillco Maxi-Bolt expansion anchors will be tensioned by a torque wrench or hydraulic tensioner to the torque values indicated in Table 10C-18.

TABLE 10C-1

STANDARDIZED ANCHOR BOLT LENGTHS

(1) Dia. d.	(2) Bolt Length	Thread Length
1/2"	9"	1-1/2"
1/2"	15"	1-1/2"
1/2"	21"	1-1/2"
5/8"	9"	1-3/4"
5/8"	15"	1-3/4"
5/8"	21"	1-3/4"
3/4"	12"	2"
3/4"	18"	2"
3/4"	24"	2"
7/8"	12"	2-1/4"
7/8"	18"	2-1/4"
7/8"	24"	2-1/4"
1"	12"	2-1/2"
1"	18"	2-1/2"
1"	24"	2-1/2"

NOTES:

1. For bolt diameters greater than 1", select bolt length to meet specific requirements.

2. Bolt length equals embedment length (L_d) plus projection above concrete. Select a standardized bolt length, subtract bolt projection, and design bolt based on remaining embedment length (L_d).

TABLE 10C-2

ALLOWABLE TENSION AND SHEAR LOADS (A307 AND A36 ANCHOR BOLTS)
(For Bolt Selection)

Dia. D (in) (Note 1)	Tensile Stress Area (in^2) (Note 2)	Allowable Tension Load, $\emptyset T_n$ = $.9 \times A_t \times F_y$ (Kips) (Notes 3, 4)	Allowable Shear Load, $\emptyset V_n$ = $.55 \times \emptyset T_n$ (Kips) (Notes 3, 4)
1/2	0.103	3.33	1.84
5/8	0.176	5.70	3.14
3/4	0.219	7.09	3.90
7/8	0.324	10.50	5.77
1	0.445	14.42	7.93
1-1/4	0.763	24.72	13.60
1-1/2	1.155	37.42	20.58
1-3/4	1.606	52.03	28.62
2	2.160	69.98	38.49
2-1/4	2.861	92.70	50.98
2-1/2	3.568	115.60	63.58
2-3/4	4.454	144.31	79.37
3	5.438	176.19	96.91

NOTES:

1. Bolt sizes tabulated above include a corrosion allowance of 1/16" total on the diameter for bolts 1/2" and 5/8" in diameter and 1/8" total on the diameter for bolts 3/4" in diameter and more.

2. $\text{Area} = 0.7854 \left[(D - \text{allowance}) - \frac{0.9743}{n}\right]^2$

3. Allowable tension and shear loads are for materials conforming to ASTM A307 or ASTM A36. F_y = 36 ksi.

4. $\frac{T_u}{\emptyset T_n} + \frac{V_u}{\emptyset V_n} \leq 1.00$

TABLE 10C-3

ULTIMATE TENSILE CAPACITY (A36 AND A307 ANCHOR BOLTS)
(For Bolt Embedment)

Dia. D (in)	Tensile Stress Area A_t (in^2) (Note 1)	Tensile Capacity (for Concrete Design) F_{ut} = 58 ksi $T_u = A_t F_{ut}$ (kips) (Note 2)
1/2	0.142	8.24
5/8	0.226	13.11
3/4	0.334	19.37
7/8	0.462	26.80
1	0.606	35.15
1-1/4	0.969	56.20
1-1/2	1.405	81.49
1-3/4	1.90	110.20
2	2.50	145.00
2-1/4	3.25	188.50
2-1/2	4.00	232.00
2-3/4	4.93	285.94
3	5.97	346.26

NOTES:

1. Refer to AISC Manual, Ninth Edition, p. 4-147.

2. Ultimate tensile capacities are for materials conforming to ASTM A36. Capacities should also be used for materials conforming to ASTM A307 (F_{ut}=60 ksi).

TABLE 10C-4

REINFORCING STEEL REQUIREMENTS (A307 AND A36 ANCHOR BOLTS)

Reinforcing steel areas required when concrete effective stress area is not sufficient to develop tensile, bursting or shear capacity of the bolt.

Dia. D (in)	Tension $A_s = \frac{T_u}{0.9\ F_y}$	Bursting $A_s = \frac{0.25T_u}{0.9\ F_y}$	Shear $A_s = \frac{0.55T_u}{0.6\ F_y}$
1/2	0.15	0.04	0.13
5/8	0.24	0.06	0.20
3/4	0.36	0.09	0.30
7/8	0.50	0.12	0.41
1	0.65	0.16	0.54
1-1/4	1.04	0.26	0.86
1-1/2	1.51	0.38	1.24
1-3/4	2.04	0.51	1.68
2	2.69	0.67	2.22
2-1/4	3.49	0.87	2.88
2-1/2	4.30	1.07	3.54
2-3/4	5.30	1.32	4.37
3	6.41	1.60	5.29

F_y = 60 ksi, yield stress of reinforcement, ASTM A615, grade 60.
T_u values from Table 10C-3.

NOTES:

1. 1988 UBC Section 2607(k)3D requires a minimum of 2-#4 ties or 3-#3 ties around anchor bolts within the top five inches of the pier.

2. Reinforcing steel requirements are for bolt materials conforming to ASTM A307 or ASTM A36.

TABLE 10C-5

ALLOWABLE TENSION AND SHEAR LOADS (STAINLESS STEEL ANCHOR BOLTS)
(For Bolt Selection)

Dia. D (in) (Note 1)	Tensile Stress Area (in^2) (Note 2)	Allowable Tension Load, $\emptyset T_n$ = $.9 \times A_t \times F_y$ (Kips) (Notes 3, 4)	Allowable Shear Load, $\emptyset V_n$ = $.55 \times \emptyset T_n$ (Kips) (Notes 3, 4)
1-1/2	0.103	2.78	1.53
5/8	0.176	4.75	2.61
3/4	0.274	7.40	4.07
7/8	0.390	10.53	5.79
1	0.523	14.12	7.77
1-1/4	0.864	23.33	12.83
1-1/2	1.278	34.51	18.98
1-3/4	1.751	47.28	26.00
2	2.328	62.86	34.57
2-1/4	3.052	82.40	45.32
2-1/2	3.782	102.11	56.16
2-3/4	4.693	126.71	69.69
3	5.702	153.95	84.67

NOTES:

1. Bolt sizes tabulated above include a corrosion allowance of 1/16" total on the diameter.

2. $\text{Area} = 0.7854 \left[(D - .062) - \frac{0.9743}{n}\right]^2$

3. Allowable tension and shear loads are for materials conforming to ASTM A193, Grade B8, F_y = 30 ksi.

4. $\frac{T_u}{\emptyset T_n} + \frac{V_u}{\emptyset V_n} \leq 1.00$

TABLE 10C-6

ULTIMATE TENSILE CAPACITY (STAINLESS STEEL ANCHOR BOLTS)
(For Bolt Embedment)

Dia. D (in)	Tensile Stress Area A_t (in^2) (Note 1)	Tensile Capacity (for Concrete Design) F_{ut} = 75 ksi $T_u = A_t F_{ut}$ (kips) (Note 2)
1/2	0.142	10.65
5/8	0.226	16.95
3/4	0.334	25.05
7/8	0.462	34.65
1	0.606	45.45
1-1/4	0.969	72.68
1-1/2	1.405	105.38
1-3/4	1.90	142.50
2	2.50	187.50
2-1/4	3.25	243.75
2-1/2	4.00	300.00
2-3/4	4.93	369.75
3	5.97	447.75

NOTES:

1. Refer to AISC Manual, Ninth Edition, p. 4-147.

2. Ultimate tensile capacities are for materials conforming to ASTM A196, Grade B8 (Nominal AISI Type 304).

TABLE 10C-7

REINFORCING STEEL REQUIREMENTS (STAINLESS STEEL ANCHOR BOLTS)

Reinforcing steel areas required when concrete effective stress area is not sufficient to develop tensile, bursting or shear capacity of the bolt.

Dia. D (in)	Tension $A_s = \frac{T_u}{0.9\ F_y}$	Bursting $A_s = \frac{0.25T_u}{0.9\ F_y}$	Shear $A_s = \frac{0.55T_u}{0.6\ F_y}$
1/2	.20	.05	.16
5/8	.31	.08	.26
3/4	.46	.12	.38
7/8	.64	.16	.53
1	.84	.21	.69
1-1/4	1.35	.34	1.11
1-1/2	1.95	.49	1.61
1-3/4	2.64	.66	2.18
2	3.47	.87	2.86
2-1/4	4.51	1.13	3.72
2-1/2	5.56	1.39	4.58
2-3/4	6.85	1.71	5.65
3	8.29	2.07	6.84

F_y = 60 ksi, yield stress of reinforcement, ASTM A615, grade 60.
T_u values from Table 10C-6.

NOTES:

1. 1988 UBC Section 2607(k)3D requires a minimum of 2-#4 ties or 3-#3 ties around anchor bolts within the top five inches of the pier.

2. Reinforcing steel requirements are for bolt materials conforming to ASTM A196, Grade B8 (Nominal AISI Type 304).

TABLE 10C-8

ALLOWABLE TENSION AND SHEAR LOADS (CARBON STEEL WELD STUDS)
(For Stud Selection)

Dia. D (in) (Note 1)	Tensile Stress Area (in^2) (Note 2)	Allowable Tension Load, $\emptyset T_n$ = $.9 \times A_t \times F_y$ (Kips) (Notes 3, 4)	Allowable Shear Load, $\emptyset V_n$ = $.55 \times \emptyset T_n$ (Kips) (Notes 3, 4)
1/4	0.028	1.26	0.69
3/4	0.077	3.47	1.91
1/2	0.151	6.80	3.74
5/8	0.249	11.20	6.16
3/4	0.372	16.74	9.21
7/8	0.519	23.36	12.85

NOTES:

1. Bolt sizes tabulated above include a corrosion allowance of 1/16" total on the diameter.

2. Area = $0.7854 \left[(D - .062) - \frac{0.9743}{n}\right]^2$

3. Allowable tension and shear loads are for materials conforming to ASTM A108, F_y = 50 ksi.

4. $\frac{T_u}{\emptyset T_n} + \frac{V_u}{\emptyset V_n} \leq 1.00$

TABLE 10C-9

ULTIMATE TENSILE CAPACITY (CARBON STEEL WELD STUDS)
(For Stud Embedment)

Dia. D (in)	Tensile Stress Area A_t (in^2) (Note 1)	Tensile Capacity (for Concrete Design) F_{ut} = 55 ksi $T_u = A_t F_{ut}$ (kips) (Note 2)
1/4	0.049	2.70
3/8	0.110	6.05
1/2	0.196	10.78
5/8	0.307	16.89
3/4	0.442	24.31
7/8	0.601	33.06

NOTES:

1. Refer to AISC Manual, Ninth Edition, p. 4-147.

2. Ultimate tensile capacities are for materials conforming to ASTM A108 with minimum ultimate stress of 55 ksi.

TABLE 10C-10

REINFORCING STEEL REQUIREMENTS (CARBON STEEL WELD STUDS)

Reinforcing steel areas required when concrete effective stress area is not sufficient to develop tensile, bursting or shear capacity of the bolt.

Dia. D (in)	Tension $A_s = \frac{T_u}{0.9\ F_y}$	Bursting $A_s = \frac{0.25T_u}{0.9\ F_y}$	Shear $A_s = \frac{0.55T_u}{0.6\ F_y}$
1/4	.05	.01	.04
3/8	.11	.03	.09
1/2	.20	.05	.16
5/8	.31	.08	.26
3/4	.45	.11	.37
7/8	.61	.15	.51

F_y = 60 ksi, yield stress of reinforcement, ASTM A615, grade 60.
T_u values from Table 10C-9.

NOTES:

1. 1988 UBC Section 2607(k)3D requires a minimum of 2-#4 ties or 3-#3 ties around anchor bolts within the top five inches of the pier.

2. Reinforcing steel requirements are for bolt materials conforming to ASTM A108 with minimum ultimate stress of 55 ksi.

TABLE 10C-11

ALLOWABLE TENSION AND SHEAR LOADS (STAINLESS STEEL WELD STUDS)
(For Stud Selection)

Dia. D (in) (Note 1)	Tensile Stress Area (in^2) (Note 2)	Allowable Tension Load, $\emptyset T_n$ = $.9 \times A_t \times F_y$ (Kips) (Notes 3, 4)	Allowable Shear Load, $\emptyset V_n$ = $.55 \times \emptyset T_n$ (Kips) (Notes 3, 4)
1/4	0.028	1.01	0.55
3/8	0.077	2.77	1.52
1/2	0.151	5.44	2.99
5/8	0.249	8.96	4.93
3/4	0.372	13.39	7.37
7/8	0.519	18.68	10.28

NOTES:

1. Bolt sizes tabulated above include a corrosion allowance of 1/16" total on the diameter.

2. $\text{Area} = 0.7854 \left[(D - .062) - \frac{0.9743}{n}\right]^2$

3. Allowable tension and shear loads are for materials conforming to ASTM A304, F_y = 40 ksi.

4. $\frac{T_u}{\emptyset T_n} + \frac{V_u}{\emptyset V_n} \leq 1.00$

TABLE 10C-12

ULTIMATE TENSILE CAPACITY (STAINLESS STEEL WELD STUDS)
(For Stud Embedment)

Dia. D (in)	Tensile Stress Area A_t (in^2) (Note 1)	Tensile Capacity (for Concrete Design) F_{ut} = 85 ksi $T_u = A_t F_{ut}$ (kips) (Note 2)
1/4	0.049	4.17
3/8	0.110	9.35
1/2	0.196	16.66
5/8	0.307	26.10
3/4	0.442	37.57
7/8	0.601	51.09

NOTES:

1. Refer to AISC Manual, Ninth Edition, p. 4-147.

2. Ultimate tensile capacities are for materials conforming to ASTM A108 with minimum ultimate stress of 85 ksi.

TABLE 10C-13

REINFORCING STEEL REQUIREMENTS (STAINLESS STEEL WELD STUDS)

Reinforcing steel areas required when concrete effective stress area is not sufficient to develop tensile, bursting or shear capacity of the bolt.

Dia. D (in)	Tension $A_s = \frac{T_u}{0.9\ F_y}$	Bursting $A_s = \frac{0.25T_u}{0.9\ F_y}$	Shear $A_s = \frac{0.55T_u}{0.6\ F_y}$
1/4	.08	.02	.06
3/8	.17	.04	.14
1/2	.31	.08	.25
5/8	.48	.12	.40
3/4	.70	.17	.57
7/8	.95	.24	.78

F_y = 60 ksi, yield stress of reinforcement, ASTM A615, grade 60.
T_u values from Table 10C-12.

NOTES:

1. 1988 UBC Section 2607(k)3D requires a minimum of 2-#4 ties or 3-#3 ties around anchor bolts within the top five inches of the pier.

2. Reinforcing steel requirements are for bolt materials conforming to ASTM A108 with minimum ultimate stress of 85 ksi.

TABLE 10C-14

ALLOWABLE TENSION AND SHEAR LOADS (DRILLCO MAXI-BOLTS)
(For Bolt Selection)

Dia. D (in) (Note 1)	Tensile Stress Area (in^2) (Note 2)	Allowable Tension Load, $\emptyset T_n$ = $.81 \times A_t \times F_y$ (Kips) (Notes 3, 4)	Allowable Shear Load, $\emptyset V_n$ = $.55 \times \emptyset T_n$ (Kips) (Notes 3, 4)
1/4	0.015	1.28	0.70
3/8	0.050	4.25	2.34
1/2	0.103	8.76	4.82
5/8	0.176	14.97	8.23
3/4	0.274	23.30	12.82
7/8	0.390	33.17	18.24
1	0.523	44.48	24.46
1-1/4	0.864	73.48	40.42

NOTES:

1. Bolt sizes tabulated above include a corrosion allowance of 1/16" total on the diameter.

2. $\text{Area} = 0.7854 \left[(D - .062) - \frac{0.9743}{n}\right]^2$

3. Allowable tension and shear loads are for Drillco Maxi-bolts, F_y = 105 ksi.

4. $\frac{T_u}{\emptyset T_n} + \frac{V_u}{\emptyset V_n} \leq 1.00$

TABLE 10C-15

ULTIMATE TENSILE CAPACITY (DRILLCO MAXI-BOLTS)
(For Bolt Embedment)

Dia. D (in)	Tensile Stress Area A_t (in^2) (Note 1)	Tensile Capacity (for Concrete Design) F_{ut} = 125 ksi $T_u = A_t F_{ut}$ (kips) (Note 2)
1/4	0.049	6.12
3/8	0.110	13.75
1/2	0.142	17.75
5/8	0.226	28.25
3/4	0.334	41.75
7/8	0.462	57.75
1	0.606	75.75
1-1/4	0.969	121.12

NOTES:

1. Refer to AISC Manual, Ninth Edition, p. 4-147.

2. Ultimate tensile capacities are for Drillco Maxi-Bolts.

TABLE 10C-16

REINFORCING STEEL REQUIREMENTS (DRILLCO MAXI-BOLTS)

Reinforcing steel areas required when concrete effective stress area is not sufficient to develop tensile, bursting or shear capacity of the bolt.

Dia. D (in)	Tension $A_s = \frac{T_u}{0.9\ F_y}$	Bursting $A_s = \frac{0.25T_u}{0.9\ F_y}$	Shear $A_s = \frac{0.55T_u}{0.6\ F_y}$
1/4	.11	.03	.09
3/8	.25	.06	.21
1/2	.33	.08	.27
5/8	.52	.13	.43
3/4	.77	.19	.64
7/8	1.07	.27	.88
1	1.40	.35	1.16
1-1/4	2.24	.56	1.85

F_y = 60 ksi, yield stress of reinforcement, ASTM A615, grade 60.
T_u values from Table 10C-15.

NOTES:

1. 1988 UBC Section 2607(k)3D requires a minimum of 2-#4 ties or 3-#3 ties around anchor bolts within the top five inches of the pier.

2. Reinforcing steel requirements are for Drillco Maxi-Bolts.

TABLE 10C-17

SUMMARY OF BASIC BOLT PARAMETERS ($f_c' = 4$ ksi)

Material	F_y	F_{ut}	L_d	m_t	m_b	m_v
ASTM A36	36	58	7.37d	8.17d	3.56d	8.53d
ASTM A307	--	60	7.37d	8.17d	3.56d	8.53d
ASTM A193 (B8)	30	75	8.48d	9.28d	4.04d	9.70d
CS Weld Studs	50	55	7.16d	7.96d	3.46d	8.30d
SS Weld Studs	40	85	9.08d	9.88d	4.31d	10.32d
Drillco Maxi-Bolts	105	125	11.16d	11.96d	5.22d	12.52d

NOTES:

$$m_t = d\sqrt{\frac{F_{ut}}{13.867\sqrt{f_c'}} + 0.64}$$

$$L_d = m_t - 0.8d$$

$$m_b = d\sqrt{\frac{F_{ut}}{72.5\sqrt{f_c'}}}$$

$$m_v = d\sqrt{\frac{F_{ut}}{12.61\sqrt{f_c'}}}$$

where, F_{ut} and f_c' values are in psi

TABLE 10C-18

DRILLCO MAXI-BOLT TENSIONING TORQUE

BOLT DIA. (inch)	TORQUE (foot pounds)
1/4	9-12
3/8	40-44
1/2	80-85
5/8	185-190
3/4	345-350
1	645-650
1-1/4	1470-1475

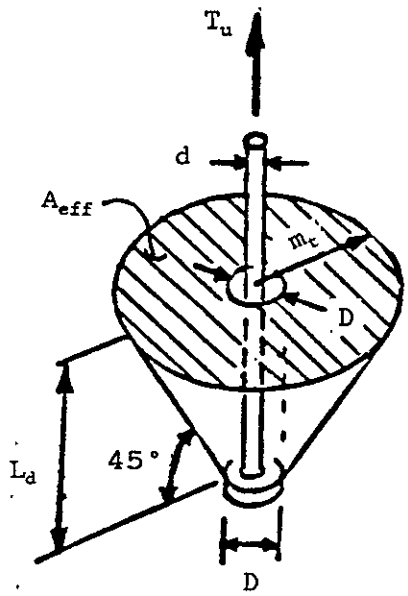

ultimate strength of anchor bolt

$T_u = F_{ut}A_t$

effective concrete stress area to resist pullout

$A_e = \pi m_t^2 - \pi D^2/4$

concrete design strength

$P_c = A_e \; 4 \; \phi [f_c']^{1/2}$

Equating T_u and P_c:

$F_{ut}A_t = [\pi m_t^2 - \pi D^2/4] \; 4 \; \phi [f_c']^{1/2}$

Substituting these approximations:

$A_t = 0.75[\pi d^2/4]$, $D = 1.6d$, $\phi = 0.65$

We have:

$m_t = d \; [\; F_{ut}/13.867[f_c']^{1/2} + 0.64]^{1/2}$

For: $f_c' = 4{,}000$ psi
$F_{ut} = 58{,}000$ psi (A36, A307 bolts)

We find that:

$m_t = 8.17d$ and $L_d = m_t - 0.8d = 7.37d$

FIGURE 10C-1
FULL CONE PROJECTED TENSION STRESS AREA
(isolated bolt w/o any edge effects)

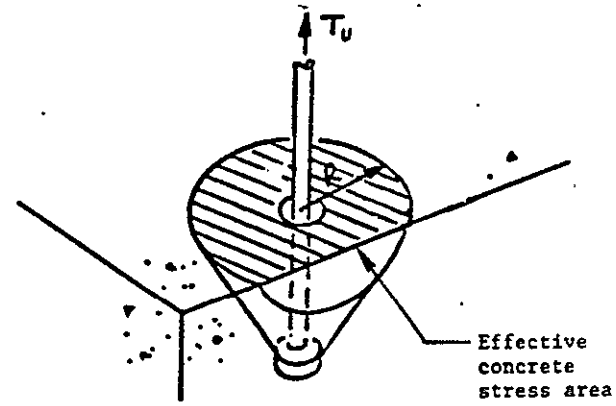

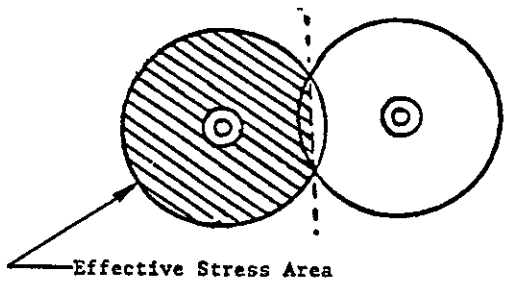

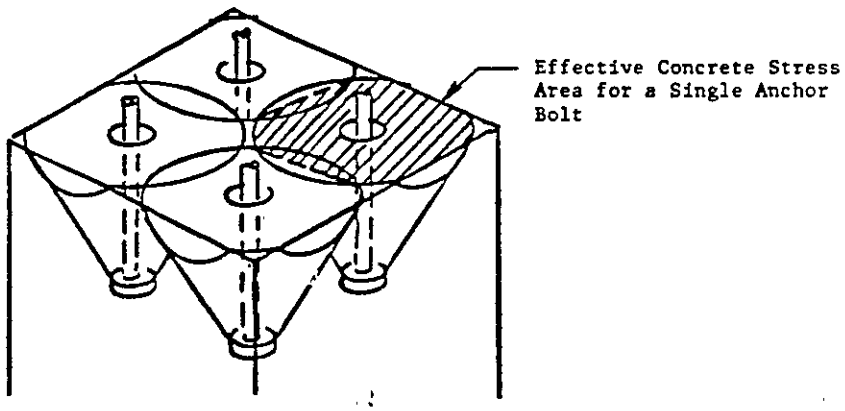

FIGURE 10C-2
REDUCED EFFECTIVE TENSILE STRESS AREA

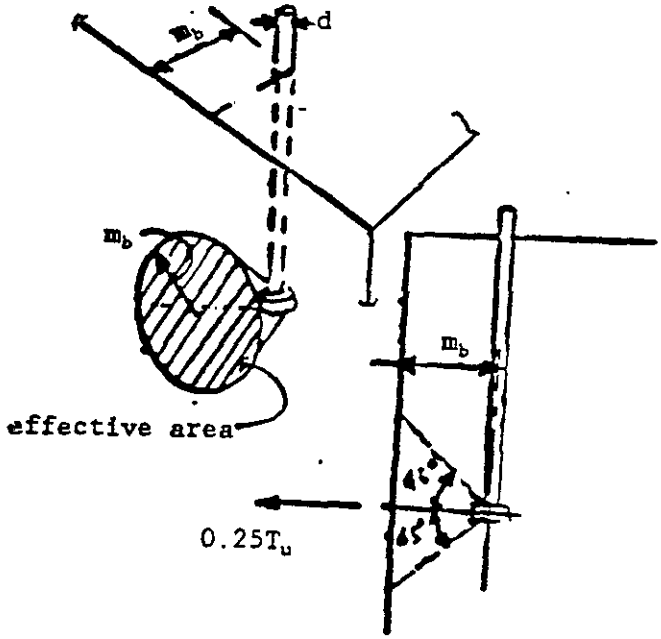

ultimate bursting force due to tension in bolt

$$T_{ub} = 0.25\ F_{ut}A_t$$

effective concrete stress area to resist bursting

$$A_e = \pi m_b^2$$

concrete design strength

$$P_c = A_e\ 4\ \phi[f_c']^{1/2}$$

Equating T_{ub} and P_c:

$$.25\ F_{ut}A_t = (\pi m_b^2)\ 4\ \phi[f_c']^{1/2}$$

Substituting:

$$A_t = 0.75[\pi d^2/4], \qquad \phi = 0.85$$

Minimum edge distance to prevent lateral bursting:

$$m_b = \frac{d[F_{ut}]^{1/2}}{[72.5[f_c']^{1/2}]^{1/2}}$$

For: $f_c' = 4{,}000$ psi
$F_{ut} = 58{,}000$ psi
(A36, A307 bolts)

We find that:

$$m_b = 3.56d$$

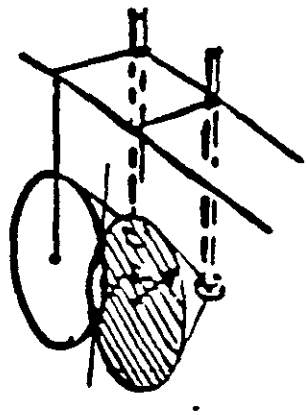

Reduced Effective Bursting Stress Area

FIGURE 10C-3
FULL CONE PROJECTED BURSTING STRESS AREA
(isolated bolt w/o any edge effects)

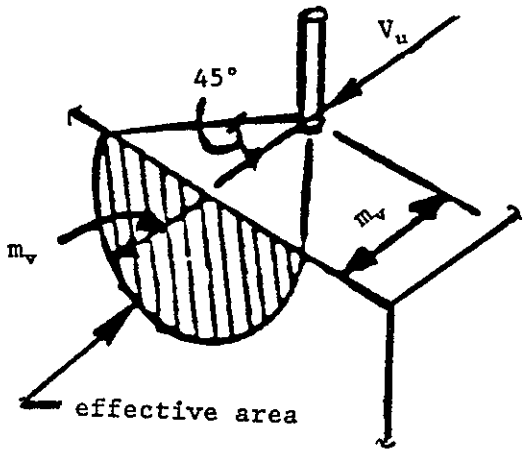

ultimate shear strength of the anchor bolt

$V_u = .55\ F_{ut}A_t$

effective concrete stress area to resist lateral pullout

$A_e = \pi m_v^2/2$

concrete design strength

$P_c = A_e\ 4\ \phi[f_c']^{1/2}$

Equating V_u and P_c:

$.55\ F_{ut}A_t = (\pi m_v^2/2)\ \ 4\ \phi[f_c']^{1/2}$

Substituting:

$A_t = 0.75[\pi d^2/4], \qquad \phi = 0.65$

Minimum edge distance to prevent shear failure:

$$m_v = \frac{d[F_{ut}]^{1/2}}{[12.61[f_c']^{1/2}]^{1/2}}$$

For: $f_c' = 4{,}000$ psi
$F_{ut} = 58{,}000$ psi
(A36, A307 bolts)

We find that:

$m_v = 8.53d$

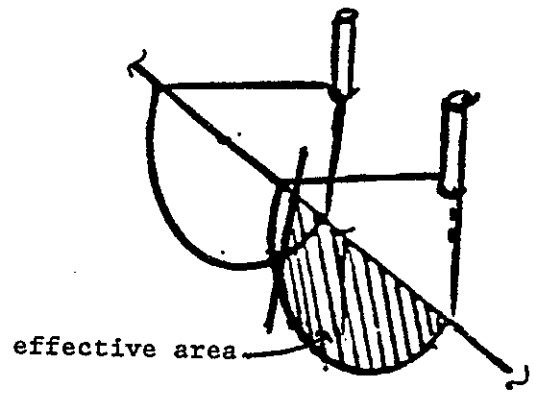

Reduced Effective Shear Stress Area

FIGURE 10C-4
FULL CONE PROJECTED LATERAL SHEAR STRESS AREA
(isolated bolt w/o any edge effects)

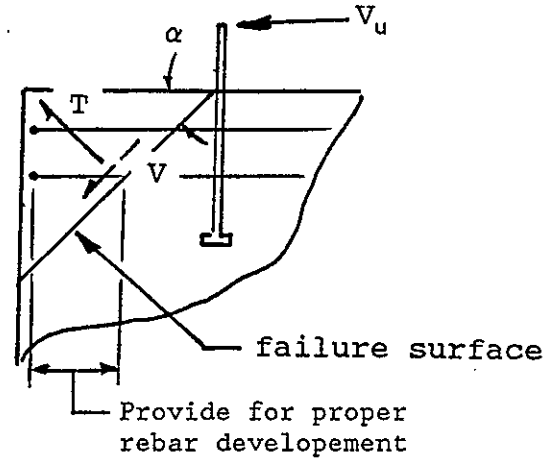

$V_u = .55T_u$ $\alpha = 45°$ $\mu = 1.4$ (see note)

Area of reinforcement required to resist loads across the failure surface:

(tension) $A_{st} = \dfrac{T}{\phi\ F_y \mathrm{Sin}\alpha} = \dfrac{V_u \mathrm{Sin}\alpha}{\phi\ F_y \mathrm{Sin}\alpha} = \dfrac{V_u}{\phi\ F_y}$

(Shear) $A_{sv} = \dfrac{V}{\phi(\mu \mathrm{Sin}\alpha + \mathrm{Cos}\alpha)F_y} = \dfrac{V_u \mathrm{Sin}\alpha}{\phi(\mu \mathrm{Sin}\alpha + \mathrm{Cos}\alpha)F_y} = \dfrac{V_u}{2.4\ \phi\ F_y}$

Combining:

$$A_s = A_{st} + A_{sv} = \frac{V_u}{\phi\ F_y} + \frac{V_u}{2.4\ \phi\ F_y} = \frac{1.42V_u}{\phi\ F_y}$$

Substituting for V_u and ϕ: ($\phi = .85$)

$$A_s = \frac{.55T_u}{0.6F_y}$$

NOTE: For monolithically placed concrete the shear friction value (μ) is taken to be 1.4. This is per ACI 349-85, Section 11.7.

FIGURE 10C-5
SHEAR REINFORCEMENT TO PREVENT LATERAL PULLOUT

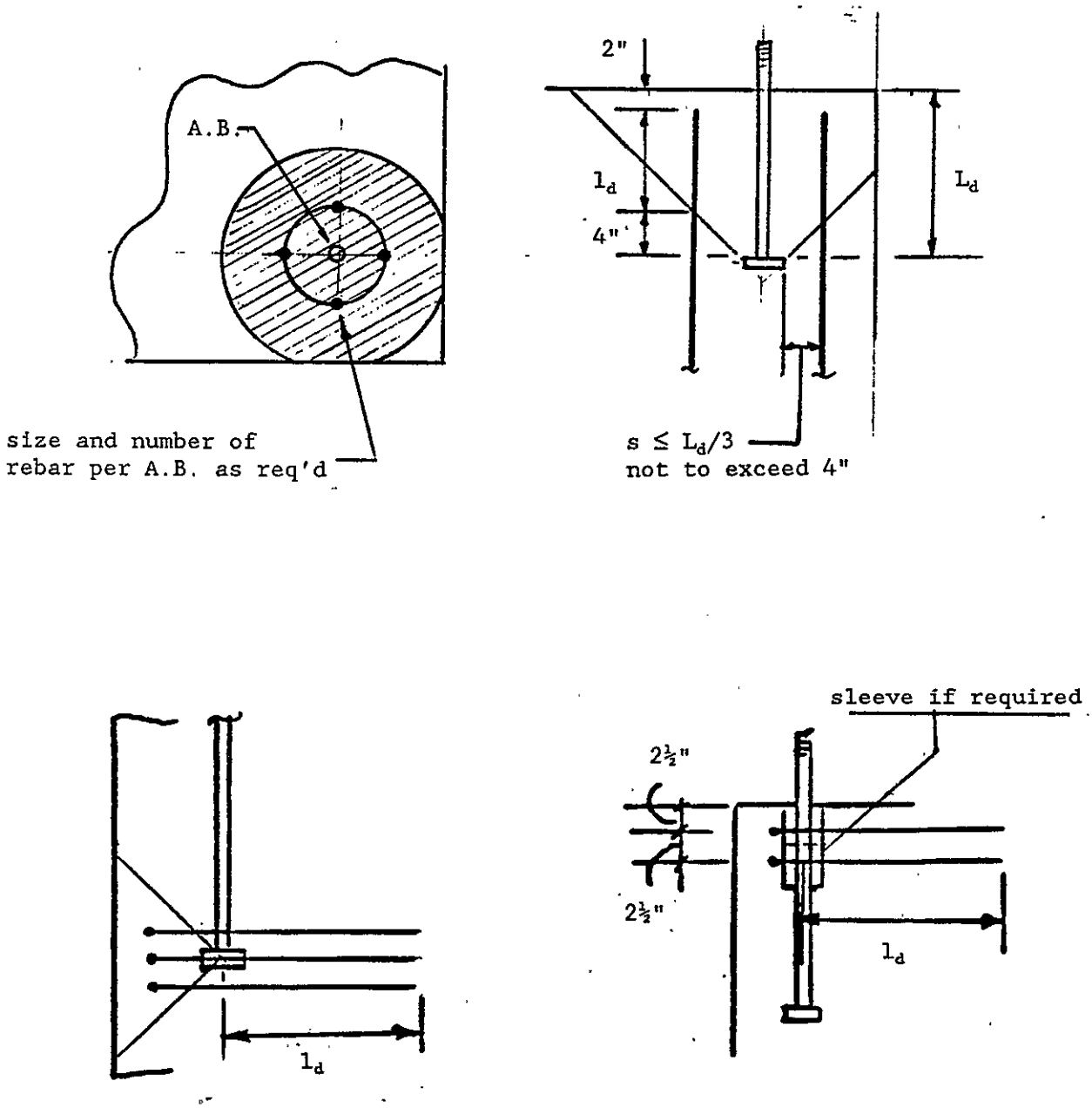

FIGURE 10C-6
PLACEMENT OF REINFORCEMENT TO PREVENT ANCHOR BOLT PULLOUT

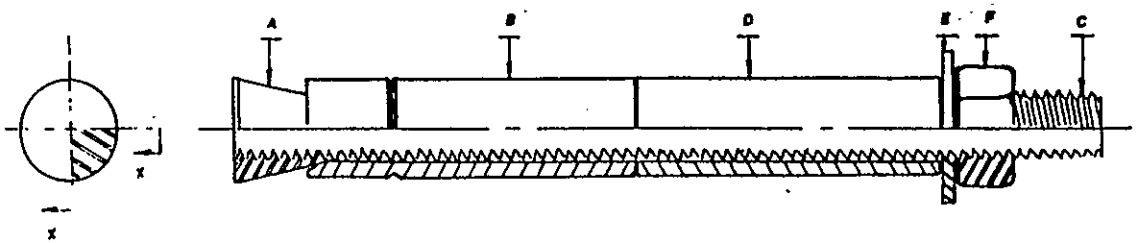

A.	Conical Nut	ASTM A 193 Grade B7	UNC Series Class 2B fit for 1/4", 3/8", 1/2", 5/8" and 3/4". UN 8 Pitch Series Class 2B fit for sizes 1" and larger.
B.	Expansion Sleeve	ASTM A 513 Type 5	ERW DOM Tubing.
C.	Threaded Stud Bolt	ASTM A 193 Grade B7	UNC Series Class 2A fit for 1/4", 3/8", 1/2", 5/8", and 3/4". UN 8 Pitch Series Class 2A fit for sizes 1" and larger.
D.	Distance Tube	ASTM A 513 Type 5	ERW DOM Tubing.
E.	Washer	ASTM A 325	Hardened round flat washer.
F.	Heavy Hex Nut	ASTM A 194 Grade 2H	UNC Series Class 2B fit for 1/4", 3/8", 1/2", 5/8", and 3/4". UN 8 Pitch Series Class 2B fit for sizes 1" and larger.

Plating to QQ-Z-325c Type II Class 3.

FIGURE 10C-7
DRILLCO MAXI-BOLT ASSEMBLY DETAILS

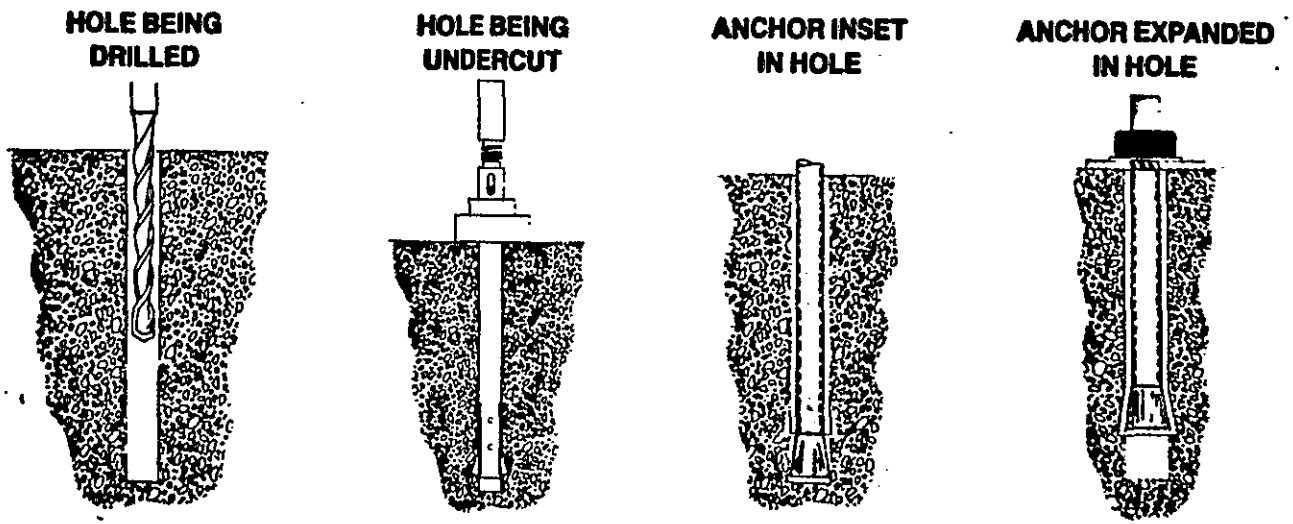

FIGURE 10C-8
DRILLCO MAXI-BOLT INSTALLATION DETAILS

THIS PAGE INTENTIONALLY
LEFT BLANK

STRUCTURAL AND CIVIL BASIS FOR DESIGN

APPENDIX 10D

HVAC DUCTWORK SYSTEMS DESIGN

10D.1 GENERAL

The purpose of Appendix 10D is to provide structural engineering design criteria for the heating, ventilation and air conditioning (HVAC) ductwork systems.

10D.2 CLASSIFICATION OF HVAC SYSTEMS

All HVAC systems will be identified by Safety Class by HVAC Engineering. A description of each Safety Class is provided in Section 10.3.1.

All HVAC systems will be considered to be system Class 1 per SMACNA (ref. 10D.1 and 10D.2) unless specified otherwise by HVAC Engineering.

10D.3 DESIGN LOADS

10D.3.1 GENERAL

HVAC ductwork systems will be designed to resist the loads defined below and the load combinations and allowable stresses defined in Section 10D.4. Applicable requirements from the PDG HVAC Engineering and Design Basis, Section 6.0 will be incorporated.

10D.3.2 NORMAL OPERATING LOADS

10D.3.2.1 Dead Load (D)

The dead load to be assumed in design will consist of the weight of steelwork and all material permanently fastened thereto or supported thereby.

The effective uniformly distributed duct dead load will include the weight of the duct, the reinforcements, the joints and the registers. This load will be calculated as follows.

For rectangular steel ducts:

$$w = 2(b+h)[(0.283t) + \frac{(1.75\ mr)}{L} + i](1.1) + \frac{nR}{L}$$

For circular steel ducts:

$$w = 2\pi D[(0.283t) + \frac{(1.75\ mr)}{L} + i](1.1) + \frac{nR}{L}$$

where:

b = Max. width of duct for the span (in.)

h = Max. height of duct for the span (in.)

t = Duct panel thickness (in.)

m = No. of reinforcements and joints in the span (one flange joint is to be considered equivalent to two reinforcements).

r = Larger of the weight of the reinforcing angle or the flange angle (lb/in)

L = Support spacing (in.)

i = Weight of duct insulation or fireproofing if applicable (lb/in^2)

n = No. of registers in the span.

R = Weight of the register (lbs.)

D = Max. duct diameter in the span (in.)

w = Uniformly distributed load (lb/in.)

The values 0.283 (lb/in^3), 1.75, and 1.1 respectively are the density of steel, a factor to take into account the weight of the bolts in the joints, and an arbitrary factor to account for miscellaneous attachments to the duct.

10D.3.2.2 Live Load (L)

Live load for plenums and large ductwork could occur during construction or maintenance. It will be considered as a single concentrated load of 300 lbs over a 2 foot square area or a uniform distributed load of 20 psf. Application of these loads will be considered on a case by case basis.

10D.3.2.3 Operating Pressure (p_o)

p_o = Maximum change in pressure (relative to atmospheric) under normal operating conditions.

To be obtained from HVAC Engineering on a system by system basis.

10D.3.3 SEVERE ENVIRONMENTAL LOADS

10D.3.3.1 Earthquake, UBC (E_u)

See Section 10.4.3.3 and Section 10A.2.1.

10D.3.3.2 Upset/Shutdown Pressure (p_s)

p_s = Maximum change in pressure (relative to atmospheric) generated by upset and shutdown conditions of the system.

To be obtained from HVAC Engineering on a system by system basis.

10D.3.4 EXTREME ENVIRONMENTAL LOADS

10D.3.4.1 Earthquake, DBE (E_d)

See Section 10.4.4.1 and Section 10A.2.7.

10D.3.4.2 Tornado, DBT (W_t)

No DBT loading is required for non-reactor facilities per Section 10.2.4 document.

10D.3.4.3 Explosion Pressure (p_e)

No explosion pressures are to be considered in the design.

10D.3.5 TEMPERATURE DIFFERENTIAL (T)

When applicable, the effects of temperature differential will be considered in the design of plenums and ductwork systems unless provisions are made to allow free movement of the duct during thermal expansion or contraction.

These provisions could be provided by: a) properly locating the longitudinally restraining supports so that free movement of the duct on each side is allowed, b) the use of duct turns and elbows which increase the flexibility of the system, c) consideration of inherent flexibility at the duct joint (gasket flexibility, etc.) or d) use of expansion joints for critical systems.

10D.4 LOAD COMBINATIONS AND ALLOWABLE STRESSES

When the structural effects of T are significant, they will be included in the following load combinations.

10D.4.1 SAFETY CLASS 3 AND 4 SYSTEMS

In the design of Safety Class 3 and 4 duct systems, the code allowable stress (AS) will not be less than that required by the following equations.

a. $AS = D + L$
b. $AS = D + p_o$
c. $1.33\ AS = D + p_o + E_u$
d. $1.33\ As = .85D + p_o + E_u$
e. $1.33\ AS = D + p_s$

10D.4.2 SAFETY CLASS 1 AND 2 SYSTEMS

The code allowable stress (AS) will not be less than that required by the following equations.

a. $AS = D + L$
b. $AS = D + p_o$
c. $1.33\ AS = D + p_s$
d. $1.33\ AS = D + p_o + E_u$
e. $1.33\ AS = .85D + p_o + E_u$
f. $1.7\ AS = 1.2D + p_o + E_d$
g. $1.7\ AS = .8D + p_o + E_d$

10D.5 ANALYSIS AND DESIGN OF RECTANGULAR DUCTS

10D.5.1 ANALYSIS OF DUCT PANELS

10D.5.1.1 Calculation of Design Pressure Capacity, p_c

Capacity of duct panels to resist internal pressure, dead weight, and seismic forces will be evaluated following the procedures described in SMACNA (ref. 10D.2).

The method involves calculating the maximum net pressure on any of the duct panels and determining the duct thickness and stiffener spacing required by using Tables 10D-1 through 10D-5. These tables are based on SMACNA tables for system Class 1 ducts as modified below.

Tabulated design pressure capacities are expressed as inches of water gage.

The basic assumption used by SMACNA is that each of the four sides of the duct acts as an independent two-dimensional panel not interacting with the rest of the system. Two separate modes of behavior are considered.

Mode A: The panel is considered as being continuous and of infinite length supported on equally spaced supports (the stiffeners) with no possibility of change in overall length of

the panel. A practical representation of this is a panel fixed on two opposite sides (along the stiffener) and free on the other two opposite sides (the duct). The analysis is based on Timoshenko's theory of plates (Ref. 10D.3) and takes into account the effects of large displacements and diaphragm stresses.

The capacity of the plate in this mode is defined as the pressure (p_A) which causes the total bending and tensile stresses in the panel equal to 24 ksi. The corresponding deflection associated with this stress is denoted by δ_A.

Mode B: The panel is considered as a rectangular plate fixed on two opposite sides (along the stiffener) and hinged on the other two opposite sides (duct edges). Based on the Timoshenko's plate theory, the pressure capacity (p_B), and the corresponding deflection (δ_B) associated with a maximum stress due to bending and tension of 24 ksi, are then calculated.

The procedure used by SMACNA (ref. 10D.2) to determine the pressure capacity for a particular duct geometry is shown below.

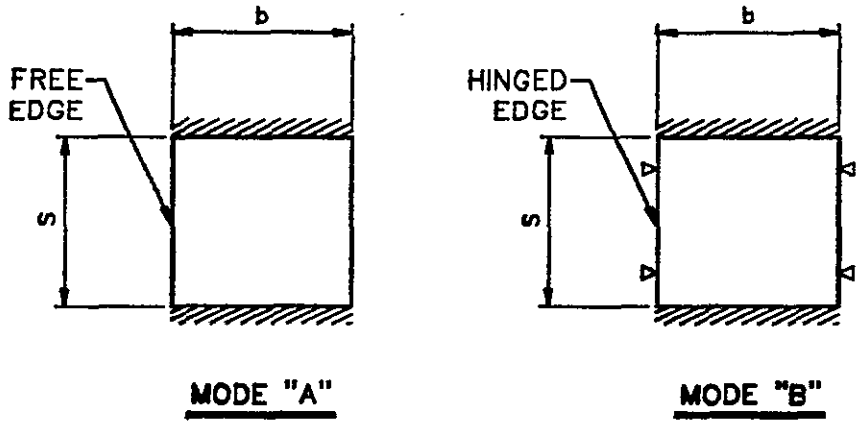

b = PANEL WIDTH
S = STIFFENER SPACING

a) If $S \leq b$, mode "A" is found to control the design in all cases.

Pressure capacity, $p = p_A$
Maximum deflection = δ_A

b) If S > b, the following two cases are evaluated:

In the first case if $\delta_B < \delta_A$, an approximate estimate is made of the pressure capacity ($p_A{}^*$)of the plate in mode "A" due to a maximum deflection δ_B as follows:

$$p_A^* = p_A \cdot \frac{\delta_B}{\delta_A}$$

then,

Pressure capacity, p = greater of p_A^* or p_B
Maximum deflection = δ_B

In the second case if $\delta_b > \delta_a$, the capacity (p_B^*) of the plate deformed in mode "B" is computed for a maximum deflection δ_A as follows:

$$p_B^* = p_B \cdot \frac{\delta_A}{\delta_B}$$

then,

Pressure capacity, p = greater of p_A or p_B^*
Maximum deflection = δ_A

Thus, one can determine the pressure capacity (p) of a plate given the length of stiffener or the duct width (b), the spacing (S) of the stiffeners and the thickness (t) of the plate.

Note that the SMACNA (ref. 10D.2) design tables for pressure capacity and maximum deflection are based on a maximum allowable stress of 24 ksi. Therefore, design pressure capacity for the AISC allowable tensile stress of 21 ksi will be determined as follows:

Design Pressure Capacity, $p_c = p \left(\frac{21.0}{24.0}\right) = 0.875\ p$

where,

p = Pressure Capacity per SMACNA (ref. 10D.2) design tables for a given b, S and t.

Design pressure capacities (p_c) are given in Table 10D-1 through 10D-5.

10D.5.1.2 <u>Equivalent Pressure Loads</u> (p_{eq})

The total equivalent pressure (p_{eq}) on an individual duct panel will be determined by combining the dead, live (when applicable), seismic and internal pressure loads in accordance with the combinations specified in Section 10D.4.0.

Various combinations of loadings will be considered to determine the maximum value for the total equivalent pressure. The effects of other loads not specifically mentioned above will be considered as applicable. The total equivalent pressure will be expressed as inches of water gage.

The maximum total equivalent pressure on the duct panel will be less than the design pressure capacity estimated in Section 10D.5.1.1.

10D.5.2 ANALYSIS OF RECTANGULAR DUCT AS A BEAM

The duct is analyzed as a beam spanning between its supports. The stresses developed in the duct panels due to the dead and seismic loads will be evaluated based on the provisions of AISI.

10D.5.2.1 Combined Stresses

The stresses due to bending moments and axial loads are maximum at the duct corners. To account for the effect of duct internal pressure on the corner stresses, the AISI interaction equations will be modified as follows:

For compression failure,

$$\frac{f_{cb}}{0.6F_y} + \frac{P}{P_a} + \frac{C_{mx}}{M_{ax}}\frac{M_x}{A_x} + \frac{C_{my}}{M_{ay}}\frac{M_y}{A_y} \leq 1.0 \qquad \text{(Eq. 10D-1)}$$

when $P/P_a \leq 0.15$, the following formula may be used in lieu of the above equation:

$$\frac{f_{cb}}{0.6Fy} + \frac{P}{P_{ao}} + \frac{M_x}{M_{ax}} + \frac{M_y}{M_{ay}} \leq 1.0 \qquad \text{(Eq. 10D-2)}$$

For tension failure,

$$\frac{P_{eq}}{P_c} + \frac{P}{P_t} + \frac{M_x}{M_{ax}} + \frac{M_y}{M_{ay}} \leq 1.0 \qquad \text{(Eq. 10D-3)}$$

(Note: The above equations are general. Refer to load combinations, Section 10D.4, to determine the applicability of each component.)

where,

f_{cb} = Duct corner stresses due to internal pressure as calculated per Section 10D.5.2.1.4

P = Applied axial load, i.e., dead weight and vertical seismic for vertical ducts, horizontal seismic for horizontal ducts

P_a = Allowable axial load determined in accordance with Section 10D.5.2.1.1

P_{ao} = Allowable axial load determined in accordance with Section 10D.5.2.1.1, with $F_n = F_y$.

P_t = Allowable axial tension
= $0.6\ F_y\ A_{DUCT}$

A_{DUCT} = Full duct cross section

M_x, M_y = Applied moments with respect to the centroidal axes of the duct section

M_{ax}, M_{ay} = Allowable moments about the centroidal axes determined in accordance with Section 10D.5.2.1.2

$\frac{1}{A_x}$, $\frac{1}{A_y}$ = Magnification factors = $\frac{1}{[1-(\Omega_c\ P/P_{cr})]}$

Ω_c = Factor of safety used in determining P_a (Section 10D.5.2.1-1)

$P_{cr} = \frac{\pi^2 E\ I_b}{(K_b\ L_b)^2}$

I_b = Moment of inertia of the full cross section about the axis of bending

L_b = Support spacing

K_b = Effective length factor in the plane of bending. Use a value of 1.0

C_{mx}, C_{my} = 1.0 (Conservatively)

10D.5.2.1.1 <u>Calculation of P_a</u>

The allowable axial load, P_a, will be calculated as follows:

$$P_a = P_n/\Omega_c$$

where,

$$P_n = A_e\ F_n$$

A_e = Effective area at the stress F_n. See Section 10D.5.2.1.3 for calculation of A_e

$F_n = F_y\ (1-F_y/4F_e)$, if $Fe > Fy/2$

Various combinations of loadings will be considered to determine the maximum value for the total equivalent pressure. The effects of other loads not specifically mentioned above will be considered as applicable. The total equivalent pressure will be expressed as inches of water gage.

The maximum total equivalent pressure on the duct panel will be less than the design pressure capacity estimated in Section 10D.5.1.1.

10D.5.2 ANALYSIS OF RECTANGULAR DUCT AS A BEAM

The duct is analyzed as a beam spanning between its supports. The stresses developed in the duct panels due to the dead and seismic loads will be evaluated based on the provisions of AISI.

10D.5.2.1 Combined Stresses

The stresses due to bending moments and axial loads are maximum at the duct corners. To account for the effect of duct internal pressure on the corner stresses, the AISI interaction equations will be modified as follows:

For compression failure,

$$\frac{f_{cb}}{0.6F_y} + \frac{P}{P_a} + \frac{C_{mx}}{M_{ax}}\frac{M_x}{A_x} + \frac{C_{my}}{M_{ay}}\frac{M_y}{A_y} \leq 1.0 \qquad \text{(Eq. 10D-1)}$$

when $P/P_a \leq 0.15$, the following formula may be used in lieu of the above equation:

$$\frac{f_{cb}}{0.6Fy} + \frac{P}{P_{ao}} + \frac{M_x}{M_{ax}} + \frac{M_y}{M_{ay}} \leq 1.0 \qquad \text{(Eq. 10D-2)}$$

For tension failure,

$$\frac{p_{eq}}{p_c} + \frac{P}{P_t} + \frac{M_x}{M_{ax}} + \frac{M_y}{M_{ay}} \leq 1.0 \qquad \text{(Eq. 10D-3)}$$

(Note: The above equations are general. Refer to load combinations, Section 10D.4, to determine the applicability of each component.)

where,

f_{cb} = Duct corner stresses due to internal pressure as calculated per Section 10D.5.2.1.4

P = Applied axial load, i.e., dead weight and vertical seismic for vertical ducts, horizontal seismic for horizontal ducts

P_a = Allowable axial load determined in accordance with Section 10D.5.2.1.1

P_{ao} = Allowable axial load determined in accordance with Section 10D.5.2.1.1, with $F_n = F_y$.

P_t = Allowable axial tension
$= 0.6\ F_y\ A_{DUCT}$

A_{DUCT} = Full duct cross section

M_x, M_y = Applied moments with respect to the centroidal axes of the duct section

M_{ax}, M_{ay} = Allowable moments about the centroidal axes determined in accordance with Section 10D.5.2.1.2

$\frac{1}{A_x}$, $\frac{1}{A_y}$ = Magnification factors $= \frac{1}{[1-(\Omega_c\ P/P_{cr})]}$

Ω_c = Factor of safety used in determining P_a (Section 10D.5.2.1-1)

$P_{cr} = \frac{\pi^2 E\ I_b}{(K_b\ L_b)^2}$

I_b = Moment of inertia of the full cross section about the axis of bending

L_b = Support spacing

K_b = Effective length factor in the plane of bending. Use a value of 1.0

C_{mx}, C_{my} = 1.0 (Conservatively)

10D.5.2.1.1 <u>Calculation of P_a</u>

The allowable axial load, P_a, will be calculated as follows:

$$P_a = P_n/\Omega_c$$

where,

$$P_n = A_e\ F_n$$

A_e = Effective area at the stress F_n. See Section 10D.5.2.1.3 for calculation of A_e

$$F_n = F_y\ (1-F_y/4F_e),\ \text{if } Fe > Fy/2$$

$= F_e$, if $F_e \leq F_y/2$

$$F_e = \frac{\pi^2 E}{(KL/r)^2}$$

E = Modulus of elasticity

K = Use 1.0

L = Support spacing

r = Radius of gyration of the full, unreduced duct cross section

Ω_c = Factor of safety for axial compression = 1.92, except when section wall thickness is greater than 0.09 inches and $F_e > Fy/2$. For this case:

$\Omega_c = 5/3 + 3R/8 - R^3/8.$

where,

$$R = \sqrt{(Fy/2Fe)}$$

10D.5.2.1.2 Calculation of M_{ax} and M_{ay}

The allowable moment M_a for bending in the defined directions, x&y, will be calculated as follows:

$M_a = M_n/\Omega_f$

where,

$M_n = S_e F_y$

S_e = Elastic section modulus of the effective section calculated according to Section 10D.5.2.1.3

(Use section modulus at the compression zone to determine M_{ax} and M_{ay} in Equations 10D-1 and 10D-2. Use Section modulus at the tension zone for Equation 10D-3.

Ω_f = Factor of safety for bending = 1.67

10D.5.2.1.3 Effective Cross Section

In determining the effective cross sections to be used in equations of sections D.5.2.1.1 and D.5.2.1.2, it is necessary to determine the effective width of the elements of the cross section under compression. The effective widths and cross

sections for the duct under axial load and bending are shown in Figure 10D.1. Following the methods, described in AISI, will be used to calculate the effective widths:

$b_e = b$ when $\lambda \leq 0.673$
$b_e = \rho b$ when $\lambda > 0.673$

where,

b = Flat width of the compression element. Due to the smallness of the duct corner radiuses compared with the overall duct dimensions, the nominal duct width may be used for simplicity.

$\rho = (1-0.22/\lambda)/\lambda$

λ is a slenderness factor determined as:

$$\lambda = \left[1.052/\sqrt{K}\right]\left[b/t\right]\sqrt{f/E}$$

K = Plate buckling coefficient
= Use 4.0.

t = Duct sheet thickness (ref.10D.2.2).
= 0.0538" for 16 GA
= 0.0667" for 14 GA
= 0.0966" for 12 GA
= 0.1116" for 11 GA
= 0.1265" for 10 GA

f = Fy for flexural members. f = F_n as defined in Section 10D.5.2.1.1 for compression members.

Note:

For simplicity in calculations, the effective height of web h_e' (refer to Figure 10D-1) is set equal to b_e, the effective flange width. Review of the calculations in ref. 10D.3 reveals that the critical buckling stress for a simply supported rectangular plate under combined bending and compression is greater than the critical buckling stress for the same plate under compression only. Thus, the above assumption is conservative.

However, if a more exact analysis is required, provisions of AISI Section B2.3 could be used to obtain the intended results.

10D.5.2.1.4 Bending in the Duct Corners

The stresses developed at the duct corners (f_{cb}) due to the equivalent pressure loads, P_{eq} (per Section 10D.5.1.2), will be calculated as follows:

$$f_{cb} = \frac{M_c}{S_c}$$

where,

M_c = The moment at the duct corner due to the equivalent internal pressure, P_{eq}.

$$= \frac{q_c \times S^2}{8}$$

q_c = Uniform load at duct corner due to internal pressure.

$$= P_{eq} \sqrt{(b/2)^2 + (h/2)^2}$$

b and h = Nominal duct dimensions.

S = Stiffener spacing.

S_c = Section modulus of duct corner about axis X-X (see Figure 10D-3). Refer to 10D.5.2.1.3 for calculation of b_e. For simplicity and conservatism, set the effective height (h_e') equal to hb_e/b.

10D.5.2.2 Considerations for Shear

The shear force at any duct cross section (V) will not exceed the allowable shear, V_a, calculated as follows:

For $h/t \leq 1.38 \sqrt{EK_v/F_y}$,

$$V_a = 0.76t^2 \sqrt{K_v F_y E}, \quad \leq 0.4\ F_y(2ht)$$

For $h/t > 1.38 \sqrt{EK_v/F_y}$,

$$V_a = 1.06\ E\ K_v t^3/h$$

Where,

t = duct panel thickness
h = duct depth in the direction of loading
k_v = use 5.34

The interaction equation from AISI as modified below must also be satisfied:

$$\left(\frac{f_{cb}}{0.6Fy} + \frac{P}{P_{ao}} + \frac{M_x}{M_{ax}} + \frac{M_y}{M_{ay}}\right)^2 + \left(\frac{V}{V_a}\right)^2 \leq 1.0$$

Note: Refer to Sec. 10.D.5.2.1 for definition of terms.

10D.5.3 DESIGN OF STIFFENERS

The load transmitted to the stiffener from the duct sheet metal panel is assumed to have uniform intensity along the length of the stiffener. Following the criteria described in SMACNA, ref. 10D.2, the design uniform load (q) on the stiffener due to the design pressures will be determined as follows:

$q = p_{eq}\ S$; when $S/b \leq 2.0$

$q = (1.25 - 0.125\ S/b)\ (p_{eq}\ S) \leq p_{eq}\ S$; when $2 < S/b \leq 10$

where,

p_{eq}, S, b are as defined in Sections 10D.5.1.1 and 10D.5.1.2.

The dead and seismic loads due to the stiffener, if determined significant, will be included when calculating the design uniform load (q). The benefit of the sheet metal being welded to the stiffener in providing resistance to bending moment and deflection will be ignored.

The moments in the stiffeners as determined from ref. 10D.5 are as follows (see Figure 10D-4):

$$M_e \text{ (At ends)} = \frac{qb^2}{12} \cdot \frac{1 + K^3}{1 + K}$$

$$M \text{ (At center of long dim.)} = \frac{qX^2}{8} - M_e$$

$$M \text{ (At center of short dim.)} = \frac{qY^2}{8} - M_e$$

where,

X = Longer duct dimension.

Y = Shorter duct dimension.

K = Y/X.

Max. stiffener deflection will be computed and limited to 1/360 of the stiffener span (X, longer panel width).

The welds attaching the stiffeners to the duct will be designed to transfer the duct loads due to the equivalent internal pressure to the stiffener. The welds attaching the end flanges to the duct section will be designed to transfer the axial forces, shears and bending moments in the duct through the joint.

10D.5.4 SUMMARIZED DESIGN PROCEDURE FOR RECTANGULAR DUCTS

Given the design pressure loads and seismic requirements, the following steps may be taken in the design of a rectangular duct with known dimensions.

Step 1 - Based on the given pressure loads, enter Tables 10D-1 through 10D-5 to establish preliminary duct gage and stiffener spacing and determine the design pressure capacity (p_c).

Step 2 - Calculate the equivalent design pressure (p_{eq}) in accordance with Section 10D.5.1.1.

Step 3 - Compare the above equivalent design pressure (p_{eq}) with the design pressure capacity (p_c) determined in Step 1. If p_c is less than p_{eq} repeat steps 1 and 2.

Note:
Apply the appropriate capacity increase factors specified in Section 10D.4 to the design pressure capacity before comparing to the maximum equivalent design pressure.

Step 4 - Calculate the axial loads and bending moments in the duct due to the dead and seismic loads based on an initial value (L) for the support spacing.

Step 5 - Calculate the effective cross sections and duct capacities in the critical directions per Section 10D.5.2.1.1 through 10D.5.2.1.3.

Step 6 - Calculate the duct corner stresses per Section 10D.5.2.1.4.

Step 7 - Check the interaction equations of Section 10D.5.2.1 as applicable. If unity check is not met, revise one or more variables (i.e., duct gage, stiffener spacing, or support spacing) and repeat Steps 2 through 7.

Step 8 - Check the allowable shear and interaction equation of Sec. 10D.5.2.2. If the equation is not satisfied, revise one or more variables and recheck.

Step 9 - Calculate stiffener moments according to Section 10D.5.3.

Step 10 - Pick an initial stiffener size and check the stresses according to the provisions of AISC. If not adequate, increase size or decrease stiffener spacing and recheck.

10D.6 ANALYSIS AND DESIGN OF CIRCULAR DUCTS

10D.6.1 CALCULATION OF BUCKLING PRESSURE (p_b)

The calculation of the negative pressure is based on two criteria: a) yield stress of the duct material, b) the elastic stability of the duct which is dependent on the maximum unstiffened length of the duct. It is apparent that the designs obtained for negative pressure will govern the design of the duct.

The SMACNA (ref. 10D.1) tables for system Class 1 steel ducts will be used to determine the buckling pressure based on the duct thickness and stiffener spacing.

Note: All pressures are expressed as inches of water gage.

The SMACNA tables assume that buckling criterion controls the design of the duct. The buckling pressure (p_b) as determined by SMACNA is the smaller of the values calculated from the following two equations:

$$p_\infty = \frac{2E}{(1-\nu^2)} \left(\frac{t}{D}\right)^3 \times \frac{1}{\phi} \qquad \text{(Eq. 10.D-3)}$$

$$p_{short} = \frac{32}{9} E \left(\frac{D}{S}\right) \left(\frac{t}{D}\right)^2 \left[\frac{Z(t/D)^2}{36(1-\nu^2)^3}\right]^{1/4} \cdot \frac{1}{\phi} \qquad \text{(Eq. 10.D-4)}$$

where,

p_∞ = The buckling pressure of an infinitely long duct.

E = Modulus of elasticity.

ν = Poisson's ratio.

t = Duct thickness.

D = Duct diameter.

ϕ = Factor of safety.

= (52 + D)/14, as recommended by SMACNA where D is the duct diameter in inches.

p_{short} = Buckling pressure for short ducts.

Z = Factor depending on type of end constraints.

= $\left(\frac{\pi}{2}\right)^4$ as listed by SMACNA.

S = Max. stiffener spacing.

The factor of safety ϕ varies linearly with the diameter D of the duct, assuming a value of 4 for the small (4 in) duct and increasing to 8 for a large (60 in) duct. This safety factor is provided for lack of roundness, excesses in negative pressure due to particle accumulation in the duct, and other manufacturing or assembly imperfections and specifications tolerances.

If for a given maximum stiffener spacing S the buckling pressure p_{short} obtained from Eq. 10D-4 is larger than p_∞ from Eq. 10D-3, then the duct is not considered short and the buckling pressure p_b is that given by Eq. 10.D-3.

10D.6.2 ANALYSIS OF CIRCULAR DUCTS AS A BEAM

The stresses in the duct due to beam action will be evaluated. The duct is analyzed as a beam spanning between supports. The stresses developed in the duct panels due to the dead and seismic loads will then be calculated.

The stresses in the duct due to the bending moments will be calculated as follows:

$$f_b = \frac{M}{S_{DUCT}}$$

where,

M = Bending due to dead or seismic loads on the duct.

S_{DUCT} = Duct section modulus in bending.

= $0.25\pi\ D^2 t$

D = Duct diameter.

t = Duct thickness.

The axial stresses in the duct due to the dead weight and vertical seismic in case of the vertical duct and due to horizontal seismic in case of the horizontal duct will be calculated as follows:

$$f_a = \frac{P}{A_{DUCT}}$$

where,

P = Axial load in the duct due to weight or seismic forces.

A_{DUCT} = Full duct cross section area.

$= \pi Dt$

10D.6.3 ALLOWABLE STRESSES

The allowable stresses could be controlled by either yielding or buckling. SMACNA (ref. 10D.1) sets a limit of 10,000 psi for the allowable stress due to bending when the design is controlled by yielding. This value is applicable for both carbon and stainless steel material.

The allowable buckling stress is given by the following equation:

$$\sigma_{cr} = \frac{E}{5\sqrt{3(1-\nu^2)}} \cdot \frac{t}{D}$$

where,

σ_{cr} = Allowable buckling stress. This stress is taken as one-tenth of the theoretical buckling stress because of the coexistence of radial stresses, and because of experimental evidence indicating that actual buckling stresses are much lower than theoretical values.

One can obtain the threshold for the value of D/t above which buckling, rather than yielding, controls the value of the allowable stress. From the solution of these equations, the following results are obtained:

σ_{allow} = 10.0 ksi; when $(D/t) \leq 342$ (yielding controls)

$$\sigma_{allow} = \frac{E}{5\sqrt{3(1-\nu^2)}} \cdot \frac{t}{D} \quad \text{when } (D/t) > 342 \text{ (buckling controls)}$$

Circular ducts generally have small KL/r values (assuming support spacing of approximately 10 ft.). Considering the assumptions used in the calculation of σ_{allow} and for simplicity, the same allowable will be used for the stresses due to axial loads.

10D.6.4 INTERACTION EQUATIONS

The following interaction equation is to be used for the circular ducts:

$$\frac{p}{p_b} + \frac{f_a + f_b}{\sigma_{allow}} \leq 1.0$$

where,

p = The duct internal pressure.

p_b = Allowable buckling pressure calculated per Sec. 10D.6.1.

f_a, f_b = Total stresses in the duct due to axial loads and resultant bending moments. These loads may be due to the dead and/or seismic loads in different directions.

σ_{allow} = allowable stresses determined per Sec. 10D.6.3.

10D.6.5 DESIGN OF STIFFENERS

The design procedure recommended by SMACNA (ref. 10D.1) shall be used to determine the minimum moment of inertia (I_{MIN}) and the minimum cross section area (A_{MIN}) of the stiffeners:

$$I_{MIN} = 0.917 \frac{pSD^3}{E}$$

$$A_{MIN} = \frac{(52+D)}{14} \cdot \frac{pSD}{F_y}$$

where,

p = duct internal design pressure (psi)
S = stiffener spacing (in)
D = duct diameter (in)
F_y = stiffener yield stress (ksi)

The above formulas include a safety factor of 20 for the determination of "I_{MIN}", and a variable safety factor of (52+D)/14 for the design of "A_{MIN}". A greater safety factor is used in the calculation of "I_{MIN}" than for "A_{MIN}" because it is

essential for stiffeners not simply to prevent their failure, but to make them stiff enough to retain their shape under the applied loads.

The above formula for calculation of "A_{MIN}" is based on limiting the allowable axial stress to 0.5 F_y.

The welds attaching the stiffeners to the duct will be designed to transfer the duct loads due to the equivalent internal pressure to the stiffener. The welds attaching the end flanges to the duct section will be designed to transfer the axial forces, shears and bending moments in the duct through the joint.

10D.6.6 SUMMARIZED DESIGN PROCEDURE FOR CIRCULAR DUCTS

Given the design pressure loads and seismic requirements, the following steps may be taken in the design of a circular duct for a given diameter.

1. Using the duct diameter and the internal pressure, enter the SMACNA tables (ref. 10D.1, Pg. 4b-1 thru 4b-29) and pick a trial duct gage (t), and stiffener spacing (S).

   Set the allowable buckling pressure (p_b) equal to the pressure indicated at the top of referenced tables.

2. Calculate the stresses in the duct acting as a beam (f_a, f_b) due to axial loads and bending moments per Sec. 10D.6.2.

3. Calculate the allowable stress (σ_{allow}) per Sec. 10D.6.3.

4. Check the interaction equation defined in Sec. 10D.6.4. Depending on the result, you may want to modify one or more variables from Step 1 and repeat Steps 2 to 4 until satisfactory results are achieved.

5. Design the stiffener size per Sec. 10D.6.5.

10D.7 CALCULATION OF SEISMIC LOADS

Seismic loads will be determined for each of the three principle directions (vertical, transverse, and longitudinal).

The seismic loads for HWVP ducts will be determined as described in Section 10A.2.7. Seismic loads for Safety Class 1 and 2 ducts will be determined considering an in-structure-response-spectrum (ISRS). In order to determine the response of the duct due to the appropriate ISRS, the natural frequency of the duct system must be determined.

10D.7.1 SYSTEM FREQUENCY

For each direction (vertical, transverse and longitudinal), the fundamental system frequency, f_{SYS}, will be computed from the calculated fundamental duct frequency (f_{DUCT}) and the calculated fundamental support frequency (f_{SUPT}) as follows:

$$f_{SYS} = \frac{1}{\sqrt{\left(\frac{1}{f_{DUCT}}\right)^2 + \left(\frac{1}{f_{SUPT}}\right)^2}}$$

10D.7.2 DUCT FREQUENCY

The frequency of vibration of the duct will be computed assuming that the duct acts as a beam spanning between supports.

In the calculation of the duct stiffness, the moment of inertia will be based on the effective cross section (as determined per Section 10D.5.2.1.3) for rectangular ducts and the full cross section for circular ducts.

In the longitudinal direction (axial), the duct may be assumed as rigid, therefore a frequency of 25 hertz can be used for the purpose of calculations.

10D.7.3 SUPPORT FREQUENCY

The fundamental frequency of the duct support will be computed accounting for the tributary weight of the duct and the self weight of the support. Generally the duct support can be represented as a single degree of freedom system. Thus the fundamental frequency of the system can be found from the following equation:

$$f_{SUPT} = \frac{1}{2\pi}\sqrt{Kg/W}$$

where,

K = Stiffness of the support in the direction considered.

W = Tributary weight of the duct between support spacing L, plus the weight of the support.

g = gravitational acceleration

10D.8 BOLTING OF THE DUCT FLANGES

When a rectangular or circular duct is extended, each segment must be capable of transmitting its stresses to the segment to which it is connected. This will be accomplished by the use of bolts.

The forces in the bolts due to the axial load, bending moments and shear forces at the duct joint are to be calculated. The tensile forces in the bolts due to the duct internal pressure will also be included.

It should be noted that the effect of prying action needs to be considered in the development of bolt stresses due to the above loads.

The resultant bolt tension and shear stress should then be compared with the allowable stress as determined per the requirements of AISC Specification Chapter J, Sec. J3.

SMACNA (ref. 10D.1 and 10D.2) provides certain guidelines and recommendations for the design of duct flange bolting. The criteria adopted by "SMACNA" is more dependent on experience in the field than on a detailed analysis. Therefore consideration will be given to the recommendations provided in SMACNA.

TABLE 10D-1

RECTANGULAR DUCT

STIFFENER SPACING, S = 2 ft

MATERIAL GAGE	16	14	12	11	10
PANEL WIDTH b b(ft)	DESIGN PRESSURE CAPACITY, p_c[1] (IN INCHES WATER GAGE)				
1.0	15.2	19.4	52.0	70.4	90.5
1.5			30.0	36.5	42.8
2.0					
2.5					
3.0					
3.5					
4.0					
5.0					
6.0					
7.0					
8.0					
9.0					
10.0					
11.0					
12.0					
13.0					
14.0	15.2	19.4	30.0	36.5	42.8

Notes:

1. $p_c = 0.875\ p$ (See Section 10D.5.1.1b)

TABLE 10D-2

RECTANGULAR DUCT

STIFFENER SPACING, S = 3 ft

MATERIAL GAGE	16	14	12	11	10
PANEL WIDTH b(ft) b	DESIGN PRESSURE CAPACITY, p_c[1] (IN INCHES WATER GAGE)				
1.0	10.5	19.4	50.4	67.3	86.5
1.5	9.8	12.6	19.1	24.9	35.6
2.0				22.4	25.9
2.5					
3.0					
3.5					
4.0					
5.0					
6.0					
7.0					
8.0					
9.0					
10.0					
11.0					
12.0					
13.0					
14.0	9.8	12.6	19.1	22.4	25.9

Notes:

1. $p_c = 0.875\ p$ (See Section 10D.5.1.1b)

TABLE 10D-3

RECTANGULAR DUCT

STIFFENER SPACING, S = 4 ft

MATERIAL GAGE	16		12	11	10
PANEL WIDTH b(ft)	DESIGN PRESSURE CAPACITY, p_c[1] (IN INCHES WATER GAGE)				
1.0	10.5	19.4	50.2	67.0	86.2
1.5	7.4	9.3	17.2	24.9	35.6
2.0			13.8	16.3	18.6
2.5					
3.0					
3.5					
4.0					
5.0					
6.0					
7.0					
8.0					
9.0					
10.0					
11.0					
12.0					
13.0					
14.0	7.4	9.3	13.8	16.3	18.6

Notes:

1. $p_c = 0.875\ p$ (See Section 10D.5.1.1b)

TABLE 10D-4

RECTANGULAR DUCT

STIFFENER SPACING, S = 5 ft

MATERIAL GAGE	16	14	12	11	10
PANEL WIDTH b(ft) b	DESIGN PRESSURE CAPACITY, p_c[1] (IN INCHES WATER GAGE)				
1.0	10.5	19.4	50.2	67.0	86.2
1.5	5.8	7.3	17.2	24.9	35.6
2.0			10.9	12.7	15.9
2.5					14.6
3.0					
3.5					
4.0					
5.0					
6.0					
7.0					
8.0					
9.0					
10.0					
11.0					
12.0					
13.0					
14.0	5.8	7.3	10.9	12.7	14.6

Notes:

1. $p_c = 0.875\ p$ (See Section 10D.5.1.1b)

TABLE 10D-5

RECTANGULAR DUCT

STIFFENER SPACING, S = 6 ft

MATERIAL GAGE	16	14	12	11	10
PANEL WIDTH b(ft) b	DESIGN PRESSURE CAPACITY, p_c[1] (IN INCHES WATER GAGE)				
1.0	10.5	19.4	50.2	67.0	86.2
1.5	4.8	7.3	17.2	24.9	35.6
2.0		6.0	8.9	11.8	15.9
2.5				10.4	12.0
3.0					
3.5					
4.0					
5.0					
6.0					
7.0					
8.0					
9.0					
10.0					
11.0					
12.0					
13.0					
14.0	4.8	6.0	8.9	10.4	12.0

Notes:

1. $p_c = 0.875\ p$ (See Section 10D.5.1.1b)

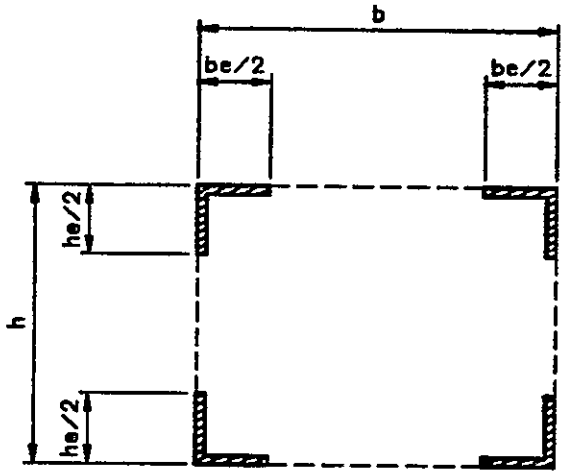

a) AXIAL LOAD
(LONGITUDINAL
COMPRESSION)

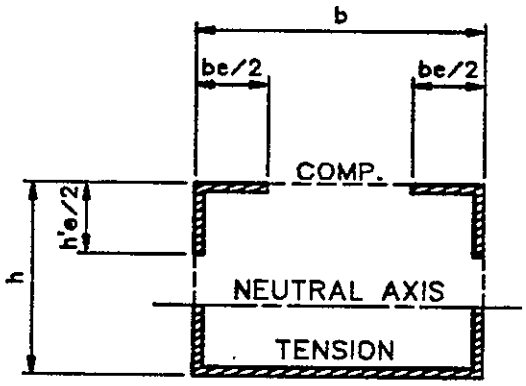

b) BENDING IN THE HORIZ PLANE
(ABOUT HORIZ AXIS)
(LET h'e = be)

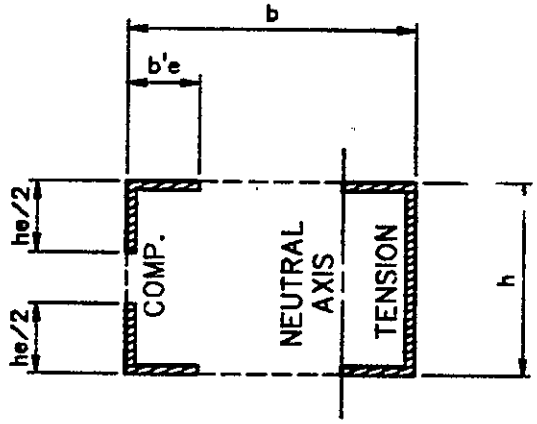

c) BENDING IN THE HORIZ PLANE
(ABOUT VERT AXIS)
(LET b'e = he)

FIGURE 10D-1
Effective Cross Sectional Area

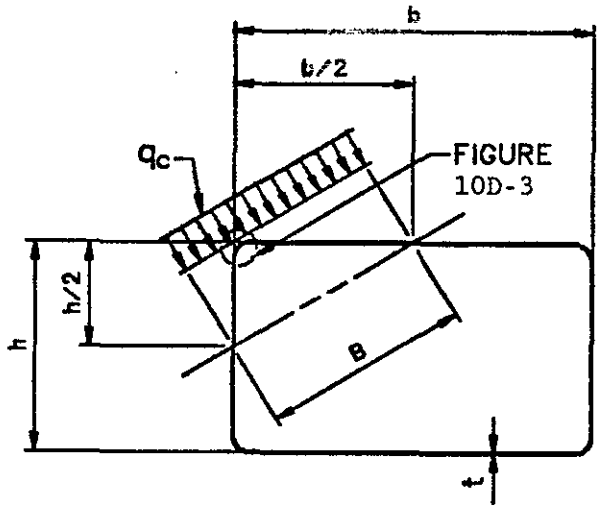

DUCT CROSS SECTION AND LOAD CONTRIBUTING AREA

FIGURE 10D-2

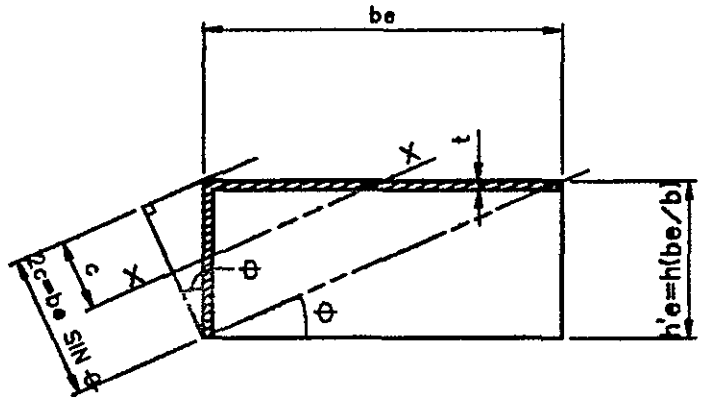

EFFECTIVE SHEET WIDTHS RESISTING BENDING AT DUCT CORNER

FIGURE 103-3

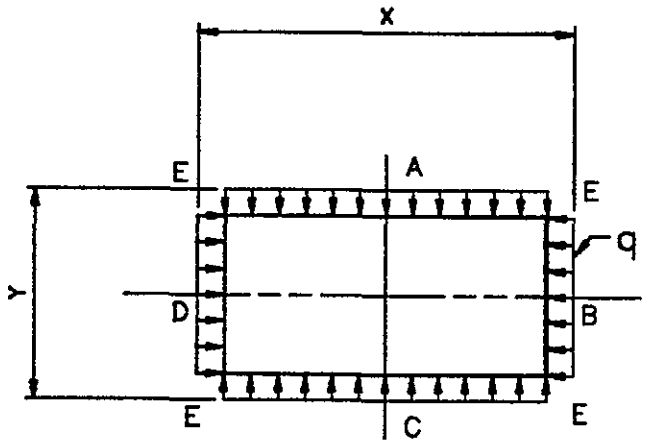

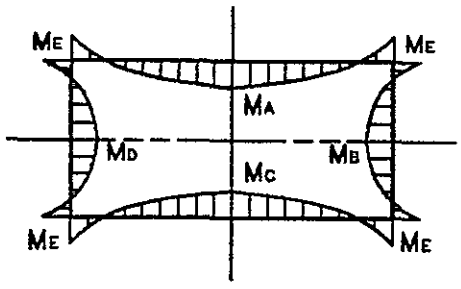

FIGURE 10D-4
MOMENT DIAGRAM FOR STIFFENERS

STRUCTURAL AND CIVIL BASIS FOR DESIGN

APPENDIX 10E

CIVIL ENGINEERING AND DESIGN

10E.1 GENERAL

The purpose of this appendix is to provide basic civil engineering design criteria for the HWVP located in the 200 East Area of the Hanford Reservation near Richland, Washington.

10E.2 DESIGN CRITERIA DOCUMENTS (In addition to those listed in Section 10.2).

10E.2.1 Hanford Plant Standards General Design Criteria - Hanford and National Codes and Standards, HPS-SDC-1.2, Rev. 10.

10E.2.2 Hanford Plant Standards - Railroads, HPS-SDC-3.1, Rev. 6.

10E.2.3 Hanford Plant Standards - Minimum Depth of Underground Water Lines, HPS-SDC-3.2, Rev. 2.

10E.2.4 Hanford Plant Standards, Inter-Area Highway Cross-Sections, HPS-AC-6-1.

10E.2.5 Hanford Plant Standards, Inter-Area Roadway Cross-Section, HPS-AC-6-2.

10E.2.6 Hanford Plant Standards, Curb and Gutter, HPS-AC-6-10.

10E.2.7 Hanford Plant Standards, Sidewalks, HPS-AC-6-11.

10E.2.8 Hanford Plant Standards, Minimum Road Clearances, HPS-AC-6-20.

10E.2.9 Hanford Plant Standards, Standard Clearances for Railroad Tracks, HPS-AC-7-1.

10E.2.10 Hanford Plant Standards, Railroad Cross Sections, HPS-AC-7-2.

10E.2.11 Hanford Plant Standards, Widening at Railroad Turnout, HPS-AC-7-3.

10E.2.12 Hanford Plant Standards, Turnout 15'-0" Switch and No. 8 Frog, HPS-AC-7-4.

10E.2.13 Hanford Plant Standards, Turnout 16'-6" Switch and No. 10 Frog, HPS-AC-7-5.

10E.2.14 Hanford Plant Standards, Railroad Gage Rods, HPS-AC-7-6.

10E.2.15 Hanford Plant Standards, Railroad Anchors, HPS-AC-7-7.

10E.2.16 Hanford Plant Standards, Railroad Crossing, HPS-AC-7-20.

10E.2.17 Hanford Plant Standards, Wood Plank Railroad Crossing, HPS-AC-7-21.

10E.2.18 Hanford Plant Standards, Railroad Mile Post, HPS-AC-7-30.

10E.2.19 Hanford Plant Standards, Whistle Post, HPS-AC-7-31.

10E.2.20 Hanford Plant Standards, Railroad-Highway Crossing Sign, HPS-AC-7-32.

10E.2.21 Hanford Plant Standards, Specification for Grading and Drainage for Roads, HPS-530-AC.

10E.2.22 Hanford Plant Standards, Specification for One-Course Crushed Gravel Surfacing, HPS-531-AC.

10E.2.23 Hanford Plant Standards, Specification for Nonskid Single Seal Treatment for Roads, HPS-532-AC.

10E.2.24 Hanford Plant Standards, Specification for Light Asphaltic Pavements, HPS-533-AC.

10E.2.25 Hanford Plant Standards, Specifications for Cold-Laid Asphaltic Plant Mix for Paving and Patching, HPS-535-AC.

10E.2.26 Hanford Plant Standards, Specifications for Hot-Laid Asphalt Concrete Pavement, HPS-536-AC.

10E.2.27 Hanford Plant Standards, Specification for Excavation, Backfill and Finish Grading, HPS-550-AC.

10E.2.28 Hanford Plant Standards, Specifications for Installation of Underground Piping, HPS-551-AC.

10E.2.29 Hanford Plant Standards, Specifications for Wood Post Fence, HPS-555-AC.

10E.2.30 Hanford Plant Standards, Specifications for Chain Link Security Fence, HPS-556-AC.

10E.2.31 Hanford Plant Standards, Specifications for Railroad Construction, HPS-558-AC.

10E.2.32 Hanford Plant Standards, Precast Concrete Manhole, HPS-AC-4-2.

10E.2.33 Hanford Plant Standards, Shallow Concrete Manhole, HPS-AC-4-5.

10E.2.34 Hanford Plant Standards, Pipe Protection - Concrete Cradle Bedding, HPS-AC-4-50.

10E.2.35 Hanford Plant Standards, Pipe Protection - Encasement, HPS-AC-4-52.

10E.2.36 Washington State Department of Transportation, Design Manual, M22-01.

10E.2.37 Washington State Department of Transportation Manual, Standard Specifications for Road, Bridge and Municipal Construction, M41-10.

10E.3 SITE PREPARATION

10E.3.1 Demolition

Provisions must be made for the removal and disposal (or relocation in some cases) of existing barricades, concrete slabs, security fencing, gates, surveillance equipment, abandoned utilities, contaminated soils, etc.

10E.3.2 Excavation and Rough Grading

Main building excavations will be designed for the following considerations:

The slope, width and locations of the haul roads will be determined in accordance with equipment capabilities and requirements, and site restrictions governing heavy equipment movement and location of excavated material.

Clearance for foundation construction activities.

Existing appurtenances which must be preserved.

Recommendations from the geotechnical investigation report.

Contaminated soil disposal.

10E.3.3 Temporary Construction Facilities

Provisions will be made to temporarily house personnel involved in site construction. The location of trailers and provisions for parking and egress shall be coordinated.

10E.3.4 Construction Site Drainage

Excavation will be performed in such a manner that the area of the site and the area immediately surrounding the site will be continually and effectively drained by gravity or by temporary

pumps. Water shall not be permitted to accumulate in the excavation. Surface drains, culverts and catch basins may be required.

10E.3.5 Sewage Drain Field

Sanitary sewage drain leach fields or seepage pits and septic tanks will be designed in accordance with Section 10E.6 herein.

10E.4 EARTHWORK AND GRADING

The geotechnical report (Ref. 10-1) provides recommendations and values for performance of earthwork design. Slopes for dikes, embankments and cut and fill faces shall be as follows:

	Horizontal to Vertical	
Cut Slopes	Temporary	Permanent
In Stratum 1 (above El. 698)	1.8 to 1	2.5 to 1
In Stratum 2 (El. 698 - 693)	1.5 to 1	2.0 to 1
In Stratum 3 (below El. 693)	1.25 to 1	1.75 to 1
Water Retention Dikes (All strata)	1.75 to 1	1.75 to 1
Underground Utilities Excavation	1.8 to 1	--

10E.5 STORM DRAIN SYSTEM

10E.5.1 Rainfall Intensity

Stormwater management systems (storm drains, culverts, ditches, catch basins, etc.) will be designed in accordance with DOE 6430.1A, Section 0270-2.

Stormwater management systems will be designed for not less than a rainfall intensity with an annual probability of exceedance of 4×10^{-2} (25 year storm) and a 6 hour storm duration.

All HWVP structures, systems and components (items) will be protected from local flooding which may cause an item to cease to perform its function. Items shall be protected from local flooding due to rainfall intensity with the following probability for each safety classification:

- Safety Class 1 items — Annual probability of exceedance $\leq 10^{-5}$ (100,000 year storm)

- Safety Class 2 times — Annual probability of exceedance $\leq 10^{-4}$ (10,000 year storm)
- Safety Class 3 items — Annual probability of exceedance $\leq 5x10^{-4}$ (2,000 year storm)
- Safety Class 4 items — Annual probability of exceedance $\leq 2x10^{-3}$ (500 year storm)

Rainfall intensity curves are given on Figure 10E-1.

Parts or portions of the HWVP site as well as structures situated on the site are allowed to become temporarily flooded, provided that the amount of potential damage and the effects on the operations of the plant are evaluated and determined to be acceptable.

10E.5.2 Storm Runoff Calculations

The rational formula will be used to calculate storm runoff:

Q = CIA
Q = Rate of Runoff, cubic feet per second
C = Runoff coefficient, represents the ratio of runoff to rainfall. The coefficient depends on the type of surface of the area to be drained.
C = 1.0 for paved areas and roof surfaces
C = 0.7 for compacted gravel
C = 0.5 for site soils and loose gravel
I = Rainfall intensity, inches per hour
A = Tributary area, acres

10E.5.3 Flow Capacities

The capacity of drains, ditches and channels will be calculated using the Manning Equation:

$$Q = \frac{1.486}{n} r^{2/3} s^{1/2} A$$

where:

Q = Capacity in cubic feet per second

A = Cross sectional area of flow in square feet

r = Hydraulic radius in feet

s = Slope of energy grade line

n = Roughness coefficient as follows:

Lined ditches and channels

n = 0.014 for poured concrete

n = 0.016 for shotcrete (gunite)

n = 0.016 for asphalt pavement

n = 0.025 for crushed rock

Unlined ditches and channels

n = 0.025 for natural ground

Pipe Material

Steel	n = 0.013
Ductile iron	n = 0.013
Cast iron	n = 0.013
Cement lined pipe	n = 0.013
Concrete pipe	n = 0.013
Vitrified clay pipe	n = 0.013
Fiberglass reinforced plastic	n = 0.013
Corrugated metal pipe	n = 0.024

10E.5.4 Culverts and Pipe

Drainage culverts will be corrugated metal pipe, reinforced concrete pipe or reinforced concrete box as necessary to meet the requirements for stormwater drainage, truck loads and depth of fill above the culvert.

Culverts under roads will be designed to support the earth pressures on the culvert and HS 20 truck loading plus applicable impact in accordance with AASHTO HB-13 (Reference 10E.1). Minimum cover over culverts will be 12 inches for corrugated metal pipe and reinforced concrete pipe. Minimum cover over culverts under the railway will be per the requirements of AREA Manual for Railway Engineering.

The minimum size of culverts will be 15 inch diameter for lengths of 30 feet or less, and 18 inch diameter for lengths over 30 feet.

Where installation of multiple culverts is required, the minimum clear distance between pipes will be as follows:

Pipe Diameter	Minimum Clear Distance
12 inch to 24 inch	12 inches
27 inch to 72 inch	1/2 diameter
78 inch to 120 inch	36 inches

Culverts will have a minimum slope of 0.5 percent.

Culverts will be sized to flow with an unsubmerged inlet during the 25 year return 6 hour duration storm.

In designing any culvert larger or more costly than a 36 inch diameter single-barrel pipe (e.g., arch and oval pipe, multiple barrel culverts, concrete box, etc.), all design features such as headwalls, endwalls, transition structures, energy dissipators, etc., will be selected strictly on the basis of culvert performance and be economically justified.

Stormwater drains will be designed to flow full during the 25 year return 6 hour duration storm. At peak design flow, the water level at the most remote catch basin of the system will be a minimum of 6 inches below top of grating. The controlling elevation at a junction of a main, lateral, or sublateral for calculating the hydraulic gradeline upstream will be the hydraulic grade elevation of the main or lateral at that point or the soffit elevation of the pipe, whichever is greater.

The minimum pipe size for stormwater will be 12 inches for mainlines and 8 inches for branch lines.

Stormwater sewers will be designed to flow at a velocity not to exceed 20 feet per second during the 25 year return 6 hour duration storm.

Pipe slopes will be sufficient to provide the minimum velocities required.

10E.5.5 Ditches and Channels

Minimum slope of any ditch or channel will be 0.2 percent.

Lining for ditches and channels, if required for erosion control, will be poured concrete or shotcrete.

Ditches and channels will be designed with 1 foot minimum of freeboard.

10E.6 SANITARY SEWER SYSTEM

10E.6.1 General

The sanitary sewer system design will be in accordance with TM 5-814-1 (Reference 10E.2) and PDG Section 3.2.4. All sanitary sewers will be underground gravity systems.

10E.6.2 Flow Quantities

The peak design flow for the sanitary sewer system will be determined in accordance with TM 5-814-1 (Reference 10E.2).

10E.6.3 Sewer System Layout

Layout of underground sewer systems will be in accordance with good practice. Layout of sewer systems will conform to system flow diagrams agreed upon by all concerned engineering disciplines.

10E.6.4 Sewer Line Sizing

Line sizing of sewers will be based on Manning's Equation. Refer to Section 10E.5.3. Sanitary and liquid waste sewers will be designed to flow at a maximum depth 0.70 of the conduit diameter.

Velocities

Minimum flow velocity will be 2.0 feet per second at the peak diurnal flow. Maximum flow velocity will be 10 feet per second at the extreme peak flow.

Slopes

Pipe slopes must be sufficient to provide the required minimum velocities and depths of cover required.

Minimum Pipe Size

The minimum pipe size for branch lines will be 6 inches in diameter.

10E.6.5 Cover

To prevent freezing per Section 10.7.3.2 and in accordance with Hanford Plant Standards SDC-3.2, the cover over sewer lines will be a minimum of 30 inches except under roads, streets and parking areas where the minimum cover will be 36 inches.

In paved or unpaved areas subject to vehicular traffic, the cover over the top of the pipe will be determined to prevent rupture of pipe walls for rigid pipe, and excessive deflection and collapse or buckling of flexible pipe walls.

External loads on underground pipe will include gravity earth load and superimposed loads, concentrated or distributed, including appropriate factors of safety. Superimposed loads are AASHTO HS 20 truck loads and maintenance equipment loads.

Supporting strength of reinforced concrete pipe will be comprised of the D-load strength determined from the three-edge bearing test, the bedding, the backfill lateral support and the classification of construction conditions, that is trench, embankment or tunnel, and modified by an appropriate factor of safety.

Supporting strength of flexible pipe will be comprised of inherent material strength, the bedding and the passive resistance pressure of the soil.

Casing (sleeve) pipe or concrete encasement will be used wherever the underground line is incapable of withstanding the loads imposed by traffic and earth. Casing installation by jacking will be required wherever open excavation of an existing road is prohibited.

10E.6.6 Septic Systems

The septic (sewage) systems including the septic tank, dosing tank, lift station and leach field shall conform to the guidelines for the State of Washington as given in references 10E.10 and 10E.11 and as given herein.

Sizing of septic tanks used in sanitary sewer systems will be based on 1.5 times the daily maximum design flow. Septic tanks will be vented. Tanks will be reinforced concrete, precast or cast-in-place. Dosing tanks and siphons will be used when the total length of leach field piping exceeds 500 feet. The daily dose volume should be at least 7 times the volume of the manifold and lateral piping network which drains between doses plus one time the interior volume of the transport line.

Based on the soil type (fine sand and silt) the allowable sewage absorption will be 0.8 gal/day/ft^2 as per Table 2. Ref. 10E.10.

Concrete materials, design and construction for sanitary engineering structures will comply with ACI 350.

10E.7 ROADS AND PAVING

10E.7.1 General

Geometric design of all roads will be in accordance with AASHTO GDHS (Reference 10E.3).

The design load for roads and parking areas will be HS 20 truck as specified in AASHTO.

Minimum cross slope of road surfaces will be 2 percent.

Width of roads, roadway profiles and clearances will be per Hanford Plant Standards HPS-AC-6.

For paved parking areas, positive surface drainage will be provided with a minimum slope of 1 percent and a maximum slope of 4 percent.

10E.7.2 Asphalt Paving

In general, asphalt paving will be used on roads and parking areas.

Design and details of construction of flexible pavements will comply with the State of Washington Highway Department Standards. The subgrade modulus and Design Traffic Number, DTN, will be used in this design. The subgrade modulus based on 1 foot square plate bearing tests is 175 lb/in^3, equal to a CBR of 12. The DTN is the average daily number of equivalent 18 kip single axle loads estimated for the design life. The design life of the pavement will be 25 years.

Asphalt paving will be designed to ensure drainage of the pavement.

10E.7.3 Gravel Roads or Crushed Rock Surfacing

The thickness and extent of gravel or crushed rock surfacing will be as required for the intended use. Gravel surfacing shall be placed on all unpaved areas within the area enclosed by the site security fence.

The gradation of gravel or crushed rock will be as follows (Hanford Plant Standard HPS-531-AC) and will be shown on the design drawings:

US Sieve Size (ASME E11)	Percent Passing (By Weight)
3/4 inch	100
1/4 inch	55-75
No. 40 mesh	8-24
No. 200 mesh	10 maximum

Gravel surfacing will be placed true to line and grade and wil be within plus or minus 3/4 inch of the elevations shown on the design drawings.

Compaction will be in accordance with Section 6 of Hanford Plant Standard HPS-531-AC.

10E.8.0 RAILROADS

Railroad design will be in accordance with DOE 6430.1A Section 0245, AREA (Reference 10E.4) and Hanford Plant Standards SDC 3.1 and HPS-AC-7.

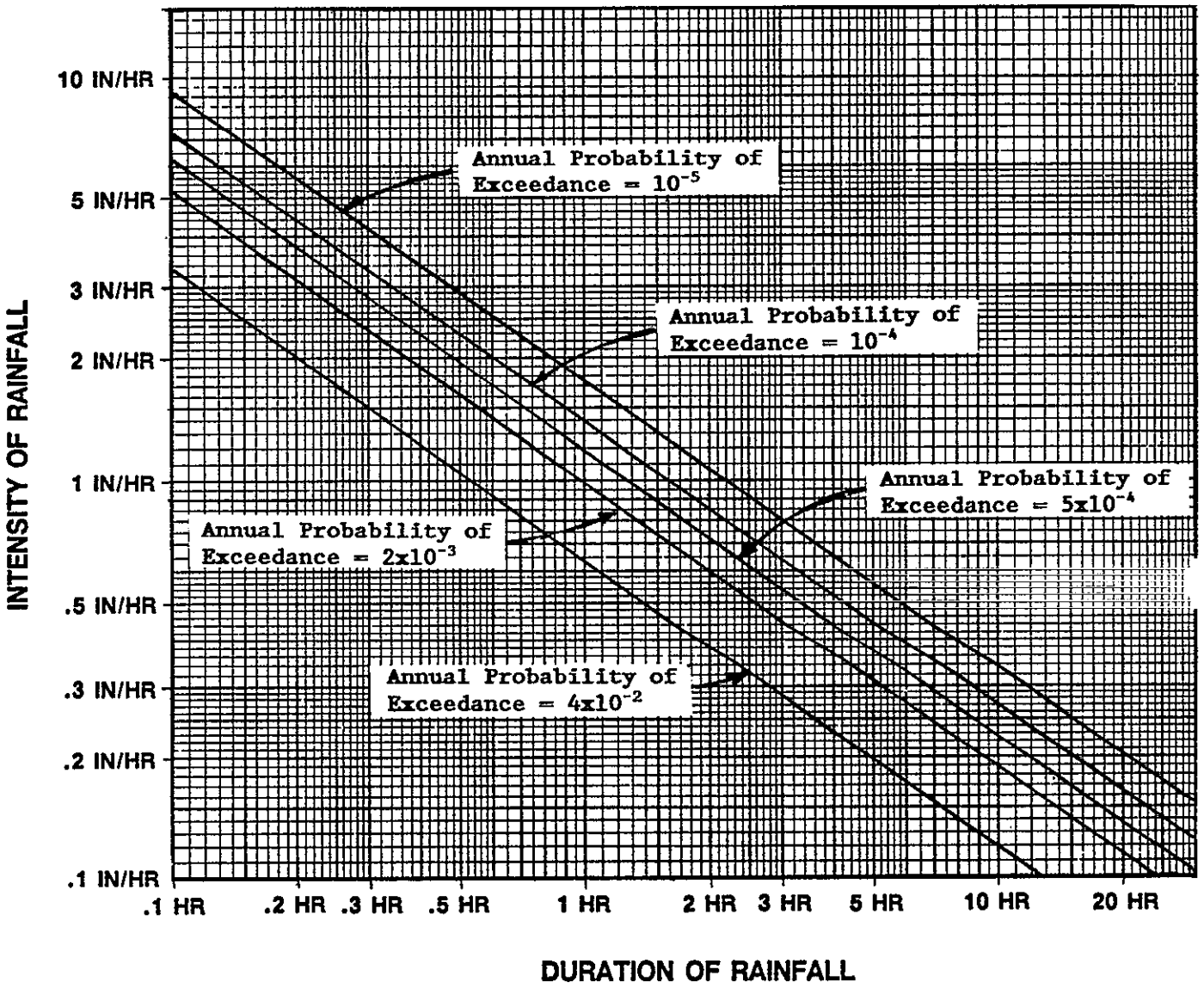

Figure 10E-1
Rainfall Intensity
(Reference 10E.9)

SECTION 11.0

FIRE PROTECTION AND DETECTION DESIGN BASIS (SYSTEM 04)

TABLE OF CONTENTS

SECTION		PAGE
11.1	SCOPE	3
11.1.1	ENGINEERING AND DESIGN REQUIREMENTS	3
11.1.2	FIRE PROTECTION DESIGN	3
11.1.3	FIRE PROTECTION AND DETECTION DESIGN INTERFACES	3
11.2	CODES AND STANDARDS	4
11.2.1	TECHNICAL REQUIREMENTS BASELINE	4
11.2.2	GOVERNING REGULATIONS	4
11.3	GENERAL CONSIDERATIONS	5
11.3.1	SAFETY CLASSIFICATION	5
11.3.2	DESIGN BASIS ACCIDENTS	5
11.3.3	QUALITY ASSURANCE IMPACT LEVELS	6
11.3.4	ACCESS AND WORKING SPACE	6
11.3.5	PLANT FIRE ALARM INTERFACE REQUIREMENTS	6
11.3.6	PLANT ACCESS	6
11.3.7	DRAINAGE	6
11.4	FIRE PROTECTION AND DETECTION DESIGN CONSIDERATIONS AND STANDARD	6
11.4.1	GENERAL DESIGN CONSIDERATIONS	6
11.4.2	FIRE HAZARDS ANALYSIS	7
11.4.3	MAXIMUM FIRE LOSS	8
11.5	SPECIFICATIONS	9
11.6	DRAWINGS	9
11.7	ACCESS AND EGRESS REQUIREMENTS	9
11.7.1	General	9
11.7.2	Life Safety Criteria	9
11.8	FIREWATER SYSTEMS	15
11.8.1	Firewater Supply System	15
11.8.2	Standpipe Systems	16
11.8.3	Automatic Wet-Pipe Sprinkler Systems	16
11.8.4	PREACTION AND DRY-PIPE SPRINKLER SYSTEMS	16
11.8.5	DELUGE WATERSPRAY SYSTEMS	17

11.9 FIRE ALARM AND DETECTION EQUIPMENT 17

11.9.1 System Design 17
11.9.2 Fire Alarm Equipment 18
11.9.3 Automatic Fire Detection Systems 18

11.10 FIRE BARRIERS 18

11.10.1 Firewalls 18
11.10.1.3 Loss Limitations 19
11.10.2 Fireproofing 19
11.10.3 Fire Doors and Fire Dampers 20
11.10.4 Fire Rated Penetrations 20
11.10.5 Firestops 20

11.0 FIRE PROTECTION AND DETECTION DESIGN

11.1 SCOPE

11.1.1 ENGINEERING AND DESIGN REQUIREMENTS

This document covers the general engineering and design requirements of the fire protection and detection systems for the Hanford Waste Vitrification Plant (HWVP) to be constructed within the 200 East Area of the DOE Hanford Site in the State of Washington.

11.1.2 FIRE PROTECTION DESIGN

The fire protection design will include all applicable elements as defined in this document for the following buildings, facilities and systems:

a) Vitrification Building;

b) Manipulator Repair Building;

c) Canister Storage Building;

d) Fan House;

e) Sand Filter Building;

f) Service Building;

g) Operations Control Building;

h) Regulated Entrance Facility;

i) Generator/Switchgear Building;

j) RLST/WHT Building;

k) Cooling Tower;

l) Construction Facilities;

m) Firewater Systems.

11.1.3 FIRE PROTECTION AND DETECTION DESIGN INTERFACES

11.1.3.1 The fire protection design will interface with the following systems:

a) Fire Detection and Alarms-Control Systems

b) Fire Dampers -HVAC Systems

c) Automatic Sprinkler Systems-Control Systems

11.2 CODES AND STANDARDS

11.2.1 TECHNICAL REQUIREMENTS BASELINE

This design guide is based on the following:

a) SD-HWV-DP-001 Hanford Waste Vitrification Plant Technical Data Package

b) SD-HWV-FDC-001 Hanford Waste Vitrification Plant Functional Design Criteria.

11.2.2 GOVERNING REGULATIONS

The following codes and standards will govern the fire protection and detection design of this project. The latest edition in effect on June 1, 1989, will be used unless specific editions and/or revisions are indicated as applicable:

ANSI N290	Design, Construction and Operation of Ventilation Systems for Mixed Oxide Fuel Fabrication Plants
ASTM E119	Fire Tests of Building Construction and Materials
DOE 6430.1A	General Design Criteria
FM	Factory Mutual Approval Guide
	Factory Mutual Datasheet 1-57
NFPA	National Fire Protection Association
	Fire Protection Handbook, 16th Edition
	10 Portable Fire Extinguishers
	13 Installation of Sprinkler Systems
	13A Inspection, Testing and Maintenance of Sprinkler Systems
	14 Installation of Standpipe and Hose Systems
	15 Water Spray Fixed Systems for Fire Protection
	20 Installation of Centrifugal Fire Pumps
	22 Water Tanks for Private Fire Protection
	24 Installation of Private Fire Service Mains
	70 National Electrical Code

	72B	Installation, Maintenance and Use of Auxiliary Protective Signaling Systems
	72E	Automatic Fire Detectors
	80A	Protection From Exposure Fires
	75	Protection of Electronic Computer/Data Processing Equipment
	101	Life Safety Code
	172	Standard Fire Protection Symbols for Architectural and Engineering Drawings
	801	Facilities Handling Radioactive Materials
	1963	Screw Threads and Gaskets for Fire Hose Connections
OSHA	29CFR 1926 & 29CFR 1910	

11.3 GENERAL CONSIDERATIONS

11.3.1 SAFETY CLASSIFICATION

The Fire Protection System is Safety Class 3 (occupational hazards). In the future (by September 1990), any Safety Class 1 or 2 systems that are vulnerable to a single fire will be protected by Safety Class 1 or 2 fire protection. For more information, see Section 2.5.

11.3.2 DESIGN BASIS ACCIDENTS

The following design basis accidents will be considered in the design of any Safety Class 1 or 2 fire protection systems.

11.3.2.1 Design Basis Fire

The Design Basis Fire is that fire which is the most severe design basis accident of this type. In postulating such a fire, failure of automatic and manual fire suppression provisions will be assumed except for those considered to be critical items. A design basis fire is a theoretical event that postulates the complete combustion of all fuel (i.e., flashover is assumed) in a compartment and considers the total heat released under these conditions. An actual fire usually involves varying amounts of incomplete combustion and, therefore, yields a lower total heat release to the compartment; thus, an actual fire is less severe than a design basis fire.

11.3.2.2 Design Basis Power Failure

- The adequacy of the final containment and confinement barriers and safety systems will be evaluated against the Design Basis Power Failure (reference ANSI N290.8.3.4). The design basis power failure will be considered to be a total loss of power for a maximum period of 48 hours.

- Normal power refers to the services supplied from the 230-13.8 kv substation at HWVP.

11.3.2.3 Design Basis Earthquake

Any Safety Class 1 or 2 fire protection equipment will be designed to survive the Design Basis Earthquake defined in HPS-SDC-4.1, Rev. 11 as will one of the two firewater supplies.

11.3.3 QUALITY ASSURANCE IMPACT LEVELS

Application of the Quality Assurance program requirements will take into consideration the impact levels defined in Section 2.5.4.

11.3.4 ACCESS AND WORKING SPACE

Sufficient access and working space will be provided to permit ready and safe operation and maintenance of such equipment. Access and working space will be provided in accordance with the applicable codes and standards referenced in this procedure.

11.3.5 PLANT FIRE ALARM INTERFACE REQUIREMENTS

The Fire Alarm System will interface with the Hanford Site Radio Master Box System. The responsibility of this interface will be limited to providing dry output fire alarm contacts from all HWVP alarms, including Fire, Trouble and Supervisory signals.

11.3.6 PLANT ACCESS

The site access roads for the plant will be such that the largest piece of fire equipment, with a turning radius of 70 feet, will be usable within the facility.

11.3.7 DRAINAGE

The facility will be provided with drainage in accordance with the requirements of DOE Order 6430.1A.

11.4 FIRE PROTECTION AND DETECTION DESIGN CONSIDERATIONS AND STANDARD PRACTICES

11.4.1 GENERAL DESIGN CONSIDERATIONS

The fire protection and detection system design will, in general, conform to the requirements of the codes and standards listed in

Section 11.2. The basis for the installation of fire protection systems: is a) Property Loss Criteria, b) Life Safety, c) Confinement, and d) Containment.

11.4.2 FIRE HAZARDS ANALYSIS

The "Design Basis Fire Analysis" is the primary tool used to determine the fire protection requirements for the facility. The hazards of a fire in the plant can be controlled in a variety of ways. A major emphasis of all systems in plants is "defense in depth." Defense in depth applied to fire safety systems requires fire prevention and fire protection to be implemented by both engineering design and administrative control. The "Design Basis Fire Analysis" is one of the most important inputs into the evolution of the fire protection system.

11.4.2.1 Design Basis Fire

The Design Basis Fire is defined in Section 11.3.2.1.

11.4.2.2 Exposure Fire

An exposure fire is a fire in a given area that involves either fixed or transient combustibles and is external to any structures, systems, or components located in, or adjacent to, that same area. The effects of such fire (e.g., smoke, heat, or ignition) can adversely affect those structures, systems or components important to safety. Thus, a fire involving one train of a redundant train located in the same area, and a fire involving combustibles other than either redundant train may constitute an exposure fire to both redundant trains located in the same area.

11.4.2.3 Fire Zone

A fire zone is that portion of building which is separated from other zones by fire-rated walls, floors or ceilings.

11.4.2.4 Fire Loading

The amount of each combustible is multiplied by its heat of combustion yielding the heat released. Typical heats of combustion are shown in the design basis fire analysis. The total heat released (BTU) from the combustible material in the fire area is divided by the floor area (square feet) yielding the fire loading for the fire area.

11.4.2.5 Maximum Permissible Fire Loading

The maximum permissible fire loading defines the maximum fire loading which may be contained in the zone without exceeding the lowest fire rating of the barriers or penetrations in the area. Heavy concrete walls are assigned a maximum permissible fire loading based on the thickness of the concrete, and the size, type, and location of penetrations. The maximum fire loading value is based

on an even distribution of the combustible material within the fire area.

The maximum permissible fire loading represents the maximum fixed and transient combustibles which can be contained by the fire barriers. An attempt has been made to estimate the amount of transient loads; however, every effort will be made to minimize and provide adequate fire protection for transient fire loads which will be handled by administrative controls.

11.4.2.6 Fire Resistance Requirements

Walls, structures, and penetration seals are assigned a fire resistance rating based on tests conducted by using the standard time-temperature curve (ASTM E-119). Since the fire barrier's ability to withstand the design basis fire is based on this curve, the duration that the fire will burn before theoretically breaching the barrier must also be based on this curve. To calculate the fire resistance requirement of the barrier, divide the fire loading in the area by 80,000 Btu/sq ft which corresponds to a 1-hour fire. (NFPA Handbook, 16th Edition, Figure 7-9B, Chapter 7, Section 9)

11.4.2.7 Critical Items

Critical items refer to those structures, systems, and components whose continued integrity and/or operability are essential to ensure confinement or measure the release of radioactive materials in the event of a design basis accident. Critical items will be capable of performing the required safety functions.

11.4.2.8 Hazardous Equipment Locations

Electrical equipment is classified depending on the properties of the flammable vapors, liquids, or gases, or combustible dusts or fibers which may be present and the likelihood that a flammable or combustible concentration or quantity is present.

11.4.3 MAXIMUM FIRE LOSS

11.4.3.1 Maximum Credible Loss

Maximum credible loss refers to the maximum loss that could occur from a combination of events resulting from a single fire. Any installed fire protection systems are assumed to function as designed.

11.4.3.2 Maximum Possible Fire Loss

The maximum possible fire loss means the estimated dollar loss in a single fire area, assuming the absence of both automatic and manual fire extinguishing actions plus related losses incurred in other areas of the facility and losses incurred as a result of

operating or program mission interruptions and delays where such losses can be estimated.

11.5 SPECIFICATIONS

Preparations of Specifications

11.5.1 Specifications will be prepared in accordance with Section 4.0 of the PM/CM.

11.5.2 Specifications will be prepared to define all fire protection equipment and materials as well as their installation and testing.

11.6 DRAWINGS

Preparations of Drawings

11.6.1 Drawings will be prepared in accordance with Section 4.4 of the PM/CM.

11.7 ACCESS AND EGRESS REQUIREMENTS

11.7.1 General

The buildings comprising the Hanford Waste Vitrification Project have been designed to meet the most restrictive life safety requirements described in DOE Orders 5480.7 and 6430.1A, and NFPA 101, as summarized in the following Life Safety Criteria. The design of egress capabilities permits prompt escape of occupants from the buildings or into safe areas within the building. As the building design develops, the building arrangement drawings will be reviewed for compliance to the life safety criteria. Those items to be reviewed for compliance include: travel distance to an exit, the rating of fire barriers required to allow safe egress, the number and capacity of exits, the use of horizontal exits and exit passageways, the arrangement of, and illumination of, exits, and the elimination of dead end design configurations.

11.7.2 Life Safety Criteria

LIFE SAFETY CRITERIA*

11.7.2.1	SEPARATION	
	A. Exits	1 hour
	B. Exit access corridors	1 hour
11.7.2.2	HEADROOM WITHIN A MEANS OF EGRESS	
	A. Ceiling	7 feet 6 inches
	B. Projection	6 feet 8 inches
11.7.2.3	DOORS	
	A. Width	
	1. Minimum clear width	32 inches
	2. Maximum single door	48 inches
	B. Floor level on both sides for a doorway	Substantially level and have the same elevation on both sides of the door way, for a distance equal to the width of the widest leaf.
	C. Swing	
	1. In direction of travel	- in an exit enclosure serving hazardous rooms or areas - rooms with an occupancy load of 50 or more
	2. Into an aisle, passageway and landing	Will leave unobstructed at least one-half its required width
	3. When fully open projection into means of egress	7 inches

D. Forces required

1. to release the latch	15 lbf.
2. to set door in motion	30 lbf.
3. to open the minimum required width	15 lbf.

11.7.2.4 STAIRS

A. Dimensions

1. Minimum width	44 inches
2. Maximum riser height	7 inches
3. Minimum riser height	4 inches
4. Minimum tread depth	11 inches
5. Minimum head room	6 feet 8 inches
6. Maximum distance between landing	12 feet 0 inches vertically

B. Enclosures

1. Three stories or less	1 hour separation
2. Four stories or more	2 hour separation

11.7.2.5 HORIZONTAL EXITS

A. Area of refuge	3 square feet per person for both floor areas
B. Separation	2 hours

11.7.2.6	EXIT PASSAGEWAYS	
	A. Separation	1 hour
	B. Width	Adequate to accommodate capacity of all exits discharging through
11.7.2.7	OCCUPANT LOAD	
	A. Capacity	
	1. Stairways	- 0.7 inches per person (high hazard occupancy) - 0.3 inches per person (other occupancies)
	2. Level components (door hazard occupancy)	- 0.4 inches per person (high hazard occupancy) - 0.2 inches per person (other occupancy)
	3. Loading	100 square feet per person
	B. Minimum exit access	36 inches
11.7.2.8	NUMBER OF MEANS OF EGRESS	
	A. Minimum number required	2 from any story or portion
	B. Occupant load of 500 to 100	3 exits minimum
	C. Occupant load of 1001 or more	4 exits minimum

11.7.2.9 ARRANGEMENT OF MEANS OF EGRESS

A. Two or more exits

1. No sprinkler protection installed	will be placed a distance apart equal to, no less than, one-half the length of the maximum overall diagonal dimension of the building or area to be straight line between exits.
2. Protected throughout with an approved automatic sprinkler system	The minimum separation distances between two exits will not be less than one-third the length of the maximum overall dimension of the building or area to be served, measured in a straight line between exits.

B. Dead ends

1. High hazard occupancies	not permitted
2. Other - industrial occupancies	50 feet

11.7.2.10 MEASUREMENT OF TRAVEL DISTANCE TO EXITS

A. Method	Distance to exits will be measured from the most remote point subject to occupancy
B. Distance	
1. High hazard industrial occupancy	75 feet
2. Low and ordinary hazard industrial occupancy fully sprinklered building	150 feet

11.7.2.11 ILLUMINATION OF MEANS OF EGRESS

A. Illumination value	1 footcandle measured at the floor
B. Duration	1.5 hours (0.6 footcandles at the end of time duration)

11.7.2.12 MARKING OF MEANS OF EGRESS

A. Location	readily visible from any direction of exit access
B. Spacing	100 feet maximum
C. Size - Minimum	- 6-inch high letters - 2-inch wide letters - 0.75-inch stroke width - 0.375-inch spacing between
D. Illumination	5 footcandles minimum
E. Contrast ratio	0.5 minimum

11.8 FIREWATER SYSTEMS

11.8.1 Firewater Supply System

The design of the firewater supply system is based on the codes and standards listed in Section 11.2 and the Design Basis Fire Analysis.

11.8.1.1 Underground Distribution System

The underground fire water distribution system will be designed and installed in accordance with the requirements of NFPA 24. The detailed design of this system will be performed by Fluor Daniel. Each fire protection system supplied from this distribution system will incorporate a post indicator valve (PIV). The underground fire water Distribution System shall meet DBE requirements.

Underground fire water mains or combined fire and domestic water mains, including valves, hydrants, and fittings, will be installed, flushed, sterilized, and tested in accordance with the requirements of NFPA 24 and Section 260, Piped Utility Materials. Water storage tanks will comply with NFPA 22 and meet the requirements for a DBE. Fire pumps will comply with NFPA 20. Water storage tanks will be sufficient to meet the density, pressure, and duration requirements of NFPA 13. Whenever feasible, all water distribution systems will be of the looped grid type providing two-way flow with sectional valving arranged to provide alternate water flow paths to any point in the system.

Fire mains (except those supplying a single main or extensions as existing smaller mains) will be at least eight inches. Mains will be sized to supply the largest fire demand plus the largest domestic and process demand with consideration for residual sprinkler system pressure requirements. Sprinkler supply lead-ins should be at least six inches, except lead-ins of four inches may be used for very small sprinkler systems when substantiated by hydraulic calculations. In no case will the lead-in be smaller than the sprinkler riser.

Sprinkler risers should be located at exterior walls. Sprinkler supply lead-ins should run under buildings the minimum distance possible. Where a riser must be located in a potentially contaminated area, consideration should be given to locating the riser exterior to the building in a heated enclosure. Outside control valves will be located, if possible, a minimum distance of 40 feet from the building. If site conditions preclude the use of PIVs such as where they are susceptible to mechanical damage and cannot be properly guarded, OS&Y valves in pits may be used. Key operated buried valves will not be used for sprinkler control valves. In no case will there be more than one valve controlling a sprinkler supply lead-in. All lead-ins will be connected with the sprinkler system at the base of the riser. Alarm valves shall be located as close as practical to the building entry point. Hydrants will be provided so that hose lays from hydrants to all exterior portions of a protected building are not more than 300 feet. Hydrants will not be closer to buildings than 50 feet.

11.8.2 Standpipe Systems

Installation of standpipe systems will comply with NFPA 14 and meet requirements for a DBE. Standpipes will be provided in the stairwells with 2.5 inch hose connections and 1/4 turn ball valves at each level of the Vitrification Building. The standpipes will be supplied from 2.5 inch siamese connections at grade. The standpipe system will be designed as a Safety Class I system.

11.8.3 Automatic Wet-Pipe Sprinkler Systems

Sprinkler systems will be wet-pipe and installed per NFPA 13 for ordinary hazard pipe schedule. Hydraulic designs shall be required for all systems. The system will be hydraulically designed where residual pressure is marginal, water application rate is high, response time is critical, or special risks are involved. NFPA 13 will be used to determine the Hazard Classification for any facility. The type and location of all sprinkler systems are shown on the Fire Zone Drawings.

11.8.3.1 Hydraulically Designed Sprinkler Systems

NFPA 13 will be used to determine water supply demand requirements for hose streams (gpm) and duration (min). Density curves presented in NFPA 13 will be used for calculating sprinkler demand for hydraulically designed systems. The present system is based on a density of 0.19 gp for 2500 square feet, ordinary hazard, Group 3. Light hazard systems a not permitted. For hazard classifications not covered in NFPA 13 an certain other special occupancies or hazards, design density and area coverage will be as specified by other more appropriate standards referenced in NFPA 13 or project- specific requirements as determined by the cognizant DOE fire protection engineer. For ordinary hazard occupancies and above, hose stream requirements will be a minimum of 500 gpm regardless of the hose stream demands listed in the above references unless otherwise specified by the DOE project criteria (6430.1A para 1530-3.3.2). Determination of the adequacy of water supplies will be made on the basis of actual flow test measurements gathered using methods in NFPA 13, Appendix B.

11.8.4 PREACTION AND DRY-PIPE SPRINKLER SYSTEMS

All preaction and dry-pipe sprinkler systems will follow the requirements of NFPA 13 and the specific requirements noted below.

11.8.4.1 Dry-Pipe Sprinkler Systems

In unheated areas or areas subjected to freezing temperatures, dry-pipe systems will be provided. Because of the time delays associated with the release of air in the system, water demands for dry-pipe systems will be computed over areas 30% greater than for comparable wet-pipe systems. Where the area is small, it may be more economical to install an antifreeze system or small dry-pipe system supplied from the wet-pipe system in the heated area (6430.1A para 1530-4.2.2).

11.8.4.2 Preaction Sprinkler Systems

A preaction system will be used where it is particularly important to prevent the accidental discharge of water. Need for such a preaction system will be based on review by, and recommendation of, a professional fire protection engineer. The detection system chosen to activate the preaction valve will have high reliability and a separate alarm/supervisory signal to indicate status. The detection system must be designed to be more sensitive than the closed sprinklers in the preaction system, but should not be so sensitive as to cause false alarms and unnecessary actuation of the preaction valve (6430.1A para 1530-4.2.3).

11.8.5 DELUGE WATERSPRAY SYSTEMS

Deluge waterspray systems will comply with the requirements of NFPA 15. For extra hazard areas and specific hard-to-extinguish fuels, a deluge system may be used to wet down the entire area simultaneously. If quick response is required, deluge system piping may be primed with water. The nozzles must be provided with blowoff caps for water-filled deluge systems (6430.1A para 1530-4.2.4).

11.9 FIRE ALARM AND DETECTION EQUIPMENT

All fire detection and alarm devices will be suitably listed by UL or approved by FM. Devices and systems will comply with NFPA 72A,72B,72C,72D,72E,72F,72G, and72H as applicable (6430.1A para 1530-8.1).

11.9.1 System Design

All fire alarm systems will have the following basic features:

1) Transmission of signals to the DOE facility fire department alarm center and other constantly attended locations in accordance with the appropriate NFPA Signaling Systems Standard
2) Local alarms for the building or zone in alarm
3) Trouble signals as required by the appropriate NFPA Signaling System Standard
4) Emergency battery backup for system operation
5) Electric supervision of all circuits as required by the appropriate NFPA standard
6) Supervisory devices for all critical functions (valve position switches, water level, temperature)
7) Capability of annunciating at least three separate conditions; a) fire alarm, b) a supervisory alarm, c) a trouble signal indicating a fault in either of the first two conditions. Annunciation of each condition will be separate and distinct from the other two.
8) By-pass test switches shall be provided for all smoke detectors which operate dampers, shutdown HVAC equipment, or trip preaction systems.

Fire alarm systems for new DOE buildings will be compatible with those for the DOE complex where the new buildings are located.

11.9.2 Fire Alarm Equipment

The fire alarm equipment will be suitably listed for the combination of detection, control, and actuating devices.

11.9.2.1 Actuating Devices

Alarms that respond to the flow of water will be provided wherever a sprinkler system is installed and will comply with requirements of the NFPA standard for the type of signaling system used (6430.1A para 1530-8.2.2).

A manual fire notification method such as manual fire alarm boxes will be provided and located in accordance with the appropriate NFPA standard.

11.9.3 Automatic Fire Detection Systems

Automatic fire detection systems may be used to supplement or actuate extinguishing systems. Automatic fire detectors will comply with the requirements of NFPA 72E. Detector spacings will be in accordance with NFPA 72E, Appendices A, B, and C.

Heat-actuated detectors will be used when the speed of detection is not the prime consideration, the space is sufficiently confined such the heat buildup is rapid, or ambient conditions do not permit the use other devices.

Flame actuated devices are not deemed necessary for this facility.

Smoke detectors will be installed in all areas where required by the appropriate NFPA standard or by the cognizant DOE fire protection authority. Smoke detectors will be of a type operating on one of the principles described in NFPA 72E. A mixture of detector types may be appropriate. Location and required spacing of smoke detectors will be determined by the methods of NFPA 72E and its Appendix C. Spacing will be based on threshold fire size, growth rate, and ceiling height as described in the standard.

11.10 FIRE BARRIERS

Confinement systems, particularly the building shell and its associated ventilation system, will be designed with the capability of retaining the confinement function during a DBF.

11.10.1 Firewalls

Wherever practical, facilities will be designed and constructed using building components of fire-resistant and noncombustible material, particularly in locations vital to the functioning of confinement systems. To the extent practicable, combustible materials will not be used in the construction of process system confinement barriers. Whenever the maximum possible fire loss exceeds $25 million, the area will be subdivided with free-standing fire rated walls or suitable

redundant fire protection systems to limit the credible loss to less than $25 million, even in the event the primary system fails. In no case will the maximum loss potential exceed the $75 million loss limit established in DOE 5480.7; failure-proof systems such as physical separations will be provided to prevent this possibility.

11.10.1.1 Interior Walls and Partitions

Fixed partitions will be provided for corridors and office space unless movable partitions are functionally and economically justified and satisfy the fire safety and other health and safety requirements. Where movable partitions are used, module dimensions will be selected from commercial stock sizes. Where appropriate, the use of partial height partitions extending from the top of mutual-use pipe chases to the ceiling or slab above will be considered to maximize consolidation of pipe runs, and flexibility in operations, and construction economies (6430.1A para 0110-99.0.5).

11.10.1.2 Fire Resistance

The DBFA was developed considering conditions that may exist during normal operations and under special conditions (e.g., during periods of decontamination, renovation, modification, repair and maintenance.) The structural shell surrounding the critical areas and their supporting members will remain standing and continue to act as a confinement barrier during the DBF under conditions of failure of any fire suppression system not designed as a safety class system. Fire resistance of this shell will be attained by an integral part of the structure (concrete slabs, walls, beams, and columns) and not by a composite assembly (membrane fireproofing). In no event will the fire-resistant rating be less than two hours under conditions of failure of any fire suppression system not designed as a safety class item. Penetration in this shell will incorporate, as a minimum, protection against DBF exposures unless greater protection is required by other sections of these criteria (6430.1A para 0110-99.0.6).

11.10.1.3 Loss Limitations

The design will provide sufficient structural integrity, fire resistance, compartmentalization (plus other engineered safety systems) to limit the loss to less than $25 million where safety systems do not function properly.

11.10.2 Fireproofing

Fireproofing will be provided in those areas necessary to satisfy the requirements to ensure the safety of the facility and the personnel. To ensure that redundant safety class components will be capable of performing the necessary safety functions, the facility design will include the appropriate separation against fire, explosion, and failure of fire suppression systems (6430.1A para 1530-99.0).

11.10.2.1 Structural steel will be fireproofed in accordance with the requirements of ASTM E-119, UBC, and other requirements as necessary to satisfy the

requirements of the facility. Confinement systems, particularly the building structural shell and its associated ventilation system, will be fireproofed with the capability of retaining the function during the DBF.

Fireproofing materials will be listed by Underwriters Laboratories and appear in their current product directories or be approved by the Factory Mutual and appear in their current approval guides.

11.10.2.2 Ventilation systems and their supports, necessary to maintain the confinement capabilities of the facility will be fireproofed in accordance with the requirements of ANSI N290, DOE 6430.1A, and ASTM E-119.

11.10.2.3 Safety class systems, which need to remain operational following a DBF, will be fireproofed in accordance with the requirements of DOE 6430.1A and ASTM E-119. Structural elements, which are required to maintain their integrity during a DBF, will be fireproofed as described above. This applies to systems and components which are located above safety class systems.

11.10.3 Fire Doors and Fire Dampers

All closable openings in firewalls and ventilation systems penetrating rated fire separations will be provided with fire doors or fire dampers of the appropriate ratings.

11.10.3.1 Fire doors in three-hour fire walls will be Class A, two-hour Class B, and one-hour Class C. Fire doors and other closable openings are not permitted in four-hour fire rated walls. Stairwells require 1-hour, Class B fire doors. All fire doors will be tested in accordance with the requirements of ASTM E-119 and be listed by Underwriters Laboratories or approved by Factory Mutual.

11.10.3.2 Fire dampers will be tested in accordance with the requirements of ASTM E-119 and listed by Underwriters Laboratories or approved by Factory Mutual. Fire dampers will be provided only where closure will not prevent the functioning of safety class systems in fire rated separations necessary for confinement. Operation may be by thermal link or automatically from the fire protection system.

11.10.4 Fire Rated Penetrations

Penetrations in fire rated separations will be sealed with fire rated materials which have been tested in accordance with the requirements of ASTM E-119 and listed by the Underwriters Laboratories or approved by Factory Mutual. All materials will be suitable for the fire rating of the wall, floor or ceiling.

11.10.5 Firestops

Firestops will be provided at each floor of vertical pipe chases to prevent migration between floors. Firestops will be of material tested in accordance with the requirements of ASTM E-119.

SECTION 12.0

RADIATION AND SHIELDING

TABLE OF CONTENTS

Section			Page
12.0	RADIATION AND SHIELDING		1
12.1	SCOPE		1
12.2	CODES AND STANDARDS		1
12.3	GENERAL CONSIDERATIONS		2
12.4	RADIATION AND SHIELDING DESIGN CONSIDERATIONS AND STANDARD PRACTICES		2
	12.4.1	DESIGN CONSIDERATIONS	2
	12.4.2	STANDARD PRACTICES	3
12.5	SPECIFICATIONS		3
12.6	DRAWINGS		3
12.7	SHIELDING CALCULATION		3
	12.7.1	METHODS	3
	12.7.2	QA PROGRAM VERIFICATION/VALIDATION	4
12.8	RESULTS		5
12.9	SHIELDING REFERENCE FEED RADIOLOGICAL CHARACTERISTICS		6
	12.9.1	RADIONUCLIDE CONTENT FOR SHIELDING CALCULATIONS	6
	12.9.2	SHIELDING REFERENCE FEED/PHOTON GROUPINGS	6
12.10	MATERIAL PROPERTIES		7
12.11	INTERNAL SOURCES OF INFORMATION		9
12.12	BIBLIOGRAPHY		10

THIS PAGE INTENTIONALLY
LEFT BLANK

12.0 RADIATION AND SHIELDING

12.1 SCOPE

Biological shielding provides protection against the effects of ionizing radiation during the operation and maintenance of the facility. The intensity and characteristics of the radiation must be identified and quantified to permit the design of systems, equipment, and structures which can be operated, maintained, and ultimately decommissioned in a safe manner. The Radiation and Shielding design will encompass the following activities:

- All structures which house radioactive materials will be designed such that radiation levels in areas that will be occupied by personnel are maintained at, or below, the limits established by criteria and regulations. This will be accomplished by shielding with appropriate materials and by configuration, where feasible.

- Radiation levels will be determined, where necessary, for purposes of materials selection (where special materials of high radiation resistance are required).

- Information generated by Radiation and Shielding calculations will support and influence the many studies and designs of other disciplines. This will include the application of the ALARA (as low as reasonably achievable) approach where the safety benefits are compared with cost effects.

12.2 CODES AND STANDARDS

Concrete shielding will be used to provide primary protection from radiation. Lead, steel and other materials will be used, as needed, in locations where space limitations preclude the use of concrete. The radiation and shielding basis for design will conform with the following criteria and standards.

- ANSI N101.6, American National Standard for Concrete Radiation Shields, December 22, 1972.

- DOE/EV/1830-T5, A Guide to Reducing Radiation Exposure to as Low as Reasonably Achievable (ALARA), April 1980.

- DOE Order 5480.5, Safety of Nuclear Facilities, August 13, 1981.

- DOE Order 5480.1A, Chapter XI, Requirements for Radiation Protection, August 13, 1981.

- DOE Order 6430.1A, General Design Criteria Manual, December 12, 1983.

- SD-HWV-DP-001, Hanford Waste Vitrification Plant Technical Data Package, or latest revision.

- SD-HWV-FDC-001, Section 4.1.5, Hanford Waste Vitrification Plant Functional Design Criteria, 1985.

- HEDL TC-846, Rev. 1, New Facility Shielding Design Criteria.

The design maximum exposure dose rate will be established to limit radiation dosage to an individual worker to a value not exceeding an annual exposure of 1000 millirem (mR). In order to achieve this limit, various areas in the building have been designated into Access Zone Categories in which maximum allowable design exposure rates have been established based upon access times allowed. The table below, which is reproduced from Section 12 of SD-HWV-DP-001, identifies these areas and will be used as the criteria for which design dose rates will be established in the shielding design. Further details are available in HEDL TC-846, Rev. 1, "New Facility Shield Design Criteria."

Shielding Design Criteria

Area	Access Zone Category*	Access Time Allowed	Max. Design Exposure Rate (mrem/hr)
Uncontrolled		Not restricted	0.1
Controlled Access			
Controlled Zones	1	Full time	0.2
Radiation Zones	2	Less than 1 hr/day	2
	3	Less than 1 hr/wk	10
	4	Less than 5 hr/yr	100
	5	Less than 1 hr/yr	500
Normally Inaccessible	6	Not permitted	>500

*Not to be confused with ventilation zones.

12.3 GENERAL CONSIDERATIONS

Personnel safety is the overriding consideration for Radiation and Shielding design. An effective shielding design must reasonably provide adequate protection during both plant operations and maintenance periods. As such, it is closely allied with the continuous activities of radiation monitoring, contamination control, and remote maintenance.

12.4 RADIATION AND SHIELDING DESIGN CONSIDERATIONS AND STANDARD PRACTICES

12.4.1 DESIGN CONSIDERATIONS

Shielding design requires the following information:

(1) Radiation source characteristics
(2) Geometric configuration with dimensions
(3) Materials composition and density
(4) Allowable radiation levels.

A more detailed discussion is found in Section 12.7.

12.4.2 STANDARD PRACTICES

The calculations are performed using industry-accepted computer codes and are assembled for review and documentation as explained in Section 12.8.

12.5 SPECIFICATIONS

N/A

12.6 DRAWINGS

N/A

12.7 SHIELDING CALCULATION

12.7.1 METHODS

Fluor Daniel uses a variety of calculational methods and computer codes for radiation and shielding calculations. The calculations will identify the assumptions used to model the geometry, the source characteristics, and other pertinent data. The calculations will reflect the definitive design detail available at the time the calculation is made. As design features change or become better defined, the calculations will be updated to ensure conformance with the criteria or regulations. Fluor Daniel will select the most appropriate code for the particular problem.

The mainframe codes, which are listed below, are immediately available; however, the availability and utility of microcomputer methods have greatly reduced their use. The mainframe codes are maintained primarily as backups and for occasional use as an independent cross-check.

The microcomputer codes, which are listed below, have eliminated, in most part, the need to run mainframe codes. The mainframe codes are listed below only in case their use is appropriate for special problems that might develop during design. Microshield and ISOSHLD codes are used in cases where the problem can be described in standard configurations that these codes are designed to accommodate. The QAD-CGGP code is used in cases where the configurations require a nonstandard setup. An example is the evaluation of penetrations and embedments upon the dose rate. Microskyshine is a newly available code which is used to determine the effects of skyshine and scattering.

The following is a list of computer codes currently in use by Fluor Daniel in the performance of radiation, shielding, and related calculations. It is anticipated that only the microcomputer codes will be used on this project.

MAINFRAME

- ORIGEN-2
- SDC
- QAD-P5A
- QAD-CG
- QAD-MOD
- G-36
- ISOSHLD-II
- ANISN

MICROCOMPUTER

- MICROSHIELD
- QAD-CGGP
- ISOSHLD-II
- MICROSKYSHINE
- RADDECAY

12.7.2 QA PROGRAM VERIFICATION/VALIDATION

12.7.2.1 Mainframe Codes - The mainframe codes have been verified by running test problems supplied with the code packages by the Radiation Shielding Information Center (RSIC) at Oak Ridge. The test problem results are shown to be in agreement with the published documentation supplied as part of the code package. This information is documented, dated, retained, and secured by Fluor Daniel's Standards and Procedures Group. Any changes, such as upgrades, corrections, modifications, etc., are incorporated into the documentation following retraining of the verification problems. The control and issue of these changes are the responsibility of the Standards and Procedures Group.

12.7.2.2 Microcomputer Codes - The Microshield and Microskyshine codes are commercially supplied codes which were supplied with verification/validation packages. These packages included test problem sets which compared the results of these programs to those from other industry standard, noncommercial programs for both mainframe and personal computers. The test cases used were the ANSI/ANS-6.6.1 and the ESIS Reference cases. The cases were run on Fluor Daniel equipment using the Microshield codes, the ISOSHLD code, and the QAD-CGGP code, obtaining agreement with the published results. The results were dated, documented, and retained in the various program system documentations. Microskyshine was individually verified using documentation provided. In addition, a modification log is included as a part of the system documentation for each code to maintain a record of updates, corrections, or other changes that might occur over a long period of time. A version number for each program identifies the version used and this data appears on each page of the computer printout.

The procedures, briefly described above, provide compliance with ANSI/ASME to NQA-1.

12.8 RESULTS

The following information is intended to outline a general format which the calculations will follow for documentation. Some deviation from this format should be expected, depending upon the nature of the individual study being performed, especially if this deviation will serve to clarify the work for review and documentation. All calculations will be internally reviewed and verified by a qualified person/persons prior to issue to WHC.

- Statement of Problem - This defines the conditions and objective of the calculation.

- Results and Conclusions - This identifies the results of the calculation and analyzes the impact of the results with respect to both the objective of the problem and compliance to the criteria and regulations.

- Approach and Assumptions - This section identifies possible background data including such things as literature searches. It states any assumptions that were made in order to model the calculation and can possibly define data that must be verified as the design proceeds. It also identifies the computer program that will be used for the calculation.

- Source Description - This identifies the radiation source data that was used in performing the calculation including dilutions, concentrations, densities, materials, and other data that impact the properties of the radiation source such as maximum operating conditions and estimates of residual contamination levels.

- Geometry Description - This section identifies the physical configuration that was used in the mathematical modeling of the problem. It will include dimensional data, material descriptions, and sketches, as required, to establish the calculational model.

- Calculations - The calculations are normally computer outputs which include the following information:

  - Input and output hard copy.

  - Computer program used is identified on each page, complete with revision numbers.

  - Date and time of program execution appear on each page.

  - Review and approval signature blocks appear on each page.

  - The workfile code is identified on each page to provide a convenient means for retrieval of the calculation.

12.9 SHIELDING REFERENCE FEED RADIOLOGICAL CHARACTERISTICS

12.9.1 RADIONUCLIDE CONTENT FOR SHIELDING CALCULATIONS

Table 12-2 from SD-HWV-DP-001, Rev. 4, January 1988 provides a listing of the isotopes and their concentrations in curies per gallon. The isotope concentrations in Table 12.2 refer to a 2.3 wt% oxide concentration in feed to the RLST. This table which is reproduced below will be used for shielding calculations where process conditions have not impacted the chemical composition of the source.

Radionuclide Content for Hanford Waste
Vitrification Plant Shielding Calculations

Isotope	Ci/gal	Isotope	Ci/gal	Isotope	Ci/gal
^{3}H	3.63E-05	^{113}Sn	7.12E-06	^{147}Pm	1.12E+01
^{14}C	2.54E-06	^{115m}Cd	2.48E-09	^{148m}Pm	3.73E-09
^{55}Fe	3.97E-02	^{119m}Sn	1.53E-03	^{151}Sm	2.36E-01
^{59}Ni	3.84E-05	^{121m}Sn	2.99E-05	^{152}Eu	7.74E-04
^{60}Co	1.21E-03	^{123}Sn	8.17E-04	^{153}Gd	3.26E-06
^{63}Ni	4.44E-03	^{126}Sn	1.30E-04	^{154}Eu	9.48E-02
^{79}Se	1.10E-06	^{124}Sb	9.87E-09	^{155}Eu	1.16E-01
^{89}Sr	1.84E-05	^{126}Sb	1.83E-05	^{160}Tb	3.12E-08
^{90}Sr	1.18E+01	^{126m}Sb	1.30E-04	^{234}U	1.36E-06
^{90}Y	1.18E+01	^{125}Sb	4.97E-01	^{235}U	5.56E-08
^{91}Y	2.05E-04	^{125m}Te	1.21E-01	^{236}U	1.34E-07
^{93m}Nb	1.63E-04	^{127}Te	8.34E-04	^{238}U	1.05E-06
^{93}Zr	3.65E-04	^{127m}Te	8.47E-04	^{237}Np	5.63E-05
^{95}Zr	7.80E-04	^{129}Te	1.06E-10	^{238}Pu	2.17E-04
^{95}Nb	1.60E-03	^{129m}Te	1.63E-10	^{239}Pu	3.97E-04
^{99}Tc	2.64E-03	^{129}I	4.60E-09	^{240}Pu	1.53E-04
^{103}Ru	8.42E-08	^{134}Cs	8.44E-01	^{241}Pu	7.28E-03
^{103m}Rh	7.59E-08	^{135}Cs	3.86E-04	^{242}Pu	3.70E-08
^{106}Ru	1.41E+00	^{137}Cs	7.63E+01	^{241}Am	1.63E-01
^{106}Rh	1.41E+00	^{137m}Ba	7.23E+01	^{242}Am	1.17E-04
^{107}Pd	1.15E-05	^{141}Ce	3.19E-09	^{243}Am	1.91E-05
^{110m}Ag	4.50E-04	^{144}Ce	8.42E+00	^{242}Cm	1.41E-04
^{113m}Cd	4.11E-03	^{144}Pr	8.42E+00	^{244}Cm	3.53E-03
^{113m}In	7.12E-06	^{144m}Pr	1.01E-01		
Total activity (Ci/gal)			2.06E+02		

12.9.2 SHIELDING REFERENCE FEED/PHOTON GROUPINGS

The photons from each isotope listed in Section 12.9.1 have been identified and grouped according to their energies. This was done to prepare the data for input to radiation and shielding calculations. The photons per second in the groupings represent the

radiation characteristics for one gallon of reference feed. Multiples or fractions of this set of data will provide the source strength basis for most of the calculations that will be performed. Changes in chemical composition that might occur in some equipment will require independent evaluation. This is especially true in areas in which an accumulation may occur.

The grouping below was produced using the computer program MICROSHIELD using the external files provided by the RADDECAY Program. Gamma photon library is from the Radioactive Decay Data Tables, by D.C. Kocher. The photon groupings include all the isotopes in Section 12.9.1.

Group	*Photon Group Energy (MeV)	Activity (Photons/Sec-Gal)
1	2.1797	2.411 E09
2	1.3756	3.733 E09
3	1.0604	3.181 E09
4	0.6657	2.443 E12
5	0.5827	6.110 E10
6	0.4357	7.702 E09
7	0.3144	8.796 E07
8	0.2314	3.699 E08
9	0.1795	1.314 E09
10	0.1314	3.603 E10

*Represent weight balanced energies.

12.10 MATERIAL PROPERTIES

The physical properties of the materials used for the shields and source are variables which can influence the results of a calculation. The buildup factors and the attenuation coefficients as calculated, or as included in the various codes, depend, to some extent, on the physical properties of the materials. In order to establish consistency and to keep current with technology, the default densities in Microshield will be used, where applicable. The materials and densities for 16 materials which are listed below are consistent with the ANSI-ANS 6.6 values.

material	density (g/cc)	material	density (g/cc)
Air	0.00122	Nickel	8.9
Aluminum	2.702	Tin	7.3
Carbon	2.0	Titanium	4.5
Concrete	2.35	Tungsten	19.3
Hydrogen	0.0008	Urania (UO_2)	11.0
Iron	7.86	Uranium	18.75
Lead	11.3	Water	1.0
Lithium	0.532	Zirconium	6.5

The computer code, QAD-CGGP, requires that materials be input as partial densities of their elemental components. The geometric progression formula is then used to approximate the gamma buildup factors. This capability is also built into the Microshield program. Where possible, this technique will be used as it represents the most current technology and has been endorsed by working group ANS-6.4.3.

The partial densities for some common materials expected to be used on the HWVP project are listed below. If other material mixtures arise during the course of the project, they will be added in the same manner.

FRACTIONAL DENSITIES				
ATOMIC NUMBER	ELEMENT	HWVP REFERENCE GLASS	MAGNETITE CONCRETE	ORDINARY CONCRETE
1	HYDROGEN		0.0109	0.0234
3	LITHIUM	0.046		
5	BORON	0.102		
6	CARBON			0.0023
7	NITROGEN			
8	OXYGEN	1.302	1.1669	1.2431
11	SODIUM	0.202		0.0376
12	MAGNESIUM	0.017	0.0219	0.0047
13	ALUMINUM	0.059	0.1058	0.0799
14	SILICON	0.631	0.1276	0.7919
15	PHOSPHORUS		0.0062	
16	SULFUR		0.0062	
19	POTASSIUM			0.0305
20	CALCIUM	0.054	0.0255	0.1033
22	TITANIUM		0.1021	
24	MANGANESE	0.024	0.0026	
25	CHROMIUM			
26	IRON	0.203	1.8416	0.0329
TOTAL DENSITY		2.64 gm/cm^3	3.42 gm/cm^3	2.35 gm/cm^3

12.11 INTERNAL SOURCES OF INFORMATION

A number of information sources that are generated internally during the course of design will be used to support the shielding design. Some of the primary sources are identified below, along with a short discussion of their typical applicability.

- Flow Diagrams

  Flow diagrams illustrate the process stream and identify each piece of unit equipment. The flow diagrams are useful to allow the Shielding Engineer to understand the process, the chemistry involved in the process, and other pertinent information.

- Material Balances

  Material Balances are used to define the quantity and chemical makeup of the process fluids as they exist in strategic points in the process system. Changes in chemical composition which alter the radioactive composition are identified so that the radiation characteristics can be changed accordingly. This is especially useful in locations where an accumulation of radioactive constituents is possible.

- Process Data Sheets

  Equipment data sheets, among other data, identify dimensions, volumes, and other physical details of equipment which are used to set up the calculational model. The most useful of these the equipment data sheets are the vessel data sheets.

- Drawings

  Structural, architectural, and equipment layout drawings are used to establish the distances from sources to dose receptor points and to identify where multiple sources contribute to a radiation level. Piping and electrical drawings are used to: study penetrations; to identify locations where streaming is a possibility; and identify large pipes which contain enough material to be a significant radiation source.

- Specifications

  Specifications will often identify equipment components which must be protected from radiation damage or changed to a more radiation-resistant material.

- Personal Communication

  A significant source of information is by request or interaction with the engineering disciplines or the cognizant client experts.

12.12 BIBLIOGRAPHY

1. Radiological Health Handbook, U.S. Department of Health, Education and Welfare, Public Health Service, January 1970.

2. Los Alamos Handbook of Radiation Monitoring, LA-4400, 1970.

3. Handbook of Chemistry and Physics, 60th Edition, "Gamma Energies and Intensities of Radionuclides.

4. Miscellaneous Data for Shielding Calculations, APEX 176.

5. The Photon Shielding Manual, 2nd Edition, Anthony Foderaro.

6. Radioactive Decay Data Tables, David C. Kocher, 198, DOE/TIC - 11026.

7. Reactor Shielding Design Manual, Theodore Rockwell, 1956.

8. Reactor Shielding for Nuclear Engineers, N. M. Schaeffer, Editor, 1973.

9. SD-HWV-FDC-001, Hanford Waste Vitrification Plant Functional Design Criteria, June 1985.

10. SD-HWV-DP-001, Hanford Waste Vitrification Plant Technical Data Package, Rev. 4, Section 12, Item 200, ECN-400005 (Revision to Tables 12-1 and 12-2), January 1988.

11. HWVP-0084, HWVP Technical Data Package Change Requests, HWVP-0048 and HWVP-0047.

12. ANSI/ANS-6.6.1-1979, January 1979. American National Standard for Calculation and Measurement of Direct and Scattered Radiation from LWR Nuclear Power Plants.

13. ESIS - European Shielding Information Service, Newsletter #37, April 1981. Specification for Gamma Ray Shielding Benchmark Applicable to a Nuclear Radwaste Facility, ISPRA Establishment, Italy.

14. HEDL TC-846, Rev. 1. "New Facility Shield Design Criteria."