START

ENGINEERING CHANGE NOTICE

0035793

Page 1 of 52

1. ECN 134976L

Proj. ECN

2. ECN Category (mark one)	3. Originator's Name, Organization, MSIN, and Telephone No.		4. Date
Supplemental ☐ ect Revision ☐ ange ECN ☐ Temporary ☒ Supersedure ☐ Discovery ☐ Cancel/Void ☐	D.W. Bergmann/PUREX Systems & Technology/S6-01/3-4618		10/1/89
	5. Project Title/No./Work Order No.	6. Bldg./Sys./Fac. No. PUREX	7. Impact Level 2
	8. Document Number Affected (include rev. and sheet no.) SD-HS-SAR-001, Rev. 5	9. Related ECN No(s). N/A	10. Related PO No. N/A

11a. Modification Work	11b. Work Package Doc. No.	11c. Complete Installation Work	11d. Complete Restoration (Temp. ECN only)
☒ Yes (fill out Blk. 11b) ☐ No (NA Blks. 11b, 11c, 11d)	9221005	Cog. Engineer Signature & Date	Cog. Engineer Signature & Date

12. Description of Change

The attached Safety Evaluation for the Process Distillate Discharge transfer to Tank Farms is being issued as a Temporary Addendum to the PUREX Safety Analysis Report. This document identifies the operating requirements of the subject system.

9413219.1534

APPROVED FOR PUBLIC RELEASE

13a. Justification (mark one)	13b. Justification Details
Criteria Change ☒ Design Improvement ☐ Environmental ☐ As-Found ☐ Facilitate Const. ☐ Const. Error/Omission ☐ Design Error/Omission ☐	The attached addendum is required to update the PUREX Safety Analysis Report to reflect the temporary routing of Process Distillate Discharge to Tank Farms during the stabilization run.

14. Distribution (include name, MSIN, and no. of copies)

See attached.

APR 1994 RECEIVED EDMC

RELEASE STAMP

OFFICIAL RELEASE BY WHC 28

DATE OCT 05 1989

Sta # 1

A-7900-013 (11/88)

ENGINEERING CHANGE NOTICE

1. ECN (use no. from [redacted]) 134776 L

15. Design Verification Required	16. Cost Impact				17. Schedule Impact (days)	
	ENGINEERING		CONSTRUCTION			
☐ Yes	Additional ☐	$ N/A	Additional ☐	$ N/A	Improvement ☐	N/A
☒ No	Savings ☐	$ N/A	Savings ☐	$ N/A	Delay ☐	N/A

18. Change Impact Review: Indicate the related documents (other than the engineering documents identified on Side 1) that will be affected by the change described in Block 12. Enter the affected document number in Block 19.

SDD/DD	☐	Seismic/Stress Analysis	☐	Tank Calibration Manual	☐
Functional Design Criteria	☐	Stress/Design Report	☐	Health Physics Procedure	☐
Operating Specification	☐	Interface Control Drawing	☐	Spares Multiple Unit Listing	☐
Criticality Specification	☐	Calibration Procedure	☐	Test Procedures/Specification	☐
Conceptual Design Report	☐	Installation Procedure	☐	Component Index	☐
Equipment Spec.	☐	Maintenance Procedure	☐	ASME Coded Item	☐
Const. Spec.	☐	Engineering Procedure	☐	Human Factor Consideration	☐
Procurement Spec.	☐	Operating Instruction	☐	Computer Software	☐
Vendor Information	☐	Operating Procedure	☒	Electric Circuit Schedule	☐
OM Manual	☐	Operational Safety Requirement	☐	ICRS Procedure	☐
FSAR/SAR	☐	IEFD Drawing	☒	Process Control Manual/Plan	☒
Safety Equipment List	☐	Cell Arrangement Drawing	☒	Process Flow Chart	☐
Radiation Work Permit	☐	Essential Material Specification	☐	Purchase Requisition	☐
Environmental Impact Statement	☐	Fac. Proc. Samp. Schedule	☒		☐
Environmental Report	☐	Inspection Plan	☐		☐
Environmental Permit	☐	Inventory Adjustment Request	☐		☐

19. Other Affected Documents: (NOTE: Documents listed below will not be revised by this ECN.) Signatures below indicate that the signing organization has been notified of other affected documents listed below.

Document Number/Revision	Document Number/Revision	Document Number/Revision
WHC-CM-5-24, Add. I, 6/28/87	H-2-63250	PO-180-170
FSS-P-080-00002	H-2-63272	PO-380-006

20. Approvals

	Signature	Date		Signature	Date
OPERATIONS AND ENGINEERING			**ARCHITECT-ENGINEER**		
Cog./Project Engineer	DW Bergmann	10/2/89	PE		
Cog./Project Engr. Mgr.	RJ Thompson	10/2/89	QA		
QA	VL Wagner	10-3-89	Safety		
Safety	RW Szempruch	10/3/89	Design		
Security			Other		
Proj.Prog./Dept. Mgr.	MA Payne FOR MAR	10/4/89			
Def. React. Div.					
Chem. Proc. Div.					
Def. Wst. Mgmt. Div.		10/4/89	**DEPARTMENT OF ENERGY**		
Adv. React. Dev. Div.					
Proj. Dept.					
Environ. Div.	DB Howe	10-4-89	**ADDITIONAL**		
IRM Dept.					
Facility Rep. (Ops)	SD Godfrey	10-3-89			
Other	NR Miller SEAC	10/4/89			

9413219.1536

SAFETY EVALUATION

PROCESS DISTILLATE DISCHARGE TO TANK FARMS

SAFETY EVALUATION
PROCESS DISTILLATE DISCHARGE TO TANK FARMS

APPROVALS

D. W. Bergmann, Cognizant Engineer PUREX Systems & Technology	10/2/89 Date
D. G. Baide, Manager, Double-Shell Tanks Process Engineering Unit	10/4/89 Date
S. D. Godfrey, Manager, PUREX Process Systems	10/4/89 Date
For M. A. Payne, Manager, PUREX Plant	10/4/89 Date
J. M. Siemer, Engineer Facilities Systems Safety Analysis	10/2/89 Date
R. W. Szempruch, Manager, PUREX Nuclear Safety	10/3/89 Date
R. J. Thompson, Manager, PUREX Systems & Technology	10/2/89 Date

SAFETY EVALUATION
PROCESS DISTILLATE DISCHARGE TO TANK FARMS

TABLE OF CONTENTS

1.0 INTRODUCTION 5
1.1 GENERAL PROCESS DESCRIPTION 5
1.2 REQUIRED EQUIPMENT 7

2.0 PROCESS CONTROL 8
2.1 pH CONTROL SYSTEM 8
2.2 STREAM CHARACTERIZATION SAMPLING AND CALIBRATION CONTROLS . . . 11
2.3 PROCESS DISTILLATE DISCHARGE COMPOSITION 11

3.0 ACCIDENT EVALUATION 16
3.1 ACIDIC PROCESS DISTILLATE DISCHARGE 16
3.2 TRANSFER LINE LEAK IN PUREX 17
3.3 SEISMIC EVENT 17

4.0 SAFETY ISSUES 17
4.1 RADIATION 17
4.2 CRITICALITY 17
4.3 INDUSTRIAL SAFETY 18
4.3.1 Fire Hazards 18
4.3.2 Chemical Hazards 19
4.4 CONSTRUCTION HAZARDS 19
4.5 ENVIRONMENTAL RELEASES 19

5.0 SYSTEM CLASSIFICATION 20
5.1 IMPACT LEVEL 20
5.2 SAFETY CLASSIFICATION 20
5.3 HAZARDS CLASSIFICATION 20

6.0 PROCESS CONTROL MANUAL REQUIREMENTS 21
6.1 TANK G7 PLUTONIUM CONCENTRATION LIMITING CONDITION OF OPERATION 21
6.1.1 Requirement 21
6.1.2 Discussion 21
6.2 TANK G7 TEMPERATURE LIMITING CONDITION OF OPERATION 22
6.2.1 Requirement 22
6.2.2 Discussion 22
6.3 AMMONIA SCRUBBER FEED NEUTRALIZATION IN TANK G7 LIMITING CONTROL SETTING 23
6.3.1 Requirements 23
6.3.2 Discussion 23
6.4 CHEMICAL ADJUSTMENT LIMITING CONTROL SETTING 23
6.4.1 Requirement 23
6.4.2 Discussion 23
6.5 MAXIMUM TRANSFER TEMPERATURE LIMITING CONTROL SETTING 23
6.5.1 Requirement 23

6.5.2 Discussion 24
6.6 DISCHARGES TO CRIB PH LIMITING CONDITION OF OPERATION 24
6.6.1 Requirement 24
6.6.2 Discussion 24
6.7 PROCESS DISTILLATE DISCHARGE PH PROBE OPERABILITY LIMITING CONDITION OF OPERATION 24
6.7.1 Requirement 24
6.7.2 Discussion 25
6.8 ADMINISTRATIVE CONTROL SYSTEMS 25
6.9 NEW PROCESS DISTILLATE DISCHARGE pH LIMITING CONTROL SETTING . . 25

7.0 CONCLUSIONS 25

8.0 REFERENCES 26

FIGURES

1 Process Distillate Discharge Transfer System. 6
2 pH Control System 9
3 Process Distillate Discharge to Tank Farms. 10
4 Characterization Sampling and Calibration Controls. 12

TABLES

1 Tank Farms Specifications 7
2 Process Distillate Discharge Stream Radioactive Constituents Before Chemical Adjustment. 13
3 Process Distillate Discharge Stream Radioactive Constituents After Chemical Adjustment 14
4 Process Distillate Discharge Stream Radioactive Constituents. 15
5 Maximum Monthly Fissionable Material Content of Process Distillate Discharge. 18
6 Impact Level/Safety Class Designation 20
7 Plutonium Concentration of Process Distillate Discharge 22

APPENDIX

A pH control Response Calculations
B Fault Tree Analysis
C Dose Impacts from Process Distillate Discharge Header
D Summary of Operating Requirements

SAFETY EVALUATION
PROCESS DISTILLATE DISCHARGE TO TANK FARMS

1.0 INTRODUCTION

The Process Distillate Discharge (PDD) stream is normally discharged to the A-45 crib during the PUREX solvent extraction operation. The recent discovery that the PUREX process may have received listed wastes has initiated an environmental review of past practices. The present condition of the plant requires that a stabilization run be performed before this environmental review will be completed. To allow operating before this review is completed, a transfer route will be installed to send the PDD to Tank Farms for interim storage. This report establishes the operating requirements for the PDD to Tank Farms temporary transfer system during the stabilization run.

This report does not address impacts from storage of the PDD at Tank Farms, or constitute approval for shipment. The acceptance of PDD transfers and review of Tank Farm operational impacts will be addressed by Defense Waste Management.

9413219.1540

1.1 GENERAL PROCESS DESCRIPTION

The PDD stream is the process condensate from the E-K4 concentrator located in K-Cell of the PUREX canyon. The condensate from the E-K4-2 condenser enters the K4 Sample Pot. Previously, the K4 Sample Pot continuously overflowed through a route which discharged to the 216-A-45 crib. A small stream of potassium hydroxide was added to the Sample Pot to raise the pH prior to discharge.

This system will be temporarily modified to route the PDD stream to a 15,000 gallon tank, TK-G7, and then to Tank Farms for storage (Figure 1). The condensate will still be collected in the K4 Sample Pot, but the Sample Pot will now be continuously pumped out of the PUREX canyon through a new route in the PUREX Sample Gallery. This route runs overhead down the Sample Gallery and back into the canyon, where the solution is discharged into TK-G7. The solution is transferred from TK-G7 to Tank Farms using the existing ammonia scrubber feed (ASF) route.

A weight factor control system in the K4 Sample Pot will adjust the PDD flow to maintain a constant level in the Sample Pot. This prevents the transfer pump from running dry.

Sodium hydroxide/sodium nitrite will be added to the K4 Sample Pot to ensure the PDD meets Tank Farm specifications for receipt into mild-steel underground storage tanks (Table 1 and Reference 1). A pH probe on the transfer line will monitor the composition of the PDD. The mixture of sodium hydroxide and sodium nitrite will be made up in aqueous make-up tank TK-105 and transferred to TK-153 where it will be metered into the K4 Sample Pot through an existing control valve. Sodium hydroxide/sodium nitrite will also be added to TK-G5A for batch addition to TK-G7 should the need arise. Tank G7 will be sampled routinely to confirm that Tank Farm specifications are met. These samples will

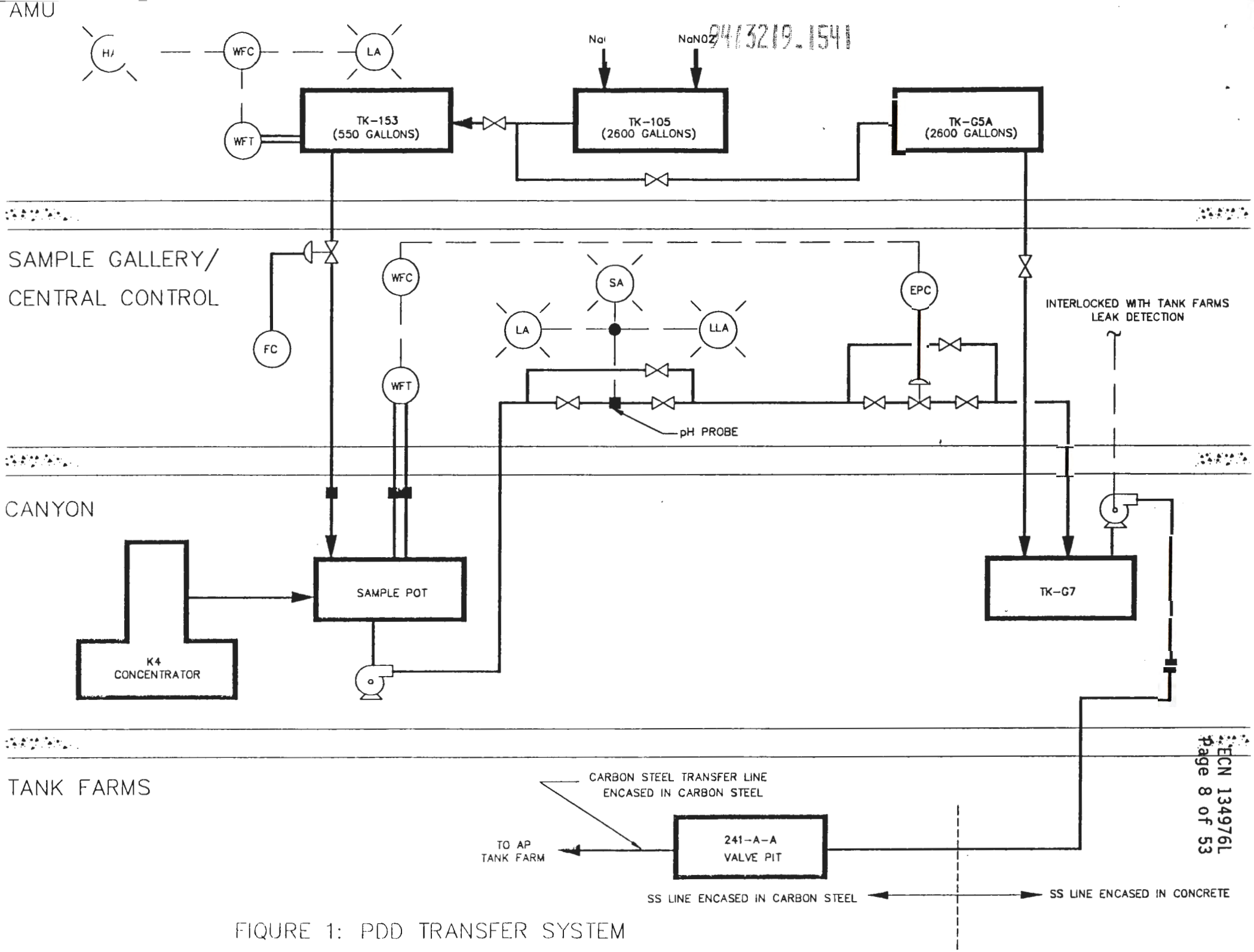

FIGURE 1: PDD TRANSFER SYSTEM

94/3219.1541

Table 1. Tank Farm Specifications

Component	Specification
OH^-	$.01\underline{M} \leq [OH^-] \leq 5.0\underline{M}$
NO_2	$.011\underline{M} \leq [NO_2^-] \leq 5.5\underline{M}$

*For $[NO_3] \leq 1.0\underline{M}$. Typical $[NO_3]$ for the PDD is approximately $.005\underline{M}$

be the primary method of ensuring that the Tank Farm specifications are met; the pH probe will serve as a process control device.

1.2 REQUIRED EQUIPMENT

The major pieces of equipment which will be used for the transfer system are:

1. A new K4 Sample Pot. A "spare" J8 Sample Pot will be modified for this purpose. The overflow line will be blanked to prevent discharges to the A-45 crib.

2. A jumper-mounted pump to transfer the PDD to TK-G7.

3. Tank G7 and a pump for final transfer to Tank Farms. This equipment exists and requires no modifications.

4. A pH probe and the associated instrumentation to tie into the K-Cell distributive control system.

5. A system for adding sodium hydroxide/sodium nitrite to the K4 Sample Pot. This equipment exists. The only modifications required will be the fabrication of a new jumper to tie into the new K4 Sample Pot.

6. Weight factor control system for the K4 Sample Pot. This system will adjust the PDD flow to maintain a constant level in the Sample Pot, ensuring that the pump will not run dry.

7. Two hundred forty feet of 2 in. Schedule 40S stainless steel piping. This new piping run will be installed in the Sample Gallery to transfer neutralized PDD from the K4 Sample Pot to TK-G7.

8. Aqueous make-up tanks for sodium hydroxide/sodium nitrite make-up and additions. Existing tanks (TK-105, TK-153, and TK-G5A) will be used for this purpose. No modifications are necessary. Tank 153 will

provide continuous sodium hydroxide/sodium nitrite adjustment while TK-G5A will operate on a demand basis.

2.0 PROCESS CONTROL

2.1 pH CONTROL SYSTEM

To ensure that the applicable Operational Safety Requirements (OSRs), Limiting Condition of Operations (LCOs), and Limiting Control Settings (LCSs) are met, the following pH control system will be implemented for the PDD to Tank Farms transfer (Figure 2).

A four element system will be used to control/monitor the pH of the PDD being discharged to Tank Farms. These elements are: (1) sodium hydroxide addition to the K4 Sample Pot, (2) an in-line pH probe on the K4 to TK-G7 transfer line, (3) sampling of TK-G7, and (4) sodium hydroxide/sodium nitrite addition to TK-G7. The existing K4 Sample Pot sodium hydroxide addition equipment will be used as the primary pH adjustment system. The position of the flow control valve will be manually controlled by operating personnel based on readings from the in-line pH probe. Sodium hydroxide/sodium nitrite will also be added directly to TK-G7 from TK-G5A as a back-up pH adjustment in response to pH samples and alarms.

9413219.1543

The in-line pH probe will serve a dual purpose: (1) as the primary pH control device, and (2) a low pH indicator. This device will be equipped with a low alarm, a low-low alarm, and a safety alarm. The alarms will be set at a pH of 12.0, 11.0 and 10.0, respectively. The reponse/recovery actions for all three alarm conditions are listed in Figure 3.

Tank G7 will be sampled once every four hours. Once adequate pH control is demonstrated, sampling frequencies may decrease to once every eight hours. Tank G7 samples will be used to ensure that the pH probe is reading properly, and as a record of the actual pH being discharged to Tank Farms. Additional sampling of TK-G7 will be performed in the event that a low-low or safety alarms are activated.

The flowrate of neutralized process condensate from the K4 Sample Pot will typically be 25-30 gpm. Peak flow conditions as high as 45 gpm could be seen during condensate recycle start-up.

The process response time for a sodium hydroxide addition system failure indicates the pH in TK-G7 will drop to a pH of 10 after 13 hours, (assumes 6,000 gallons of solution in TK-G7 and PDD flow of 30 gpm). Additionally, under the same conditions, a pH of 10.0 would be seen at the pH probe in ten minutes. Calculations are attached in Appendix A.

To ensure that sufficient response times are maintained a minimum tank volume of at least 3,000 gallons will be specified in operating procedures.

9413219.1544

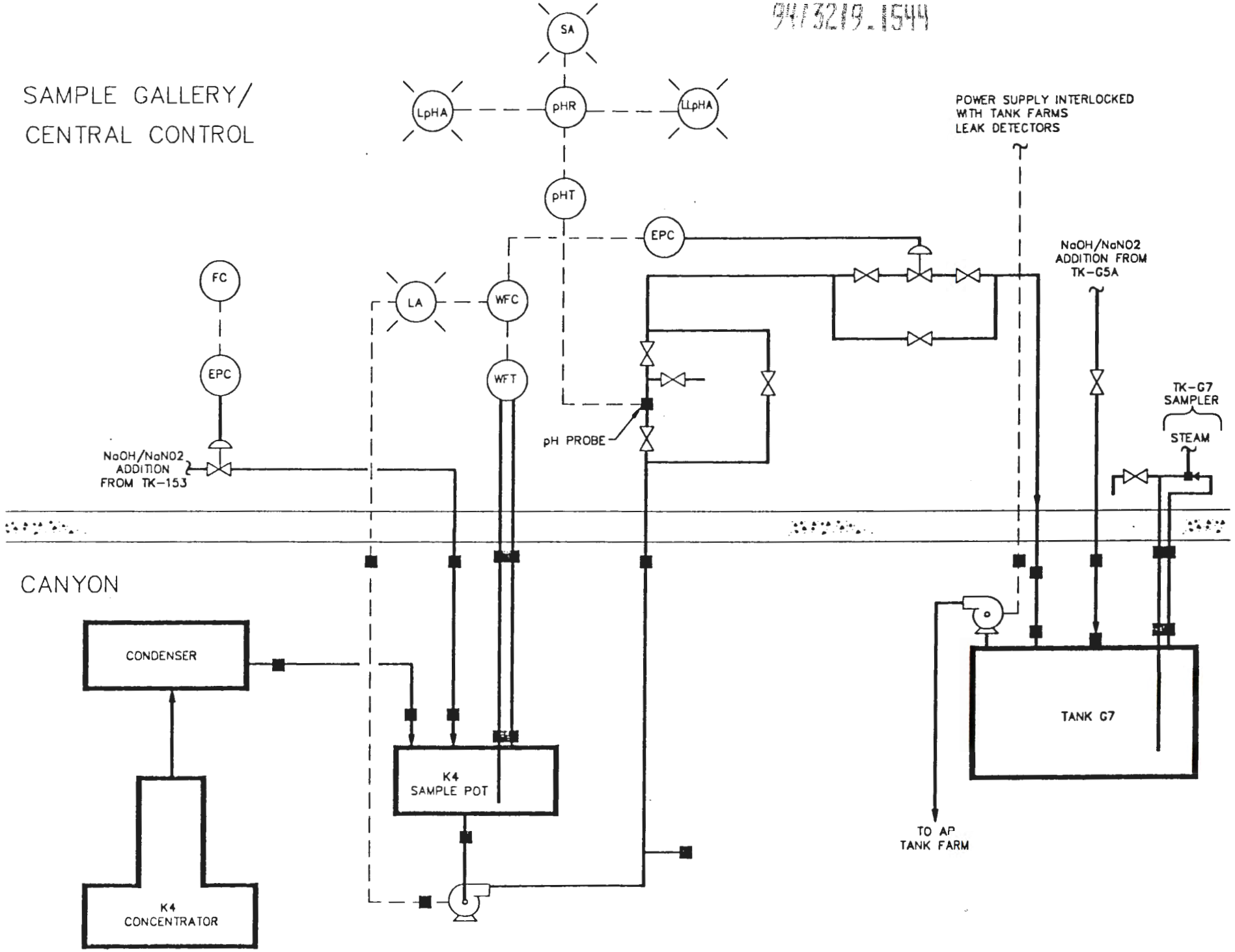

FIGURE 2: pH CONTROL SYSTEM

pH PROBE ALARM RESPONSES

Low pH Alarm/Set Point, pH = 12.0

- Adjust sodium hydroxide/sodium nitrite flow K4 Sample Pot
- If pH is less than 12.0 for one hour, follow low-low alarm responses

Low-Low pH alarm/Set Point, pH = 11.0

- Add sodium hydroxide/sodium nitrite to TK-G7 (calculated volume)
- Adjust sodium hydroxide/sodium nitrite flow to K4 Sample Pot
- Sample TK-G7
- If pH is less than 11.0 for one hour, follow safety alarm responses

Safety Alarm/Set Point, pH = 10.0

- Shutdown transfer to Tank Farms
- Notify Tank Farms
- Add sodium hydroxide/sodium nitrite to TK-G7 (calculated volume)
- Adjust sodium hydroxide/sodium nitrite flow to K4 Sample Pot
- Sample TK-G7
- Wait for sample results. If pH >12.0 and $[NO_2]$ > .011M obtain approval from Tank Farms to restart transfer

TANK G7 pH SAMPLE ANALYSIS RESPONSES

Process Control Limit, pH = <12.0

- Add sodium hydroxide/sodium nitrite to TK-G7 (calculated volume)
- Resample TK-G7. If pH is less than 12.0, initiate control feature limit responses

Control Feature Limit, pH = <11.0

- Shutdown transfer to Tank Farms
- Notify Tank Farms
- Add sodium hydroxide/sodium nitrite to TK-G7 (calculated volume)
- Adjust sodium hydroxide/sodium nitrite flow to K4 Sample Pot
- Sample TK-G7.
- Wait for sample results. If pH >12.0 and $[NO_2]$ >.011M, obtain approval from Tank Farms to restart transfer

FIGURE 3. PROCESS DISTILLATE DISCHARGE TO TANK FARMS

9413219.1545

The PDD to Tank Farms transfer can be maintained during a pH probe failure for a maximum of 16 hours, provided the following conditions are immediately implemented.

1. Tank G7 is sampled once every two hours.

2. Surveillance on TK-153 drop-out rate is increased.

Failure to restore operation of the pH probe will require the shut down of the PDD to Tank Farms transfer system.

2.2 STREAM CHARACTERIZATION SAMPLING AND CALIBRATION CONTROLS

Two conditions exist which will require a minimum of one of the control features in the PDD to Tank Farms pH control system to be deactivated. These situations are:

1. Characterization sampling of the PDD. The PUREX Plant has committed to the Washington State Department of Ecology to provide post-1987 PDD characterization samples.

2. Calibration of pH probe. Required to ensure accurate monitoring of K4 Sample Pot pH.

The required frequencies for each of these events will be weekly.

To ensure that an acidic solution is not discharged during calibration or characterization sampling the steps outlined in Figure 4 will be followed. The fault tree analysis in Appendix B determined that the probability of an acidic solution being discharged during calibration and characterization sampling to be 6.1×10^{-6} and 5×10^{-4} occurrences during the stabilization run (assumed duration of six weeks), respectively.

2.3 PROCESS DISTILLATE DISCHARGE COMPOSITION

The only changes in the PDD composition during the stabilization run will be the required chemical additives for storage at Tank Farms. These chemicals, sodium nitrite and sodium hydroxide, will be added to meet the requirements of Reference 1 (Table 1). The intent of Reference 1 is to prevent excessive corrosion of the mild-steel storage tanks and transfer lines. The expected concentrations of the non-radioactive constituents in the PDD before and after neutralization are included in Tables 2 and 3 (Reference 10). The radionuclide concentrations in the PDD will remain unchanged (Table 4 and Reference 2).

The discharge of potentially listed compounds to the PUREX process have ceased. If any of the potentially listed compounds remain in PUREX process streams, they will not be discharged to the environment. The PDD generated during the stabilization run will be stored at Tank Farms until a determination of the actual environmental classification of the PDD is completed.

CHARACTERIZATION SAMPLING OR CALIBRATION

CHARACTERIZATION SAMPLING

- PREPARE TO SAMPLE
- STOP TRANSFER AND NOTIFY TANK FARMS
- ADD SODIUM HYDROXIDE TO TK-G7
- STOP SODIUM HYDROXIDE TO K4
- WATCH pH. pH SHOULD DROP TO 5.0 IN APPROXIMATELY 10 MINUTES
- TAKE SAMPLE
- RESTART SODIUM HYDROXIDE TO K4
- SAMPLE G7
- OBTAIN TANK FARM APPROVAL TO RESTART TRANSFER
- RESTART TRANSFER

CALIBRATION

- PREPARE TO CALIBRATE
- ADD SODIUM HYDROXIDE TO TK-G7
- PERFORM PROBE CALIBRATION
- RETURN PROBE TO SERVICE
- SAMPLE TK-G7

FIGURE 4. CHARACTERIZATION SAMPLING AND CALIBRATION CONTROLS

Table 2. Process Distillate Discharge Stream Non-Radioactive Constituents Before Chemical Adjustment

Analyte	Average	Minimum	Maximum
Alpha Activity (LDL, pCi/L)	3.1E+02	6.3E+00	1.3E+03
Beta Activity (pCi/L)	1.3E+04	3.1E+01	6.8E+04
Acetone (VOA)	4.5E+02	1.1E+02	9.5E+02
Ammonium	1.1E+02	9.4E+01	1.3E+02
Barium	1.3E+01	6.0E+00	2.2E+01
Butraldehyde	1.5E+01	1.2E+01	1.8E+01
Butyl alcohol	2.8E+02	1.4E+01	5.0E+01
Butylnitrate	8.0E+01	2.6E+01	2.4E+02
Cadmium	9.0E+00		
Calcium	6.4E+03	7.6E+01	2.1E+04
Chloride	4.1E+03	1.1E+03	7.8E+03
Chromium	1.4E+01		
Conductivity-Field (uS)	6.0E+02	1.2E+02	1.5E+03
Copper	1.3E+01		
Cyanide	5.9E+01	2.0E+01	1.4E+02
Decane	2.3E+02		
Dodecane	2.0E+04	8.5E+01	7.4E+04
Fluoride (IC)	2.4E+03	7.5E+02	4.0E+03
Iron	2.2E+02	2.1E+02	2.3E+02
Isophorone	1.3E+01		
Magnesium	1.3E+03	1.9E+01	4.6E+03
Manganese	1.2E+01		
Mercury	2.1E+00	1.5E+01	9.0E+00
N-Methoxymethanamine	1.2E+02		
Methylene chloride	3.6E+01	1.3E+01	6.0E+01
Methyl ethyl ketone	4.4E+01	1.4E+01	9.0E+01
Methyl nitrate	2.4E+02		
Methyl vinyl ketone	2.2E+01		
Nickel	1.0E+01		
Nitrate	3.0E+05	2.0E+03	1.7E+06
Nitromethane	8.0E+00		
Pentadecane	1.9E+03	3.0E+02	3.1E+03
pH Field	6.6E+00	2.1E+00	1.1E+01
Potassium	1.0E+03	5.0E+02	1.5E+03
Sodium	9.4E+02	1.2E+02	2.2E+03
Sulfate	3.9E+03	6.3E+02	1.2E+04
Temperature-Field (celsius)	4.0E+01	2.0E+01	4.8E+01
Tetradecane	5.5E+04	4.4E+02	2.0E+05
Tetrahydrofuran	1.9E+01	1.4E+01	2.4E+01
TOC	6.0E+04	1.9E+04	1.5E+05
TOX	2.7E+02		
TOX (LDL)	1.0E+02	4.8E+01	2.1E+02
Tributyl phosphate	1.0E+05	9.5E+03	1.8E+05
Tridecane	6.2E+04	4.3E+02	2.3E+05
Undecane	7.4E+02	5.2E+02	9.5E+02
Unknown	5.2E+03	5.5E+02	9.7E+03
Uranium	2.2E+01	9.9E+01	5.9E+01
Zinc	1.5E+01	7.0E+00	3.2E+01

Table 3. Process Distillate Discharge Stream Non-Radioactive Constituents After Chemical Adjustment

Analyte	Average	Minimum	Maximum
Alpha Activity (LDL, pCi/L)	3.1E+02	6.3E+00	1.3E+03
Beta Activity (pCi/L)	1.3E+04	3.1E+01	6.8E+04
Acetone (VOA)	4.5E+02	1.1E+02	9.5E+02
Ammonium	1.1E+02	9.4E+01	1.3E+02
Barium	1.3E+01	6.0E+00	2.2E+01
Butraldehyde	1.5E+01	1.2E+01	1.8E+01
Butyl alcohol	2.8E+02	1.4E+01	5.0E+01
Butylnitrate	8.0E+01	2.6E+01	2.4E+02
Cadmium	9.0E+00		
Calcium	6.4E+03	7.6E+01	2.1E+04
Chloride	4.1E+03	1.1E+03	7.8E+03
Chromium	1.4E+01		
Conductivity-Field (uS)	6.0E+02	1.2E+02	1.5E+03
Copper	1.3E+01		
Cyanide	5.9E+01	2.0E+01	1.4E+02
Decane	2.3E+02		
Dodecane	2.0E+04	8.5E+01	7.4E+04
Fluoride (IC)	2.4E+03	7.5E+02	4.0E+03
Iron	2.2E+02	2.1E+02	2.3E+02
Isophorone	1.3E+01		
Magnesium	1.3E+03	1.9E+01	4.6E+03
Manganese	1.2E+01		
Mercury	2.1E+00	1.5E+01	9.0E+00
N-Methoxymethanamine	1.2E+02		
Methylene chloride	3.6E+01	1.3E+01	6.0E+01
Methyl ethyl ketone	4.4E+01	1.4E+01	9.0E+01
Methyl nitrate	2.4E+02		
Methyl vinyl ketone	2.2E+01		
Nickel	1.0E+01		
Nitrate	3.0E+05	2.0E+03	1.7E+06
Nitrite	6.9E+05	5.0E+05	8.0E+05
Nitromethane	8.0E+00		
Pentadecane	1.9E+03	3.0E+02	3.1E+03
pH Field	12.3	11.5	12.5
Potassium	1.0E+03	5.0E+02	1.5E+03
Sodium	1.1E+06	4.0E+05	1.8E+06
Sulfate	3.9E+03	6.3E+02	1.2E+04
Temperature-Field (celsius)	4.0E+01	2.0E+01	4.8E+01
Tetradecane	5.5E+04	4.4E+02	2.0E+05
Tetrahydrofuran	1.9E+01	1.4E+01	2.4E+01
TOC	6.0E+04	1.9E+04	1.5E+05
TOX	2.7E+02		
TOX (LDL)	1.0E+02	4.8E+01	2.1E+02
Tributyl phosphate	1.0E+05	9.5E+03	1.8E+05
Tridecane	6.2E+04	4.3E+02	2.3E+05
Undecane	7.4E+02	5.2E+02	9.5E+02
Unknown	5.2E+03	5.5E+02	9.7E+03
Uranium	2.2E+01	9.9E+01	5.9E+01
Zinc	1.5E+01	7.0E+00	3.2E+01

Table 4. PUREX Process Distillate Discharge Radionuclide Content

Isotope	Average Concentration (uCi/ml)	Monthly Maximum Concentration (uCi/ml)
Total Alpha	5.88×10^{-7}	1.38×10^{-6}
Total Beta	5.71×10^{-7}	1.52×10^{-6}
^{3}H	3.38×10^{-2}	1.29×10^{-1}
^{90}Sr	$<9.86 \times 10^{-8}$	$<1.76 \times 10^{-7}$
^{103}Ru	$<3.38 \times 10^{-8}$	$<4.00 \times 10^{-8}$
^{106}Ru	$<4.85 \times 10^{-7}$	$<1.05 \times 10^{-6}$
^{129}I	$<1.21 \times 10^{-7}$	3.36×10^{-7}
^{137}Cs	$<4.9 \times 10^{-8}$	$<5.31 \times 10^{-8}$
^{147}Pm	3.06×10^{-7}	1.20×10^{-6}
U Gross	8.98×10^{-9}	2.26×10^{-8}
^{238}Pu	9.39×10^{-8}	2.18×10^{-7}
$^{239,240}Pu$	6.67×10^{-7}	1.36×10^{-6}
^{241}Pu	1.12×10^{-5}	2.39×10^{-5}
^{241}Am	$<2.70 \times 10^{-7}$	$<1.82 \times 10^{-7}$

9413219.1550

3.0 ACCIDENT EVALUATION

This section will address the three identified accident scenarios, their consequences, and probabilities resulting from the transfer of PDD to Tank Farms.

3.1 ACIDIC PROCESS DISTILLATE DISCHARGE

Failure of the pH adjustment system would result in acidic solution (pH = 4) being transferred to Tank Farms. The transfer of this solution would cause abnormally high corrosion rates in the mild-steel transfer lines and double-shell storage tanks at Tank Farms. Failure of the primary transfer line would result in the activation of the leak detector(s) at Tank Farms. Activation of the leak detector(s) will automatically shut down the PDD transfer by interrupting power to the TK-G7 pump (Reference 4). This type of accident would cause equipment damage only. No environmental releases would occur as a result from this scenario, due to the presence of encasements around the primary transfer line. A schematic of the entire transfer system is included in Figure 1.

Transferring acidic solution to Tank Farms would occur only if all three of the following events occurred:

1. Sodium hydroxide solution to the K4 Sample Pot fails.

2. Operators fail to respond to pH probe alarms. Failure to respond to the alarm condition will not discharge on acidic solution for approximately 13 hours.

3. Operating personnel fail to respond to sample analysis results from TK-G7.

The probability of all three of these events occurring simultaneously is very unlikely.

To ensure continuous and accurate pH monitor readings, a probe check will be performed once every four to eight hours, along with weekly probe calibrations. If the pH probe cannot be calibrated or the probe's reading and TK-G7 sample deviate significantly, the transfer will be terminated until the situation can be corrected.

Shutting down the TK-G7 to Tank Farms transfer will have no operational impacts for approximately five hours (based on 30 gpm flow and 6,000 gallons in TK-G7). Any delays beyond this will cause the neutralized PDD to overflow to canyon sumps and will require eventual shutdown of solvent extraction.

A fault tree analysis of the PDD to Tank Farms transfer system (Appendix B) determined that the probability of an acidic PDD being transferred to Tank Farms during the stabilization run to be 5×10^{-4} occurrences (assumed duration of six weeks).

3.2 TRANSFER LINE LEAK IN PUREX

A more probable accident would be a leak in the Sample Gallery header. If a major leak does occur, the transfer will be terminated. All spilled solutions will be cleaned up in accordance with appropriate procedures. The probability of a leak has been determined to be 1.0×10^{-3} occurrences during the stabilization run (assumed duration of six weeks, see Appendix B).

Drip pans will be located under all valves and fittings to contain any minor leaks. Any major leaks will drain to the canyon via the Sample Gallery drains.

Leaks in process piping located in the canyon cells are fully contained and require no special controls. Normal procedures for dealing with this type of event will be used.

3.3 SEISMIC EVENT

The only accident scenario which would result in an environmental release of PDD is a seismic event. Such an event could result in the failure of the encased underground transfer lines between PUREX and Tank Farms. Recovery from this accident would require the clean-up of the environmental spill per the appropriate procedures. The probability of a seismic event has been estimated to be 2.3×10^{-6} occurrences during the stabilization run (assumed duration of six weeks) (Appendix B).

4.0 SAFETY ISSUES

4.1 RADIATION

An analysis performed by Nuclear Safety and Radiological Analysis determined that the dose impact from the PDD transfer line in the Sample Gallery would be insignificant at 3.1×10^{-8} R/hr, at contact (Appendix C). The maximum monthly concentrations of the radionuclides listed in Table 4 were used to perform the dose assessment.

Impacts on-site and off-site are inconsequential from the installation of the transfer line in the Sample Gallery. No credible accident scenarios exist which could cause the radiation levels in the PDD to increase to levels where radiation effects would pose a problem.

4.2 CRITICALITY

Using the maximum monthly concentrations for plutonium and uranium in the PDD a concentration of 4.62×10^{-7} g/l would be seen in TK-G7 (Table 5). At this concentration a total of approximately 3.1 grams of plutonium and uranium-235 will be discharged to the underground storage tank during the stabilization run (well below the minimum critical mass of approximately 400 grams plutonium).

Additionally, the concentration of the fissionable isotopes in the PDD would have to be increased by a factor of 28,000 to approach TK-G7 and double-shell storage tanks the criticality limit of 0.013 g/l (Reference 9). There is no foreseeable occurrence which could significantly increase the plutonium concentration in the PDD stream. With this information in mind it can easily be concluded that the probability of a criticality during the transfer of PDD to Tank Farms is "incredible".

Table 5. Maximum Monthly Fissionable Material Content of Process Distillate Discharge

Isotope	Monthly Maximum* Concentration (uCi/ml)	Specific Activity (Ci/g)	Grams/Liter
^{238}Pu	2.18×10^{-7}	17.12	1.27×10^{-11}
$^{239240}Pu$	1.36×10^{-6}	6.2×10^{-2}**	2.18×10^{-8}
^{241}Pu	2.39×10^{-5}	1.03×10^{2}	2.32×10^{-11}
^{235}U	9.4×10^{-10}***	2.16×10^{-6}	4.4×10^{-7}
Total			4.62×10^{-7}

*Monthly maximum concentrations from C-018 Engineering Study (Reference 2)
**Activity assumed to be all ^{239}Pu for conservatism
***Percentage Curie content of Gross U assumed to be 4.2% based on Table 4-3 of Reference 6.

In accordance with Process Control Manual requirements, TK-G7 will be sampled once every 24 hours to confirm that the plutonium concentration is less than 0.013 g/l.

4.3 INDUSTRIAL SAFETY

4.3.1 Fire Hazards

No additional fire hazards are created by the use of the PDD to Tank Farms transfer system.

4.3.2 Chemical Hazards

Several chemical hazards exist with the use of the transfer system. The following addresses these hazards.

Sodium hydroxide and sodium nitrite will be added to the PDD. The standard precautions associated with the handling of these chemicals apply. Both of these chemicals are routinely used at the PUREX facility. Operating personnel have received training on the proper handling techniques for these chemicals.

In the event that the transfer line develops a leak in the Sample Gallery, personnel could be exposed to basic or acidic solutions. Catastrophic failure of the transfer system is highly unlikely and will not be addressed further. A more likely event would be the development of a small leak in the transfer piping in the Sample Gallery. The impact from such an event would be minimal. Clean-up would be performed in accordance with standard procedures.

If the pH adjustment system fails, acidic solutions could be pumped to Tank Farms. If this were to occur, higher than normal corrosion rates would be seen in the mild-steel transfer lines. The controls on the transfer system, both administrative and engineered barriers, are such that the probability of acidic solutions being transferred to Tank Farms is 5×10^{-4} occurrences during the stabilization run. The undetected failure of the pH adjustment system would require three simultaneous failures. These failures are: (1) the pH probe (2) the sodium hydroxide addition system, and (3) pH sampling of TK-G7.

To assure that incompatible chemicals are not added to the aqueous make-up tanks all incompatible chemicals (i.e., nitric acid) will be disconnected for the stabilization run.

4.4 CONSTRUCTION HAZARDS

Installation of this transfer system will place equipment in both the canyon cells and the Sample Gallery. The normal construction hazards associated with work in these areas exist. No additional or unusual hazards are foreseen at this time.

4.5 ENVIRONMENTAL RELEASES

Only one foreseeable accident scenario exists which could result in an environmental release. This accident would result from the catastrophic failure of the mild-steel transfer line. The only foreseeable event which would cause such a failure is a seismic event (probability of 2.3×10^{-6} occurrences during the six week stabilization run). Such an event would result in a dangerous waste being discharged directly to the environment/soil column. Prior to the stabilization run, PDD was typically discharged directly to the soil column. The PDD meets the environmental release limits for the discharge of radioactive solutions. However, the chemical adjustments required to meet the storage requirements will cause the PDD to be classified as a dangerous waste.

In the event that PDD is accidently discharged within the PUREX facility no environmental release would result. All leaks would be transferred to canyon tankage, thus preventing any discharge. Any airborne releases within PUREX will pass through a minimum of one stage of HEPA filtration prior to being discharged to the environment.

5.0 SYSTEM CLASSIFICATION

This section will address the hazards classification, impact level, and safety classification of the PDD to Tank Farms continuous transfer system.

5.1 IMPACT LEVEL

Based on the accident evaluation and Reference 5, the impact level of this system has been deemed Level 2. This level has been assigned as a result of the seismic event accident scenario. Failure of any of the control systems will not be sufficient to cause an environmental release. Therefore, all the equipment used for the transfer system, with the exception of the Tank Farm transfer lines, will be designated Impact Level 3 or 4 (Table 6).

Table 6. Impact Level/Safety Class Designation of Process Equipment

Equipment Type	Impact Level	Safety Class
Sample Gallery Piping	3	3
Canyon Piping	3	4
Transfer Pumps	3	4
pH Instrumentation	3	3
KOH Addition System	3	3
Tank Farm Transfer Lines	2	2
Tank G7 Sampling	3	3

5.2 SAFETY CLASSIFICATION

The safety classification of the PDD to Tank Farms system and its components have been determined in accordance with Reference 5. The overall safety classification of the transfer system is Level 2. The safety classification of the individual pieces of equipment used for the PDD are listed in Table 6.

5.3 HAZARDS CLASSIFICATION

As documented in the Final Safety Analysis Report (Reference 6), the hazards classification of the PUREX facility is "moderate". The hazard classification

of the PDD to Tank Farms continuous transfer system has been determined to be "low" per the requirements of Reference 7.

6.0 PROCESS CONTROL MANUAL REQUIREMENTS

Several safety and process control limits are outlined in the Process Control Manual (Reference 8) for PDD discharges and TK-G7. All of the Operational Safety Requirements identified in the PUREX Final Safety Analysis Report (Reference 6) are implemented through the Process Control Manual. This section addresses the controls and limits of the Process Control Manual.

6.1 TANK G7 PLUTONIUM CONCENTRATION LIMITING CONDITION OF OPERATION (Reference 8, Addendum I, Section 2.6.6.b)

6.1.1 Requirement

To preclude gross quantities of plutonium from entering the Ammonia Scrubber Feed (ASF) stream and being transferred to Tank Farms from TK-G7, the following shall be performed during operation:

- Before starting a dissolution step in a given dissolver, confirm that the downdraft tower diversion valve is in the "dissolver" position by operating the tower spray and observing a weight factor increase in the dissolver. Also, turn-off the appropriate ammonia scrubber catch tank jet controller before starting a dissolution step

- Sample TK-G7 each batch or once in each 24 hour period during continuous transfer and verify the plutonium content is less than 0.013 g/l (Reference 8, Addendum I, Section 15.2.7).

6.1.2 Discussion

This requirement is used to ensure that abnormally high plutonium concentrations, from the ASF stream, are not seen in TK-G7. The plutonium concentrations of the PDD are very low (typically $<2.19 \times 10^{-8}$ g/l, see Table 7), and should not exceed the specified limit of 0.013 g/l. The ASF and PDD streams will not be mixed during the stabilization run. The requirements of this LCO will not be modified in any way. Tank G7 will be sampled for plutonium on a daily basis when PDD or ASF is being discharged to ensure that this requirement is met.

Table 7. Plutonium Concentration of Process Distillate Discharge

Isotope	Monthly Maximum Concentration (uCi/ml)	Activity (Ci/g)	Concentration (g/l)
^{238}Pu	2.18×10^{-7}	17.12	1.27×10^{-11}
$^{239,240}Pu$	1.36×10^{-6}	6.2×10^{-2}*	2.19×10^{-8}
^{241}Pu	2.39×10^{-6}	1.03×10^{2}	2.32×10^{-11}
Total			2.19×10^{-8}

*Assumed all Pu-239 for conservatism.
Maximum monthly concentrations are from Reference 2

9447219.1557

6.2 TANK G7 TEMPERATURE LIMITING CONDITION OF OPERATION
(Reference 8, Addendum 1, Section 2.6.6.a)

6.2.1 Requirement

The solution temperature of ASF in TK-G7 shall be maintained less than 35°C during continuous transfer to underground storage. Increase cooling water flow as required or stop the transfer.

6.2.2 Discussion

As stated in the requirement, the solution temperature LCO applies to ASF transfers and not PDD. Stabilization run operating plans do not involve the operation of both solvent extraction and head-end at the same time. This operating scheme will prevent any mixing of PDD and ASF solutions, thereby eliminating the chance that sufficient quantities of ammonia are added to TK-G7. The PDD does not contain ammonia at sufficient concentrations (average concentration of 110 ppb) to create an explosion hazard, therefore, the limit is not applicable for this system.

6.3 AMMONIA SCRUBBER FEED NEUTRALIZATION IN TANK G7 LIMITING CONTROL SETTING
Reference 8, Addendum I, Section 2.6.5)

6.3.1 Requirements

During the reaction of ASF with sodium hydroxide in TK-G7, live steam shall be bled into the tank vapor space at a rate not less than 115 lb/hour. If the steam bleed fails, perform an orderly shut down of the continuous transfer to underground storage. Increase the TK-G7 solution temperature to above 45°C at a rate of 4°C/15 minutes.

6.3.2 Discussion

As stated in the requirement, the steam bleed applies to ASF transfers and not to PDD. The requirement is intended to keep the water vapor content elevated to ensure that explosive mixtures of ammonia gas do not collect in the tank head space. The PDD does not contain ammonia at sufficient concentrations to form explosive mixtures, therefore, the limit does not apply to PDD transfers through TK-G7.

9413219.1558

6.4 CHEMICAL ADJUSTMENT LIMITING CONTROL SETTING
(Reference 8, Addendum I, Section 8.6.1)

6.4.1 Requirement

Solutions (excluding water flushes) discharged directly to mild-steel storage tanks or through mild-steel lines shall be adjusted for pH and chemical composition to meet tank limits as specified in Reference 1 (Reference 8, Addendum I, Section 15.8.1).

6.4.2 Discussion

This requirement applies to PDD transfers to Tank Farms. A pH control system will be installed with the new routing to ensure that Tank Farm requirements (Reference 1 and Table 1) are met. A more detailed discussion of this control system is in Section 2.0 of this document.

6.5 MAXIMUM TRANSFER TEMPERATURE LIMITING CONTROL SETTING
(Reference 8, Addendum I, Section 8.6.2)

6.5.1 Requirement

Underground transfer lines 4001, 4002, 4003, 4004, 4023, or 4028 shall not be subjected to an average temperature exceeding 60°C (140°F).

6.5.2 Discussion

Excessive heating of the 4000 series underground transfer lines by contact with the low pressure, superheated steam remaining from the 90 lb/in^2 stream supplied to operate the transfer jets subjects the lines to undue stress and could result in line failure. (One instance of line failure was attributed to this phenomenon). The transfer line from TK-G7 to the AP Tank Farm is a 4000 series line (specifically 4004), therefore, this requirement applies. The temperature of the PDD exiting the K4 Sample Pot is controlled less than 50C, well below the $60^{o}C$ limit. Additionally, transfers from TK-G7 are pumped instead of jetted; preventing temperature elevation from jet operation.

6.6 DISCHARGES TO CRIB PH LIMITING CONDITION OF OPERATION (Reference 8, Addendum I, Section 13.6.6)

6.6.1 Requirement

The pH of the PDD stream when routed to the 216-A-45 crib shall be maintained between 2.5 and 12.0 as measured by the record pH probe (NR-W40-15-2) located beyond final neutralization treatment.

An upstream pH probe (295-AB NR-W40-13-1) shall be used to control the addition of sodium hydroxide to the K4 Sample Pot to maintain the pH within the above control limits at the point of discharge. If the pH at the 296-AB probe drops below 2.5 or exceeds 12.0, appropriate corrective action will be taken using Procedure PO-180-070.

6.6.2 Discussion

The above requirement is to ensure that the environmental release limits for pH are not violated. Since the PDD will not be discharged to the crib during the stabilization run this requirement does not apply. The pH of the PDD will be controlled at the limits specified for waste transfers to Tank Farms (Table 1).

6.7 PROCESS DISTILLATE DISCHARGE PH PROBE OPERABILITY LIMITING CONDITION OF OPERATION (Reference 8, Addendum I, Section 13.6.9)

6.7.1 Requirement

The pH monitors for the process condensate and chemical sewer streams shall be operating at all times during flow to the 216-A-45 crib and 216-B-2 pond, respectively, with the exception that malfunctions which occur during operation shall be corrected within 72 hours. In the event that both PDD pH probes fail, at least one of them must be repaired within 24 hours. If pH monitors cannot be repaired within the specified time frames, the PUREX Plant Manager, with the concurrence of Environmental Protection and PUREX Nuclear

9413219.1559

Safety, shall determine and document what alternate action will be taken. The pH monitors for the process condensate stream shall be operational prior to start-up of J8 and K4 concentrators or flow being sent to the PDD header, without exception.

6.7.2 Discussion

This requirement ensures that continuous pH monitoring of PDD discharges to the crib are in place. Since PDD will not be discharged to the crib for the stabilization run, this limit does not apply. The pH of the PDD will be controlled at the levels required by Tank Farms. To ensure proper pH control, a pH probe will be installed on the K4 to G7 transfer route, and pH samples will be taken from TK-G7.

9413219.1560

6.8 ADMINISTRATIVE CONTROL SYSTEMS
(Reference 8, Addendum 1, Section 14)

This chapter of the Process Control Manual sets the administrative requirements for all systems within the PUREX facility. The PDD to Tank Farms transfer system will adhere to this requirement in every way.

6.9 NEW PROCESS DISTILLATE DISCHARGE pH LIMITING CONTROL SETTING

To ensure that adequate pH control is maintained, for the continuous transfer of PDD to Tank Farms during the stabilization run, the following LCS will be added to Addendum I, Section 8.6.1 of the Process Control Manual (Reference 8). This requirement reflects the responses outlined in Section 2.0 of this document.

For the transfer of the PDD stream to underground storage, the pH shall be routinely greater than 12.0, as measured by sample analysis of TK-G7. If the sample analysis has a pH less than 12.0, add caustic to TK-G7 and resample. If TK-G7 sample analysis is ever less than 11.0, the transfer to underground storage shall be immediately stopped. The transfer shall not be restarted until the pH in TK-G7 is confirmed to be greater than 12.0.

7.0 CONCLUSIONS

Based on the above discussions, the proposed system to continuously discharge PDD to Tank Farms poses no significant risks to the public, personnel or the environment.

To ensure that the continuous and safe operation of the PDD to Tank Farms transfer system, the requirements outlined in this safety evaluation must be incorporated into the applicable operating documents. A summary of the requirements identified in this document is provided in Appendix D.

8.0 REFERENCES

1. OSD-T-151-00007, 241-AN-AP-AW-AY-AZ and -SY Tank Farms, Westinghouse Hanford Company, Richland, Washington

2. SD-C018-ES-001, Rev. 0, PUREX Condensate Effluent Treatment Facility Engineering Study, Westinghouse Hanford Company, Richland, Washington, October 1988

3. PFD-P-020-00001, Rev. 7, PUREX Flowsheet, Rockwell Hanford Operations, Richland, Washington, September 1985

4. Engineering Drawings: H-2-90276
   H-2-90393
   H-2-65123
   H-2-90370
   H-2-64538
   H-2-38769, Shts 1-3

5. WHC-CM-1-3, Management Requirements and Procedures, MRP 5.43, "Impact Levels," and MRP 5.46, "Safety Classification of Systems, Components, and Structures," Westinghouse Hanford Company, Richland, Washington

6. SD-HS-SAR-001, Rev. 5, PUREX Final Safety Analysis Report, Rockwell Hanford Operations, Richland, Washington

7. WHC-CM-4-46, Non-Reactor Facility Safety Analysis Manual, Westinghouse Hanford Company, Richland, Washington

8. WHC-CM-5-24, June 28, 1989, PUREX Process Control Manual, Westinghouse Hanford Company, Richland, Washington

9. CPS-P-465-40000, Rev. G1, PUREX Uranium Plutonium Separations Criticality Specification, Rockwell Hanford Operations, Richland, Washington

10. WHC-EP-0287, Waste Stream Characterization Report, Vol. 2, Westinghouse Hanford Company, Richland, Washington, August 1989

9413219.1569

9413219.1562

APPENDIX A

pH CONTROL RESPONSE CALCULATIONS

Westinghouse Hanford Company

ANALYSIS

PAGE 1
JOB NO.
DATE 9/28/89
BY D.W. Bergmann
CHECKED BY M.W. Bowman

FOR PDD to Tank Farms Transfer Safety Evaluation
LOCATION
SUBJECT Process Response Time Calculations

Problem: Determine the rate of pH change in TK-67 during process upsets.

Process Data:
- PDD flow to TK-67 is 30 gpm
- Min. Volume in TK-67 is 3000 gal
- Maximum Volume in TK-67 is 15000 gal
- Flow to Tank Farms is 30 gpm
- Maximum Volume of K4 sample pot is 120 gal
- Avg Volume of K4 sample pot is 30 gal

Equation Development

F = Feed rate (gpm)
C_F = Feed Concentration (M)
V = Tank Volume
C_o = Initial Concentration
C = Concentration at time t

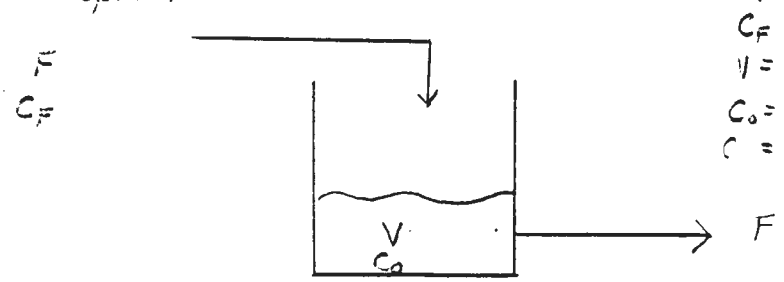

In out - Out out = Accumulation

$$FC_F - FC = V\frac{dc}{dt}$$

$$C_F - C = \frac{V}{F}\frac{dc}{dt}$$

$$\int_0^t dt = \frac{V}{F}\int_{C_o}^{C}\frac{dc}{C_F - C}$$

$$t = \frac{V}{F}\ln\left(\frac{C_F - C_o}{C_F - C}\right)$$

54-7400-276 (10-87)

Westinghouse Hanford Company

ANALYSIS

PAGE 2
JOB NO.
DATE 9/28/89
BY D.W. Bergmann
CHECKED BY M.W. Bowman

FOR PDD to Tank Farms Safety Evaluation
LOCATION
SUBJECT Process Response Time Calculations

To account for an acidic solution being added to a basic solution all hydrogen ion concentrations will be considered to be negative hydroxide ion concentrations. This is based on the following reaction assuming 100% reaction:

$$H^+ + OH^- \rightarrow H_2O$$

After performing the appropriate substitutions the following equation results:

$$t = \frac{V}{F} \ln\left(\frac{[OH]_0 + [H]_F}{[OH]_t + [H]_F}\right)$$

where: t = time
V = volume of tank
F = feed rate
$[OH]_0$ = initial hydroxide concentration in tank
$[OH]_t$ = hydroxide concentration at time t.
$[H]_F$ = hydrogen concentration in feed.

9413219.1564

Westinghouse Hanford Company

ANALYSIS

PAGE 3
JOB NO.
DATE 9/28/89
BY D.W. Bergmann DWB
CHECKED BY M.W. Bowman

FOR PDD to Tank Farms Transfer Safety Evaluation
LOCATION
SUBJECT Process Response Time Calculations

9413219.1565

The pH in TK-67 will drop to a value of 10.0 (Safety Alarm set point) in:

Initial Conditions:

$[OH]_o = .01 M$ (pH = 12.0)
$[OH]_+ = .0001 M$ (pH = 10.0)
$[H^+]_F = .0001 M$ (pH = 4)
$F = 30 gpm$

V = 6000 gal

$$t = \frac{6000 gal}{30 gpm} \ln\left(\frac{.01 + .0001}{.0001 + .0001}\right) = 784 min = 13.1 hrs$$

V = 3000 gal

$$t = \frac{3000}{30} \ln\left(\frac{.01 + .0001}{.0001 + .0001}\right) = 392 min = \underline{6.5 hrs.}$$

The pH in the K4 sample pot will drop to a value of 10.0 (Safety Alarm set point) in:

$[OH]_o = .01 M$ (pH = 12.0)
$[H^+]_F = .0001 M$ (pH = 4)
$[OH]_+ = .0001 M$ pH = 10.0
$F = 30 gpm$

V = 80 gal

$$t = \frac{80 gal}{30 gpm} \ln\left(\frac{.01 + .0001}{.0001 + .0001}\right) = 10.5 min.$$

54-7400-276 (10-87)

Westinghouse Hanford Company

ANALYSIS

PAGE 4
JOB NO.
DATE 9/28/89
BY D.W. Bergmann DWB
CHECKED BY M.W. Bergmann

FOR PDD to Tank Farms Safety Evaluation
LOCATION
SUBJECT Process Response Time Calculations

The pH in the K4 sample pot will drop to 5.0 (required level for characterization sampling) in:

Initial conditions:

$[OH^-]_o = .01\ M$ (pH=12.0)

$[OH^-]_f = 1\times10^{-9}\ M$ (pH=5.0)

$[H^+]_F = .0001\ M$ (pH=4.0)

$F = 30\ gpm$

$V = 80\ gal$

$$t = \frac{80\ gal}{30\ gpm} \ln\left(\frac{.01 + .0001}{1\times10^{-9} + .0001}\right)$$

$$t = 12.3\ min$$

9413219.1566

9413219.1567

APPENDIX B

FAULT TREE ANALYSIS

PROBABALISTIC ASSESSMENT

For the purposes of this analysis, three scenarios were considered: (1) a transfer of untreated Process Distillate Discharge (PDD) to Tank Farms, (2) a leak of PDD within PUREX from causes other than a seismic event, and (3) a seismic event. Because of the necessity to examine the control scheme to avoid a transfer of untreated PDD to Tank Farms, the probabilistic analysis employed a fault tree model. The other two scenarios were simply estimated based on derived failure rates and the anticipated likelihood of their occurrence during the six-week stabilization campaign. All probabilistic calculations are single point estimates, with no uncertainty analyses performed.

The transfer of acidic PDD is based on several assumptions:

1. The length of the stabilization campaign will be six weeks.

2. Characterization samples, which will require shutting down the caustic addition stream, will be performed weekly.

3. pH record sampling will be performed every four hours. With at least every other record sample, a qualitative test to assure that the pH probe is not grossly out of calibration will be performed. Sample results will be compared with the pH readings.

4. The pH probe will be calibrated at least weekly.

5. During characterization sampling, the discharge of PDD will be interrupted. Discharge of PDD will not be resumed until after caustic addition is restarted.

6. Tank 153 level will be checked every shift, with caustic additive (sodium hydroxide and sodium nitrite) added at a level above the low-level alarm point.

7. All operations will be performed using written procedures by trained, certified operators.

8. The pH alarms will be verified operable during the characterization sampling.

9. The caustic spike added to TK-G7 during characterization sampling will be of sufficient quantity to treat the entire amount of PDD that would be discharged during the time the sample is being taken. This means that failure to stop discharging from TK-G7 before beginning the characterization sampling procedure would not result in an untreated discharge unless the caustic spike was not performed.

10. The probability of plugged additive transfer lines during the six-week campaign is negligible.

Based on these assumptions and the process description in the body of this document, the Fault Tree shown as Figure A-1 was developed. The equations used to calculate the probabilities of intermediate events and the failure rates used to calculate the probabilities of basic events are included as Table A-1.

9413219.1568

Component failure rate data was derived from report DPST-CFRP-80-113, "Component Failure-Rate Data with Potential Applicability of the Hot Experimental Facility", while human error rates were taken from NUREG/CR-1278, "Handbook of Human Reliability Analysis with Emphasis on Nuclear Power Plant Applications". The calculated probability of occurrence of the top event, Acidic Discharge to Tank Farms, was 5×10^{-4}. This event would be characterized as highly unlikely, given the controls included in the model.

The probability of a leak during the six-week time frame can be roughly derived by assuming an overall failure rate for the transfer piping of about 10^{-6}/hour. Individual component and piping failure rates are about an order of magnitude lower than this figure, so it was assumed to be conservative. Multiplying this by the number of hours in six weeks, the probability of a leak during the stabilization run is about 1×10^{-3}, or "unlikely." The fact that the bulk of the transfer piping is new and will satisfactorily pass a system leak test makes this estimate even more conservative.

Because no seismic criteria was used in the design of the piping, the probability of the Hanford Design Basis Earthquake was used to determine the probability of a seismic event (piping assumed to fail). The probability of the Design Basis Earthquake is 2×10^{-5}/year; the probability in six weeks is 2.3×10^{-6}. The failure of the piping and equipment due to an earthquake is thus considered unlikely.

9413219.169

REFERENCES

1. A. H. Dexter, December 1980, Component Failure-Rate Data with Potential Applicability to the Hot Experimental Facility, DPST-CFRP-80-113, E. I. du Pont de Nemours & Co., Savannah River Laboratory, Aiken, South Carolina

2. A. D. Swain and H. E. Guttmann, August 1983, Handbook of Human Reliability Analysis with Emphasis on Nuclear Power Plant Applications, NUREG/CR-1278, SAND80-0200, Sandia National Laboratories, Albuquerque, New Mexico

3. HPS-SDC-4.1, Rev. 1, Standard Architectural-Civil Design Criteria Design Loads for Facilities, Westinghouse Hanford Company, Richland, Washington (Draft)

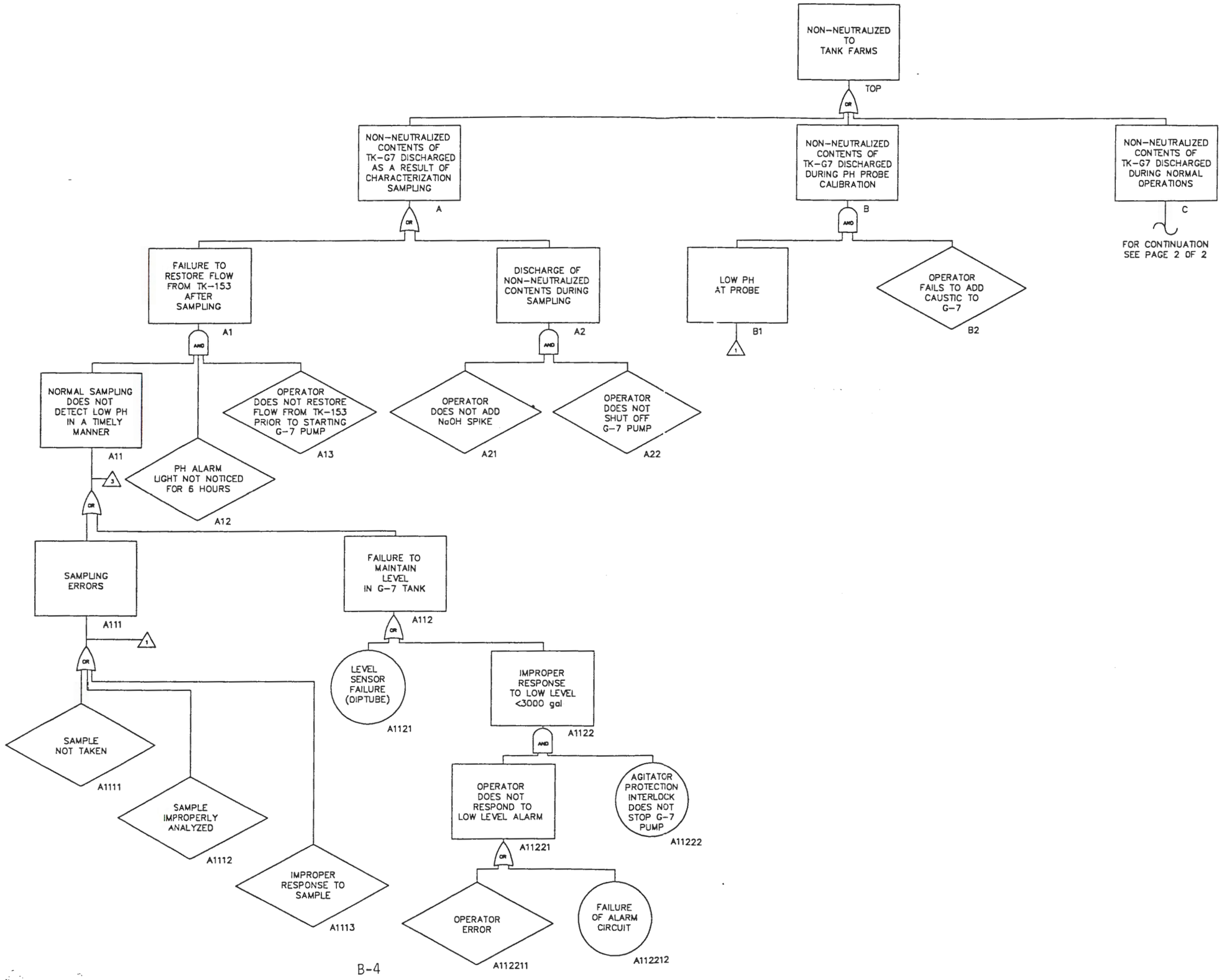
NON-NEUTRALIZED TO TANK FARMS
TOP
NON-NEUTRALIZED CONTENTS OF TK-G7 DISCHARGED AS A RESULT OF CHARACTERIZATION SAMPLING
A
NON-NEUTRALIZED CONTENTS OF TK-G7 DISCHARGED DURING PH PROBE CALIBRATION
B
NON-NEUTRALIZED CONTENTS OF TK-G7 DISCHARGED DURING NORMAL OPERATIONS
C
FOR CONTINUATION SEE PAGE 2 OF 2
FAILURE TO RESTORE FLOW FROM TK-153 AFTER SAMPLING
A1
DISCHARGE OF NON-NEUTRALIZED CONTENTS DURING SAMPLING
A2
LOW PH AT PROBE
B1
OPERATOR FAILS TO ADD CAUSTIC TO G-7
B2
NORMAL SAMPLING DOES NOT DETECT LOW PH IN A TIMELY MANNER
A11
OPERATOR DOES NOT RESTORE FLOW FROM TK-153 PRIOR TO STARTING G-7 PUMP
A13
OPERATOR DOES NOT ADD NaOH SPIKE
A21
OPERATOR DOES NOT SHUT OFF G-7 PUMP
A22
PH ALARM LIGHT NOT NOTICED FOR 6 HOURS
A12
SAMPLING ERRORS
A111
FAILURE TO MAINTAIN LEVEL IN G-7 TANK
A112
LEVEL SENSOR FAILURE (DIPTUBE)
A1121
IMPROPER RESPONSE TO LOW LEVEL <3000 gal
A1122
SAMPLE NOT TAKEN
A1111
SAMPLE IMPROPERLY ANALYZED
A1112
IMPROPER RESPONSE TO SAMPLE
A1113
OPERATOR DOES NOT RESPOND TO LOW LEVEL ALARM
A11221
AGITATOR PROTECTION INTERLOCK DOES NOT STOP G-7 PUMP
A11222
OPERATOR ERROR
A112211
FAILURE OF ALARM CIRCUIT
A112212

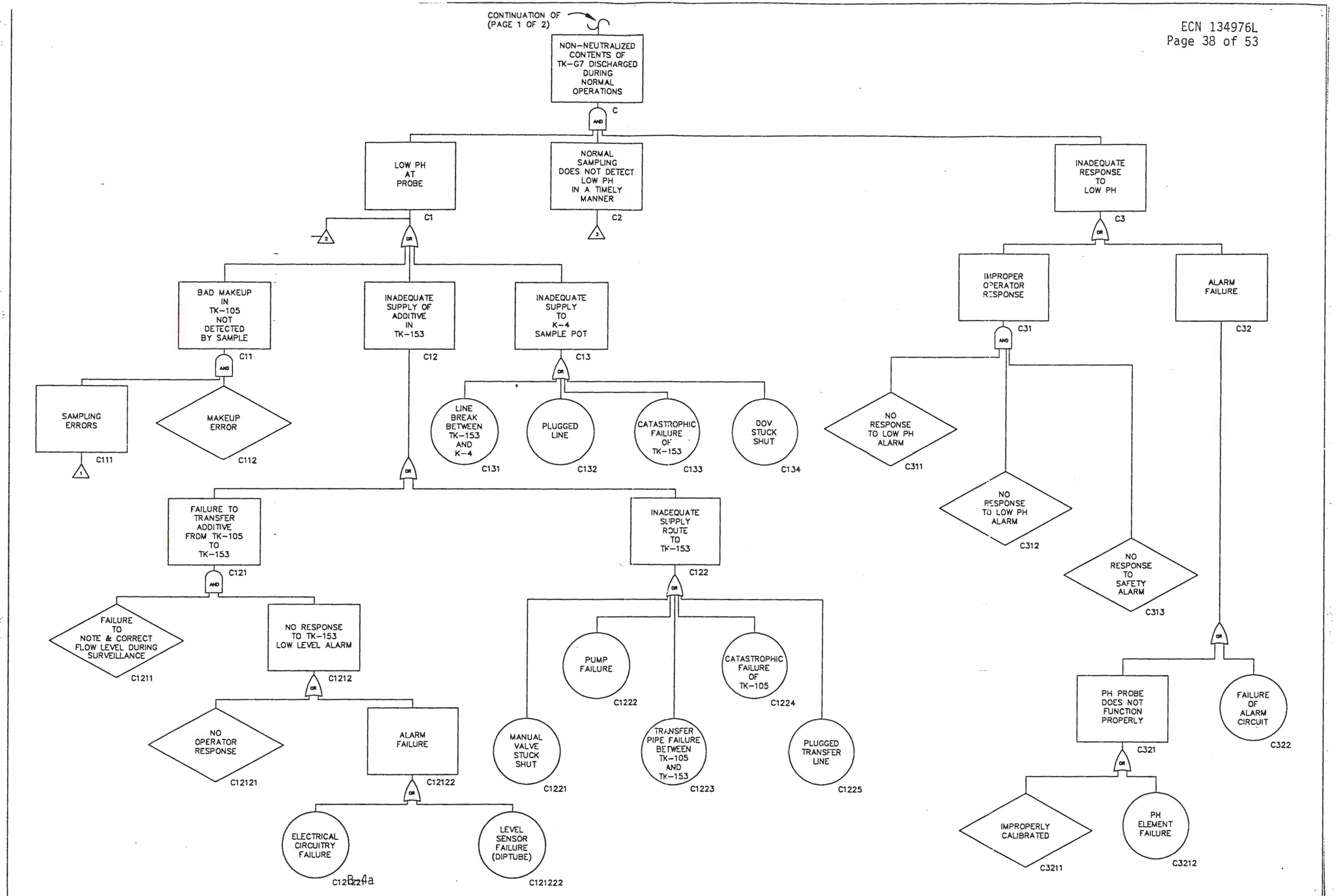
CONTINUATION OF (PAGE 1 OF 2)
NON-NEUTRALIZED CONTENTS OF TK-G7 DISCHARGED DURING NORMAL OPERATIONS
C
AND
LOW PH AT PROBE
C1
NORMAL SAMPLING DOES NOT DETECT LOW PH IN A TIMELY MANNER
C2
INADEQUATE RESPONSE TO LOW PH
C3
OR
BAD MAKEUP IN TK-105 NOT DETECTED BY SAMPLE
C11
INADEQUATE SUPPLY OF ADDITIVE IN TK-153
C12
INADEQUATE SUPPLY TO K-4 SAMPLE POT
C13
SAMPLING ERRORS
C111
MAKEUP ERROR
C112
LINE BREAK BETWEEN TK-153 AND K-4
C131
PLUGGED LINE
C132
CATASTROPHIC FAILURE OF TK-153
C133
DOV STUCK SHUT
C134
FAILURE TO TRANSFER ADDITIVE FROM TK-105 TO TK-153
C121
INADEQUATE SUPPLY ROUTE TO TK-153
C122
FAILURE TO NOTE & CORRECT FLOW LEVEL DURING SURVEILLANCE
C1211
NO RESPONSE TO TK-153 LOW LEVEL ALARM
C1212
NO OPERATOR RESPONSE
C12121
ALARM FAILURE
C12122
ELECTRICAL CIRCUITRY FAILURE
C12122
LEVEL SENSOR FAILURE (DIPTUBE)
C121222
MANUAL VALVE STUCK SHUT
C1221
PUMP FAILURE
C1222
TRANSFER PIPE FAILURE BETWEEN TK-105 AND TK-153
C1223
CATASTROPHIC FAILURE OF TK-105
C1224
PLUGGED TRANSFER LINE
C1225
IMPROPER OPERATOR RESPONSE
C31
ALARM FAILURE
C32
NO RESPONSE TO LOW PH ALARM
C311
NO RESPONSE TO LOW PH ALARM
C312
NO RESPONSE TO SAFETY ALARM
C313
PH PROBE DOES NOT FUNCTION PROPERLY
C321
FAILURE OF ALARM CIRCUIT
C322
IMPROPERLY CALIBRATED
C3211
PH ELEMENT FAILURE
C3212
1
2
3

Event Address	Event Description	Calculated Probability	Comments
Top	Acidic Discharge to Tank Farms	$P(A) + P(B) + P(C)$ $2.2\times10^{-4} + 6.1\times10^{-6} + 2.7\times10^{-4} \cong 5\times10^{-4}$	
A	Non-neutralized contents of TK-G7 discharged as a result of characterization sampling	$6 \cdot [P(A\ 1) + P(A\ 2)] =$ $6\ (3.8\times10^{-5}) \cong 2.2\times10^{-4}$	Special sampling performed six times
A 1	Failure to restore flow from TK-153 after sampling	$P(A\ 11) \cdot P(A\ 12) \cdot P(A\ 13) =$ $(1.0\times10^{-2})(.95)(.003) \cong 2.8\times10^{-5}$	
A 2	Discharge of non-neutralized TK-G7 during characterization sampling	$P(A\ 21) \cdot P(A\ 22) =$ $(.003) \cdot (.003) = 9\times10^{-6}$	
A 11	Normal sampling does not detect low pH in a timely manner	$Pc = (.009) + (.19) \cong .2$ $P\ (A\ 111) + P(A\ 112) =$ $(.009) + 1.7\times10^{-3} = 1.07\times10^{-2}$	
A 12	pH alarm light not noticed for six hours	$P(A\ 12) = .95$	
A 13	Operator does not restore flow from TK-153 prior to starting G7 pump	$P(A\ 13) = .003$	Table 20-7, Reference 2, Basic human error rate
A 21	Operator does not add sodium hydroxide spike	$P(A\ 21) = .003$	Table 20-7, Reference 2, Basic human error rate
A 22	Operator does not shut off G7 pump	$P(A\ 22) = .003$	Table 20-7, Reference 2, Basic human error rate

Event Address	Event Description	Calculated Probability	Comments
A 111	Sampling errors	Pc = .009 P(A 111) = P(A 1111) + P(A 1112) + P(A 1113) (.003) + (.003) + (.003) = (.009)	
A 112	Failure to maintain level in G7 tank	Pc = 0.19 + ($6x10^{-3}$) = 0.19 P(A 112) = P(A 1121) + P(A 1122) = $1.7x10^{-3}$ + = $1.7x10^{-3}$	
A 1111	pH sample not taken	P = .003	Table 20-7, Reference 2, Basic human error rate
A 1112	pH sample not correctly analyzed	P = .003	Table 20-7, Reference 2, Basic human error rate
A 1113	Improper response to sample results	P = .003	Table 20-7, Reference 2, Basic human error rate
A 1121	Level sensor failure (dip tube)	$P \cong \lambda t = (2.1x10^{-4})(8) = 1.68x10^{-3}$ $Pc = [1-\exp\{^{-}(2.1x10^{-4})(24)(42)\}] = .19$	λ from Reference 1, p. 20 Assume t = 8 hours; t = 6(24)(7) for c
A 1122	Improper response to low-level (<2,800 gallons)	$Pc = (3.0x10^{-3}) \cdot (2.0x10^{-3}) = 6.0x10^{-6}$ P = P(A 11221) x P(A 11222) = $(3.0x10^{-3})(1.6x10^{-5}$ = Ë	
A 11221	Operator does not respond to low-level alarm	P = P(A 112211) + P(A 112212) = $3.0x10^{-3}$	

Event Address	Event Description	Calculated Probability	Comments
A 11222	Pump protection interlock does not stop G7 pump	$P \cong \lambda t = (2.0\times10^{-6})(8) = 1.6\times10^{-5}$ $Pc = (2.0\times10^{-6})(42)(24) = 2.0\times10^{-3}$	λ from Reference 1, p. 23 Assume t = 8 hours
A 112211	Operator error	P = .003	Table 20-7, Reference 2, Basic human error rate
A 112212	Failure of alarm circuit	$P \cong \lambda t = (1.2\times10^{-5})(8) = 9.6\times10^{-5}$ $Pc = (1.2\times10^{-5})(42)(24) = 1.2\times10^{-2}$	λ from Reference 1, p. 16 Assume t = 8 hours
B	Non-neutralized contents of TK-G7 discharged during pH probe calibration	$6\ [P(B1) \cdot P(B2)]$ $6\ [(3.4\times10^{-4})(.003)] = 6.1\times10^{-6}$	Assume calibrating six times
B 1	Low pH at probe	See calculation of C; assume "exposure time" = 4 hours; $P = 3.4\times10^{-4}$	
B 2	Operator fails to add caustic to G7	P = .003	Table 20-7, Reference 2, Basic human error rate
C	Non-neutralized contents of TK-G7 discharged during normal operations	$P(C) = P(C\ 1) \cdot P(C\ 2) \cdot P(C\ 3) = \mathcal{E}$ $(6.4\times10^{-2})(.2)(.021) = 2.7\times10^{-4}$	
C 1	Low pH at probe	$P_b = (2.7\times10^{-5}) + (2.2\times10^{-4}) + (9.4\times10^{-5})$ $= 3.4\times10^{-4}$ $P(C\ 1) = p(C\ 11) + P(C\ 12) + P(C\ 13)$ $= 4.3\times10^{-4} + 3.7\times10^{-2} + 2.4\times10^{-2}$ $= 6.1\times10^{-2}$	

Event Address	Event Description	Calculated Probability	Comments
C 2	pH sampling does not detect low pH in a timely manner	See calculation of P(A 11) P(C 2) = .02	Exposure time assumed to be length of campaign
C 3	Inadequate response to low pH	P(C 3) = P(C 31) + P(C 32) = = 7.5×10^{-4} + .021 = .021	
C 11	Bad make-up in TK-105 not detected by sample	P_b = (.009) · (.003) = 2.7×10^{-5} P(C 11) = P(C 111) · P(C 112) = (.036) · (.012) = 4.3×10^{-4}	
C 12	Inadequate supply of additive in TK-153	$P_b = 2.3 \times 10^{-5} + 2.0 \times 10^{-4} = 2.2 \times 10^{-4}$ P(C 12) = P(C 121) + P(C 122) = $(1.1 \times 10^{-3}) + (3.6 \times 10^{-3}) = 3.7 \times 10^{-2}$	
C 13	Inadequate supply to K4 Sample Pot	$P_b = 8.0 \times 10^{-7} + 0 + 8 \times 10^{-7} + 9.2 \times 10^{-5}$ $= 9.4 \times 10^{-5}$ P(C 13) = P(C 131) + P(C 132) + P(C 133) + P(C 134) = 2.0×10^{-4} + 0 + 2.3×10^{-2} + 8.4x101-^{4} = 2.4×10^{-2}	
C 31	Improper operator response	P(C 31) = P(C 311) · P(C 312) · P(C 313) = (.003)(.5)(.5) = 7.5×10^{-4}	
C 32	Alarm Failure	P(C 32) = P(C 321) + P(C 322) = ε (.020) + (.001) = .021	
C 111	Sampling errors	For B1 demand, (.009) probability with four demands = 4 (PA 111) = 4 (.009) = .036	

Event Address	Event Description	Calculated Probability	Comments
C 112	Make-up error	B6, one demand and $P_b = .003$ $P(C\ 112) = 4(.003) = .012$	Table 20-7, Reference 2 Assume four demands
C 121	Failure to transfer additive from TK-105 to TK-153	$P_b = (.006) \cdot 3.9\times10^{-3} = 2.3\times10^{-5}$ $P(C\ 121) = P(C\ 1211) \cdot P(C\ 1212) = (.006)(.19) = 1.1\times10^{-3}$	
C 122	Inadequate supply route to TK-153	$P_b = 2.0\times10^{-4}$ $P(C\ 122) = P(C\ 1221) + P(C\ 1222) + P(C\ 1223) + P(C\ 1224) + P(C\ 1225) = 3.6\times10^{-2}$	
C 131	Line break between TK-153 and K4	$P_b = \lambda t = (2.0\times10^{-7})(4) = 8.0\times10^{-7}$ $P(C\ 131) = t = (2.0\times10^{-7}) \times 2.4 \times 42 = 2.0\times10^{-4}$	λ from Reference 1, p. 27, $t = (24)(42)$
C 132	Plugged line	Assumed zero -- new line	
C 133	Catastrophic failure of TK-153	$P_b = \lambda t = (2.0\times10^{-7}(4) = 8.0\times10^{-7}$ $P(C\ 133) = t = (2.0\times10^{-3})(1008) = 2.0\times10^{-4}$	λ from Reference 1, p. 38, $t = 1008$
C 134	DOV stuck shut	$P_b = \lambda t = (2.3\times10^{-5})(4) = 9.2\times10^{-5}$ $P(C\ 134) = t = (2.3\times10^{-5})(1008) = 2.3\times10^{-2}$	λ from Reference 1, p. 36, $t = 1008$
C 311	No response to low pH alarm	$P = .003$	Table 20-7, Reference 2, Basic human error rate

Event Address	Event Description	Calculated Probability	Comments
C 312	No response to low-low pH alarm	P = .003	Table 20-7, Reference 2, Basic human error rate
C 313	No response to safety alarm	P = 0.5	Table 20-7, Reference 2 Basic human error rate
C 321	pH probe does not function properly	P(C 321) = P(C 3211) + P(C 3212) = .018 + .0026 = .020	
C 322	Failure of alarm circuit	$P(C\ 322) = \frac{t}{2} = 1.2\times10^{-5}\ ((7\times24)/2) = \varepsilon$ 1.0×10^{-3}	
C 1211	Failure to note and correct low level during surveillance	$P_b = .006$ P(C 1211) = .006	Table 20-10, Reference 2
C 1212	No response to TK-153 low-level alarm	$P_b \cong .003 + 8.7\times10^{-4} = 3.9\times10^{-3}$ P(C 1212) = P(C 12121) + P(C 12122) = $.003 + .19 \cong .19$	
C 1221	Manual valve stuck shut	$P_b = (1.5 \times 10^{-5})4 = 6.0\times10^{-5}$ $P(C\ 1221) = \lambda t = (1.5\times10^{-5})(1008) = 1.5\times10^{-3}$	λ from Reference 1, p. 37
C 1222	Pump failure	$P_b = 3.4\times10^{-5}(4) = 1.4\times10^{-4}$ $P(C\ 1222) = \lambda t = (3.4\times10^{-5})(1008) = 3.4\times10^{-2}$	λ from Reference 1, p. 21

Event Address	Event Description	Calculated Probability	Comments
C 1223	Transfer pipe failure between TK-105 and TK-153	$P_b = t = (2.0x10^{-7})(4) = 8.0x10^{-7}$ = $P(C\ 1223) = \lambda t = (2.0x10^{-7})(1008) = 2.0x10^{-4}$	λ from Reference 1, p. 21
C 1224	Catastrophic failure of TK-105	$P_b = (2.4x10^{-7})(4) = 9.6x10^{-7}$ $P(C\ 1224) = \lambda t = (2.4x10^{-7})(1008) = 2.4x10^{-4}$	λ from Reference 1, p. 38
C 1225	Plugged transfer line	Assumed zero	
C 3211	Improperly calibrated pH probe	P(C 3211) = 6(.003) = .018	Table 20-7, Reference 2, Assume six demands
C 3212	pH element failure	$P = \frac{\lambda t}{2} = (6.4x10^{-4})(\frac{8}{2}) = 2.6x10^{-3}$	λ from Reference 1, p. 10 Functional test at sample
C 12121	No operator response to TK-153 low-level alarm	P = .003	Table 20-7, Reference 2, Basic human error rate
C 12122	Alarm failure	$P_b = 4.8x10^{-5} + 8.2x10^{-4} = 8.7x10^{-4}$ $p(C\ 12122) = P(C\ 121221) + P(C\ 121222) = .19$	
C 121221	Electrical circuitry failure	$P_b = (1.2x10^{-5})(4) = 4.8x10^{-5}$ $P = \lambda t = (1.2x10^{-5})(1008) = 1.2x10^{-3}$	λ from Reference 1, p. 10 t = 1008
C 121222	Level sensor failure (dip tube)	$P_b = 4(2.1x10^{-4}) = 8.2x10^{-4}$ $P = [1-exp(-\lambda t)]$ $P = [1-exp\{-(2.1x10^{-4})(1008)\}] = .19$	λ from Reference 1, p. 20

9413219.1579

APPENDIX C

DOSE IMPACTS FROM PROCESS DISTILLATE DISCHARGE HEADER

Westinghouse Hanford Company

Internal Memo

From: Nuclear Safety & Radiological Analysis
Phone: 6-2921/N1-31
Date: September 5, 1989
Subject: DOSE RATE ESTIMATES OF OVERHEAD PIPE

To: [redacted]

cc: P. D. Rittmann N1-31
D. D. Stepnewski N1-31
DCD File/LB

9413219.1580

The computer code ISOSHLD was run to assess the dose from an overhead pipe containing process distillate discharge. The results indicate only negligible dose rates.

The pipe was modeled in ISOSHLD as a 300-foot long cylindrical source, 2.067 inches in diameter, surrounded by a stainless steel shield 0.154 inch thick. The dose detector was then placed at varying distances from the pipe at the midpoint. The radionuclide inventory used is given in Table 1.

Table 1 Radionuclide Inventory

Nuclide	Activity (uCi/ml)
Strontium-90	1.8E-07
Ruthenium-103	4.0E-08
Ruthenium-106	1.1E-06
Iodine-129	3.4E-07
Cesium-137	5.3E-08
Promethium-147	1.2E-06
Uranium-238	2.3E-08
Plutonium-238	2.2E-07
Plutonium-239,240	1.4E-06
Plutonium-241	2.4E-05
Americium-241	1.8E-07

The resulting dose rates are as follows:

Dose Rates

Distance (in)	Dose (R/hr)
0	8.1E-08
12	1.9E-08
39	6.2E-09
79	3.0E-09

Hanford Operations and Engineering Contractor for the US Department of Energy

D. W. Bergmann
Page 2

These dose estimates indicate that no measurable dose would be received from residence near the pipe. The radioisotope concentrations used in this analysis are the maximum monthly concentrations expected. Nominal concentrations would be lower.

If there are any questions, please call.

David C. Deere
Engineer

Concurrence: D. D. Stepnewski, Manager
Nuclear Safety & Radiological Analysis

9412219.1581

ISOSHLD Input Deck

```
0          2  DOSE RATE ESTIMATES FROM OVERHEAD PIPE
 0 INCHES AWAY FROM STAINLESS STEEL PIPE
  &INPUT NEXT=1,IGEOM=11,X=8.0,SLTH=1830.0,
   T(1)=2.63,T(2)=0.39,NSHLD=2,JBUF=1,Y=915.0,
   NTHETA= 10, NPSI= 20, DELR= 6,
   OPTION=1,ISPEC=3,ICONC=1,
   WEIGHT(82) = 1.8E-07, WEIGHT(84) = 1.8E-07,
   WEIGHT(155)= 4.0E-08, WEIGHT(170)= 1.1E-06,
   WEIGHT(172)= 1.1E-06, WEIGHT(290)= 3.4E-07,
   WEIGHT(335)= 5.3E-08, WEIGHT(336)= 5.0E-08,
   WEIGHT(386)= 1.2E-06, WEIGHT(526)= 2.3E-08,
   WEIGHT(492)= 2.2E-07, WEIGHT(493)= 1.4E-06, WEIGHT(494)= 1.4E-06,
   WEIGHT(495)= 2.4E-05, WEIGHT(496)= 1.8E-07 &
 WATER  1    1.3
 IRON   9           6.5819
 TITAN  8           0.7137
1NICKEL 10          0.6344
12 INCHES AWAY FROM STAINLESS STEEL WALL
  &INPUT NEXT=4, X=33. &
39 INCHES AWAY FROM STAINLESS STEEL WALL
  &INPUT NEXT=4, X=103. &
79 INCHES AWAY FROM STAINLESS STEEL WALL
  &INPUT NEXT=4, X=204. &
 THE END !!
  &INPUT NEXT=6 & END
```

9413219.1582

Document Reviewed (Complete reference) Internal Memo to D. W. Bergmann, "Dose Rate Estimates of Overhead Pipe", September 5, 1989

Author(s) D. C. Deere

CHECKLIST FOR CALCULATION REVIEW

Yes	No	N/A	General Considerations
[X]	[ ]	[ ]	Problem completely defined.
[X]	[ ]	[ ]	Necessary assumptions explicitly stated and supported.
[X]	[ ]	[ ]	Computer codes and data files documented.
[X]	[ ]	[ ]	Data used in calculations explicitly stated in document.
[X]	[ ]	[ ]	Data checked for consistency with original source information as applicable.
[ ]	[ ]	[X]	Mathematical derivations checked including dimensional consistency of results.
[X]	[ ]	[ ]	Models appropriate and used within range of validity or use outside range of established validity justified.
[X]	[ ]	[ ]	Hand calculations checked for errors.
[X]	[ ]	[ ]	Code runstreams correct and consistent with analysis documentation.
[X]	[ ]	[ ]	Code output consistent with input and with results reported in analysis documentation.
[X]	[ ]	[ ]	Acceptability limits on analytical results applicable and supported. Limits checked against sources.
[X]	[ ]	[ ]	Safety margins consistent with good engineering practices.
[X]	[ ]	[ ]	Conclusions consistent with analytical results and applicable limits.
[X]	[ ]	[ ]	Results and conclusions address all points required in the problem statement.

Paul Rittmann 9-5-89

Technical Reviewer Approval Date

Yes	No	N/A	Environmental Calculations
[ ]	[ ]	[ ]	GENII (current version) used for radiological calculations.
[ ]	[ ]	[ ]	Appropriate receptor locations evaluated.
[ ]	[ ]	[ ]	Appropriate models (finite plume vs. semi-infinite cloud, building wake, etc.) used.
[ ]	[ ]	[ ]	Appropriate pathways evaluated for each receptor.
[ ]	[ ]	[ ]	Analysis consistent with HDOC Recommendations.

NA

HDOC Reviewer Approval Date

Note: Any calculations, comments, or notes generated as part of this review should be signed, dated and attached to this checklist. Such material should be labeled and recorded in such a manner as to be intelligible to a technically qualified third party.

94132019.1584

APPENDIX D

SUMMARY OF OPERATING REQUIREMENTS

SUMMARY OF OPERATING REQUIREMENTS

Requirement	Limit	Applicable PUREX Operating Document
1. $[OH^-]$ and $[NO_2^-]$ Concentration Requirements (Section 6.9)	See Table 1 (Section 1.1)	o Procedures o Process Control Manual
2. pH Probe Alarm Responses	See Figure 3 (Section 2.1)	o Procedures
3. TK-G7 pH Sampling Responses	See Figure 3 (Section 2.1)	o Procedures
4. TK-G7 Sampling Requirements	Minimum Once Every 8 Hours (Section 2.1)	o Procedures
5. TK-G7 Minimum Volume	3,000 Gallons (Section 2.1)	o Procedures
6. pH Probe Calibration Frequency	Once Per Week (Section 2.2)	o Procedures
7. Preparation for pH Probe Calibration	See Figure 4 (Section 2.2)	o Procedures
8. Characterization Sampling	See Figure 4 (Section 2.2)	o Procedures
9. pH Probe Failure	Maximum Operation During a Failure 16 Hours (Section 2.2) G7 Sampling Once Every 2 Hours Increased TK-153 Surveillance	o Procedures

9413219.1585

THIS PAGE LEFT BLANK INTENTIONALLY

9413219.1586

DISTRIBUTION SHEET

To	From	Page 1 of 3
DISTRIBUTION	PUREX SYSTEMS & TECHNOLOGY	Date 10/5/87
Project Title/Work Order: SAFETY EVALUATION -- PROCESS DISTILLATE DISCHARGE TO TANK FARMS		EDT No.
		ECN No 134976L

Name	MSIN	With Attach.	EDT/ECN & Comment	EDT/ECN Only
DG Baide	R1-51	X		
DK Bailey	S6-08	X		
RJ Baumhardt	R2-40	X		
DW Bergmann	S6-01	X		
GF Boothe	R3-20	X		
EE Borders	S6-01	X		
TW Bowman	S5-80	X		
HC Boyter	R2-52	X		
CL Brown	T5-50	X		
RC Brown	R3-20	X		
Buckley	S5-80	X		
FT Calapristi	H4-52	X		
P Dessaules	A4-25	X		
LP Diediker	T1-30	X		
GT Dukelow	R1-81	X		
JT Durnil	T5-15	X		
JH Ellis	S5-66	X		
MB Enghusen	S5-80	X		
RA Eschenbaum	S5-66	X		
JL Foster	R1-51	X		
RD Fox	S5-80	X		
SD Godfrey	S5-80	X		
ERH Guyman	H4-50	X		
DG Harlow	R2-01	X		
WM Harty	S5-80	X		
DC Hedengren	S6-01	X		
ME Hevland	R3-12	X		
JP Hinckley	R3-02	X		

DISTRIBUTION SHEET

To	From	Page 2 of 3
DISTRIBUTION	PUREX SYSTEMS & TECHNOLOGY	Date 10/5/89
Project Title/Work Order		EDT No.
SAFETY EVALUATION -- PROCESS DISTILLATE DISCHARGE TO TANK FARMS		ECN No 134976L

Name	MSIN	With Attach.	EDT/ECN & Comment	EDT/ECN Only
DB Howe	T1-30	X		
NW Kirsch	R2-12	X		
PF Kison	S5-66	X		
JR Knight	B4-54	X		
EJ Kosiancic	R2-67	X		
RA Kulick	S6-05	X		
RJ Landon	H4-50	X		
GJ LeBaron	S5-80	X		
EE Leitz	R3-02	X		
WE Matheison	S5-80	X		
Midgett	S5-66	X		
KJ Moss	R2-08	X		
SM Nielson	A4-25	X		
DK Oestreich	R3-02	X		
GC Owens	L6-5	X		
MA Payne	S5-66	X		
PR Prevo	N1-73	X		
PD Rittman	N1-31	X		
ED Robbins	S6-70	X		
DH Shuford	S5-02	X		
JM Siemer	R3-02	X		
GC Stickland	S6-05	X		
LN Sutton	R2-58	X		
RW Szempruch	S6-05	X		
DJ Thompson	S6-01	X		
Van der Cook	S6-07	X		
VL Wagner	S6-05	X		
RL Walser	S5-80	X		

DISTRIBUTION SHEET

To	From	Page 3 of 3
DISTRIBUTION	PUREX SYSTEMS & TECHNOLOGY	Date 10/5/87
Project Title/Work Order		EDT No.
SAFETY EVALUATION -- PROCESS DISTILLATE DISCHARGE TO TANK FARMS		ECN No 134776L

Name	MSIN	With Attach.	EDT/ECN & Comment	EDT/ECN Only
DD Wodrich	R2-23	X		
ST Smith	S1-53	X		

9413219.1509

A-6000-135 (12/87)