S

HNF-EDC-02-12437

ENGINEERING DOCUMENT CHANGE CONTROL

HPAC 0861

Change Identification

21. Release:

SEP 18 2002
DATE:
STA: 15
HANFORD RELEASE
ID: 20

1. Change Category:
- ○ Direct Revision
- ○ Supplemental Change
- ○ Page Change
- ○ Supersedure
- ○ Cancel/Void
- ◉ New

2. Classification of Change:
- ◉ Major
- ○ Minor
- ☐ Conf Baseline

3. Date: 09/18/02

4. Originator's Name, Organization, MSIN, and Telephone No.:
D. J. Moak, Duratek Federal Services, Inc., NW Operations / H1-11 / 372-8031

5. USQ Required? ○ Yes ◉ No
USQ No.:
CX No.: NA

6. Technical Authority: M. J. Hall

7. Project/Program (WMP, FFTF, etc.): SNF

8. Area: 100K

9. Building: 105-KE

10. Reviewer Designator: NA

11. Plan:
This SAP details the necessary steps to ensure that adequate information is obtained to meet applicable requirements for acceptance of the waste stream at the LERF/ETF. Characterization will be based on a combination of process knowledge and analytical data. Sampling may be reduced once a baseline is established and process knowledge is confirmed. Constituents of concern will be sampled and analyzed as outlined in this SAP.

12. Criteria:
The process used to determine the characterization data is generally aligned with the seven-step process outlined in U.S. Environmental Protection Agency guidance.

13. Change Description:
New text document.

14. Documents Issued or Changed by this EDC:

Document	Page	Revision	Comments
HNF-11967		0	

15. Technical Justification (Need):
This SAP is required per U.S. Department of Energy, Richland Operations Office (RL) DOE/RL 99-89, Remedial Design Report and Remedial Action Work Plan for the K Basins Interim Remedial Action.

Evaluation and Coordination

16. Change Impact:
None

17. Affected Documents:

Document Number	Page	Revision	Person Notified/Comments
NA	NA	NA	NA

ENGINEERING DOCUMENT CHANGE CONTROL (continued)

Verification

18. Verification:

Verification performed as document review by facility engineering and environmental managers. This review is documented on the signature page of the document.

19. Approvals/Reviews:

Initials, Last Name, Date, MSIN	Initials, Last Name, Date, MSIN
Technical Authority: M. J. Hall 9/18/02 H1-11	Technical Authority Manager: D. J. Moak 9/18/02 H1-11
Reviewer (Title):	Reviewer (Title):
Reviewer (Title):	Reviewer (Title):
Reviewer (Title):	Reviewer (Title):
Reviewer (Title):	Reviewer (Title):

Solution

20. Change Description (Solution) - Continuation Sheet:

NA

DISTRIBUTION SHEET

To	From	Page 1 of 1
Distribution	Duratek Fed. Services, Inc., NW	Date September 18, 2002
Project Title/Work Order		~~EDT No.~~ HNF- EDC-02-12437
HNF-11967, Rev. 0, Sampling and Analysis Plan for Characterization of 105-K East Basin Wastewater		ECN No.

Name	MSIN	Text With All Attach.	Text Only	Attach./ Appendix Only	EDT/ECN Only
L. T. Blackford (H)	T3-04	x			
R. R. Connolly (H)	T3-04	x			
P. T. Day (H)	X3-80	x			
D. L. Flyckt (H)	S6-71	x			
M. K. French (H)	T3-06	x			
M. A. Green (H)	X3-74	x			
R. M. Jochen (H)	X3-74	x			
K. J. Lueck (H)	S6-72	x			
D. J. Moak (H)	H1-11	x			
C. A. Rodriguez (H)	A4-79	x			
D. R. Schell (H)	L1-06	x			
R. W. Szelmeczka (H)	S6-72	x			
D. J. Watson (H)	X3-79	x			
FH Central Files (H)	B1-07	x			
DFSNW Records Mgmt. (S. A. Myers) (H)	H1-11	x			
RL Reading Room (H)	H2-53	x			

A-6000-135 (10/97)

0058103

S

HNF-11967
Revision 0
HNF-EDC-02-12437

Sampling and Analysis Plan for Characterization of 105-K East Basin Wastewater

Document Type: WP Division: WM

M. J. Hall
Fluor Hanford, Inc.

RECEIVED
SEP 25 2002
EDMC

Date Published
September 2002

Prepared for the U.S. Department of Energy
Assistant Secretary for Environmental Management

Project Hanford Management Contractor for the
U.S. Department of Energy under Contract DE-AC06-96RL13200

Fluor Hanford
P.O. Box 1000
Richland, Washington

SEP 18 2002
DATE:
STA: 15
HANFORD RELEASE
ID: 20

Release Approval Date 9/18/02 Release Stamp

Approved for public release; further dissemination unlimited

LEGAL DISCLAIMER

This report was prepared as an account of work sponsored by an agency of the United States Government. Neither the United States Government nor any agency thereof, nor any of their employees, nor any of their contractors, subcontractors or their employees, makes any warranty, express or implied, or assumes any legal liability or responsibility for the accuracy, completeness, or any third party's use or the results of such use of any information, apparatus, product, or process disclosed, or represents that its use would not infringe privately owned rights. Reference herein to any specific commercial product, process, or service by trade name, trademark, manufacturer, or otherwise, does not necessarily constitute or imply its endorsement, recommendation, or favoring by the United States Government or any agency thereof or its contractors or subcontractors. The views and opinions of authors expressed herein do not necessarily state or reflect those of the United States Government or any agency thereof.

This report has been reproduced from the best available copy.

Printed in the United States of America

Total Pages: 27

Signature Page

M. A. Green — 9/11/02
M. A. Green, Manager
Spent Nuclear Fuel Balance of Plant
Fluor Hanford, Inc., Richland, Washington.
Date

R. T. Winward ECO for DJ Watson — 9/11/02
D. J. Watson, Environmental Compliance Officer
Spent Nuclear Fuel Environmental Protection
Fluor Hanford, Inc., Richland, Washington.
Date

Brenda R. Connolly for LT Blackford — 9/11/02
L. T. Blackford, Manager
Waste Services
Duratek Federal Services of Hanford
Date

D. R. Schell — 9/11/02
D. R. Schell
River Corridor Project/Environment, Safety Health & Quality
Fluor Hanford, Inc., Richland, Washington.
Date

J Hee for — 9/11/02
R. W. Szelmeczka, Environmental Compliance Officer
Liquid Waste Processing Facility
Duratek Federal Services of Hanford
Date

Key Words: Sampling; Analysis; Characterization; Wastewater.

Abstract: This sampling and analysis plan (SAP) presents the rationale and strategy for sampling and analysis activities to support transfer of water from the 105-K East Basin (KE Basin) via tanker truck to the Liquid Effluent Retention Facility (LERF)/Effluent Treatment Facility (ETF). This SAP is required per U.S. Department of Energy, Richland Operations Office (RL) DOE/RL 99-89, *Remedial Design Report and Remedial Action Work Plan for the K Basins Interim Remedial Action.*

This SAP details the necessary steps to ensure that adequate information is obtained to meet applicable requirements for acceptance of the waste stream at the LERF/ETF. Characterization will be based on a combination of process knowledge and analytical data. Sampling may be reduced once a baseline is established and process knowledge is confirmed. Constituents of concern will be sampled and analyzed as outlined in this SAP.

CONTENTS

1.0 INTRODUCTION 1
2.0 DATA QUALITY OBJECTIVES 1
2.1 GENERAL INFORMATION 1
2.2 WASTE STREAM DESCRIPTION 2
2.2.1 Basin Water System Recirculation and Cooling 4
2.2.2 Skimmer Water Cleanup System 4
2.3 CHARACTERIZATION OBJECTIVES 7
2.4 EXISTING CHARACTERIZATION DATA 9
2.5 PARAMETERS AND/OR CONSTITUENTS OF CONCERN TO COMPLETE CHARACTERIZATION 11
2.6 DECISION RULE 12
2.7 SAMPLE COLLECTION STRATEGY 13
2.8 REVIEW OF SAMPLE COLLECTION DESIGN 14
3.0 PROJECT RESPONSIBILITIES AND POINTS OF CONTACT 14
3.1 PROJECT MANAGER 14
3.2 SAMPLING COORDINATOR 14
3.3 ANALYTICAL LABORATORY 15
4.0 SAMPLING METHODS AND REQUIREMENTS 15
4.1 COLLECTION OF SAMPLES 15
4.2 QUALITY CONTROL SAMPLES 16
4.3 EQUIPMENT, SAMPLE CONTAINERS, AND SAMPLE PRESERVATION 16
4.4 SAMPLE IDENTIFICATION AND CHAIN OF CUSTODY 16
4.5 DOCUMENTATION 17
4.6 PROBLEMS OR DEVIATIONS FROM SAMPLING PROCEDURES 17
5.0 SAMPLE ANALYSIS METHODS AND REQUIREMENTS 17
5.1 LABORATORY 17
5.2 ANALYSIS METHODS AND HOLDING TIMES 18
5.3 QUALITY CONTROL 18
5.4 ANALYSIS REPORT 18
5.5 PROBLEMS OR DEVIATIONS FROM ANALYSIS METHODS 18
5.6 UNUSED SAMPLE PORTIONS 18
6.0 DATA EVALUATION 18
7.0 RECORDS 19
8.0 REFERENCES 19

FIGURES

Figure 1. KE Basin Recirculation and Skimmer Water Systems Flow Schematic 3
Figure 2. KE Basin Sample Points 6

TABLES

Table 1. Sampling and Analysis Requirements. 7
Table 2. KE Basin Grab Water Samples Taken From Sample Point 10 (Center of Basin)..... 9
Table 3. K Basin Anion Analysis (105 KE). 9
Table 4. Constituents of Concern..... 12

TERMS

BRC	basin recirculation cooling and cleanup
nCi/g	nanocurie per gram
DFSNW	Duratek Federal Services, Inc., Northwest Operations
DOE/RL	U.S. Department of Energy, Richland Operations Office
EPA	U.S. Environmental Protection Agency
ERDF	Environmental Restoration Disposal Facility
ETF	Effluent Treatment Facility
FH	Fluor Hanford, Inc.
gal	gallon
IXM	ion exchange module
KE Basin	105-K East Basin
L	liter
LERF	Liquid Effluent Retention Facility
LWPF	Liquid Waste Processing Facilities
µm	micrometer
µg	microgram
µS/cm	microsiemens per centimeter
MDA	minimum detectable activity
MDL	maximum detectable limit
pCi/L	picocurie per Liter
PCB	polychlorinated biphenyl
PQL	practical quantification limit
ppb	part per billion
psi	pounds per square inch
RL	U.S. Department of Energy, Richland Operations Office
SAP	sampling and analysis plan
SNF	Spent Nuclear Fuel
WAC	*Washington Administrative Code*
water	KE Basin waste water
WMP	Waste Management Project

1.0 INTRODUCTION

This sampling and analysis plan (SAP) presents the rationale and strategy for sampling and analysis activities to support transfer of water from the 105-K East Basin (KE Basin) via tanker truck to the Liquid Effluent Retention Facility (LERF)/Effluent Treatment Facility (ETF). This SAP is required per U.S. Department of Energy, Richland Operations Office (RL) DOE/RL 99-89, *Remedial Design Report and Remedial Action Work Plan for the K Basins Interim Remedial Action.* This SAP is applicable for current Spent Nuclear Fuel (SNF) removal operations and will be reviewed, and revised as necessary, prior to KE Basin water removal associated with deactivation.

The KE Basin contains approximately 4.9 million L (1.3 million gal) of water used to shield and cool the SNF. Water that will be sent to the LERF/ETF is currently maintained in a closed-loop system and is continually recycled from the basins, circulated through existing treatment systems, then returned to the basins. This treatment is required to maintain adequate water quality and temperatures in the basin and also functions to reduce concentrations of partially soluble radionuclides. The primary contaminants in the water are soluble (e.g., ^{3}H) and partially soluble radionuclides (e.g., ^{134}Cs and ^{137}Cs). Based on concentrations of chemical constituents and process knowledge, the water is not currently regulated as mixed waste or as a polychlorinated biphenyl (PCB) remediation waste.

This SAP details the necessary steps to ensure that adequate information is obtained to meet applicable requirements for acceptance of the waste stream at the LERF/ETF. Characterization will be based on a combination of process knowledge and analytical data. Sampling may be reduced once a baseline is established and process knowledge is confirmed. Constituents of concern will be sampled and analyzed as outlined in this SAP.

2.0 DATA QUALITY OBJECTIVES

This section of the SAP provides a summary of the KE Basin wastewater (referred to as water in this SAP) characterization and the data needed to confirm process knowledge and define waste management requirements. The process used to determine this information is generally aligned with the seven-step process outlined in U.S. Environmental Protection Agency (EPA) guidance. However, a less involved process was used because the KE Basin water stream is well within the LERF/ETF waste acceptance criteria.

2.1 GENERAL INFORMATION

Decisions for this characterization effort are based on the Fluor Hanford, Inc. (FH) SNF Project and the Waste Management Project (WMP). Duratek Federal Services, Inc., Northwest Operations (DFSNW), or another qualified contractor, will be utilized to perform sampling. FH Analytical Services has provided input regarding analytical capabilities and will coordinate completion of the analytical activities required per this SAP. Upon completion of sampling and

analysis, the SNF Project and WMP Waste Services will evaluate the process knowledge and analysis data and complete the ETF waste profile sheet. The FH WMP Liquid Waste Processing Facilities (LWPF) will review the waste profile and make the final acceptance decision to the LERF/ETF. RL and EPA staff provided input to the approach and characterization requirements to be finalized in this SAP.

FH is currently the contractor responsible for the work scope in this SAP. This SAP will not be revised if names, performing organizations, or contractors change. The new contractor or organization will assume the responsibilities and requirements in this SAP.

2.2 WASTE STREAM DESCRIPTION

The KE Basin water system consists of two distinct systems: the basin recirculation cooling and cleanup (BRC) system (commonly referred to as the primary recirculation system) and the skimmer water cleanup (SKW) system. The KE Basin recirculation and skimmer water systems flow schematic is shown in Figure 1. The BRC system (discussed in Section 2.2.1) is not part of the tanker truck water transfer process. The SKW will be the primary water discharge system to the tanker truck.

Figure 1. KE Basin Recirculation and Skimmer Water Systems Flow Schematic.

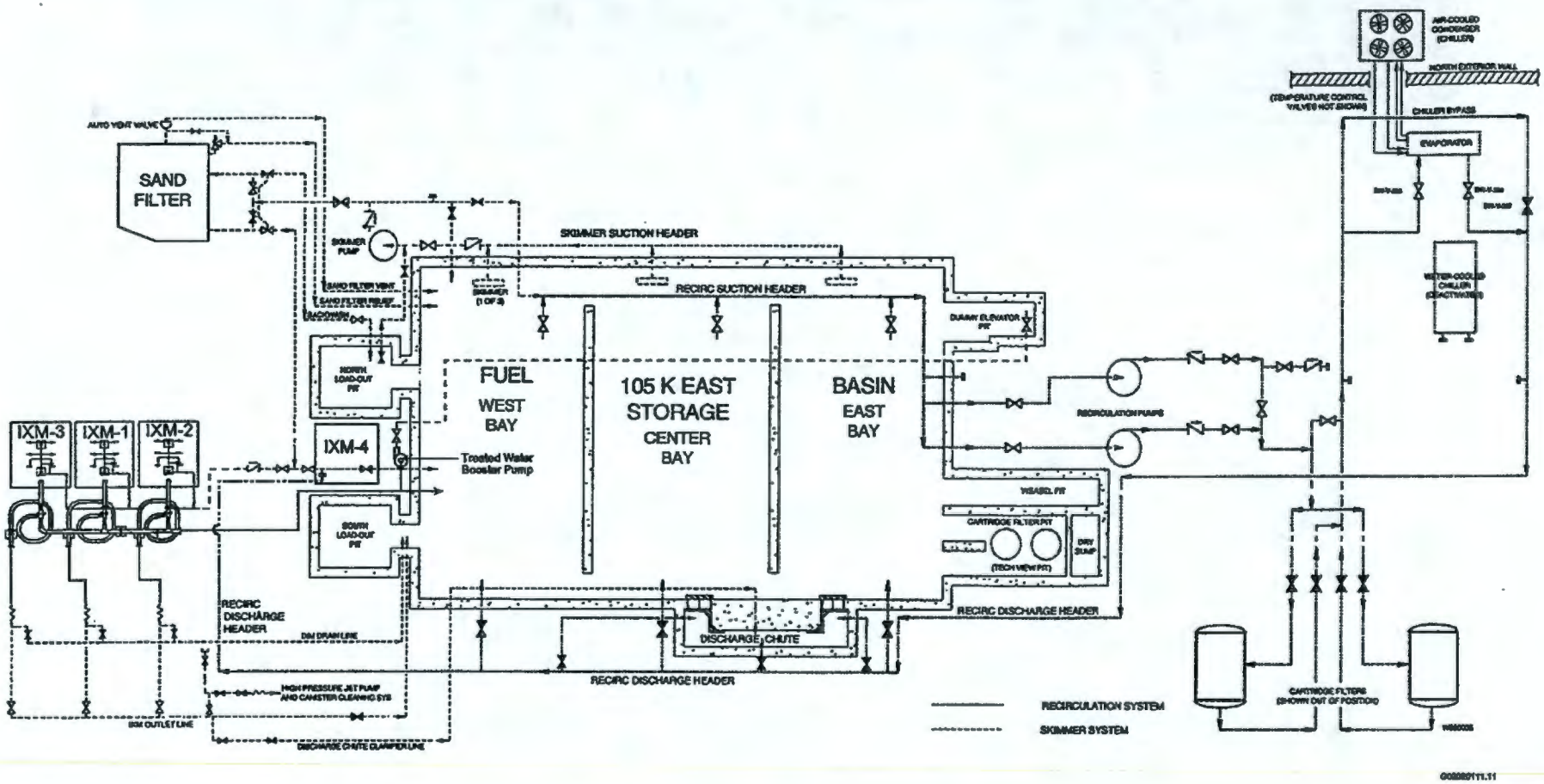

2.2.1 Basin Water System Recirculation and Cooling

Water from the fuel storage basins enters the respective BRC piping intakes at the north ends of the east bay, center bay, and west bay at a nominal total flow rate of 1,895 L/min (500 gal/min) and flows into one of the two recirculation cooling pumps. From the pump, basin water is diverted to the air-cooled refrigeration water chiller evaporator. The air-cooled refrigeration water chiller cools the water to maintain the basin water temperature at approximately 50 °F (10 °C).

The flow from the chiller evaporator is approximately 720 L/min (190 gal/min) out of the nominal total flow rate of 1,895 L/min (500 gal/min). A portion of the flow may be directed to the discharge chute with the remainder of the flow piped to the transfer channel of the south load-out pit and the dummy elevator pit.

2.2.2 Skimmer Water Cleanup System

The SKW system removes radioactive and nonradioactive ionic species by processing the water through ion exchange modules (IXM) and maintains water clarity by processing the water through a sand filter. During normal operation of the SKW system in cleanup mode, the basin water enters three weirs at 455 to 569 L/min (120 to 150 gal/min) and is pumped through the sand filter for particulate removal. The sand filter is comprised of a housing and filter media and is located immediately west of the skimmer pump in the transfer area.

When the water exits the sand filter, it is split with a nominal flow of 606 L/min (160 gal/min) going through an IXM. The remainder of the flow goes to either the west bay of the basin or to the south load-out pit. There are four IXMs in the KE Basin that remove soluble radionuclides from the basin water and are located in the basin transfer bay area. The four IXMs are part of the BRC and SKW systems; however, only one IXM is running at a time with the other IXMs in standby. Each IXM contains 0.0991 m^3 (3.5 ft^3) of mixed cation and anion organic bead resins optimized to remove cesium and strontium and other dissolved radionuclides and to control pool chemistry.

The inlet and outlet water of the IXMs has composite sampling performed weekly to estimate the quantity of the following constituents contained in the operating IXM. Monthly grab samples are taken from sample point 10 (center of basin) for IXM characterization for disposal. The constituents are analyzed monthly unless indicated as weekly. Figure 2, "KE Basin Sample Points," shows the locations of the composite samplers. The detection limits for the following radionuclides are low enough to ensure that the LERF/ETF acceptance criteria are met.

- Total alpha (weekly)
- ^{238}Pu
- $^{239/240}Pu$
- ^{137}Cs (weekly and monthly)
- ^{90}Sr
- ^{234}U
- ^{235}U
- ^{238}U
- ^{241}Am
- ^{144}Ce
- $^{144}Ce/Pr$
- ^{60}Co
- ^{152}Eu
- ^{154}Eu
- ^{155}Eu
- ^{94}Nb
- ^{103}Ru
- ^{106}Ru
- ^{125}Sb
- ^{113}Sn
- ^{65}Zn
- ^{3}H

Water samples are removed from the inlet and outlet streams by the composite samplers of the basin instrumentation system and are sent to the laboratory for analysis. When an IXM ^{137}Cs removal efficiency drops to approximately 90% or a total alpha concentration of 80 nCi/g is reached, the spent IXM is replaced.

Figure 2. KE Basin Sample Points.

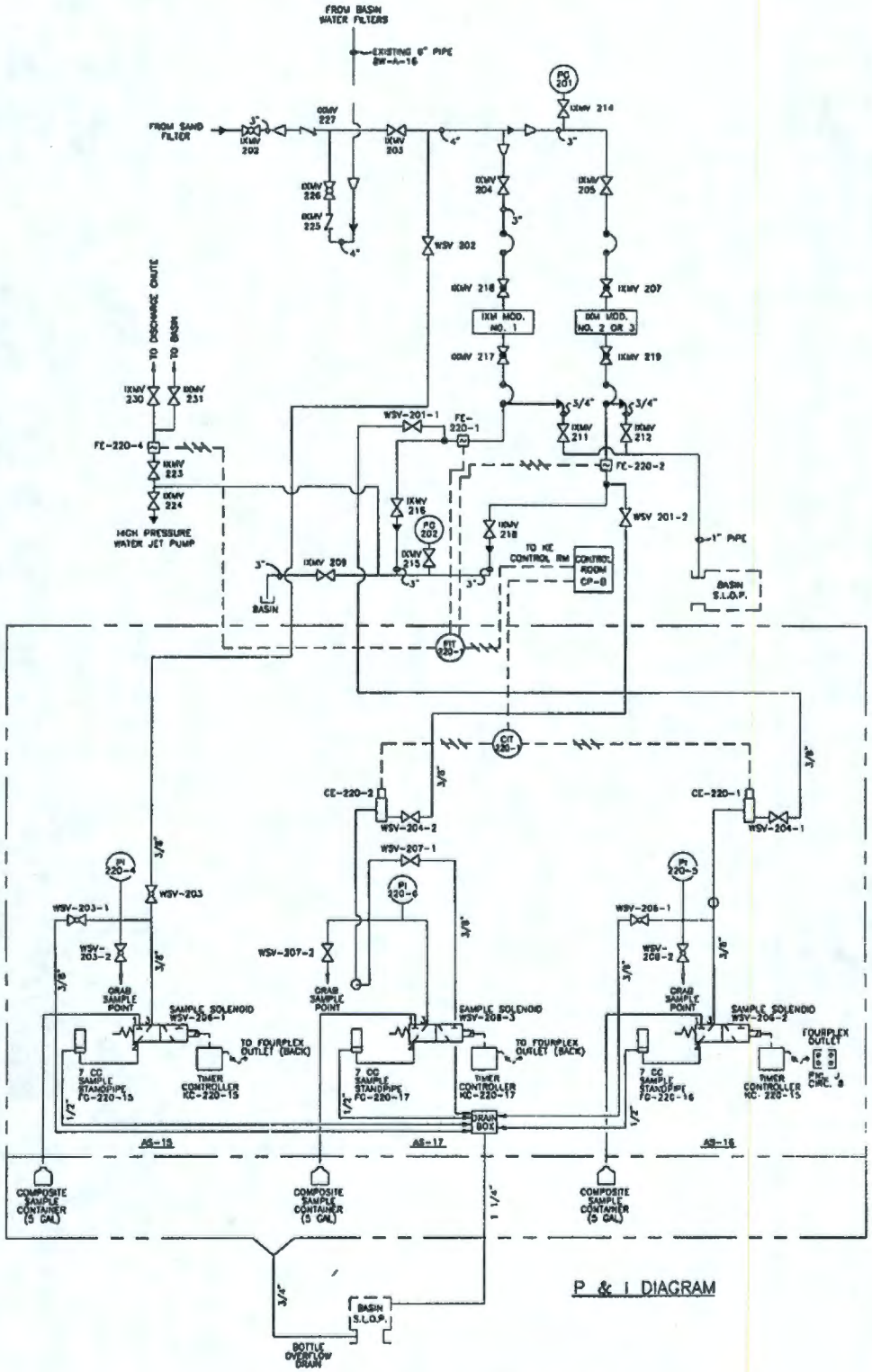

BEST AVAILABLE COPY

2.3 CHARACTERIZATION OBJECTIVES

Data obtained from the sampling and analysis activities, in combination with process sample data, will be used to determine if the waste stream meets the LERF/ETF acceptance requirements given in HNF-3172, *Liquid Waste Processing Facilities Waste Acceptance Criteria*. Preliminary sampling and analysis from KE Basin water has been performed to assist in determining constituents of concern for future tanker shipments. The initial sampling and analysis requirements are provided in Table 1. Constituents of concern were determined from the existing process knowledge and preliminary data that will serve as the basis for future sampling and analysis.

Table 1. Sampling and Analysis Requirements. (2 sheets total)

Compound	Container	Preservative	Maximum Holding Time	MDL/MDA	PQL	Method
RADIONUCLIDES						
^{3}H	Glass		180 Days	400 pCi/L		Liquid Scintillation
^{99}Tc				5 pCi/L		Liquid Scintillation
^{14}C	Glass		180 Days	4 pCi/L		Liquid Scintillation
^{129}I				25 pCi/L		Gamma Energy Analysis (GEA)
^{60}Co	Plastic	HNO_3; pH < 2	180 Days	50 pCi/L		GEA
^{90}Sr				2 pCi/L		Beta Counting
^{94}Nb				50 pCi/L		GEA
^{103}Ru				50 pCi/L		GEA
^{106}Ru				140 pCi/L		GEA
^{113}Sn				50 pCi/L		GEA
^{134}Cs				50 pCi/L		GEA
^{137}Cs				50 pCi/L		GEA
^{144}Ce				200 pCi/L		GEA
^{154}Eu				50 pCi/L		GEA
^{155}Eu				50 pCi/L		GEA
^{226}Ra	Plastic	HNO_3; pH < 2	180 Days	3 pCi/L		Alpha Energy Analysis (AEA)
^{237}Np				2 pCi/L		AEA
^{238}Pu				2 pCi/L		AEA
$^{239/240}Pu$				2 pCi/L		AEA
^{241}Pu				20 pCi/L		Calculated from Pu-239
^{241}Am				0.18 pCi/L		AEA
^{244}Cm				0.17 pCi/L		AEA
METALS						
Aluminum	Glass or Plastic	HNO_3; pH < 2	180 days; Mercury, 28 days	28 µg/L	280 µg/L	6010
Antimony				0.5 µg/L	5 µg/L	EPA-600, 200.8
Arsenic				0.4 µg/L	4 µg/L	EPA-600, 200.8
Barium				4.4 µg/L	44 µg/L	6010
Cadmium				0.1 µg/L	1 µg/L	EPA-600, 200.8
Calcium				23 µg/L	230 µg/L	6010
Chromium				0.3 µg/L	3 µg/L	EPA-600, 200.8
Copper				4.4 µg/L	44 µg/L	6010
Iron				21 µg/L	210 µg/L	6010
Lead				1.2 µg/L	12 µg/L	EPA-600, 200.8

Compound	Container	Preservative	Maximum Holding Time	MDL/MDA	PQL	Method
Magnesium				61 µg/L	610 µg/L	6010
Manganese				4.4 µg/L	44 µg/L	6010
Mercury				0.1 µg/L	1 µg/L	EPA-600, 200.8
Nickel				11 µg/L	111 µg/L	6010
Potassium				655 µg/L	6550 µg/L	6010
Selenium				0.3 µg/L	3 µg/L	EPA-600, 200.8
Silicon				22 µg/L	220 µg/L	6010
Silver				4.4 µg/L	44 µg/L	6010
Sodium				32 µg/L	320 µg/L	6010
Uranium				0.1 µg/L	1 µg/L	EPA-600, 200.8
Vanadium				5.6 µg/L	56 µg/L	6010
Zinc				4.4 µg/L	44 µg/L	6010
ORGANICS						
PCBs	Amber Glass	Cool to 4 °C by refrigeration	7 days to extract/40 days after ext.			
Aroclor-1016					0.2 ppb	8082
Aroclor-1221					0.4 ppb	8082
Aroclor-1232					0.2 ppb	8082
Aroclor-1242					0.2 ppb	8082
Aroclor-1248					0.2 ppb	8082
Aroclor-1254					0.2 ppb	8082
Aroclor-1260					0.2 ppb	8082
Total Organic Carbon	Amber Glass	H_2S0_4, Cool to 4 °C by refrigeration	28 days		0.3 mg/L	9060
GENERAL CHEMISTRY						
Total Suspended Solids		Cool to 4 °C by refrigeration	7 days		1 mg/L	EPA 160.2
pH			As soon as practical			EPA 150.1
Gross Alpha	Glass	HNO_3; pH < 2	180 Days	3 pCi/L		Proportional Counter
Gross Beta	Glass	HNO_3; pH < 2	180 Days	4 pCi/L		Proportional Counter

Notes:

- Another method may be substituted, with sampling coordinator concurrence, if the PQL can still be met.
- Method modifications are documented and approved by Washington State Department of Ecology or U.S. Environmental Protection Agency.
- Container size will be determined by the laboratory.
- Analytical limits are based on the quality of the KE Basin water. Limits can be changed, with prior approval by the sampling coordinator. Reported detection limits will be indicated on the final report.
- PCBs will be reported down to the MDL. Values on the analytical report for PCBs falling between the MDL and PQL will be J-flagged.

°C = degree Celsius
EPA = U.S. Environmental Protection Agency
MDA = minimum detectable activity
MDL = maximum detectable limit
µg/L = microgram per Liter
mg/L = milligram per Liter
PCB = polychlorinated biphenyl
pCi/L = picocurie per Liter
ppb = part per billion
PQL = practical quantification limit

2.4 EXISTING CHARACTERIZATION DATA

Extensive information on the source and nature of the KE Basin water already exists. These data include radiological data from periodic sampling done on the KE Basin water, sludge characterization data, PCB data, radiological data from routine process sampling, and process knowledge.

The source-term for all of the radionuclides that could reasonably be expected in the K Basins is from N Reactor fuel and associated activation products. Physical and chemical processes occurring as the basin water contacted the fuel are known to alter the ratios of various radionuclides. A summary of the existing radiological data is found in HNF-6495, *Sampling and Analysis Plan for K Basins' Debris.* Radionuclide process sample results for KE Basin grab water samples taken from sample point 10 (center of basin) are listed in Table 2. The existing radionuclide data and future characterization samples will be used to characterize the waste for LERF/ETF processing.

Table 2. KE Basin Grab Water Samples Taken From Sample Point 10 (Center of Basin).

Sample Number	Am-241	Cs-137	Pu-238	Pu-239/240	Sr-90	H-3	U-234	U-235	U-238
133KEB10	6.60E+03	5.34E+06	1.20E+03	7.60E+03	2.60E+06	2.80E+06	2.40E+01	1.50E+01	1.20E+01
159KEBMFP	1.40E+03	2.10E+06	6.30E+02	3.70E+03	9.40E+05	2.80E+06	1.60E+01	2.40E+01	1.90E+01
190KWB10	1.60E+03	1.27E+04	3.80E+02	2.20E+03	4.10E+05	1.10E+05	3.80E+01	2.30E+01	1.70E+01
213KEBMFP	4.90E+03	2.89E+06	6.80E+02	4.40E+03	1.20E+06	2.80E+06	4.90E+01	3.90E+01	3.30E+01
237KEB10	6.10E+03	4.31E+06	1.10E+03	6.80E+03	2.10E+06	2.90E+06	2.90E+01	8.70E+00	1.60E+01
267KEB10	4.00E+00	2.51E+06	6.60E-01	4.70E+00	2.50E+06	2.70E+06	5.20E-02	1.80E-02	1.70E-02
291KEB10	6.70E+03	3.15E+06	6.80E+02	4.10E+03	1.30E+06	2.80E+06	7.10E+01	3.10E+01	3.30E+01
004KEB10	6.60E+03	2.92E+06	1.00E+03	6.60E+03	1.00E+06	2.80E+06	1.10E+02	4.00E+01	6.20E+01
034KEB10	6.60E+03	3.02E+06	1.30E+03	8.40E+03	1.20E+06	2.80E+06	5.20E+01	1.70E+01	1.80E+01
058KEB10	6.00E+03	3.45E+06	2.00E+03	1.30E+04	1.30E+06	2.80E+06	2.40E+01	4.00E+00	1.90E+01
084KEB10	6.40E+03	3.65E+06	8.30E+02	5.10E+03	1.20E+06	2.70E+06	4.30E+01	2.60E+01	1.90E+01
116KEB10	3.40E+03	3.12E+06	7.50E+02	4.90E+03	1.10E+06	2.70E+06	5.50E+01	2.40E+01	1.70E+01
137KEB10	7.20E+03	3.77E+06	7.50E+02	4.60E+03	1.70E+06	2.80E+06	2.10E+01	1.30E+01	1.20E+01
Average	**4.88E+03**	**3.10E+06**	**8.69E+02**	**5.49E+03**	**1.43E+06**	**2.58E+06**	**4.09E+01**	**2.04E+01**	**2.13E+01**

Extensive data exists for anionic species for KE Basin grab water samples taken from sample point 10 (center of basin). These results are presented in Table 3 and demonstrate that the anion results are consistently very low. The existing anion data will be used to characterize the waste for LERF/ETF processing. Future characterization samples will not be analyzed for anions unless process knowledge indicates a significant change has occurred.

Table 3. K Basin Anion Analysis (105KE).
(see below MCO limits)

Sample#	Sample Date	Report Number	Lab	Bromide	Chloride	Fluoride	Nitrate	Nitrite	Phosphate	Sulfate
				mg/L (ppm)						
071KEB10	05/02/2000	20000187	222-S	<0.125	<0.017	<0.012	<0.139	<0.108	<0.12	<0.138
152KEB10	08/08/2000	20001258	WSCF	<0.10	<0.03	<0.007	<0.04	<0.02	<0.06	<0.20
183KEB10	09/12/2000	20001464	WSCF	<0.10	<0.03	<0.007	<0.04	<0.02	<0.06	<0.20
203KEB10	10/10/2000	20001608	WSCF	<0.10	<0.03	<0.007	<0.04	<0.02	<0.06	0.203
231KEB10	11/14/2000	20001777	WSCF	<0.10	<0.03	<0.007	<0.04	<0.02	<0.06	<0.20
252KEB10	12/12/2000	20001904	WSCF	<0.10	0.112	<0.007	<0.04	<0.02	<0.06	0.407
011KEB10	01/09/2001	20010033	WSCF	<0.10	<0.03	<0.007	<0.04	<0.02	<0.06	<0.20
041KEB10	02/13/2001	20010233	WSCF	<0.10	0.044	<0.007	<0.04	<0.02	<0.06	<0.20
064KEB10	03/13/2001	2001385	WSCF	<0.10	0.044	<0.007	<0.04	<0.02	<0.06	<0.20
087KEB10	04/10/2001	20010517	WSCF	<0.10	<0.03	<0.007	<0.04	<0.02	<0.06	<0.20
109KEB10	05/07/2001	20010653	WSCF	<0.10	<0.03	<0.007	<0.04	<0.02	<0.06	<0.20
141KEB10	06/12/2001	20010811	WSCF	<0.10	<0.03	<0.007	<0.04	<0.02	<0.06	<0.20
166KEB10	07/10/2001	20010921	WSCF	<0.10	<0.03	<0.007	0.041	<0.02	<0.06	0.232
196KEBMFP	08/14/2001	20011101	WSCF	<0.10	<0.03	<0.007	<0.04	<0.02	<0.06	<0.20
220KEBMFP	09/12/2001	20011230	WSCF	<0.10	<0.03	<0.007	<0.04	<0.02	<0.06	<0.20
244KEB10	10/09/2001	20011352	WSCF	<0.10	<0.03	<0.007	<0.04	<0.02	<0.06	<0.20
274KEB10	11/13/2001	20011517	WSCF	<0.10	<0.03	<0.007	<0.04	<0.02	<0.06	<0.20
298KEB10	12/11/2001	20011628	WSCF	<0.10	<0.03	<0.007	<0.04	<0.02	<0.06	<0.20
014KEB10	01/08/2002	20020031	WSCF	<0.10	<0.03	<0.007	<0.04	<0.02	<0.06	0.216
038KEB10	02/11/2002	20020211	WSCF	<0.10	<0.03	<0.007	<0.04	<0.02	<0.06	<0.20
066KEB10	03/12/2002	20020334	WSCF	<0.10	<0.03	<0.007	<0.04	<0.02	<0.06	0.257
091KEB10	04/09/2002	20020442	WSCF	<0.10	<0.03	<0.007	<0.04	<0.02	<0.06	<0.20
124KEB10	05/14/2002	20020693	WSCF	<0.10	<0.03	<0.007	<0.04	<0.02	<0.06	0.229
146KEB10	06/11/2002	20020847	WSCF	<0.10	<0.03	<0.007	<0.04	<0.02	<0.06	0.214
166KEB10	07/09/2002	20020955	WSCF	<0.10	<0.03	0.173	<0.04	<0.02	<0.06	0.228
Maximum Constituent Concentration to Date				0	0.112	0.173	0.041	0	0	0.407
MCO Limits per HNF-S-0426 Rev. 6 "Performance Spec for MCO"				N/A	< 1.0 ppm	<0.25 ppm	< 1.0 ppm	N/A	< 1.0 ppm	< 1.0 ppm

A waste designation has been completed on the sludge from the K Basins. The results demonstrated that the sludge is not a dangerous waste. The rationale for this designation is documented in RL Letter 01-SFO-051, *Completion of Waste Designation for K Basin Sludge Waste Streams* and Letter FH-0100738, *Completion of Waste Designation for K Basin Sludge Waste Streams*. Neither the fuel nor the sludge is regulated as a dangerous waste under *Washington Administrative Code* (WAC) 173-303. Therefore, the basin water is not considered a dangerous waste just because it has been in contact with the fuel or the sludge.

Sludge and water from a number of locations in the K East Basins have been sampled and analyzed for PCBs. Sludge from the K East floor, K East Weasel Pit and K East canisters contained Aroclor 1254; however, no Aroclors were detected in the canister water decant samples. The complete results are documented in HNF-SP-1201, *Analysis of Sludge from Hanford K East Basin Canisters.* The concentration of PCBs in the preliminary KE water sample was reported as <0.2 μg/L (ppb). PCBs are not expected in the KE Basin water; however, PCB sampling will be performed to confirm the water meets the LERF/ETF acceptance criteria. The PCB sampling frequency is defined in Section 2.7.

Volatile organics are not present in the K Basins based on chemical characteristics and administrative controls. Any chemicals that historically could have been used would have volatilized and would no longer be present. Currently, administrative controls limit the introduction of chemicals in the basin water, including administrative procedure OP-2-025-01, "Basin Water Quality Control," Section 6.4, "Review of Chemical Products Used in the Basins" (FH 2000). Prior to their use in the basin areas, Operations support personnel review all chemical products that have the potential to leak or spill into the basins. They do this to determine if there would be potential adverse effects. Operations support personnel also approve all chemical products that are used in construction, maintenance, and operational activities to ensure that they will not adversely impact basin water chemistry. Because no volatile organics are present in the basins, volatile organic analysis and semi-volatile organic analysis will not be required to characterize the waste.

The LWPF require that the water be filtered through a 5 micron filter to avoid accumulation of solids in the tanker truck and the LERF Basins. To ensure the KE Basin meets this acceptance criterion, a 5 micron filter was constructed in the transfer line to the tanker truck. When water is ready to be transferred to the tanker, valves will be opened to allow the water to flow through the 5 micron filter. Sampling for total suspended solids will not be required to characterize the waste.

2.5 PARAMETERS AND/OR CONSTITUENTS OF CONCERN TO COMPLETE CHARACTERIZATION

The constituents of concern were determined by comparing the preliminary set of KE Basin water analysis results to the LWPF waste acceptance criteria. All radionuclides were less than 10% of the most stringent radionuclide waste acceptance criteria (the LERF source term limits). The total organic carbon was less than the quantification limit, confirming that there is little or no organic material in the water. The metal species were also very low. All the PCB analyses were below the quantification limit; however, additional PCB data are needed to confirm that the KE Basin water meets the LERF/ETF acceptance criteria.

Based on these results, further characterization sampling will consist of the constituents in Table 4. Sampling frequency is defined in Section 2.7.

Table 4. Constituents of Concern.

Constituents	Rationale
^{3}H	Tritium is a major contributor to overall curie content
^{60}Co, ^{137}Cs	Significant gamma emitters
^{90}Sr	Significant beta emitter
^{237}Np, ^{238}Pu, $^{239/240}Pu$, ^{241}Pu, ^{241}Am	Significant alpha emitters
PCBs—Aroclors 1016/1242, 1221, 1232, 1248, 1254, and 1260	Confirm process knowledge.

PCB = polychlorinated biphenyl

2.6 DECISION RULE

The decision will be made on the following basis.

If the concentration of constituents in the KE Basin meets the LERF/ETF waste acceptance criteria, the waste is acceptable for transfer to LERF/ETF. The waste acceptance process evaluates the waste against the following criteria.

- Is filtration required to remove solids present in the waste?
- Is the waste compatible with the LERF/ETF materials of construction?
- Are the concentrations of the constituents in the waste within the limits in the approved influent constituent list required by *State Waste Discharge Permit Number ST 4500* (ST 4500)?
- Are the concentrations and quantities of radionuclides in the waste within the limits in LERF/ETF safety documentation?

- Are the concentrations and quantities of radionuclides and toxic chemicals in the waste within the limits of air emission documents?

- If the waste is designated as dangerous waste, are the waste codes included in Ecology 94-05-001, *Dangerous Waste Portion of the Resource Conservation and Recovery Act Permit for the Treatment, Storage, and Disposal of Dangerous Waste*, Permit No. WA7890008967?

- Is the powder generated at ETF from treating water approved for disposal at the Environmental Restoration Disposal Facility (ERDF)?

Further information about waste acceptance at the LERF/ETF is available in HNF-3172. Several of the criteria involve evaluating the KE Basin waste in conjunction with other wastes received at LERF/ETF. For example, air emissions requirements limit the annual throughput of radionuclides at LERF and ETF, so all radionuclides from all waste streams for the year must be considered in the evaluation.

The PCB concentration in the water will determine the management policy. If the PCB concentration in the water is less than 0.5 μg/L, it is not *Toxic Substances Control Act of 1976* (TSCA)-regulated waste, and the water is acceptable for unrestricted disposal at ETF. If the PCB concentration is greater than 0.5 μg/L, the water will be classified as PCB remediation waste. In addition, if the PCB concentration in the water is less than 150 μg/L, the water is acceptable for storage at LERF. The LERF/ETF limits may be re-evaluated at such time that ETF receives approval from EPA to treat PCB remediation waste. If all the Aroclors are less than the Practical Quantitation Limit (PQL) defined in Table 1, the value of the highest PQL will be used to represent the total PCB concentration. If any Aroclors are reported above their respective PQL, the sum of all the detected Aroclors will be used to represent the total PCB concentration.

The powder generated at ETF from treating KE Basin water will be disposed of at ERDF if (1) it meets the ERDF waste acceptance criteria; (2) the K Basins water is not combined with other liquid effluent whose treatment residue is not authorized for ERDF disposal; and (3) the residue from treatment of K Basins water is not combined with waste that is not authorized for ERDF disposal.

2.7 SAMPLE COLLECTION STRATEGY

One representative sample has been taken from KE Basin IXM Outlet Number 3 using auto sampler AS-18. It is expected that, given the consistency of process sample results, additional samples will give similar results. The results of the preliminary sampling show the water is acceptable for receipt at LERF/ETF and water transfers can begin immediately following LWPF approval. A second sample of the IXM outlet water will be analyzed for the constituents in Table 4 to confirm the water is of similar quality and is adequately characterized. The second sampling will occur at least 30 days after the initial sampling. An evaluation of the results will be used to determine if additional sampling is required.

Process control sample results for Total Alpha and ^{137}Cs will be routinely evaluated to determine if any significant changes in water quality have occurred. If a significant change in water quality

should occur, the constituents of concern will be determined and additional sampling and analysis will be performed. At a minimum, this re-evaluation will occur prior to KE Basin water removal associated with deactivation.

2.8 REVIEW OF SAMPLE COLLECTION DESIGN

Sample results from the IXM outlets, including monthly process sample results, will be provided to the SNF Project, WMP Waste Services, and WMP LWPF personnel. Any shifts/trends will be evaluated to determine if expansion or modification of the constituents of concern is required.

The LERF/ETF *Resource Conservation and Recovery Act of 1976* (RCRA) permit requires reevaluation of the waste if LWPF believes the waste process has changed. Reevaluation of required sampling and analysis will occur if any significant change should occur in the KE Basin processes that could affect water quality.

3.0 PROJECT RESPONSIBILITIES AND POINTS OF CONTACT

This section establishes roles and responsibilities for the sampling and analysis effort.

3.1 PROJECT MANAGER

The project manager is designated by the SNF Project Director, Project Support and has the following responsibilities under this SAP.

- Provide resources to complete activities defined by this SAP.
- Resolve any questions or problems communicated by the sampling coordinator.
- Document and resolve deviations from this SAP.

3.2 SAMPLING COORDINATOR

The sampling coordinator is designated by the project manager and has the following responsibilities under this SAP.

- Ensure that sampling activities, including documentation and transportation to the laboratory, are performed in accordance with this SAP.

- Address any questions regarding this SAP to the project manager prior to beginning sampling activities.

- Maintain the primary interface with SNF, analytical laboratory, and the LWPF.

- Notify the project manager of any deviations from this SAP that affect the data quality as soon as possible for resolution.
- Transmit laboratory data to all data users.

3.3 ANALYTICAL LABORATORY

The analytical laboratory contracted by the SNF Project has the following responsibilities under this SAP.

- Receive and log in samples.
- Analyze samples by the methods specified by this SAP and any specific client agreement, including meeting specified holding times.
- Address any questions regarding the analyses to the sampling coordinator as soon as possible for resolution.
- Dispose of any unused sample.

4.0 SAMPLING METHODS AND REQUIREMENTS

This section describes the methods for obtaining representative samples and the applicable documentation and quality control requirements.

4.1 COLLECTION OF SAMPLES

The SNF Project operations personnel will manage sampling activities. The DFSNW sampling organization will perform the sampling. DFSNW will direct sampling in accordance with DFSNW-SSPM-001, *Sampling Services Procedure Manual*, procedure SP 7-1, "Drum Sampling/Containerized Material Sampling." Alternatively, another contractor with equivalent procedures may be utilized. A representative sample will be obtained using the sample collection strategy described below.

The KE Basin water system is described in HNF-SD-WM-SAR-062, *K Basins Safety Analysis Report*. A schematic showing the sampling points is included in Figure 2.

The KE Basin water system has three different areas for sampling water prior to the water being transferred to the tanker truck. Auto sampler AS-16 samples water from IXM Outlet #1, auto sampler AS-17 samples water from IXM Outlet #2, and auto sampler AS-18 samples water from IXM Outlet #3. The sample will be taken from the operating IXM.

4.2 QUALITY CONTROL SAMPLES

As a minimum, a quality assurance/quality control field duplicate will be sent to the laboratory for each IXM system sampling campaign and whenever rebaselining or verification is necessary.

4.3 EQUIPMENT, SAMPLE CONTAINERS, AND SAMPLE PRESERVATION

DFSNW, or other approved contractor will provide sample collection materials (i.e., containers, labels, tools, etc.). Sample bottle requirements are specified in Table 1. All containers, except those used for radiochemical analysis, must be Level-1 protocol per manufacturer for RCRA samples. Sample equipment must be new or cleaned in accordance with DFSNW-SSPM-001, procedure SP 2-5, "Laboratory Cleaning of Sampling Equipment," or equivalent procedure.

Samples must be preserved as specified in Table 1. Samples shall be submitted to the laboratory promptly to meet holding times. The laboratory will be provided 24-hour advance notification of the sampling schedule whenever possible.

4.4 SAMPLE IDENTIFICATION AND CHAIN OF CUSTODY

The sampling organization will manage the samples in accordance with WMP-200, *Fluor Hanford Waste Management Project Procedures*, Section 3.12, "Chain of Custody for Environmental Media and Waste Samples," or equivalent procedure, and DFSNW-SSPM-001, procedure SP 1-1, "Chain of Custody," or equivalent procedure.

The sample collection organization will be responsible for initiating and maintaining the chain of custody from the time of sampling until transfer of custody. All samples will include a sample-screening vial that contains a representative portion of the sample for radiological screening.

4.5 DOCUMENTATION

A record of the sampling activities will be documented in a bound, sequentially numbered field logbook. The logbook will describe the general location of the sampling activity, type (matrix) of material sampled, sample method, sample source, sample number (corresponding to the sample label), date and time of sample collection, and any problems encountered or deviations from this SAP. Field-generated notes will be attached (e.g., taped) to the field logbook. Drawings, diagrams, and photographs should be used when needed to clearly describe the sampling event. Each page in the logbook will be signed and dated by the person making the logbook entry.

Any field measurements (e.g., radiological surveys, industrial hygiene survey measurements) will be documented and maintained by the SNF Project.

On completion of the sampling project, a photocopy of the chain of custody form(s) and field logbook pages pertaining to the sampling activity will be provided to the sampling coordinator.

4.6 PROBLEMS OR DEVIATIONS FROM SAMPLING PROCEDURES

Any problems encountered during sampling or deviations from this SAP must be documented in the field logbook and communicated to the sampling coordinator as quickly as possible. Where a problem or deviation could affect the usability of the data, the sampling coordinator will contact the project manager to determine the appropriate action to be taken (e.g., discontinue sampling, modify the sampling procedure, or continue sampling). Any deviations from this SAP will be documented in a form for which EPA review and approval can be obtained.

5.0 SAMPLE ANALYSIS METHODS AND REQUIREMENTS

This section describes sample analysis methods and requirements for the selected laboratory. Client agreements will be used with the laboratory as necessary to establish any laboratory-specific requirements.

5.1 LABORATORY

The Waste Sampling and Characterization Facility is currently the laboratory contracted to perform the required analysis. An alternate laboratory may be used provided that the laboratory has an approved Quality Assurance program that is based on and meets the requirements of DOE/RL 96-68, *Hanford Analytical Services Quality Assurance Requirements Document.*

5.2 ANALYSIS METHODS AND HOLDING TIMES

Samples shall be analyzed by the methods identified in Table 1. The laboratory shall meet the holding times specified in Table 1.

5.3 QUALITY CONTROL

The contracted laboratory will conduct all sample analyses utilizing the EPA or Washington Department of Ecology accepted quality control practices. An approved Quality Assurance Program Plan must be in place that is based on and implements the requirements of DOE/RL-96-68.

5.4 ANALYSIS REPORT

The laboratory shall provide the final analysis report within 30 calendar days from samples arriving at the laboratory, unless a quicker turnaround is negotiated on a case-by-case basis. Data will be qualified in the narrative or by using standard laboratory data qualifiers.

5.5 PROBLEMS OR DEVIATIONS FROM ANALYSIS METHODS

Any problems during analysis or deviations from the analysis method, including holding time requirements, must be communicated to the sampling coordinator as quickly as possible. The analytical laboratory contact shall contact the sampling coordinator to determine the appropriate action to be taken (e.g., discontinue analysis, use an alternate procedure, continue analysis despite problems). Problems or deviations and actions taken will be documented and provided to the sampling coordinator. Any deviations from this SAP will be documented in a form for which EPA review and approval can be obtained.

5.6 UNUSED SAMPLE PORTIONS

All unused portions of samples will be disposed of by the laboratory staff after the final results have been reviewed and accepted by the sampling coordinator and LWPF.

6.0 DATA EVALUATION

The SNF Project and WMP Waste Services will evaluate the data collected under this SAP and complete the ETF waste profile based on the results. Analysis results will be forwarded to the WMP LWPF. The LWPF acceptance personnel will evaluate the data collected under this SAP

to ensure that the LERF/ETF waste acceptance criteria are met and give final approval for acceptance of the waste stream.

7.0 RECORDS

All records generated during this sampling and analysis campaign (e.g., field notes, radiological surveys) will be managed per project Records Inventory Disposition Schedule.

8.0 REFERENCES

01-SFO-051, 2001, *Completion of Waste Designation for K Basin Sludge Waste Streams*, (letter to D. R. Sherwood, EPA and M. A. Wilson, WDOE, March 27), U.S. Department of Energy, Richland Operations Office, Richland, Washington.

DFSNW-SSPM-001, *Sampling Services Procedure Manual*, Duratek Federal Services, Inc., Northwest Operations, Richland, Washington.
SP 1-1, "Chain of Custody"
SP 2-5, "Laboratory Cleaning of Sampling Equipment"
SP 7-1, "Drum Sampling/Containerized Material Sampling"

DOE/RL-96-68, 1996, *Hanford Analytical Services Quality Assurance Requirements Documents*, U.S. Department of Energy, Richland Operations Office, Richland, Washington.

DOE/RL-99-89, 2001, *Remedial Design Report and Remedial Action Work Plan for the K Basins Interim Remedial Action*, Rev. 1, U.S. Department of Energy, Richland Operations Office, Richland, Washington.

Ecology 94-05-001, 2001, *Dangerous Waste Portion of the Resource Conservation and Recovery Act Permit for the Treatment, Storage, and Disposal of Dangerous Waste*, Permit No. WA7890008967, Rev. 7, Washington State Department of Ecology, Kennewick, Washington.

FH, 2000, *Spent Nuclear Fuel Project Administrative Procedure*, OP-2-025-01 "Basin Water Quality Control," Fluor Hanford, Inc., Richland, Washington.

FH-0100738, 2001, *Completion of Waste Designation for K Basin Sludge Waste Streams*, (letter to P. G. Loscoe, RL, February 7), Fluor Hanford, Inc., Richland, Washington.

HNF-1728, 1998, *Analysis of Sludge from Hanford K West Basin Canisters*, Rev. 0, Fluor Hanford, Inc., Richland, Washington.

HNF-3172, 2001, *Liquid Waste Processing Facilities Waste Acceptance Criteria*, Rev. 1, Fluor Hanford, Inc., Richland, Washington.

HNF-6495, 2001, *Sampling and Analysis Plan for K Basins' Debris*, Rev. 1, Fluor Hanford, Inc., Richland, Washington.

HNF-SD-WM-SAR-062, 2000, *K Basins Safety Analysis Report*, Rev. 5, Fluor Hanford, Inc., Richland, Washington.

HNF-SP-1201, 1997, *Analysis of Sludge from Hanford K East Basin Canisters*, Rev. 0, DE&S Hanford, Inc., Richland, Washington.

RCRA, *Resource Conservation and Recovery Act of 1976*, 42 USC 6901 et seq.

ST 4500, 2000, *State Waste Discharge Permit Number ST 4500*, State of Washington Department of Ecology, Kennewick, Washington.

TSCA, *Toxic Substances Control Act of 1976*, 15 USC 2601 et seq.

WAC 173-303, "Dangerous Waste Regulations," *Washington Administrative Code*, as amended.

WMP-200, *Fluor Hanford Waste Management Project Procedures*, Section 3.12, "Chain of Custody for Environmental Media and Waste Samples," Rev. 2, Waste Management Project, Richland, Washington.