START 96134 0044079

DOE/RW-0479

Analysis of the Total System Life Cycle Cost of the Civilian Radioactive Waste Management Program

MAY 1996
RECEIVED
EDMC

U.S. DEPARTMENT OF ENERGY
OFFICE OF CIVILIAN RADIOACTIVE WASTE MANAGEMENT

SEPTEMBER 1995

9613441.0559

This publication was produced by the U.S. Department of Energy's Office of Civilian Radioactive Waste Management (OCRWM).

For further information, contact:

Office of Civilian Radioactive Waste
Management National Information Center
600 Maryland Ave., S.W., Suite 760
Washington, DC 20024

or call:

1-800-225-NWPA (6972)
Washington, DC: 202-488-6720

961344

Steve Schaus
372-114
1981 Snyder/412

DOE/RW-0479

Analysis of the Total System Life Cycle Cost of the Civilian Radioactive Waste Management Program

U.S. DEPARTMENT OF ENERGY
OFFICE OF CIVILIAN RADIOACTIVE WASTE MANAGEMENT
WASHINGTON, D.C 20585

SEPTEMBER 1995

Printed with soy ink on recycled paper

9613441.0561

LETTER FROM THE DIRECTOR

Attached is the Analysis of the Total System Life Cycle Cost of the Civilian Radioactive Waste Management Program, dated August 1995. This report documents the total system life cycle cost of one concept for the Civilian Radioactive Waste Management System. The concept examined was a surrogate single repository system using Multi-Purpose Canisters without interim storage. The estimate for this system was $33.1 billion in constant 1994 dollars. The closest comparable system examined in the 1990 TSLCC was a single repository system which included a monitored retrievable storage facility, but which did not include Multi-Purpose Canisters. The estimate for this system in the 1990 TSLCC was $30.3 billion when converted to 1994 dollars.

The concept and the location of the repository at Yucca Mountain should be viewed as surrogates for the system that ultimately develops. It does not constitute a predecision by DOE that Yucca Mountain has been found to be a suitable location for a repository.

In order to conduct the cost analysis, numerous assumptions were required for system components and operational procedures where decisions have not yet been made. These assumptions could greatly influence the resulting cost estimate. The estimates in this report will be updated periodically to reflect the most current information available at the time of the estimate.

Sincerely,

Daniel A. Dreyfus, Director
Office of Civilian Radioactive
Waste Management

9613441.0562

TABLE OF CONTENTS

Page

1. INTRODUCTION AND SUMMARY 1
   - 1.1 Purpose and Scope 1
   - 1.2 Summary of Results and Conclusions 2
   - 1.3 System Description 5
   - 1.4 Program Assumptions 7
   - 1.5 Repository Assumptions 7
   - 1.6 WAST Assumptions 7
   - 1.7 Costing Approach 9
   - 1.8 Overview 10

2. REPOSITORY COSTS 13
   - 2.1 Development and Evaluation Phase 17
   - 2.2 Engineering and Construction Phase 18
   - 2.3 Emplacement Operations Phase 18
   - 2.4 Caretaker Operations Phase 19
   - 2.5 Closure and Decommissioning Phase 19

3. WASTE ACCEPTANCE, STORAGE & TRANSPORTATION COSTS 21
   - 3.1 Transportation 21
   - 3.2 Waste Acceptance 24
   - 3.3 Storage (MRS Facility) Development and Evaluation 26
   - 3.4 Multi-Purpose Canister Subsystem 26
   - 3.5 WAST Project Management & Integration D&E 28

4. OTHER DEVELOPMENT AND EVALUATION COSTS 31
   - 4.1 Systems and Compliance 31
   - 4.2 Quality Assurance 32
   - 4.3 Program Management 32
   - 4.4 Second Repository 32
   - 4.5 Nuclear Regulatory Commission Fees 32
   - 4.6 Nuclear Waste Technical Review Board 33
   - 4.7 Nuclear Waste Negotiator 33

5. PAYMENTS EQUAL TO TAXES 35

6. BENEFITS 37

7. CIVILIAN AND DEFENSE ALLOCATION 39

8. REFERENCES 41

APPENDIX A 1995 Total System Life Cycle Cost Estimate Summary 43

APPENDIX B Cost Comparison with 1990 TSLCC Addendum 49

APPENDIX C Annual Cost Profile 59

APPENDIX D List of Acronyms 63

9613441.0563

LIST OF FIGURES

Page

1-1 Cost Summary for the CRWMS 4
1-2 Primary Waste Flow to Repository 6
2-1 Repository Surface Facilities 14
2-2 Repository Subsurface Facilities 15
2-3 Conceptual Waste Package for the MPC 16
3-1 Conceptual System MPC Transportation Cask 23
3-2 Conceptual MPC Components 27
C-1 Annual Cost Profile 62

LIST OF TABLES

Page

1-1 Summary of TSLCC 1995 3
1-2 MGDS Receipt/Emplacement Rates 8
2-1 Total Repository Cost 17
2-2 Repository Development and Evaluation Cost Summary 18
2-3 Repository Engineering and Construction Cost 18
2-4 Repository Emplacement Operations Cost 19
2-5 Repository Caretaker Operations Cost 19
2-6 Repository Closure and Decommissioning Cost 19
3-1 Summary of Waste Acceptance, Storage & Transportation Cost 21
3-2 Transportation Development and Evaluation Cost Summary 22
3-3 Transportation Operations Cost 22
3-4 Waste Acceptance Development and Evaluation Cost Summary 24
3-5 Waste Acceptance Operations Cost 25
3-6 Storage (MRS Facility) Development and Evaluation Cost Summary 26
3-7 MPC Development and Evaluation Cost Summary 27
3-8 MPC Operations Cost 28
3-9 PM&I Development and Evaluation Cost Summary 29
4-1 Other Development and Evaluation Cost Summary 31
5-1 PETT Cost Summary 36
6-1 Benefits Cost Summary 37
7-1 Summary of Civilian, Defense, and West Valley Allocation 39
A-1 1995 Total System Life Cycle Cost Estimate Summary 46
B-1 TSLCC 1990 and TSLCC 1995 Comparison 52
B-2 Differences Between the 1990 and 1995 TSLCC 56
C-1 Annual Cost Profile 61

1. INTRODUCTION AND SUMMARY

1.1 Purpose and Scope

This report documents the findings of a comprehensive analysis of the total system life cycle cost (TSLCC) of one concept for the Civilian Radioactive Waste Management System (CRWMS). Its purpose is to provide a cost estimate to aid in financial planning, to provide policy makers information to use in determining the course of the program, and to provide a system cost estimate as one of the inputs for assessing the adequacy of fees being paid by waste generating sources. The scope of the concept reflects one approach to waste management based on the program's most current plans, strategies, and policies [References 1-3]. However, since this estimate spans almost 90 years, the concept should be viewed as a surrogate to the system that will ultimately be developed.

Numerous scenarios could have been selected for cost analysis. The scenario used in this analysis is a one-repository system without interim storage. Yucca Mountain was assumed as the location for the repository since it is the only one that the Department is authorized by law to characterize, but this does not constitute a predecision on the determination of Yucca Mountain as an acceptable site for the repository. The final repository may not actually be located at Yucca Mountain. We are aware of current legislation which prohibits emplacement in the first repository of a quantity of spent fuel containing in excess of 70,000 metric tons of heavy metal or a quantity of solidified high level radioactive waste resulting from the reprocessing of such a quantity of spent fuel until such time as a second repository is in operation. Previous TSLCC analyses have also costed a two-repository system with interim storage (Monitored Retrievable Storage) and varying quantities of spent nuclear fuel. However, there is no advantage in estimating costs for additional scenarios including a two-repository system with interim storage since we do not have current cost information or designs for a second repository and interim storage.

In order to conduct the cost analysis, numerous assumptions were required for system components and operational procedures where decisions have not yet been made. It is well understood that assumptions are critical to the resulting cost estimate. Changes in assumptions could greatly influence the resulting estimate, either upward or downward. Assumptions forming a basis for this TSLCC are described in the remainder of Section 1.

This TSLCC estimate should not be interpreted as a final estimate. It is a snapshot at this time based upon numerous assumptions. Nor should the assumptions used in this analysis be interpreted as Office of Civilian Radioactive Waste Management (OCRWM) or Department of Energy (DOE) policy. The program is in the early stages of development and design concepts for items such as the repository surface facility, underground layouts, and waste packages are very preliminary. The techniques used to estimate the total system cost are appropriate to this limited level of design development and entail a corresponding level of uncertainty.

This TSLCC report is not a fee adequacy report. Fee adequacy depends on other data and assumptions about funding and revenues, interest and inflation rates, as well as annual expenditure

profiles. This TSLCC analysis provides one input, a cost basis, to the fee adequacy analysis. This study represents a reasonable estimate of total system costs, and forms a rational basis for assessment of the adequacy of funding and projected revenues to determine fee adequacy. Funding comes from the Nuclear Waste Fund (NWF) for commercial spent nuclear fuel and from the Defense Nuclear Waste Disposal appropriation for defense high level waste (HLW). The results contained in the TSLCC will be used in an upcoming fee adequacy analysis to determine whether fees being paid by waste generating sources are sufficient to fund the program throughout its entire life cycle.

1.2 Summary of Results and Conclusions

This report summarizes the current life cycle cost estimate for management and disposal of the nation's spent nuclear fuel (SNF) and high level radioactive waste as it is being undertaken by OCRWM in DOE.

Our national strategy maintains a clear focus on the long-term objective of waste disposal in a geologic repository. The immediate challenge is to provide for the timely acceptance and safe interim storage of SNF from the nation's commercial reactors. In order to accomplish these objectives, the program was restructured in 1994. The program is organized with two "business centers", the Yucca Mountain Site Characterization Project, and the Waste Acceptance, Storage and Transportation (WAST) Project, along with a management center that provides integration and management support to the Director of OCRWM and the projects. Program and project activities were reviewed and focused on near-term interim milestones, leading to planned acceptance and emplacement of SNF in a geologic repository beginning in 2010. The Program Approach is described in detail in the Civilian Radioactive Waste Management Plan, Volumes I - III, published December 19, 1994 [References 1-3].

The total estimated future cost to complete the program is $28.2 billion, in constant 1994 dollars. A total of $4.2 billion was spent through 1994 in Year of Expenditure (YOE) dollars. Escalating historical expenditures to 1994 constant year dollars ($4.9 billion), plus the cost to complete of $28.2 billion dollars, results in a total system life cycle cost estimate for the CRWMS of $33.1 billion dollars (94$s). A summary of major cost categories is presented in Table 1-1. These costs are presented in more detail in Appendix A. These costs are represented in terms of areas of work scope over the life of the program in Figure 1-1. The figure represents historical costs, both in YOE and constant 1994 dollars, and all future costs in constant 1994 dollars. The program is assumed to run from its inception in 1983 through closure and decommissioning of the repository in 2071. Major program milestones are depicted along the bottom axis of the chart. The report that follows details each major category and the key assumptions related to its cost estimation.

This estimate is based on acceptance and disposal of about 84,000 Metric Tons of Uranium (MTU) of SNF (about 290,000 assemblies) and about 18,000 canisters of vitrified HLW. Logistics costs, such as shipping and the acquisition of waste canisters and transportation overpacks, are modeled from waste stream data based on the Annual Capacity Report (ACR) [Reference 4], published by DOE pursuant to the Nuclear Waste Policy Act Amendment of 1987 (NWPAA) [Reference 5]. Quantities of SNF are based on the Energy Information Administration (EIA) No New

Table 1-1 Summary of TSLCC 1995
(in Millions of 1994 Dollars)

Cost Category	Total Cost
Repository	18,764
Waste Acceptance, Storage & Transportation	10,094
Other Development & Evaluation	3,513
Payments Equal to Taxes (PETT) [1]	308
Benefits	417
Total [2]	$33,096

[1] An additional $38 million of PETT is included in the Repository cost category (work breakdown structure element 1.2.10).
[2] Total may not add due to rounding.

Orders case [References 5-6], adjusted for reactor cancellations in late 1994, and encompass the SNF inventory from all commercial U.S. reactors. Waste stream modeling assumes pickup of Oldest-Fuel-First, with priority allocations in accordance with the ACR. Estimated quantities of HLW are based on the Department of Energy's Integrated Data Base [Reference 6]. While little additional HLW is expected to be generated at DOE sites in the future, quantities of HLW canisters may vary due to uncertainties in the planned processing and vitrification of the wastes.

Near term (1995-2000) costs reflect detailed estimates of work scope defined in the CRWMS Program Plan, [References 1-3]. Beyond the year 2000, costs reflect project estimates for additional site characterization, repository design, construction, operation, caretaking, closure and decommissioning; and development and operation of a transportation and storage system for SNF and HLW. Estimates reflect the Program Approach and conceptual design data for emplacing robust waste packages in an engineered geological repository.

This 1995 TSLCC estimate provides a snapshot of the total system cost to implement the program approach. It represents the best judgement of total costs for a scenario selected by DOE management to satisfy the long-term objective of waste disposal in a geologic repository. It also reflects the recent restructuring of program and project activities to focus on near-term interim milestones, leading to planned acceptance and emplacement of spent nuclear fuel in a geologic repository beginning in 2010. As a necessity, this estimate makes assumptions for decisions that have not yet been made. It assumes technical findings of site suitability, and results of technical investigations that will not be complete for several years. The assumptions utilized to develop this estimate are generally consistent with the Program Approach.

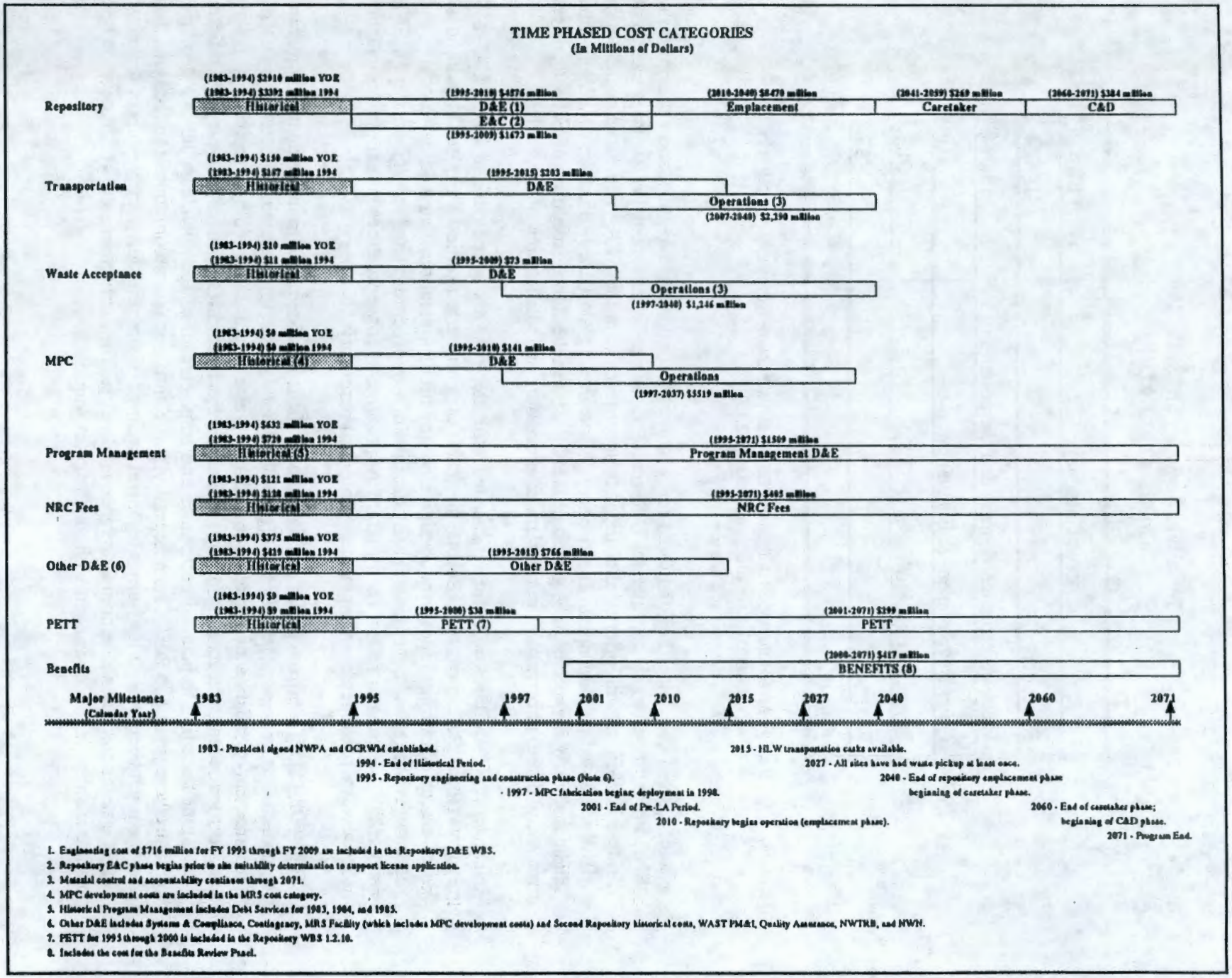

1. Engineering cost of $716 million for FY 1995 through FY 2009 are included in the Repository D&E WBS.
2. Repository E&C phase begins prior to site suitability determination to support license application.
3. Material control and accountability continues through 2071.
4. MPC development costs are included in the MRS cost category.
5. Historical Program Management includes Debt Services for 1983, 1984, and 1985.
6. Other D&E includes Systems & Compliance, Contingency, MRS Facility (which includes MPC development costs) and Second Repository historical costs, WAST PM&I, Quality Assurance, NWTRB, and NWN.
7. PETT for 1995 through 2000 is included in the Repository WBS 1.2.10.
8. Includes the cost for the Benefits Review Panel.

Figure 1-1 Cost Summary for the CRWMS

1.3 System Description

The mission of the CRWMS is to manage and dispose of the nation's SNF and HLW in a manner that protects the health and safety of the public and workers, while protecting the quality of the environment. The functions to be performed by the system are: accept, transport, store, and dispose of waste. Figure 1-2 shows how the SNF and HLW flow through the system [Reference 7]. The CRWMS architecture includes three components: Mined Geologic Disposal System (MGDS); Waste Acceptance, Storage and Transportation System; and Program Management.

The repository will be a system of engineered and geologic barriers for the permanent disposal of SNF and HLW. The MGDS, as addressed in this document, will consist of a single repository. The MGDS concept contains an Exploratory Studies Facility (ESF) that includes both an underground test facility and surface support facilities. The ESF supports the site characterization program that will establish whether the proposed repository site is suitable. ESF construction is proceeding with guidelines to ensure that safety and waste isolation of the potential repository will not be adversely affected. The repository Advanced Conceptual Design is being developed concurrently with the ESF. The Yucca Mountain site, located at the Nevada Test Site, approximately 100 miles northwest of Las Vegas, Nevada, is being characterized to evaluate whether it is suitable for the repository. Yucca Mountain will not be designated as the site for the repository unless such suitability is formally determined. Further, the OCRWM is currently prohibited by the NWPAA from any technical efforts directed toward characterization or development of a site for a second repository.

The WAST system includes Storage, Transportation, Waste Acceptance, Multi-Purpose Canister (MPC) subsystem, and WAST Project Management & Integration. Waste Acceptance is responsible for taking title and physical possession of waste at the owners' sites. It provides the interface with utilities as well as HLW sites. Waste Acceptance must be completed before waste can be transported to CRWMS facilities.

This analysis does not include costs for at-reactor storage. Previous TSLCC analyses have assumed interim centralized storage at a Monitored Retrievable Storage (MRS) facility. This analysis does not assume centralized interim storage.

The MPC subsystem consists of standardized canisters for SNF that, after loading, are either sent immediately to the MGDS or placed in at-reactor dry storage facilities. MPCs are loaded with multiple spent fuel assemblies and sealed at utility sites, then handled as a single unit throughout the waste management cycle. Temporary on-site storage costs are borne by utilities as DOE does not take possession of the wastes until acceptance for transportation to the repository.

Transportation is concerned with the movement of SNF and HLW from utilities and HLW sites to the repository. MPCs and canisters of HLW are transported, primarily by rail, in transportation casks that provide additional shielding and ensure the safety and physical integrity of the package. The

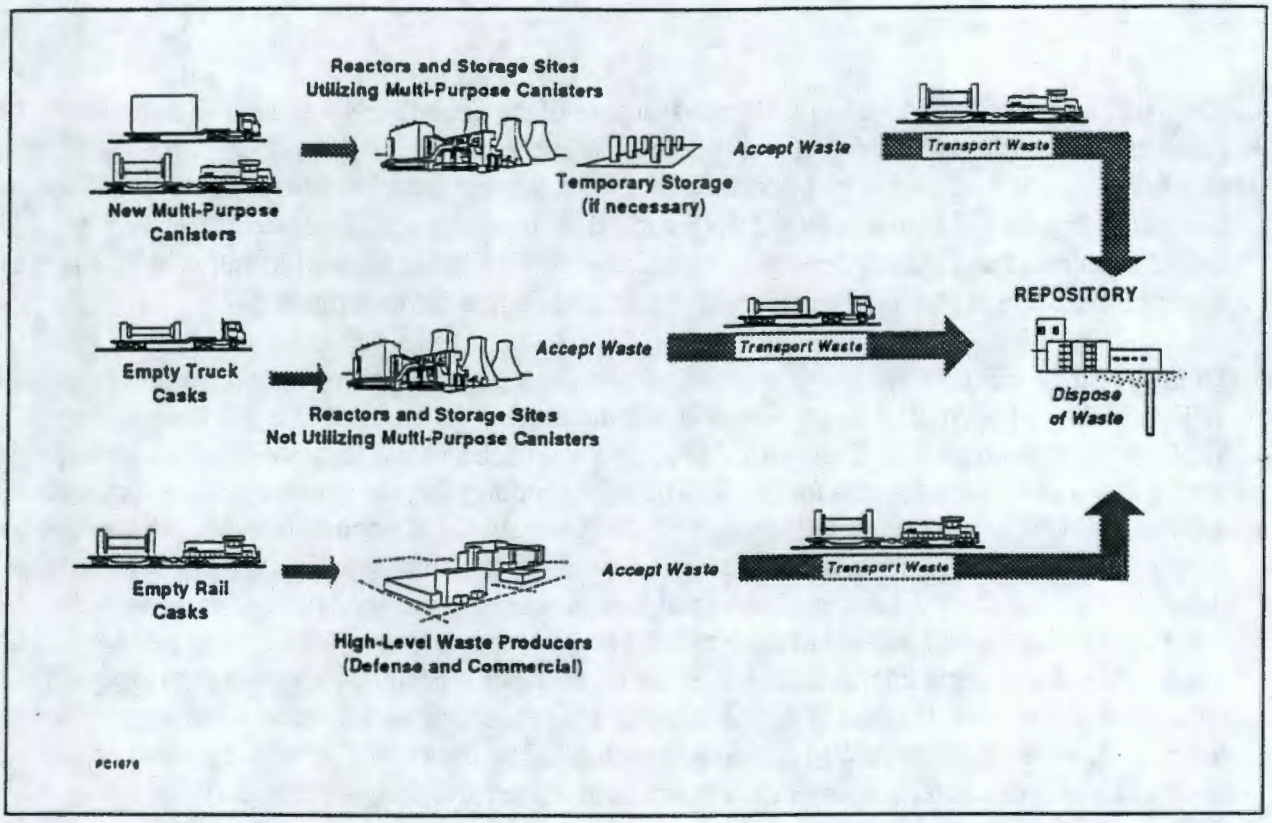

Figure 1-2 Primary Waste Flow to Repository

estimate includes the cost of acquisition of General Atomics Corp. GA-4 and GA-9 truck casks, large and small MPC rail casks, and HLW rail casks, in addition to shipping and transportation management costs.

WAST Project Management & Integration is responsible for project management, systems engineering, technology demonstration, quality compliance, and environmental safety and health activities related to acceptance, storage, and transportation of SNF and HLW.

Program Management is responsible for the overall waste management system, including Quality Assurance (QA), systems integration and compliance, and program management. QA products include planning documents, program-level QA requirements and descriptions, QA control, procedures, audits, and surveillance documentation. Systems integration and compliance ensures that the CRWMS program is integrated and compliant with regulatory and technical requirements. Other program management functions include strategic planning, international waste management technology, external relations, program control and administration, human resource activities, information management, contract business management, and repository support.

1.4 Program Assumptions

The TSLCC cost analysis, as stated earlier, is based on the Program Approach [References 1-3]. Any deviations from the Program Approach are noted.

1.5 Repository Assumptions

This analysis assumes, for cost estimating purposes, a single repository scenario with Yucca Mountain as a surrogate site, adequate to store all planned SNF and HLW in a single repository. The NWPAA [Reference 5] specifies that the need for a second repository will be assessed between 2007 and 2010.

The Program Approach assumes horizontal drifts and in-drift emplacement of large waste packages. The repository operation assumes costs for only fifty years, based on the assumption that all open issues at the time of emplacement startup will be resolved within the first fifty years. However, all structures will be designed not to preclude a future decision to extend retrievability to a 100 year period should a need for additional repository performance evaluation be determined. Operations are followed by closure and decommissioning in the period 2060 through 2071.

It is assumed that a technical site suitability evaluation and repository draft environmental impact statement are completed for the Yucca Mountain site during 1998. The current Program Approach projects the areal loading of waste at approximately 100 MTU/acre (24.7 kilogram Uranium/m^2). For purposes of this estimate it is assumed that the MGDS will be granted a high thermal loading license prior to waste package procurement and emplacement operations. Variation from these milestone events and assumptions would impact the repository and Development and Evaluation (D&E) costs. Emplacement rates at the MGDS were assumed to be the same as the rate at which the repository receives waste. These rates are shown in Table 1-2.

1.6 WAST Assumptions

As a basis for planning, OCRWM uses the no-new-orders, end of reactor life case [References 6-7] prepared by DOE's EIA. SNF pickup is assumed to begin in 2010, and HLW pickup is assumed to begin in 2015. Fuel pickup allocation assumes oldest fuel is picked up first, in accordance with the ACR and agreements with the utilities. HLW included in the TSLCC analysis is limited to current projections of vitrified tank wastes from Hanford, Savannah River, Idaho National Engineering Laboratory, and the West Valley Demonstration Project [Reference 6]. HLW vitrification costs are not included.

The Program Approach assumes that all SNF is stored at utility sites prior to being transported to the MGDS. No MRS or interim storage facility costs, or storage costs at utility sites are included in this TSLCC analysis. The capital and operating costs (excluding personnel) of the Cask Maintenance Facility, previously included in transportation estimates, are included in the repository surface facility estimates.

Table 1-2 MGDS Receipt/Emplacement Rates

Year	MGDS Receipt/Emplacement Rate (MTU SNF, Canisters of HLW)
2010	300 MTU SNF
2011	600 MTU SNF
2012	1,200 MTU SNF
2013	2,000 MTU SNF
2014	3,000 MTU SNF
2015 - 2037	3,000 MTU SNF + 750 HLW Canisters
2038	3,000 MTU SNF + 175 HLW Canisters
2039	3,000 MTU SNF + 345 HLW Canisters
2040	1,854 MTU SNF + 576 HLW Canisters

The acquisition costs of MPCs provided to utilities are included. Costs for deliveries of MPCs also are included, commencing in 1998 in accordance with the schedules in the ACR [Reference 4]. Full burnup credit is assumed for transportation and long-term storage for all MPCs. The capital costs for welding equipment and on-site transfer equipment required to support MPC use are included in the estimate. MPC loading expenses and costs of any materials and equipment required for criticality control are incurred by the utilities and are not included in the estimate. Capital costs for on-site storage, and all operations costs for on-site storage and transfer are borne by the utilities. All fuel stored in existing dry storage systems is loaded into MPCs or legal weight truck casks prior to acceptance at utility expense.

For the purpose of TSLCC analysis, all SNF rail shipments from reactors are assumed to be made by dedicated trains. The remaining SNF is bare fuel and is shipped by truck. DOE has not made a policy decision to use dedicated trains. Dedicated train transportation surcharges are more expensive than general freight charges, however security costs, barge, and heavy haul costs increase when general freight transportation is utilized. This assumption is made for cost estimation purposes only, and will be reassessed in the future.

The analysis assumes that five transportation cask designs are required, specifically two for truck transportation (Pressurized Water Reactor (PWR) fuel assembly casks and Boiling Water Reactor (BWR) fuel assembly casks), two for MPC rail transportation (large and small MPC), and one for HLW rail transportation. Acquisition, maintenance, and decommissioning costs of transportation casks are considered in the estimate. Cask contingencies are assumed to be sufficient to procure any specialty casks required to accommodate assemblies that cannot be stowed in one of the five designs.

1.7 Costing Approach

The estimate makes assumptions about technical and policy decisions that have not yet been made, some of which will not be made until after the site suitability evaluation in 1998, and the results of technical performance evaluations and the Nuclear Regulatory Commission (NRC) licensing actions are known. The schedule assumes NRC license approval in 2004, with subsequent approval for a high thermal loading repository license following completion of technical evaluations and prior to the start of emplacement in 2010. Estimates reflect the Program approach, and as such, do not include a centralized federal interim storage facility, now under consideration in Congress. Despite these necessary simplifying assumptions, the TSLCC estimate represents a rational projection of total program costs of the Program Approach.

This analysis used contingency factors specific to each costing element, ranging up to 40% for the rail spur construction. For example, contingency factors of 25% were assumed for transportation cask purchases and decommissioning costs and 10% for all other transportation cost elements. In some cases, contingencies were varied at the cost element level, such as a 22-30% contingency used for the Waste Handling Building construction and 19-29% for operating cost elements. A break down of contingencies for various cost categories and elements is contained in Appendix A.

All cost estimates are presented in constant 1994 dollars for ease of comparison and to eliminate the effects of inflation for a program with a duration spanning 89 years. Historical sunk costs in the following sections were escalated to 1994 dollars using economic escalation indices for DOE construction projects to put all funds in constant year dollars. Fee adequacy analyses that use data from this report should address the effect of cost escalation and inflation, both on program costs and NWF revenues.

The estimate is organized by development and evaluation (D&E) and operations costs. Development and evaluation covers all of the site characterization, preliminary design development, testing, regulatory compliance, and institutional activities associated with the repositories and the waste acceptance, storage, and transportation systems. It includes program management by the Federal government and the fees paid to the NRC to cover that agency's operating costs for participating in the program. It also includes all of the program's historical costs, current program expenditures, and certain expected program expenditures. D&E costs are associated with four cost elements: WAST, first repository, second repository, and other development and evaluation. D&E costs for the first repository and WAST are included with their respective project costs, described in Sections 2-3. The repository cost estimate is further broken out into engineering and construction, emplacement operations, caretaker operations, and closure and decommissioning phases. Historical costs for a second repository are included with other development and evaluation, in Section 4.

Development and evaluation activities that began at the program's inception in 1983 and continue through 2001 are considered as pre-license application D&E, while activities from 2002 through 2010 are considered as post-license application D&E. Program milestones provide the basis for cost projections through 2010. The repository is scheduled to begin operation in 2010. D&E estimates after this date are based, in part, on engineering estimates and assumptions regarding remaining

D&E work, and in part on known tasks and activities. Transportation, WAST program management and integration, systems and compliance, and quality assurance development and evaluation activities are assumed to continue after 2010 through 2015 by which time the program has developed all required cask types and achieves steady-state operation (i.e., transportation of both SNF and HLW). D&E elements that include NRC fees and program management by the Federal government will extend throughout the entire life cycle of the program and terminate in 2071.

Estimates represent the Program Approach for emplacing robust waste packages in an engineered geological repository. Estimates are based on current conceptual design data, representative of the current program. The basis of repository excavation estimates includes recent cost experience from ESF development at Yucca Mountain using a tunnel boring machine to excavate volcanic tuff.

1.8 Overview

Section 1 provides an introduction and summary. Sections 2 through 4 provide the details of the major program components. Sections 5 through 7 provide details of other costs included in the analysis.

Section 1. INTRODUCTION AND SUMMARY: Introduces the reader to the overall purpose of this analysis, summary results and conclusions, the CRWMS components, and assumptions made to perform the analysis.

Section 2. REPOSITORY COSTS: Provides a description of the conceptual design basis used in this TSLCC and discusses the repository costs included for each of five phases of the system life cycle.

Section 3. WASTE ACCEPTANCE, STORAGE & TRANSPORTATION COSTS: Provides a conceptual design description of the Waste Acceptance, Storage, MPC, and Transportation subsystems.

Section 4. OTHER DEVELOPMENT & EVALUATION COSTS: Briefly describes other D&E activities considered and discusses both those activities funded in CRWMS budgets and from NWF appropriations outside of the CRWMS budget authority.

Section 5. PAYMENTS EQUAL TO TAXES (PETT): Provides a description of PETT and the basis of estimate.

Section 6. BENEFITS: Provides a description of the basis of estimate for benefit payments to Nevada and for the Review Panel.

Section 7. CIVILIAN AND DEFENSE ALLOCATION: Presents the cost sharing estimates for life cycle costs between civilian and defense waste generators.

Section 8.	REFERENCES: Contains a reference list.
Appendix A:	Provides a summary of the 1995 TSLCC costs by major cost category (mapped to Work Breakdown Structure elements), with breakouts of historical, future, and contingency allocations.
Appendix B:	Provides a cost comparison between the 1990 TSLCC [Reference 9] and the results of this analysis.
Appendix C:	Presents an annual cost profile for the entire life cycle of the program. Profiles are provided in both table and graphic formats.
Appendix D:	Contains an acronym list for this report.

2. REPOSITORY COSTS

The repository design considered in this analysis consists of both surface and underground operations and facilities. Surface facilities include a Waste Handling Building with a single transfer cell that will accommodate MPCs, uncanistered fuel assemblies, and HLW canisters. Waste will be put into waste packages and prepared for underground emplacement. The Waste Handling Building will be designed to handle both truck and rail casks and will have an annual capacity of 3,000 MTU of spent fuel and 200 HLW transportation casks (containing up to 1,000 canisters of defense HLW). Surface facilities also include a Cask Maintenance Facility where all transportation casks will be inspected, tested, decontaminated, and maintained for reuse. Figure 2-1 depicts the above ground facilities.

Underground facilities consist of access tunnels, support facilities, and emplacement drifts in which the waste is placed. Access to the underground is provided by shafts and ramps. The method of tunnel excavation will be primarily by tunnel boring machine. Where it is impractical to use tunnel boring excavation, drill-and-blast may be used to a limited degree, primarily in non-emplacement areas of the repository. Figure 2-2 depicts subsurface facilities.

The repository will use in-drift emplacement of waste packages (see Figure 2-3) with emplacement of waste beginning in 2010. It is assumed that the emplacement rate is the same rate as the repository receives waste. The repository will be designed not to preclude a future decision to extend the retrievability period to 100 years. A recent study, *Retrievability Period Systems Study Report* [Reference 10] found that a 50-year retrievability period may be adequate. For purposes of TSLCC analysis, the caretaker phase is defined as the interval starting after emplacement of the last waste package and ending 50 years from the date of the initial waste package emplacement. If at the end of the caretaker period the repository is performing as expected, it will be prepared for closure and decommissioning. Retrieval of waste packages for performance confirmation will be at a rate of one package every ten years during the emplacement and caretaker phases. Other performance confirmation activities during these phases include material, nuclear/radiation, engineering, thermomechanical, thermohydrological, and geological investigation of the rock environment at Yucca Mountain. The estimated cost for these activities is $58 million during the emplacement phase and $36 million during the caretaker phase, and is included under the management and integration cost element. For closure and decommissioning, all shafts, ramps, and main and extension drifts will be sealed and backfilled. All interior ramps, if any, as well as all shops and service rooms will also be sealed and backfilled. No backfilling of the emplacement drifts is assumed. Nevada State sales tax is included in the cost estimates, where applicable.

The primary source for the repository design is the *Initial Summary Report for Repository/Waste Package Advanced Conceptual Design* [Reference 11]. In addition to this reference, the underground facilities and surface facilities for the first repository used information contained in Case 4 of the *MRS System Study for the Repository* [Reference 12], Option 30 of the *Exploratory Studies Facility (ESF) Alternatives Study: Final Report* [Reference 13], and *Site Characterization Plan - Conceptual Design Report* [Reference 14]. Some of the data was adjusted to reflect system and design changes such as the use of a tunnel boring machine and in-drift emplacement instead

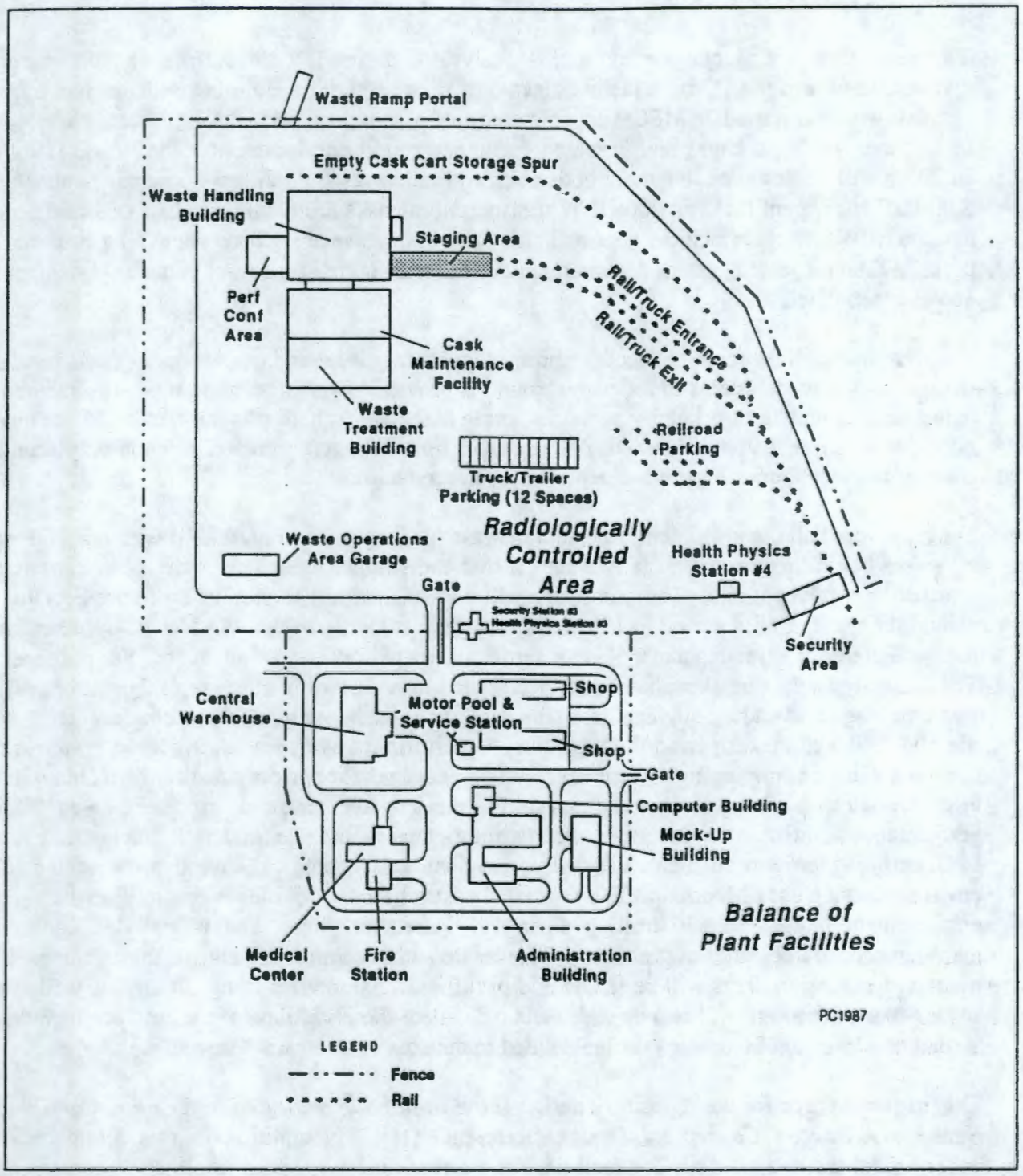

Figure 2-1 Repository Surface Facilities

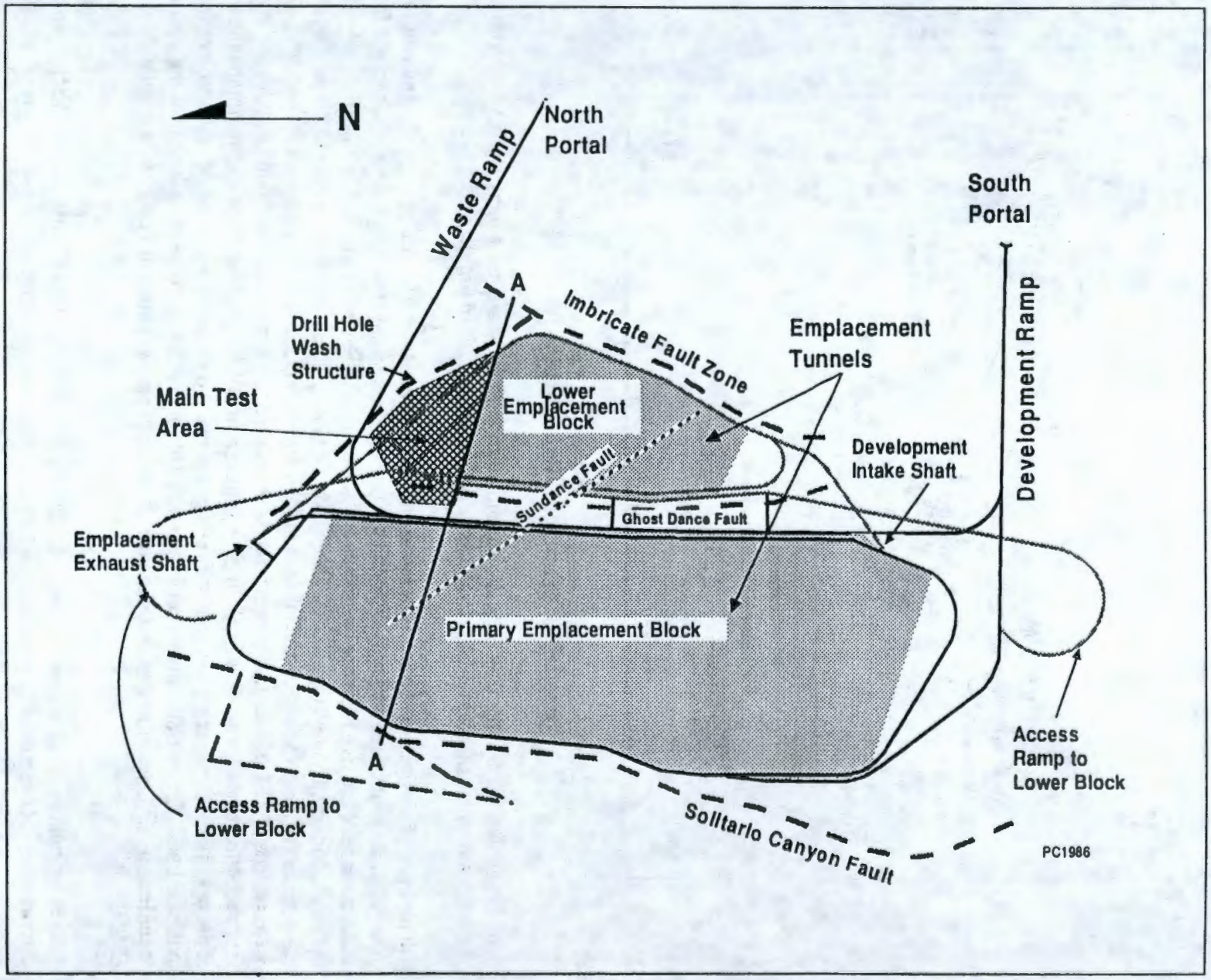

Figure 2-2 Repository Subsurface Facilities

9613441.0571

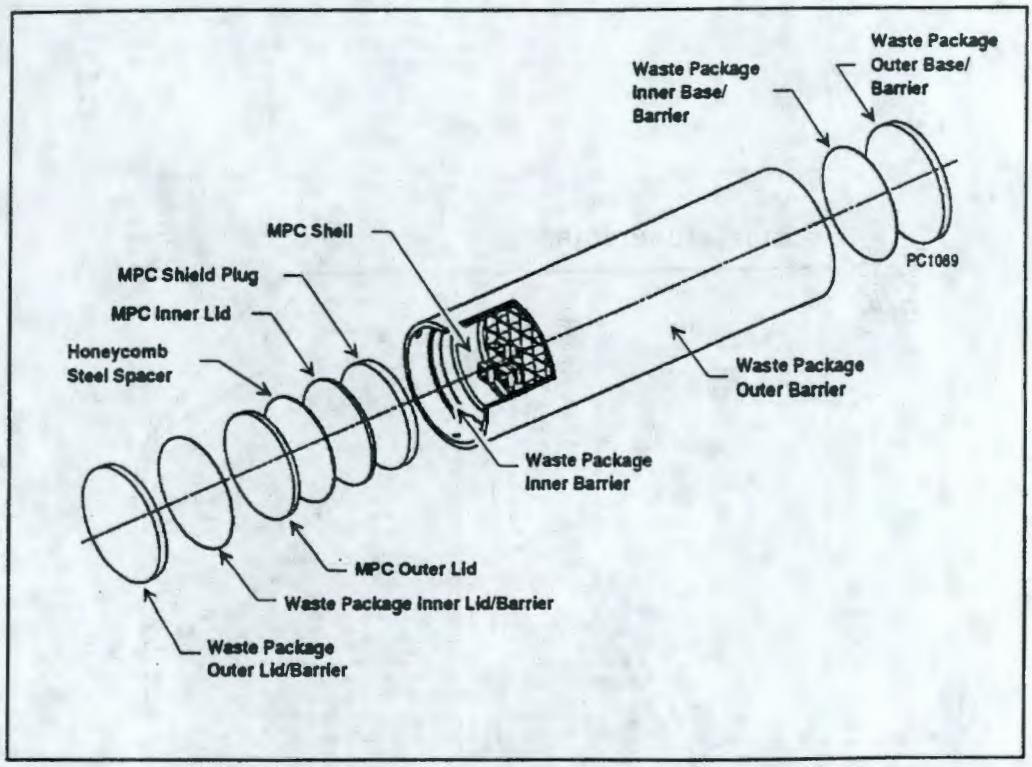

Figure 2-3 Conceptual Waste Package for the MPC

of boreholes. The Waste Handling Building estimate is based on a new design and staffing requirements resulting from Advanced Conceptual Design efforts in the years 1994-95.

The cost of design, construction, operation, and maintenance of a rail spur to the repository is included in the total repository cost. The rail spur design and construction estimate is derived from the average of the five most likely rail routes, which are Caliente-Option B, Carlin-Smokey Valley Option, Modified Valley Option, Jean-Table Mt. Option, and Jean-State Line Pass Option. The cost estimates for these five routes are in *Nevada Repository Preliminary Transportation Strategy Study* [Reference 15]. The design of the rail spur is scheduled to start in 2004 and end in 2009, while the construction will start in 2008 and will be completed in 2010. The operation and maintenance cost of the rail spur assumes a government owned-government operated rail line, based on estimates from the De Leuw Cather Company report [Reference 16] for the Caliente route, adjusted for the average route length. Operation and maintenance of the rail spur will start in 2010 and continue through 2040.

The repository cost category includes D&E, Engineering and Construction, Emplacement Operations, Caretaker Operations, and Closure and Decommissioning phases of the repository. Table 2-1 below summarizes the total repository cost.

Table 2-1 Total Repository Cost
(in Millions of 1994 Dollars)

Phase	Cost
Development and Evaluation	7,968
Engineering and Construction	1,673
Emplacement Operations	8,470
Caretaker Operations	269
Closure and Decommissioning	384
Total Cost[1]	$18,764

[1] Total may not add due to rounding.

Following is a description of the different phases of the repository and the main activities included in each phase.

2.1 Development and Evaluation Phase

Repository D&E activities include all of the site characterization, preliminary design development, testing, regulatory compliance, and institutional activities associated with the repository. Historical costs are divided into two categories: the costs of the first repository candidate site at Yucca Mountain, and the cost for the first repository at candidate sites other than Yucca Mountain. The other first repository historical costs include technical support, the repository technology program, and the salt and basalt sites that were formerly considered for the first repository program. Future costs are projected only for a single surrogate repository based upon the Yucca Mountain configuration and schedule. All site characterization activities at other sites have been terminated in accordance with the NWPAA, Section 161. Second repository historical costs are presented in Table 4-1 and are described in Section 4.4 under Other D&E costs. Repository D&E costs are assumed to continue through the beginning of repository operation in 2010 and are summarized in Table 2-2.

Future Yucca Mountain Repository development and evaluation costs for 1995 through 2010 are estimated at $4,576 million. This period is comprised of the remaining Pre-License Application phase from 1995 through 2001 and the entire Post-License Application phase from 2002 through 2010. The Pre-License Application portion of future D&E cost is $2,818 million. Expenditures of resources will be directed toward the following product areas; Site Suitability, National Environmental Policy Act, Licensing, and Management and Compliance. The Post-License Application portion of future D&E cost is $1,758 million. Expenditures of resources for this phase will be directed toward license update support, waste package development and prototype testing, completion of the ESF, and update of environmental documentation. The Civilian Radioactive Waste Management Program Plan, Volume II [Reference 2] identifies pre-license application activities at a greater level of detail.

For TSLCC costing purposes, surface and underground engineering costs prior to the start of construction in 2004 are included under Repository D&E.

Table 2-2 Repository Development and Evaluation Cost Summary
(in Millions of 1994 Dollars)

Cost Element	Historical 1983 - 1994	Future 1995 - 2010	Total
Repository D&E at Yucca Mountain	1,955	4,576	$6,531
Other Repository D&E	1,437	0	$1,437

2.2 Engineering and Construction Phase

The engineering and construction phase covers the period from 2004-2009. Engineering includes costs for license application design, final procurement and construction design, and Title III designs. Construction is comprised of site preparation; construction of surface facilities including the Waste Handling Building, Cask Maintenance Facility, shafts/ramps, and utility networks; excavation and construction of underground support areas; and construction of a rail spur to the site. Excavation of initial emplacement areas, estimated at $126 million, will be incurred as part of engineering and construction, prior to the start of the emplacement operations phase.

Table 2-3 Repository Engineering and Construction Cost
(in Millions of 1994 Dollars)

Phase	Base	Contingency	Total
Engineering and Construction	1,293	380	$1,673

2.3 Emplacement Operations Phase

The emplacement operations phase covers the period from 2010-2040. It includes all costs for staffing, maintenance, supplies, and utilities during waste emplacement; completing the underground facilities; and procurement of waste packages. It also includes the cost of waste package retrieval for performance confirmation during this phase. Waste package costs account for $3,684 million of the total emplacement operations costs. An additional $129 million is included for the treatment and preparation of low level waste for future disposal. Major surface facilities cost elements during emplacement operations are the operation of the waste handling facilities, including both the waste handling building and the cask maintenance facility, at $1,226 million, balance of plant operations at $1,082 million, surface shaft facilities at $65 million, and management and integration at $58 million. Site preparation costs total $209 million, including $120 million for operation and maintenance of the rail spur during the emplacement period.

Subsurface excavation costs during the emplacement period are estimated at $1,416 million, of which $658 million is for development and $758 million is for emplacement operations. These costs are based upon achieved ESF tunnel boring machine excavation rates. Subsurface excavation begins during the development phase and continues through 2026. Support system facilities, utility costs, and monitoring are estimated at $601 million.

Table 2-4 Repository Emplacement Operations Cost
(in Millions of 1994 Dollars)

Phase	Base	Contingency	Total
Emplacement Operations	6,997	1,472	$8,470

2.4 Caretaker Operations Phase

The caretaker operations phase covers the period from 2041-2059. It includes all costs for staffing, maintenance, supplies, and utilities during this phase. It also includes the cost of waste package retrieval for performance confirmation during this phase.

Table 2-5 Repository Caretaker Operations Cost
(in Millions of 1994 Dollars)

Phase	Base	Contingency	Total
Caretaker Operations	240	29	$269

2.5 Closure and Decommissioning Phase

The closure and decommissioning phase covers the period from 2060-2071. It includes all costs for permanently sealing the underground repository, backfilling shafts, ramps, mains, and extension drifts; dismantling surface facilities; and constructing monuments.

Table 2-6 Repository Closure and Decommissioning Cost
(in Millions of 1994 Dollars)

Phase	Base	Contingency	Total
Closure and Decommissioning	308	76	$384

3. WASTE ACCEPTANCE, STORAGE & TRANSPORTATION COSTS

The Waste Acceptance, Storage, and Transportation Project will develop and operate system elements to accept commercial spent fuel from Purchasers (e.g., commercial reactors) and HLW from Producers (e.g. defense sites) and transport the waste to the repository. The operational Waste Acceptance (WA) element provides the interface between the CRWMS and the utilities and defense HLW sites to maintain contracts and agreements, verify records, verify loading and accept the waste, and maintain material control and accountability. The operational Transportation element provides shipment of commercial spent fuel and HLW from the Purchasers/Producers to the repository and Section 180(c) assistance to states and tribal governments. The operational MPC element provides multi-purpose canisters to the Purchasers for loading, that are then used for on-site storage, transportation, and disposal of the commercial spent nuclear fuel. Under the current program plan, storage of commercial spent nuclear fuel is performed on-site by the Purchasers. WAST D&E and operational costs are summarized in Table 3-1 below.

Table 3-1 Summary of Waste Acceptance, Storage & Transportation Cost
(in Millions of 1994 Dollars)

Cost Element	Cost
Transportation D&E	370
Transportation Operations	2,290
Waste Acceptance D&E	84
Waste Acceptance Operations	1,246
Storage (MRS Facility) D&E	244
MPC D&E	141
MPC Operations	5,519
WAST Project Management & Integration D&E	200
Total [1]	$10,094

[1] Totals may not add due to rounding.

3.1 Transportation

Transportation D&E activities include costs for work related to developing the transportation cask system (excluding the MPC and the MPC transportation cask subsystems), including cask design and testing, developing cask prototypes, and planning and implementing technical assistance for training pursuant to the NWPAA, Section 180(c). Transportation D&E costs, summarized below in Table 3-2, are assumed to continue through 2015 to support HLW cask development.

Table 3-2 Transportation Development and Evaluation Cost Summary
(in Millions of 1994 Dollars)

Cost Element	Historical 1983 - 1994	Future 1995 - 2015	Total
Transportation	167	203	$370

Transportation operations cover the cost of spent fuel shipments from commercial reactors and HLW shipments from defense sites and West Valley to the commercial rail head to which the repository rail spur connects (rail spur construction and operational costs are part of the MGDS surface estimate). This category includes the following cost elements: shipping and security; cask capital and decommissioning; management and support; and emergency response training (Section 180(c) costs). Table 3-3 below summarizes the cost of these elements.

Table 3-3 Transportation Operations Cost
(in Millions of 1994 Dollars)

Cost Element	Base	Contingency	Total [1]
Shipping and Security	854	85	939
Cask Purchasing & Decommissioning	322	80	402
Management & Support	548	55	603
Technical Assistance (Section 180(c)) Costs (Training)	315	32	347
Total [1]	$2,038	$252	$2,290

[1] Totals may not add due to rounding.

The transportation system will be in operation during the waste emplacement period from 2010 to 2040. However, transportation cask procurement and training for operations and emergency response will start three years earlier in preparation for operations. Transportation operations costs are calculated based on the number of casks in use and the number of shipments in a given year.

The transportation system costs assume that 117 facilities ship SNF waste in MPCs by rail (including barge and heavy haul) and 4 commercial reactor facilities ship SNF waste by truck. In addition, limited amounts of commercial SNF in storage at 4 DOE sites are assumed to be shipped by truck. Of the 117 commercial facilities utilizing MPCs, 94 facilities are assumed to handle the 125-ton MPCs and 23 facilities the 75-ton MPCs.

Shipping and security elements include the cost of rail and truck shipments from commercial reactors to the repository starting in 2010 and the cost of defense HLW rail shipments from defense sites to the repository starting in 2015. They also cover the cost of rail surcharges for dedicated rail

shipments. The cost of delivering empty MPCs to the sites starting in 1998 is included in the MPC operations costs in Section 3.3, Table 3-7.

For costing purposes, it is assumed that all loaded rail shipments are transported by dedicated trains and that all unloaded SNF transportation cask rail shipments are transported by general freight trains. Dedicated trains transporting spent fuel from reactors are assumed to contain a maximum of three casks per train. Dedicated trains transporting HLW (defense and commercial) are assumed to be comprised of a maximum of five casks per train. For truck shipments from reactors, legal-weight truck casks will be used; one cask per shipment.

Cask capital costs include the procurement cost of rail, truck, and HLW casks. The MPC rail cask is depicted in Figure 3-1. The cask fleet will consist of GA-4 PWR and GA-9 BWR truck casks, 75-ton rail MPC casks (PWR/BWR), 125-ton rail MPC casks (PWR/BWR), and HLW rail casks. Decommissioning costs are calculated as a percentage of the capital cost for each type.

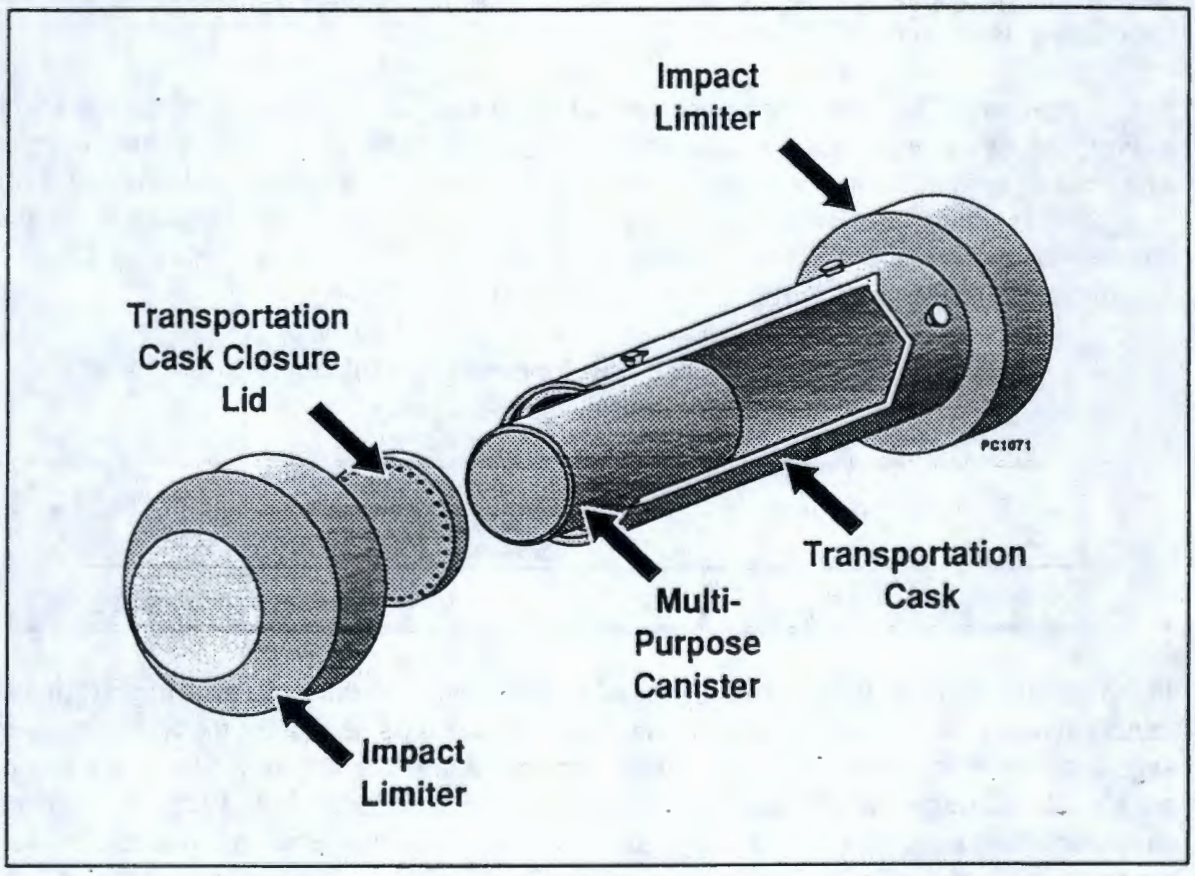

Figure 3-1 Conceptual System MPC Transportation Cask

Management and support costs include the costs for the Transportation Facility (which includes the transportation operations control center) and for all Transportation Planning and Control, Field Operations, and service and maintenance support personnel. Major activities costed in the

Management and support costs include planning and control, field operations, and service and maintenance support. Planning and control includes campaign planning and analysis, highway/railroad traffic management, and service contract management. Field operations annual costs include inspections, conducting utility personnel training (which is the cost of training utility staff to handle transportation casks, including dry run operations training), and surveillance assistance during loading operations.

Waste Fund costs authorized under Section 180(c) of the NWPAA provide for technical assistance and funding to State and tribal governments for training in safe routine transportation and emergency response procedures through whose jurisdiction shipments would be expected to pass.

3.2 Waste Acceptance

Waste Acceptance is responsible for taking title and physical possession of the waste at owners' sites at the time of shipment to the repository, and providing the principal OCRWM interface with utilities and HLW sites.

Waste Acceptance D&E includes the activities of establishing contracts and/or agreements with each site regarding waste acceptance, establishing waste form criteria for DOE wastes, developing a unified data system for waste form and owner information, developing mechanisms for program safeguards and security, and the planning and design of the equipment and facilities to carry out the Waste Acceptance mission. Waste Acceptance D&E costs, summarized below in Table 3-4, are assumed to continue through 2009.

Table 3-4 Waste Acceptance Development and Evaluation Cost Summary
(in Millions of 1994 Dollars)

Cost Element	Historical 1983 - 1994	Future 1995 - 2009	Total
Waste Acceptance	11	73	$84

In the initial operational phase (which begins in 1997 for WA) the WA element performs records verification and loading verification, takes title and physical possession of the waste, and performs safeguards monitoring and maintains material control and accountability for commercial spent nuclear fuel. During steady state operations (starting in approximately 2015) WA will perform similar activities associated with the acceptance of HLW. During operations, WA also manages the contract and agreement processes with utilities and HLW sites, develops schedules for waste acceptance, and maintains records of CRWMS waste acceptance capacity along with data on waste locations and their characteristics [References 8 and 17].

To perform the functions described above, the following support facilities and operations are required: WA Operations Center, WA Site Operations, WAST System Operations, and WA Capital Costs. Costs for each element to meet waste acceptance system requirements, summarized below

in Table 3-5, are assumed to begin in 1998 and continue through 2040, except for material control and accountability activities which continue to 2071.

Table 3-5 Waste Acceptance Operations Cost
(in Millions of 1994 Dollars)

Cost Element	Base	Contingency	Total [1]
WA Operations Center	489	46	535
WA Site Operations	313	30	344
WAST System Operations	306	31	337
WA Capital Costs	28	3	31
Total [1]	$1,137	$110	$1,246

[1] Totals may not add due to rounding.

The WA Operations Center is responsible for maintaining records from the field activities (verification, measurement, acceptance/loading, and operations), establishing and maintaining contracts and agreements, and planning for waste acceptance of both SNF and HLW. The WA Operations Center estimate includes costs for the facility, hardware, and software, as well as personnel and procedure requirements. WA Operations Center activities begin in 1998 with deployment and loading of MPCs, and continue through final pickup of the waste in the year 2040.

WA Site Operations perform activities related to verification and measurement activities (including burnup verification), and conduct acceptance/loading operations, and acceptance of HLW. Estimates assume 100 percent verification of SNF. Site Operations costs include related costs for personnel and procedures, and hardware and software. The operational costs of loading, sealing, and handling casks and MPCs at the reactors are not included in the estimate as these costs are borne by the utilities consistent with the Standard Contract for Disposal [Reference 18]. Site Operations begin in 1998 with deployment and loading of MPCs, and continue through final waste pickup in 2040.

The WAST System Operations will perform system planning/evaluation, support NWF management, coordinate system safeguards and security, and integrate systems schedules. WAST System Operations costs contain the personnel and procedures, hardware, and software associated with these functions. WAST System Operations begin in 1998 with deployment and loading of MPCs and continue through the year 2071.

The WA capital costs for waste acceptance and safeguard verification equipment include costs for acquisition of Tamper Indicating Devices for storage and transportation casks, waste package surveillance equipment (e.g. video cameras and tapes), and identification support equipment (e.g., magnified viewers and video equipment).

3.3 Storage (MRS Facility) Development and Evaluation

Storage cost for WAST includes the MRS facility and the On-Site Transfer and Storage (OSTS) components. Since this TSLCC does not assume an MRS facility and since the procurement and operation of all OSTS equipment is accounted for in the MPC operation element, all storage costs are included in D&E.

Historically, MRS facility, PM&I, Technology Demonstration Projects, and MPC were all costed as part of the MRS element. As such, from 1983 through 1994 all costs are MRS (storage) facility costs. As shown in Table 3-6, from 1995 on, the storage cost consists solely of the costs associated with Technology Demonstration Projects.

Table 3-6 Storage (MRS Facility) Development and Evaluation Cost Summary (in Millions of 1994 Dollars)

Cost Element	Historical 1983 - 1994	Future 1995 - 2010	Total
Storage (MRS Facility) D&E	178	67	$244[1]

[1] Total may not add due to rounding

3.4 Multi-Purpose Canister Subsystem

The current Program Approach includes design and procurement of MPCs for the storage, transportation, and disposal of SNF. MPCs will be provided to utilities by OCRWM for loading by the utilities, either for on-site storage or for transport. This approach reduces handling operations for bare fuel assemblies. Once fuel is loaded into an MPC, the canister is placed in an overpack suitable for dry storage or transportation; at the repository the canister is then placed in a waste package overpack for disposal.

The MPC conceptual design, as shown in Figure 3-2, consists of the canister shell, bottom, inner and outer closure lids, and the structural portions of the shield plug and the inner basket. The MPC cost element includes material costs and fabrication of MPCs assuming large-scale production economics. A mix of large (125 ton-21PWR/40BWR) and small (75 ton-12PWR/24 BWR) MPCs, as defined in the MPC Concept Design Report (CDR) [Reference 19] designs, will be procured to accommodate differences in facility capacities and fuel types.

D&E for the MPC includes the development and certification cost of the MPC subsystem, which includes preliminary design, system engineering, regulatory compliance, engineering development, quality assurance, safety and health, initial prototype development, and design/requirements modifications of the MPC for specialty fuel. Development and certification of the MPC subsystem includes the MPC transportation cask subsystem and the OSTS sub-element. Prior to 1995 MPC-

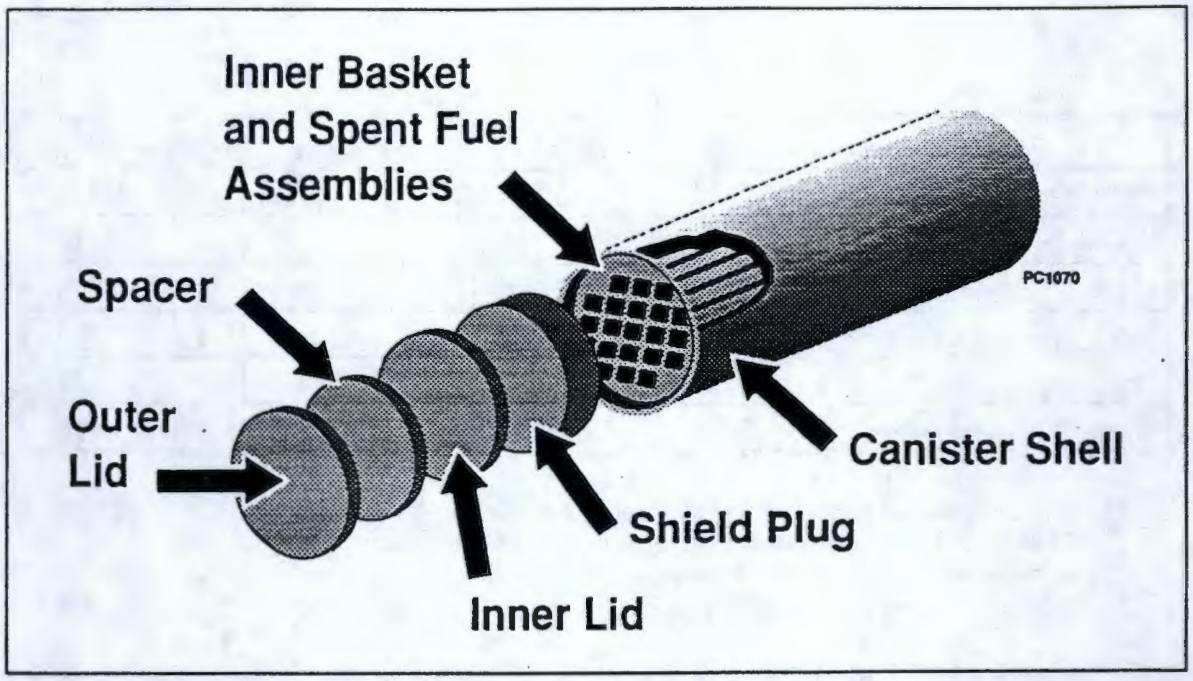

Figure 3-2 Conceptual MPC Components

related cost data was included under the MRS system. MPC D&E costs, summarized below in Table 3-7, are assumed to continue through 2010 to cover fuel not addressed in the 1995 design, and to modify/maintain the existing MPC and MPC transportation cask design.

MPC operations cost elements include the acquisition of MPCs, delivery of MPCs to utility sites, welding equipment used to seal MPCs, and on-site transfer equipment that was developed as part of the MPC conceptual design. Operations costs are summarized in Table 3-8 below.

Table 3-7 MPC Development and Evaluation Cost Summary
(in Millions of 1994 Dollars)

Cost Element	Historical 1983 - 1994	Future 1995 - 2010	Total
Multi-Purpose Canister	0	141	$141

The MPC operations period begins with fabrication of MPCs in 1997 for 1998 deployment into the system, and ends in 2037 after all MPCs are delivered to the utilities. The contract with the MPC supplier (fabricator) is to be a phased contract, competitively bid. The procurement costing schedule takes into account a one year fabrication lead time required for delivery of MPCs to the utilities. MPC costs are based on vendor estimates for material and fabrication prior to the solicitation for MPCs, and include a 25% contingency factor.

Table 3-8 MPC Operations Cost
(in Millions of 1994 Dollars)

Cost Category	Base	Contingency	Total [3]
MPC Cost [1,2]	4,248	1,064	5,310
Delivery of MPCs [1]	100	10	110
Design Maintenance	50	0	50
Welding Equipment [1]	24	5	30
Transfer System [1]	14	4	18
Total MPC Operations [2 & 3]	$4,437	$1,083	$5,519

(1) Unit cost based on MPC-CDR and escalated to 1994 dollars.
(2) Total cost based on unit costs applied to the projected waste stream, in accordance with EIA data adjusted for reactor cancellations.
(3) Totals may not add due to rounding.

After fabrication the MPCs are delivered to the utilities for their use. The delivery of MPCs to sites utilizing the canisters was priced based on the waste acceptance schedule of the ACR.

Operations estimates include an MPC design maintenance function for maintaining contracts with fabricators, minor design modifications, and revisions to specifications, for the period 2011 through 2033. This function maintains the MPC requirements and design base, as well as effort associated with extension of the MPC and transportation cask designs to cover fuel not addressed in the 1995 designs.

Once an MPC is loaded with the spent fuel assemblies, a sealing activity is required to weld the lids shut prior to storage or transportation. The costs of 73 welding machines (equipment) needed to seal the MPCs, and on-site transfer equipment required for transferring the 125-ton MPC into its transportation cask at 21 sites were assumed to be borne by the CRWMS, for purposes of this estimate. The operational costs of loading, sealing, and handling casks and MPCs at the reactors are borne by the utilities.

3.5 WAST Project Management & Integration D&E

WAST PM&I consists of management and integration, systems engineering, technology demonstration, quality assurance, and environmental safety and health activities. These activities are required to support the development of waste acceptance, storage, and transportation subsystems. Prior to 1995, WAST PM&I costs were collected and reported as part of the MRS D&E cost category. PM&I costs, summarized below in Table 3-9, are assumed to continue through 2015 to support the development of the HLW casks.

Table 3-9 PM&I Development and Evaluation Cost Summary
(in Millions of 1994 Dollars)

Cost Element	Historical 1983 - 1994	Future 1995 - 2015	Total
PM&I	0	200	$200

4. OTHER DEVELOPMENT AND EVALUATION COSTS

Other CRWMS D&E activities funded from the NWF include Systems Integration and Regulatory Compliance (represented as Systems & Compliance), Quality Assurance, Program Management, and Second Repository. Other D&E activities that are outside of the CRWMS (Non-CRWMS D&E) budget and are funded from the NWF include Nuclear Regulatory Commission Fees, the Nuclear Waste Technical Review Board, and the Nuclear Waste Negotiator costs. All Other D&E costs are summarized in Table 4-1.

Table 4-1 Other Development and Evaluation Cost Summary
(in Millions of 1994 Dollars)

Cost Element	Historical 1983 - 1994	Future 1995 - 2071		Total [4]
		Base	Contingency	
CRWMS D&E	953	1,890	84	$2,927
Systems & Compliance	106	197	10	314
Quality Assurance	24	245	13	282
Program Management[1]	720	1,448	61	2,229
Second Repository[2]	103	0	0	103
Non-CRWMS D&E	146	441	0	$586
NRC Fees	128	405	0	533
Nuclear Waste Technical Review Board	10	35	0	45
Nuclear Waste Negotiator[3]	8	1	0	9
Total[4]	$1,099	$2,330	$84	$3,513

(1) Includes debt service for 1983 through 1985.
(2) Second repository specific activities prohibited after 1987.
(3) Nuclear Waste Negotiator ended in February 1995.
(4) Totals may not add due to rounding.

4.1 Systems and Compliance

D&E costs for Systems & Compliance are in two categories: Systems Integration and Regulatory Compliance. Systems Integration covers the activities required to support essential design activities for the repository, transportation system, and the ESF. Regulatory Compliance covers the cost of ongoing interactions with Federal agencies, such as the Nuclear Regulatory Commission and the Environmental Protection Agency. Regulatory Compliance also includes environmental, safety and

health coordination, regulatory reviews, and the OCRWM's self-assessment program. Systems & Compliance activities are assumed to continue through 2015, by which time the program has developed all required cask types and achieves steady-state operation (i.e., transportation of both SNF and HLW).

4.2 Quality Assurance

D&E costs for QA cover program-level quality assurance activities. QA includes activities related to program-level and project-level development/maintenance of the CRWMS QA program and overview of participant's QA programs. QA costs prior to 1993 were included as part of the Program Management cost element. QA D&E activities are assumed to continue through 2015, by which time the program has developed all required transportation cask types and achieves steady-state operation.

4.3 Program Management

D&E costs for Program Management cover administration by the Federal government, which includes the administrative costs incurred by DOE Headquarters, the services performed by the Headquarters technical support contractor, the operations of some test facilities, the management of the NWF, and support system studies. Program Management also includes activities related to the overall management of the CRWMS, including strategic planning, international waste management technology, external relations, program control and administration, information management, contract business management, first repository support, waste acceptance, storage, and transportation support. Program Management began in 1983 and is assumed to continue through closure and decommissioning of the repository in 2071.

4.4 Second Repository

D&E costs for Second Repository cover all of the siting, preliminary design development, testing, regulatory compliance, and institutional activities associated with the second repository. In 1987, the NWPAA prohibited specific activities relating to a second repository. Only historical costs are presented.

4.5 Nuclear Regulatory Commission Fees

D&E costs for NRC fees cover the agency's operating costs for participating in the Civilian Radioactive Waste Management Program. Funds for NRC activities that support the program are included in the NRC budget rather than in the DOE NWF budget. However, the funds are debited from the NWF; consequently NRC fees are included in the TSLCC analysis. NRC fees started in 1989 are assumed to continue through closure and decommissioning of the repository in 2071.

4.6 Nuclear Waste Technical Review Board

D&E costs for the Nuclear Waste Technical Review Board cover the establishment and operation of an independent establishment in the Executive branch of government. The Board, consisting of 11 members appointed by the President, evaluates the technical and scientific validity of the activities undertaken by the Secretary. Funds for the Board's activities are appropriated from the NWF. The Board's activities began in 1990 and are assumed to continue through receipt of SNF at the repository in 2010.

4.7 Nuclear Waste Negotiator

D&E costs for the Office of the Nuclear Waste Negotiator cover the establishment and operation of an independent establishment within the Executive branch of government. The Negotiator, appointed by the President, attempted to find a state or Indian tribe willing to host a Monitored Retrievable Storage facility at a technically qualified site. The funds for these activities were appropriated from the NWF. The Negotiator's activities began in 1990 and were terminated in 1995.

5. PAYMENTS EQUAL TO TAXES

In 1987 the NWPAA authorized the Secretary of DOE to grant to affected states and units of local government an amount each fiscal year equal to the amount a state or affected unit of local government, respectively, would receive if authorized to tax DOE activities. States or units of local government are entitled to payments equal to taxes for non-Federal real property and industrial activities, including site characterization activities and development and operation of a repository. PETT are neither a tax nor a payment of tax, but rather a payment under the NWPAA.

The commencement date for repository-related PETT eligibility was May 28, 1986, the date the President approved sites in Nevada, Texas, and Washington as candidates for site characterization. The termination date for PETT eligibility for repository-related site characterization activities at the Texas and Washington sites was December 22, 1987, the date on which the NWPAA suspended site characterization at the two sites. The State of Nevada and local jurisdictions in Nevada and California remain eligible for PETT through facility decommissioning of the repository site at Yucca Mountain in 2071.

On July 27, 1994, the Director of OCRWM negotiated PETT payments with Nye County, Nevada, for arrears tax years May 28, 1986 through June 30, 1992 and future tax years 1993 through 1999. The negotiated strategy was used as the basis for future Nye County, Nevada PETT payments. PETT for 2000 and beyond was based on the 1999 negotiated level, adjusted yearly for inflation. PETT payments to the State of Nevada and other local jurisdictions in Nevada and California for 1995 through 2071 are based on estimates provided by the Yucca Mountain Site Characterization Project Office. The results of the Nye County PETT negotiations and projections of remaining PETT payments to other affected counties in Nevada and California are summarized in Table 5-1.

Table 5-1 PETT Cost Summary
(in Millions of 1994 Dollars)

Cost Element	Expenditures			Total[1] Liability
	Historical 1986-1994	Projected 1995-2000	Projected 2001-2071	
Payment from Repository WBS 1.2.10 [1]	NA	38	NA	38
PETT[2]	9	NA	299	308
Total PETT Liability[3]	$9	$38	$299	$346

(1) PETT from 1995 through 2000 is contained in the Repository work breakdown structure element 1.2.10 and is $38 million.

(2) PETT from 1986 through 1994 is $9 million and PETT from 2001 through 2071 is $299 million.

(3) Total PETT Liability is $346 million - $9 million historical, $38 million from the Repository D&E WBS, and $299 million projected.

(4) Total projected PETT from 1986 through 2071 (less 1995 through 1999) is $308 million.

(5) Totals may not add due to rounding.

6. BENEFITS

The NWPAA allows the Secretary of Energy to enter into benefits agreements with the State of Nevada or affected Indian tribes concerning a repository for the acceptance of HLW or SNF. The Act states that the State or Indian tribe in which the repository is located is eligible to receive annual payments commencing on the date a repository site agreement is signed, ending with the decommissioning of the repository. In return for these benefits, the State or Indian tribe waives its rights to disapprove the recommendation of a specific site.

Annual benefits payments are established in the NWPAA. Payments made prior to the acceptance of SNF will be at the rate of $10 million/year, payments made after the receipt of SNF will be at the rate of $20 million/year. It is assumed, for the purposes of this estimate, that the Secretary enters into a benefits agreement with the State of Nevada in 2001. After a formal benefits agreement, annual payments will be made to the State at the rate of $10 million/year from 2001 through 2009. From first spent fuel receipt at the repository in 2010, through closure and decommissioning of the repository in 2071, annual payments to the state will be $20 million/year. The benefits cost based on the NWPAA is summarized in Table 6-1.

The NWPAA, Section 172(a), requires that a six member Review Panel be established to advise the Secretary on matters relating to the proposed repository, including issues relating to design, construction, operation, and decommissioning of the facilities. Since a Benefits agreement is not assumed to begin until 2001, the Review Panel is assumed to begin with panel selection in 2000. The Review Panel cost based on the NWPAA is also summarized in Table 6-1.

Table 6-1 Benefits Cost Summary
(in Millions of 1994 Dollars)

Cost Element	Expenditures			Total
	Historical 1983 - 1994	Projected 2000 - 2071	Projected[1] 2001 - 2071	
Benefits	0	-	404	$404
Review Panel	0	13	-	$13
Benefits Total	0	$13	$404	$417

[1] Benefits are assumed to begin in 2001 with the signing of an agreement with the State of Nevada and end with the closure and decommissioning of the repository in 2071.

7. CIVILIAN AND DEFENSE ALLOCATION

The CRWMS plans to accept HLW that is vitrified and encased in metal canisters by both commercial and defense waste generators, in addition to approximately 84,000 MTU of commercial SNF. The amount of HLW is currently estimated to be contained in approximately 18,000 canisters of defense HLW and 300 canisters of West Valley commercial HLW [References 7-8].

The allocation of estimated CRWMS costs to civilian, defense, and West Valley HLW programs is shown in Table 7-1. The allocation is based on the methodology summarized below, as published in the *Federal Register Notice* [Reference 20].

Table 7-1 Summary of Civilian, Defense, and West Valley Allocation
(in Millions of 1994 Dollars)

Category	Cost Allocation (1)			
	Defense	West Valley	Civilian	Total (2)
Development & Evaluation	2,756	46	9,717	$12,520
Repository	2,817	47	7,932	$10,796
Transportation	434	10	1,846	$2,290
MPC	0	3	5,516	$5,519
Waste Acceptance	236	5	1,005	$1,246
Benefits	109	2	306	$417
PETT	80	1	226	$308
Total (2)	$6,432	$114	$26,550	$33,096
Allocation %	19.43%	0.34%	80.22%	100%

(1) Based on The Federal Register, Volume 52, Number 161, August 20, 1987.
(2) Totals may not add due to rounding.

According to the *Federal Register* notice, the costs of activities carried out solely for the disposal of a specific type of waste, civilian or defense, are directly assignable to the waste generators. The remainder of the program costs are shared so that there is no cross-subsidization between waste generators, ensuring that each bears the full cost of disposal of its wastes. The *Federal Register* notice identifies, in detail, the method to be used in estimating the disposal fees for the HLW share of total system costs.

The cost allocation is based on the concept of full cost recovery, with sharing formulas applied to all applicable system cost components. The cost allocation is broken out by major cost components that include D&E, repository, transportation, MPCs, waste acceptance, benefits payments, and PETT. The costs of facilities and services carried out solely for HLW disposal, such as transportation and fabricating disposal containers, are directly allocated to the defense share of the total system life cycle cost. Common costs for facilities and services used for both HLW and SNF are shared as a percentage of the total for the shared account. The percentage used to calculate the defense or the West Valley portion of a shared cost account is called a cost sharing factor.

The cost accounts are grouped into one of three categories: assignable direct costs, assignable common variable costs, or common unassigned costs.

Assignable direct costs are incurred solely for the disposal of either HLW or SNF and are allocated in total to either the civilian program, defense program, or to West Valley.

Assignable common variable costs are allocated among the civilian, defense, and West Valley programs by appropriately applying cost sharing factors, piece count, and areal dispersion to the specific individual cost accounts. Sharing costs by means of a *piece count* factor is based on the number of disposal packages emplaced in the repositories. Sharing costs by means of *areal dispersion* is based on the repository disposal area required for HLW disposal divided by the total required disposal area.

Common unassigned costs are the remaining costs that cannot be either directly allocated or allocated on the basis of the cost sharing factors described above. These unassigned costs are allocated by deriving cost sharing factors based on the ratio of assignable HLW costs to the total assignable costs for the following cost categories: assignable repository costs, assignable transportation costs, MPC costs, or assignable D&E costs. These cost sharing factors are then applied to the respective common unassigned cost accounts.

8. REFERENCES

1. U.S Department of Energy, Office of Civilian Radioactive Waste Management, *Civilian Radioactive Waste Management Program Plan Program Overview Volume I*, December 19, 1994, RW-0458.

2. U.S Department of Energy, Office of Civilian Radioactive Waste Management, *Civilian Radioactive Waste Management Program Plan Yucca Mountain Site Characterization Volume II*, December 19, 1994, RW-0458.

3. U.S Department of Energy, Office of Civilian Radioactive Waste Management, *Civilian Radioactive Waste Management Program Plan Waste Acceptance, Storage and Transportation Volume III*, December 19,1994, RW-0458.

4. U.S. Department of Energy, Office of Civilian Radioactive Waste Management, *Annual Capacity Report*, December 1991, DOE/RW-0331P.

5. *Nuclear Waste Policy Amendments Act of 1987*, Public Law 100-203, December 22, 1987, 42 USC 10101 et seq.

6. Energy Information Administration (EIA) 1993 *RW-859 Database*.

7. CRWMS M&O, Data provided by ORNL, *Updates for Tables 2.3 through 2.8 of the DOE Integrated Data Base for 1993*, E00000000-01717-2200-00001 REV00," June 1994.

8. U.S. DOE, *Civilian Radioactive Waste Management System Requirements Document*, Revision 1, DOE/RW-0406P, A00000000-00811-1708-00003, March 1994.

9. U.S. Department of Energy, Office of Civilian Radioactive Waste Management, *Preliminary Estimates of the Total-System Cost for the Restructured Program*, December 1990, RW-P.

10. TRW, *Retrievability Period Systems Study Report*, September 30, 1994.

11. *Initial Summary Report for Repository/Waste Package Advanced Conceptual Design*, September, 1994.

12. Sandia National Laboratories, *MRS System Study for the Repository*, 1990.

13. Sandia National Laboratories, *ESF Alternatives Study: Final Report*, 1991.

14. Sandia National Laboratories, *Site Characterization Plan - Conceptual Design Report*, 1987.

15. U.S. Department of Energy, *Nevada Repository Preliminary Transportation Strategy Study*, February 1995.

16. De Leuw Cather, *Final Yucca Mountain Rail Access Study - Caliente Route Conceptual Design Report*, June 1, 1992.

17. U.S. Department Of Energy, *Waste Acceptance System Requirements Document*, Revision 1, E00000000-00811-1708-00001 Rev 1, DOE/RW-0351P, March 1994.

18. U.S. Department of Energy, *Title 10 CFR Part 961 Standard Contract For Disposal of Spent Nuclear Fuel and/or High Level Radioactive Waste*, January 1, 1994.

19. U.S. Department of Energy, *Multi-Purpose Canister (MPC) Implementation Program Conceptual Design Phase Report*, September 1994, DE-AC01-91RW00134.

20. Federal Register Notice, *Civilian Radioactive Waste Management; Calculating Nuclear Waste Disposal Fees for Department of Energy Defense Program Waste*, pp. 31508-31524, Vol. 52, No 161, August 20, 1987.

9613441.0585

APPENDIX A

1995 Total System Life Cycle Cost Estimate Summary

APPENDIX A 1995 Total System Life Cycle Cost Estimate Summary

Table A-1 provides a breakout of the 1995 TSLCC total cost estimate in constant 1994 dollars. The total estimated future cost to complete the program is $28.2 billion dollars. A total of $4.2 billion was spent through 1994 in YOE dollars. Escalating historical expenditures to 1994 constant year dollars ($4.9 billion), plus the cost to complete of $28.2 billion, results in a total system life cycle cost estimate for the CRWMS of $33.1 billion dollars (94$). The future cost of $28.2 billion includes $3.5 billion in contingency.

Contingencies have been included in the estimate to account for the degree of design development and estimating uncertainty associated with a program spanning almost 90 years. The table shows the base and contingency cost components, as well as the contingency factors (percentages) applied. Table A-1 shows there were three main contingency areas.

Development and Evaluation contingencies ranged from 0 to 10%.

- 10% contingency applied to the Storage, Transportation, Waste Acceptance, and Program Management & Integration cost elements for WAST D&E

- 8% contingency applied to the Quality Assurance, Systems and Compliance, and Program Management costs elements of Other D&E.

WAST operations contingencies ranged from 0 to 25%.

- 10% contingency applied to the Shipping and Security, Management and Support, and 180(c) cost and a 25% contingency applied to the Cask Purchase and Decommissioning cost element under Transportation

- 10% contingency factor was applied to the MPC Delivery cost element and a 25% contingency applied to the MPC Capital Costs, Welding Equipment, and On-Site Storage and Transfer Segment Equipment cost elements under MPC.

MGDS operations cost contingencies ranged from 0 - 40%.

- 16 - 35% contingency applied to the cost elements under Surface Facilities. Waste Handling Building contingency is 28% based on Advanced Conceptual Design.

- 13 - 25% contingency applied to the cost elements under Subsurface Facilities

- 0 - 20% contingency applied to the Waste Package Fabrication (Title I design estimate).

- 14 - 40% contingency applied to the Rail Spur construction and operation due to routing uncertainty.

(in Millions of 1994 Dollars)

WBS/Account Title	WBS / Cost Account	Historical Cost	Base Cost	Contingency Cost	Total Cost	Contingency Percentage	Notes
Development and Evaluation		$4,846	$7,552	$122	$12,520	0 - 10%	
Single Repository (MGDS) (Yucca Mountain Site Characterization)	1.2	$1,955	$4,576	$0	$6,531	0%	
Other First Repository Characterization (Not related to Yucca Mountain)	NA	$1,437	$0	$0	$1,437	0%	1
Second Repository	2.0	$103	$0	$0	$103	0%	2
WAST	3.0	$355	$646	$37	$1,038	0 - 10%	
Storage (MRS Facility)	3.1	178	61	4	244	10%	3
Transportation	3.2	167	189	14	370	10%	
Waste Acceptance	3.3	11	69	5	84	10%	4
MPC	3.4	0	141	0	141	0%	5
PM&I	3.5	0	185	15	200	10%	5
Other D&E		$996	$2,330	$84	$3,410	0 - 8%	
Program Support	9.0	$850	$1,890	$84	$2,824	8%	
Quality Assurance	9.1	24	245	13	282	8%	4
Systems and Compliance	9.2	106	197	10	314	8%	6
Program Management	9.3	720	1,448	61	2,229	8%	7
Non-OCRWM NWF Costs		$146	$440	$0	$586	0%	8
NRC Fees	NA	128	405	0	533	0%	
NWTRB	NA	10	35	0	45	0%	5
NWN	NA	8	1	0	9	0%	5
Payment Equal to Taxes (PETT)	1.2.10	$9	$299	$0	$308	0%	9
Benefits	1.2.10	$0	$417	$0	$417	0%	10
WAST Operations	3.0	$0	$7,612	$1,444	$9,056	0 - 25%	11
Storage	3.1	$0	$0	$0	$0	0%	
MRS Facility		0	0	0	0	0%	
On-Site Storage and Transfer System		0	0	0	0	0%	
Transportation	3.2	$0	$2,038	$252	$2,290	10 - 25%	12
Shipping and Security		0	854	85	939	10%	13
Management & Support		0	548	55	603	10%	
Cask Purchase & Decommissioning		0	322	80	402	25%	
180(c)		0	315	32	347	10%	
Waste Acceptance	3.3	$0	$1,137	$110	$1,246	10%	
WA Operations Center		0	489	46	535	10%	
WA Site Operations		0	313	30	344	10%	
WAST System Operations		0	306	31	337	10%	
WA Capital Costs		0	28	3	31	10%	
MPC	3.4	$0	$4,437	$1,082	$5,519	0 - 25%	
MPC Capital Cost		$0	$4,248	$1,062	$5,310	25%	
Other MPC		$0	$189	$20	$208	0 - 25%	
MPC Delivery		0	100	10	110	10%	
Design Maintenance		0	50	0	50	0%	
Welding Equipment		0	24	6	30	25%	
OST Segment Equipment		0	14	4	18	25%	
PM&I	3.5	$0	$0	$0	$0	0%	
MGDS Cost	1.2	$0	$8,823	$1,973	$10,796	0 - 40%	14
Surface Facilities		$0	$2,595	$673	$3,268	16 - 35%	14
Engineering & Construction		0	497	107	604	22%	
Emplacement Operations		0	1939	523	2462	27%	
Caretaker Operations		0	65	10	76	16%	
Closure & Decommissioning		0	94	33	126	35%	
Subsurface Facilities		$0	$2,280	$468	$2,747	13 - 25%	14
Engineering & Construction		0	288	69	357	24%	
Emplacement Operations		0	1681	336	2017	20%	
Caretaker Operations		0	138	19	157	13%	
Closure & Decommissioning		0	175	44	219	25%	
Waste Package Fabrication		$0	$3,070	$614	$3,684	0 - 20%	14
Engineering & Construction		0	0	0	0	0%	
Emplacement Operations		0	3069	614	3683	20%	
Caretaker Operations		0	1	0	1	20%	
Closure & Decommissioning		0	0	0	0	0%	
Rail Spur		$0	$613	$218	$831	14 - 40%	14
Engineering & Construction		0	508	203	711	40%	
Emplacement Operations		0	105	15	120	14%	
TOTAL CRWMS COST		$4,855	$24,703	$3,538	$33,096		15

Table A-1 1995 Total System Life Cycle Cost Estimate Summary

Table A-1 Notes Key

Note 1 These costs are for historical work related to other first repository site characterization efforts in Texas, Washington, etc.

Note 2 Second repository investigation was terminated in 1987. Costs shown are historical only.

Note 3 Category includes MRS Facility historical costs and Technical Demonstration Projects projected costs.

Note 4 Quality Assurance and Waste Acceptance D&E costs prior to 1993 were included under Program Management D&E.

Note 5 This category was not considered for the 1990 TSLCC.

Note 6 Category is comprised of Systems Integration and Regulatory Compliance.

Note 7 Includes Debt Service for 1983 through 1985.

Note 8 Non-OCRWM NWF Costs are not part of the OCRWM budget but are paid from the Nuclear Waste Fund.

Note 9 PETT is included under the Repository D&E from 1995 through 2000 ($38 million). Amount shown is historical ($9 million) from 1992 through 1994 plus projected ($299 million) from 2000 through 2071.

Note 10 Benefits are assumed to begin in 2001 with the submittal of the repository license application to the NRC. The Benefits Review Panel is assumed to begin in 2000 with panel selection.

Note 11 This category has been reorganized and expanded from the 1990 TSLCC.

Note 12 The costs associated with the development, construction, and maintenance of the Cask Maintenance Facility is included as part of the MGDS, repository costs.

Note 13 The "surcharge" is a part of the shipping cost formula. Security costs are closely tied to shipping costs.

Note 14 Contingency calculations exclude $265 million of the repository cost (for Monuments, Low-Level Waste Disposal, Performance Confirmation, and Land Acquisition) not broken down into base and contingency components.

Note 15 All dollars represented in constant year dollars. Totals may not add due to rounding.

9613441.0588

APPENDIX B

COST COMPARISON WITH 1990 TSLCC ADDENDUM

APPENDIX B Cost Comparison with 1990 TSLCC Addendum

B.1 Summary Comparison of 1990 and 1995 TSLCC Analysis

Table B-1 provides a summary comparison of the results of the current TSLCC estimate with the last TSLCC estimate, published in the 1990 TSLCC Addendum. The 1990 TSLCC Addendum used constant 1988 dollars. These costs are shown in the first column. The second column escalates the 1990 estimate to 1994 dollars to provide an even basis for comparison. Costs from the 1995 estimate are mapped to 1990 TSLCC categories where applicable, in the third column. Explanations for differences between the estimates follow. Note that several categories are not comparable, and the 1995 estimate includes new categories. These categories are the result of more detailed work scope definition, consistent with the work breakdown structure by which work scope is planned to be accomplished.

B.1.1 Development and Evaluation

For the 1990 TSLCC Addendum, all D&E costs were presented together. Table B-1 rolls up D&E costs from the various elements for comparison.

The overall program D&E decreased by $1,118 million dollars. This decrease was due to:

1. a $386 million dollar decrease in WAST D&E due to revised WAST methodologies and assumptions, the removal of the MRS facility, new budgetary data, and task consolidations under the newly organized WAST project

2. a $678 million dollar decrease in Other D&E (CRWMS and Non-CRWMS D&E) due to revised Other D&E methodologies and assumptions, new budgetary data, and the addition of contingency

3. a $27 million dollar reduction in overall single repository D&E achieved through updated historical data from 1983 through 1994, new budgetary data for 1995 through 2000, and revised methodologies and assumptions applied to 2001 through 2010

4. a $27 million dollar reduction in second repository historical costs through the use of updated historical data for 1983 through 1994.

When making comparisons between Table B-1 D&E Repository costs and Table 2-2, only total costs can be compared. This constraint is due to the use of different cost elements, specifically "Pre-License Application" and "Post-License Application" in Table B-1, as well as "Repository D&E at Yucca Mountain" and "Other Repository D&E" in Table 2-2. For an explanation of Pre- and Post-License Application, see Paragraph 2.1.

Cost Category	TSLCC90 Single Rep MGDS 2010 with MRS 1988 $	TSLCC90 Single Rep MGDS 2010 with MRS 1994 $	TSLCC95 Single Rep MGDS 2010 with No-MRS 1994 $	Delta 1994 $
Development & Evaluation (D&E)	$11,589	$13,638	$12,520	($1,118)
WAST	$1,202	$1,424	$1,038	($386)
Transportation	$902	$1,069	$370	($699)
Waste Acceptance	Note 5	Note 5	$84	$84
Storage (MRS Facility)	$300	$356	$244	($112)
MPC	Note 6	Note 6	$141	$141
PM&I	Note 6	Note 6	$200	$200
Single Repository	$6,747	$7,995	$7,968	($27)
Pre-LA (FY 1983 - FY 2001) (Note 1)	$5,126	$6,074	$6,210	$136
Post-LA (FY 2002 - FY 2010)	$1,621	$1,921	$1,758	($163)
Second Repository	$110	$130	$103	($27)
Other OCRWM D&E	$2,791	$3,307	$2,824	($483)
Program Management (Note 2)	$2,490	$2,951	$2,229	($722)
Quality Assurance	Note 5	Note 5	$282	$282
Systems & Compliance	$301	$357	$314	($43)
Other Non-OCRWM D&E	$659	$781	$586	($195)
NRC Fees	$659	$781	$533	($248)
Nuclear Waste Technical Review Board	Note 6	Note 6	$45	$45
Nuclear Waste Negotiator	Note 6	Note 6	$9	$9
Payment Equal To Taxes (PETT) (Notes 4&6)	$0	$0	$308	$308
Benefits (Note 9)	$657	$779	$417	($361)
WAST Operations	$4,664	$5,526	$9,056	$3,529
Transportation	$2,802	$3,320	$2,290	($1,030)
Cask Purchase & Decommissioning	604	715	402	($313)
Cask Maintenance	320	379	Note 10	($379)
Cask Maintenance Facility	582	690	Note 3	($690)
Surcharge, Shipping, and Security (Note 8)	$1,296	$1,536	$939	($597)
Surcharge	620	735	Note 8	Note 8
Shipping	507	601	Note 8	Note 8
Security	169	200	Note 8	Note 8
Management and Support (Note 6)	0	0	$603	$603
180(c) (Note 6)	0	0	$347	$347
MPC (Note 6)	$0	$0	$5,519	$5,519
MPC Capital Cost	$0	$0	$5,311	$5,311
Other MPC	$0	$0	$208	$208
MRS	$1,862	$2,206	$0	($2,206)
Management & Integration	124	147	0	($147)
Engineering & Construction	230	273	0	($273)
Operations	1,484	1,759	0	($1,759)
Decommissioning	24	28	0	($28)
Waste Acceptance (Note 6)	$0	$0	$1,246	$1,246
WA Operations Center	0	0	535	$535
WA Site Operations	0	0	344	$344
WAST System Operations	0	0	337	$337
WA Capital Cost	0	0	31	$31
MGDS	$8,738	$10,350	$10,796	$446
Engineering & Construction	1,177	1,393	1,673	$280
Emplacement Operations	6,720	7,963	8,470	$507
Caretaker Operations	343	405	269	($136)
Closure & Decommissioning	498	589	384	($205)
Total CRWMS Cost	$25,569	$30,293	$33,096	$2,804

Note 1 Pre-LA costs ($6,210 million) contains $1,437 million in other first repository work not related to the Yucca Mountain Project.
($6,210 million - $1,437 million = Yucca Mountain Pre-LA cost of $4,773 million.)

Note 2 Program Management includes Debt Service for FY 1983 through 1985.

Note 3 CMF cost included in MGDS cost.

Note 4 PETT is included under the Repository D&E from 1995 through 2000 ($36 million).
Amount shown is historical ($9 million) from 1992 through 1994 plus projected ($299 million) from 2000 through 2071.

Note 5 Quality Assurance and Waste Acceptance D&E costs prior to FY 1993 were included in Program Management D&E.

Note 6 This category was not considered in the 1990 TSLCC.

Note 7 All dollar amounts represent constant year dollars.

Note 8 TSLCC95 does not separate these costs but combines them under the "Surcharge, Shipping, and Security" heading.

Note 9 Benefits Review Panel cost of $13.15 million included.

Note 10 Cask Maintenance labor cost is included under WAST Management & Support for TSLCC95.

Table B-1 TSLCC 1990 and TSLCC 1995 Comparison

B.1.2 PETT

As noted in Section 5, the total PETT liability or increase over the 1990 TSLCC is $346 million dollars. Historically, $9 million has been paid through 1994, $38 million has been negotiated and budgeted for payment (Repository work breakdown structure element 1.2.10) in 1995 through 2000, and $299 million is projected from 2001 through 2071. The PETT category in the comparison table reflects the historical $9 million and the projected PETT liability of $299 million, totaling $308 million dollars. The $38 million for PETT in the 1995 through 2000 timeframe is included in the repository pre-license application D&E cost category.

B.1.3 Benefits

The overall program Benefits estimate decreased by $361 million dollars due to the elimination of the requirement to provide benefits for the MRS facility and a shorter operational period for the repository (payment liability period down from 2075 to 2071), and the addition of the Review Panel.

B.1.4 Transportation

The overall transportation estimate decreased by $1,030 million. The Cask Maintenance Facility, included under transportation in the 1990 estimate, is included in the repository surface facility estimate. This estimating change accounts for a decrease of $690 million in the Transportation element. Disregarding the Cask Maintenance Facility accounting change, Transportation decreased by $340 million. Decreases in cask purchases and decommissioning costs are due to longer cask service life assumptions and elimination of transportable storage casks assumed in 1990. Shipping, security, and surcharge costs decreased due to lower rates per train-mile, a reduced number of cask shipments, and elimination of shipments of commercial SNF to and from an MRS facility. The inclusion of management and support, and Section 180(c) costs, which were not previously addressed, increased costs by $603 million and $347 million, respectively. Support costs reflect better definition of Transportation work scope, beyond shipping and cask acquisition.

When comparing the Operational Transportation costs shown in Table B-1 and Table 3-3, cost elements relate as follows:

1. Table 3-3 "Shipping & Security" cost element is equivalent to Table B-1 Transportation cost elements "Security," Shipping," and Surcharge."

2. Table 3-3 "Cask Capital & Decommissioning" cost element is equivalent to Table B-1 Transportation cost element "Cask Purchase."

B.1.5 MPCs

A new element to the system design is the MPC cost category. MPC costs increased by $5,519 million.

B.1.6 MRS

The 1995 TSLCC does not include an MRS system. This accounts for a reduction of $2,206 million.

B.1.7 Waste Acceptance

Waste Acceptance is a newly defined element of the Program. Limited waste acceptance costs were included prior to 1993 in Program Management D&E. This work scope reflects an increase of $1,246 million, comprised of $535 million for the Operations Center, $344 million for Site Operations at utility sites, including 100 percent fuel verification (burnup and International Atomic Energy Agency), $337 million for WAST System Management operations and coordination, and $31 million for Capital Equipment purchases.

B.1.8 MGDS

The MGDS estimate increased by $446 million. Major changes between the 1990 and 1995 TSLCCs are summarized in the discussion which follows. A significant component of the increase is an additional $686 million for construction and operation of a rail spur to the repository site. This estimate reflects an average of several candidate routes, pending selection of a final route. The 1990 estimate included $146 million for a rail spur. Use of robust waste packages requiring more expensive materials accounts for an increase of $1,701 million. These packages show significantly improved performance as an engineered barrier system, over the small, stainless steel packages used in previous estimates. The change of material and increase in containment barrier thickness and mass are the larger contributors to the cost increase, in particular the material defined for HLW. It should be noted that the small packages used in the 1990 analysis were not suitable to meet isolation and package life requirements. The surface facilities estimate was reduced by $523 million, despite inclusion of the Cask Maintenance Facility noted above. This reduction is primarily attributed to the significant decrease in the number of waste packages to be handled. The significantly larger number of canisters in the 1990 TSLCC required four hot cells, while in the 1995 TSLCC only one hot cell is needed. The shafts/ramps underground and subsurface excavation decreased by $501 million, and underground service system costs decreased by a total of $761 million. Subsurface cost account decreases are due to both system and design changes such as the assumption of a hot repository, the use of tunnel boring machines (and recently achieved tunneling rates), and in-drift emplacement instead of boreholes. Updated actual labor rates in the 1995 TSLCC estimate, based on current rates for the ESF excavation also account for reductions.

Table B-1 shows repository costs by phase. Engineering and construction phase costs increased by $280 million. The increase results from a $413 million increase in site preparation costs due to higher rail spur costs, offset by a $103 million decrease in surface facilities costs due to lower waste handling building costs, and other changes. Emplacement phase operations costs increased by $507 million. Major emplacement operations changes include a $1,701 million increase in waste package fabrication costs, an $898 million decrease in subsurface excavation and underground service systems costs due

to the assumption of a hot repository and other design and system changes, and a decrease in surface facility costs of $354 million, primarily in balance of plant costs. Caretaker operations phase costs decreased by $136 million, primarily due to a $91 million reduction in facilities costs, largely in balance of plant costs, and a $39 million reduction in underground service systems costs. Closure and decommissioning costs decreased by $205 million. The major contributors are a $132 million reduction in subsurface excavation cost and an $85 million reduction in underground service systems costs.

B.2 Assumption Differences

The 1990 and 1995 estimates are based on significant changes in assumptions and design approach. Table B-2 provides a summary of differences in assumptions between the 1990 estimate and the 1995 estimate for the current Program Approach.

Table B-2 Differences Between the 1990 and 1995 TSLCC

TOPIC	1990 TSLCC	1995 TSLCC
SNF Waste Stream		
SNF Discharge Projection	1987 RW-859 Data	1993 RW-859 Data
MGDS Receipt Rate	See Reference 9	See Table 1-2
Waste Acceptance		
Total Amount Accepted	86,757 MTU SNF 18,050 defense HLW canisters (6,050 SRP, 10,500 INEL, 1,200 Hanford WA HLW) 300 canisters West Valley HLW	83,954 MTU SNF 18,046 defense HLW canisters (5,453 SRP, 2,733 INEL, 9,860 Hanford, WA) 300 canisters West Valley HLW
Start Fuel Pickup	1998	2010
Last Fuel Pickup	2042	2040
Transportation		
Cask Capacities	RX Rail 21PWR/48BWR Legal weight trucks (LWT) 3PWR/7BWR From MRS Rail 34PWR/80BWR HLW 5 Canisters	LG Rail 21PWR/40BWR--SM Rail 12PWR/24BWR LWT 4 PWR/9 BWR From MRS Rail N/A HLW 5 canisters
Transportation Modal Split	54 Facilities Ship by Truck 65 Facilities Ship by Rail	4 Reactor Facilities Ship by Truck (plus 4 DOE storage sites) 23 Facilities Ship by SM Rail 92 Facilities Ship by LG Rail
Cask Life (yr)/Utilization(days)	RX Rail 20 / 280 LWT 20 / 310 From MRS 20 / 310 HLW 20 / 310	RX Rail 40 / 220 LWT 25 / 240 From MRS N/A HLW 25 / 225
Travel Speed	Truck 900 Miles/Day	Truck 960 Miles/Day
MRS		
Number of MRSs	One	None
Location	Generic Eastern	N/A
Start Date	1998	N/A
Capacity	10,000 MTU Prior to MGDS startup, 15,000 MTU Thereafter	N/A
Storage Technology	Transportable Storage Casks (1st 2 years) and Dry Vertical Concrete Casks	N/A
MGDS		
Waste Package Capacity	3PWR&4BWR Hybrid 4PWR/10BWR 1 HLW	12PWR/21BWR 21PWR/40BWR (MPC or Waste Package) 4 HLW
Emplacement Method	Vertical Boreholes	Large in-drift Waste Packages
Cask Maintenance Facility	Standalone	Integrated with Repository Facilities

Table B-2 Differences Between the 1990 and 1995 TSLCC (Cont'd.)

TOPIC	1990 TSLCC	1995 TSLCC
Number of Cask Shipments	From Reactor Rail (large) 3,708PWR/2,087BWR From Reactor Rail (small) N/A From Reactor Truck 17,628PWR/9,707BWR From MRS 3,883PWR/2,132BWR HLW 3,612	From Reactor Rail (large) 5,567PWR/3,206BWR From Reactor Rail (small) 1,015PWR/1,712BWR From Reactor Truck 1,207PWR/3BWR From MRS N/A HLW 3,670
Number of MRS Storage Casks	724PWR/357BWR 90TSC	N/A
PETT Estimate Included	No	Yes
Benefits	MRS Payments Repository payments from 1991 to 2075	No MRS payments Repository payments from 2001 to 2071
Review Panel	Not Considered	From 2000-2015
Other CRWMS D&E Contingency	Not Considered	From 2001-2015
Number of Waste Packages	3,735 PWR 1,348 BWR 38,515 Hybrid 18,050 HLW 61,648 Total	5,567 PWR/3,206 BWR (large) 1,015 PWR/1,712 BWR (small) 209 PWR/1 BWR (Waste Packages) 4,600 HLW 16,310 Total

9613441.0593

APPENDIX C

ANNUAL COST PROFILE

(In Millions of 1994 Dollars)

YEAR	WA	Rep	D&E	PETT	Benefits	Total
1983	0.00	0.00	237.19	0.00	0.00	237.19
1984	0.00	0.00	358.17	0.00	0.00	358.17
1985	0.00	0.00	402.28	0.00	0.00	402.28
1986	0.00	0.00	500.38	0.00	0.00	500.38
1987	0.00	0.00	578.04	0.00	0.00	578.04
1988	0.00	0.00	452.70	0.00	0.00	452.70
1989	0.00	0.00	391.60	0.00	0.00	391.60
1990	0.00	0.00	373.66	0.00	0.00	373.66
1991	0.00	0.00	346.85	0.00	0.00	346.85
1992	0.00	0.00	369.78	1.11	0.00	370.88
1993	0.00	0.00	405.72	2.06	0.00	407.78
1994	0.00	0.00	430.07	5.51	0.00	435.57
1995	0.00	0.00	528.29	8.29	0.00	528.29
1996	0.00	0.00	611.29	6.13	0.00	611.29
1997	34.50	0.00	622.13	6.79	0.00	656.63
1998	44.50	0.00	603.16	6.44	0.00	647.66
1999	55.70	0.00	576.73	5.12	0.00	632.43
2000	58.00	0.00	518.64	5.08	0.02	576.65
2001	114.85	0.00	446.52	4.57	8.01	573.94
2002	77.50	0.00	369.71	4.57	7.79	459.56
2003	67.92	0.00	367.44	4.57	7.57	447.50
2004	73.82	115.12	355.88	4.57	7.36	556.75
2005	74.97	206.82	345.24	4.56	7.15	638.74
2006	71.58	241.05	337.11	4.57	6.95	661.26
2007	121.72	260.67	335.23	4.57	6.75	728.94
2008	105.28	435.46	329.11	4.56	6.57	880.98
2009	163.59	437.41	317.34	4.57	6.39	929.29
2010	220.95	166.75	289.37	4.57	12.14	693.77
2011	300.36	175.93	73.81	4.16	11.65	565.90
2012	319.16	198.89	70.57	4.16	11.32	604.10
2013	301.66	223.05	67.33	4.16	10.99	607.19
2014	319.67	262.78	64.09	4.16	10.68	661.37
2015	310.16	309.17	60.84	4.16	10.36	694.70
2016	299.22	306.83	21.01	4.16	10.07	641.29
2017	295.19	306.25	20.26	4.16	9.78	635.64
2018	298.74	301.54	19.51	4.16	9.50	633.44
2019	292.87	300.05	18.76	4.16	9.22	625.06
2020	296.72	299.00	18.01	4.16	8.96	626.85
2021	298.40	299.54	17.26	4.16	8.71	628.06
2022	294.37	301.31	16.51	4.16	8.46	624.80
2023	302.85	299.13	15.76	4.16	8.21	630.10
2024	300.74	300.31	15.01	4.16	7.98	628.20
2025	303.39	298.52	14.26	4.16	7.75	628.07
2026	307.87	298.58	13.51	4.16	7.53	631.64
2027	305.79	301.22	12.76	4.16	7.31	631.23
2028	300.79	299.66	12.00	4.16	7.11	623.71
2029	313.62	302.23	11.49	4.16	6.90	638.40
2030	313.52	286.08	10.98	4.16	6.71	621.44
2031	306.71	274.51	10.47	4.16	6.51	602.36
2032	320.65	276.73	9.96	4.16	6.33	617.82
2033	325.43	274.90	9.45	4.16	6.15	620.09
2034	179.23	277.60	8.94	4.16	5.98	475.90
2035	113.46	275.18	8.43	4.16	5.80	407.02
2036	93.17	274.85	7.92	4.16	5.64	385.73
2037	102.66	269.35	7.41	4.16	5.48	389.06
2038	82.91	223.74	6.89	4.16	5.32	323.02
2039	75.14	234.30	6.38	4.16	5.17	325.14
2040	45.63	228.73	5.87	4.16	5.03	289.42
2041	26.30	16.46	1.50	4.16	4.88	53.31
2042	0.80	12.13	1.50	4.16	4.75	23.34
2043	0.80	12.13	1.50	4.16	4.61	23.20
2044	0.80	12.13	1.50	4.16	4.48	23.07
2045	0.80	12.13	1.50	4.16	4.36	22.95
2046	0.80	12.13	1.50	4.16	4.23	22.83
2047	0.80	12.13	1.50	4.16	4.11	22.70
2048	0.80	19.15	1.50	4.16	4.00	29.61
2049	0.80	19.15	1.50	4.16	3.89	29.50
2050	0.80	17.40	1.50	4.16	3.78	27.64
2051	0.80	12.13	1.50	4.16	3.67	22.26
2052	0.80	12.13	1.50	4.16	3.57	22.16
2053	0.80	12.13	1.50	4.16	3.47	22.06
2054	0.80	12.13	1.50	4.16	3.37	21.97
2055	0.80	12.13	1.50	4.16	3.27	21.87
2056	0.80	12.13	1.50	4.16	3.19	21.78
2057	0.80	12.13	1.50	4.16	3.10	21.69
2058	0.80	19.15	1.50	4.16	3.01	28.63
2059	0.80	20.09	1.50	4.16	2.92	29.48
2060	0.80	58.19	3.00	4.16	2.99	69.14
2061	0.80	48.79	3.00	4.16	2.91	59.67
2062	0.80	48.79	3.00	4.16	2.83	59.59
2063	0.80	48.79	3.00	4.16	2.75	59.51
2064	0.80	48.79	3.00	4.16	2.68	59.44
2065	0.80	48.79	3.00	4.16	2.61	59.37
2066	0.80	20.89	3.00	4.16	2.55	31.40
2067	0.80	18.63	3.00	4.16	2.48	29.07
2068	0.80	18.63	3.00	4.16	2.42	29.01
2069	0.80	18.63	3.00	4.16	2.35	28.95
2070	0.80	3.15	3.00	4.16	2.29	13.40
2071	0.80	2.06	3.00	4.16	2.23	12.25
Total	$9,055	$10,796	$12,520	$346	$417	$33,096

Table C-1 Annual Cost Profile

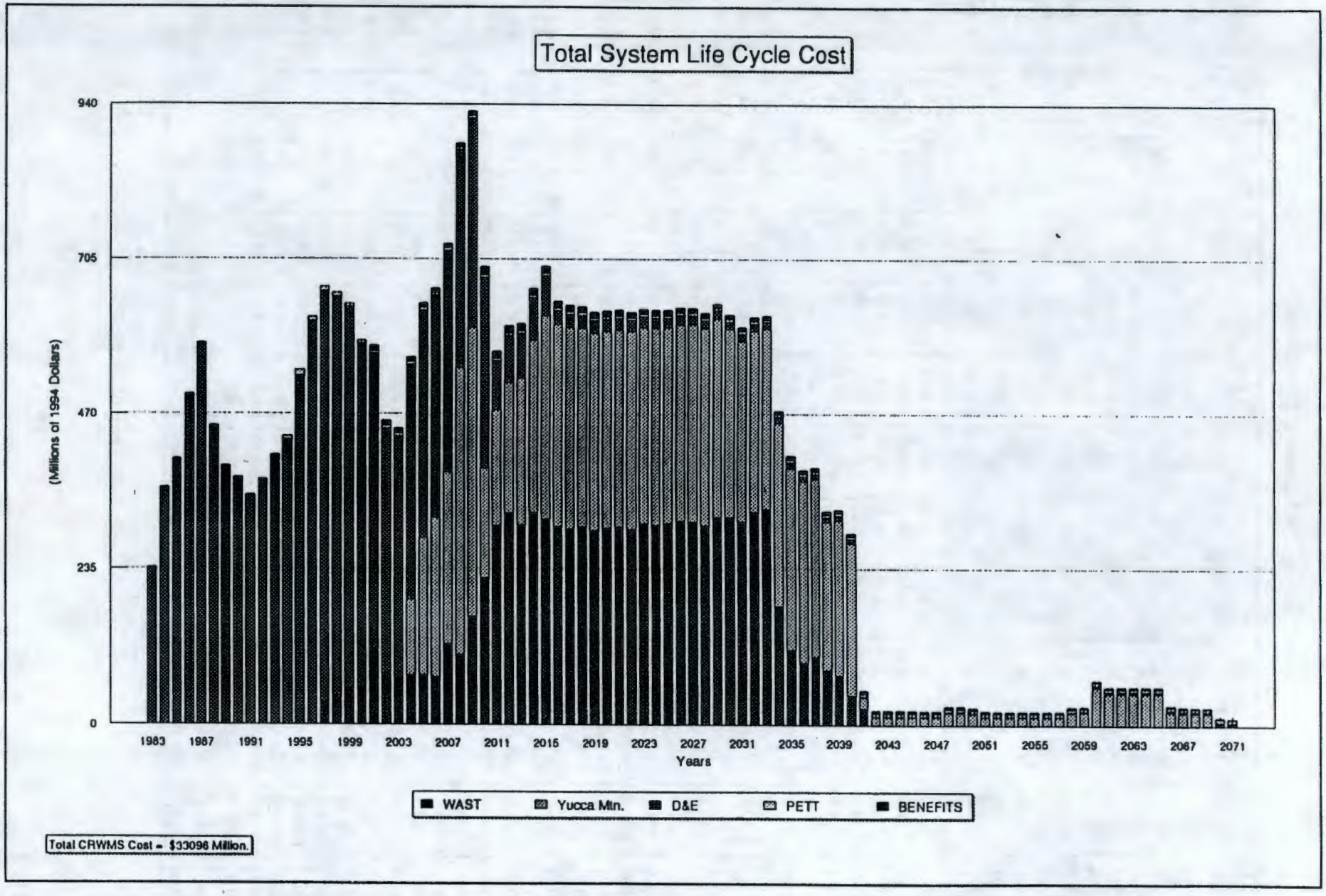

Figure C-1 Annual Cost Profile

9613441.0595

APPENDIX D

LIST OF ACRONYMS

APPENDIX D List of Acronyms

A

ACR	Annual Capacity Report

B

BWR	Boiling Water Reactor

C

CDR	Conceptual Design Report
CRWMS	Civilian Radioactive Waste Management System

D

D&E	Development and Evaluation
DOE	U.S. Department of Energy

E

EIA	Energy Information Administration
ESF	Exploratory Studies Facility

G

GA	General Atomics Corporation

H

HLW	High Level Waste

I

INEL	Idaho National Engineering Laboratory
ISF	Interim Storage Facility

L

LG	Large
LWT	Legal Weight Truck

M

MGDS	Mined Geologic Disposal System
MPC	Multi-Purpose Canister
MRS	Monitored Retrievable Storage
MTU	Metric Ton(s) of Uranium

N

NRC	Nuclear Regulatory Commission
NWF	Nuclear Waste Fund
NWPAA	Nuclear Waste Policy Act Amendment of 1987

O

OCRWM	Office of Civilian Radioactive Waste Management
ORNL	Oak Ridge National Laboratories
OSTS	On-Site Transfer and Storage

P

PETT	Payments Equal to Taxes
PM&I	Project Management & Integration
PWR	Pressurized Water Reactor

Q

QA	Quality Assurance

S

SM	Small
SNF	Spent Nuclear Fuel
SRP	Savannah River Project

T

TSLCC	Total System Life Cycle Cost

W

WA	Waste Acceptance
WAST	Waste Acceptance, Storage, and Transportation
WBS	Work Breakdown Structure

Y

YOE	Year of Expenditure

9613441.0597

The following number is for OCRWM Records Management purposes only and should not be used when ordering this publication.

Accession No. HQ0•19950830•0037