852 508 1360
0036833
1 of 2

START

Volume III

Part 1

Conceptual Design
for the

Waste Receiving And Processing Facility Module 2A

9413227.0099

Outline Specifications

Prepared for
U.S. DEPARTMENT OF ENERGY
Richland Operations Office
Richland, Washington

Prepared by
UNITED ENGINEERS & CONSTRUCTORS
A Raytheon Company

Western Operations

JUN 1994
RECEIVED
EPIC

Copy No. ____

~~June 1992~~

THIS PAGE INTENTIONALLY
LEFT BLANK

SPECIFICATION SECTION
FOR
11502 DRUM LID REMOVER

TABLE OF CONTENTS

PART 1 GENERAL

1.01 SECTION SCOPE
1.02 RELATED SECTIONS
1.03 REFERENCES
1.04 SYSTEM DESCRIPTION
1.05 SUBMITTALS
1.06 DELIVERY, STORAGE AND HANDLING
1.07 SITE CONDITIONS

PART 2 PRODUCTS

2.01 MANUFACTURERS
2.02 MATERIALS
2.03 EQUIPMENT
2.04 COMPONENTS
2.05 FABRICATION
2.06 SHOP QUALITY CONTROL

PART 3 EXECUTION

3.01 PREPARATION
3.02 ERECTION, INSTALLATION AND APPLICATION
3.03 FIELD QUALITY CONTROL
3.04 ADJUSTING AND CLEANING
3.05 DEMONSTRATION
3.06 PROTECTION

APPENDIX

APPENDIX A DATA SHEETS

WRAP MODULE 2A

SECTION 11502

DRUM LID REMOVER

PART 1 GENERAL

1.01 SECTION SCOPE

A. This specification establishes the requirements for detailed design, fabrication, installation, start-up, and acceptance testing of drum lid demoval equipment within WRAP 2A.

1.02 RELATED SECTIONS

1.03 REFERENCES

A. American National Standards Institute (ANSI)

B. American Society for Testing and Materials (ASTM)

C. National Electric Code (NEC)

D. AWS D1.1 "Structural Welding Code"

E. NEMA MG-1 Motors and Generators

1.04 SYSTEM DESCRIPTION

A. The drum lid removal equipment provides the function of lifting the drum lid off a drum, once the clamp band has been removed. This specification also provides for a manual clamp band (quick release type) removal mechanism for the grout enclosure.

B. General Description

The drum lid remover consists of a suction cup mounted on a deployment arm. When the drum clamp has been removed the deployment arm suction cup to be in contact with the drum lid. With the suction cup in position a vacuum pump is actuated and air in the suction cup is evacuated. With the suction cup and the drum lid locked together the deployment arm is lifted and the drum lid is lifted from the drum.

9413227.0101

C. Construction

The deployment arm is constructed of painted carbon steel. The suction cup is made from rubber.

D. Control and Instrumentation

1. The lid lifter drive will be interfaced with control and safety interlocks.

2. The safety interlocks will prevent operation of the lid lifter if the environmental conditions are not satisfactory. The lid lifter will be operated from the main control room.

E. Data Sheets

Equipment Tag Nos. WBS Area Location Numbers and equipment data sheets for this description are provided in **Appendix A.**

9413227.0102

END OF SECTION

WRAP MODULE 2A

APPENDIX A

EQUIPMENT/INSTRUMENT DATA SHEETS

WBS LOCATION	EQUIPMENT TAG	SERVICE
1105	RT-05-522	Lid Lifter - Shredder and Repack Enclosure
1105	RT-05-542	Lid Lifter - Pug Mill Enclosure
1106	RT-06-101	Lid Lifter - Special Waste Enclosure
1105	RT-05-610	Lid Lifter - Sampling Enclosure
1105	RT-05-201	Grout Enclosure Lid Clamp Remover
1105	RT-05-202	Grout Enclosure Lid Clamp Remover

9413227.0103

UNITED ENGINEERS & CONSTRUCTORS A Raytheon Company Western Operations	EQUIPMENT DATA SHEET ☒ CDR ☐ TITLE I ☐ TITLE II ☐ TITLE III	ITEM NUMBER RT-05-522	PAGE 1 OF 1

CUSTOMER & LOCATION	PROJECT	UE&C JOB NO. 6237.006	DATE: 05/12/92
DOE-RL/WHC HANFORD, WA	WRAP FACILITY MODULE 2A	ACCOUNT NO.	BY: SAS

REVISIONS (DATE & BY)	A		B		C		D	
	E		F		G		H	

SERVICE	MANUFACTURER	NO. REQ'D.	SOURCE OF QUOTE
LID REMOVER		1	

DRUM LID REMOVER

CONDITIONS OF SERVICE		DIMENSIONS	
APPLICATION: REMOVE LID FROM DRUM		A:	F:
UNIT LOAD DESCRIPTION: 55 & 85 GAL WASTE DRUM LID		B:	G:
UNIT LOAD SIZE: 26" DIA	DUTY: 8 HOURS/DAY	C:	H:
UNIT LOAD WEIGHT: 10 LBS	NEC AREA CLASS: UNCLASSIFIED	D:	I:
LOCATION: SHREDDER & REPACK ENCLOSURE		E:	J:
CONSTRUCTION			
TYPE OF CONTROL: PNEUMATIC			

9413227.0104

UNITED ENGINEERS & CONSTRUCTORS A Raytheon Company Western Operations	EQUIPMENT DATA SHEET ☒ CDR ☐ TITLE I ☐ TITLE II ☐ TITLE III	ITEM NUMBER RT-05-542	PAGE 1 OF 1

CUSTOMER & LOCATION	PROJECT	UE&C JOB NO. 6237.006	DATE: 06/13/92
DOE-RL/WHC HANFORD, WA	WRAP FACILITY MODULE 2A	ACCOUNT NO.	BY: SAS

REVISIONS (DATE & BY)	A		B		C		D	
	E		F		G		H	

SERVICE	MANUFACTURER	NO. REQ'D.	SOURCE OF QUOTE
LID REMOVAL		1	

DRUM LID REMOVER

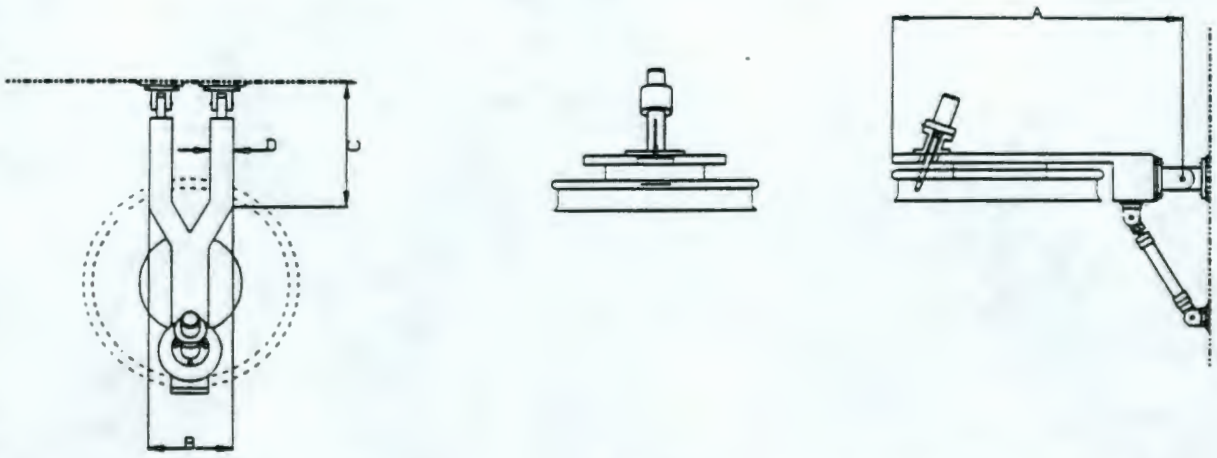

CONDITIONS OF SERVICE		DIMENSIONS	
APPLICATION: REMOVE LID FROM DRUM		A:	F:
UNIT LOAD DESCRIPTION: 55 AND 85 GAL WASTE DRUM LID		B:	G:
UNIT LOAD SIZE: 26" DIA	DUTY: 8 HOURS/DAY	C:	H:
UNIT LOAD WEIGHT: 10 LBS		D:	I:
LOCATION: PUG MILL ENCLOSURE		E:	J:
CONSTRUCTION			
TYPE OF CONTROL: PNEUMATIC			
MATERIAL: CARBON STEEL PAINTED			
ACTUATOR: PNEUM CYLINDER 2" DIA X 8.5" STROKE			
PUNCH: 1" DIA AIR/OIL INTENSIFIER			
MAGNET: 8" DIA PERMANENT MAGNET			
MAGNET REMOVAL: 2" DIA X 1" STROKE PNEUM CYL			
MOUNTING: CLEVIS BRACKET TO GB WALL			

UNITED ENGINEERS & CONSTRUCTORS A Raytheon Company Western Operations	EQUIPMENT DATA SHEET ☒ CDR ☐ TITLE I ☐ TITLE II ☐ TITLE III	ITEM NUMBER RT-06-101	PAGE 1 OF 1

CUSTOMER & LOCATION	PROJECT	UE&C JOB NO. 6237.006	DATE: 05/13/92
DOE-RL/WHC HANFORD, WA	WRAP FACILITY MODULE 2A	ACCOUNT NO.	BY: GBD

REVISIONS (DATE & BY)	A		B		C		D	
	E		F		G		H	

SERVICE	MANUFACTURER	NO. REQ'D.	SOURCE OF QUOTE
LID REMOVAL FIXTURE		1	

DRUM LID REMOVER

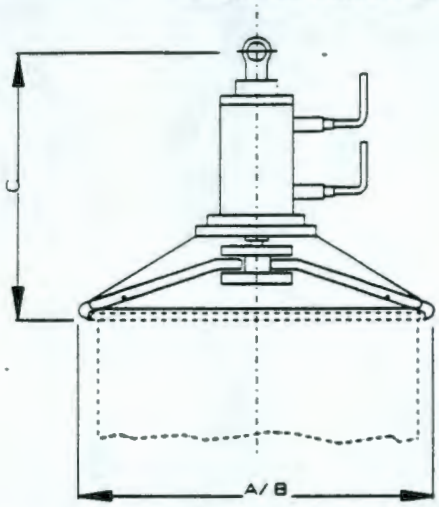

CONDITIONS OF SERVICE		DIMENSIONS	
APPLICATION: REMOVE LID FROM DRUM		A: 32.9"	F:
UNIT LOAD DESCRIPTION: 55 AND 85 GALLON WASTE DRUM LID		B: 9.4"	G:
UNIT LOAD SIZE: 26" DIA	DUTY: 8 HOURS/DAY	C: 14.5"	H:
UNIT LOAD WEIGHT: 10 LBS		D: 2.5"	I:
LOCATION: MERCURY/LEAD ENCLOSURE		E:	J:
CONSTRUCTION			
TYPE OF CONTROL: PNEUMATIC			
MATERIAL: CARBON STEEL PAINTED			
ACTUATOR: PNEUM CYLINDER 2" DIA X 8.5" STROKE			
PUNCH: 1" DIA AIR/OIL INTENSIFIER			
MAGNET: 8" DIA PERMANENT MAGNET			
MAGNET REMOVAL: 2" DIA X 1" STROKE PNEUM CYLINDER			
MOUNTING: CLEVIS BRACKET TO GB WALL			

9413227.0106

UNITED ENGINEERS & CONSTRUCTORS A Raytheon Company Western Operations	EQUIPMENT DATA SHEET ☒ CDR ☐ TITLE I ☐ TITLE II ☐ TITLE III	ITEM NUMBER RT-05-610	PAGE 1 OF 1

CUSTOMER & LOCATION	PROJECT	UE&C JOB NO.	DATE: 05/21/92
DOE-RL/WHC HANFORD, WA	WRAP FACILITY MODULE 2A	6237.006	
		ACCOUNT NO.	BY: VAW

REVISIONS (DATE & BY)	A		B		C		D	
	E		F		G		H	

SERVICE	MANUFACTURER	NO. REQ'D.	SOURCE OF QUOTE
LID REMOVAL		1	

DRUM LID REMOVER

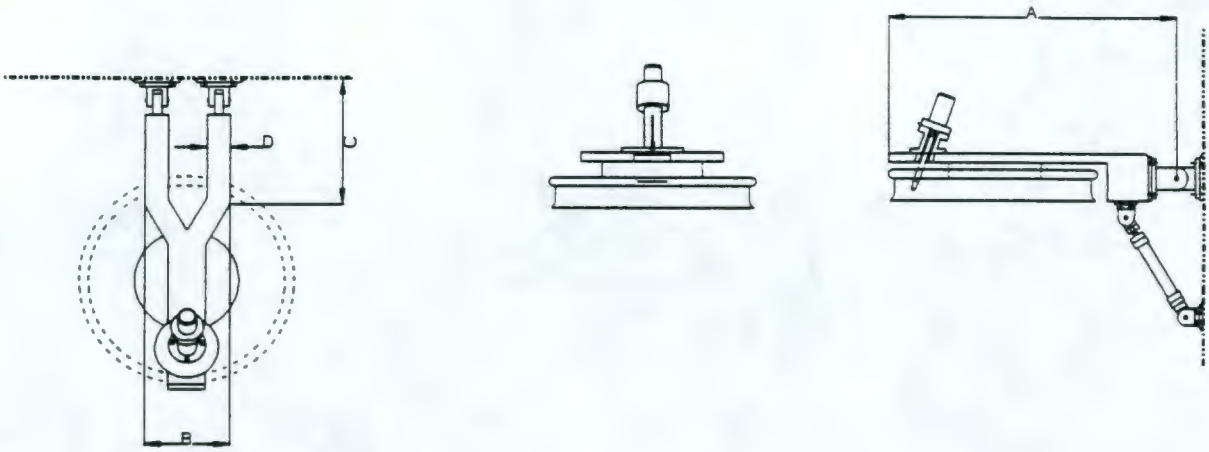

CONDITIONS OF SERVICE		DIMENSIONS	
APPLICATION: REMOVE LID FROM DRUM		A:	F:
UNIT LOAD DESCRIPTION: 55 GAL WASTE DRUM LID		B:	G:
UNIT LOAD SIZE: 26" DIA	DUTY: 8 HRS/DAY	C:	H:
~~UNIT LOAD WEIGHT: 10 LBS~~		D:	I:
LOCATION: SAMPLE MANAGEMENT AREA		E:	J:
CONSTRUCTION			
TYPE OF CONTROL: PNEUMATIC			
MATERIAL: CARBON STEEL PAINTED			
ACTUATOR: PNEUM CYLINDER 1" DIA X 8.5" STROKE			
PUNCH: 1" DIA AIR/OIL INTENSIFIER			
MAGNET: 6" DIA PERMANENT MAGNET			
MAGNET REMOVAL: 2" DIA X 1" STROKE PNEUM CYL			
MOUNTING: CLEVIS BRACKET TO GB WALL			
MATERIAL: 304 SS, 400 SERIES OTHERS			

9413227.0107

UNITED ENGINEERS
& CONSTRUCTORS
A Raytheon Company

Western Operations

CUSTOMER: DOE-RL/WHC
PROJECT: WRAP FACILITY MODULE 2A
LOCATION: HANFORD, WA

ITEM NO.: RT-05-201
ACCT.:
UE&C JOB: 6237.006
PAGE: 1 OF 1
DATE: 05/20/92 BY: SMM

SERVICE: GROUT ENCLOSURE LID CLAMP REMOVER
NO. REQ'D.:
REVISIONS: A BY B BY C BY D BY
MANUFACTURER: MODEL: SIZE: TYPE:
SOURCE: QUOTATION NO.: DATE:

MECHANICAL LINKAGE TO BE USED BY OPERATOR TO MANUALLY RELEASE (SNAP TYPE) LID CLAMPS

UNIT LOAD WEIGHT:	**< 2 LBS**
UNIT LOAD SIZE:	**22.5" DIA X 34.5" WIDE**
UNIT LOAD DESCRIPTION:	**55 GALLON DRUMS (LID CLAMPS)**

9413227.0108

G:\BECKY\WP51\WRAP\R505201.RV0

UNITED ENGINEERS & CONSTRUCTORS
A Raytheon Company

Western Operations

CUSTOMER: DOE-RL/WHC
PROJECT: WRAP FACILITY MODULE 2A
LOCATION: HANFORD, WA

ITEM NO.: RT-05-202
ACCT.:
UE&C JOB: 6237.006
PAGE: 1 OF 1
DATE: 05/20/92 BY: SMM

SERVICE: GROUT ENCLOSURE LID CLAMP REMOVER NO. REQ'D.:
REVISIONS: A BY B BY C BY D BY
MANUFACTURER: MODEL: SIZE: TYPE:
SOURCE: QUOTATION NO.: DATE:

MECHANICAL LINKAGE TO BE USED BY OPERATOR TO MANUALLY RELEASE (SNAP TYPE) LID CLAMPS

UNIT LOAD WEIGHT:	**< 2 LBS**
UNIT LOAD SIZE:	**22.5" DIA X 34.5" WIDE**
UNIT LOAD DESCRIPTION:	**55 GALLON DRUMS (LID CLAMPS)**

9413227.0109

SECTION 11503

PW 3227.0110

THIS PAGE INTENTIONALLY
LEFT BLANK

THIS PAGE INTENTIONALLY
LEFT BLANK

WRAP MODULE 2A

SPECIFICATION SECTION
FOR
11503 MANIPULATORS

TABLE OF CONTENTS

PART 1 GENERAL

1.01 SECTION SCOPE
1.02 RELATED SECTIONS
1.03 REFERENCES
1.04 SYSTEM DESCRIPTION
1.05 SUBMITTALS
1.06 DELIVERY, STORAGE AND HANDLING
1.07 SITE CONDITIONS

PART 2 PRODUCTS

2.01 MANUFACTURERS
2.02 MATERIALS
2.03 EQUIPMENT
2.04 COMPONENTS
2.05 FABRICATION
2.06 SHOP QUALITY CONTROL

PART 3 EXECUTION

3.01 PREPARATION
3.02 ERECTION, INSTALLATION AND APPLICATION
3.03 FIELD QUALITY CONTROL
3.04 ADJUSTING AND CLEANING
3.05 DEMONSTRATION
3.06 PROTECTION

APPENDIX

APPENDIX A DATA SHEETS

WRAP MODULE 2A

SECTION 11503

MANIPULATORS

PART 1 GENERAL

1.01 SECTION SCOPE

A. This specification establishes the requirements for detailed design, fabrication, installation, start-up and acceptance testing of remote manipulators within WRAP 2A.

1.02 RELATED SECTIONS

1.03 REFERENCES

A. American National Standards Institute (ANSI)

B. American Society for Testing and Materials (ASTM)

C. National Electric Code (NEC)

D. American Welding Society (AWS)
AWS D1.1 "Structural Welding Code"

E. National Electrical Manufacturers Association (NEMS)
NEMA MG-1 Motors and Generators

1.04 SYSTEM DESCRIPTION

A. The manipulators within WRAP 2A provide the following functions:

- Sort and handle light weight waste
- Size reduce sort and transport heavy waste

B. General Description

<u>Light Manipulators</u>

a. Light manipulators are mounted inside process enclosures and are used to sort and remove waste from the enclosure which is not suitable for further processing. The manipulators are provided in pairs and are mounted on horizontal sliding carrages to provide a wider work envelope covered by the manipulator.

9413227.0112

Power Manipulator

b. A power manipulator is included in the box breakdown cell to carry out size reduction and transportation of large waste items. The power manipulator is mounted on a travelling overhead bridge and carrage and a telescopic mast. This allows the power manipulator to be deployed at any position within the box breakdown cell. The power manipulator interfaces with a tool change facility to allow a variety of tools to be used by the manipulator. The travelling overhead bridge and carrage is coverd by the crane and moist specification.

C. Construction

The carrage for the light manipulator is constructed of painted carbon steel. The light manipulator is constructed of titanium. The overhead bridge and carrage for the power manipulator is constructed of painted carbon steel. The power manipulator is constructed of titanium.

D. Control and Instrumentation

1. The light manipulators are operated and controlled manually.

2. The power manipulator is operated manually. The power manipulator drives will be interfaced with control and safety interlocks to ensure it does not clash with other equipment.

D. Data Sheets

Equipment Tag Nos., WBS Area Location Numbers and equipment data sheets for this description are provided in **Appendix A.**

END OF SECTION

WRAP MODULE 2A

APPENDIX A

EQUIPMENT/INSTRUMENT DATA SHEETS

WBS LOCATION	EQUIPMENT TAG	SERVICE
1105	EM-05-521A,B	Light Manipulators - Shredder and Repack Enclosure
1105	EM-05-541	Light Manipulators - Pug Mill Enclosure
1106	EM-06-101	Light Manipulators - Special Waste Enclosure
1105	EM-05-603	Light Manipulators - Sample Enclosure
1105	EM-05-561	Power Manipulators - Box Breakdown Cell

9413227.0114

UNITED ENGINEERS & CONSTRUCTORS A Raytheon Company Western Operations	EQUIPMENT DATA SHEET ☒ CDR ☐ TITLE I ☐ TITLE II ☐ TITLE III	ITEM NUMBER EM-05-521A,B	PAGE 1 OF 2

CUSTOMER & LOCATION	PROJECT	UE&C JOB NO. 6237.006	DATE: 04/13/92
DOE-RL/WHC HANFORD, WA	WRAP FACILITY MODULE 2A	ACCOUNT NO.	BY: SAS

REVISIONS (DATE & BY)	A		B		C		D	
	E		F		G		H	

SERVICE	MANUFACTURER	NO. REQ'D.	SOURCE OF QUOTE
WASTE SORTING MANIPULATOR		2	

MANIPULATOR CARRIAGE

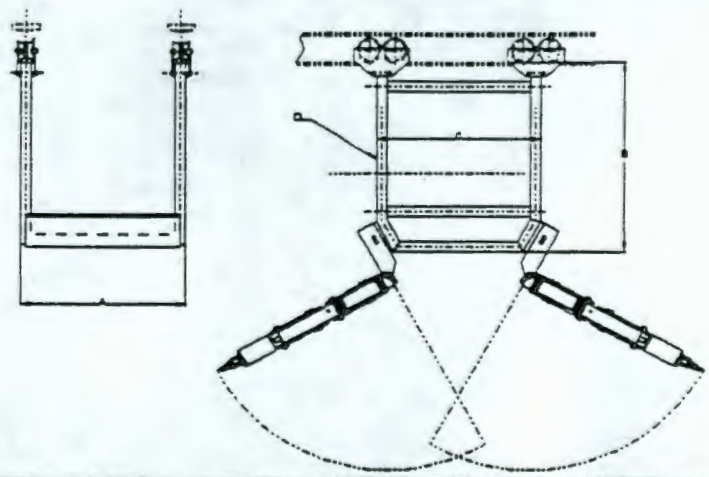

CONDITIONS OF SERVICE		DIMENSIONS	
APPLICATION: REMOTE WASTE SORTING		A: 2'-8"	F:
UNIT LOAD DESCRIPTION: TWO HV6F MANIPULATORS		B: 3'-1"	G:
UNIT LOAD SIZE: SEE SHEET 2	DUTY: 8 HRS/DAY	C: 2'-8"	H:
UNIT LOAD WEIGHT: 44 LBS + 120 LBS + CARRIAGE		D: 2"X2"	I:
LOCATION: SHREDDER & REPACK PROCESS ENCL.		E:	J:
RATED CAPACITY: 60 LBS + 150%			
CONSTRUCTION			
DRIVE: ELECTRIC MOTOR (TRAVERSE)			
MATERIAL: 2" X 2" RHS			
CARRIAGE: WHEEL ASSY (40 FF)			

9413227.0115

UNITED ENGINEERS & CONSTRUCTORS A Raytheon Company Western Operations	EQUIPMENT DATA SHEET ☒ CDR ☐ TITLE I ☐ TITLE II ☐ TITLE III	ITEM NUMBER EM-05-521A,B	PAGE 2 OF 2

CUSTOMER & LOCATION	PROJECT	UE&C JOB NO. 6237.006	DATE: 04/13/9
DOE-RL/WHC HANFORD, WA	WRAP FACILITY MODULE 2A	ACCOUNT NO.	BY: SAS

REVISIONS (DATE & BY)	A		B		C		D	
	E		F		G		H	

SERVICE	MANUFACTURER	NO. REQ'D.	SOURCE OF QUOTE
WASTE SORTING MANIPULATOR		2 PAIRS	

MANIPULATOR

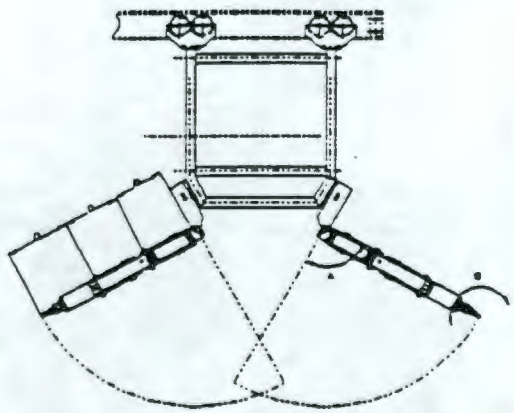

CONDITIONS OF SERVICE		DIMENSIONS	
APPLICATION: REMOTE WASTE SORTING		A: 90°	F:
UNIT LOAD DESCRIPTION: LLRMW WASTE FROM 55 AND 85 GALLON DRUMS		B: 11"	G:
UNIT LOAD SIZE: 10" X 6" X 28" MAXIMUM	DUTY: 8 HRS/DAY	C: 1'-0"	H:
UNIT LOAD WEIGHT: 60 LBS MAXIMUM		D: 1'-2"	I:
LOCATION: SHREDDER & REPACK PROCESS ENCL.		E: 360°	J:
RATED CAPACITY: 60 LBS AT FULL EXTENSION			
CONSTRUCTION			
MATERIAL: TITANIUM			
REQUIREMENTS: DUAL MOUNTED MANIPULATOR			
REQUIREMENTS: CONSOLE WITH DUAL OPS LEVERS			
OPERATION: REMOTE DISCONNECTION			
END EFFECTOR: REPLACEABLE TOOLS			
END EFFECTOR:			

9413227.0116

UNITED ENGINEERS & CONSTRUCTORS A Raytheon Company Western Operations	EQUIPMENT DATA SHEET ☒ CDR ☐ TITLE I ☐ TITLE II ☐ TITLE III	ITEM NUMBER EM-05-541	PAGE 1 OF 2

CUSTOMER & LOCATION	PROJECT	UE&C JOB NO. 6237.006	DATE: 04/21/92
DOE-RL/WHC HANFORD, WA	WRAP FACILITY MODULE 2A	ACCOUNT NO.	BY: SAS

REVISIONS (DATE & BY)	A		B		C		D	
	E		F		G		H	

SERVICE	MANUFACTURER	NO. REQ'D.	SOURCE OF QUOTE
WASTE SORTING MANIPULATOR		1	

MANIPULATOR CARRIAGE

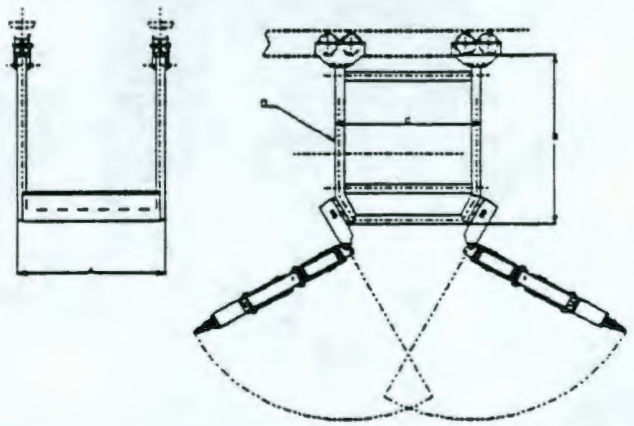

CONDITIONS OF SERVICE		DIMENSIONS	
APPLICATION: REMOTE WASTE SORTING		A: 2'-8"	F:
UNIT LOAD DESCRIPTION: TWO HV6F MANIPULATORS		B: 3'-1"	G:
UNIT LOAD SIZE: SEE SHEET 2	DUTY: 8 HOURS/DAY	C: 2'-8"	H:
UNIT LOAD WEIGHT: 44 LBS + 120 LBS + CARRIAGE		D: 2"X2"	I:
LOCATION: PUG MILL ENCLOSURE		E:	J:
RATED CAPACITY: 60 LBS + 150%			
CONSTRUCTION			
DRIVE: ELECTRIC MOTOR (TRAVERSE)			
MATERIAL: 2" X 2" RHS			
CARRIAGE: WHEEL ASSY (40 FF)			

9413227.0117

UNITED ENGINEERS & CONSTRUCTORS A Raytheon Company Western Operations	EQUIPMENT DATA SHEET ☒ CDR ☐ TITLE I ☐ TITLE II ☐ TITLE III	ITEM NUMBER EM-05-541	PAGE 2 OF 2

CUSTOMER & LOCATION	PROJECT	UE&C JOB NO. 6237.006	DATE: 04/21/
DOE-RL/WHC HANFORD, WA	WRAP FACILITY MODULE 2A	ACCOUNT NO.	BY: RLH

REVISIONS (DATE & BY)	A		B		C		D	
	E		F		G		H	

SERVICE	MANUFACTURER	NO. REQ'D.	SOURCE OF QUOTE
WASTE SORTING MANIPULATOR		1	

MANIPULATOR

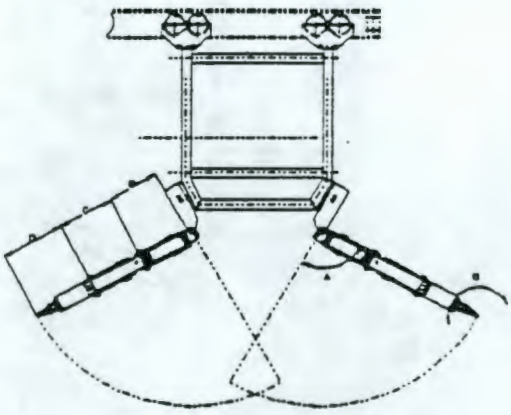

CONDITIONS OF SERVICE		DIMENSIONS	
APPLICATION: REMOTE WASTE SORTING		A: 90°	F:
UNIT LOAD DESCRIPTION: LLRMW WASTE FROM 55 AND 85 GALLON DRUMS		B: 11"	G:
UNIT LOAD SIZE: 10" X 6" X 28" MAXIMUM	DUTY: 8 HOURS/DAY	C: 1'-0"	H:
UNIT LOAD WEIGHT: 60 LBS MAXIMUM		D: 1'-2"	I:
LOCATION: PUG MILL ENCLOSURE		E: 360°	J:
RATED CAPACITY: 60 LBS AT FULL EXTENSION			
CONSTRUCTION			
MATERIAL: TITANIUM			
REQUIREMENTS: DUAL MOUNTED MANIPULATOR			
REQUIREMENTS: CONSOLE WITH DUAL OPS LEVERS			
OPERATION: REMOTE DISCONNECTION			
END EFFECTOR: REPLACEABLE TOOLS			
END EFFECTOR:			

9413227.0118

UNITED ENGINEERS & CONSTRUCTORS A Raytheon Company Western Operations	EQUIPMENT DATA SHEET ☒ CDR ☐ TITLE I ☐ TITLE II ☐ TITLE III	ITEM NUMBER EM-05-561	PAGE 1 OF 2

CUSTOMER & LOCATION	PROJECT	UE&C JOB NO. 6237.006	DATE: 06/14/92
DOE-RL/WHC HANFORD, WA	WRAP FACILITY MODULE 2A	ACCOUNT NO.	BY: SAS

REVISIONS (DATE & BY)	A		B		C		D	
	E		F		G		H	

SERVICE	MANUFACTURER	NO. REQ'D.	SOURCE OF QUOTE
POWER MANIPULATOR		1	

MANIPULATOR

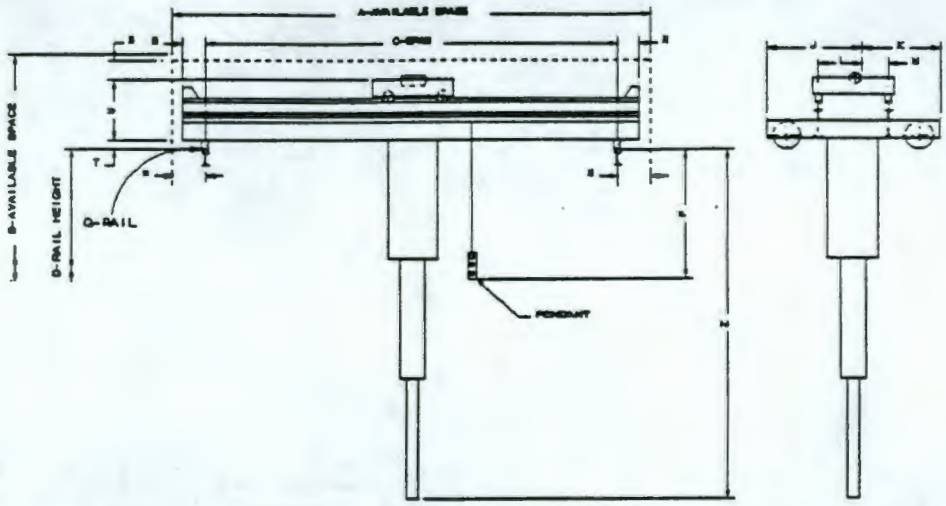

CONDITIONS OF SERVICE		DIMENSIONS	
APPLICATION: DEPLOY POWER MANIPULATOR WITHIN BOX BREAKDOWN CELL		A: 2'-8"	F:
UNIT LOAD DESCRIPTION: POWER MANIPULATOR		B: 3'-1"	G:
UNIT LOAD SIZE: SEE SHEET 2		C: 2'-8"	H:
UNIT LOAD WEIGHT: 147 LB MANIPULATOR + 250 LB WASTE		D: 2"X2"	I:
LOCATION: BOX BREAKDOWN CELL		E:	J:
RATED CAPACITY: 1 TON			
CONSTRUCTION			
DRIVE: ELECTRIC			
WEIGHT:			

9113227.0119

UNITED ENGINEERS & CONSTRUCTORS A Raytheon Company Western Operations	EQUIPMENT DATA SHEET ☒ CDR ☐ TITLE I ☐ TITLE II ☐ TITLE III	ITEM NUMBER EM-05-561	PAGE 2 OF 2

CUSTOMER & LOCATION	PROJECT	UE&C JOB NO. 6237.006	DATE: 05/14/
DOE-RL/WHC HANFORD, WA	WRAP FACILITY MODULE 2A	ACCOUNT NO.	BY: SAS

REVISIONS (DATE & BY)	A		B		C		D	
	E		F		G		H	

SERVICE	MANUFACTURER	NO. REQ'D.	SOURCE OF QUOTE
POWER MANIPULATOR		1	

MANIPULATOR

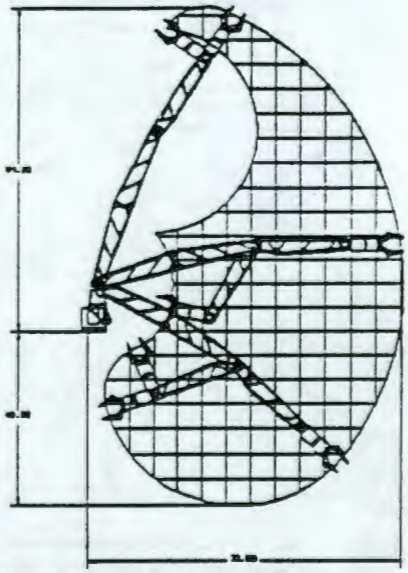

CONDITIONS OF SERVICE		DIMENSIONS	
APPLICATION: SIZE REDUCTION AND TRANSPORTATION OF WASTE WITHIN THE BOX BREAKDOWN CELL		A:	F:
UNIT LOAD DESCRIPTION: LLRMW FROM BOXES		B:	G:
UNIT LOAD SIZE: 2' X 2' X 1'	DUTY: 8 HOURS/DAY	C:	H:
UNIT LOAD WEIGHT: 250 LBS		D:	I:
LOCATION: BOX BREAKDOWN CELL		E:	J:
RATED CAPACITY: 250 LBS AT FULL EXTENSION			
CONSTRUCTION			
MATERIAL: TITANIUM			
POWER: HYDRAULIC - 3,000 PIS			
ELECTRICAL: 25 WATS AT 120/240 VAC			
WEIGHT: 147 LBS			

9413227.0120

UNITED ENGINEERS & CONSTRUCTORS A Raytheon Company Western Operations	EQUIPMENT DATA SHEET ☒ CDR ☐ TITLE I ☐ TITLE II ☐ TITLE III	ITEM NUMBER EM-05-603	PAGE 1 OF 2

CUSTOMER & LOCATION	PROJECT	UE&C JOB NO. 6237.006	DATE: 05/21/92
DOE-RL/WHC HANFORD, WA	WRAP FACILITY MODULE 2A	ACCOUNT NO.	BY: VAW

REVISIONS (DATE & BY)	A		B		C		D	
	E		F		G		H	

SERVICE	MANUFACTURER	NO. REQ'D.	SOURCE OF QUOTE
WASTE SORTING MANIPULATOR		2	

MANIPULATOR CARRIAGE

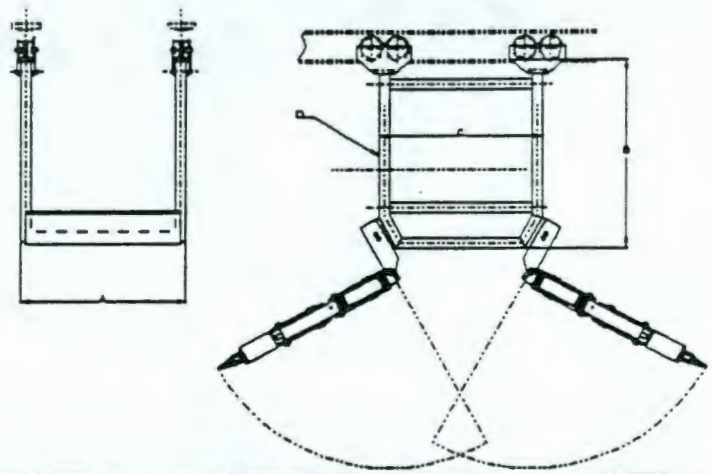

CONDITIONS OF SERVICE		DIMENSIONS	
APPLICATION: REMOTE WASTE SAMPLE EXTRACTION		A: 2'-8"	F:
UNIT LOAD DESCRIPTION: TWO HV6F MANIPULATORS		B: 3'-1"	G:
UNIT LOAD SIZE: SEE SHEET 2	DUTY: 8 HRS/DAY	C: 2'-8"	H:
UNIT LOAD WEIGHT: 44 LBS + 120 LBS + CARRIAGE		D: 2"X2"	I:
LOCATION: SHREDDER & REPACK PROCESS ENCL.		E:	J:
RATED CAPACITY: 60 LBS + 150%			
CONSTRUCTION			
DRIVE: ELECTRIC MOTOR (TRAVERSE)			
MATERIAL: 2" X 2" RHS			
CARRIAGE: WHEEL ASSY (40 FF)			

9413227.0121

UNITED ENGINEERS & CONSTRUCTORS A Raytheon Company Western Operations	EQUIPMENT DATA SHEET ☒ CDR ☐ TITLE I ☐ TITLE II ☐ TITLE III	ITEM NUMBER EM-05-603	PAGE 2 OF 2

CUSTOMER & LOCATION	PROJECT	UE&C JOB NO. 6237.006	DATE: 05/21/
DOE-RL/WHC HANFORD, WA	WRAP FACILITY MODULE 2A	ACCOUNT NO.	BY: VAW

REVISIONS (DATE & BY)	A		B		C		D	
	E		F		G		H	

SERVICE	MANUFACTURER	NO. REQ'D.	SOURCE OF QUOTE
WASTE SORTING MANIPULATOR		2 PAIRS	

MANIPULATOR

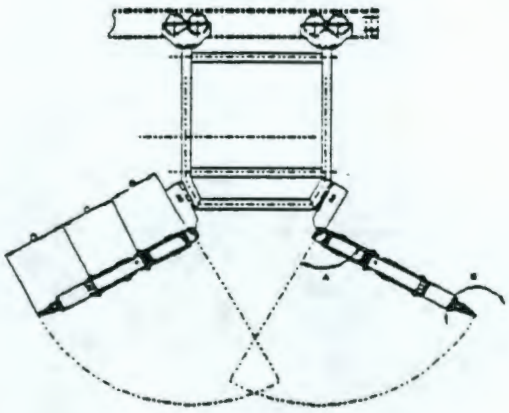

CONDITIONS OF SERVICE		DIMENSI	
APPLICATION: REMOTE WASTE SORTING		A: 90°	F:
UNIT LOAD DESCRIPTION: LLRMW WASTE FROM 55 AND 85 GALLON DRUMS		B: 11"	G:
UNIT LOAD SIZE: 10" X 6" X 28" MAXIMUM	DUTY: 8 HRS/DAY	C: 1'-0"	H:
UNIT LOAD WEIGHT: 60 LBS MAXIMUM		D: 1'-2"	I:
LOCATION: SHREDDER & REPACK PROCESS ENCL.		E: 360°	J:
RATED CAPACITY: 60 LBS AT FULL EXTENSION			
CONSTRUCTION			
MATERIAL: TITANIUM			
REQUIREMENTS: DUAL MOUNTED MANIPULATOR			
REQUIREMENTS: CONSOLE WITH DUAL OPS LEVERS			
OPERATION: REMOTE DISCONNECTION			
END EFFECTOR: REPLACEABLE TOOLS			
END EFFECTOR:			

9413227.0122

UNITED ENGINEERS & CONSTRUCTORS A Raytheon Company Western Operations	EQUIPMENT DATA SHEET ☒ CDR ☐ TITLE I ☐ TITLE II ☐ TITLE III	ITEM NUMBER EM-06-101	PAGE 1 OF 2

CUSTOMER & LOCATION	PROJECT	UE&C JOB NO. 6237.006	DATE: 04/21/92
DOE-RL/WHC HANFORD, WA	WRAP FACILITY MODULE 2A	ACCOUNT NO.	BY: RLH

REVISIONS (DATE & BY)	A		B		C		D	
	E		F		G		H	

SERVICE	MANUFACTURER	NO. REQ'D.	SOURCE OF QUOTE
SORTING MANIPULATOR		1	

MANIPULATOR CARRIAGE

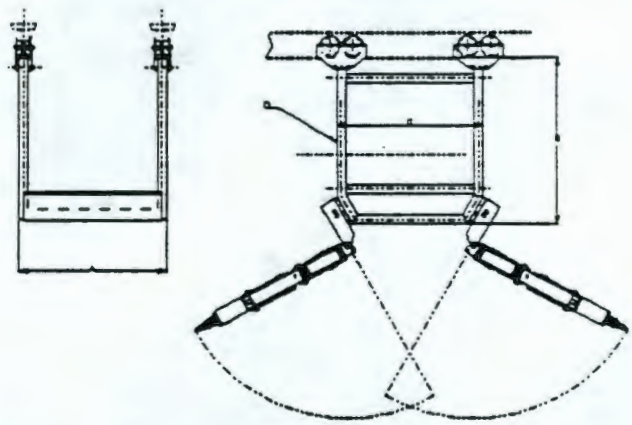

CONDITIONS OF SERVICE		DIMENSIONS	
APPLICATION: REMOTE WASTE SORTING		A: 2'-8"	F:
UNIT LOAD DESCRIPTION: TWO HV6F MANIPULATORS		B: 3'-1"	G:
UNIT LOAD SIZE: SEE SHEET 2	DUTY: 8 HOURS/DAY	C: 2'-8"	H:
UNIT LOAD WEIGHT: 44 LBS + 120 LBS + CARRIAGE		D: 2"X2"	I:
LOCATION: SPECIAL WASTE ENCL		E:	J:
RATED CAPACITY: 60 LBS + 150%			
CONSTRUCTION			
DRIVE: ELECTRIC MOTOR (TRAVERSE)			
MATERIAL: 2" X 2" RHS			
CARRIAGE: WHEEL ASSY (40 FF)			

9413227.0123

UNITED ENGINEERS & CONSTRUCTORS A Raytheon Company Western Operations	EQUIPMENT DATA SHEET ☒ CDR ☐ TITLE I ☐ TITLE II ☐ TITLE III	ITEM NUMBER EM-06-101	PAGE 2 OF 2

CUSTOMER & LOCATION	PROJECT	UE&C JOB NO. 6237.006	DATE: 04/21/9
DOE-RL/WHC HANFORD, WA	WRAP FACILITY MODULE 2A	ACCOUNT NO.	BY: RLH

REVISIONS (DATE & BY)	A		B		C		D	
	E		F		G		H	

SERVICE	MANUFACTURER	NO. REQ'D.	SOURCE OF QUOTE
SORTING MANIPULATOR		1	

MANIPULATOR

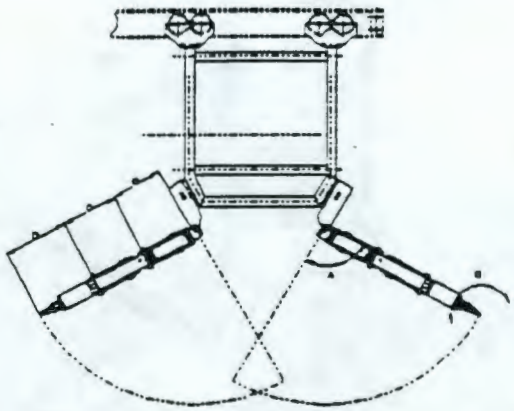

CONDITIONS OF SERVICE		DIMENSIONS	
APPLICATION: REMOTE WASTE SORTING		A: 90°	F:
UNIT LOAD DESCRIPTION: PACKETED WASTE (FLASKS BRICKS, ETC.)		B: 11	G:
UNIT LOAD SIZE: 10" X 6" X 28" MAXIMUM	DUTY: 8 HOURS/DAY	C: 1'-0"	H:
UNIT LOAD WEIGHT: 60 LBS MAXIMUM		D: 1'-2"	I:
LOCATION: SPECIAL WASTE ENCL		E: 360°	J:
RATED CAPACITY: 60 LBS AT FULL EXTENSION			
SAW FORCE: 200 LBS			
CONSTRUCTION			
MATERIAL: TITANIUM			
REQUIREMENTS: DUAL MOUNTED MANIPULATOR			
REQUIREMENTS: CONSOLE WITH DUAL OPS LEVERS			
OPERATION: HYDRAULIC			
END EFFECTOR: REPLACEABLE TOOLS			
END EFFECTOR: REMOTE DISCONNECTION			
HPU POWER: 3 HP			

9413227.0124

UNITED ENGINEERS & CONSTRUCTORS A Raytheon Company Western Operations	EQUIPMENT DATA SHEET ☒ CDR ☐ TITLE I ☐ TITLE II ☐ TITLE III	ITEM NUMBER EM-05-541	PAGE 2 OF 2

CUSTOMER & LOCATION	PROJECT	UE&C JOB NO. 6237.006	DATE: 04/21/92
DOE-RL/WHC HANFORD, WA	WRAP FACILITY MODULE 2A	ACCOUNT NO.	BY: RLH

REVISIONS (DATE & BY)	A		B		C		D	
	E		F		G		H	

SERVICE	MANUFACTURER	NO. REQ'D.	SOURCE OF QUOTE
WASTE SORTING MANIPULATOR		1	

MANIPULATOR

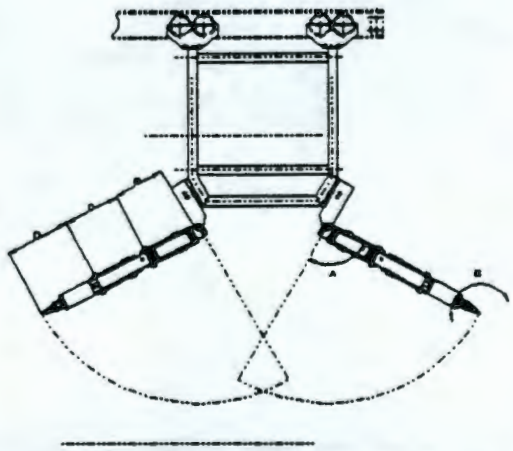

CONDITIONS OF SERVICE		DIMENSIONS	
APPLICATION: REMOTE WASTE SORTING		A: 90°	F:
UNIT LOAD DESCRIPTION: LLRMW WASTE FROM 55 AND 85 GALLON DRUMS		B: 11"	G:
UNIT LOAD SIZE: 10" X 6" X 28" MAXIMUM	DUTY: 8 HOURS/DAY	C: 1'-0"	H:
UNIT LOAD WEIGHT: 60 LBS MAXIMUM		D: 1'-2"	I:
LOCATION: PUG MILL ENCLOSURE		E: 360°	J:
RATED CAPACITY: 60 LBS AT FULL EXTENSION			
CONSTRUCTION			
MATERIAL: TITANIUM			
REQUIREMENTS: DUAL MOUNTED MANIPULATOR			
REQUIREMENTS: CONSOLE WITH DUAL OPS LEVERS			
OPERATION: REMOTE DISCONNECTION			
END EFFECTOR: REPLACEABLE TOOLS			
END EFFECTOR:			

9413227.0125

UNITED ENGINEERS & CONSTRUCTORS A Raytheon Company Western Operations	EQUIPMENT DATA SHEET ☒ CDR ☐ TITLE I ☐ TITLE II ☐ TITLE III	ITEM NUMBER EM-05-603	PAGE 1 OF 2

CUSTOMER & LOCATION	PROJECT	UE&C JOB NO. 6237.006	DATE: 05/21/92
DOE-RL/WHC HANFORD, WA	WRAP FACILITY MODULE 2A	ACCOUNT NO.	BY: VAW

REVISIONS (DATE & BY)	A		B		C		D	
	E		F		G		H	

SERVICE	MANUFACTURER	NO. REQ'D.	SOURCE OF QUOTE
WASTE SORTING MANIPULATOR		2	

MANIPULATOR CARRIAGE

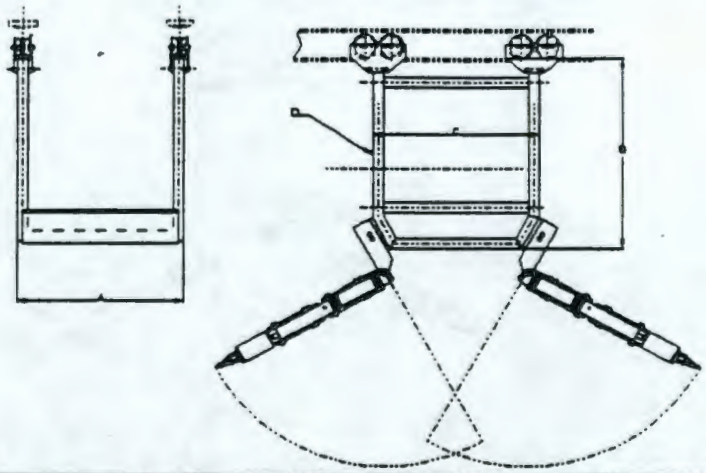

CONDITIONS OF SERVICE		DIMENSIONS	
APPLICATION: REMOTE WASTE SAMPLE EXTRACTION		A: 2'-8"	F:
UNIT LOAD DESCRIPTION: TWO HV6F MANIPULATORS		B: 3'-1"	G:
UNIT LOAD SIZE: SEE SHEET 2	DUTY: 8 HRS/DAY	C: 2'-8"	H:
UNIT LOAD WEIGHT: 44 LBS + 120 LBS + CARRIAGE		D: 2"X2"	I:
LOCATION: SHREDDER & REPACK PROCESS ENCL.		E:	J:
RATED CAPACITY: 60 LBS + 150%			
CONSTRUCTION			
DRIVE: ELECTRIC MOTOR (TRAVERSE)			
MATERIAL: 2" X 2" RHS			
CARRIAGE: WHEEL ASSY (40 FF)			

UNITED ENGINEERS & CONSTRUCTORS A Raytheon Company Western Operations	EQUIPMENT DATA SHEET ☒ CDR ☐ TITLE I ☐ TITLE II ☐ TITLE III	ITEM NUMBER EM-05-603	PAGE 2 OF 2

CUSTOMER & LOCATION	PROJECT	UE&C JOB NO. 6237.006	DATE: 05/21/92
DOE-RL/WHC HANFORD, WA	WRAP FACILITY MODULE 2A	ACCOUNT NO.	BY: VAW

REVISIONS (DATE & BY)	A		B		C		D	
	E		F		G		H	

SERVICE	MANUFACTURER	NO. REQ'D.	SOURCE OF QUOTE
WASTE SORTING MANIPULATOR		2 PAIRS	

MANIPULATOR

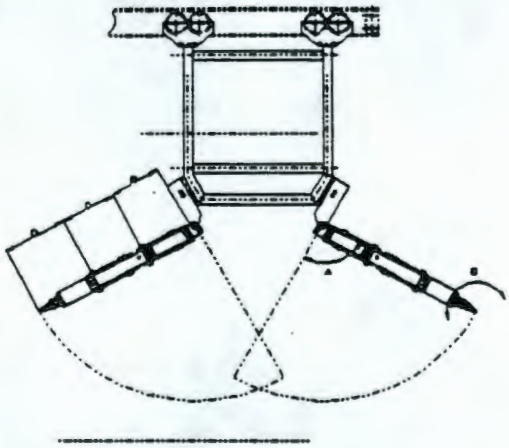

CONDITIONS OF SERVICE		DIMENSIONS	
APPLICATION: REMOTE WASTE SORTING		A: 90°	F:
UNIT LOAD DESCRIPTION: LLRMW WASTE FROM 55 AND 85 GALLON DRUMS		B: 11"	G:
UNIT LOAD SIZE: 10" X 6" X 28" MAXIMUM	DUTY: 8 HRS/DAY	C: 1'-0"	H:
UNIT LOAD WEIGHT: 60 LBS MAXIMUM		D: 1'-2"	I:
LOCATION: SHREDDER & REPACK PROCESS ENCL.		E: 360°	J:
RATED CAPACITY: 60 LBS AT FULL EXTENSION			
CONSTRUCTION			
MATERIAL: TITANIUM			
REQUIREMENTS: DUAL MOUNTED MANIPULATOR			
REQUIREMENTS: CONSOLE WITH DUAL OPS LEVERS			
OPERATION: REMOTE DISCONNECTION			
END EFFECTOR: REPLACEABLE TOOLS			
END EFFECTOR:			

9413227.0127

WRAP MODULE 2A

SECTION

PART 1 GENERAL

1.01 SECTION SCOPE

A. This specification establishes the requirements for detailed design, fabrication, installation, start-up, and acceptance testing of remote manipulators within WRAP 2A.

1.02 RELATED SECTIONS

A. Section
B. Section

1.03 REFERENCES

A. Material Specs.

B. American National Standards Institute (ANSI)

C. American Society for Testing and Materials (ASTM)

D. National Electric Code (NEC)

E. AWS D1.1 "Structural Welding Code"

F. NEMA MG-1 Motors and Generators

1.04 SYSTEM DESCRIPTION

A. The manipulators within WRAP 2A provide the following functions:

a. Sort and handle light weight waste
b. Size reduce sort and transport heavy waste

B. GENERAL DESCRIPTION

<u>Light Manipulators</u>

a. Light manipulators are mounted inside process enclosures and are used to sort and remove waste from the enclosure which is not suitable for further processing. The manipulators are provided in pairs

9413227.0128

and are mounted on horizontal sliding carrages to provide a wider work envelope covered by the manipulator.

Power Manipulator

b. A power manipulator is included in the box breakdown cell to carry out size reduction and transportation of large waste items. The power manipulator is mounted on a travelling overhead bridge and carrage and a telescopic mast. This allows the power manipulator to be deployed at any position within the box breakdown cell. The power manipulator interfaces with a tool change facility to allow a variety of tools to be used by the manipulator. The travelling overhead bridge and carrage is coverd by the crane and moist specification.

C. CONSTRUCTION

The carrage for the light manipulator is constructed of painted carbon steel. The light manipulator is constructed of titanium. The overhead bridge and carrage for the power manipulator is constructed of painted carbon steel. The power manipulator is constructed of titanium.

D. CONTROL AND INSTRUMENTATION

The light manipulators are operated and controlled manually.

The power manipulator is operated manually. The power manipulator drives will be interfaced with control and safety interlocks to ensure it does not clash with other equipment.

DATA SHEETS

Equipment Tag Nos. WBS Area Location Numbers and equipment data sheets for this description are provided in **Appendix A.**

9H4227.0129

WRAP MODULE 2A

APPENDIX A

EQUIPMENT/INSTRUMENT DATA SHEETS

WBS LOCATION	EQUIPMENT TAG	SERVICE
1105	EM-05-521 AB	Light Manipulators - Shredder and Repack Enclosure
1105	EM-05-541	Light Manipulators - Pug Mill Enclosure
1106	EM-06-101	Light Manipulators - Special Waste Enclosure
1105	EM-05-603	Light Manipulators - Sample Enclosure
1105	EM-05-561	Power Manipulators - Box Breakdown cell

9413227.0130

APRIL 1992
FILE NO. 11503

UE&C PROJECT NO. 6237.006

WRAP MODULE 2A

END OF SECTION

9413227.0131

UNITED ENGINEERS & CONSTRUCTORS A Raytheon Company Western Operations	EQUIPMENT DATA SHEET ☒ CDR ☐ TITLE I ☐ TITLE II ☐ TITLE III	ITEM NUMBER EM-05-521A,B	PAGE 1 OF 2

CUSTOMER & LOCATION	PROJECT	UE&C JOB NO. 6237.006	DATE: 04/13/92
DOE-RL/WHC HANFORD, WA	WRAP FACILITY MODULE 2A	ACCOUNT NO.	BY: SAS

REVISIONS (DATE & BY)	A		B		C		D	
	E		F		G		H	

SERVICE	MANUFACTURER	NO. REQ'D.	SOURCE OF QUOTE
WASTE SORTING MANIPULATOR		2	

MANIPULATOR CARRIAGE

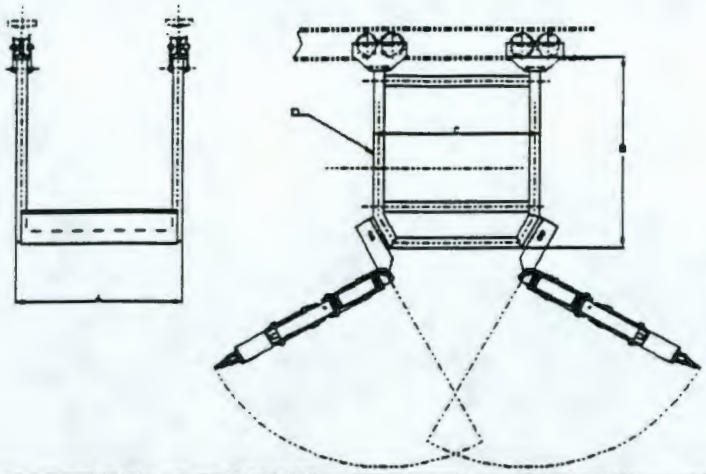

CONDITIONS OF SERVICE		DIMENSIONS	
APPLICATION: REMOTE WASTE SORTING		A: 2'-8"	F:
UNIT LOAD DESCRIPTION: TWO HV6F MANIPULATORS		B: 3'-1"	G:
UNIT LOAD SIZE: SEE SHEET 2	DUTY: 8 HRS/DAY	C: 2'-8"	H:
UNIT LOAD WEIGHT: 44 LBS + 120 LBS + CARRIAGE		D: 2"X2"	I:
LOCATION: SHREDDER & REPACK PROCESS ENCL.		E:	J:
RATED CAPACITY: 60 LBS + 150%			
CONSTRUCTION			
DRIVE: ELECTRIC MOTOR (TRAVERSE)			
MATERIAL: 2" X 2" RHS			
CARRIAGE: WHEEL ASSY (40 FF)			

UNITED ENGINEERS & CONSTRUCTORS A Raytheon Company Western Operations	EQUIPMENT DATA SHEET ☒ CDR ☐ TITLE I ☐ TITLE II ☐ TITLE III	ITEM NUMBER EM-05-561	PAGE 2 OF 2

CUSTOMER & LOCATION	PROJECT	UE&C JOB NO. 6237.006	DATE: 05/14/92
DOE-RL/WHC HANFORD, WA	WRAP FACILITY MODULE 2A	ACCOUNT NO.	BY: SAS

REVISIONS (DATE & BY)	A		B		C		D	
	E		F		G		H	

SERVICE	MANUFACTURER	NO. REQ'D.	SOURCE OF QUOTE
POWER MANIPULATOR		1	

MANIPULATOR

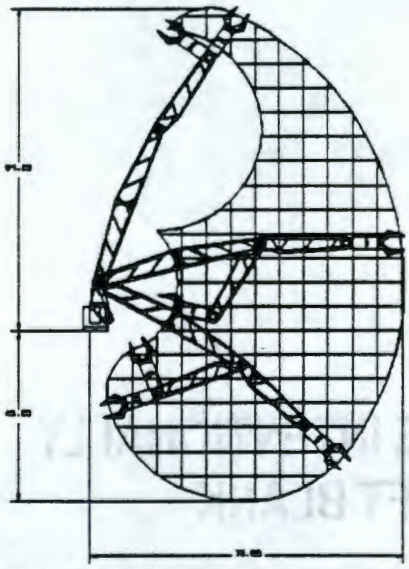

CONDITIONS OF SERVICE		DIMENSIONS	
APPLICATION: SIZE REDUCTION AND TRANSPORTATION OF WASTE WITHIN THE BOX BREAKDOWN CELL		A:	F:
UNIT LOAD DESCRIPTION: LLRMW FROM BOXES		B:	G:
UNIT LOAD SIZE: 2' X 2' X 1'	DUTY: 8 HOURS/DAY	C:	H:
UNIT LOAD WEIGHT: 250 LBS		D:	I:
LOCATION: BOX BREAKDOWN CELL		E:	J:
RATED CAPACITY: 250 LBS AT FULL EXTENSION			
CONSTRUCTION			
MATERIAL: TITANIUM			
POWER: HYDRAULIC - 3,000 PIS			
ELECTRICAL: 25 WATS AT 120/240 VAC			
WEIGHT: 147 LBS			

9413227.0133

THIS PAGE INTENTIONALLY
LEFT BLANK

SECTION 11504

94/3227.0134

THIS PAGE INTENTIONALLY
LEFT BLANK

THIS PAGE INTENTIONALLY
LEFT BLANK

WRAP MODULE 2A

SPECIFICATION SECTION
FOR
11504 LIFTING DEVICES

TABLE OF CONTENTS

PART 1 GENERAL

1.01 SECTION SCOPE
1.02 RELATED SECTIONS
1.03 REFERENCES
1.04 SYSTEM DESCRIPTION
1.05 SUBMITTALS
1.06 DELIVERY, STORAGE AND HANDLING
1.07 SITE CONDITIONS

PART 2 PRODUCTS

2.01 MANUFACTURERS
2.02 MATERIALS
2.03 EQUIPMENT
2.04 COMPONENTS
2.05 FABRICATION
2.06 SHOP QUALITY CONTROL

PART 3 EXECUTION

3.01 PREPARATION
3.02 ERECTION, INSTALLATION AND APPLICATION
3.03 FIELD QUALITY CONTROL
3.04 ADJUSTING AND CLEANING
3.05 DEMONSTRATION
3.06 PROTECTION

APPENDIX

APPENDIX A DATA SHEETS

WRAP MODULE 2A

SECTION 11504

LIFTING DEVICES

PART 1 GENERAL

1.01 SECTION SCOPE

A. This specification establishes the requirements for detailed design, fabrication, installation, start-up and acceptance testing of lifting devices for handling equipment at Hanford for WRAP Module 2A.

1.02 RELATED SECTIONS

1.03 REFERENCES

A. American Iron and Steel Institute (AISI)

B. American Society for Testing and Materials (ASTM)

D. American Institute of Steel Construction (AISC)

E. American Welding Society (AWS)
AWS D1.1 "Structural Welding Code

F. Hoist Manufacturers Institute (HMI)

G. Manufacturers Association of America (MMA)

1.04 SYSTEM DESCRIPTION

A. General: Lifting devices are required to handle equipment which cannot be lifted with lifting eyes to enable a direct attachment of the standard hoist hook. The design will be carried out in accordance dance with the appropriate codes and standards to ensure that the statutory requirements are met.

B. Construction: Fabrication will be from carbon steel and will incorporate a lifting feature to suit a standard crane hook for the rated loads. Where equipment is to be lifted by trunnions the plate hood will be profile cut from plate material of the required thickness.

9413277.0136

C. Data Sheets

Equipment Tag Nos., WBS Area Location Numbers and equipment data sheets for this description are provided in **Appendix A.**

END OF SECTION

9413227.0137

WRAP MODULE 2A

APPENDIX A

EQUIPMENT/INSTRUMENT DATA SHEETS

WBS LOCATION	EQUIPMENT TAG	SERVICE
1105	DH-05-521	Size Reduction - Drum Lifter
1105	DH-05-541	Pug Mill - Drum Lifter
1105	DH-05-602	Sampling - Drum Lifter
1106	DH-06-103	Special Waste - Shredder Bin Lifting
1106	DH-06-104	Special Waste - Shredder Bin Lifting Frame

9413227.0138

UNITED ENGINEERS & CONSTRUCTORS A Raytheon Company Western Operations	EQUIPMENT DATA SHEET ☒ CDR ☐ TITLE I ☐ TITLE II ☐ TITLE III	ITEM NUMBER DH-05-521	PAGE 1 OF 1

CUSTOMER & LOCATION	PROJECT	UE&C JOB NO. 6237.006	DATE: 05/05/92
DOE-RL/WHC HANFORD, WA	WRAP FACILITY MODULE 2A	ACCOUNT NO.	BY: SAS

REVISIONS (DATE & BY)	A		B		C		D	
	E		F		G		H	

SERVICE	MANUFACTURER	NO. REQ'D.	SOURCE OF QUOTE
DRUM LIFTER		1	

DRUM LIFTER

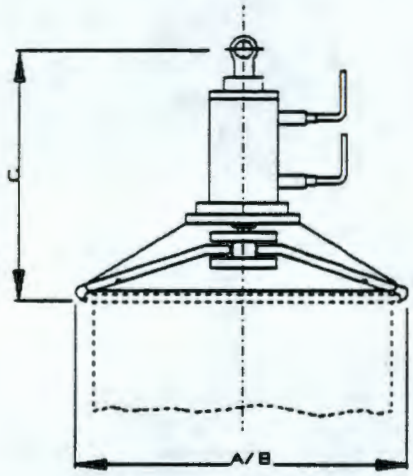

CONDITIONS OF SERVICE		DIMENSIONS	
APPLICATION: LIFT AND TRANSPORT DRUMS OF LLRMW WITHIN CONTAINMENT		A:	F:
UNIT LOAD DESCRIPTION: 55 AND 85 GAL DRUMS CONTAINING LLRMW		B:	G:
UNIT LOAD SIZE: 26" DIA X 39" HIGH	DUTY: 8 HRS/DAY	C:	H:
UNIT LOAD WEIGHT: 3,000 LBS		D:	I:
LOCATION: SHREDDING AND REPACK ENCLOSURE		E:	J:
RATED CAPACITY: 3,000 LBS			
CONSTRUCTION			
TYPE OF CONTROLS: HYDRAULIC			
TYPE OF OIL: FIRE RESISTENT			
CYLINDER SIZE:			
MATERIAL: CARBON STEEL PAINTED			

9413227.0139

UNITED ENGINEERS & CONSTRUCTORS A Raytheon Company Western Operations	EQUIPMENT DATA SHEET ☒ CDR ☐ TITLE I ☐ TITLE II ☐ TITLE III	ITEM NUMBER DH-05-541	PAGE 1 OF 1

CUSTOMER & LOCATION	PROJECT	UE&C JOB NO. 6237.006	DATE: 05/06/92
DOE-RL/WHC HANFORD, WA	WRAP FACILITY MODULE 2A	ACCOUNT NO. 1105	BY: SAS

REVISIONS (DATE & BY)	A		B		C		D	
	E		F		G		H	

SERVICE	MANUFACTURER	NO. REQ'D.	SOURCE OF QUOTE
DRUM LIFTER		1	

DRUM LIFTER

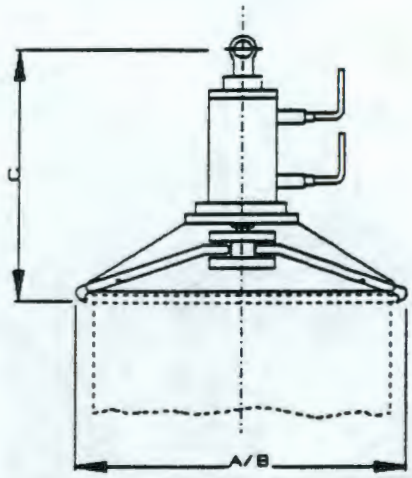

CONDITIONS OF SERVICE		DIMENSIONS	
APPLICATION: LIFT AND TRANSPORT DRUMS OF LLRMW WITHIN CONTAINMENT		A: 26.5"	F:
UNIT LOAD DESCRIPTION: 55 AND 85 GAL DRUMS CONTAINING LLRMW		B: 22.5"	G:
UNIT LOAD SIZE: 26" DIA X 39" HIGH	DUTY: 8 HRS/DAY	C: 14.75"	H:
UNIT LOAD WEIGHT: 3,000 LBS		D:	I:
LOCATION: PUG MILL ENCLOSURE		E:	J:
RATED CAPACITY: 3,000 LBS			
CONSTRUCTION			
TYPE OF CONTROLS: HYDRAULIC			
TYPE OF OIL: FIRE RESISTENT			
CYLINDER SIZE:			
MATERIAL: CARBON STEEL PAINTED			

UNITED ENGINEERS & CONSTRUCTORS A Raytheon Company Western Operations	EQUIPMENT DATA SHEET ☒ CDR ☐ TITLE I ☐ TITLE II ☐ TITLE III	ITEM NUMBER DH-05-602	PAGE 1 OF 1

CUSTOMER & LOCATION	PROJECT	UE&C JOB NO. 6237.006	DATE: 05/21/92
DOE-RL/WHC HANFORD, WA	WRAP FACILITY MODULE 2A	ACCOUNT NO.	BY: VAW

REVISIONS (DATE & BY)	A		B		C		D	
	E		F		G		H	

SERVICE	MANUFACTURER	NO. REQ'D.	SOURCE OF QUOTE
DRUM LIFTER		1	

DRUM LIFTER

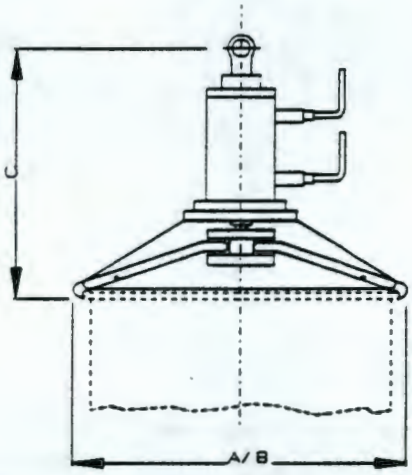

CONDITIONS OF SERVICE		DIMENSIONS	
APPLICATION: LIFT AND TRANSPORT DRUMS OF LLRMW WITHIN CONTAINMENT		A:	F:
UNIT LOAD DESCRIPTION: 55 GAL DRUMS CONTAINING LLRMW		B:	G:
UNIT LOAD SIZE: 26" DIA X 39" HIGH	DUTY: 8 HRS/DAY	C:	H:
UNIT LOAD WEIGHT: 3,000 LBS		D:	I:
LOCATION: ~~SHREDDING AND REPACK ENCLOSURE~~		E:	J:
RATED CAPACITY: 3,000 LBS			
CONSTRUCTION			
TYPE OF CONTROLS: HYDRAULIC			
TYPE OF OIL: FIRE RESISTENT			
CYLINDER SIZE:			
MATERIAL: CARBON STEEL PAINTED			

9413227.0141

UNITED ENGINEERS & CONSTRUCTORS A Raytheon Company Western Operations	EQUIPMENT DATA SHEET ☒ CDR ☐ TITLE I ☐ TITLE II ☐ TITLE III	ITEM NUMBER DH-06-103	PAGE 1 OF 1

CUSTOMER & LOCATION	PROJECT	UE&C JOB NO. 6237.006	DATE: 06/13/92
DOE-RL/WHC HANFORD, WA	WRAP FACILITY MODULE 2A	ACCOUNT NO.	BY: GBD

REVISIONS (DATE & BY)	A		B		C		D	
	E		F		G		H	

SERVICE	MANUFACTURER	NO. REQ'D.	SOURCE OF QUOTE
DRUM LIFTER		1	

DRUM LIFTER

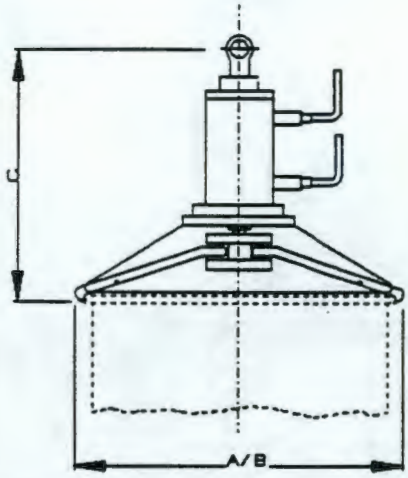

CONDITIONS OF SERVICE		DIMENSIONS	
APPLICATION: LIFT AND TRANSPORT DRUMS OF LLRMW WITHIN CONTAINMENT		A:	F:
UNIT LOAD DESCRIPTION: 55 AND 85 GAL DRUMS CONTAINING LLRMW		B:	G:
UNIT LOAD SIZE: 26" DIA X 39" HIGH	DUTY: 8 HRS/DAY	C:	H:
UNIT LOAD WEIGHT: 3,000 LBS		D:	I:
LOCATION: SHREDDING AND REPACK ENCLOSURE		E:	J:
RATED CAPACITY: 3,000 LBS			
CONSTRUCTION			
TYPE OF CONTROLS: HYDRAULIC			
TYPE OF OIL: FIRE RESISTENT			
CYLINDER SIZE:			
MATERIAL: CARBON STEEL PAINTED			

9413227.0142

UNITED ENGINEERS & CONSTRUCTORS A Raytheon Company Western Operations	EQUIPMENT DATA SHEET ☒ CDR ☐ TITLE I ☐ TITLE II ☐ TITLE III	ITEM NUMBER DH-06-104	PAGE 1 OF 1

CUSTOMER & LOCATION	PROJECT	UE&C JOB NO. 6237.006	DATE: 05/12/92
DOE-RL/WHC HANFORD, WA	WRAP FACILITY MODULE 2A	ACCOUNT NO.	BY: GBD

REVISIONS (DATE & BY)	A		B		C		D	
	E		F		G		H	

SERVICE	MANUFACTURER	NO. REQ'D.	SOURCE OF QUOTE
SHREDDER BIN - LIFTING FRAME		1	

LIFTING FRAME

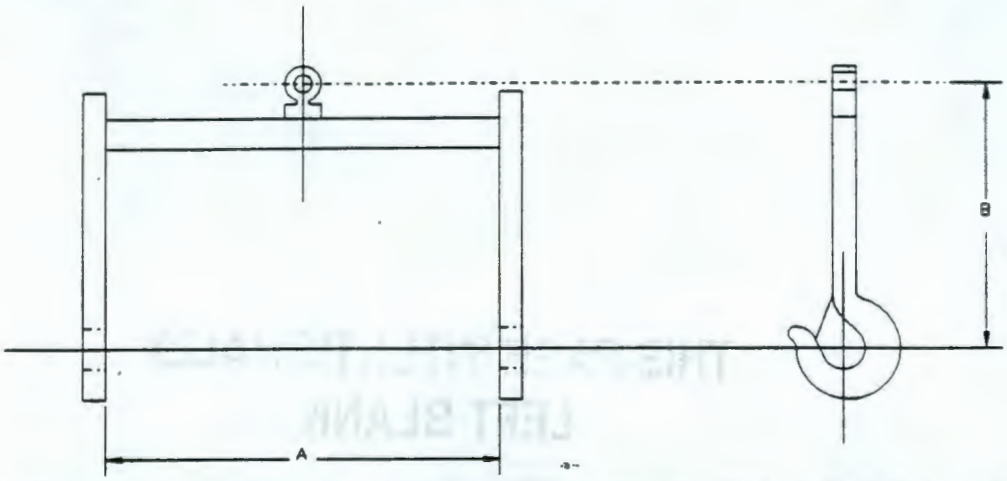

CONDITIONS OF SERVICE		DIMENSIONS	
APPLICATION: LIFTING FRAME FOR SHREDDER BIN		A: 48"	F:
UNIT LOAD DESCRIPTION: SHREDDER BIN		B: 18"	G:
UNIT LOAD SIZE: 2'-6"		C:	H:
UNIT LOAD WEIGHT: 1,500 LBS		D:	I:
		E:	J:
CONSTRUCTION			
MATERIAL: A36			
WEIGHT: 100 LBS			

9413227.0143

THIS PAGE INTENTIONALLY
LEFT BLANK

SECTION 11505

THIS PAGE INTENTIONALLY
LEFT BLANK

94/3227.0144

THIS PAGE INTENTIONALLY
LEFT BLANK

WRAP MODULE 2A

SPECIFICATION SECTION
FOR
11505 DECONTAMINATION EQUIPMENT

TABLE OF CONTENTS

PART 1 GENERAL

1.01 SECTION SCOPE
1.02 RELATED SECTIONS
1.03 REFERENCES
1.04 SYSTEM DESCRIPTION
1.05 SUBMITTALS
1.06 DELIVERY, STORAGE AND HANDLING
1.07 SITE CONDITIONS

PART 2 PRODUCTS

2.01 MANUFACTURERS
2.02 MATERIALS
2.03 EQUIPMENT
2.04 COMPONENTS
2.05 FABRICATION
2.06 SHOP QUALITY CONTROL

PART 3 EXECUTION

3.01 PREPARATION
3.02 ERECTION, INSTALLATION AND APPLICATION
3.03 FIELD QUALITY CONTROL
3.04 ADJUSTING AND CLEANING
3.05 DEMONSTRATION
3.06 PROTECTION

APPENDIX

APPENDIX A DATA SHEETS

9413227.0145

WRAP MODULE 2A

SECTION 11505

DECONTAMINATION EQUIPMENT

PART 1 GENERAL

1.01 SECTION SCOPE

A. This specification establishes the requirements for detailed design, fabrication and acceptance testing of decontamination equipment for removing radioactive contamination from equipment within process areas of WRAP 2A.

1.02 RELATED SECTIONS

1.03 REFERENCES

A. American National Standards Institute (ANSI)

B. American Society for Testing and Materials (ASTM)

C. National Electric Code (NEC)

D. AWS D1.1 "Structural Welding Code"

1.04 SYSTEM DESCRIPTION

A. General Description

1. Decontamination equipment is provided to clean contaminated equipment and surfaces at various locations in the WRAP 2A processes.

2. The equipment consists of sprays designed for the specific applications, these include fixed spray rings, hydrolasers (spray lances) with integral trigger operated valve and flexible spray hoses. Each of the spray types will be designed for the maximum pressure applicable to the decontamination process.

3. Provide a decant wand for excess water removal in grout stabilization enclosure.

B. Construction

Pipework, valves and nozzles in the decontamination system will be constructed from stainless steel. Hoses will be fitted with quick release self sealing couplings enabling hoses and hydrolasers to be disconnected. Hydrolaser extensions and nozzles will be interchangeable for longer or shorter lengths as required by the application.

C. Data Sheets

Equipment Tag Nos. WBS Area Location Numbers and equipment data sheets for this description are provided in **Appendix A.**

END OF SECTION

9H6227.0147

WRAP MODULE 2A

APPENDIX A

EQUIPMENT/INSTRUMENT DATA SHEETS

WBS LOCATION	EQUIPMENT TAG	SERVICE
1104	X-04-210A,B,C,D,E,F	Size Reduction Hydrolasers
1104	X-04-230	Special Waste Enclosure Spray
1104	X-04-231A,B,C	Special Waste Hydrolasers
1104	X-04-240	Polymer Encapsulation Enclosure Spray Ring
1104	X-04-250A,B	Grout Area Spray Rings
1104	X-04-251	Grout Area Hydrolaser
1104	X-04-252	Grout Area Drum Spray
1105	X-05-201	Excess Water Decant Wand

9413227.0148

UNITED ENGINEERS & CONSTRUCTORS A Raytheon Company Western Operations	EQUIPMENT DATA SHEET ☒ CDR ☐ TITLE I ☐ TITLE II ☐ TITLE III	ITEM NUMBER X-04-210A,B,C,D	PAGE 1 OF 1

CUSTOMER & LOCATION	PROJECT	UE&C JOB NO. 6237.006	DATE: 04/17/92
DOE-RL/WHC HANFORD, WA	WRAP FACILITY MODULE 2A	ACCOUNT NO.	BY: VAW

REVISIONS (DATE & BY)	A		B		C		D	
	E		F		G		H	

SERVICE	MANUFACTURER	NO. REQ'D.	SOURCE OF QUOTE
SIZE REDUCE & REPKG AREA HYDROLASER		4	

HYDROLASER ASSEMBLY

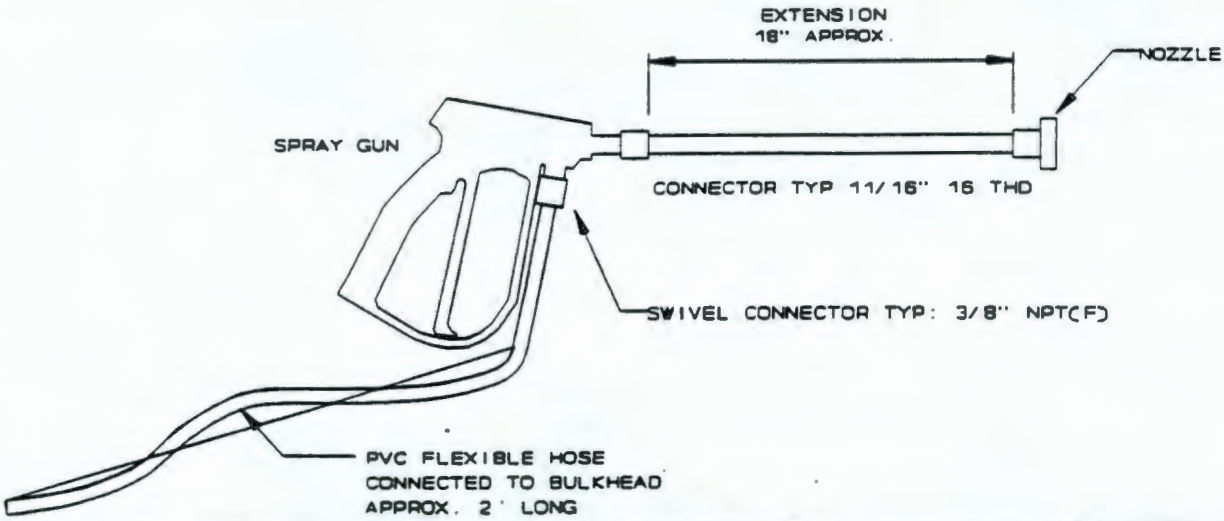

CONDITIONS OF SERVICE		DIMENSIONS	
APPLICATION: PROVIDES GLOVE-PORTED WATER SPRAY OPERATION FOR DECON IN THE SIZE REDUCE & REPACK AREA		A:	F:
NORMAL OPERATING PRESSURE: 40 TO 60 PSI		B:	G:
HIGH PRESSURE OPTION: 150 PSI	DUTY: INTERMITTENT	C:	H:
		D:	I:
		E:	J:
CONSTRUCTION			
ALTHOUGH ALL SUB ITEMS ABOVE ARE TYPICAL, CATALOG REFERENCES RELATE TO INDUSTRIAL SPRAY PRODUCTS - CATALOG 51	HOSE: PVC HOSE WITH END CONNECTORS TO SUIT SPRAY GUN AND BULKHEAD		
SPRAY GUN: MODEL 60, PAGE E7	PARKING: CLIPS TO BE PROVIDED ON ENCLOSURE TO RETAIN HYDROLASER & EXTENSION WHEN NOT IN USE		
NOZZLE TYPE: H 1/4 VVSS 1530			
EXTENSION: ALLOW FOR 4 DIFFERENT EXTENSIONS WITH NOZZLES (1 STRAIGHT PIPE AS SHOWN & 3 WITH BENT PIPES)			

9413227.0149

UNITED ENGINEERS & CONSTRUCTORS A Raytheon Company Western Operations	EQUIPMENT DATA SHEET ☒ CDR ☐ TITLE I ☐ TITLE II ☐ TITLE III	ITEM NUMBER X-04-230	PAGE 1 OF 1

CUSTOMER & LOCATION	PROJECT	UE&C JOB NO. 6237.006	DATE: 04/20/92
DOE-RL/WHC HANFORD, WA	WRAP FACILITY MODULE 2A	ACCOUNT NO.	BY: VAW

REVISIONS (DATE & BY)	A		B		C		D	
	E		F		G		H	

SERVICE	MANUFACTURER	NO. REQ'D.	SOURCE OF QUOTE
SPECIAL WASTE ENCL SPRAY RING			

SPRAY RING

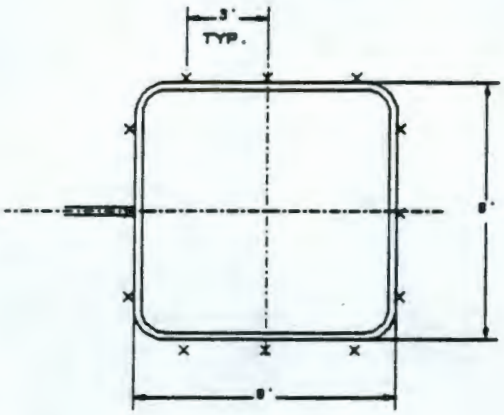

PIPE 1 1/2" SS SCH. 10
X NOZZLE POSITION

CONDITIONS OF SERVICE		DIMENSIONS	
APPLICATION: PROVIDES REMOTE DECONTAMINATION OF SPECIAL WASTE ENCL		A:	F:
NORMAL OPERATING PRESSURE: 40 - 60 PSI		B:	G:
HIGH PRESSURE: 150 PSI	DUTY: INTERMITTENT	C:	H:
		D:	I:
		E:	J:

CONSTRUCTION	
12 NOZZLES SPACED AT APPROX. 3' & NOZZLES AS SHOWN	
NOZZLE TYPE: QUICK FLOOD JET	
CODE REFERENCE: QJJ + QTK + SS + 5 OR SIMILAR OBTAINABLE FROM INDUSTRIAL SPRAY PRODUCTS CATALOG 51, PAGE A19	

UNITED ENGINEERS & CONSTRUCTORS A Raytheon Company Western Operations	EQUIPMENT DATA SHEET ☒ CDR ☐ TITLE I ☐ TITLE II ☐ TITLE III	ITEM NUMBER X-04-231	PAGE 1 OF 1

CUSTOMER & LOCATION	PROJECT	UE&C JOB NO. 6237.006	DATE: 04/17/92
DOE-RL/WHC HANFORD, WA	WRAP FACILITY MODULE 2A	ACCOUNT NO.	BY: VAW

REVISIONS (DATE & BY)	A		B		C		D	
	E		F		G		H	

SERVICE	MANUFACTURER	NO. REQ'D.	SOURCE OF QUOTE
GROUT AREA HYDROLASER		1	

HYDROLASER ASSEMBLY

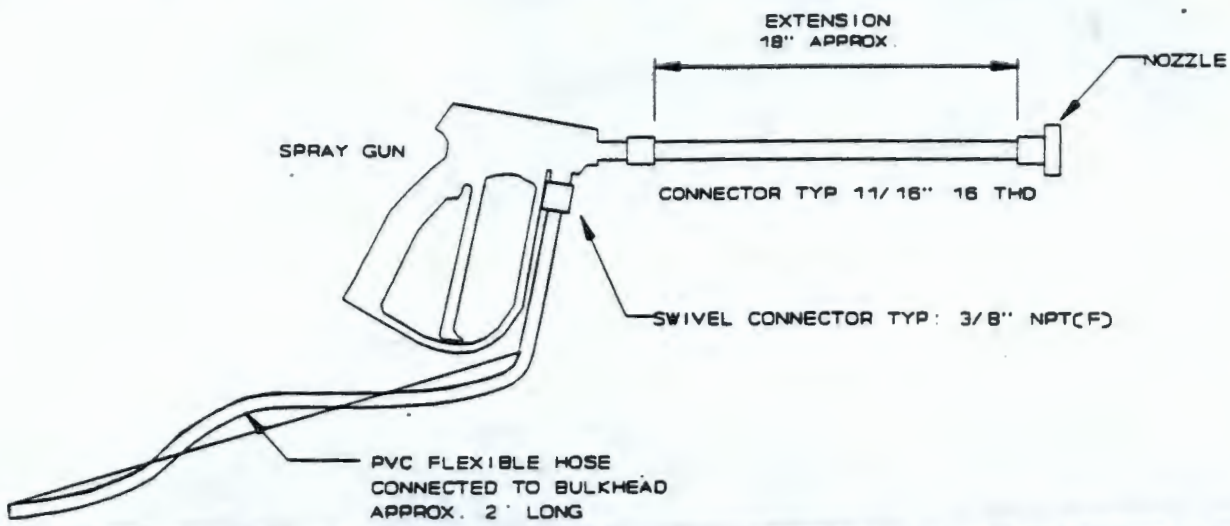

CONDITIONS OF SERVICE		DIMENSIONS	
APPLICATION: PROVIDES GLOVE-PORTED WATER SPRAY OPERATION FOR DECON IN THE SPECIAL WASTE PROCESS ENCL		A:	F:
NORMAL OPERATING PRESSURE: 40 TO 60 PSI		B:	G:
HIGH PRESSURE OPTION: 150 PSI	DUTY: INTERMITTENT	C:	H:
		D:	I:
		E:	J:

CONSTRUCTION	
ALTHOUGH ALL SUB ITEMS ABOVE ARE TYPICAL, CATALOG REFERENCES RELATE TO INDUSTRIAL SPRAY PRODUCTS - CATALOG 51	HOSE: PVC HOSE WITH END CONNECTORS TO SUIT SPRAY GUN AND BULKHEAD
SPRAY GUN: MODEL 60, PAGE E7	PARKING: CLIPS TO BE PROVIDED IN ENCLOSURE TO RETAIN HYDROLASER & EXTENSIONS WHEN NOT IN USE
NOZZLE TYPE: H 1/4 VVSS 1530	
EXTENSION: ALLOW FOR 4 DIFFERENT EXTENSIONS WITH NOZZLES (1 STRAIGHT PIPE AS SHOWN & 3 WITH BENT PIPES)	

9W3227.0151

UNITED ENGINEERS & CONSTRUCTORS A Raytheon Company Western Operations	EQUIPMENT DATA SHEET ☒ CDR ☐ TITLE I ☐ TITLE II ☐ TITLE III	ITEM NUMBER X-04-240	PAGE 1 OF 1

CUSTOMER & LOCATION	PROJECT	UE&C JOB NO. 6237.006	DATE: 04/20/92
DOE-RL/WHC HANFORD, WA	WRAP FACILITY MODULE 2A	ACCOUNT NO.	BY: VAW

REVISIONS (DATE & BY)	A		B		C		D	
	E		F		G		H	

SERVICE	MANUFACTURER	NO. REQ'D.	SOURCE OF QUOTE
POLYMER ENCAPSULATION ENCL SPRAY RING		1	

SPRAY RING

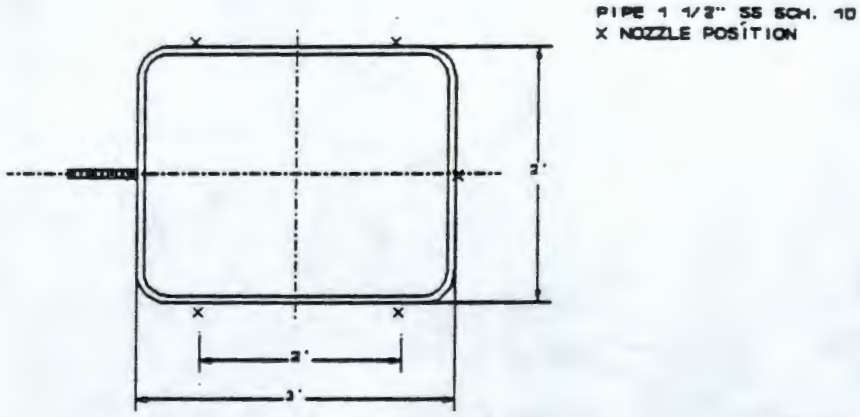

CONDITIONS OF SERVICE		DIMENSIONS	
APPLICATION: PROVIDES REMOTE DECONTAMINATION OF POLYMER ENCL		A:	F:
NORMAL OPERATING PRESSURE: 40 - 60 PSI		B:	G:
HIGH PRESSURE: 150 PSI	DUTY: INTERMITTENT	C:	H:
		D:	I:
		E:	J:
CONSTRUCTION			
6 NOZZLES SPACED AS SHOWN:			
NOZZLE TYPE: QUICK FLOOD JET			
CODE REFERENCE: QJJ + QTK + SS + 5 OR SIMILAR OBTAINABLE FROM INDUSTRIAL SPRAY PRODUCTS CATALOG 51, PAGE A19			

UNITED ENGINEERS & CONSTRUCTORS A Raytheon Company Western Operations	EQUIPMENT DATA SHEET ☒ CDR ☐ TITLE I ☐ TITLE II ☐ TITLE III	ITEM NUMBER X-04-250A,B	PAGE 1 OF 1

CUSTOMER & LOCATION	PROJECT	UE&C JOB NO. 6237.006	DATE: 04/20/92
DOE-RL/WHC HANFORD, WA	WRAP FACILITY MODULE 2A	ACCOUNT NO.	BY: VAW

REVISIONS (DATE & BY)	A		B		C		D	
	E		F		G		H	

SERVICE	MANUFACTURER	NO. REQ'D.	SOURCE OF QUOTE
GROUT AREA SPRAY RING		2	

SPRAY RING

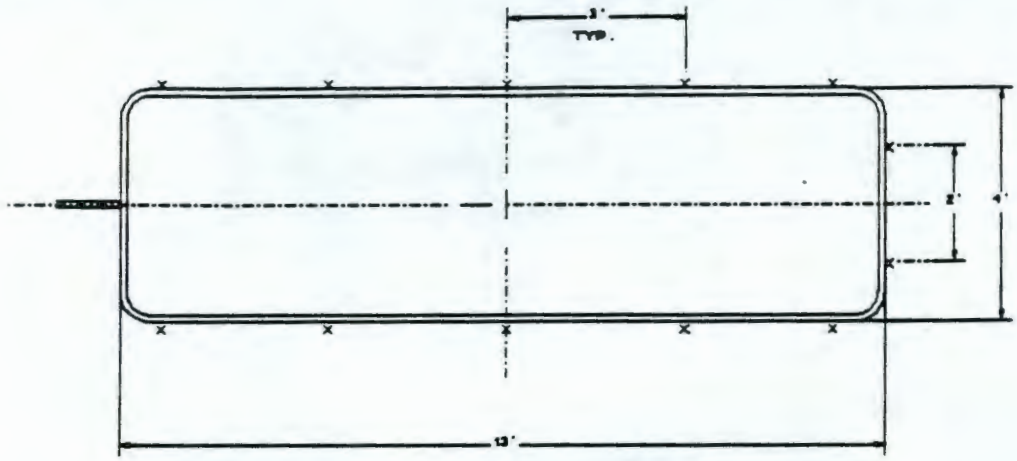

PIPE 1 1/2" SS SCH. 10
X NOZZLE POSITION

CONDITIONS OF SERVICE		DIMENSIONS	
APPLICATION: PROVIDES REMOTE DECONTAMINATION OF GROUT AREA		A:	F:
NORMAL OPERATING PRESSURE: 40 - 60 PSI		B:	G:
HIGH PRESSURE: 150 PSI	DUTY: INTERMITTENT	C:	H:
		D:	I:
		E:	J:

CONSTRUCTION	
14 NOZZLES SPACED AS SHOWN:	
NOZZLE TYPE: QUICK FLOOD JET	
CODE REFERENCE: QJJ + QTK + SS + 5 OR SIMILAR OBTAINABLE FROM INDUSTRIAL SPRAY PRODUCTS CATALOG 51, PAGE A19	

9413227.0153

UNITED ENGINEERS & CONSTRUCTORS A Raytheon Company Western Operations	EQUIPMENT DATA SHEET ☒ CDR ☐ TITLE I ☐ TITLE II ☐ TITLE III	ITEM NUMBER X-04-251	PAGE 1 OF 1

CUSTOMER & LOCATION	PROJECT	UE&C JOB NO. 6237.006	DATE: 04/17/92
DOE-RL/WHC HANFORD, WA	WRAP FACILITY MODULE 2A	ACCOUNT NO.	BY: VAW

REVISIONS (DATE & BY)	A		B		C		D	
	E		F		G		H	

SERVICE	MANUFACTURER	NO. REQ'D.	SOURCE OF QUOTE
GROUT AREA HYDROLASER		1	

HYDROLASER ASSEMBLY

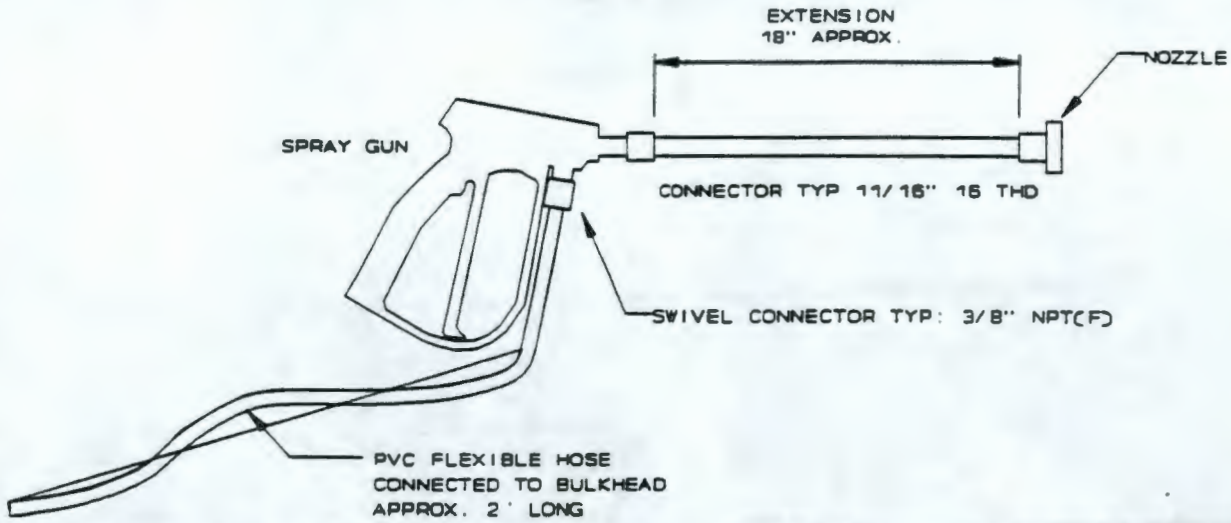

CONDITIONS OF SERVICE		DIMENSIONS	
APPLICATION: PROVIDES GLOVE-PORTED WATER SPRAY OPERATION FOR DECON IN THE GROUT AREA		A:	F:
NORMAL OPERATING PRESSURE: 40 TO 60 PSI		B:	G:
HIGH PRESSURE OPTION: 150 PSI	DUTY: INTERMITTENT	C:	H:
		D:	I:
		E:	J:
CONSTRUCTION			
ALTHOUGH ALL SUB ITEMS ABOVE ARE TYPICAL, CATALOG REFERENCES RELATE TO INDUSTRIAL SPRAY PRODUCTS - CATALOG 51	HOSE: PVC HOSE WITH END CONNECTORS TO SUIT SPRAY GUN AND BULKHEAD		
SPRAY GUN: MODEL 60, PAGE E7	PARKING: CLIPS TO BE PROVIDED IN ENCLOSURE TO RETAIN HYDROLASER & EXTENSIONS WHEN NOT IN USE		
NOZZLE TYPE: H 1/4 VVSS 1530			
EXTENSION: ALLOW FOR 4 DIFFERENT EXTENSIONS WITH NOZZLES (1 STRAIGHT PIPE AS SHOWN & 3 WITH BENT PIPES)			

UNITED ENGINEERS & CONSTRUCTORS A Raytheon Company Western Operations	EQUIPMENT DATA SHEET ☒ CDR ☐ TITLE I ☐ TITLE II ☐ TITLE III	ITEM NUMBER X-04-252	PAGE 1 OF 1

CUSTOMER & LOCATION	PROJECT	UE&C JOB NO. 6237.006	DATE: 04/23/92
DOE-RL/WHC HANFORD, WA	WRAP FACILITY MODULE 2A	ACCOUNT NO.	BY: VAW

REVISIONS (DATE & BY)	A		B		C		D	
	E		F		G		H	

SERVICE	MANUFACTURER	NO. REQ'D.	SOURCE OF QUOTE
GROUT AREA DRUM SPRAY		1	

DRUM SPRAY

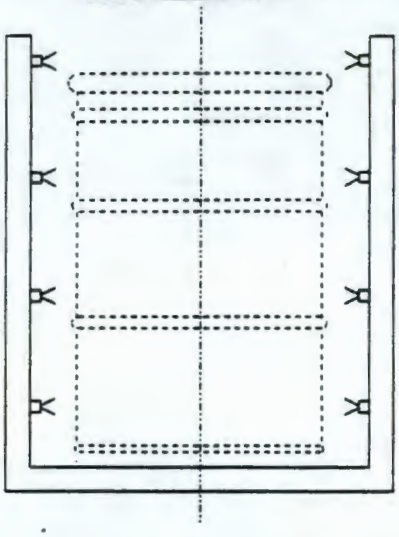

CONDITIONS OF SERVICE		DIMENSIONS	
APPLICATION: PROVIDES REMOTE DECONTAMINATION OF GROUTED PRODUCE WASTE DRUMS		A:	F:
NORMAL OPERATING PRESSURE: 1,500 PSI		B:	G:
UNIT SIZE: 22.5" DIA X 34.5" HIGH	DUTY: INTERMITTENT	C:	H:
UNIT LOAD: 1,000 LBS		D:	I:
		E:	J:

CONSTRUCTION	
12 SPRAY NOZZLES PITCHED AT 6" CENTERS ALONG STRAIGHTS STARTING AT 3" FROM ELBOWS	
FOR COSTING PURPOSES USE NOZZLE TYPE H1/4 VV SS 1530 FROM INDUSTRIAL SPRAY PRODUCTS CATALOG 51	

9413227.0155

UNITED ENGINEERS & CONSTRUCTORS
A Raytheon Company
Western Operations

CUSTOMER: DOE-RL/WHC
PROJECT: WRAP FACILITY MODULE 2A
LOCATION: HANFORD, WA

ITEM NO.: X-05-201
ACCT.:
UE&C JOB: 6237.006
PAGE: 1 OF 1
DATE: 05/20/92 BY: SMM

SERVICE: EXCESS WATER DECANT WAND NO. REQ'D.:
REVISIONS: A BY B BY C BY D BY
MANUFACTURER: MODEL: SIZE: TYPE:
SOURCE: QUOTATION NO.: DATE:

FLEXIBLE PIPE WHICH CAN BE MANUALLY POSITIONED AT SURFACE OF GROUT TO DECANT EXCESS WATER

TEMPERATURE:	**AMBIENT**
PRESSURE:	**ATMOS**
SIZE:	**1" DIAMETER**
MATERIAL:	**STAINLESS STEEL**

9310 227.0156

SECTION 11506

PW3227.0157

THIS PAGE INTENTIONALLY
LEFT BLANK

WRAP MODULE 2A

SPECIFICATION SECTION
FOR
11506 IN LINE PROCESS EQUIPMENT

TABLE OF CONTENTS

PART 1 GENERAL

1.01 SECTION SCOPE
1.02 RELATED SECTIONS
1.03 REFERENCES
1.04 SYSTEM DESCRIPTION
1.05 SUBMITTALS
1.06 DELIVERY, STORAGE AND HANDLING
1.07 SITE CONDITIONS

PART 2 PRODUCTS

2.01 MANUFACTURERS
2.02 MATERIALS
2.03 EQUIPMENT
2.04 COMPONENTS
2.05 FABRICATION
2.06 SHOP QUALITY CONTROL

PART 3 EXECUTION

3.01 PREPARATION
3.02 ERECTION, INSTALLATION AND APPLICATION
3.03 FIELD QUALITY CONTROL
3.04 ADJUSTING AND CLEANING
3.05 DEMONSTRATION
3.06 PROTECTION

APPENDIX

APPENDIX A DATA SHEETS

9113227.0158

WRAP MODULE 2A

SECTION 11506

IN LINE PROCESS EQUIPMENT

PART 1 GENERAL

1.01 SECTION SCOPE

A. This specification establishes the requirements for detailed design, fabrication, installation, start-up and acceptance testing of equipment fitted in ducts and pipework.

1.02 RELATED SECTIONS

1.03 REFERENCES

A. American National Standards Institute (ANSI)

B. American Society for Testing and Materials (ASTM)

C. National Electric Code (NEC)

D. AWS D1.1 "Structural Welding Code"

1.04 SYSTEM DESCRIPTION

A. General Description

Equipment is provided for fitting into ducts and pipework to condition the off gasses arising from various processes by heating or cooling. The heat transfer is made by tubes, finned where necessary, located in a removable section of duct and which are positioned in the airflow. The cross section of the duct will be determined by the heat transfer requirements and duct transitions will be fitted where appropriate to mate with adjacent ductwork.

B. Construction

A short section of ductwork will be fitted with a matrix of tubes to carry heater coils or cooling water as required. These will be sealed to the duct walls to prevent any direct contact with the air in the duct. Finned tubes will be used to increase the transfer surface

9413227.0159

area where necessary. The duct section will be made from the same material as the parent duct and flanged to enable a gasketed airtight joint to be made.

C. Control and Instrumentation

1. The equipment will be interlocked with control and safety interlocks.

2. The control interlocks will consist of temperature and flow sensors where appropriate and will interface with valves and switches to regulate the condition of the off-gas and protect the equipment. An indication will be provided for plant operators showing the equipment status.

3. Safety interlocks will prevent temperatures being reached which are outside the system requirements.

D. Data Sheets

Equipment Tag Nos. WBS Area Location Numbers and equipment data sheets for this description are provided in **Appendix A.**

END OF SECTION

9413227.0160

WRAP MODULE 2A

APPENDIX A

EQUIPMENT/INSTRUMENT DATA SHEETS

WBS LOCATION	EQUIPMENT TAG	SERVICE
1104	E-04-101	Vapor Condenser - Polymer Encaps
1104	H-04-101	O-G Reheater Nonactive Tanks
1104	H-04-102	O-G Reheater Active Waste Tanks
1105	E-05-301	Extender Cooler
1105	E-05-302A,B	Ves Resin Cooler
1105	E-05-401	Mixed Polymer Cooler
1106	E-06-201	Mercury Evaporator Condenser
1106	E-06-301	Scrubber Circulation Cooler
1106	H-06-301	Reheater - Scrubber Off-gas

9413227.0116

UNITED ENGINEERS & CONSTRUCTORS A Raytheon Company Western Operations	EQUIPMENT DATA SHEET ☒ CDR ☐ TITLE I ☐ TITLE II ☐ TITLE III	ITEM NUMBER E-04-101	PAGE 1 OF 1
CUSTOMER & LOCATION: DOE-RL/WHC HANFORD, WA	PROJECT: WRAP FACILITY MODULE 2A	S-R JOB/INQUIRY NO. 6237.006	DATE: 06/01/92
		ACCOUNT NO.	BY: KDV

REVISIONS (DATE & BY)	A		B		C		D	
	E		F		G		H	

SERVICE	MANUFACTURER	SOURCE OF QUOTE
POLYMER ENCAPSULATION VAPOR CONDENSER		

NO. UNITS REQUIRED	SIZE	TYPE	POSITION	CONNECTED IN PARALLEL	CONNECTED IN SERIES	EFF. SURF. PER SHELL	SHELL PER UNIT	EFF. SURF. PER UNIT
1	FACE AREA 3'-6" X 7" 3 TUBE ROWS X 3 PASSES	FINNED TUBE				FINNED 1" (30') TUBE 10 FPI 160 SQ FT	1	160 SQ FT

CONDITIONS OF SERVICE (ONE UNIT)

HEAT EXCHANGED: 7,000 BTU/HR | MTD: 8.96°F | TRANSFER RATE: SERVICE: V_x = 4.9 | CLEAN:

	SHELL SIDE				TUBE SIDE			
FLUID CIRCULATED	POLYMER ENCLOSURE OFF-GAS (AIR)				45% PROPYLENE GLYCOL/55% WATER BY WEIGHT			
TOTAL FLUID ENTERING	918 LB/HR				1,000 LB/HR			
	IN		OUT		IN		OUT	
VAPOR LB/HR / MWT								
LIQUID LB/HR					1,000		1,000	
STEAM LB/HR								
WATER LB/HR								
NONCONDENSABLES LB/HR / MWT	918	29	918	29				
ORGANIC HYDROCARBONS LB/HR	TRACE		TRACE					
LIQUID GRAVITY @ TEMP.	1.0		1.0		1.04		1.04	
VISCOSITY: LIQUID, CP	1.0		1.0		10 CP		10 CP	
HEAT; LATENT, BTU/LB; SP BTU/LB.DEG F	1,000/1.0		1,000/1.0		0.875 SP		0.875 SP	
THERM COND: BTU/(HR)(SQ FT)(DEG F PER FT) VAP/LIQ.								
TEMPERATURE °F	70		45		42		50	
OPERATING PRESSURE PSIG	0 TO -15" W.C.		0 TO -15" W.C.		35 PSIG MAX		35 PSIG MAX	
VELOCITY FPS								
NO. PASSES	ONE							
PRESSURE DROP PSI	ALLOW. 0.5" W.C.		CALC.		ALLOW.		CALC.	
FOULING RESISTANCE (MIN.)	(IN TRANSFER RATE)				(IN TRANSFER RATE)			

CONSTRUCTION

PRESSURE, PSIG	DESIGN 100	TEST	DESIGN	TEST
DESIGN TEMPERATURE, DEG F	150			

NO. TUBES 3	1" O.D. IN.	MIN. AVG. THK	BWG/IN	NOZZLES	SHELL SIDE NO.	SIZE	RATING & FACING	TUBE SIDE NO.	SIZE	RATING & FACING
LENGTH FT.	PITCH	IN. (△ □ ◇)		INLET						
SHELL DIAM. IN. ID/IN. OD	MAX. BUNDLE DIAM ALLOW	IN.		OUTLET						
TRANS. BAFFLE	SPACING IN.	CUT %		VENT						
LONG BAFFLE	IMPLINGEMENT BAFFLE ☐ YES ☐ NO			DRAIN						
MATERIALS: (MRK SR & XR - S = SPOT, F = FULL)				TEMP. CONN.						
ITEM	XR & SR	MAT'L SPECIFICATION		PRESS. CONN.						
TUBES AND FINS		304 SS								
SHELL		304 SS								
SHELL COVER (REM) (INTEG)										
CHANNEL										
CHAN. COVER (REM) (INTEG)										
FLOATING-HEAT COVER										
TUBE SHEETS										
BAFFLES & SUPPORT PLATES										
BOLTING: SHELL COVER										
CHANNEL & COVER										
FLOATING HEAD										

TEMA CLASS:	CODE REQUIREMENTS & SPECS.: ASME VIII DIV 1		
WEIGHTS PER SHELL 300	SHIPPING 400 LB	FULL OF WATER LB	BUNDLE

REMARKS: FINNED TUBE EXCHANGER, 1" OD TUBES (5/8" X 10 FPI), 30' TUBE LENGTH, 160 FT² FIN TUBE AREA, FACE AREA 3'-6" X 0'7", 3 TUBE ROWS X 3 PASSES

9113227.0162

UNITED ENGINEERS & CONSTRUCTORS A Raytheon Company Western Operations	EQUIPMENT DATA SHEET ☒ CDR ☐ TITLE I ☐ TITLE II ☐ TITLE III	ITEM NUMBER H-04-101	PAGE 1 OF 1

CUSTOMER & LOCATION	PROJECT	UE&C JOB NO. 6237.006	DATE: 06/04/92
DOE-RL/WHC HANFORD, WA	WRAP FACILITY MODULE 2A	ACCOUNT NO.	BY: KDV

REVISIONS (DATE & BY)	A		B		C		D	
	E		F		G		H	

SERVICE	MANUFACTURER	NO. REQ'D.	SOURCE OF QUOTE
NONACTIVE TANKS OFF-GAS REHEATER		1	

HEATER

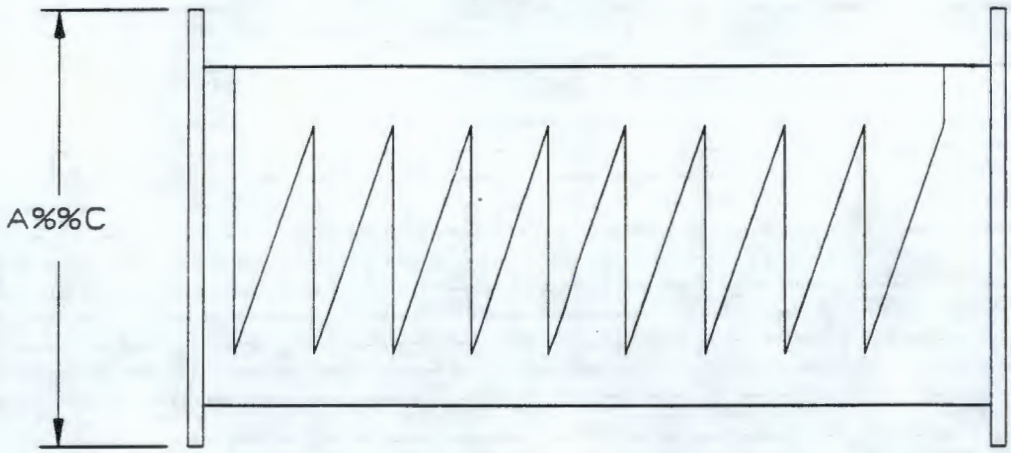

CONDITIONS OF SERVICE		DIMENSIONS	
APPLICATION: ELECTRIC IN-LINE HEATER		A:	F:
CAPACITY: 1,000 BTU/HR - 4" DIA PIPE		B:	G:
FLUID HEATED: AIR @ 100 PERCENT RH, 1A5 SCFM	DUTY: 24 HRS/DAY	C:	H:
INLET TEMP: 60°F		D:	I:
OUTLET TEMP: 100°F		E:	J:
CONSTRUCTION			
ELECTRICAL LOAD: 5KW			
AVAIL POWER VOLTS/PH/HZ: 460/3/60			
WEIGHT: 100 LBS			

UNITED ENGINEERS & CONSTRUCTORS A Raytheon Company Western Operations	EQUIPMENT DATA SHEET ☒ CDR ☐ TITLE I ☐ TITLE II ☐ TITLE III	ITEM NUMBER H-04-102	PAGE 1 OF 1

CUSTOMER & LOCATION	PROJECT	UE&C JOB NO. 6237.006	DATE: 06/04/92
DOE-RL/WHC HANFORD, WA	WRAP FACILITY MODULE 2A	ACCOUNT NO.	BY: KDV

REVISIONS (DATE & BY)	A		B		C		D	
	E		F		G		H	

SERVICE	MANUFACTURER	NO. REQ'D.	SOURCE OF QUOTE
ACTIVE WASTE TANKS OFF-GAS REHEATER		1	

HEATER

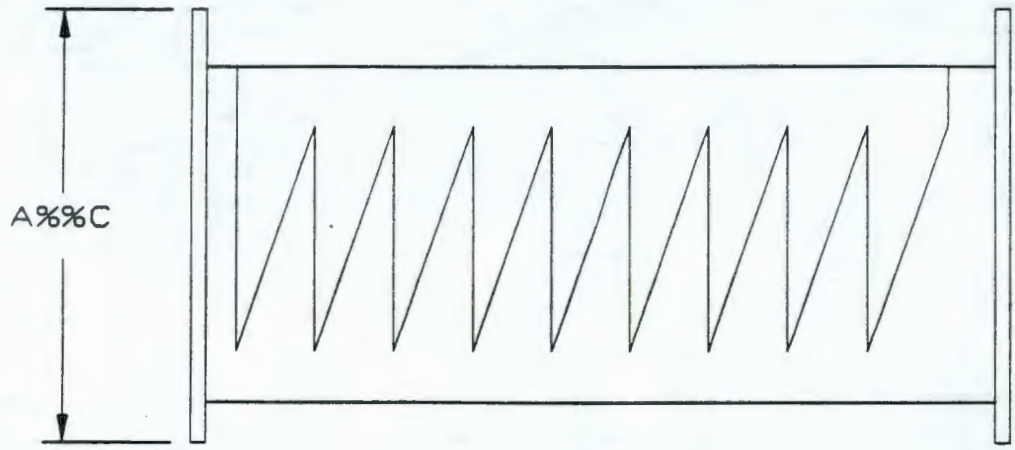

CONDITIONS OF SERVICE		DIMENSIONS	
APPLICATION: ELECTRIC IN-LINE HEATER		A:	F:
CAPACITY: 8,000 BTU/HR		B:	G:
FLUID HEATED: AIR @ 100 PERCENT RH, 170 SCFM	DUTY: 24 HRS/DAY	C:	H:
INLET TEMP: 60°F		D:	I:
OUTLET TEMP: 100°F		E:	J:
CONSTRUCTION			
ELECTRICAL LOAD: 5KW			
AVAIL POWER VOLTS/PH/HZ: 460/3/60			
WEIGHT: 100 LBS			

9413227.0164

UNITED ENGINEERS & CONSTRUCTORS A Raytheon Company Western Operations	EQUIPMENT DATA SHEET ☒ CDR ☐ TITLE I ☐ TITLE II ☐ TITLE III	ITEM NUMBER E-05-301	PAGE 1 OF 1
CUSTOMER & LOCATION: DOE-RL/WHC HANFORD, WA	PROJECT: WRAP FACILITY MODULE 2A	S-R JOB/INQUIRY NO. 6237.006	DATE: 04/20/92
		ACCOUNT NO.	BY: RLH

REVISIONS (DATE & BY)	A		B		C		D	
	E		F		G		H	

SERVICE	MANUFACTURER	SOURCE OF QUOTE
EXTENDER COOLER		

NO. UNITS REQUIRED	SIZE	TYPE	POSITION	CONNECTED IN: PARALLEL	CONNECTED IN: SERIES	EFF. SURF. PER SHELL	SHELL PER UNIT	EFF. SURF. PER UNIT
1		*				SQ FT		2.5 SQ FT

CONDITIONS OF SERVICE (ONE UNIT)

HEAT EXCHANGED: 700 BTU/HR	MTD: 9 °F	TRANSFER RATE: SERVICE: 30	CLEAN:

	SHELL SIDE		TUBE SIDE	
FLUID CIRCULATED	CHILLED WATER		STYRENE	
TOTAL FLUID ENTERING	47 LB/HR		1,350 LB/HR	
	IN	OUT	IN	OUT
VAPOR LB/HR MWT				
LIQUID LB/HR			1,350	1,350
STEAM LB/HR				
WATER LB/HR	47	47		
NONCONDENSABLES LB/HR MWT				
LIQUID GRAVITY @ TEMP.	1.0	1.0	0.90	0.90
VISCOSITY: LIQUID, CP	1.0	1.0	0.70	0.70
HEAT; LATENT, BTU/LB; SP BTU/LB.DEG F	1,000/1.0	1,000/1.0	/0.42	/0.42
THERM COND: BTU/(HR)(SQ FT)(DEG F PER FT) VAP/LIQ.				
TEMPERATURE °F	42	57	61	60
OPERATING PRESSURE PSIG			20	
VELOCITY FPS				
NO. PASSES				
PRESSURE DROP PSI	ALLOW.	CALC.	ALLOW.	CALC.
FOULING RESISTANCE (MIN.)				

CONSTRUCTION

PRESSURE, PSIG	DESIGN 100	TEST	DESIGN	TEST
DESIGN TEMPERATURE, DEG F	150			

NO. TUBES	O.D. IN.	MIN. AVG. THK BWG/IN	NOZZLES	SHELL SIDE NO.	SHELL SIDE SIZE	SHELL SIDE RATING & FACING	TUBE SIDE NO.	TUBE SIDE SIZE	TUBE SIDE RATING & FACING
LENGTH FT.	PITCH IN. (△ □ ◇)		INLET						
SHELL DIAM. IN. ID/IN. OD	MAX. BUNDLE DIAM ALLOW IN.		OUTLET						
TRANS. BAFFLE	SPACING IN.	CUT %	VENT						
LONG BAFFLE	IMPLINGEMENT BAFFLE ☐ YES ☐ NO		DRAIN						
MATERIALS: (MRK SR & XR - S=SPOT, F=FULL)			TEMP. CONN.						
ITEM	XR & SR	MAT'L SPECIFICATION	PRESS. CONN.						
TUBES		SS							
SHELL		CS							
SHELL COVER (REM) (INTEG)									
CHANNEL									
CHAN. COVER (REM) (INTEG)									
FLOATING-HEAT COVER									
TUBE SHEETS									
BAFFLES & SUPPORT PLATES									
BOLTING: SHELL COVER									
CHANNEL & COVER									
FLOATING HEAT									

TEMA CLASS:	CODE REQUIREMENTS & SPECS.: ASME VIII DIV 1		
WEIGHTS PER SHELL	SHIPPING 800 LB	FULL OF WATER LB	BUNDLE

REMARKS: * - DOUBLE PIPE

UNITED ENGINEERS & CONSTRUCTORS A Raytheon Company Western Operations	EQUIPMENT DATA SHEET ☒ CDR ☐ TITLE I ☐ TITLE II ☐ TITLE III	ITEM NUMBER E-05-302A,B	PAGE 1 OF 1

CUSTOMER & LOCATION	PROJECT	S-R JOB/INQUIRY NO.	DATE: 04/20/92
DOE-RL/WHC HANFORD, WA	WRAP FACILITY MODULE 2A	6237.006	
		ACCOUNT NO.	BY: RLH

REVISIONS (DATE & BY)	A		B		C		D	
	E		F		G		H	

SERVICE	MANUFACTURER	SOURCE OF QUOTE
VES RESIN COOLER		

NO. UNITS REQUIRED	SIZE	TYPE	POSITION	CONNECTED IN PARALLEL	CONNECTED IN SERIES	EFF. SURF. PER SHELL	SHELL PER UNIT	EFF. SURF. PER UNIT
2		*				SQ FT		16.2 SQ FT

CONDITIONS OF SERVICE (ONE UNIT)

HEAT EXCHANGED: 2,800 BTU/HR	MTD: 9 °F	TRANSFER RATE: SERVICE: 20	CLEAN:

	SHELL SIDE		TUBE SIDE	
FLUID CIRCULATED	CHILLED WATER		VES RESIN	
TOTAL FLUID ENTERING	188 LB/HR		18,600 LB/HR	
	IN	OUT	IN	OUT
VAPOR LB/HR MWT				
LIQUID LB/HR			18,600	18,600
STEAM LB/HR				
WATER LB/HR	188	188		
NONCONDENSABLES LB/HR MWT				
LIQUID GRAVITY @ TEMP.	1.0	1.0	1.03	1.03
VISCOSITY: LIQUID, CP	1.0	1.0	130	130
HEAT; LATENT, BTU/LB; SP BTU/LB.DEG F	1,000/1.0	1,000/1.0	/0.42	/0.42
THERM COND: BTU/(HR)(SQ FT)(DEG F PER FT) VAP/LIQ.				
TEMPERATURE °F	42	57	61	60
OPERATING PRESSURE PSIG			50	
VELOCITY FPS				
NO. PASSES				
PRESSURE DROP PSI	ALLOW.	CALC.	ALLOW.	CALC.
FOULING RESISTANCE (MIN.)				

CONSTRUCTION

PRESSURE, PSIG	DESIGN 100	TEST	DESIGN	TEST
DESIGN TEMPERATURE, DEG F	150			

NO. TUBES	O.D. IN.	MIN. AVG. THK BWG/IN	NOZZLES	SHELL SIDE NO.	SHELL SIDE SIZE	SHELL SIDE RATING & FACING	TUBE SIDE NO.	TUBE SIDE SIZE	TUBE SIDE RATING & FACING
LENGTH	FT.	PITCH IN. (△ □ ◇)	INLET						
SHELL DIAM.	IN.IDIN. OD	MAX. BUNDLE DIAM ALLOW IN.	OUTLET						
TRANS. BAFFLE	SPACING IN.	CUT %	VENT						
LONG BAFFLE	IMPLINGEMENT BAFFLE ☐ YES ☐ NO		DRAIN						
MATERIALS: (MRK SR & XR - S=SPOT, F=FULL)			TEMP. CONN.						
ITEM	XR & SR	MAT'L SPECIFICATION	PRESS. CONN.						
TUBES		SS							
SHELL		CS							
SHELL COVER (REM) (INTEG)									
CHANNEL									
CHAN. COVER (REM) (INTEG)									
FLOATING-HEAT COVER									
TUBE SHEETS									
BAFFLES & SUPPORT PLATES									
BOLTING: SHELL COVER									
CHANNEL & COVER									
FLOATING HEAD									

TEMA CLASS:	CODE REQUIREMENTS & SPECS.: ASME VIII DIV 1		
WEIGHTS PER SHELL	SHIPPING 1,800 LB	FULL OF WATER LB	BUNDLE

REMARKS: * - DOUBLE PIPE OR SHELL AND TUBE

9413227.0166

UNITED ENGINEERS & CONSTRUCTORS A Raytheon Company Western Operations	EQUIPMENT DATA SHEET ☒ CDR ☐ TITLE I ☐ TITLE II ☐ TITLE III	ITEM NUMBER E-05-401	PAGE 1 OF 1
CUSTOMER & LOCATION DOE-RL/WHC HANFORD, WA	PROJECT WRAP FACILITY MODULE 2A	S-R JOB/INQUIRY NO. 6237.006	DATE: 04/20/92
		ACCOUNT NO.	BY: RLH

REVISIONS (DATE & BY)	A		B		C		D	
	E		F		G		H	

SERVICE MIXED POLYMER COOLER	MANUFACTURER	SOURCE OF QUOTE

NO. UNITS REQUIRED	SIZE	TYPE	POSITION	CONNECTED IN PARALLEL	CONNECTED IN SERIES	EFF. SURF. PER SHELL	SHELL PER UNIT	EFF. SURF. PER UNIT
1		*				SQ FT		0.5 SQ FT

CONDITIONS OF SERVICE (ONE UNIT)

HEAT EXCHANGED: 1,200 BTU/HR	MTD: °F	TRANSFER RATE: SERVICE:	CLEAN:

	SHELL SIDE IN	SHELL SIDE OUT	TUBE SIDE IN	TUBE SIDE OUT
FLUID CIRCULATED	CHILLED WATER		MIXED POLYMER	
TOTAL FLUID ENTERING	82 LB/HR		3,100 LB/HR	
VAPOR LB/HR MWT				
LIQUID LB/HR			3,100	3,100
STEAM LB/HR				
WATER LB/HR	82	82		
NONCONDENSABLES LB/HR MWT				
LIQUID GRAVITY @ TEMP.	1.0	1.0	1.03	1.03
VISCOSITY: LIQUID, CP	1.0	1.0	130	130
HEAT; LATENT, BTU/LB; SP BTU/LB.DEG F	1,000/1.0	1,000/1.0	/0.42	/0.42
THERM COND: BTU/(HR)(SQ FT)(DEG F PER FT) VAP/LIQ.				
TEMPERATURE °F	42	57	61	60
OPERATING PRESSURE PSIG			100	
VELOCITY FPS				
NO. PASSES				
PRESSURE DROP PSI	ALLOW.	CALC.	ALLOW.	CALC.
FOULING RESISTANCE (MIN.)				

CONSTRUCTION

PRESSURE, PSIG	DESIGN 100	TEST	DESIGN	TEST
DESIGN TEMPERATURE, DEG F	150			

NO. TUBES	O.D. IN.	MIN. AVG. THK BWG/IN	NOZZLES	SHELL SIDE NO.	SHELL SIDE SIZE	SHELL SIDE RATING & FACING	TUBE SIDE NO.	TUBE SIDE SIZE	TUBE SIDE RATING & FACING
LENGTH FT.	PITCH IN. (△ ☐ ◇)		INLET						
SHELL DIAM. IN. ID/IN. OD		MAX. BUNDLE DIAM ALLOW IN.	OUTLET						
TRANS. BAFFLE	SPACING IN.	CUT %	VENT						
LONG BAFFLE	IMPLINGEMENT BAFFLE ☐ YES ☐ NO		DRAIN						
MATERIALS: (MRK SR & XR - S=SPOT, F=FULL)			TEMP. CONN.						
ITEM	XR & SR	MAT'L SPECIFICATION	PRESS. CONN.						
TUBES		SS							
SHELL		CS							
SHELL COVER (REM) (INTEG)									
CHANNEL									
CHAN. COVER (REM) (INTEG)									
FLOATING-HEAT COVER									
TUBE SHEETS									
BAFFLES & SUPPORT PLATES									
BOLTING: SHELL COVER									
CHANNEL & COVER									
FLOATING HEAD									

TEMA CLASS:	CODE REQUIREMENTS & SPECS.: ASME VIII DIV 1		
WEIGHTS PER SHELL	SHIPPING 400 LB	FULL OF WATER LB	BUNDLE

REMARKS: * - DOUBLE PIPE OR SHELL AND TUBE

UNITED ENGINEERS & CONSTRUCTORS A Raytheon Company Western Operations	EQUIPMENT DATA SHEET ☒ CDR ☐ TITLE I ☐ TITLE II ☐ TITLE III	ITEM NUMBER E-06-201	PAGE 1 OF 1
CUSTOMER & LOCATION: DOE-RL/WHC HANFORD, WA	PROJECT: WRAP FACILITY MODULE 2A	S-R JOB/INQUIRY NO. 6237.006	DATE: 04/08/92
		ACCOUNT NO.	BY: RLH

REVISIONS (DATE & BY)	A	04/20/92 RLH	B		C		D	
	E		F		G		H	

SERVICE EVAPORATOR CONDENSER	MANUFACTURER	SOURCE OF QUOTE

NO. UNITS REQUIRED	SIZE	TYPE DBL PIPE	POSITION	CONNECTED IN PARALLEL	CONNECTED IN SERIES	EFF. SURF. PER SHELL SQ FT	SHELL PER UNIT	EFF. SURF. PER UNIT SQ FT
1								

CONDITIONS OF SERVICE (ONE UNIT)

HEAT EXCHANGED	1,000 BTU/HR	MTD 1.33 °F	TRANSFER RATE: SERVICE 70	CLEAN

	SHELL SIDE				TUBE SIDE			
FLUID CIRCULATED	CHILLED WATER				MERCURY VAPOR			
TOTAL FLUID ENTERING	67 LB/HR				6 LB/HR			
	IN		OUT		IN		OUT	
VAPOR LB/HR / MWT					6	132	2	20
LIQUID LB/HR							3	
STEAM LB/HR								
WATER LB/HR	67		67					
NONCONDENSABLES LB/HR / MWT								
LIQUID GRAVITY @ TEMP.	1.0		1.0				13.61	
VISCOSITY: LIQUID, CP			1.0					
HEAT; LATENT, BTU/LB / SP BTU/LB.DEG F	1000/1.0		1000/1.0		125/.033		125/.033	
THERM COND: BTU/(HR)(SQ FT)(DEG F PER FT) VAP/LIQ.								
TEMPERATURE °F	42		57		500		60	
OPERATING PRESSURE PSIG					14.7		14.7	
VELOCITY FPS								
NO. PASSES								
PRESSURE DROP PSI	ALLOW.		CALC.		ALLOW.		CALC.	
FOULING RESISTANCE (MIN.)								

CONSTRUCTION

PRESSURE, PSIG: 14.7	DESIGN: 22.5	TEST: 22.5	DESIGN	TEST
DESIGN TEMPERATURE, DEG F	550°F			

NO. TUBES	O.D. IN.	MIN. AVG. THK BWG/IN	NOZZLES	SHELL SIDE NO.	SHELL SIDE SIZE	SHELL SIDE RATING & FACING	TUBE SIDE NO.	TUBE SIDE SIZE	TUBE SIDE RATING & FACING
LENGTH FT.	PITCH IN. (Δ ☐ ◇)		INLET						
SHELL DIAM. IN. ID IN. OD	MAX. BUNDLE DIAM ALLOW IN.		OUTLET						
TRANS. BAFFLE	SPACING IN.	CUT %	VENT						
LONG BAFFLE	IMPLINGEMENT BAFFLE ☐ YES ☐ NO		DRAIN						
MATERIALS: (MRK SR & XR - S=SPOT, F=FULL)			TEMP. CONN.						
ITEM	XR & SR	MAT'L SPECIFICATION	PRESS. CONN.						
TUBES									
SHELL									
SHELL COVER (REM) (INTEG)									
CHANNEL									
CHAN. COVER (REM) (INTEG)									
FLOATING-HEAT COVER									
TUBE SHEETS									
BAFFLES & SUPPORT PLATES									
BOLTING: SHELL COVER									
CHANNEL & COVER									
FLOATING HEAD									

TEMA CLASS:	CODE REQUIREMENTS & SPECS.:		
WEIGHTS PER SHELL	SHIPPING LB	FULL OF WATER LB	BUNDLE

REMARKS:

9H3227.0168

UNITED ENGINEERS & CONSTRUCTORS A Raytheon Company Western Operations	EQUIPMENT DATA SHEET ☒ CDR ☐ TITLE I ☐ TITLE II ☐ TITLE III	ITEM NUMBER E-06-301	PAGE 1 OF 1
CUSTOMER & LOCATION: DOE-RL/WHC HANFORD, WA	PROJECT: WRAP FACILITY MODULE 2A	S-R JOB/INQUIRY NO. 6237.006	DATE: 04/08/92
		ACCOUNT NO.	BY: RLH

REVISIONS (DATE & BY)	A	04/20/92 RLH	B		C		D	
	E		F		G		H	

SERVICE: SCRUBBER CIRCULATION COOLER	MANUFACTURER	SOURCE OF QUOTE

NO. UNITS REQUIRED	SIZE	TYPE	POSITION	CONNECTED IN: PARALLEL	CONNECTED IN: SERIES	EFF. SURF. PER SHELL	SHELL PER UNIT	EFF. SURF. PER UNIT
		*				SQ FT		11.3 SQ FT

CONDITIONS OF SERVICE (ONE UNIT)

HEAT EXCHANGED	7,000 BTU/HR	MTD 6 °F	TRANSFER RATE: SERVICE 100	CLEAN

	SHELL SIDE		TUBE SIDE	
FLUID CIRCULATED	CHILLED WATER		SCRUBBER FLUID	
TOTAL FLUID ENTERING	470 LB/HR		1,000 LB/HR	
	IN	OUT	IN	OUT
VAPOR LB/HR MWT				
LIQUID LB/HR			1,000	1,000
STEAM LB/HR				
WATER LB/HR	470	470		
NONCONDENSABLES LB/HR MWT				
LIQUID GRAVITY @ TEMP.	1.0	1.0	1.0	1.0
VISCOSITY: LIQUID, CP	1.0	1.0	1.0	1.0
HEAT; LATENT, BTU/LB; SP BTU/LB.DEG F	1,000/1.0	1,000/1.0	1,000/1.0	1,000/1.0
THERM COND: BTU/(HR)(SQ FT)(DEG F PER FT) VAP/LIQ.				
TEMPERATURE °F	42	57	60	53
OPERATING PRESSURE PSIG			20	
VELOCITY FPS				
NO. PASSES				
PRESSURE DROP PSI	ALLOW.	CALC.	ALLOW.	CALC.
FOULING RESISTANCE (MIN.)				

CONSTRUCTION

PRESSURE, PSIG	DESIGN	TEST	DESIGN	TEST
DESIGN TEMPERATURE, DEG F				

NO. TUBES	O.D. IN.	MIN. AVG. THK BWG/IN	NOZZLES	SHELL SIDE NO.	SHELL SIDE SIZE	SHELL SIDE RATING & FACING	TUBE SIDE NO.	TUBE SIDE SIZE	TUBE SIDE RATING & FACING
LENGTH	FT.	PITCH IN. (Δ □ ◇)	INLET						
SHELL DIAM.	IN. ID/IN. OD	MAX. BUNDLE DIAM ALLOW IN.	OUTLET						
TRANS. BAFFLE	SPACING IN.	CUT %	VENT						
LONG BAFFLE	IMPLINGEMENT BAFFLE ☐ YES ☐ NO		DRAIN						
MATERIALS: (MRK SR & XR - S = SPOT, F = FULL)			TEMP. CONN.						
			PRESS. CONN.						

ITEM	XR & SR	MAT'L SPECIFICATION
TUBES		316 STAINLESS STEEL
SHELL		316 STAINLESS STEEL
SHELL COVER (REM) (INTEG)		
CHANNEL		
CHAN. COVER (REM) (INTEG)		
FLOATING-HEAT COVER		
TUBE SHEETS		
BAFFLES & SUPPORT PLATES		
BOLTING: SHELL COVER		
CHANNEL & COVER		
FLOATING HEAT		

TEMA CLASS:	CODE REQUIREMENTS & SPECS.:		
WEIGHTS PER SHELL	SHIPPING LB	FULL OF WATER LB	BUNDLE

REMARKS: *DOUBLE PIPE OR SHELL & TUBE

G:\BECKY\WP51\WRAP\E06301.RV0

UNITED ENGINEERS & CONSTRUCTORS A Raytheon Company Western Operations	EQUIPMENT DATA SHEET ☒ CDR ☐ TITLE I ☐ TITLE II ☐ TITLE III	ITEM NUMBER H-06-301	PAGE 1 OF 1

CUSTOMER & LOCATION	PROJECT	UE&C JOB NO. 6237.006	DATE: 04/28/92
DOE-RL/WHC HANFORD, WA	WRAP FACILITY MODULE 2A	ACCOUNT NO.	BY: KDV

REVISIONS (DATE & BY)	A		B		C		D	
	E		F		G		H	

SERVICE	MANUFACTURER	NO. REQ'D.	SOURCE OF QUOTE
SCRUBBER OFF-GAS REHEATER		1	

HEATER

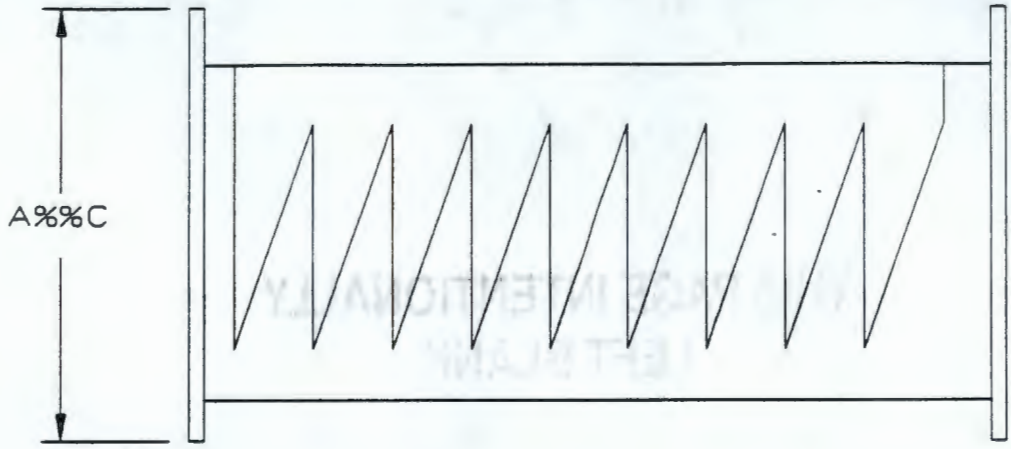

CONDITIONS OF SERVICE		DIMENSIONS	
APPLICATION: SCRUBBER OFF-GAS CONDITIONING FOR SUPPLY TO HUMIDIFIER		A:	F:
PROCESS FLOW: SATURATED AIR WITH NITROGEN		B:	G:
FLOW RATE: 17 CFM - 72 LBS/HR	DUTY: 24 HRS/DAY	C:	H:
INLET TEMP: 50°F		D:	I:
OUTLET TEMP: 80°F		E:	J:
DESIGN DUTY: 1,000 BTU/HR			
HEATER TYPE: IN-LINE ELECTRIC			
CONSTRUCTION			
HEATER MATERIAL: STAINLESS STEEL			
AVAIL POWER (VOLTS/PH/HZ): 460/3/60			
WEIGHT: 30 LBS MAX			
DUCT SIZE: 4" DIA			

9413227.0170

THIS PAGE INTENTIONALLY
LEFT BLANK

SECTION 11507

94A3227.0171

THIS PAGE INTENTIONALLY
LEFT BLANK

WRAP MODULE 2A

SPECIFICATION SECTION
FOR
11507 JAR MILL

TABLE OF CONTENTS

PART 1 GENERAL

1.01 SECTION SCOPE
1.02 RELATED SECTIONS
1.03 REFERENCES
1.04 SYSTEM DESCRIPTION
1.05 SUBMITTALS
1.06 DELIVERY, STORAGE AND HANDLING
1.07 SITE CONDITIONS

PART 2 PRODUCTS

2.01 MANUFACTURERS
2.02 MATERIALS
2.03 EQUIPMENT
2.04 COMPONENTS
2.05 FABRICATION
2.06 SHOP QUALITY CONTROL

PART 3 EXECUTION

3.01 PREPARATION
3.02 ERECTION, INSTALLATION AND APPLICATION
3.03 FIELD QUALITY CONTROL
3.04 ADJUSTING AND CLEANING
3.05 DEMONSTRATION
3.06 PROTECTION

APPENDIX

APPENDIX A DATA SHEETS

WRAP MODULE 2A

SECTION 11507

JAR MILL

PART 1 GENERAL

1.01 SECTION SCOPE

A. This specification establishes the requirements for detailed design, fabrication, installation, start-up, and acceptance testing of a jar mill for amalgamating mercury bottles.

1.02 RELATED SECTIONS

1.03 REFERENCES

A. American National Standards Institute (ANSI)

B. American Society for Testing and Materials (ASTM)

C. National Electric Code (NEC)

D. AWS D1.1 "Structural Welding Code"

1.04 SYSTEM DESCRIPTION

A. General Description

A jar mill is provided to amalgamate liquid mercury with chemicals to form a solid waste suitable for encapsulation. It will process up to four containers simultaneously.

B. Construction

The jar mill will be constructed from carbon steel and will be driven electrically using a variable speed control.

C. Data Sheets

Equipment Tag Nos. WBS Area Location Numbers and equipment data sheets for this description are provided in **Appendix A.**

9413277.0173

WRAP MODULE 2A

END OF SECTION
APPENDIX A

EQUIPMENT/INSTRUMENT DATA SHEETS

WBS LOCATION	EQUIPMENT TAG	SERVICE
1106	X-06-201A,B	Mercury Amalgamation

9413227.0174

APRIL 1992

UE&C PROJECT 6237.006

FILE NO. 11507 - 1

UNITED ENGINEERS & CONSTRUCTORS A Raytheon Company Western Operations	EQUIPMENT DATA SHEET ☒ CDR ☐ TITLE I ☐ TITLE II ☐ TITLE III	ITEM NUMBER X-06-201A,B	PAGE 1 OF 1
CUSTOMER & LOCATION DOE-RL/WHC HANFORD, WA	PROJECT WRAP FACILITY MODULE 2A	UE&C JOB NO. 6237.006 / ACCOUNT NO.	DATE: 06/02/92 / BY: GBD

REVISIONS (DATE & BY)	A		B		C		D	
	E		F		G		H	

SERVICE	MANUFACTURER	NO. REQ'D.	SOURCE OF QUOTE
JAR MILL		1	

JAR MILL

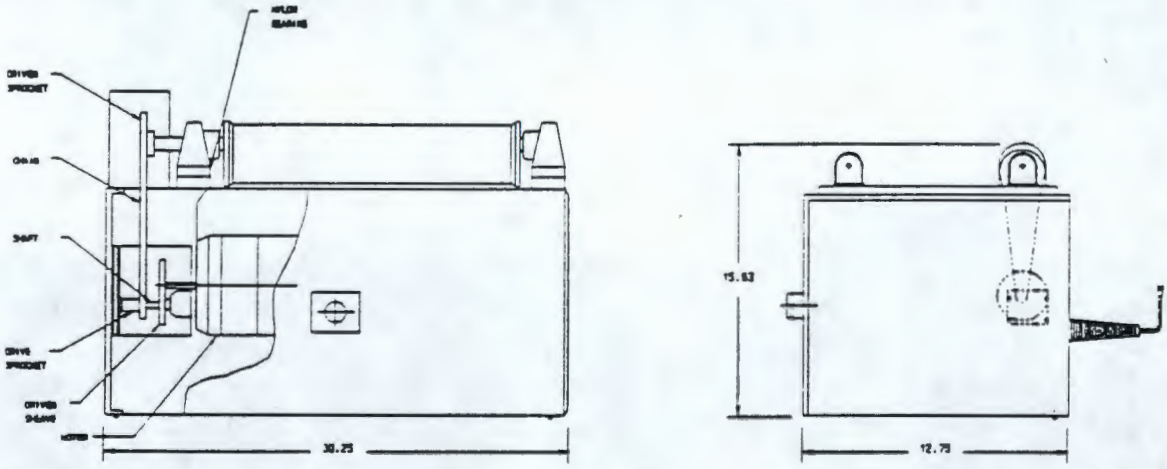

CONDITIONS OF SERVICE		DIMENSIO
APPLICATION: MIX THE CONTENTS OF ROUND MERCURY CONTAINERS		A:
UNIT LOAD DESCRIPTION: ROUND VESSELS ROTATE BETWEEN ROLLER SHAFTS		B:
UNIT JAR SIZE: 2" THRU 9" DIA	DUTY: 8 HRS/DAY	C:
LOCATION: INSIDE SPECIAL WASTE AMALGAMATION ENCL	SPEED: 20 THRU 300 RPMS	
	NEC AREA CLASS: UNCLASSIFIED	

CONSTRUCTION	
POWER REQUIRED (VOLTS/PH/HZ): 115/1/60	SHIPPING WEIGHT: 205 LBS
MOTOR POWER: .5 HP	NEMA RATING: 1
TYPE OF CONTROL: ON/OFF & SPEED CONTROL KNOB	MAINTENANCE REQ.: EVERY 360 OPERATING HRS LUBRICATE & TIGHTEN CHAIN
DRIVE TYPE: CHAIN DRIVE	BEARINGS: SEALED BALL BEARINGS
RATED CAPACITY: 4 MILL JARS	LUBRICATION: GREASE
ROLLER MATERIAL: NEOPRENE RUBBER	CHAIN: STEEL LINKS
SHIELDING: BONDED .25" LEAD W/BOND 16 GA OUTER SKIN	LUBRICATION: 40 WEIGHT OIL

9413227.0175

WRAP MODULE 2A

DIVISION 12 - FURNISHINGS

TABLE OF CONTENTS

SECTION	DESCRIPTION
12000	FURNISHINGS

9410.2273.116

THIS PAGE INTENTIONALLY
LEFT BLANK

SECTION 12000

94 3227.0177

THIS PAGE INTENTIONALLY
LEFT BLANK

WRAP MODULE 2A

SPECIFICATION SECTION
FOR
12000 FURNISHINGS

TABLE OF CONTENTS

PART 1 GENERAL

1.01 SECTION SCOPE
1.02 RELATED SECTIONS
1.03 REFERENCES
1.04 SYSTEM DESCRIPTION
1.05 SUBMITTALS
1.06 DELIVERY, STORAGE AND HANDLING
1.07 SITE CONDITIONS

PART 2 PRODUCTS

2.01 MANUFACTURERS
2.02 MATERIALS
2.03 EQUIPMENT
2.04 COMPONENTS
2.05 FABRICATION
2.06 SHOP QUALITY CONTROL

PART 3 EXECUTION

3.01 PREPARATION
3.02 ERECTION, INSTALLATION AND APPLICATION
3.03 FIELD QUALITY CONTROL
3.04 ADJUSTING AND CLEANING
3.05 DEMONSTRATION
3.06 PROTECTION

9W4227.0178

WRAP MODULE 2A

SECTION 12000

FURNISHINGS

PART 1 GENERAL

1.01 SECTION SCOPE

A. This specification establishes the requirements for detailed design and installation of furnishings for WRAP Module 2A.

1.02 RELATED SECTIONS

1.03 REFERENCES

A. National Fire Protection Association
NFPA 101, Ch. 31 Life Safety

B. American Society for Testing and Materials
ASTM B 221 Extruded Aluminum

1.04 SYSTEM DESCRIPTION

A. Equipment

B. Window Treatment

C. Entry Mats

PART 2 PRODUCTS

2.02 MATERIALS

A. All materials and manufacturer items shall be new and of first quality and shall be designed and furnished in strict accordance with all of the governing codes, ordinances, and applicable standards.

B. Specific shop equipment, laboratory equipment, and office furniture; to be determined.

C. Window treatment shall consist of 1 inch aluminum slat horizontal blind, supported by braided ladders.

1. Slats tilt by hand, raise and lower by lift cords.

2. Color: Manufacturer's standard color.

D. Entry mats shall be rubber/chord strip fabric tiles (tire strips) 12" x 12".

1. Color: Natural gray-tones.

2. Install in alternating (parquet) pattern.

END OF SECTION

94/3227.0180

THIS PAGE INTENTIONALLY LEFT BLANK

THIS PAGE INTENTIONALLY
LEFT BLANK

WRAP MODULE 2A

DIVISION 13 - SPECIAL CONSTRUCTION

TABLE OF CONTENTS

SECTION	DESCRIPTION
13000	SPECIAL CONSTRUCTION
13070	AIRLOCK
13110	ENCLOSURES
13220	LIQUID WASTE FILTERS
13250	SIMPLE DOUBLE LID SYSTEM
13251	PURGED PORT
13401	CONTROL AND INSTRUMENTATION
13402	CONTROL AND INSTRUMENTATION FOR MECHANICAL EQUIPMENT
13406	BAR CODE IDENTIFICATION
13407	ANNUNCIATOR
13451	HEALTH PHYSICS MONITORS
13452	ISOKINETIC STACK SAMPLER SYSTEM
13461	PLANT MANAGEMENT SYSTEM HARDWARE
13462	PLANT MANAGEMENT SYSTEM SOFTWARE
13531	DRUM NONDESTRUCTIVE ASSAY EQUIPMENT

9413227.0181

THIS PAGE INTENTIONALLY
LEFT BLANK

SECTION 13000

PW 3227.0182

THIS PAGE INTENTIONALLY
LEFT BLANK

THIS PAGE INTENTIONALLY
LEFT BLANK

WRAP MODULE 2A

SPECIFICATION SECTION
FOR
13000 SPECIAL CONSTRUCTION

TABLE OF CONTENTS

PART 1 GENERAL

1.01 SECTION SCOPE
1.02 RELATED SECTIONS
1.03 REFERENCES
1.04 SYSTEM DESCRIPTION
1.05 SUBMITTALS
1.06 DELIVERY, STORAGE AND HANDLING
1.07 SITE CONDITIONS

PART 2 PRODUCTS

2.01 MANUFACTURERS
2.02 MATERIALS
2.03 EQUIPMENT
2.04 COMPONENTS
2.05 FABRICATION
2.06 SHOP QUALITY CONTROL

PART 3 EXECUTION

3.01 PREPARATION
3.02 ERECTION, INSTALLATION AND APPLICATION
3.03 FIELD QUALITY CONTROL
3.04 ADJUSTING AND CLEANING
3.05 DEMONSTRATION
3.06 PROTECTION

WRAP MODULE 2A

SECTION 13000

SPECIAL CONSTRUCTION

PART 1 GENERAL

1.01 SECTION SCOPE

A. This specification establishes the requirements for detailed design and installation of special construction items for WRAP Module 2A.

1.02 RELATED SECTIONS

1.03 REFERENCES

A. American Concrete Institute
ACI 318 — Building Code Requirements for Reinforced Concrete

B. American Society for Civil Engineers
ASCE 7-88 — Minimum Design Loads for Buildings and Other Structures

C. American Institute of Steel Construction
AISC — Manual of Steel Construction

D. American Society for Testing and Materials
ASTM A 36 — Spec. for Structural Steel

E. American Welding Society
AWS D1.1 — Structural Welding Code

F. Metal Building Manufacturers Association
MBMA — Low-Rise Building Systems Manual

G. Hanford Plant Standards
SDC 4.1 Rev. 11 — Architectural - Civil Design Criteria/Design Loads for Facilities

H. UCRL
1.15910 — Design Evaluation Guidelines for Department of Energy Facilities Subjected to Natural Phenomena Hazards

I. International Conference of Building Officials
UBC Uniform Building Code 1991 Edition

1.04 SYSTEM DESCRIPTION

A. Design and construction of an approximately 60,000 sq. ft. metal building system.

1. Design and construction to include concrete footings and foundations; structural steel frame; framing and floor decking for partial second floor; wall and roof panels; and other building shell components as indicated.

2. Components shall include, but not be limited to, exterior "man" doors and frames; aluminum entries and windows; and roof curbs and jacks.

PART 2 PRODUCTS

2.02 MATERIALS

A. All materials and manufactured items shall be new and of first quality and shall be designed and furnished in strict accordance with all of the governing codes, ordinances, and applicable standards.

B. Building foundation shall consist of spread footings and grade beams utilizing 3000 psi concrete.

C. The steel frame shall be a beam and column type.

D. The roof slope shall be at least 1/2 in 12.

E. Eave height of the building shall be 24 feet.

F. Design loading criteria:

- Seismic: UBC Zone 2B, Seismic importance 1.25
- Wind: 70 mph, exposure "C", importance 1.07
- Snow Load: 20 psf
- Collateral Load: 5 psf
- Live load deflection less than 1/180
- Second Floor Live Load: 200 psf HVAC room, 150 psf control/computer room
- Roof Panels: UL class I-90 wind uplift

GW 3227 0185

G. Metal wall and roof panels shall be factory fabricated units consisting of roll-formed, 24 ga. galvanized or aluminum coated steel face and linear sheets chemically bonded to a urethane-modified isocyanurate core.

1. Longitudinal edges of the panels shall be double tongue and grooved with thermal break design; and utilize a concealed anchoring system.

2. Panels shall be FM Class 1 fire rated.

3. Wall panels shall be 36 inches wide x 2 inches thick and have a maximum "U" value of 0.069.

4. Roof panels shall be 36 inches wide x 2.25 inches thick having a standing rib joint design and a maximum "U" value of 0.049.

H. Exterior finish shall consist of a factory applied 0.2 mil epoxy primer and a 0.8 mil Kynar finish coat.

I. Interior finish shall consist of a 0.6 mil polyester enamel.

END OF SECTION

SECTION 13070

9413227.0187

THIS PAGE INTENTIONALLY
LEFT BLANK

THIS PAGE INTENTIONALLY
LEFT BLANK

WRAP MODULE 2A

SPECIFICATION SECTION
FOR
13070 AIRLOCK

TABLE OF CONTENTS

PART 1 GENERAL

1.01 SECTION SCOPE
1.02 RELATED SECTIONS
1.03 REFERENCES
1.04 SYSTEM DESCRIPTION
1.05 SUBMITTALS
1.06 DELIVERY, STORAGE AND HANDLING
1.07 SITE CONDITIONS

PART 2 PRODUCTS

2.01 MANUFACTURERS
2.02 MATERIALS
2.03 EQUIPMENT
2.04 COMPONENTS
2.05 FABRICATION
2.06 SHOP QUALITY CONTROL

PART 3 EXECUTION

3.01 PREPARATION
3.02 ERECTION, INSTALLATION AND APPLICATION
3.03 FIELD QUALITY CONTROL
3.04 ADJUSTING AND CLEANING
3.05 DEMONSTRATION
3.06 PROTECTION

APPENDIX

APPENDIX A DATA SHEETS

94 3227.0188

WRAP MODULE 2A

SECTION 13070

AIRLOCK

PART 1 GENERAL

1.01 SECTION SCOPE

A. This specification establishes the requirements for detailed design, fabrication, installation, start-up, and acceptance testing of an Airlock System for the entry and exit of waste containers to process plants within WRAP 2A.

1.02 RELATED SECTIONS

1.03 REFERENCES

A. American National Standards Institute (ANSI)

B. American Society for Testing and Materials (ASTM)

C. National Electric Code (NEC)

D. AWS D1.1 "Structural Welding Code"

E. NEMA MG-1 Motors and Generators

F. Anti Friction Bearing Manufacturers Association (AFBMA)

1.04 SYSTEM DESCRIPTION

A. The Airlock systems provide the following functions:

1. To maintain radiological containment between different category areas during the transfer of waste containers.

2. To minimize the ventilation volume flows during transfers.

B. General Description

1. Vertically sliding doors at the entrance and exit of the airlock provide the closure to maintain containment between the radiologically different category areas.

9413227.0189

2. The drive system will consist of an electric motor driving through angle gearboxes to verticle screw jacks, one on each side of the door. The jacks operate long leads screws which raise and lower the door through drive nuts mounted on the door. Drives to the gearboxes will incorporate flexible couplings to accommodate misalignment.

C. Construction

1. Shielded Airlock

The doors will be fabricated from carbon steel of a thickness to reduce the dose rate on the outside to the permitted level. Sealing will be achieved by using brush seals with the vertical guides, a brush seal will be fitted along the top of the door opening. A half round hollow rubber threshold seal mounted on the floor will seal against the bottom edge of the door when in the closed position.

2. Unshielded Airlock

The doors will be a double skinned sheet metal construction with an internal framework to provide strength and stability.

3. General Features

A support frame mounted above the airlock will be used to mount the drive components. Where the Airlock provides entry to a higher radiological zone a window and back flow protection filter will be fitted.

D. Control and Instrumentation

1. The drives will be interfaced with Control and Safety interlocks.

2. The control interlocks will consist of switches to limit extremes of travel of the doors and provide an indication of the door status to the Plant Operators.

3. The safety interlocks will prevent movement of the doors if the environmental conditions are not satisfactory. The instrumentation used to provide these interlocks will include, Pressure Drip, Beta in Air and Gamma monitors and container position

0610 2227 46

switches. These would be wired directly into the motor starter circuit.

E. Data Sheets

Equipment Tag Nos. WBS Area Location Numbers and equipment Data Sheets for this description are provided in **APPENDIX A.**

END OF SECTION

91-3227.019

WRAP MODULE 2A

APPENDIX A

EQUIPMENT/INSTRUMENT DATA SHEETS

WBS LOCATION	EQUIPMENT TAG	SERVICE
1105	AL-05-201	Agitated Grout - Drum Entry
1105	AL-05-202	Agitated Grout - Drum Exit
1105	AL-05-203	Vibro Grout - Drum Entry
1105	AL-05-501	Size Reduction - Drum Entry
1105	AL-05-521	Size Reduction - Empty Drum Entry From Transfer Tunnel
1105	AL-05-541	Pug Mill - Empty Drum Exit to Transfer Tunnel
1105	AL-05-561	Box Breakdown - Box Entry
1106	AL-06-101	Special Waste - Empty Drum Exit to Transfer Tunnel
1109	AL-09-101	Shipping Receiving - Drum Entry

9413227.0192

UNITED ENGINEERS & CONSTRUCTORS A Raytheon Company Western Operations	EQUIPMENT DATA SHEET ☒ CDR ☐ TITLE I ☐ TITLE II ☐ TITLE III	ITEM NUMBER AL-05-201	PAGE 1 OF 1

CUSTOMER & LOCATION	PROJECT	UE&C JOB NO. 6237.006	DATE: 04/06/92
DOE-RL/WHC HANFORD, WA	WRAP FACILITY MODULE 2A	ACCOUNT NO.	BY: GBD

REVISIONS (DATE & BY)	A		B		C		D	
	E		F		G		H	

SERVICE	MANUFACTURER	NO. REQ'D.	SOURCE OF QUOTE
GROUT FACILITY AIRLOCK-DRUMS		1	

AIRLOCK

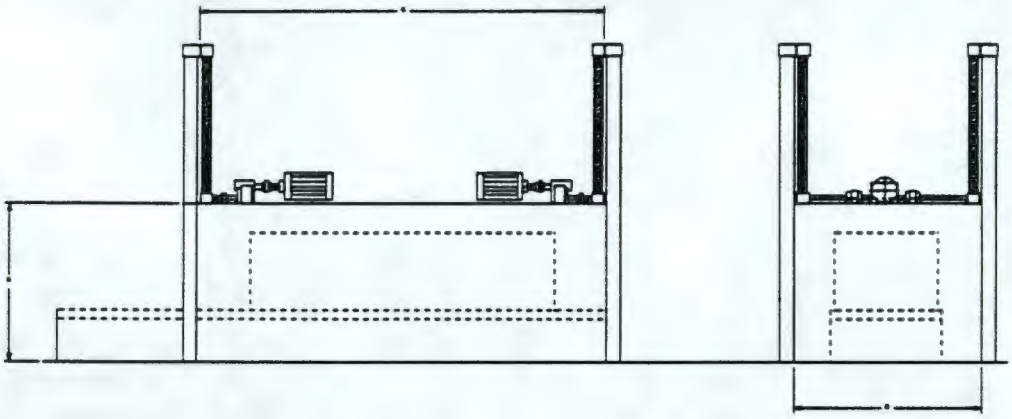

CONDITIONS OF SERVICE		DIMENSIONS	
APPLICATION: PROVIDES CONTAINMENT DURING DRUM ENTRY INTO FACILITY		A: 6'-6"	
UNIT LOAD DESCRIPTION: DRUM SLURRY WASTE--55 GALLON		B: 5'-0"	
UNIT LOAD SIZE: 22.5" DIA X 34.5" HIGH	DUTY: INTERMITTENT	C: 6'-0"	
UNIT LOAD WEIGHT: 1,000 LBS	OPEN/CLOSING SPEED: 25"/MIN		
DOOR WEIGHT: 800 LBS	OPEN/CLOSING TIME: 4 MINS		
CONSTRUCTION			
ENCLOSURE MATERIAL: CARBON STEEL	EMERGENCY CLOSING: REQUIRED		
DOOR MATERIAL: CARBON STEEL	LIMIT SWITCHES: DOOR OPEN/CLOSE		
LIFTING MECHANISM: MECHANICAL ACTUATOR	INTERLOCKS: DOOR, CONVEYOR AND AREA MONITORS		
SIDE/TOP SEALS: BRUSH-NYLON			
BOTTOM SEAL TYPE: HOLLOW 'D' SECT.			
BOTTOM SEAL MATERIAL: RUBBER			
DRIVE: ELECTRIC MOTOR/GEARBOX			
BRAKE: MOTOR MOUNTED			
MOTOR RATINGS: 3 HP			

UNITED ENGINEERS & CONSTRUCTORS A Raytheon Company Western Operations	EQUIPMENT DATA SHEET ☒ CDR ☐ TITLE I ☐ TITLE II ☐ TITLE III	ITEM NUMBER AL-05-202	PAGE 1 OF 1
CUSTOMER & LOCATION DOE-RL/WHC HANFORD, WA	PROJECT WRAP FACILITY MODULE 2A	UE&C JOB NO. 6237.006	DATE: 04/06/92
		ACCOUNT NO.	BY: GBD

REVISIONS (DATE & BY)	A		B		C		D	
	E		F		G		H	

SERVICE	MANUFACTURER	NO. REQ'D.	SOURCE OF QUOTE
GROUT FACILITY AIRLOCK-DRUMS		1	

AIRLOCK

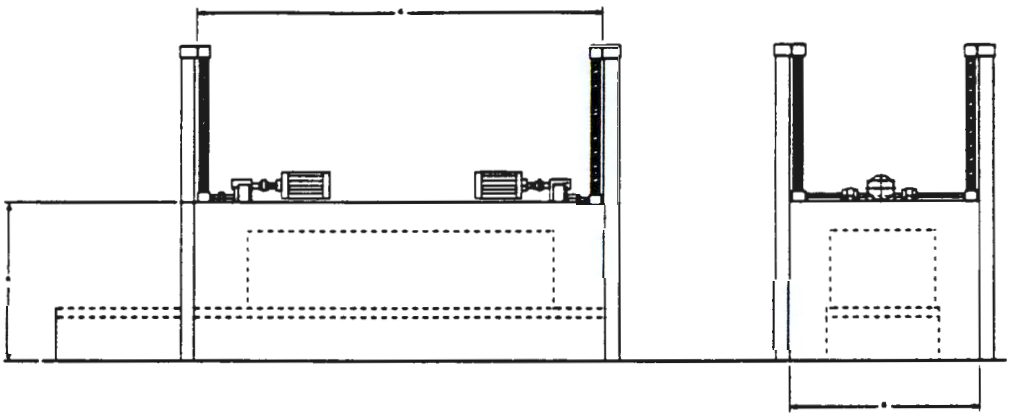

CONDITIONS OF SERVICE		DIMENSIONS	
APPLICATION: PROVIDES CONTAINMENT DURING DRUM ENTRY INTO FACILITY		A: 6'-6"	
UNIT LOAD DESCRIPTION: DRUM SLURRY WASTE–55 GALLON		B: 5'-0"	
UNIT LOAD SIZE: 22.5" DIA X 34.5" HIGH	DUTY: INTERMITTENT	C: 6'-0"	
UNIT LOAD WEIGHT: 1,000 LBS	OPEN/CLOSING SPEED: 25"/MIN		
DOOR WEIGHT: 800 LBS	OPEN/CLOSING TIME: 4 MINS		
CONSTRUCTION			
ENCLOSURE MATERIAL: CARBON STEEL	EMERGENCY CLOSING: REQUIRED		
DOOR MATERIAL: CARBON STEEL	LIMIT SWITCHES: DOOR OPEN/CLOSE		
LIFTING MECHANISM: MECHANICAL ACTUATOR	INTERLOCKS: DOOR, CONVEYOR AND AREA MONITORS		
SIDE/TOP SEALS: BRUSH-NYLON			
BOTTOM SEAL TYPE: HOLLOW 'D' SECT.			
BOTTOM SEAL MATERIAL: RUBBER			
DRIVE: ELECTRIC MOTOR/GEARBOX			
BRAKE: MOTOR MOUNTED			
MOTOR RATINGS: 3 HP			

UNITED ENGINEERS & CONSTRUCTORS A Raytheon Company Western Operations	EQUIPMENT DATA SHEET ☒ CDR ☐ TITLE I ☐ TITLE II ☐ TITLE III	ITEM NUMBER AL-05-203	PAGE 1 OF 1
CUSTOMER & LOCATION DOE-RL/WHC HANFORD, WA	PROJECT WRAP FACILITY MODULE 2A	UE&C JOB NO. 6237.006	DATE: 04/06/92
		ACCOUNT NO.	BY: GBD

REVISIONS (DATE & BY)	A		B		C		D	
	E		F		G		H	

SERVICE	MANUFACTURER	NO. REQ'D.	SOURCE OF QUOTE
GROUT FACILITY AIRLOCK-DRUMS		1	

AIRLOCK

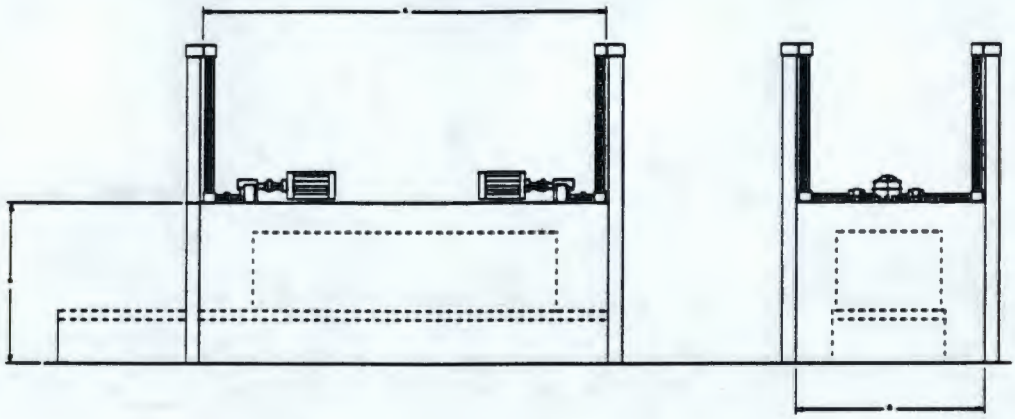

CONDITIONS OF SERVICE		DIMENSIONS	
APPLICATION: PROVIDES CONTAINMENT DURING DRUM TRANSFER FROM CELL		A: 6'-6"	
UNIT LOAD DESCRIPTION: DRUM SLURRY WASTE--55 GALLON		B: 5'-0"	
UNIT LOAD SIZE: 22.5" DIA X 34.5" HIGH	DUTY: INTERMITTENT	C: 6'-0"	
UNIT LOAD WEIGHT: 1,000 LBS	OPEN/CLOSING SPEED: 25"/MIN		
DOOR WEIGHT: 800 LBS	OPEN/CLOSING TIME: 4 MINS		
CONSTRUCTION			
ENCLOSURE MATERIAL: CARBON STEEL	EMERGENCY CLOSING: REQUIRED		
DOOR MATERIAL: CARBON STEEL	LIMIT SWITCHES: DOOR OPEN/CLOSE		
LIFTING MECHANISM: MECHANICAL ACTUATOR	INTERLOCKS: DOOR, CONVEYOR AND AREA MONITORS		
SIDE/TOP SEALS: BRUSH-NYLON			
BOTTOM SEAL TYPE: HOLLOW 'D' SECT.			
BOTTOM SEAL MATERIAL: RUBBER			
DRIVE: ELECTRIC MOTOR/GEARBOX			
BRAKE: MOTOR MOUNTED			
MOTOR RATINGS: 3 HP			

UNITED ENGINEERS & CONSTRUCTORS A Raytheon Company Western Operations	EQUIPMENT DATA SHEET ☒ CDR ☐ TITLE I ☐ TITLE II ☐ TITLE III	ITEM NUMBER AL-05-501	PAGE 1 OF 1
CUSTOMER & LOCATION DOE-RL/WHC HANFORD, WA	PROJECT WRAP FACILITY MODULE 2A	UE&C JOB NO. 6237.006	DATE: 04/06/92
		ACCOUNT NO.	BY: GBD

REVISIONS (DATE & BY)	A		B		C		D	
	E		F		G		H	

SERVICE	MANUFACTURER	NO. REQ'D.	SOURCE OF QUOTE
SIZE REDUCTION AIRLOCK DRUMS		1	

AIRLOCK

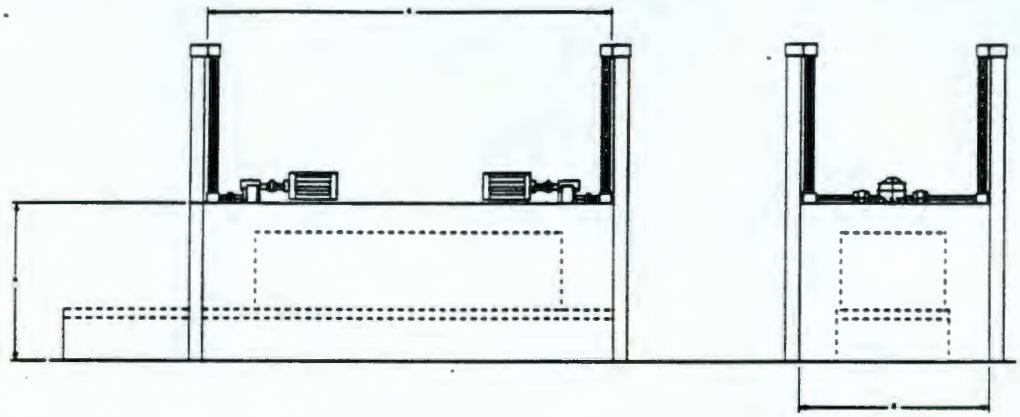

CONDITIONS OF SERVICE		DIMENSIONS	
APPLICATION: PROVIDES CONTAINMENT DURING DRUM TRANSFER INTO ENCLOSURE		A: 6'-6"	
UNIT LOAD DESCRIPTION: WASTE DRUMS–55 GALLON		B: 5'-0"	
UNIT LOAD SIZE: 26" DIA X 39" HIGH	DUTY: INTERMITTENT	C: 6'-0"	
UNIT LOAD WEIGHT: 3,000 LBS	OPEN/CLOSING SPEED: 25"/MIN		
DOOR WEIGHT: 800 LBS	OPEN/CLOSING TIME: 4 MINS		
CONSTRUCTION			
ENCLOSURE MATERIAL: CARBON STEEL	EMERGENCY CLOSING: REQUIRED		
DOOR MATERIAL: CARBON STEEL	LIMIT SWITCHES: DOOR OPEN/CLOSE		
LIFTING MECHANISM: MECHANICAL ACTUATOR	INTERLOCKS: DOOR, CONVEYOR AND AREA MONITORS		
SIDE/TOP SEALS: BRUSH-NYLON			
BOTTOM SEAL TYPE: HOLLOW 'D' SECT.			
BOTTOM SEAL MATERIAL: RUBBER			
DRIVE: ELECTRIC MOTOR/GEARBOX			
BRAKE: MOTOR MOUNTED			
MOTOR RATINGS: 5 HP			

9413227.0196

UNITED ENGINEERS & CONSTRUCTORS A Raytheon Company Western Operations	EQUIPMENT DATA SHEET ☒ CDR ☐ TITLE I ☐ TITLE II ☐ TITLE III	ITEM NUMBER AL-05-521	PAGE 1 OF 1
CUSTOMER & LOCATION DOE-RL/WHC HANFORD, WA	PROJECT WRAP FACILITY MODULE 2A	UE&C JOB NO. 6237.006	DATE: 05/18/92
		ACCOUNT NO.	BY: GBD

REVISIONS (DATE & BY)	A		B		C		D	
	E		F		G		H	

SERVICE	MANUFACTURER	NO. REQ'D.	SOURCE OF QUOTE
TRANSFER TUNNEL AIRLOCK--SIZE REDUCTION		1	

AIRLOCK

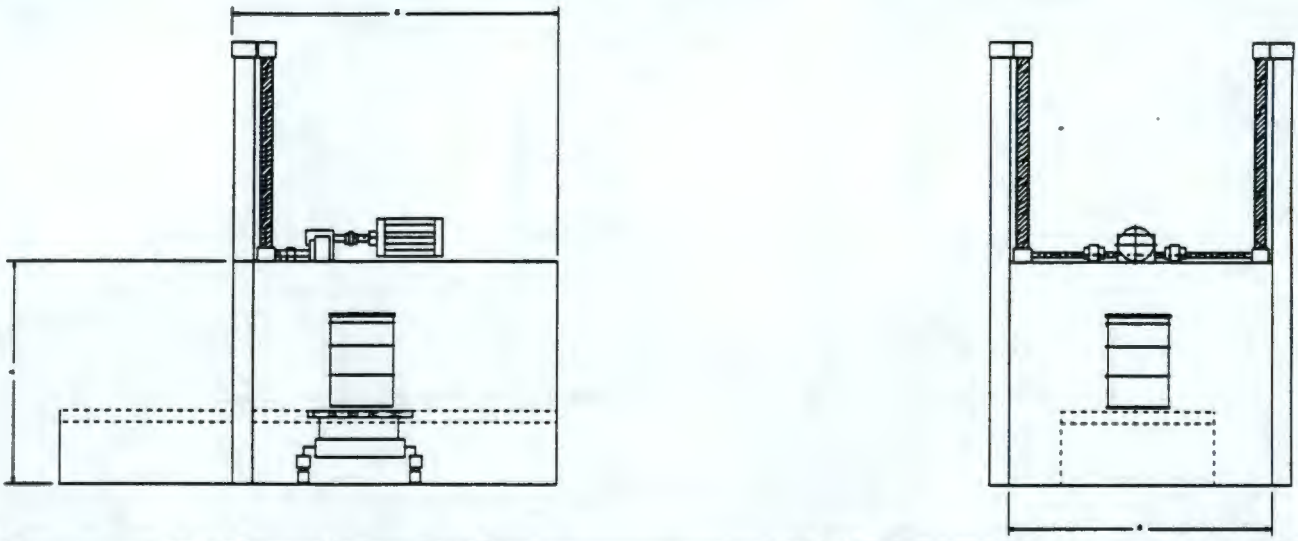

CONDITIONS OF SERVICE		DIMENSIONS	
APPLICATION: PROVIDES CONTAINMENT DURING DRUM TRANSFER INTO SIZE REDUCATION ENCLOSURE		A: 6'-6"	
UNIT LOAD DESCRIPTION: WASTE DRUMS--85 GALLON MAX		B: 5'-0"	
UNIT LOAD SIZE; 26" DIA X 39" HIGH	DUTY: INTERMITTENT	C: 6'-0"	
UNIT LOAD WEIGHT: 3,000 LBS	OPEN/CLOSING SPEED: 25"/MIN		
DOOR WEIGHT: 800 LBS	OPEN/CLOSING TIME: 4 MINS		
CONSTRUCTION			
ENCLOSURE MATERIAL: CARBON STEEL	EMERGENCY CLOSING: REQUIRED		
DOOR MATERIAL: CARBON STEEL	LIMIT SWITCHES: DOOR OPEN/CLOSE		
LIFTING MECHANISM: MECHANICAL ACTUATOR	INTERLOCKS: DOOR, CONVEYOR AND AREA MONITORS		
SIDE/TOP SEALS: BRUSH-NYLON			
BOTTOM SEAL TYPE: HOLLOW 'D' SECT.			
BOTTOM SEAL MATERIAL: RUBBER			
DRIVE: ELECTRIC MOTOR/GEARBOX			
BRAKE: MOTOR MOUNTED			
MOTOR RATINGS: 3 HP			

UNITED ENGINEERS & CONSTRUCTORS A Raytheon Company Western Operations	EQUIPMENT DATA SHEET ☒ CDR ☐ TITLE I ☐ TITLE II ☐ TITLE III	ITEM NUMBER AL-05-541	PAGE 1 OF 1

CUSTOMER & LOCATION	PROJECT	UE&C JOB NO. 6237.006	DATE: 05/18/92
DOE-RL/WHC HANFORD, WA	WRAP FACILITY MODULE 2A	ACCOUNT NO.	BY: GBD

REVISIONS (DATE & BY)	A		B		C		D	
	E		F		G		H	

SERVICE	MANUFACTURER	NO. REQ'D.	SOURCE OF QUOTE
TRANSFER TUNNEL AIRLOCK--SPECIAL WASTE		1	

AIRLOCK

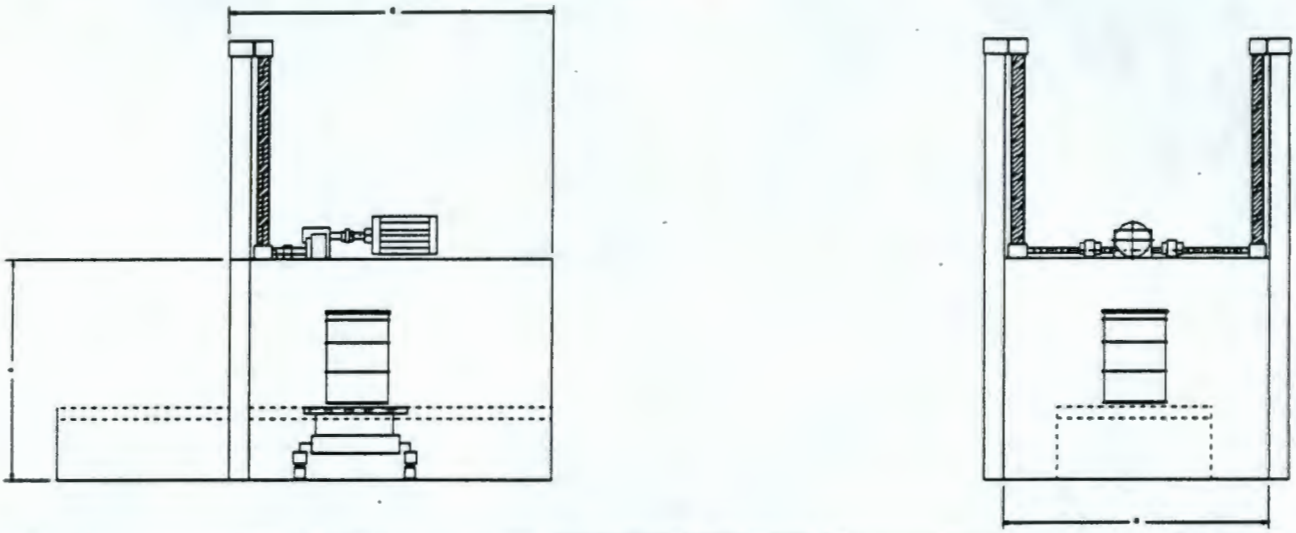

CONDITIONS OF SERVICE		DIMENSIONS	
APPLICATION: PROVIDES CONTAINMENT DURING DRUM TRANSFER FROM PUG MILL ENCLOSURE		A: 6'-6"	
UNIT LOAD DESCRIPTION: WASTE DRUMS--85 GALLON MAX		B: 5'-0"	
UNIT LOAD SIZE: 26" DIA X 39" HIGH	DUTY: INTERMITTENT	C: 6'-0"	
UNIT LOAD WEIGHT: 3,000 LBS	OPEN/CLOSING SPEED: 25"/MIN		
DOOR WEIGHT: 800 LBS	OPEN/CLOSING TIME: 4 MINS		
CONSTRUCTION			
ENCLOSURE MATERIAL: CARBON STEEL	EMERGENCY CLOSING: REQUIRED		
DOOR MATERIAL: CARBON STEEL	LIMIT SWITCHES: DOOR OPEN/CLOSE		
LIFTING MECHANISM: MECHANICAL ACTUATOR	INTERLOCKS: DOOR, CONVEYOR AND AREA MONITORS		
SIDE/TOP SEALS: BRUSH-NYLON			
BOTTOM SEAL TYPE: HOLLOW 'D' SECT.			
BOTTOM SEAL MATERIAL: RUBBER			
DRIVE: ELECTRIC MOTOR/GEARBOX			
BRAKE: MOTOR MOUNTED			
MOTOR RATINGS: 3 HP			

9413227.0198

UNITED ENGINEERS & CONSTRUCTORS A Raytheon Company Western Operations	EQUIPMENT DATA SHEET ☒ CDR ☐ TITLE I ☐ TITLE II ☐ TITLE III	ITEM NUMBER AL-05-561	PAGE 1 OF 1
CUSTOMER & LOCATION DOE-RL/WHC HANFORD, WA	PROJECT WRAP FACILITY MODULE 2A	UE&C JOB NO. 6237.006	DATE: 04/06/92
		ACCOUNT NO.	BY: GBD

REVISIONS (DATE & BY)								
	A		B		C		D	
	E		F		G		H	

SERVICE	MANUFACTURER	NO. REQ'D.	SOURCE OF QUOTE
BOX BREAKDOWN AIRLOCK-SHIELDED		1	

AIRLOCK

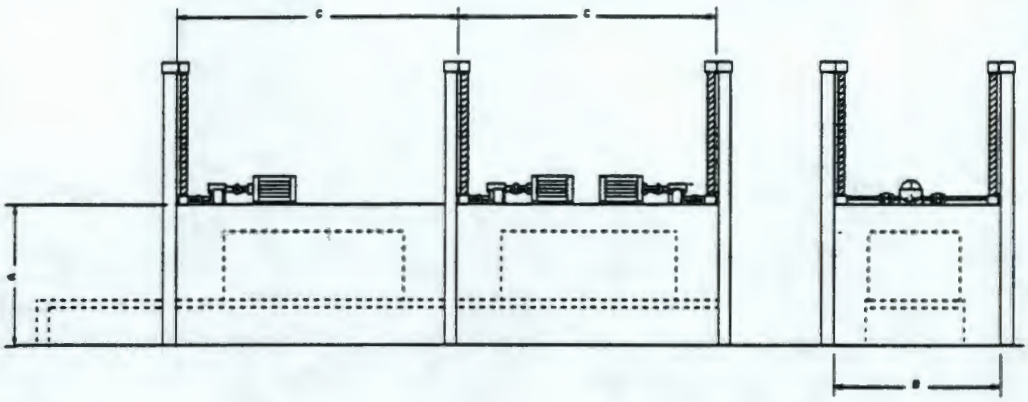

CONDITIONS OF SERVICE		DIMENSIONS	
APPLICATION: PROVIDES CONTAINMENT DURING BOX TRANSFER INTO ENCLOSURE		A: 12'-0"	
UNIT LOAD DESCRIPTION: BOXED WASTE ITEMS AND 110 GALLON DRUMS		B: 8'-0"	
UNIT LOAD SIZE: 5' X 5' X 9'	DUTY: INTERMITTENT	C: 8'-0"	
UNIT LOAD WEIGHT: 12,000 LBS	OPEN/CLOSING SPEED: 25"/MIN		
DOOR WEIGHT: 2 TONS	OPEN/CLOSING TIME: 4 MIN		
CONSTRUCTION			
ENCLOSURE MATERIAL: CARBON STEEL	EMERGENCY CLOSING: REQUIRED		
DOOR MATERIAL: CARBON STEEL	LIMIT SWITCHES: DOOR OPEN/CLOSE		
LIFTING MECHANISM: MEACHANICAL ACTUATOR	INTERLOCKS: DOOR, CONVEYOR AND AREA MONITORS		
SIDE/TOP SEALS: BRUSH-NYLON			
BOTTOM SEAL TYPE: HOLLOW 'D' SECT.			
BOTTOM SEAL MATERIAL: RUBBER			
DRIVE: ELECTRIC MOTOR/GEARBOX			
BRAKE: MOTOR MOUNTED			
MOTOR RATING: 7.5 HP			

UNITED ENGINEERS & CONSTRUCTORS A Raytheon Company Western Operations	EQUIPMENT DATA SHEET ☒ CDR ☐ TITLE I ☐ TITLE II ☐ TITLE III	ITEM NUMBER AL-06-101	PAGE 1 OF 1

CUSTOMER & LOCATION	PROJECT	UE&C JOB NO. 6237.006	DATE: 05/18/92
DOE-RL/WHC HANFORD, WA	WRAP FACILITY MODULE 2A	ACCOUNT NO.	BY: GBD

REVISIONS (DATE & BY)	A		B		C		D	
	E		F		G		H	

SERVICE	MANUFACTURER	NO. REQ'D.	SOURCE OF QUOTE
TRANSFER TUNNEL AIRLOCK - SPECIAL WASTE		1	

AIRLOCK

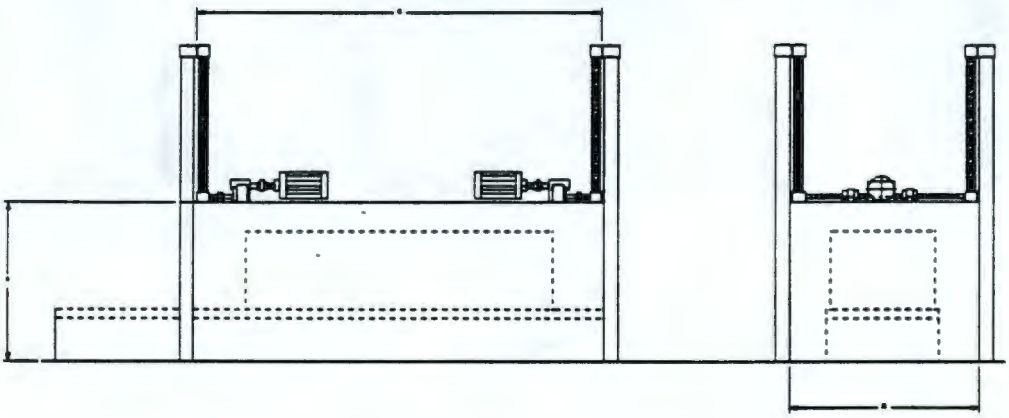

CONDITIONS OF SERVICE		DIMENSIONS	
APPLICATION: PROVIDES CONTAINMENT DURING DRUM TRANSFER FROM SPECIAL WASTE ENCLOSURE		A: 6'-6"	
UNIT LOAD DESCRIPTION: DRUM WASTE--55 GALLON MAX		B: 5'-0"	
UNIT LOAD SIZE: 26" DIA X 39" HIGH	DUTY: INTERMITTENT	C: 6'-0"	
UNIT LOAD WEIGHT: 3,000 LBS	OPEN/CLOSING SPEED: 25"/MIN		
DOOR WEIGHT: 800 LBS	OPEN/CLOSING TIME: 4 MINS		
CONSTRUCTION			
ENCLOSURE MATERIAL: CARBON STEEL	EMERGENCY CLOSING: REQUIRED		
DOOR MATERIAL: CARBON STEEL	LIMIT SWITCHES: DOOR OPEN/CLOSE		
LIFTING MECHANISM: MECHANICAL ACTUATOR	INTERLOCKS: DOOR, CONVEYOR AND AREA MONITORS		
SIDE/TOP SEALS: BRUSH-NYLON			
BOTTOM SEAL TYPE: HOLLOW 'D' SECT.			
BOTTOM SEAL MATERIAL: RUBBER			
DRIVE: ELECTRIC MOTOR/GEARBOX			
BRAKE: MOTOR MOUNTED			
MOTOR RATINGS: 3 HP			

9413227.0200

UNITED ENGINEERS & CONSTRUCTORS A Raytheon Company Western Operations	EQUIPMENT DATA SHEET ☒ CDR ☐ TITLE I ☐ TITLE II ☐ TITLE III	ITEM NUMBER AL-09-101	PAGE 1 OF 1
CUSTOMER & LOCATION DOE-RL/WHC HANFORD, WA	PROJECT WRAP FACILITY MODULE 2A	UE&C JOB NO. 6237.006 / ACCOUNT NO.	DATE: 06/01/92 / BY: GBD

REVISIONS (DATE & BY:)	A		B		C		D	
	E		F		G		H	

SERVICE	MANUFACTURER	NO. REQ'D.	SOURCE OF QUOTE
SHIPPING AND RECEIVING AIRLOCK		1	

AIRLOCK

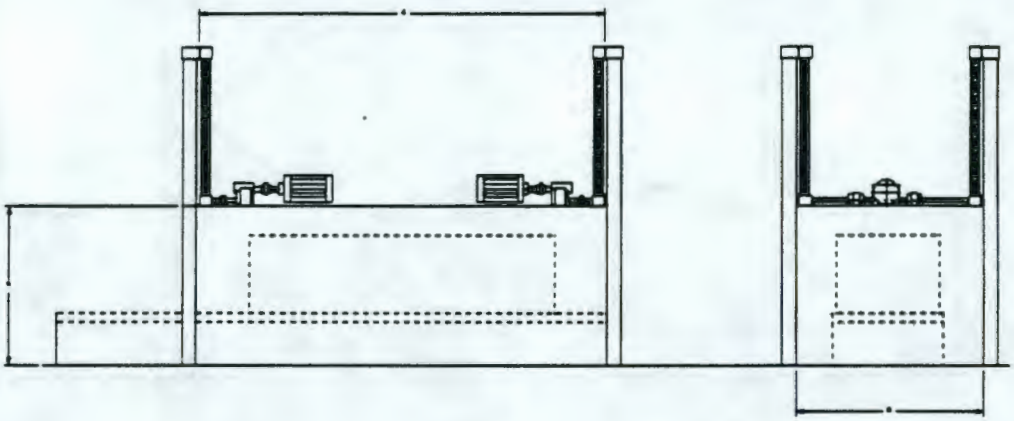

CONDITIONS OF SERVICE		DIMENSIONS	
APPLICATION: PROVIDES CONTAINMENT DURING TRANSFER OF DRUMS		A: 6'-6"	
UNIT LOAD DESCRIPTION: DRUM WASTE FOR PROCESSING		B: 10'-0"	
UNIT LOAD SIZE: 26" DIA X 39" HIGH	DUTY: INTERMITTENT	C:	
UNIT LOAD WEIGHT: 3,000 LBS	OPEN/CLOSING SPEED: 25"/MIN		
DOOR WEIGHT: 1,600 LBS	OPEN/CLOSING TIME: 4 MINS		
CONSTRUCTION			
ENCLOSURE MATERIAL: CARBON STEEL	EMERGENCY CLOSING: REQUIRED		
DOOR MATERIAL: CARBON STEEL	LIMIT SWITCHES: DOOR OPEN/CLOSE		
LIFTING MECHANISM: MECHANICAL ACTUATOR	INTERLOCKS: DOOR, CONVEYOR AND AREA MONITORS		
SIDE/TOP SEALS: BRUSH-NYLON			
BOTTOM SEAL TYPE: HOLLOW 'D' SECT.			
BOTTOM SEAL MATERIAL: RUBBER			
DRIVE: ELECTRIC MOTOR/GEARBOX			
BRAKE: MOTOR MOUNTED			
MOTOR RATINGS: 3 HP			

9413227.0201

SECTION 13110

9H3227.0202

THIS PAGE INTENTIONALLY
LEFT BLANK

WRAP MODULE 2A

SPECIFICATION SECTION
FOR
13110 ENCLOSURE

TABLE OF CONTENTS

PART 1 GENERAL

1.01 SECTION SCOPE
1.02 RELATED SECTIONS
1.03 REFERENCES
1.04 SYSTEM DESCRIPTION
1.05 SUBMITTALS
1.06 DELIVERY, STORAGE AND HANDLING
1.07 SITE CONDITIONS

PART 2 PRODUCTS

2.01 MANUFACTURERS
2.02 MATERIALS
2.03 EQUIPMENT
2.04 COMPONENTS
2.05 FABRICATION
2.06 SHOP QUALITY CONTROL

PART 3 EXECUTION

3.01 PREPARATION
3.02 ERECTION, INSTALLATION AND APPLICATION
3.03 FIELD QUALITY CONTROL
3.04 ADJUSTING AND CLEANING
3.05 DEMONSTRATION
3.06 PROTECTION

APPENDIX

APPENDIX A DATA SHEETS

WRAP MODULE 2A

SECTION 13110

ENCLOSURES

PART 1 GENERAL

1.01 SECTION SCOPE

A. This specification establishes the requirements for detailed design, fabrication, installation, start-up, and acceptance testing of process enclosures for WRAP 2A.

1.02 RELATED SECTIONS

1.03 REFERENCES

A. American National Standards Institution (ANSI)

B. American Society for Testing and Materials (ASTM)

C. National Electric Code (NEC)

D. AWS D1.1 "Structural Welding Code"

1.04 SYSTEM DESCRIPTION

A. General Description

1. Enclosures provide primary containment during process operations by enclosing the major item of equipment. Entry and exit of waste containers is through ports which maintain the integrity of containment by ensuring a high airflow velocity into the enclosure. Visual process monitoring is made possible by windows located adjacent to the equipment, gloveports are provided at each window location to enable direct access for process or maintenance operations.

2. Access panels are included for removal of equipment to carry out major maintenance operation or replacement.

3. Utilities are supplied to the enclosure by sealed through wall penetration, lighting is mounted externally, typically roof mounted.

4. Shielding is incorporated into the enclosure to minimize dose uptake in the areas occupied by plant

9413227.0204

operations for routine process activities. Shield plugs will be provided for gloveports when not in use.

B. Construction

1. The enclosures are constructed in stainless steel and are built up in modules which are flanged and bolted using gaskets at the joints. Support is provided by externally mounted steel sections. Internally the enclosures will avoid containment traps wherever possible by rounding off internal corners and providing smooth surfaces.

2. Equipment mounts will be included within the enclosure which will be strengthened locally where necessary by increasing the wall thickness or providing additional external supports.

C. Data Sheets

Equipment Tag Nos. WBS Area Location Numbers and equipment data sheets for this description are provided in **Appendix A.**

9413227.0205

END OF SECTION

WRAP MODULE 2A

APPENDIX A

EQUIPMENT/INSTRUMENT DATA SHEETS

WBS LOCATION	EQUIPMENT TAG	SERVICE
1105	GB-05-521	Shredder/Repack Enclosure
1105	GB-05-522	Transfer Tunnel Enclosure
1105	GB-05-541	Pug Mill Enclosure
1105	GB-05-401	Polymer Encapsulation Enclosure
1105	GB-05-201	Vibro Grout Enclosure
1105	GB-05-600	Sampling Enclosure
1105	GB-05-601A,B,C,D	Sample Area Fumehoods
1106	GB-06-101	Shredder Enclosure
1106	GB-06-201	Amalgamation Enclosure
1106	GB-06-202	Evaporation Enclosure
1106	GB-06-301	Reactive Metals Enclosure

9413227.0206

UNITED ENGINEERS & CONSTRUCTORS A Raytheon Company Western Operations	EQUIPMENT DATA SHEET ☒ CDR ☐ TITLE I ☐ TITLE II ☐ TITLE III	ITEM NUMBER GB-05-521	PAGE 1 OF 5

CUSTOMER & LOCATION	PROJECT	UE&C JOB NO. 6237.006	DATE: 05/13/92
DOE-RL/WHC HANFORD, WA	WRAP FACILITY MODULE 2A	ACCOUNT NO.	BY: SAS

REVISIONS (DATE & BY)	A		B		C		D	
	E		F		G		H	

SERVICE	MANUFACTURER	NO. REQ'D.	SOURCE OF QUOTE
SHREDDING & REPACK ENCL (ENTRY)		1	

PROCESS GLOVEBOX

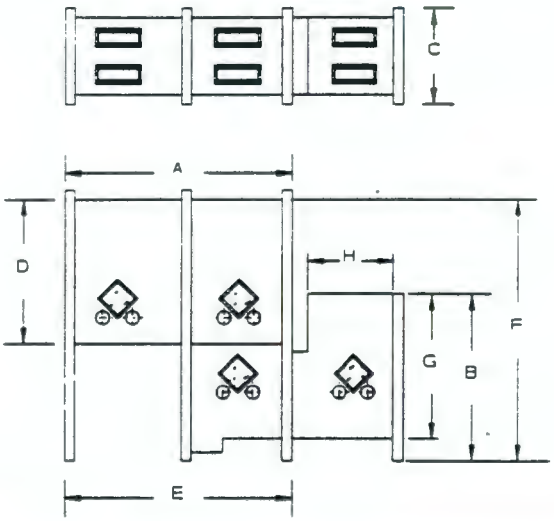

CONDITIONS OF SERVICE		DIMENSIONS	
APPLICATION: WASTE DRUMS ENTRY INTO CONTAINMNT FOR PROCESSING		A:	F:
UNIT LOAD DESCRIPTION: 55 AND 85 GAL DRUMS CONTAINING LLRMW		B:	G:
UNIT LOAD SIZE: 26" DIA X 39" HIGH	DUTY: 8 HRS/DAY	C:	H:
UNIT LOAD WEIGHT: 3,000 LBS	WORKING PRESSURE: .75-1.0" WATER	D:	I:
LOCATION: SIZE REDUCTION & REPACK CELL	LEAK RATE: 0-3 VOL %/HR IN 12 HRS	E:	J:
RATED CAPACITY: 2 TONS	NEC AREA CLASS: UNCLASSIFIED		

CONSTRUCTION			
CONSTRUCTION MATERIAL: 7 GA, 304 SS	FLATNESS OVERALL: 1/16"/FT		
TYPE OF CONTROL: PLC	FLATNESS SEALING SURFACES: 1/32"/FT		
SURFACE FINISH: 2B	GASKETS: 30-60 DUROMETER		
WELD FINISH: FLUSH 2B	VIEWING WINDOWS: 1/4" SAFETY W/CHANNEL GASKET		
AVAILABLE POWER (VOLTS/PHASE/HZ): 460/3/60	SHIELDING WINDOWS: NONE		
STIFFENERS: 2X4 7 GA SKIP WELDED	TOLERANCES: 0-36" +/- 1/16"		
SHIELDING: NONE	TOLERANCES: 36-60" +/- 1/8"		
:	TOLERANCES: BEYOND 60" +/- 3/16"		

9413227.0207

UNITED ENGINEERS & CONSTRUCTORS A Raytheon Company Western Operations	EQUIPMENT DATA SHEET ☒ CDR ☐ TITLE I ☐ TITLE II ☐ TITLE III	ITEM NUMBER GB-05-521	PAGE 2 OF 5

CUSTOMER & LOCATION	PROJECT	UE&C JOB NO. 6237.006	DATE: 05/13/92
DOE-RL/WHC HANFORD, WA	WRAP FACILITY MODULE 2A	ACCOUNT NO.	BY: SAS

REVISIONS (DATE & BY)	A		B		C		D	
	E		F		G		H	

SERVICE	MANUFACTURER	NO. REQ'D.	SOURCE OF QUOTE
SHREDDING & REPACK ENCL (REPACK SORT)		1	

PROCESS GLOVEBOX

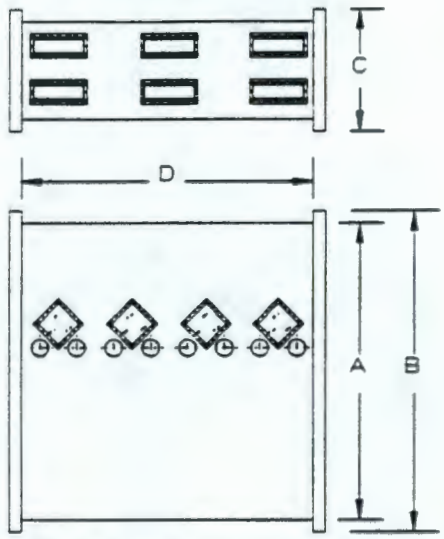

CONDITIONS OF SERVICE		DIMENSIONS	
APPLICATION: WASTE DRUMS EMPTIED, INSPECTED AND SORTED PRIOR TO REPACKING		A:	F:
UNIT LOAD DESCRIPTION: LLRMW WASTE FROM 55 & 85 GAL DRUMS		B:	G:
UNIT LOAD SIZE: 26" DIA X 39" HIGH	DUTY: 8 HRS/DAY	C:	H:
UNIT LOAD WEIGHT: 3,000 LBS	WORKING PRESSURE: .75-1.0" WATER	D:	I:
LOCATION: SIZE REDUCTION & REPACK CELL	LEAK RATE: 0-3 VOL %/HR IN 12 HRS	E:	J:
RATED CAPACITY: 2 TONS	NEC AREA CLASS: UNCLASSIFIED		
CONSTRUCTION			
CONSTRUCTION MATERIAL: 7 GA, 304 SS	FLATNESS OVERALL: 1/16"/FT		
TYPE OF CONTROL: PLC	FLATNESS SEALING SURFACES: 1/32"/FT		
SURFACE FINISH: 2B	GASKETS: NEOPRENE 30-60 DUROMETER		
WELD FINISH: FLUSH 2B	VIEWING WINDOWS: 1/4" SAFETY W/CHANNEL GASKET		
AVAILABLE POWER (VOLTS/PHASE/HZ): 460/3/60	SHIELDING WINDOWS: 1/4" LEAD W/SS CHANNEL EDGE		
STIFFENERS: 2X4 7 GA SKIP WELDED	TOLERANCES: 0-36" +/- 1/16"		
SHIELDING: BONDED .5" LEAD 2/BONDED	TOLERANCES: 36-60" +/- 1/8"		
: 16 GA OUTER SKIN	TOLERANCES: BEYOND 60" +/- 3/16"		

UNITED ENGINEERS & CONSTRUCTORS A Raytheon Company Western Operations	EQUIPMENT DATA SHEET ☒ CDR ☐ TITLE I ☐ TITLE II ☐ TITLE III	ITEM NUMBER GB-05-521	PAGE 3 OF 5

CUSTOMER & LOCATION	PROJECT	UE&C JOB NO. 6237.006	DATE: 05/13/92
DOE-RL/WHC HANFORD, WA	WRAP FACILITY MODULE 2A	ACCOUNT NO.	BY: SAS

REVISIONS (DATE & BY)	A		B		C		D	
	E		F		G		H	

SERVICE	MANUFACTURER	NO. REQ'D.	SOURCE OF QUOTE
SHREDDING & REPACK ENCL (SHRED SORT)		1	

PROCESS GLOVEBOX

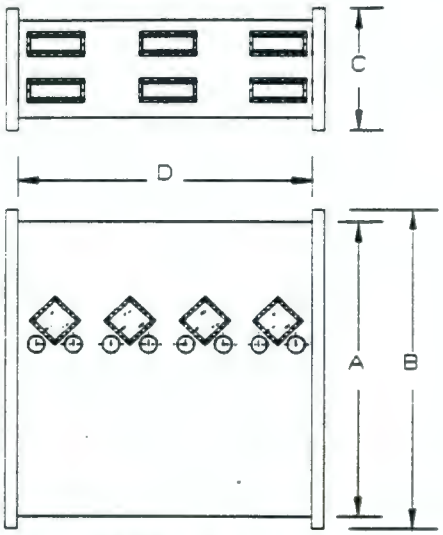

CONDITIONS OF SERVICE		DIMENSIONS	
APPLICATION: WASTE DRUMS EMPTIED, INSPECTED AND SORTED PRIOR TO SHREDDING		A:	F:
UNIT LOAD DESCRIPTION: LLRMW WASTE FROM 55 & 85 GAL DRUMS		B:	G:
UNIT LOAD SIZE: 26" DIA X 39" HIGH	DUTY: 8 HRS/DAY	C:	H:
UNIT LOAD WEIGHT: 3,000 LBS	WORKING PRESSURE: .75-1.0" WATER	D:	I:
LOCATION: SIZE REDUCTION & REPACK CELL	LEAK RATE: 0.3 VOL %/HR IN 12 HRS	E:	J:
RATED CAPACITY: 2 TONS	NEC AREA CLASS: UNCLASSIFIED		
CONSTRUCTION			
CONSTRUCTION MATERIAL: 7 GA, 304 SS	FLATNESS OVERALL: 1/16"/FT		
TYPE OF CONTROL: PLC	FLATNESS SEALING SURFACES: 1/32"/FT		
SURFACE FINISH: 2B	GASKETS: NEOPRENE 30-60 DUROMETER		
WELD FINISH: FLUSH 2B	VIEWING WINDOWS: 1/4" SAFETY W/CHANNEL GASKET		
AVAILABLE POWER (VOLTS/PHASE/HZ): 460/3/60	SHIELDING WINDOWS: NONE		
STIFFENERS: 2X4 7 GA SKIP WELDED	TOLERANCES: 0-36" +/- 1/16"		
SHIELDING: NONE	TOLERANCES: 36-60" +/- 1/8"		
:	TOLERANCES: BEYOND 60" +/- 3/16"		

9413227.0209

UNITED ENGINEERS & CONSTRUCTORS A Raytheon Company Western Operations	EQUIPMENT DATA SHEET ☒ CDR ☐ TITLE I ☐ TITLE II ☐ TITLE III	ITEM NUMBER GB-05-521	PAGE 4 OF 5

CUSTOMER & LOCATION	PROJECT	UE&C JOB NO. 6237.006	DATE: 05/13/92
DOE-RL/WHC HANFORD, WA	WRAP FACILITY MODULE 2A	ACCOUNT NO.	BY: SAS

REVISIONS (DATE & BY)	A		B		C		D	
	E		F		G		H	

SERVICE	MANUFACTURER	NO. REQ'D.	SOURCE OF QUOTE
SHREDDING & REPACK ENCL (SHREDDERS)		1	

PROCESS GLOVEBOX

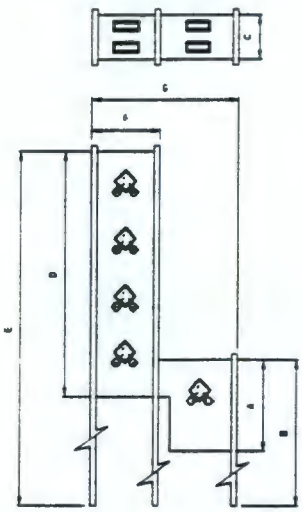

CONDITIONS OF SERVICE		DIMENSIONS	
APPLICATION: TO CONTAIN SHREDDERS		A:	F:
UNIT LOAD DESCRIPTION: LLRMW WASTE FROM 55 & 85 GAL DRUMS		B:	G:
UNIT LOAD SIZE: 26" DIA X 39" HIGH	DUTY: 8 HRS/DAY	C:	H:
UNIT LOAD WEIGHT: 3,000 LBS	WORKING PRESSURE: .75-1.0" WATER	D:	I:
LOCATION: SIZE REDUCTION & REPACK CELL	LEAK RATE: 0-3 VOL %/HR IN 12 HRS	E:	J:
RATED CAPACITY: 2 TONS	NEC AREA CLASS: UNCLASSIFIED		
CONSTRUCTION			
CONSTRUCTION MATERIAL: 7 GA, 304 SS	FLATNESS OVERALL: 1/16"/FT		
TYPE OF CONTROL: PLC	FLATNESS SEALING SURFACES: 1/32"/FT		
SURFACE FINISH: 2B	GASKETS: NEOPRENE 30-60 DUROMETER		
WELD FINISH: FLUSH 2B	VIEWING WINDOWS: 1/4" SAFETY W/CHANNEL GASKET		
AVAILABLE POWER (VOLTS/PHASE/HZ): 460/3/60	SHIELDING WINDOWS: 1/4" LEAD W/SS CHANNEL EDGE		
STIFFENERS: 2X4 7 GA SKIP WELDED	TOLERANCES: 0-36" +/- 1/16"		
SHIELDING: BONDED 1/2" LEAD 2/BONDED	TOLERANCES: 36-60" +/- 1/8"		
: 16 GA OUTER SKIN	TOLERANCES: BEYOND 60" +/- 3/16"		

UNITED ENGINEERS & CONSTRUCTORS A Raytheon Company Western Operations	EQUIPMENT DATA SHEET ☒ CDR ☐ TITLE I ☐ TITLE II ☐ TITLE III	ITEM NUMBER GB-05-521	PAGE 5 OF 5

CUSTOMER & LOCATION	PROJECT	UE&C JOB NO. 6237.006	DATE: 05/13/92
DOE-RL/WHC HANFORD, WA	WRAP FACILITY MODULE 2A	ACCOUNT NO.	BY: SAS

REVISIONS (DATE & BY)	A		B		C		D	
	E		F		G		H	

SERVICE	MANUFACTURER	NO. REQ'D.	SOURCE OF QUOTE
SHREDDING & REPACK ENCL (EXIT)		1	

PROCESS GLOVEBOX

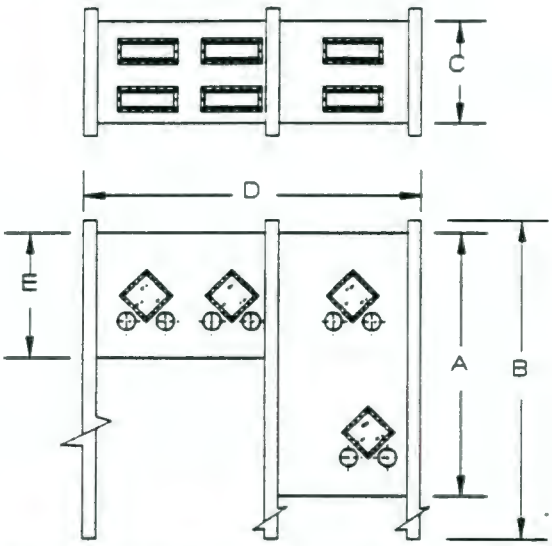

CONDITIONS OF SERVICE		DIMENSIONS	
APPLICATION: CONTAINING OPERATION FOR LOADING WASTE INTO NEW DRUMS		A:	F:
UNIT LOAD DESCRIPTION: 55 GAL DRUMS		B:	G:
UNIT LOAD SIZE: 22.5" DIA X 34.5" HIGH	DUTY: 8 HRS/DAY	C:	H:
UNIT LOAD WEIGHT: 1,000 LBS	WORKING PRESSURE: .75-1.0" WATER	D:	I:
LOCATION: INDOOR	LEAK RATE: 0.3 VOL %/HR IN 12 HRS	E:	J:
RATED CAPACITY: 1 TON	NEC AREA CLASS: UNCLASSIFIED		
CONSTRUCTION			
CONSTRUCTION MATERIAL: 7 GA, 304 SS	FLATNESS OVERALL: 1/16"/FT		
TYPE OF CONTROL: PLC	FLATNESS SEALING SURFACES: 1/32"/FT		
SURFACE FINISH: 2B	GASKETS: NEOPRENE 30-60 DUROMETER		
WELD FINISH: FLUSH 2B	VIEWING WINDOWS: 1/4" SAFETY W/CHANNEL GASKET		
AVAILABLE POWER (VOLTS/PHASE/HZ): 460/3/60	SHIELDING WINDOWS: NONE		
STIFFENERS: 2X4 7 GA SKIP WELDED	TOLERANCES: 0-36" +/- 1/16"		
SHIELDING: NONE	TOLERANCES: 36-60" +/- 1/8"		
:	TOLERANCES: BEYOND 60" +/- 3/16"		

9413227.0211

UNITED ENGINEERS & CONSTRUCTORS A Raytheon Company Western Operations	EQUIPMENT DATA SHEET ☒ CDR ☐ TITLE I ☐ TITLE II ☐ TITLE III	ITEM NUMBER GB-06-522	PAGE 1 OF 1

CUSTOMER & LOCATION	PROJECT	UE&C JOB NO. 6237.006	DATE: 06/13/92
DOE-RL/WHC HANFORD, WA	WRAP FACILITY MODULE 2A	ACCOUNT NO.	BY: SAS

REVISIONS (DATE & BY)	A		B		C		D	
	E		F		G		H	

SERVICE	MANUFACTURER	NO. REQ'D.	SOURCE OF QUOTE
TRANSFER TUNNEL ENCLOSURE (EMPTY DRUMS)		1	

PROCESS GLOVEBOX

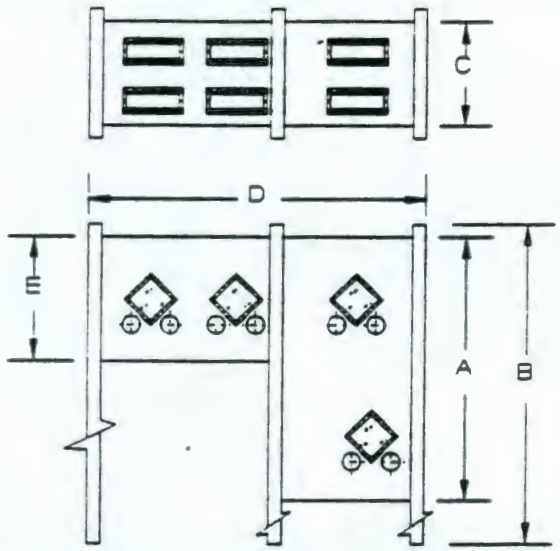

CONDITIONS OF SERVICE		DIMENSIONS	
APPLICATION: CONTAIN TRANSFER OF EMPTY DRUMS TO SHREDDER & REPACK ENCLOSURE		A: 9'-1"	F: 3'-4"
UNIT LOAD DESCRIPTION: EMPTY 55 AND 85 GAL DRUMS		B: 12'-7"	G: 3'-9"
UNIT LOAD SIZE: 26" DIA X 39" HIGH @ ENTRY	DUTY: 8 HRS/DAY	C: 3'-4"	H:
UNIT LOAD WEIGHT: 1,000 LBS	WORKING PRESSURE: .75-1.0" WATER	D: 5'-7"	I:
LOCATION: SIZE REDUCTION AND REPACK CELL	LEAK RATE: 0.3 VOL %/HR IN 12 HRS	E: 6'-8"	J:
RATED CAPACITY: 1 TON	NEC AREA CLASS: UNCLASSIFIED		

CONSTRUCTION			
CONSTRUCTION MATERIAL: 7 GA. 304 SS	FLATNESS OVERALL: 1/16"/FT		
TYPE OF CONTROL: PLC	FLATNESS SEALING SURFACES: 1/32"/FT		
SURFACE FINISH: 2B	GASKETS: NEOPRENE 30-60 DUROMETER		
WELD FINISH: FLUSH 2B	VIEWING WINDOWS: 1/4" SAFETY W/CHANNEL GASKET		
AVAILABLE POWER (VOLTS/PHASE/HZ): 460/3/60	SHIELDING WINDOWS: NONE		
STIFFENERS: 2X4 7 GA SKIP WELDED	TOLERANCES: 0-36" +/- 1/16"		
SHIELDING: NONE	TOLERANCES: 36-60" +/- 1/8"		
:	TOLERANCES: BEYOND 60" +/- 3/16"		

UNITED ENGINEERS & CONSTRUCTORS A Raytheon Company Western Operations	EQUIPMENT DATA SHEET	ITEM NUMBER	PAGE
	☒ CDR ☐ TITLE I ☐ TITLE II ☐ TITLE III	GB-05-541	1 OF 4

CUSTOMER & LOCATION	PROJECT	UE&C JOB NO.	DATE:
DOE-RL/WHC HANFORD, WA	WRAP FACILITY MODULE 2A	6237.006	05/13/92
		ACCOUNT NO.	BY: SAS

REVISIONS (DATE & BY)	A		B		C		D	
	E		F		G		H	

SERVICE	MANUFACTURER	NO. REQ'D.	SOURCE OF QUOTE
PUG MILL ENCLOSURE (ENTRY)		1	

PROCESS GLOVEBOX

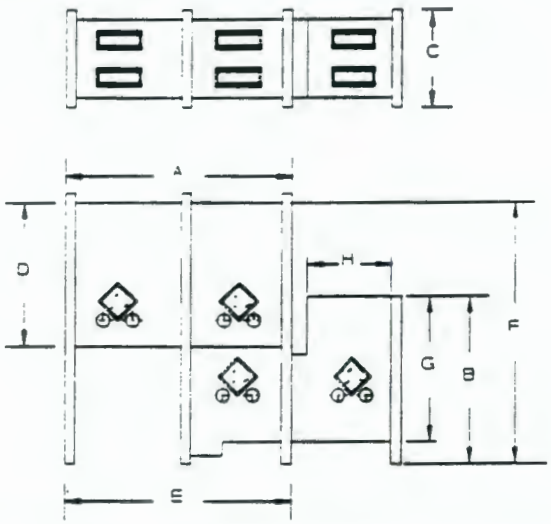

CONDITIONS OF SERVICE		DIMENSIONS	
APPLICATION: WASTE DRUMS ENTRY INTO CONTAINMNT FOR PROCESSING		A:	F:
UNIT LOAD DESCRIPTION: 55 AND 85 GAL DRUMS CONTAINING LLRMW		B:	G:
UNIT LOAD SIZE: 26" DIA X 39" HIGH	DUTY: 8 HRS/DAY	C:	H:
UNIT LOAD WEIGHT: 3,000 LBS	WORKING PRESSURE: .75-1.0" WATER	D:	I:
LOCATION: SIZE REDUCTION & REPACK CELL	LEAK RATE: 0-3 VOL %/HR IN 12 HRS	E:	J:
RATED CAPACITY: 2 TONS	NEC AREA CLASS: UNCLASSIFIED		

CONSTRUCTION			
CONSTRUCTION MATERIAL: 7 GA, 304 SS	FLATNESS OVERALL: 1/16"/FT		
TYPE OF CONTROL: PLC	FLATNESS SEALING SURFACES: 1/32"/FT		
SURFACE FINISH: 2B	GASKETS: 30-60 DUROMETER		
WELD FINISH: FLUSH 2B	VIEWING WINDOWS: 1/4" SAFETY W/CHANNEL GASKET		
AVAILABLE POWER (VOLTS/PHASE/HZ): 460/3/60	SHIELDING WINDOWS: 1/4" LEAD W/SS CHANNEL EDGE		
STIFFENERS: 2X4 7 GA SKIP WELDED	TOLERANCES: 0-36" +/- 1/16"		
SHIELDING: BONDED .5" LEAD W/BONDED	TOLERANCES: 36-60" +/- 1/8"		
: 16 GA OUTER SKIN	TOLERANCES: BEYOND 60" +/- 3/16"		

9413227.0213

UNITED ENGINEERS & CONSTRUCTORS A Raytheon Company Western Operations	EQUIPMENT DATA SHEET ☒ CDR ☐ TITLE I ☐ TITLE II ☐ TITLE III	ITEM NUMBER GB-05-541	PAGE 2 OF 4

CUSTOMER & LOCATION	PROJECT	UE&C JOB NO. 6237.006	DATE: 05/13/92
DOE-RL/WHC HANFORD, WA	WRAP FACILITY MODULE 2A	ACCOUNT NO.	BY: SAS

REVISIONS (DATE & BY)	A		B		C		D	
	E		F		G		H	

SERVICE	MANUFACTURER	NO. REQ'D.	SOURCE OF QUOTE
PUG MILL ENCLOSURE (SORT)		1	

PROCESS GLOVEBOX

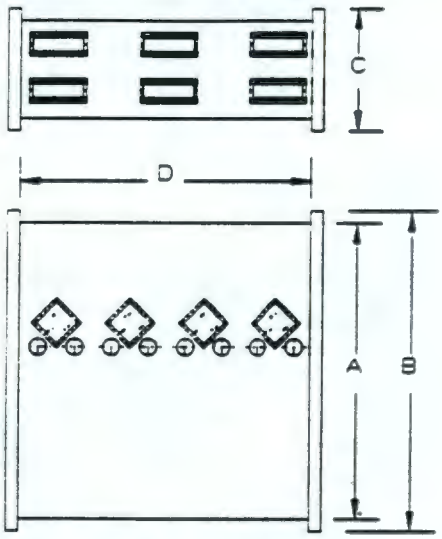

CONDITIONS OF SERVICE		DIMENSIONS	
APPLICATION: WASTE DRUMS EMPTIED, INSPECTED AND SORTED PRIOR TO PROCESSING IN PUG MILL		A:	F:
UNIT LOAD DESCRIPTION: LLRMW WASTE FROM 55 & 85 GAL DRUMS		B:	G:
UNIT LOAD SIZE: 26" DIA X 39" HIGH	DUTY: 8 HRS/DAY	C:	H:
UNIT LOAD WEIGHT: 3,000 LBS	WORKING PRESSURE: .75-1.0" WATER	D:	I:
LOCATION: SIZE REDUCTION & REPACK CELL	LEAK RATE: 0-3 VOL %/HR IN 12 HRS	E:	J:
RATED CAPACITY: 2 TONS	NEC AREA CLASS: UNCLASSIFIED		

CONSTRUCTION			
CONSTRUCTION MATERIAL: 7 GA, 304 SS	FLATNESS OVERALL: 1/16"/FT		
TYPE OF CONTROL: PLC	FLATNESS SEALING SURFACES: 1/32"/FT		
SURFACE FINISH: 2B	GASKETS: NEOPRENE 30-60 DUROMETER		
WELD FINISH: FLUSH 2B	VIEWING WINDOWS: 1/4" SAFETY W/CHANNEL GASKET		
AVAILABLE POWER (VOLTS/PHASE/HZ): 460/3/60	SHIELDING WINDOWS: 1/4" LEAD W/SS CHANNEL EDGE		
STIFFENERS: 2X4 7 GA SKIP WELDED	TOLERANCES: 0-36" +/- 1/16"		
SHIELDING: BONDED .5" LEAD W/BONDED	TOLERANCES: 36-60" +/- 1/8"		
: 16 GA OUTER SKIN	TOLERANCES: BEYOND 60" +/- 3/16"		

UNITED ENGINEERS & CONSTRUCTORS A Raytheon Company Western Operations	EQUIPMENT DATA SHEET ☒ CDR ☐ TITLE I ☐ TITLE II ☐ TITLE III	ITEM NUMBER GB-05-541	PAGE 3 OF 4

CUSTOMER & LOCATION	PROJECT	UE&C JOB NO. 6237.006	DATE: 05/13/92
DOE-RL/WHC HANFORD, WA	WRAP FACILITY MODULE 2A	ACCOUNT NO.	BY: SAS

REVISIONS (DATE & BY)	A		B		C		D	
	E		F		G		H	

SERVICE	MANUFACTURER	NO. REQ'D.	SOURCE OF QUOTE
PUG MILL ENCLOSURE (PUG MILL)		1	

PROCESS GLOVEBOX

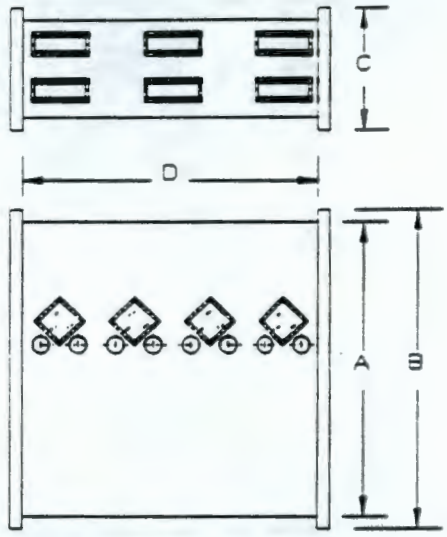

CONDITIONS OF SERVICE		DIMENSIONS	
APPLICATION: TO CONTROL PUG MILL		A:	F:
UNIT LOAD DESCRIPTION: LLRMW FROM 55 & 85 GAL DRUMS		B:	G:
UNIT LOAD SIZE: 26" DIA X 39" HIGH	DUTY: 8 HRS/DAY	C:	H:
UNIT LOAD WEIGHT: 3,000 LBS	WORKING PRESSURE: .75-1.0" WATER	D:	I:
LOCATION: SIZE REDUCTION & REPACK CELL	LEAK RATE: 0.3 VOL %/HR IN 12 HRS	E:	J:
RATED CAPACITY: 2 TONS	NEC AREA CLASS: UNCLASSIFIED		
CONSTRUCTION			
CONSTRUCTION MATERIAL: 7 GA, 304 SS	FLATNESS OVERALL: 1/16"/FT		
TYPE OF CONTROL: PLC	FLATNESS SEALING SURFACES: 1/32"/FT		
SURFACE FINISH: 2B	GASKETS: NEOPRENE 30-60 DUROMETER		
WELD FINISH: FLUSH 2B	VIEWING WINDOWS: 1/4" SAFETY W/CHANNEL GASKET		
AVAILABLE POWER (VOLTS/PHASE/HZ): 460/3/60	SHIELDING WINDOWS: 1/4" LEAD W/SS CHANNEL EDGE		
STIFFENERS: 2X4 7 GA SKIP WELDED	TOLERANCES: 0-36" +/- 1/16"		
SHIELDING: BONDED .5" LEAD W/BONDED	TOLERANCES: 36-60" +/- 1/8"		
: 16 GA OUTER SKIN	TOLERANCES: BEYOND 60" +/- 3/16"		

9413227.0215

UNITED ENGINEERS & CONSTRUCTORS A Raytheon Company Western Operations	EQUIPMENT DATA SHEET ☒ CDR ☐ TITLE I ☐ TITLE II ☐ TITLE III	ITEM NUMBER GB-05-541	PAGE 4 OF 4

CUSTOMER & LOCATION	PROJECT	UE&C JOB NO. 6237.006	DATE: 05/13/92
DOE-RL/WHC HANFORD, WA	WRAP FACILITY MODULE 2A	ACCOUNT NO.	BY: SAS

REVISIONS (DATE & BY)	A		B		C		D	
	E		F		G		H	

SERVICE	MANUFACTURER	NO. REQ'D.	SOURCE OF QUOTE
PUG MILL ENCLOSURE (EXIT)		1	

PROCESS GLOVEBOX

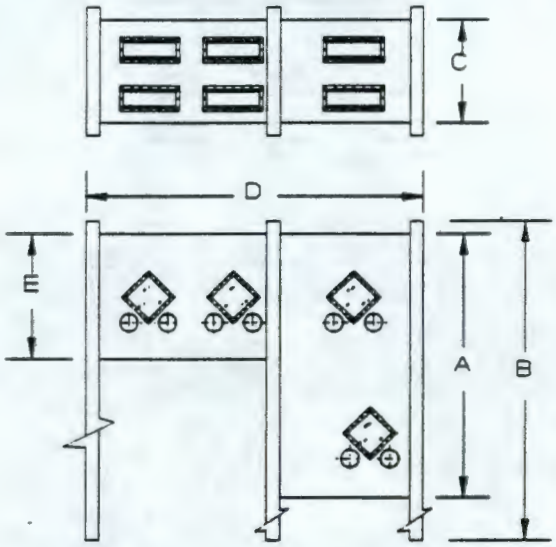

CONDITIONS OF SERVICE		DIMENSIONS	
APPLICATION: CONTAINING OPERATION FOR LOADING WASTE INTO NEW DRUMS		A:	F:
UNIT LOAD DESCRIPTION: 55 GAL DRUMS OF REPACKED LLRMW		B:	G:
UNIT LOAD SIZE: 22.5" DIA X 34.5" HIGH @ ENTRY	DUTY: 8 HRS/DAY	C:	H:
UNIT LOAD WEIGHT: 1,000 LBS	WORKING PRESSURE: .75-1.0" WATER	D:	I:
LOCATION: SIZE REDUCTION AND REPACK CELL	LEAK RATE: 0.3 VOL %/HR IN 12 HRS	E:	J:
RATED CAPACITY: 1 TON	NEC AREA CLASS: UNCLASSIFIED		

CONSTRUCTION			
CONSTRUCTION MATERIAL: 7 GA. 304 SS	FLATNESS OVERALL: 1/16"/FT		
TYPE OF CONTROL: PLC	FLATNESS SEALING SURFACES: 1/32"/FT		
SURFACE FINISH: 2B	GASKETS: NEOPRENE 30-60 DUROMETER		
WELD FINISH: FLUSH 2B	VIEWING WINDOWS: 1/4" SAFETY W/CHANNEL GASKET		
AVAILABLE POWER (VOLTS/PHASE/HZ): 460/3/60	SHIELDING WINDOWS: NONE		
STIFFENERS: 2X4 7 GA SKIP WELDED	TOLERANCES: 0-36" +/- 1/16"		
SHIELDING: NONE	TOLERANCES: 36-60" +/- 1/8"		
:	TOLERANCES: BEYOND 60" +/- 3/16"		

UNITED ENGINEERS & CONSTRUCTORS A Raytheon Company Western Operations	EQUIPMENT DATA SHEET ☒ CDR ☐ TITLE I ☐ TITLE II ☐ TITLE III	ITEM NUMBER GB-05-401	PAGE 1 OF 1

CUSTOMER & LOCATION	PROJECT	UE&C JOB NO. 6237.006	DATE: 05/13/92
DOE-RL/WHC HANFORD, WA	WRAP FACILITY MODULE 2A	ACCOUNT NO.	BY: AJZ

REVISIONS (DATE & BY)	A		B		C		D	
	E		F		G		H	

SERVICE	MANUFACTURER	NO. REQ'D.	SOURCE OF QUOTE
POLYMER ENCLOSURE		1	

POLYMER PROCESS GLOVEBOX

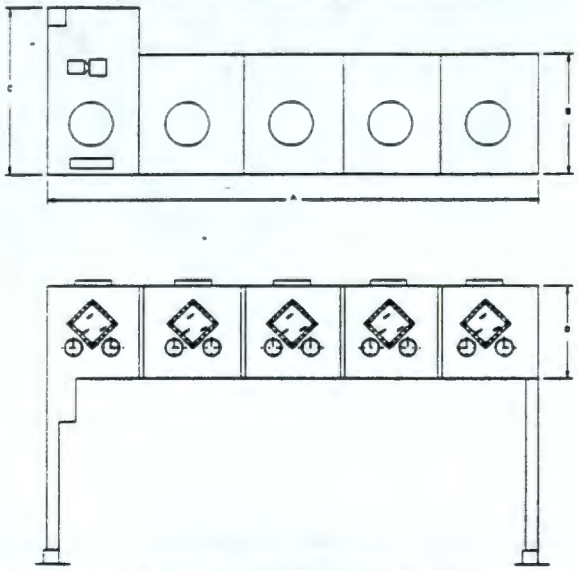

CONDITIONS OF SERVICE		DIMENSIONS	
APPLICATION: WASTE DRUMS OPENED TO ALLOW POLYMER INJECTION		A: 21'	F:
UNIT LOAD DESCRIPTION: 55 GALLON WASTE DRUMS		B: 4'	G:
UNIT LOAD SIZE: 22.5" DIA X 34" HIGH @ ENTRY POINTS	DUTY: 8 HRS/DAY	C: 6'	H:
UNIT LOAD WEIGHT: 1,000 LBS	WORKING PRESSURE: .75-1.0" WATER	D: 4'	I:
LOCATION: INDOOR	LEAK RATE: 0.3 VOL %/HR IN 12 HRS	E:	J:
RATED CAPACITY: 1 TON	NEC AREA CLASS: UNCLASSIFIED		
CONSTRUCTION			
CONSTRUCTION MATERIAL: 7 GA, 304 SS	FLATNESS OVERALL: 1/16"/FT		
TYPE OF CONTROL: PLC	FLATNESS SEALING SURFACES: 1/32"/FT		
SURFACE FINISH: 2B	GASKETS: 30-60 DUROMETER		
WELD FINISH: 2B	VIEWING WINDOWS: 1/4" SAFETY W/CHANNEL GASKET		
AVAILABLE POWER (VOLTS/PHASE/HZ): 460/3/60	SHIELDING WINDOWS: 1/4" LEAD W/SS CHANNEL EDGE		
STIFFENERS: 2X4 7 GA SKIP WELDED	TOLERANCES: 0-36" +/- 1/16"		
SHIELDING: BONDED 1/2" LEAD W/BONDED	TOLERANCES: 36-60" +/- 1/8"		
: 16 GA OUTER SKIN	TOLERANCES: BEYOND 60" +/- 3/16"		

9413227.0217

UNITED ENGINEERS & CONSTRUCTORS A Raytheon Company Western Operations	EQUIPMENT DATA SHEET ☒ CDR ☐ TITLE I ☐ TITLE II ☐ TITLE III	ITEM NUMBER GB-05-201	PAGE 1 OF 1
CUSTOMER & LOCATION DOE-RL/WHC HANFORD, WA	PROJECT WRAP FACILITY MODULE 2A	UE&C JOB NO. 6237.006	DATE: 06/02/92
		ACCOUNT NO.	BY: JPJ

REVISIONS (DATE & BY)								
	A		B		C		D	
	E		F		G		H	

SERVICE	MANUFACTURER	NO. REQ'D.	SOURCE OF QUOTE
GROUT ENCLOSURE		1	

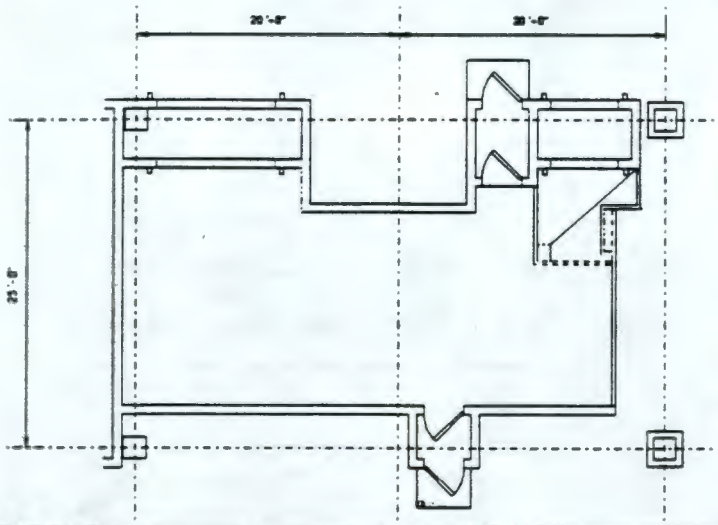

CONDITIONS OF SERVICE		DIMENSIONS	
APPLICATION: WASTE DRUMS CONTAINMENT FOR GROUT STABLIZATION		A:	
UNIT LOAD DESCRIPTION:		B:	
UNIT LOAD SIZE:	DUTY: 8 HRS/DAY	C:	
UNIT LOAD WEIGHT:	WORKING PRESSURE: .75-1.0" WATER		
LOCATION: INDOOR	LEAK RATE: 0.3 VOL PERCENT/HR IN 12 HRS		
	NEC AREA CLASS: UNCLASSIFIED		
CONSTRUCTION			
CONSTRUCTION MATERIALS: 7 GA 304 SS	FLATNESS OVERALL: 1/16"/FT		
TYPE OF CONTROL: PLC	FLATNESS SEALING SURFACES: 1/32"/FT		
SURFACE FINISH: 2B	GASKETS: NEOPRENE 30-60 DUROMETER		
WELD FINISH: FLUSH 2B	VIEWING WINDOWS: 1/4" SAFETY W/CHANNEL GASKET		
AVAILABLE POWER (VOLTS/PH/HZ): 460/3/60	SHIELDING WINDOWS: NONE		
STIFFENERS: 2 X 4 7 GA SKIP WELDED	TOLERANCES: 0-36" +/- 1/16"		
SHIELDING: BONDED .25" LEAD W/BOND 16 GA OUTER SKIN	TOLERANCES: 36-60" +/- 1/8"		
	TOLERANCES; BEYOND 60" +/- 3/16"		

UNITED ENGINEERS & CONSTRUCTORS A Raytheon Company Western Operations	EQUIPMENT DATA SHEET ☒ CDR ☐ TITLE I ☐ TITLE II ☐ TITLE III	ITEM NUMBER GB-05-600	PAGE 1 OF 1

CUSTOMER & LOCATION	PROJECT	UE&C JOB NO. 6237.006	DATE: 06/02/92
DOE-RL/WHC HANFORD, WA	WRAP FACILITY MODULE 2A	ACCOUNT NO.	BY: VAW

REVISIONS (DATE & BY)	A		B		C		D	
	E		F		G		H	

SERVICE	MANUFACTURER	NO. REQ'D.	SOURCE OF QUOTE
DRUM SAMPLING		1	

DRUM SAMPLING GLOVEBOX

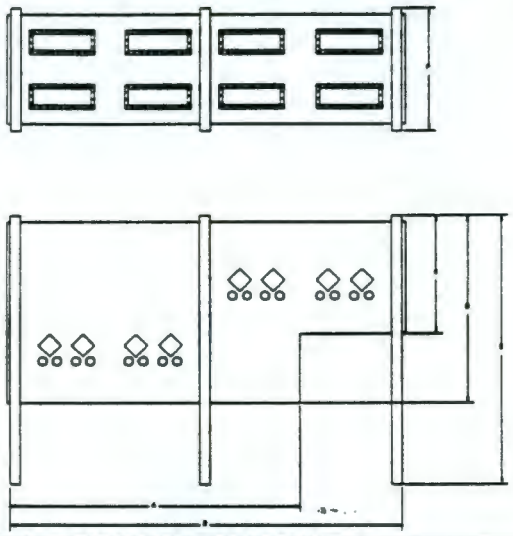

CONDITIONS OF SERVICE		DIMENSIONS	
APPLICATION: CONTAINMENT ENCLOSURE FOR LOT VERIFICATION SAMPLING		A: 17'	D: 12'
UNIT LOAD DESCRIPTION: 55 & 85 GAL DRUMS CONTAINING LLRMW		B: 22'	E: 18'
UNIT LOAD SIZE: 26" DIA X 39" HIGH	DUTY: 8 HRS/DAY	C: 10'-6"	F: 4'-6"
UNIT LOAD WEIGHT: 3,000 LBS	WORKING PRESSURE: .75-1.0" WATER		
LOCATION: SAMPLE MANAGEMENT CELL	LEAK RATE: 0.3 VOL PERCENT/HR IN 12 HRS		
RATED CAPACITY: 2 TONS	NEC AREA CLASS: UNCLASSIFIED		
CONSTRUCTION			
CONSTRUCTION MATERIALS: 7 GA 304 SS	FLATNESS OVERALL: 1/16"/FT		
TYPE OF CONTROL: PLC	FLATNESS SEALING SURFACES: 1/32"/FT		
SURFACE FINISH: 2B	GASKETS: NEOPRENE 30-60 DUROMETER		
WELD FINISH: FLUSH 2B	VIEWING WINDOWS: 1/4" SAFETY W/CHANNEL GASKET		
AVAILABLE POWER (VOLTS/PH/HZ): 460/3/60	SHIELDING WINDOWS: NONE		
STIFFENERS: 2 X 4 7 GA SKIP WELDED	TOLERANCES: 0-36" +/- 1/16"		
SHIELDING: NONE	TOLERANCES: 36-60" +/- 1/8"		
	TOLERANCES: BEYOND 60" +/- 3/16"		

9413227.0219

UNITED ENGINEERS & CONSTRUCTORS A Raytheon Company Western Operations	EQUIPMENT DATA SHEET ☒ CDR ☐ TITLE I ☐ TITLE II ☐ TITLE III	ITEM NUMBER GB-05-601A,B,C,D	PAGE 1 OF 1

CUSTOMER & LOCATION	PROJECT	UE&C JOB NO. 6237.006	DATE: 06/02/92
DOE-RL/WHC HANFORD, WA	WRAP FACILITY MODULE 2A	ACCOUNT NO.	BY: GBD

REVISIONS (DATE & BY)	A		B		C		D	
	E		F		G		H	

SERVICE	MANUFACTURER	NO. REQ'D.	SOURCE OF QUOTE
SAMPLE ANALYSIS		1	

FUME HOOD

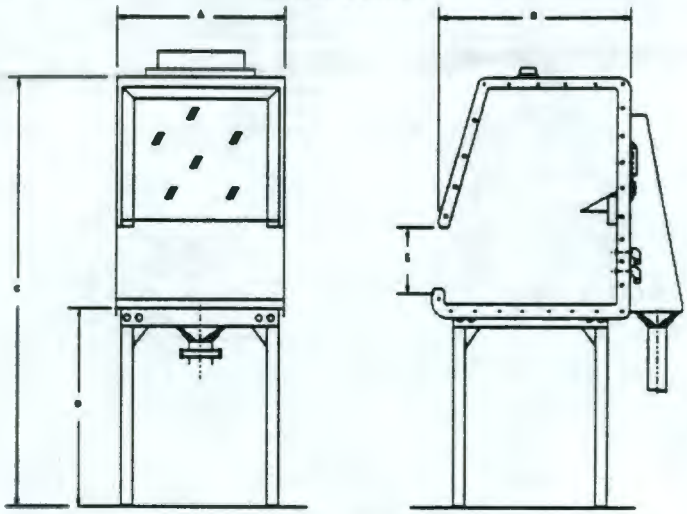

CONDITIONS OF SERVICE		DIMENSIONS	
APPLICATION: FUME HOOD ENCLOSURES FOR ACTIVE AND INACTIVE SAMPLE ANALYSIS		A: 32"	
UNIT LOAD DESCRIPTION: SOLID AND LIQUID SAMPLES FOR ANALYSIS		B: 31"	
UNIT LOAD SIZE:	DUTY: 8 HRS/DAY	C: 70"	
UNIT LOAD WEIGHT: 15 LBS	WORKING PRESSURE: 0.2" - 0.7" WG	D: 38"	
LOCATION: SAMPLE ROOM	SHIPPING WEIGHT: 509 LBS		
CONSTRUCTION			
CONSTRUCTION MATERIALS: SS/CS	LIGHTS: 2 X 100 WATT VAPOR PROOF INCANDESCENT LIGHTS		
FRONT VIEWING PANEL: 3/16" SAFETY GLASS (VERTICAL RISING)	VENTILATION CONNECTION: 11" O/DIA		
ENCLOSURE SERVICES: VALVED PIPED INLETS			

0220 7225/116

UNITED ENGINEERS & CONSTRUCTORS A Raytheon Company Western Operations	EQUIPMENT DATA SHEET ☒ CDR ☐ TITLE I ☐ TITLE II ☐ TITLE III	ITEM NUMBER GB-06-101	PAGE 1 OF 4

CUSTOMER & LOCATION	PROJECT	UE&C JOB NO. 6237.006	DATE: 05/13/92
DOE-RL/WHC HANFORD, WA	WRAP FACILITY MODULE 2A	ACCOUNT NO.	BY: GBD

REVISIONS (DATE & BY)	A		B		C		D	
	E		F		G		H	

SERVICE	MANUFACTURER	NO. REQ'D.	SOURCE OF QUOTE
	SPECIAL WASTE ENCLOSURE	1	

PROCESS GLOVEBOX

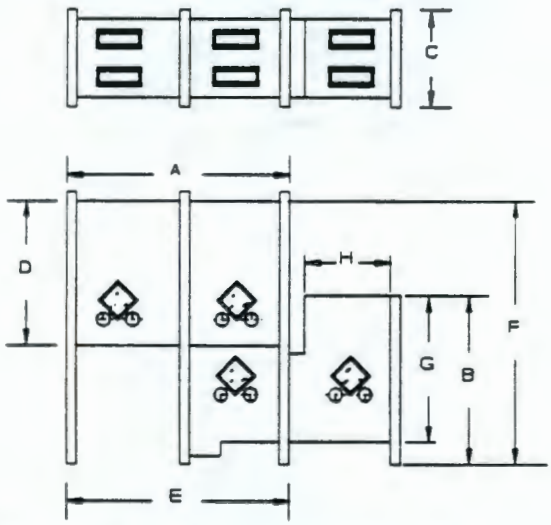

CONDITIONS OF SERVICE		DIMENSIONS	
APPLICATION: ENCLOSURE PROVIDING CONTAINMENT FOR DRUM ENTRY		A:	F:
UNIT LOAD DESCRIPTION: 55 AND 85 GAL WASTE DRUMS		B:	G:
UNIT LOAD SIZE: 26" DIA X 39" HIGH	DUTY: 8 HRS/DAY	C:	H:
UNIT LOAD WEIGHT: 3,000 LBS	WORKING PRESSURE: .75-1.0" WATER	D:	I:
LOCATION: SPECIAL WASTE - MERCURY/LEAD	LEAK RATE: 0-3 VOL %/HR IN 12 HRS	E:	J:
RATED CAPACITY: 1 TON	NEC AREA CLASS: UNCLASSIFIED		
CONSTRUCTION			
CONSTRUCTION MATERIAL: 7 GA, 304 SS	FLATNESS OVERALL: 1/16"/FT		
TYPE OF CONTROL: PLC	FLATNESS SEALING SURFACES: 1/32"/FT		
SURFACE FINISH: 2B	GASKETS: NEOPRENE 30-60 DUROMETER		
WELD FINISH: FLUSH 2B	VIEWING WINDOWS: 1/4" SAFETY W/CHANNEL		
AVAILABLE POWER (VOLTS/PHASE/HZ): 460/3/60	SHIELDING WINDOWS: 1/4" LEADED W/S.S. CHANNEL		
STIFFENERS: 2X4 7 GA SKIP WELDED	TOLERANCES: 0-36" +/- 1/16"		
SHIELDING: BONDED 1/4" LEAD W/BONDED	TOLERANCES: 36-60" +/- 1/8"		
: 16 GA OUTER SKIN	TOLERANCES: BEYOND 60" +/- 3/16"		

9413227.0221

UNITED ENGINEERS & CONSTRUCTORS A Raytheon Company Western Operations	EQUIPMENT DATA SHEET ☒ CDR ☐ TITLE I ☐ TITLE II ☐ TITLE III	ITEM NUMBER GB-06-101	PAGE 2 OF 4

CUSTOMER & LOCATION	PROJECT	UE&C JOB NO. 6237.006	DATE: 05/13/92
DOE-RL/WHC HANFORD, WA	WRAP FACILITY MODULE 2A	ACCOUNT NO.	BY: GBD

REVISIONS (DATE & BY)	A		B		C		D	
	E		F		G		H	

SERVICE	MANUFACTURER	NO. REQ'D.	SOURCE OF QUOTE
SPECIAL WASTE ENCLOSURE		1	

PROCESS GLOVEBOX

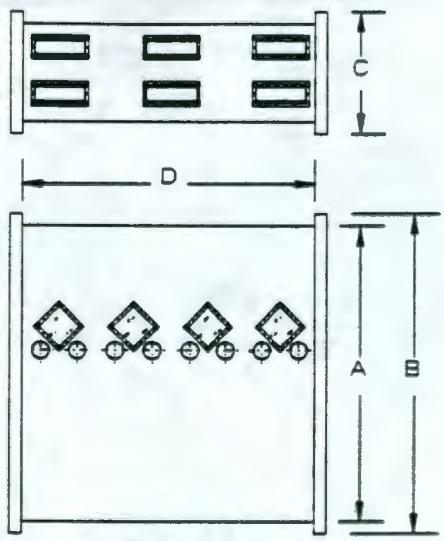

CONDITIONS OF SERVICE		DIMENSIONS	
APPLICATION: ENCLOSURE FOR TRANSFER OF DRUM TO SORT/SHRED AREA		A:	F:
UNIT LOAD DESCRIPTION: 55 AND 85 GAL WASTE DRUMS		B:	G:
UNIT LOAD SIZE: 26" DIA X 39" HIGH	DUTY: 8 HRS/DAY	C:	H:
UNIT LOAD WEIGHT: 3,000 LBS	WORKING PRESSURE: .75-1.0" WATER	D:	I:
LOCATION: SPECIAL WASTE - MERCURY/LEAD	LEAK RATE: 0-3 VOL %/HR IN 12 HRS	E:	J:
RATED CAPACITY: 1 TON	NEC AREA CLASS: UNCLASSIFIED		
CONSTRUCTION			
CONSTRUCTION MATERIAL: 7 GA, 304 SS	FLATNESS OVERALL: 1/16"/FT		
TYPE OF CONTROL: PLC	FLATNESS SEALING SURFACES: 1/32"/FT		
SURFACE FINISH: 2B	GASKETS: NEOPRENE 30-60 DUROMETER		
WELD FINISH: FLUSH 2B	VIEWING WINDOWS: 1/4" SAFETY W/CHANNEL		
AVAILABLE POWER (VOLTS/PHASE/HZ): 460/3/60	SHIELDING WINDOWS: 1/4" LEAD W/SS CHANNEL		
STIFFENERS: 2X4 7 GA SKIP WELDED	TOLERANCES: 0-36" +/- 1/16"		
SHIELDING: BONDED 1/4" LEAD W/BONDED	TOLERANCES: 36-60" +/- 1/8"		
: 16 GA OUTER SKIN	TOLERANCES: BEYOND 60" +/- 3/16"		

UNITED ENGINEERS & CONSTRUCTORS A Raytheon Company Western Operations	EQUIPMENT DATA SHEET ☒ CDR ☐ TITLE I ☐ TITLE II ☐ TITLE III	ITEM NUMBER GB-06-101	PAGE 3 OF 4

CUSTOMER & LOCATION	PROJECT	UE&C JOB NO. 6237.006	DATE: 05/13/92
DOE-RL/WHC HANFORD, WA	WRAP FACILITY MODULE 2A	ACCOUNT NO.	BY: GBD

REVISIONS (DATE & BY)	A		B		C		D	
	E		F		G		H	

SERVICE	MANUFACTURER	NO. REQ'D.	SOURCE OF QUOTE
SPECIAL WASTE ENCLOSURE		1	

PROCESS GLOVEBOX

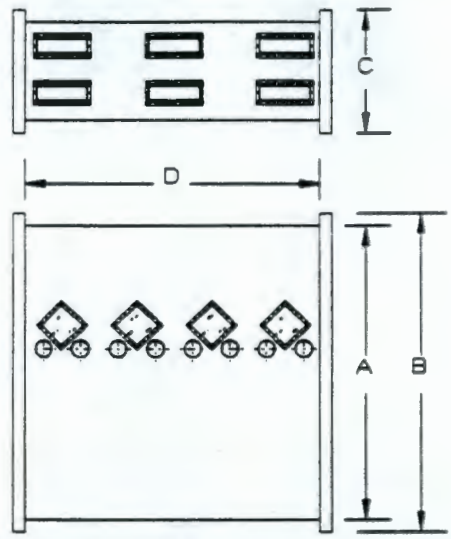

CONDITIONS OF SERVICE		DIMENSIONS	
APPLICATION: ENCLOSURE FOR SORTING WASTE		A:	F:
UNIT LOAD DESCRIPTION: 55 AND 85 GAL WASTE DRUMS		B:	G:
UNIT LOAD SIZE: 26" DIA X 39" HIGH	DUTY: 8 HRS/DAY	C:	H:
UNIT LOAD WEIGHT: 3,000 LBS	WORKING PRESSURE: .75-1.0" WATER	D:	I:
LOCATION: SPECIAL WASTE - MERCURY/LEAD	LEAK RATE: 0.3 VOL %/HR IN 12 HRS	E:	J:
RATED CAPACITY: 1 TON	NEC AREA CLASS: UNCLASSIFIED		
CONSTRUCTION			
CONSTRUCTION MATERIAL: 7 GA, 304 SS	FLATNESS OVERALL: 1/16"/FT		
TYPE OF CONTROL: PLC	FLATNESS SEALING SURFACES: 1/32"/FT		
SURFACE FINISH: 2B	GASKETS: NEOPRENE 30-60 DUROMETER		
WELD FINISH: FLUSH 2B	VIEWING WINDOWS: 1/4" SAFETY W/CHANNEL		
AVAILABLE POWER (VOLTS/PHASE/HZ): 460/3/60	SHIELDING WINDOWS: 1/4 LEADED W/S.S. CHANNEL		
STIFFENERS: 2X4 7 GA SKIP-WELDED	TOLERANCES: 0-36" +/- 1/16"		
SHIELDING: BONDED 1/4" LEAD W/BONDED	TOLERANCES: 36-60" +/- 1/8"		
: 16 GA OUTER SKIN	TOLERANCES: BEYOND 60" +/- 3/16"		

9413227.0223

UNITED ENGINEERS & CONSTRUCTORS A Raytheon Company Western Operations	EQUIPMENT DATA SHEET ☒ CDR ☐ TITLE I ☐ TITLE II ☐ TITLE III	ITEM NUMBER GB-06-101	PAGE 4 OF 4

CUSTOMER & LOCATION	PROJECT	UE&C JOB NO. 6237.006	DATE: 06/13/92
DOE-RL/WHC HANFORD, WA	WRAP FACILITY MODULE 2A	ACCOUNT NO.	BY: GBD

REVISIONS (DATE & BY)	A		B		C		D	
	E		F		G		H	

SERVICE	MANUFACTURER	NO. REQ'D.	SOURCE OF QUOTE
SPECIAL WASTE ENCLOSURE		1	

PROCESS GLOVEBOX

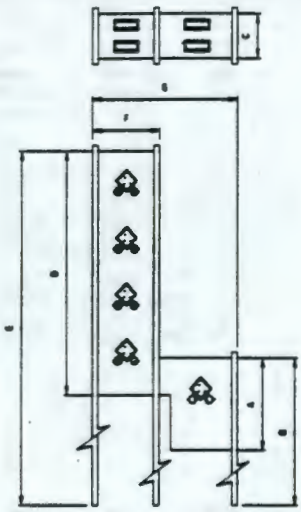

CONDITIONS OF SERVICE		DIMENSIONS	
APPLICATION: ENCLOSURE FOR SHREDDING WASTE		A:	F:
UNIT LOAD DESCRIPTION: SORTED METAL WASTE		B:	G:
UNIT LOAD SIZE:	DUTY: 8 HRS/DAY	C:	H:
UNIT LOAD WEIGHT: 700 LBS	WORKING PRESSURE: .75-1.0" WATER	D:	I:
LOCATION: SPECIAL WASTE - MERCURY/LEAD	LEAK RATE: 0-3 VOL %/HR IN 12 HRS	E:	J:
RATED CAPACITY: 1 TON	NEC AREA CLASS: UNCLASSIFIED		
CONSTRUCTION			
CONSTRUCTION MATERIAL: 7 GA. 304 SS	FLATNESS OVERALL: 1/16"/FT		
TYPE OF CONTROL: PLC	FLATNESS SEALING SURFACES: 1/32"/FT		
SURFACE FINISH: 2B	GASKETS: NEOPRENE 30-60 DUROMETER		
WELD FINISH: FLUSH 2B	VIEWING WINDOWS: 1/4" SAFETY W/CHANNEL		
AVAILABLE POWER (VOLTS/PHASE/HZ): 460/3/60	SHIELDING WINDOWS: 1/4" LEAD W/SS CHANNEL		
STIFFENERS: 2X4 7 GA SKIP WELDED	TOLERANCES: 0-36" +/- 1/16"		
SHIELDING: BONDED 1/2" LEAD 2/BONDED	TOLERANCES: 36-60" +/- 1/8"		
: 16 GA OUTER SKIN	TOLERANCES: BEYOND 60" +/- 3/16"		

9413227.0224

UNITED ENGINEERS & CONSTRUCTORS A Raytheon Company Western Operations	EQUIPMENT DATA SHEET ☒ CDR ☐ TITLE I ☐ TITLE II ☐ TITLE III	ITEM NUMBER GB-06-201	PAGE 1 OF 1

CUSTOMER & LOCATION	PROJECT	UE&C JOB NO. 6237.006	DATE: 06/13/92
DOE-RL/WHC HANFORD, WA	WRAP FACILITY MODULE 2A	ACCOUNT NO.	BY: GBD

REVISIONS (DATE & BY)	A		B		C		D	
	E		F		G		H	

SERVICE	MANUFACTURER	NO. REQ'D.	SOURCE OF QUOTE
EVAPORATOR ENCLOSURE		1	

PROCESS GLOVEBOX

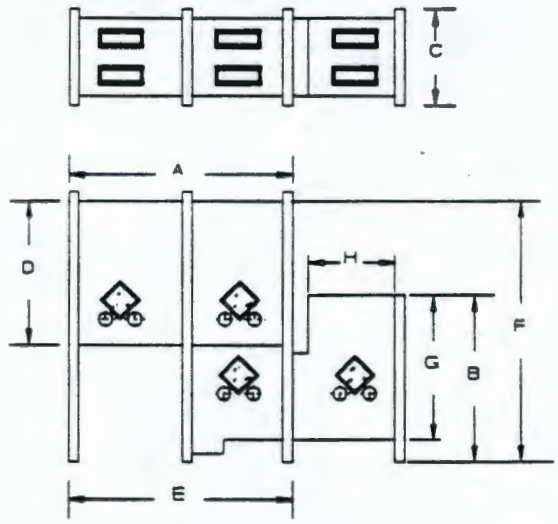

CONDITIONS OF SERVICE		DIMENSIONS	
APPLICATION: ENCLOSURE FOR EVAPORATION OF MERCURY WASTE		A:	F:
UNIT LOAD DESCRIPTION: SHREDDER BIN		B:	G:
UNIT LOAD SIZE:	DUTY: 8 HRS/DAY	C:	H:
UNIT LOAD WEIGHT: 600 LBS	WORKING PRESSURE: .75-1.0" WATER	D:	I:
LOCATION: SHREDDER ENCLOSURE	LEAK RATE: 0-3 VOL %/HR IN 12 HRS	E:	J:
RATED CAPACITY: 1 TON	NEC AREA CLASS: UNCLASSIFIED		
CONSTRUCTION			
CONSTRUCTION MATERIAL: 7 GA, 304 SS	FLATNESS OVERALL: 1/16"/FT		
TYPE OF CONTROL: PLC	FLATNESS SEALING SURFACES: 1/32"/FT		
SURFACE FINISH: 2B	GASKETS: NEOPRENE 30-60 DUROMETER		
WELD FINISH: FLUSH 2B	VIEWING WINDOWS: 1/4" SAFETY W/CHANNEL		
AVAILABLE POWER (VOLTS/PHASE/HZ): 460/3/60	SHIELDING WINDOWS: 1/4" LEAD W/S.S CHANNEL		
STIFFENERS: 2X4 7 GA SKIP WELDED	TOLERANCES: 0-36" +/- 1/16"		
SHIELDING: BONDED 1/4" LEAD W/BONDED	TOLERANCES: 36-60" +/- 1/8"		
: 16 GA OUTER SKIN	TOLERANCES: BEYOND 60" +/- 3/16"		

9413227.0225

UNITED ENGINEERS & CONSTRUCTORS A Raytheon Company Western Operations	EQUIPMENT DATA SHEET ☒ CDR ☐ TITLE I ☐ TITLE II ☐ TITLE III	ITEM NUMBER GB-06-202	PAGE 1 OF 1

CUSTOMER & LOCATION	PROJECT	UE&C JOB NO. 6237.006	DATE: 06/13/92
DOE-RL/WHC HANFORD, WA	WRAP FACILITY MODULE 2A	ACCOUNT NO.	BY: GBD

REVISIONS (DATE & BY)	A		B		C		D	
	E		F		G		H	

SERVICE	MANUFACTURER	NO. REQ'D.	SOURCE OF QUOTE
AMALGMATION ENCLOSURE		1	

PROCESS GLOVEBOX

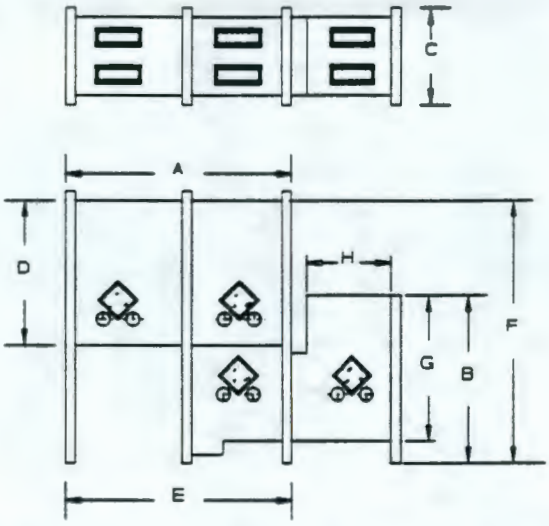

CONDITIONS OF SERVICE		DIMENSIONS	
APPLICATION: ENCLOSURE FOR AMALGMATION OF MERCURY WASTE		A:	F:
UNIT LOAD DESCRIPTION: MERCURY FLASKS		B:	G:
UNIT LOAD SIZE: 1 LITER	DUTY: 8 HRS/DAY	C:	H:
UNIT LOAD WEIGHT: 20 LBS	WORKING PRESSURE: .75-1.0" WATER	D:	I:
LOCATION: EVAPORATOR ENCLOSURE	LEAK RATE: 0-3 VOL %/HR IN 12 HRS	E:	J:
RATED CAPACITY: 1 TON	NEC AREA CLASS: UNCLASSIFIED		
CONSTRUCTION			
CONSTRUCTION MATERIAL: 7 GA, 304 SS	FLATNESS OVERALL: 1/16"/FT		
TYPE OF CONTROL: PLC	FLATNESS SEALING SURFACES: 1/32"/FT		
SURFACE FINISH: 2B	GASKETS: NEOPRENE 30-60 DUROMETER		
WELD FINISH: FLUSH 2B	VIEWING WINDOWS: 1/4" SAFETY W/CHANNEL		
AVAILABLE POWER (VOLTS/PHASE/HZ): 460/3/60	SHIELDING WINDOWS: 1/4" LEAD W/S.S CHANNEL		
STIFFENERS: 2X4 7 GA SKIP WELDED	TOLERANCES: 0-36" +/- 1/16"		
SHIELDING: BONDED 1/4" LEAD W/BONDED	TOLERANCES: 36-60" +/- 1/8"		
: 16 GA OUTER SKIN	TOLERANCES: BEYOND 60" +/- 3/16"		

9413227.0226

UNITED ENGINEERS & CONSTRUCTORS A Raytheon Company Western Operations	EQUIPMENT DATA SHEET ☒ CDR ☐ TITLE I ☐ TITLE II ☐ TITLE III	ITEM NUMBER GB-06-301	PAGE 1 OF 1

CUSTOMER & LOCATION	PROJECT	UE&C JOB NO. 6237.006	DATE: 06/18/92
DOE-RL/WHC HANFORD, WA	WRAP FACILITY MODULE 2A	ACCOUNT NO.	BY: GBD

REVISIONS (DATE & BY)	A		B		C		D	
	E		F		G		H	

SERVICE	MANUFACTURER	NO. REQ'D.	SOURCE OF QUOTE
REACTIVE METALS ENCLOSURE		1	

PROCESS GLOVEBOX

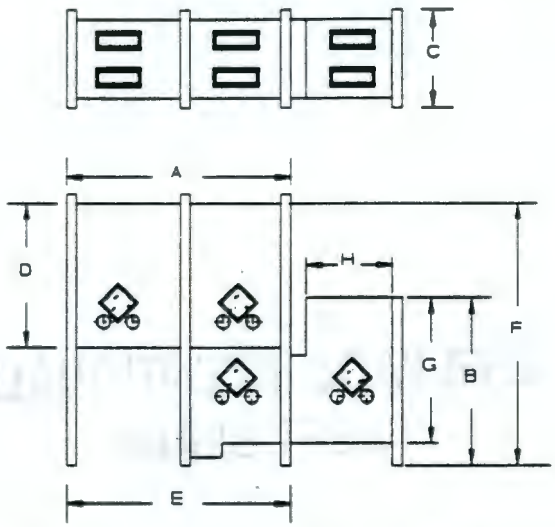

CONDITIONS OF SERVICE		DIMENSIONS	
APPLICATION: ENCLOSURE TO HUMIDIFY REACTIVE METALS		A:	F:
UNIT LOAD DESCRIPTION: 55 AND 85 GAL DRUMS		B:	G:
UNIT LOAD SIZE: 26" DIA X 39" HIGH	DUTY: 8 HRS/DAY	C:	H:
UNIT LOAD WEIGHT: 1,000 LBS	WORKING PRESSURE: .75-1.0" WATER	D:	I:
LOCATION: REACTIVE METALS ENCLOSURE	LEAK RATE: 0-3 VOL %/HR IN 12 HRS	E:	J:
RATED CAPACITY: 1 TON	NEC AREA CLASS: UNCLASSIFIED		
CONSTRUCTION			
CONSTRUCTION MATERIAL: 7 GA, 304 SS	FLATNESS OVERALL: 1/16"/FT		
TYPE OF CONTROL: PLC	FLATNESS SEALING SURFACES: 1/32"/FT		
SURFACE FINISH: 2B	GASKETS: NEOPRENE 30-60 DUROMETER		
WELD FINISH: FLUSH 2B	VIEWING WINDOWS: 1/4" SAFETY W/CHANNEL		
AVAILABLE POWER (VOLTS/PHASE/HZ): 460/3/60	SHIELDING WINDOWS: 1/4" LEAD W/S.S CHANNEL		
STIFFENERS: 2X4 7 GA SKIP WELDED	TOLERANCES: 0-36" +/- 1/16"		
SHIELDING: BONDED 1/4" LEAD W/BONDED	TOLERANCES: 36-60" +/- 1/8"		
: 16 GA OUTER SKIN	TOLERANCES: BEYOND 60" +/- 3/16"		

9413227.0227

THIS PAGE INTENTIONALLY
LEFT BLANK

SECTION 13220

THIS PAGE INTENTIONALLY
LEFT BLANK

WRAP MODULE 2A

SPECIFICATION SECTION
FOR
13220 LIQUID WASTE FILTERS

TABLE OF CONTENTS

PART 1 GENERAL

1.01 SECTION SCOPE
1.02 RELATED SECTIONS
1.03 REFERENCES
1.04 SYSTEM DESCRIPTION
1.05 SUBMITTALS
1.06 DELIVERY, STORAGE AND HANDLING
1.07 SITE CONDITIONS

PART 2 PRODUCTS

2.01 MANUFACTURERS
2.02 MATERIALS
2.03 EQUIPMENT
2.04 COMPONENTS
2.05 FABRICATION
2.06 SHOP QUALITY CONTROL

PART 3 EXECUTION

3.01 PREPARATION
3.02 ERECTION, INSTALLATION AND APPLICATION
3.03 FIELD QUALITY CONTROL
3.04 ADJUSTING AND CLEANING
3.05 DEMONSTRATION
3.06 PROTECTION

APPENDIX

APPENDIX A DATA SHEETS

9W 6227.0229

WRAP MODULE 2A

SECTION 13220

LIQUID WASTE FILTERS

PART 1 GENERAL

1.01 SECTION SCOPE

A. This specification establishes the requirements for detailed design, fabrication, installation, start-up, and acceptance testing of liquid waste filters.

1.02 RELATED SECTIONS

1.03 REFERENCES

A. American National Standards Institute (ANSI)

B. American Society for Testing and Materials (ASTM)

C. AWS D1.1 "Structural Welding Code"

1.04 SYSTEM DESCRIPTION

A. General Description

The filters will b provided to remove particulates or trace organic constituents using bag filter elements and charcoal media respectively. To maintain flow during filter charge operations, duplex units incorporating a valued change over system will be used.

B. Construction

The filter housings will be manufactured from stainless steel with flange branch connections. Bag filter elements will be made from material compatible with the process liquids, and activated carbon carriages will be used to filter organics.

C. Data Sheets

Equipment Tag Nos. WBS Area Location Numbers and equipment data sheets for this description are provided in **Appendix A.**

END OF SECTION

9413227.0230

WRAP MODULE 2A

APPENDIX A

EQUIPMENT/INSTRUMENT DATA SHEETS

WBS LOCATION	EQUIPMENT TAG	SERVICE
1107	F-07-201	Secondary Waste - Liquid Filtration
	F-07-202	Secondary Waste - Organics Removal

9413227.0231

APRIL 1992

UE&C PROJECT NO. 6237.006

FILE NO. 13220 - A1

UNITED ENGINEERS & CONSTRUCTORS A Raytheon Company Western Operations	EQUIPMENT DATA SHEET ☒ CDR ☐ TITLE I ☐ TITLE II ☐ TITLE III	ITEM NUMBER F-07-201	PAGE 1 OF 1
CUSTOMER & LOCATION DOE-RL\WHC HANFORD, WA	PROJECT WRAP FACILITY MODULE 2A	UE&C JOB NO. 6237.006 / ACCOUNT NO.	DATE: 04/13/92 / BY: TPS

REVISIONS (DATE & BY)	A		B		C		D	
	E		F		G		H	

SERVICE	MANUFACTURER	NO. REQ'D	SOURCE OF QUOTE
ACTIVE WASTE FILTER		1 DUPLEX UNIT	

OPERATING CONDITIONS

FLUID: WATER
FLOW RATE NORMAL: 45 GPM
MAXIMUM: 50 GPM
INLET TEMPERATURE: 60 °F
INLET PRESSURE: 38 PSIG
SPECIFIC GRAVITY AT INLET TEMP.: 1.0
VISCOSITY AT INLET TEMP.: 1.13 C.S

MAX. ALLOWALBE ▲ P. CLEAN: 5 PSI
DIRTY: 10 PSI
TYPE OF SOLIDS: VARIOUS
VELOCITY THRU STRAINER: 0.033 FT/SEC
SEPARATION REQUIRED: 90%
REMOVE: PARTICLES > 25 MICRON

MATERIALS AND DESIGN

TYPE: BAG FILTER
DESIGN PRESSURE: 150 PSIG
DESIGN TEMPERATURE: °F
CODE: ASME CODE STAMPED 150 PSIG

BASKET PERFORMATIONS: 9/64 IN DIA.
LINER: MESH
BASKET LENGTH: 5.5" X DIA.: 32" L
BASKET AREA: 3.4 FT²

CONNECTIONS:
DRAIN SIZE:
VENT SIZE:

FILTER AREA: 3.4 FT²

	CASE AND COVER	TRIM	BASKET	LINER	BAC FILTERS
CAST IRON					
STEEL					
304SS					
316SS	X		X		
BRASS					
BRONZE					
NICKEL					
MONEL					

TYPE COVER	GASKET
SINGLE BOLT	TEFLON
MULTIPLE BOLT	ASBESTOS
SWING BOLT	LEAD
LIFT SCREW	NEOPRENE
HANDWHEEL	VELEMOID
THREADED	TEFLON-ASBESTOS

REMARKS: WEIGHT: 400 LBS

9413227.0232

UNITED ENGINEERS & CONSTRUCTORS A Raytheon Company Western Operations	EQUIPMENT DATA SHEET ☒ CDR ☐ TITLE I ☐ TITLE II ☐ TITLE III	ITEM NUMBER F-07-202	PAGE 1 OF 1

CUSTOMER & LOCATION	PROJECT	UE&C JOB NO.	DATE: 04/13/92
DOE-RL/WHC HANFORD, WA	WRAP FACILITY MODULE 2A	6237.006	
		ACCOUNT NO.	BY: TPS

REVISIONS (DATE & BY)	A		B		C		D	
	E		F		G		H	

SERVICE	MANUFACTURER	NO. REQ'D.	SOURCE OF QUOTE
ACTIVE CARBON FILTER		1 DUPLEX UNIT	

OPERATING CONDITIONS

FLUID FILTERED: WATER
FLOW RATE - NORMAL: 45 GPM
MAXIMUM: 50 GPM
INLET TEMPERATURE: 60 °F
INLET PRESSURE: 38 PSIG
SPECIFIC GRAVITY AT INLET TEMP.: 1.0
VISCOSITY AT INLET TEMP.: 1.13 C.S.

MAX. ALLOWABLE ΔP - CLEAN: 5 PSI
DIRTY: N/A PSI
TYPE OF SOLIDS: SOLIDS WILL BE REMOVED PRIOR TO GAC FILTERS
FILTRATION REQUIRED:
REMOVE: TRACE ORGANIC CONSTITUENTS

MATERIALS AND DESIGN

TYPE:
NUMBER OF CARTRIDGES: 20
CARTRIDGE SIZE: 2.5" X 10" L
FILTERING MEDIA: GRANULAR ACTIVATED CARBON
FILTERING AREA: N/A
DESIGN PRESSURE: PSIG
DESIGN TEMPERATURE: °F
CODE:

CONNECTIONS:
INLET:
OUTLET:
DRAINS:
PRESSURE GAUGES:
RELIEF VALVE:
RELIEF VALVE SETTING:

CASE AND COVER	TYPE COVER	GASKETS	FILTER MATERIAL	CENTER CORE
CAST IRON	SINGLE BOLT	TEFLON	COTTON	PHENOLIC
STEEL	MULTIPLE BOLT	ASBESTOS	CELULOSE ACETATE	HARD RUBBER
304ss	SWING BOLT	LEAD	GLASS FIBER	304ss
316ss X	LIFTING SCREW	NEOPRENE	NYLON	316ss
BRASS	HANDWHEEL	VELEMOID	JUTE	
BRONZE		TEFLON-ASBES.	PAPER	
			GAC X	

REMARKS: MAXIMUM FLOW OF 2.0 GPM PER 10" EQUIVALENT
WEIGHT: 200 LBS

9413227.0233

THIS PAGE INTENTIONALLY
LEFT BLANK

SECTION 13250

94/3227.0234

THIS PAGE INTENTIONALLY
LEFT BLANK

WRAP MODULE 2A

SPECIFICATION SECTION
FOR
13250 SIMPLE DOUBLE LID SYSTEM

TABLE OF CONTENTS

PART 1 GENERAL

1.01 SECTION SCOPE
1.02 RELATED SECTIONS
1.03 REFERENCES
1.04 SYSTEM DESCRIPTION
1.05 SUBMITTAL
1.06 DELIVERY, STORAGE AND HANDLING
1.07 SITE CONDITIONS

PART 2 PRODUCTS

2.01 MANUFACTURERS
2.02 MATERIALS
2.03 EQUIPMENT
2.04 COMPONENTS
2.05 FABRICATION
2.06 SHOP QUALITY CONTROL

PART 3 EXECUTION

3.01 PREPARATION
3.02 ERECTION, INSTALLATION AND APPLICATION
3.03 FIELD QUALITY CONTROL
3.04 ADJUSTING AND CLEANING
3.05 DEMONSTRATION
3.06 PROTECTION

APPENDIX

APPENDIX A DATA SHEETS

AW3227.0235

WRAP MODULE 2A

SECTION 13250

SIMPLE DOUBLE LID SYSTEMS

PART 1 GENERAL

1.01 SECTION SCOPE

A. This specification establishes the requirements for detailed design, fabrication, installation, start-up, and acceptance testing of a Simple Double Lid System for WRAP Module 2A. This will provide for the entry, exit and filling of drums while maintaining Containment integrity.

1.02 RELATED SECTIONS

1.03 REFERENCES

A. American National Standards Institute (ANSI)

B. American Society for Testing and Materials (ASTM)

C. National Electric Code (NEC)

D. AWS D1.1 "Structural Welding Code"

E. NEMA MG-1 Motors and Generators

F. Anti Friction Bearing Manufacturers Association (AFBMA)

1.04 SYSTEM DESCRIPTION

A. The Airlock Systems provide the following functions. -

1. To maintain radiological containment between different category areas during the transfer or filling of drums.

2. To minimize the ventilation volume flows during transfers.

B. General Description

1. Doors are located over ports in the floor of the enclosure, a pneumatic cylinders are used to open the doors to allow access through the ports. Three types

9413227.0236

of door are used dependant on the location and the operation being carried out, these are:

- Hinged door with lid removal facility
- Sliding door with removal facility
- Sliding door

2. Doors with lid removal capabilities incorporate an elastomeric seal ring to which the lid is held while the door is open, this prevents contamination of the lid exterior during posting operations.

3. When the doors are closed a small engineered gap between the port and the door allow an airflow to pass into the enclosure and keep the port area clear of contamination. During posting or filling operations the drum is positioned at the port entrance and provides a restriction to the air entering the enclosure which maintains velocity at a level to prevent external contamination.

C. Construction

1. The door will be constructed from stainless steel and the enclosure will be locally strengthened to accommodate the loading from the opening mechanism and to ensure dimensional stability of the air gap area.

2. Pneumatic cylinders are used to operate the doors and the actuator for the magnets which are used to hold the drum lids in position where this feature is incorporated.

D. Control and Instrumentation

1. The operating pneumatic cylinders will be interfaced with Control and Safety interlocks.

2. The control interlocks will consist of switches to limit extremes of travel of the door and provide an indication of the door status to the Plant Operators.

3. The safety interlocks will prevent movement of the door if drums are not located below the entry port.

6237.0237

Switches will be located on the cylinder to indicate open/closed positions and at the drum location to ensure correct positioning before opening.

E. Data Sheets

Equipment Tag Nos., WBS Area Location Numbers and equipment data sheets for this description are provided in **Appendix A.**

END OF SECTION

9413227.0238

WRAP MODULE 2A

APPENDIX A

EQUIPMENT/INSTRUMENT DATA SHEETS

WBS LOCATION	EQUIPMENT TAG	SERVICE
1105	DO-05-201	Agitated Grout - Drum Fill
1105	DO-05-202	Vibro Grout - Drum Fill
1105	DO-05-203	Vibro Grout - Drum Inspect
1105	DO-05-401	Polymer Encaps - Drum Fill
1105	DO-05-402	Polymer Encaps - Drum Fill
1105	DO-05-403	Polymer Encaps - Drum Fill
1105	DO-05-404	Polymer Encaps - Drum Fill
1105	DO-05-521	Size Reduction - Drum Entry
1105	DO-05-522	Size Reduction - Drum Entry
1105	DO-05-523	Size Reduction - Transfer from Box Breakdown
1105	DO-05-541	Pug Mill - Drum Entry
1105	DO-05-542	Pug Mill - Drum Entry
1105	DO-05-543	Box Breakdown - Non-Compliant Drum Exit
1105	DO-05-562	Size Reduction - Drum Fill

9413227.0239

WRAP MODULE 2A

WBS LOCATION	EQUIPMENT TAG	SERVICE
1105	DO-05-524A,B	Size Reduction - Drum Fill
1105	DO-05-544	Pug Mill - Drum Fill
1106	DO-06-101	Special Waste - Drum Entry
1106	DO-06-102	Special Waste - Lead Fill
1106	DO-06-103	Special Waste - Drum Entry
1106	DO-06-201	Special Waste - Mercury Fill
1106	DO-06-202	Special Waste - Evaporator Fill
1106	DO-06-304	Reactive Metals Sliding Hatch
1106	DO-06-305	Reactive Metals Sliding Hatch
1105	DO-05-620	Sample Area Sphinster Port
1105	DO-05-622	Sample Area Drum Entry
1105	DO-05-623	Sample Area Drum Entry

9413227.0240

UNITED ENGINEERS & CONSTRUCTORS A Raytheon Company Western Operations	EQUIPMENT DATA SHEET ☒ CDR ☐ TITLE I ☐ TITLE II ☐ TITLE III	ITEM NUMBER DO-05-201	PAGE 1 OF 1

CUSTOMER & LOCATION	PROJECT	UE&C JOB NO. 6237.006	DATE: 06/15/92
DOE-RL/WHC HANFORD, WA	WRAP FACILITY MODULE 2A	ACCOUNT NO.	BY: SMM

REVISIONS (DATE & BY)	A		B		C		D	
	E		F		G		H	

SERVICE	MANUFACTURER	NO. REQ'D.	SOURCE OF QUOTE
SINGLE DOUBLE LID DOOR		1	

SIMPLE DOUBLE LIDDED DOOR SYSTEM

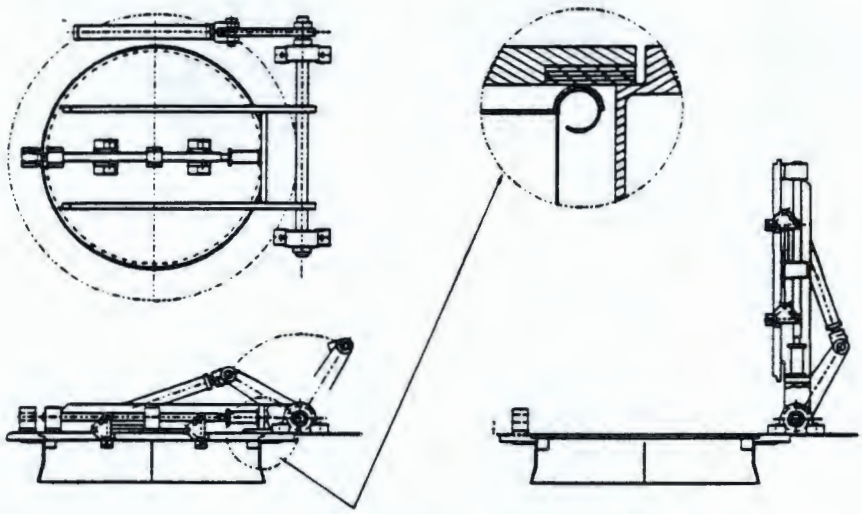

CONDITIONS OF SERVICE		DIMENSIONS	
APPLICATION: CONTAINMENT SYSTEM ALLOWING INTRODUCTION OF 55 GAL WASTE DRUMS W/O BREACH		A:	F:
UNIT LOAD DESCRIPTION: 55 GALLON WASTE DRUM AND LID		B:	G:
UNIT LOAD SIZE: 22.5" DIA X 34.5" HIGH	DUTY: 8 HOURS/DAY	C:	H:
UNIT LOAD WEIGHT: 1,000 LBS	AVAILABLE POWER: 480/3/60 & 90 PSI AIR	D:	I:
LOCATION:	CONTROL INTERFACE: SWITCH INPUT	E:	J:
RATED CAPACITY: 22.5" DIA	~~NEC AREA CLASS: UNCLASSIFIED~~		
C/L DRUM FROM C/L PORT (OFF CEN. TOL.): <.197"	DRUM/PORT SEALING PRESSURE: 20 PSI		
CONSTRUCTION			
DRUM INTERFACE: 55 GAL DRUM, 22.5" DIA RUBBER	EMERGENCY CLOSING: REQUIRED		
TYPE OF CONTROL: REMOTE	LIMIT SWITCHES: ELECTRICAL @LID, LOCK, OPEN/CLOSE		
CELL LID/CROSS LID LIFT: PNEUMATIC VERTICAL W/LINKAGE	ACTUATION: PNEUMATIC		
CELL LID/CROSS LID MOVE: DIRECT PNEUMATIC HORIZONTAL	EMERGENCY CONTROLS: REQUIRED		
CELL LID/CROSS LID LOCKS: MAGNET/LINKAGE/PNEUMATIC	CELL LID: ALIGNING		
LID STOPS: HARD	CONTROL PANEL: REMOTE		
MOUNTING BASE PLATE: .75"			
MATERIAL: 304 SS, 400 SERIES OTHERS			

9413227.0241

UNITED ENGINEERS & CONSTRUCTORS A Raytheon Company Western Operations	EQUIPMENT DATA SHEET ☒ CDR ☐ TITLE I ☐ TITLE II ☐ TITLE III	ITEM NUMBER DO-06-202	PAGE 1 OF 1

CUSTOMER & LOCATION	PROJECT	UE&C JOB NO. 6237.006	DATE: 06/15/92
DOE-RL/WHC HANFORD, WA	WRAP FACILITY MODULE 2A	ACCOUNT NO.	BY: SMM

REVISIONS (DATE & BY)	A		B		C		D	
	E		F		G		H	

SERVICE	MANUFACTURER	NO. REQ'D.	SOURCE OF QUOTE
SINGLE DOUBLE LID DOOR		1	

SIMPLE DOUBLE LIDDED DOOR SYSTEM

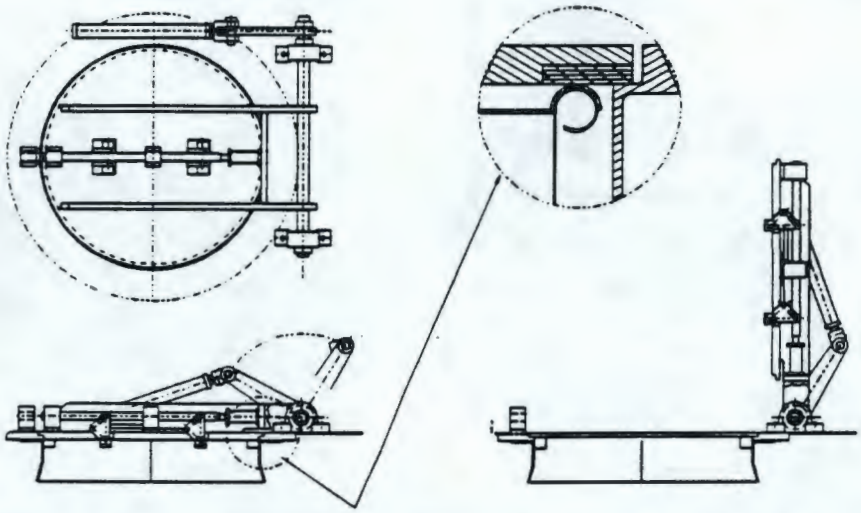

CONDITIONS OF SERVICE		DIMENSIONS	
APPLICATION: CONTAINMENT SYSTEM ALLOWING INTRODUCTION OF 55 GAL WASTE DRUMS W/O BREACH		A:	F:
UNIT LOAD DESCRIPTION: 55 GALLON WASTE DRUM AND LID		B:	G:
UNIT LOAD SIZE: 22.5" DIA X 34.5" HIGH	DUTY: 8 HOURS/DAY	C:	H:
UNIT LOAD WEIGHT: 1,000 LBS	AVAILABLE POWER: 480/3/60 & 90 PSI AIR	D:	I:
LOCATION:	CONTROL INTERFACE: SWITCH INPUT	E:	J:
RATED CAPACITY: 22.5" DIA	NEC AREA CLASS: UNCLASSIFIED		
C/L DRUM FROM C/L PORT (OFF CEN. TOL.): <.197"	DRUM/PORT SEALING PRESSURE: 20 PSI		
CONSTRUCTION			
DRUM INTERFACE: 55 GAL DRUM, 22.5" DIA RUBBER	EMERGENCY CLOSING: REQUIRED		
TYPE OF CONTROL: REMOTE	LIMIT SWITCHES: ELECTRICAL @LID, LOCK, OPEN/CLOSE		
CELL LID/CROSS LID LIFT: PNEUMATIC VERTICAL W/LINKAGE	ACTUATION: PNEUMATIC		
CELL LID/CROSS LID MOVE: DIRECT PNEUMATIC HORIZONTAL	EMERGENCY CONTROLS: REQUIRED		
CELL LID/CROSS LID LOCKS: MAGNET/LINKAGE/PNEUMATIC	CELL LID: ALIGNING		
LID STOPS: HARD	CONTROL PANEL: REMOTE		
MOUNTING BASE PLATE: .75"			
MATERIAL: 304 SS, 400 SERIES OTHERS			

UNITED ENGINEERS & CONSTRUCTORS A Raytheon Company Western Operations	EQUIPMENT DATA SHEET ☒ CDR ☐ TITLE I ☐ TITLE II ☐ TITLE III	ITEM NUMBER DO-05-203	PAGE 1 OF 1

CUSTOMER & LOCATION	PROJECT	UE&C JOB NO. 6237.006	DATE: 05/15/92
DOE-RL/WHC HANFORD, WA	WRAP FACILITY MODULE 2A	ACCOUNT NO.	BY: SMM

REVISIONS (DATE & BY)	A		B		C		D	
	E		F		G		H	

SERVICE	MANUFACTURER	NO. REQ'D.	SOURCE OF QUOTE
SINGLE DOUBLE LID DOOR		1	

SIMPLE DOUBLE LIDDED DOOR SYSTEM

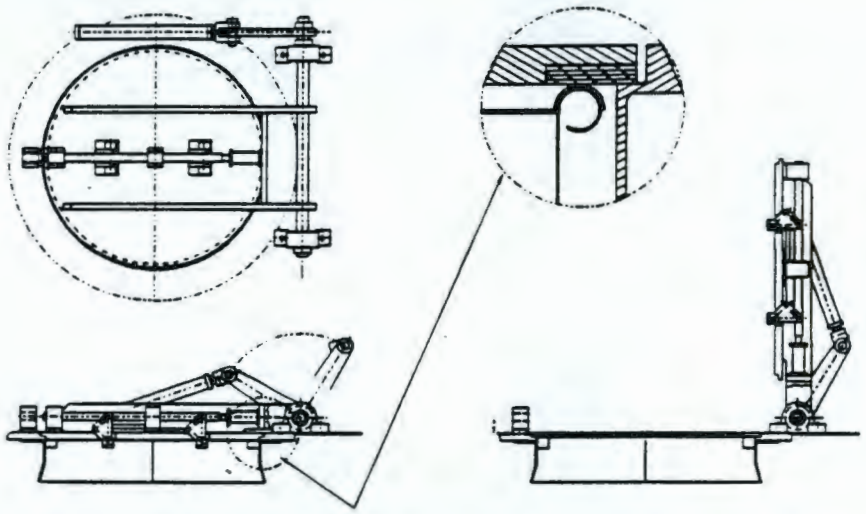

CONDITIONS OF SERVICE		DIMENSIONS	
APPLICATION: CONTAINMENT SYSTEM ALLOWING INTRODUCTION OF 55 GAL WASTE DRUMS W/O BREACH		A:	F:
UNIT LOAD DESCRIPTION: 55 GALLON WASTE DRUM AND LID		B:	G:
UNIT LOAD SIZE: 22.5" DIA X 34.5" HIGH	DUTY: 8 HOURS/DAY	C:	H:
UNIT LOAD WEIGHT: 1,000 LBS	AVAILABLE POWER: 480/3/60 & 90 PSI AIR	D:	I:
LOCATION:	CONTROL INTERFACE: SWITCH INPUT	E:	J:
RATED CAPACITY: 22.5" DIA	NEC AREA CLASS: UNCLASSIFIED		
C/L DRUM FROM C/L PORT (OFF CEN. TOL.): <.197"	DRUM/PORT SEALING PRESSURE: 20 PSI		
CONSTRUCTION			
DRUM INTERFACE: 55 GAL DRUM, 22.5" DIA RUBBER	EMERGENCY CLOSING: REQUIRED		
TYPE OF CONTROL: REMOTE	LIMIT SWITCHES: ELECTRICAL @LID, LOCK, OPEN/CLOSE		
CELL LID/CROSS LID LIFT: PNEUMATIC VERTICAL W/LINKAGE	ACTUATION: PNEUMATIC		
CELL LID/CROSS LID MOVE: DIRECT PNEUMATIC HORIZONTAL	EMERGENCY CONTROLS: REQUIRED		
CELL LID/CROSS LID LOCKS: MAGNET/LINKAGE/PNEUMATIC	CELL LID: ALIGNING		
LID STOPS: HARD	CONTROL PANEL: REMOTE		
MOUNTING BASE PLATE: .75"			
MATERIAL: 304 SS, 400 SERIES OTHERS			

9413227.0243

UNITED ENGINEERS & CONSTRUCTORS A Raytheon Company Western Operations	EQUIPMENT DATA SHEET ☒ CDR ☐ TITLE I ☐ TITLE II ☐ TITLE III	ITEM NUMBER DO-05-401	PAGE 1 OF 1

CUSTOMER & LOCATION	PROJECT	UE&C JOB NO. 6237.006	DATE: 05/12/92
DOE-RL/WHC HANFORD, WA	WRAP FACILITY MODULE 2A	ACCOUNT NO.	BY: RLH

REVISIONS (DATE & BY)	A		B		C		D	
	E		F		G		H	

SERVICE	MANUFACTURER	NO. REQ'D.	SOURCE OF QUOTE
SINGLE DOUBLE LID DOOR		1	

SIMPLE DOUBLE LIDDED DOOR SYSTEM

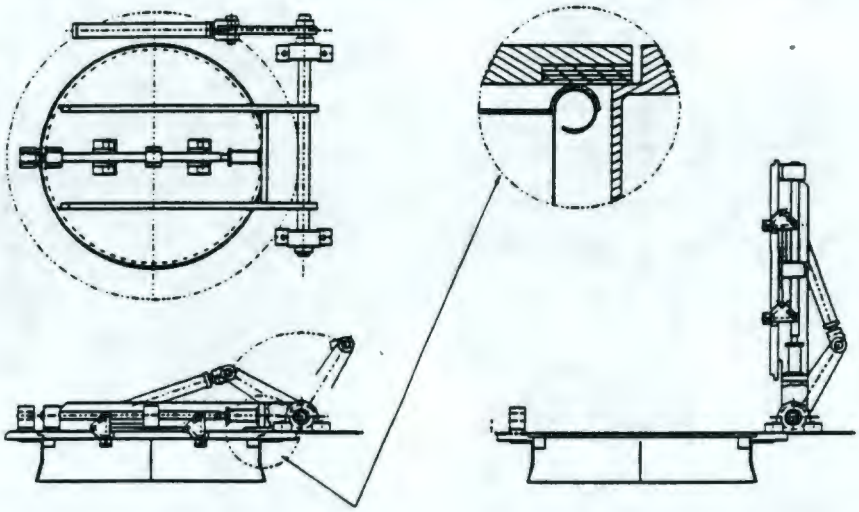

CONDITIONS OF SERVICE		DIMENSIONS	
APPLICATION: CONTAINMENT SYSTEM ALLOWING INTRODUCTION OF 55 GAL WASTE DRUMS W/O BREACH		A:	F:
UNIT LOAD DESCRIPTION: 55 GALLON WASTE DRUM AND LID		B:	G:
UNIT LOAD SIZE: 22.5" DIA X 34.5" HIGH	DUTY: 8 HOURS/DAY	C:	H:
UNIT LOAD WEIGHT: 1,000 LBS	AVAILABLE POWER: 480/3/60 & 90 PSI AIR	D:	I:
LOCATION:	CONTROL INTERFACE: SWITCH INPUT	E:	J:
RATED CAPACITY: 22.5" DIA	NEC AREA CLASS: UNCLASSIFIED		
C/L DRUM FROM C/L PORT (OFF CEN. TOL.): <.197"	DRUM/PORT SEALING PRESSURE: 20 PSI		
CONSTRUCTION			
DRUM INTERFACE: 55 GAL DRUM, 22.5" DIA RUBBER	EMERGENCY CLOSING: REQUIRED		
TYPE OF CONTROL: REMOTE	LIMIT SWITCHES: ELECTRICAL @LID, LOCK, OPEN/CLOSE		
CELL LID/CROSS LID LIFT: PNEUMATIC VERTICAL W/LINKAGE	ACTUATION: PNEUMATIC		
CELL LID/CROSS LID MOVE: DIRECT PNEUMATIC HORIZONTAL	EMERGENCY CONTROLS: REQUIRED		
CELL LID/CROSS LID LOCKS: MAGNET/LINKAGE/PNEUMATIC	CELL LID: SELF ALIGNING		
LID STOPS: HARD	CONTROL PANEL: REMOTE		
MOUNTING BASE PLATE: .75"			
MATERIAL: 304 SS, 400 SERIES OTHERS			

UNITED ENGINEERS & CONSTRUCTORS A Raytheon Company Western Operations	EQUIPMENT DATA SHEET ☒ CDR ☐ TITLE I ☐ TITLE II ☐ TITLE III	ITEM NUMBER DO-05-402	PAGE 1 OF 1

CUSTOMER & LOCATION	PROJECT	UE&C JOB NO. 6237.006	DATE: 06/12/92
DOE-RL/WHC HANFORD, WA	WRAP FACILITY MODULE 2A	ACCOUNT NO.	BY: RLH

REVISIONS (DATE & BY)	A		B		C		D	
	E		F		G		H	

SERVICE	MANUFACTURER	NO. REQ'D.	SOURCE OF QUOTE
SINGLE DOUBLE LID DOOR		1	

SIMPLE DOUBLE LIDDED DOOR SYSTEM

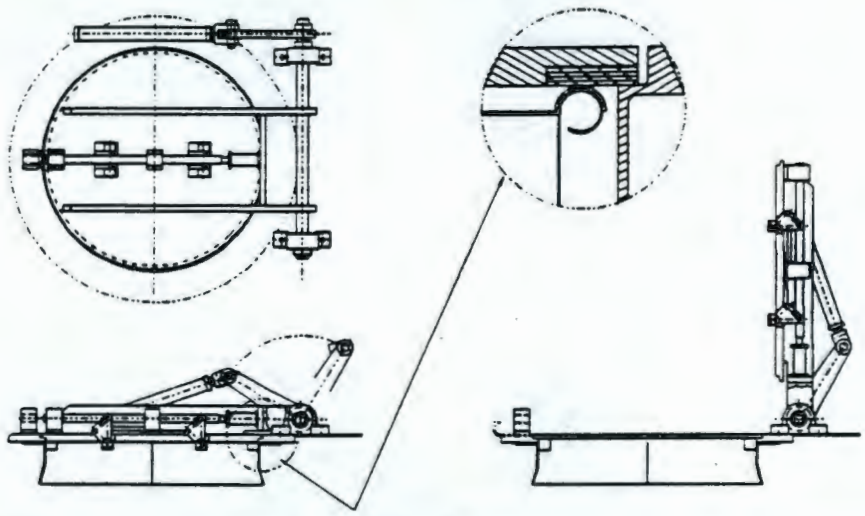

CONDITIONS OF SERVICE		DIMENSIONS	
APPLICATION: CONTAINMENT SYSTEM ALLOWING INTRODUCTION OF 55 GAL WASTE DRUMS W/O BREACH		A:	F:
UNIT LOAD DESCRIPTION: 55 GALLON WASTE DRUM AND LID		B:	G:
UNIT LOAD SIZE: 22.5" DIA X 34.5" HIGH	DUTY: 8 HOURS/DAY	C:	H:
UNIT LOAD WEIGHT: 1,000 LBS	AVAILABLE POWER: 480/3/60 & 90 PSI AIR	D:	I:
LOCATION:	CONTROL INTERFACE: SWITCH INPUT	E:	J:
RATED CAPACITY: 22.5" DIA	NEC AREA CLASS: UNCLASSIFIED		
C/L DRUM FROM C/L PORT (OFF CEN. TOL.): <.197"	DRUM/PORT SEALING PRESSURE: 20 PSI		
CONSTRUCTION			
DRUM INTERFACE: 55 GAL DRUM, 22.5" DIA RUBBER	EMERGENCY CLOSING: REQUIRED		
TYPE OF CONTROL: REMOTE	LIMIT SWITCHES: ELECTRICAL @LID, LOCK, OPEN/CLOSE		
CELL LID/CROSS LID LIFT: PNEUMATIC VERTICAL W/LINKAGE	ACTUATION: PNEUMATIC		
CELL LID/CROSS LID MOVE: DIRECT PNEUMATIC HORIZONTAL	EMERGENCY CONTROLS: REQUIRED		
CELL LID/CROSS LID LOCKS: MAGNET/LINKAGE/PNEUMATIC	CELL LID: SELF ALIGNING		
LID STOPS: HARD	CONTROL PANEL: REMOTE		
MOUNTING BASE PLATE: .75"			
MATERIAL: 304 SS, 400 SERIES OTHERS			

9413927.0245

UNITED ENGINEERS & CONSTRUCTORS A Raytheon Company Western Operations	EQUIPMENT DATA SHEET ☒ CDR ☐ TITLE I ☐ TITLE II ☐ TITLE III	ITEM NUMBER DO-05-403	PAGE 1 OF 1

CUSTOMER & LOCATION	PROJECT	UE&C JOB NO. 6237.006	DATE: 05/12/92
DOE-RL/WHC HANFORD, WA	WRAP FACILITY MODULE 2A	ACCOUNT NO.	BY: RLH

REVISIONS (DATE & BY)	A		B		C		D	
	E		F		G		H	

SERVICE	MANUFACTURER	NO. REQ'D.	SOURCE OF QUOTE
SINGLE DOUBLE LID DOOR		1	

SIMPLE DOUBLE LIDDED DOOR SYSTEM

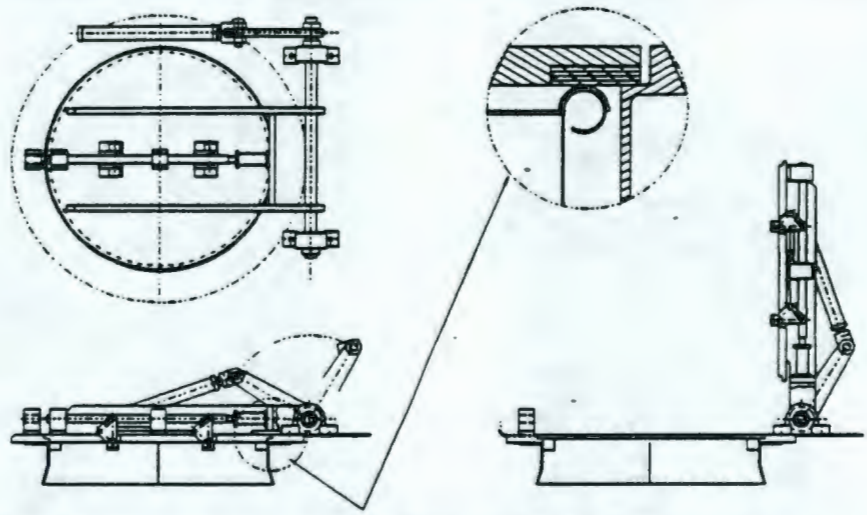

CONDITIONS OF SERVICE		DIMENSIONS	
APPLICATION: CONTAINMENT SYSTEM ALLOWING INTRODUCTION OF 55 GAL WASTE DRUMS W/O BREACH		A:	F:
UNIT LOAD DESCRIPTION: 55 GALLON WASTE DRUM AND LID		B:	G:
UNIT LOAD SIZE: 22.5" DIA X 34.5" HIGH	DUTY: 8 HOURS/DAY	C:	H:
UNIT LOAD WEIGHT: 1,000 LBS	AVAILABLE POWER: 480/3/60 & 90 PSI AIR	D:	I:
LOCATION:	CONTROL INTERFACE: SWITCH INPUT	E:	J:
RATED CAPACITY: 22.5" DIA	NEC AREA CLASS: UNCLASSIFIED		
C/L DRUM FROM C/L PORT (OFF CEN. TOL.): <.197"	DRUM/PORT SEALING PRESSURE: 20 PSI		
CONSTRUCTION			
DRUM INTERFACE: 55 GAL DRUM, 22.5" DIA RUBBER	EMERGENCY CLOSING: REQUIRED		
TYPE OF CONTROL: REMOTE	LIMIT SWITCHES: ELECTRICAL @LID, LOCK, OPEN/CLOSE		
CELL LID/CROSS LID LIFT: PNEUMATIC VERTICAL W/LINKAGE	ACTUATION: PNEUMATIC		
CELL LID/CROSS LID MOVE: DIRECT PNEUMATIC HORIZONTAL	EMERGENCY CONTROLS: REQUIRED		
CELL LID/CROSS LID LOCKS: MAGNET/LINKAGE/PNEUMATIC	CELL LID: SELF ALIGNING		
LID STOPS: HARD	CONTROL PANEL: REMOTE		
MOUNTING BASE PLATE: .75"			
MATERIAL: 304 SS, 400 SERIES OTHERS			

UNITED ENGINEERS & CONSTRUCTORS A Raytheon Company Western Operations	EQUIPMENT DATA SHEET ☒ CDR ☐ TITLE I ☐ TITLE II ☐ TITLE III	ITEM NUMBER DO-05-404	PAGE 1 OF 1

CUSTOMER & LOCATION	PROJECT	UE&C JOB NO. 6237.006	DATE: 06/12/92
DOE-RL/WHC HANFORD, WA	WRAP FACILITY MODULE 2A	ACCOUNT NO.	BY: RLH

REVISIONS (DATE & BY)	A		B		C		D	
	E		F		G		H	

SERVICE	MANUFACTURER	NO. REQ'D.	SOURCE OF QUOTE
SINGLE DOUBLE LID DOOR		1	

SIMPLE DOUBLE LIDDED DOOR SYSTEM

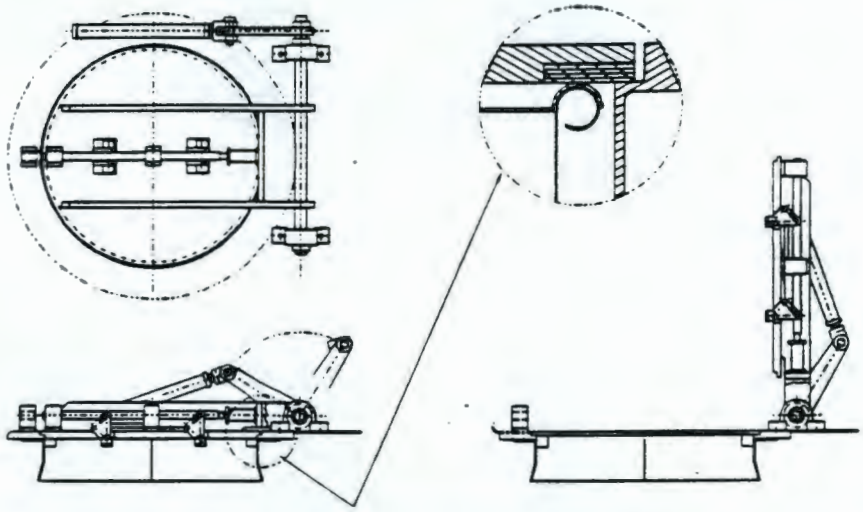

CONDITIONS OF SERVICE		DIMENSIONS	
APPLICATION: CONTAINMENT SYSTEM ALLOWING INTRODUCTION OF 55 GAL WASTE DRUMS W/O BREACH		A:	F:
UNIT LOAD DESCRIPTION: 55 GALLON WASTE DRUM AND LID		B:	G:
UNIT LOAD SIZE: 22.5" DIA X 34.5" HIGH	DUTY: 8 HOURS/DAY	C:	H:
UNIT LOAD WEIGHT: 1,000 LBS	AVAILABLE POWER: 480/3/60 & 90 PSI AIR	D:	I:
LOCATION:	CONTROL INTERFACE: SWITCH INPUT	E:	J:
RATED CAPACITY: 22.5" DIA	NEC AREA CLASS: UNCLASSIFIED		
C/L DRUM FROM C/L PORT (OFF CEN. TOL.): <.197"	DRUM/PORT SEALING PRESSURE: 20 PSI		
CONSTRUCTION			
DRUM INTERFACE: 55 GAL DRUM, 22.5" DIA RUBBER	EMERGENCY CLOSING: REQUIRED		
TYPE OF CONTROL: REMOTE	LIMIT SWITCHES: ELECTRICAL @LID, LOCK, OPEN/CLOSE		
CELL LID/CROSS LID LIFT: PNEUMATIC VERTICAL W/LINKAGE	ACTUATION: PNEUMATIC		
CELL LID/CROSS LID MOVE: DIRECT PNEUMATIC HORIZONTAL	EMERGENCY CONTROLS: REQUIRED		
CELL LID/CROSS LID LOCKS: MAGNET/LINKAGE/PNEUMATIC	CELL LID: SELF ALIGNING		
LID STOPS: HARD	CONTROL PANEL: REMOTE		
MOUNTING BASE PLATE: .75"			
MATERIAL: 304 SS, 400 SERIES OTHERS			

9413227.0247

UNITED ENGINEERS & CONSTRUCTORS A Raytheon Company Western Operations	EQUIPMENT DATA SHEET ☒ CDR ☐ TITLE I ☐ TITLE II ☐ TITLE III	ITEM NUMBER DO-05-521	PAGE 1 OF 1

CUSTOMER & LOCATION	PROJECT	UE&C JOB NO. 6237.006	DATE: 05/12/92
DOE-RL/WHC HANFORD, WA	WRAP FACILITY MODULE 2A	ACCOUNT NO.	BY: SAS

REVISIONS (DATE & BY)	A		B		C		D	
	E		F		G		H	

SERVICE	MANUFACTURER	NO. REQ'D.	SOURCE OF QUOTE
SIMPLE DOUBLE LID DOOR		1	

SIMPLE DOUBLE LID DOOR SYSTEM

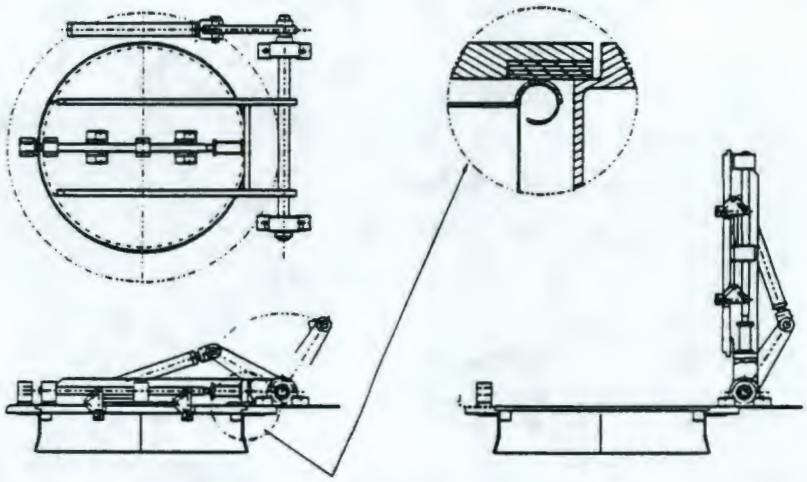

CONDITIONS OF SERVICE		DIMENSIONS	
APPLICATION: CONTAINMENT SYSTEM ALLOWING INTRODUCTION OF 55 & 85 GAL DRUMS W/O BREACH		A:	F:
UNIT LOAD DESCRIPTION: 55 AND 85 GALLON DRUMS CONTAINING LLRMW		B:	G:
UNIT LOAD SIZE: 26" DIA X 39" HIGH	DUTY: 8 HRS/DAY	C:	H:
UNIT LOAD WEIGHT: 3,000 LBS	AVAILABLE POWER: 480/3/60 & 90 PSI AIR	D:	I:
LOCATION: SHREDDING AND REPACK ENCLOSURE	CONTROL INTERFACE: SWITCH INPUT	E:	J:
RATED CAPACITY: 26" DIA	NEC AREA CLASS: UNCLASSIFIED		
C/L DRUM FROM C/L PORT (OFF CEN. TOL.): <.197"	DRUM/PORT SEALING PRESSURE: 20 PSI		

CONSTRUCTION			
DRUM INTERFACE: 85 GALLON COVERPACK, 26" DIA RUBBER	EMERGENCY CLOSING: REQUIRED		
TYPE OF CONTROL: REMOTE	LIMIT SWITCHES: ELECTRICAL @LID, LOCK, OPEN/CLOSE		
CELL LID/CROSS LID LIFT: PNEUMATIC VERTICAL W/LINKAGE	ACTUATION: PNEUMATIC		
CELL LID/CROSS LID MOVE: DIRECT PNEUMATIC HORIZONTAL	EMERGENCY CONTROLS: REQUIRED		
CELL LID/CROSS LID LOCKS: MAGNET/LINKAGE/PNEUMATIC	CELL LID: SELF ALIGNING		
LID STOPS: HARD	CONTROL PANEL: REMOTE		
MOUNTING BASE PLATE: .75"			
MATERIAL: 304-SS, 400 SERIES OTHERS			

UNITED ENGINEERS & CONSTRUCTORS A Raytheon Company Western Operations	EQUIPMENT DATA SHEET ☒ CDR ☐ TITLE I ☐ TITLE II ☐ TITLE III	ITEM NUMBER DO-05-522	PAGE 1 OF 1

CUSTOMER & LOCATION	PROJECT	UE&C JOB NO. 6237.006	DATE: 05/05/92
DOE-RL/WHC HANFORD, WA	WRAP FACILITY MODULE 2A	ACCOUNT NO.	BY: SAS

REVISIONS (DATE & BY)	A		B		C		D	
	E		F		G		H	

SERVICE	MANUFACTURER	NO. REQ'D.	SOURCE OF QUOTE
GLOVEBOX CONTAINMENT		1	

SLIDING HATCH

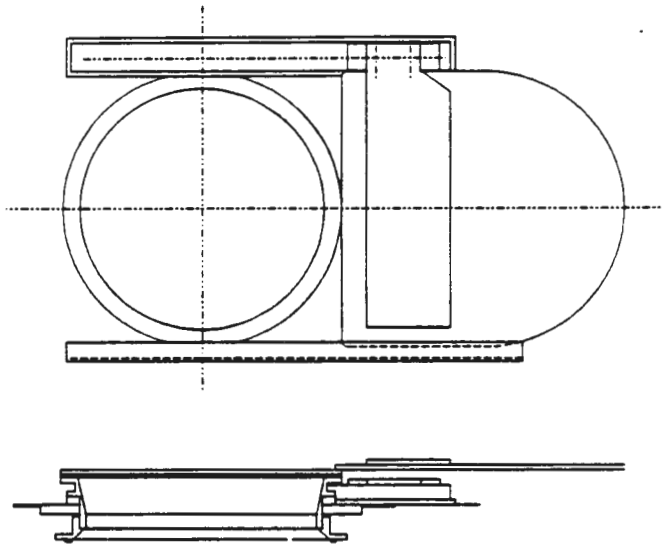

CONDITIONS OF SERVICE		DIMENSIONS	
APPLICATION: CONTAINMENT SYSTEM ALLOWING TRANSFER OF LLRMW DRUMS BETWEEN ENCLOSURES		A:	F:
UNIT LOAD DESCRIPTION: 55 & 85 GALLON DRUMS		B:	G:
UNIT LOAD SIZE: 26" DIA X 39" HIGH	DUTY: 8 HRS/DAY	C:	H:
UNIT LOAD WEIGHT: 3,000 LBS	AVAILABLE POWER: 480/3/60 & 90 PSI AIR	D:	I:
LOCATION: SHREDDING AND REPACK ENCLOSURE	CONTROL INTERFACE: SWITCH INPUT	E:	J:
RATED CAPACITY: 26.5DIA	NEC AREA CLASS: UNCLASSIFIED		
C/L DRUM FROM C/L PORT (OFF CEN. TOL.): <.197"	DRUM/PORT SEALING PRESSURE: 20 PSI		
CONSTRUCTION			
DRUM INTERFACE: 55 GALLON WITH CROSS LID	EMERGENCY CLOSING: REQUIRED		
TYPE OF CONTROL: REMOTE	LIMIT SWITCHES: ELECTRICAL @LID, LOCK, OPEN/CLOSE		
CELL LID/CROSS LID LIFT: PNEUMATIC SWING	ACTUATION: PNEUMATIC		
CELL LID/CROSS LID MOVE: DIRECT PNEUMATIC HORIZONTAL	EMERGENCY CONTROLS: REQUIRED		
CELL LID/CROSS LID LOCKS: OVER CENTER HOOK LINES	CELL LID: SELF ALIGNING		
LID STOPS: OVER CENTER CLOVE HOOKS	CONTROL PANEL: REMOTE		
MOUNTING BASE PLATE: .75"			
MATERIAL: 304 SS, 400 SERIES OTHERS			

9413227.0249

UNITED ENGINEERS & CONSTRUCTORS A Raytheon Company Western Operations	EQUIPMENT DATA SHEET ☒ CDR ☐ TITLE I ☐ TITLE II ☐ TITLE III	ITEM NUMBER DO-05-523	PAGE 1 OF 1

CUSTOMER & LOCATION	PROJECT	UE&C JOB NO. 6237.006	DATE: 05/12/92
DOE-RL/WHC HANFORD, WA	WRAP FACILITY MODULE 2A	ACCOUNT NO.	BY: SAS

REVISIONS (DATE & BY)	A		B		C		D	
	E		F		G		H	

SERVICE	MANUFACTURER	NO. REQ'D.	SOURCE OF QUOTE
SIMPLE DOUBLE LID DOOR		1	

SIMPLE DOUBLE LIDDED DOOR SYSTEM

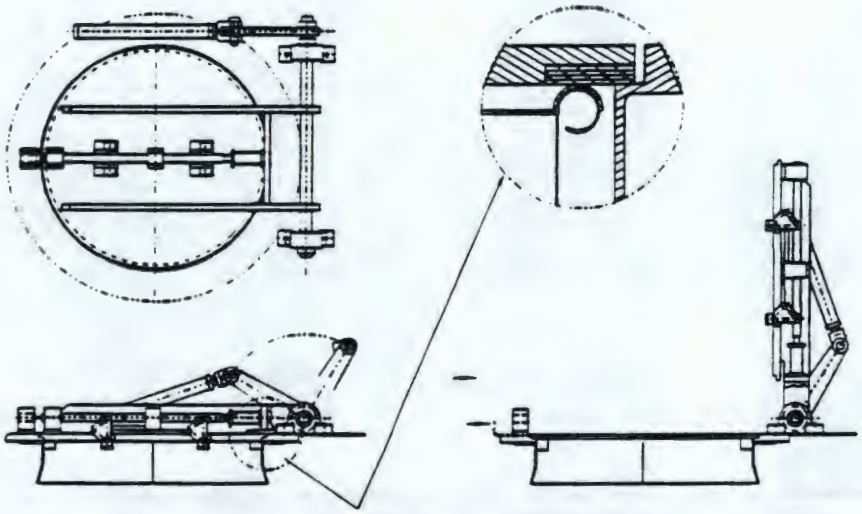

CONDITIONS OF SERVICE		DIMENSIONS	
APPLICATION: CONTAINMENT SYSTEM ALLOWING REMOVAL OF WASTE INTO 55 GAL DRUMS W/O BREACH OF CONTAINMENT		A:	F:
UNIT LOAD DESCRIPTION: 55 GALLON DRUM CONTAINING NONSHREDDABLE WASTE		B:	G:
UNIT LOAD SIZE: 22.5" DIA X 34.5" HIGH	DUTY: 8 HRS/DAY	C:	H:
UNIT LOAD WEIGHT: 1,000 LBS	AVAILABLE POWER: 480/3/60 & 90 PSI AIR	D:	I:
LOCATION: SHREDDING & REPACK ENCLOSURE	CONTROL INTERFACE: SWITCH INPUT	E:	J:
RATED CAPACITY: 22.5" DIA	NEC AREA CLASS: UNCLASSIFIED		
C/L DRUM FROM C/L PORT (OFF CEN. TOL.): <.197"	DRUM/PORT SEALING PRESSURE: 20 PSI		
CONSTRUCTION			
DRUM INTERFACE: 55 GAL DRUM, 22.5" DIA RUBBER	EMERGENCY CLOSING: REQUIRED		
TYPE OF CONTROL: REMOTE	LIMIT SWITCHES: ELECTRICAL @LID, LOCK, OPEN/CLOSE		
CELL LID/CROSS LID LIFT: PNEUMATIC VERTICAL W/LINKAGE	ACTUATION: PNEUMATIC		
CELL LID/CROSS LID MOVE: DIRECT PNEUMATIC HORIZONTAL	EMERGENCY CONTROLS: REQUIRED		
CELL LID/CROSS LID LOCKS: MAGNET/LINKAGE/PNEUMATIC	CELL LID: SELF ALIGNING		
LID STOPS: HARD	CONTROL PANEL: REMOTE		
MOUNTING BASE PLATE: .75"			
MATERIAL: 304 SS, 400 SERIES OTHERS			

UNITED ENGINEERS & CONSTRUCTORS A Raytheon Company Western Operations	EQUIPMENT DATA SHEET ☒ CDR ☐ TITLE I ☐ TITLE II ☐ TITLE III	ITEM NUMBER DO-05-541	PAGE 1 OF 1

CUSTOMER & LOCATION	PROJECT	UE&C JOB NO. 6237.006	DATE: 05/13/92
DOE-RL/WHC HANFORD, WA	WRAP FACILITY MODULE 2A	ACCOUNT NO.	BY: SAS

REVISIONS (DATE & BY)	A		B		C		D	
	E		F		G		H	

SERVICE	MANUFACTURER	NO. REQ'D.	SOURCE OF QUOTE
SIMPLE DOUBLE LID DOOR		1	

SIMPLE DOUBLE LIDDED DOOR SYSTEM

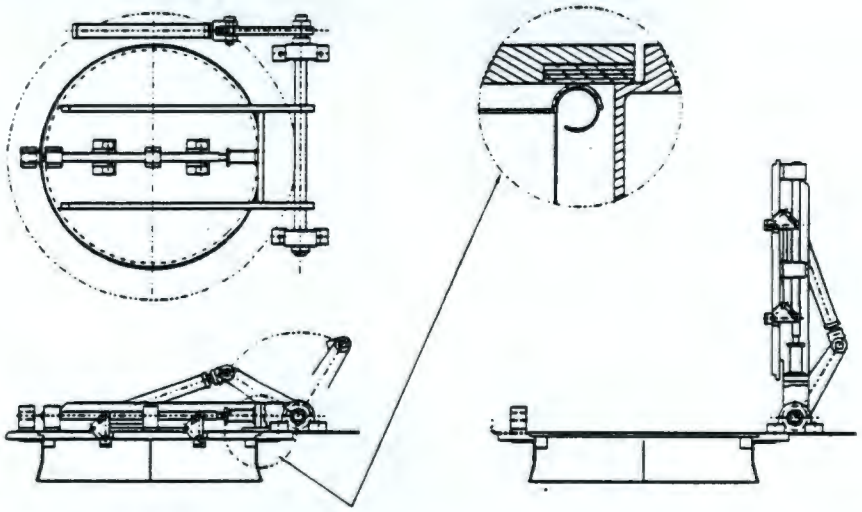

CONDITIONS OF SERVICE		DIMENSIONS	
APPLICATION: CONTAINMENT SYSTEM ALLOWING INTRODUCTION OF 55 & 85 GAL WASTE DRUMS W/O BREACH OF CONTAINMENT		A:	F:
UNIT LOAD DESCRIPTION: 55 AND 85 GAL WASTE DRUM CONTAINING LLRMW		B:	G:
UNIT LOAD SIZE: 26" DIA X 39" HIGH	DUTY: 8 HOURS/DAY	C:	H:
UNIT LOAD WEIGHT: 3,000 LBS	AVAILABLE POWER: 480/3/60 & 90 PSI AIR	D:	I:
LOCATION: PUG MILL ENCLOSURE	CONTROL INTERFACE: SWITCH INPUT	E:	J:
RATED CAPACITY: 26" DIA	NEC AREA CLASS: UNCLASSIFIED		
C/L DRUM FROM C/L PORT (OFF CEN. TOL.): <.197"	DRUM/PORT SEALING PRESSURE: 20 PSI		
CONSTRUCTION			
DRUM INTERFACE: 55 GAL DRUM, 26" DIA RUBBER	EMERGENCY CLOSING: REQUIRED		
TYPE OF CONTROL: REMOTE	LIMIT SWITCHES: ELECTRICAL @LID, LOCK, OPEN/CLOSE		
CELL LID/CROSS LID LIFT: PNEUMATIC VERTICAL W/LINKAGE	ACTUATION: PNEUMATIC		
CELL LID/CROSS LID MOVE: DIRECT PNEUMATIC HORIZONTAL	EMERGENCY CONTROLS: REQUIRED		
CELL LID/CROSS LID LOCKS: MAGNET/LINKAGE/PNEUMATIC	CELL LID: SELF ALIGNING		
LID STOPS: HARD	CONTROL PANEL: REMOTE		
MOUNTING BASE PLATE: .75"			
MATERIAL: 304 SS, 400 SERIES OTHERS			

9413227.0251

UNITED ENGINEERS & CONSTRUCTORS A Raytheon Company Western Operations	EQUIPMENT DATA SHEET ☒ CDR ☐ TITLE I ☐ TITLE II ☐ TITLE III	ITEM NUMBER DO-05-542	PAGE 1 OF 1

CUSTOMER & LOCATION	PROJECT	UE&C JOB NO. 6237.006	DATE: 05/12/92
DOE-RL/WHC HANFORD, WA	WRAP FACILITY MODULE 2A	ACCOUNT NO. 1	BY: SAS

REVISIONS (DATE & BY)	A		B		C		D	
	E		F		G		H	

SERVICE	MANUFACTURER	NO. REQ'D.	SOURCE OF QUOTE
SIMPLE DOUBLE LID DOOR		1	

SLIDING HATCH

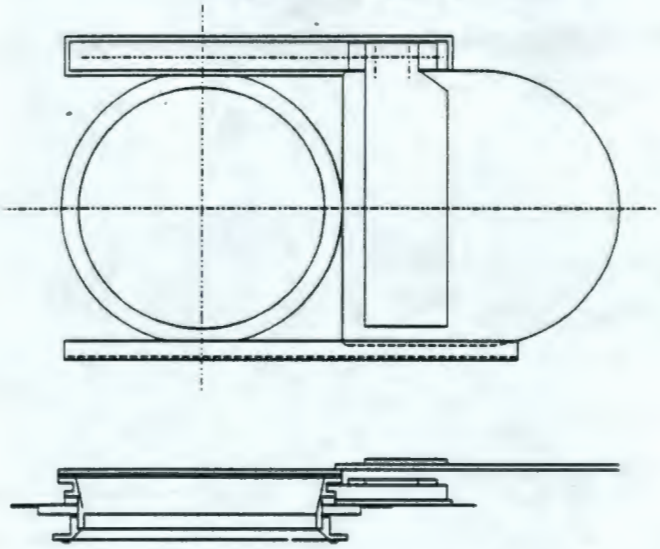

CONDITIONS OF SERVICE		DIMENSIONS	
APPLICATION: CONTAINMENT SYSTEM ALLOWING TRANSFER OF LLRMW DRUMS BETWEEN ENCLOSURES		A:	F:
UNIT LOAD DESCRIPTION: 55 & 85 GALLON DRUMS CONTAINING LLRMW		B:	G:
UNIT LOAD SIZE: 26" DIA X 39" HIGH	DUTY: 8 HRS/DAY	C:	H:
UNIT LOAD WEIGHT: 3,000 LBS	AVAILABLE POWER: 480/3/60 & 90 PSI AIR	D:	I:
LOCATION: PUG MILL ENCLOSURE	CONTROL INTERFACE: SWITCH INPUT	E:	J:
RATED CAPACITY: 26" DIA	NEC AREA CLASS: UNCLASSIFIED		
C/L DRUM FROM C/L PORT (OFF CEN. TOL.): <.197"	DRUM/PORT SEALING PRESSURE: 20 PSI		
CONSTRUCTION			
DRUM INTERFACE: 55 GALLON WITH CROSS LID	EMERGENCY CLOSING: REQUIRED		
TYPE OF CONTROL: REMOTE	LIMIT SWITCHES: ELECTRICAL @LID, LOCK, OPEN/CLOSE		
CELL LID/CROSS LID LIFT: PNEUMATIC SWING	ACTUATION: PNEUMATIC		
CELL LID/CROSS LID MOVE: DIRECT PNEUMATIC HORIZONTAL	EMERGENCY CONTROLS: REQUIRED		
CELL LID/CROSS LID LOCKS: OVER CENTER HOOK LINKS	CELL LID: SELF ALIGNING		
LID STOPS: OVER CENTER CLOVE HOOKS	CONTROL PANEL: REMOTE		
MOUNTING BASE PLATE: .75"			
MATERIAL: 304 SS, 400 SERIES OTHERS			

UNITED ENGINEERS & CONSTRUCTORS A Raytheon Company Western Operations	EQUIPMENT DATA SHEET ☒ CDR ☐ TITLE I ☐ TITLE II ☐ TITLE III	ITEM NUMBER DO-05-543	PAGE 1 OF 1

CUSTOMER & LOCATION	PROJECT	UE&C JOB NO.	DATE: 06/13/92
DOE-RL/WHC HANFORD, WA	WRAP FACILITY MODULE 2A	6237.006	
		ACCOUNT NO.	BY: SAS

REVISIONS (DATE & BY)	A		B		C		D	
	E		F		G		H	

SERVICE	MANUFACTURER	NO. REQ'D.	SOURCE OF QUOTE
SIMPLE DOUBLE LID DOOR		1	

SIMPLE DOUBLE LIDDED DOOR SYSTEM

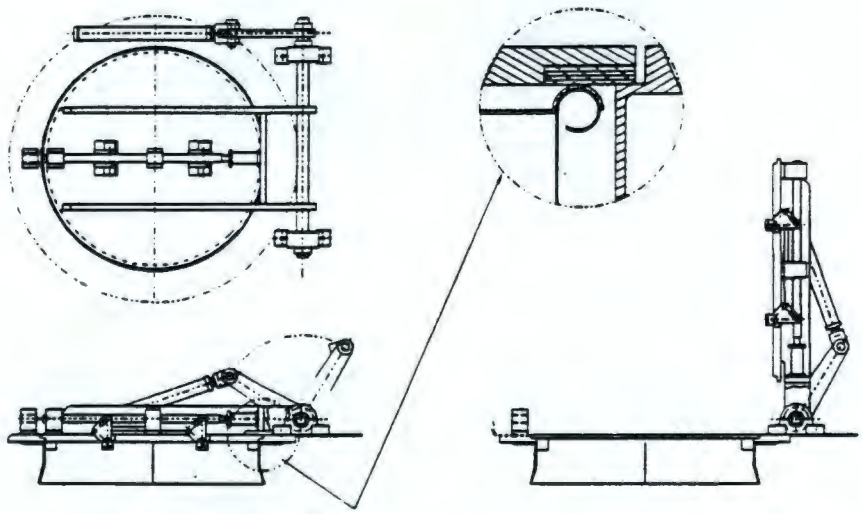

CONDITIONS OF SERVICE		DIMENSIONS	
APPLICATION: CONTAINMENT SYSTEM ALLOWING REMOVAL OF WASTE INTO 55 GAL DRUMS W/O BREACH OF CONTAINMENT		A:	F:
UNIT LOAD DESCRIPTION: 55 GAL DRUMS CONTAINING ITEMS UNSUITABLE FOR PUG MILL PROCESSING		B:	G:
UNIT LOAD SIZE: 22.5" DIA X 34.5" HIGH	DUTY: 8 HOURS/DAY	C:	H:
UNIT LOAD WEIGHT: 3,000 LBS	AVAILABLE POWER: 480/3/60 & 90 PSI AIR	D:	I:
LOCATION: PUG MILL ENCLOSURE	CONTROL INTERFACE: SWITCH INPUT	E:	J:
RATED CAPACITY: 22.5" DIA	NEC AREA CLASS: UNCLASSIFIED		
C/L DRUM FROM C/L PORT (OFF CEN. TOL.): <.197"	DRUM/PORT SEALING PRESSURE: 20 PSI		
CONSTRUCTION			
DRUM INTERFACE: 55 GAL OVERPACK, 22.5" DIA RUBBER	EMERGENCY CLOSING: REQUIRED		
TYPE OF CONTROL: REMOTE	LIMIT SWITCHES: ELECTRICAL @LID, LOCK, OPEN/CLOSE		
CELL LID/CROSS LID LIFT: PNEUMATIC VERTICAL W/LINKAGE	ACTUATION: PNEUMATIC		
CELL LID/CROSS LID MOVE: DIRECT PNEUMATIC HORIZONTAL	EMERGENCY CONTROLS: REQUIRED		
CELL LID/CROSS LID LOCKS: MAGNET/LINKAGE/PNEUMATIC	CELL LID: SELF ALIGNING		
LID STOPS: HARD	CONTROL PANEL: REMOTE		
MOUNTING BASE PLATE: .75"			
MATERIAL: 304 SS, 400 SERIES OTHERS			

9413227.0253

UNITED ENGINEERS & CONSTRUCTORS A Raytheon Company Western Operations	EQUIPMENT DATA SHEET ☒ CDR ☐ TITLE I ☐ TITLE II ☐ TITLE III	ITEM NUMBER DO-05-562	PAGE 1 OF 1

CUSTOMER & LOCATION	PROJECT	UE&C JOB NO. 6237.006	DATE: 05/14/92
DOE-RL/WHC HANFORD, WA	WRAP FACILITY MODULE 2A	ACCOUNT NO.	BY: SAS

REVISIONS (DATE & BY)	A		B		C		D	
	E		F		G		H	

SERVICE	MANUFACTURER	NO. REQ'D.	SOURCE OF QUOTE
SIMPLE DOUBLE LID DOOR		1	

SIMPLE DOUBLE LIDDED DOOR

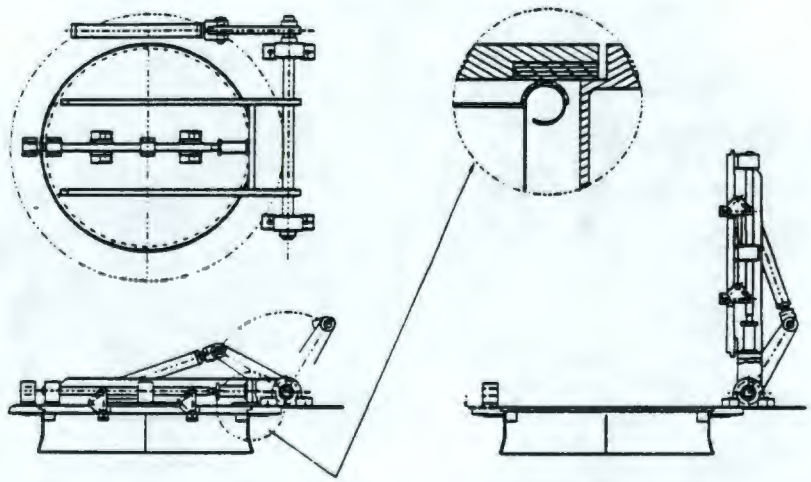

CONDITIONS OF SERVICE		DIMENSIONS	
APPLICATION: CONTAINMENT SYSTEM ALLOWING REMOVAL OF WASTE INTO 55 GAL DRUMS INSIDE OVERPACKS		A:	F:
UNIT LOAD DESCRIPTION: 85 GAL WASTE DRUM OVERPACK DRUMS CONTAINING 55 GALLON DRUMS		B:	G:
UNIT LOAD SIZE: 26" DIA X 39" HIGH	DUTY: 8 HOURS/DAY	C:	H:
UNIT LOAD WEIGHT: 1,000 LBS	AVAILABLE POWER: 480/3/60 AND 90 PSI AIR	D:	I:
LOCATION:	CONTROL INTERFACE: SWITCH INPUT	E:	J:
RATED CAPACITY: 26" DIA	NEC AREA CLASS: UNCLASSIFIED		
C/L DRUM FROM C/L PORT (OFF CEN. TOL.): < .197"	DRUM/PORT SEALING PRESSURE: 20 PSI		
CONSTRUCTION			
DRUM INTERFACE: 85 GAL OVERPACK, 26" DIA RUBBER	EMERGENCY CLOSING: REQUIRED		
TYPE OF CONTROL: REMOTE	LIMIT SWITCHES: ELECTRICAL @ LID, LOCK, OPEN/CLOSE		
CELL LID/DRUM LID LIFT: PNEUMATIC VERTICAL W/LINKAGE	ACTUATION: PNEUMATIC		
DRUM LID MOVE: DIRECT PNEUMATIC HORIZONTAL	EMERGENCY CONTROLS: REQUIRED		
DRUM LID LOCKS: MAGNET/LINKGE/PNEUMATIC	CELL LID: SELF ALIGNING		
LID STOPS: HARD	CONTROL PANEL: REMOTE		
MOUNTING BASE PLATE: .75"			
MATERIAL: 400 SERIES OTHERS			

UNITED ENGINEERS & CONSTRUCTORS A Raytheon Company Western Operations	EQUIPMENT DATA SHEET ☒ CDR ☐ TITLE I ☐ TITLE II ☐ TITLE III	ITEM NUMBER DO-05-524A,B	PAGE 1 OF 1

CUSTOMER & LOCATION	PROJECT	UE&C JOB NO. 6237.006	DATE: 06/12/92
DOE-RL/WHC HANFORD, WA	WRAP FACILITY MODULE 2A	ACCOUNT NO.	BY: SAS

REVISIONS (DATE & BY)	A		B		C		D	
	E		F		G		H	

SERVICE	MANUFACTURER	NO. REQ'D.	SOURCE OF QUOTE
SLIDING DOUBLE LID DOOR		2	

SLIDING DOUBLE LID DOOR

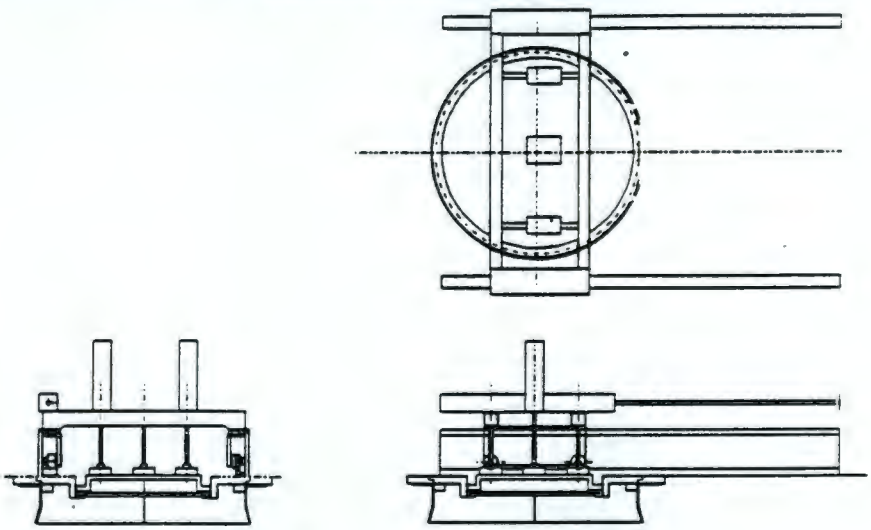

CONDITIONS OF SERVICE		DIMENSIONS	
APPLICATION: CONTAINMENT SYSTEM ALLOWING CLOSING & SEALING OF 55 GAL WASTE DRUMS W/O BREACH		A:	F:
UNIT LOAD DESCRIPTION: 55 GAL WASTE DRUM AND LID		B:	G:
UNIT LOAD SIZE: 22.5" DIA X 39.5" HIGH	DUTY: 8 HOURS/DAY	C:	H:
UNIT LOAD WEIGHT: 1,000 LBS	AVAILABLE POWER: 480/3/60 AND 90 PSI AIR	D:	I:
LOCATION: SHREDDER & REPACK ENCLOSURE	CONTROL INTERFACE: SWITCH INPUT	E:	J:
RATED CAPACITY: 22.5" DIA	NEC AREA CLASS: UNCLASSIFIED		
C/L DRUM FROM C/L PORT (OFF CEN. TOL.): < .197"	DRUM/PORT SEALING PRESSURE: 20 PSI		
CONSTRUCTION			
DRUM INTERFACE: 55 GAL OVERPACK, 22.5" DIA RUBBER	EMERGENCY CLOSING: REQUIRED		
TYPE OF CONTROL: REMOTE	LIMIT SWITCHES: ELECTRICAL @ LID, LOCK, OPEN/CLOSE		
DRUM LID LIFT: DIRECT PNEUMATIC VERTICAL	ACTUATION: PNEUMATIC		
DRUM LID MOVE: DIRECT PNEUMATIC HORIZONTAL	EMERGENCY CONTROLS: REQUIRED		
DRUM LID LOCKS: MAGNET/LINKAGE/PNEUMATIC PIN	CELL LID: SELF ALIGNING		
LID STOPS: HARD	CONTROL PANEL: REMOTE		
MOUNTING BASE PLATE: .75"	CROSS LID SEAL: HYDRAULIC SWAGE/ONE TIME 4 PL		
MATERIAL: 304 SS, 400 SERIES OTHERS			

9413227.0255

UNITED ENGINEERS & CONSTRUCTORS A Raytheon Company Western Operations	EQUIPMENT DATA SHEET ☒ CDR ☐ TITLE I ☐ TITLE II ☐ TITLE III	ITEM NUMBER DO-05-544	PAGE 1 OF 1

CUSTOMER & LOCATION	PROJECT	UE&C JOB NO. 6237.006	DATE: 05/13/92
DOE-RL/WHC HANFORD, WA	WRAP FACILITY MODULE 2A	ACCOUNT NO. 1	BY: SAS

REVISIONS (DATE & BY)	A		B		C		D	
	E		F		G		H	

SERVICE	MANUFACTURER	NO. REQ'D.	SOURCE OF QUOTE
SIDING DOUBLE LID DOOR		1	

SLIDING DOUBLE LIDDED DOOR SYSTEM

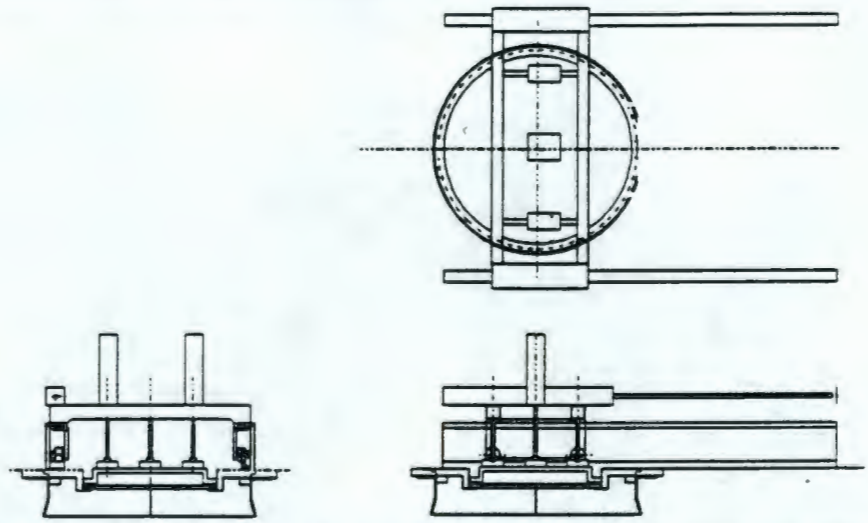

CONDITIONS OF SERVICE		DIMENSIONS	
APPLICATION: CONTAINMENT SYSTEM ALLOWING CLOSING & SEALING OF 55 GAL WASTE DRUMS W/O BREACH		A:	F:
UNIT LOAD DESCRIPTION: 55 GALLON WASTE DRUM AND LID		B:	G:
UNIT LOAD SIZE: 22.5" DIA X 34.5" HIGH	DUTY: 8 HRS/DAY	C:	H:
UNIT LOAD WEIGHT: 1,000 LBS	AVAILABLE POWER: 480/3/60 & 90 PSI AIR	D:	I:
LOCATION: PUG MILL ENCLOSURE	CONTROL INTERFACE: SWITCH INPUT	E:	J:
RATED CAPACITY: 22.5" DIA	NEC AREA CLASS: UNCLASSIFIED		
C/L DRUM FROM C/L PORT (OFF CEN. TOL.): <.197"	DRUM/PORT SEALING PRESSURE: 20 PSI		
CONSTRUCTION			
DRUM INTERFACE: 55 GAL OVERPACK, 22.5" DIA RUBBER	EMERGENCY CLOSING: REQUIRED		
TYPE OF CONTROL: REMOTE	LIMIT SWITCHES: ELECTRICAL @LID, LOCK, OPEN/CLOSE		
DRUM LID LIFT: DIRECT PNEUMATIC VERTICAL	ACTUATION: PNEUMATIC		
DRUM LID MOVE: DIRECT PNEUMATIC HORIZONTAL	EMERGENCY CONTROLS: REQUIRED		
DRUM LID LOCKS: MAGNET/LINKAGE/PNEUMATIC PIN	CELL LID: SELF ALIGNING		
LID STOPS: HARD	CONTROL PANEL: REMOTE		
MOUNTING BASE PLATE: .75"	CROSS LID SEAL: HYDRAULIC SWAGS/ONETIME 4 PI		
MATERIAL: 304 SS, 400 SERIES OTHERS			

9413227.0256

UNITED ENGINEERS & CONSTRUCTORS A Raytheon Company Western Operations	EQUIPMENT DATA SHEET ☒ CDR ☐ TITLE I ☐ TITLE II ☐ TITLE III	ITEM NUMBER DO-06-101	PAGE 1 OF 1

CUSTOMER & LOCATION	PROJECT	UE&C JOB NO.	DATE: 05/13/92
DOE-RL/WHC HANFORD, WA	WRAP FACILITY MODULE 2A	6237.006	
		ACCOUNT NO.	BY: GBD

REVISIONS (DATE & BY)	A		B		C		D	
	E		F		G		H	

SERVICE	MANUFACTURER	NO. REQ'D.	SOURCE OF QUOTE
MERCURY/LEAD GLOVEBOX CONTAINMENT		1	

SIMPLE DOUBLE LIDDED DOOR

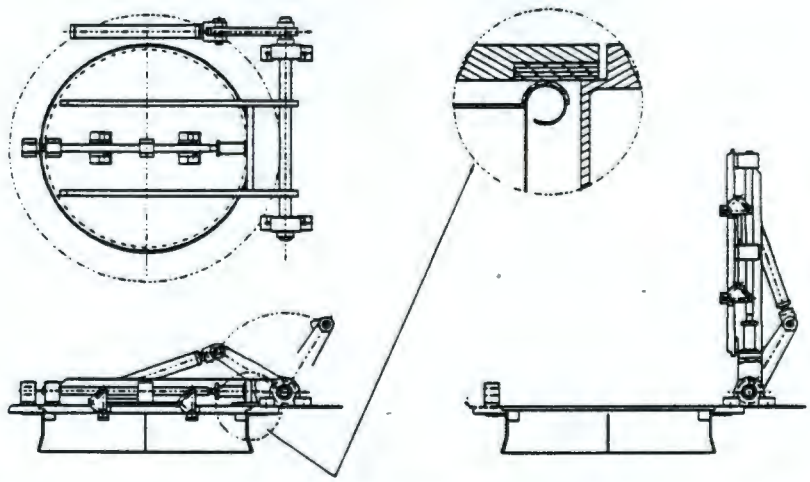

CONDITIONS OF SERVICE		DIMENSIONS	
APPLICATION: CONTAINMENT SYSTEM ALLOWING INTRODUCTION OF 55 AND 85 GAL WASTE DRUMS W/O BREACH		A:	F:
UNIT LOAD DESCRIPTION: 55 GAL WASTE DRUM AND LID		B:	G:
UNIT LOAD SIZE: 26" DIA X 39" HIGH	DUTY: 8 HOURS/DAY	C:	H:
UNIT LOAD WEIGHT: 3,000 LBS	AVAILABLE POWER: 480/3/60 AND 90 PSI AIR	D:	I:
LOCATION: SPECIAL WASTE ENTRY	CONTROL INTERFACE: SWITCH INPUT	E:	J:
RATED CAPACITY: 26" DIA	NEC AREA CLASS: UNCLASSIFIED		
C/L DRUM FROM C/L PORT (OFF CEN. TOL.): < .197"	DRUM/PORT SEALING PRESSURE: 20 PSI		
CONSTRUCTION			
DRUM INTERFACE: 55 GAL WASTE DRUM, 26" DIA RUBBER	EMERGENCY CLOSING: REQUIRED		
TYPE OF CONTROL: REMOTE	LIMIT SWITCHES: ELECTRICAL @ LID, LOCK, OPEN/CLOSE		
CELL LID/DRUM LID LIFT: PNEUMATIC VERTICAL W/LINKAGE	ACTUATION: PNEUMATIC		
DRUM LID MOVE: DIRECT PNEUMATIC HORIZONTAL	EMERGENCY CONTROLS: REQUIRED		
DRUM LID LOCKS: MAGNET/LINKAGE/PNEUMATIC	CELL LID: SELF ALIGNING		
LID STOPS: HARD	CONTROL PANEL: REMOTE		
MOUNTING BASE PLATE: .75"			
MATERIAL: 304 SS, 400 SERIES OTHERS			

9413227.0257

UNITED ENGINEERS & CONSTRUCTORS A Raytheon Company Western Operations	EQUIPMENT DATA SHEET ☒ CDR ☐ TITLE I ☐ TITLE II ☐ TITLE III	ITEM NUMBER DO-06-102	PAGE 1 OF 1

CUSTOMER & LOCATION	PROJECT	UE&C JOB NO. 6237.006	DATE: 05/13/92
DOE-RL/WHC HANFORD, WA	WRAP FACILITY MODULE 2A	ACCOUNT NO.	BY: GBD

REVISIONS (DATE & BY)	A		B		C		D	
	E		F		G		H	

SERVICE	MANUFACTURER	NO. REQ'D.	SOURCE OF QUOTE
SPECIAL WASTE GLOVEBOX CONTAINMENT		1	

SLIDING DOUBLE LID DOOR

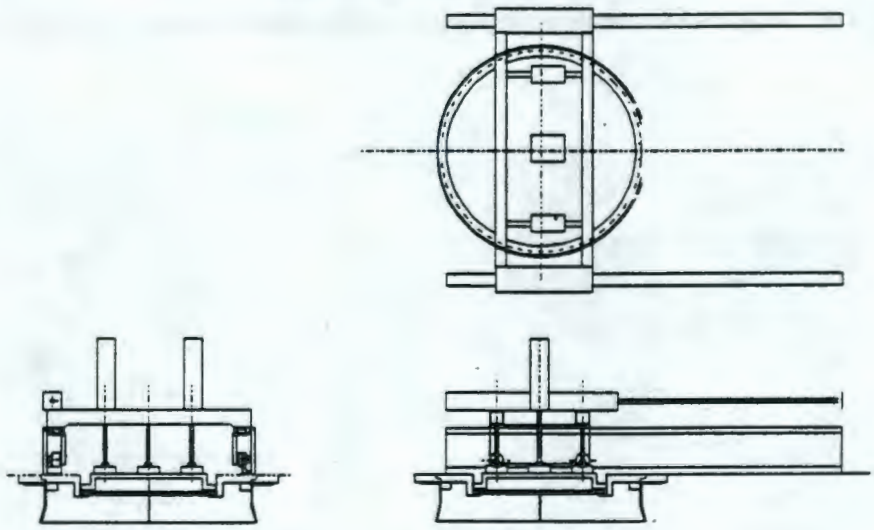

CONDITIONS OF SERVICE		DIMENSIONS	
APPLICATION: CONTAINMENT SYSTEM ALLOWING CLOSING & SEALING OF 55 GAL WASTE DRUMS W/O BREACH		A:	F:
UNIT LOAD DESCRIPTION: 55 GAL WASTE DRUM AND LID		B:	G:
UNIT LOAD SIZE: 22.5" DIA X 34.5" HIGH	DUTY: 8 HOURS/DAY	C:	H:
UNIT LOAD WEIGHT: 1,100 LBS	AVAILABLE POWER: 480/3/60 AND 90 PSI AIR	D:	I:
LOCATION: DRUM FILLING-LEAD	CONTROL INTERFACE: SWITCH INPUT	E:	J:
RATED CAPACITY: 22.5" DIA	NEC AREA CLASS: UNCLASSIFIED		
C/L DRUM FROM C/L PORT (OFF CEN. TOL.): < .197"	DRUM/PORT SEALING PRESSURE: 20 PSI		
CONSTRUCTION			
DRUM INTERFACE: 55 GAL OVERPACK, 22.5" DIA RUBBER	EMERGENCY CLOSING: REQUIRED		
TYPE OF CONTROL: REMOTE	LIMIT SWITCHES: ELECTRICAL @ LID, LOCK, OPEN/CLOSE		
DRUM LID LIFT: DIRECT PNEUMATIC VERTICAL	ACTUATION: PNEUMATIC		
DRUM LID MOVE: DIRECT PNEUMATIC HORIZONTAL	EMERGENCY CONTROLS: REQUIRED		
DRUM LID LOCKS: MAGNET/LINKAGE/PNEUMATIC PIN	CELL LID: SELF ALIGNING		
LID STOPS: HARD	CONTROL PANEL: REMOTE		
MOUNTING BASE PLATE: .75"	CROSS LID SEAL: HYDRAULIC SWAGS/ONE TIME 4 PL		
MATERIAL: 304 SS, 400 SERIES OTHERS			

UNITED ENGINEERS & CONSTRUCTORS A Raytheon Company Western Operations	EQUIPMENT DATA SHEET ☒ CDR ☐ TITLE I ☐ TITLE II ☐ TITLE III	ITEM NUMBER DO-06-103	PAGE 1 OF 1

CUSTOMER & LOCATION	PROJECT	UE&C JOB NO. 6237.006	DATE: 05/13/92
DOE-RL/WHC HANFORD, WA	WRAP FACILITY MODULE 2A	ACCOUNT NO.	BY: GBD

REVISIONS (DATE & BY)	A		B		C		D	
	E		F		G		H	

SERVICE	MANUFACTURER	NO. REQ'D.	SOURCE OF QUOTE
MERCURY/LEAD GLOVEBOX CONTAINMENT		1	

SLIDING HATCH

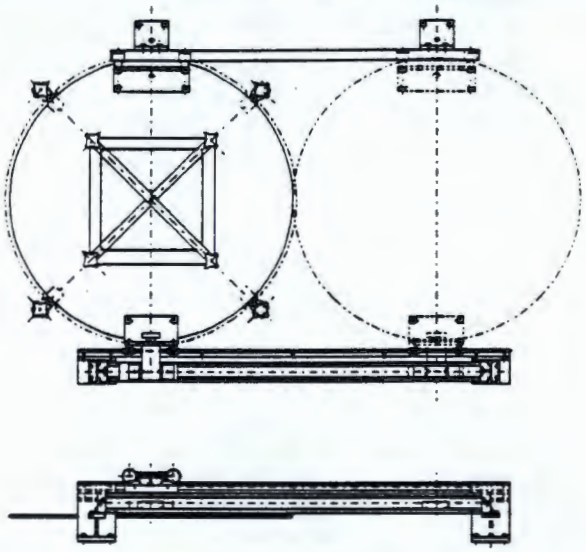

CONDITIONS OF SERVICE		DIMENSIONS	
APPLICATION: CONTAINMENT SYSTEM ALLOWING INTRODUCTION OF LLRMW WASTE W/O BREACH		A:	F:
UNIT LOAD DESCRIPTION: 55 AND 85 GALLON DRUMS		B:	G:
UNIT LOAD SIZE: 26" DIA X 39" HIGH	DUTY: 8 HRS/DAY	C:	H:
UNIT LOAD WEIGHT: 3,000 LBS	AVAILABLE POWER: 480/3/60 & 90 PSI AIR	D:	I:
LOCATION: DRUM INLET	CONTROL INTERFACE: SWITCH INPUT	E:	J:
RATED CAPACITY: 26.5" DIA	NEC AREA CLASS: UNCLASSIFIED		
C/L DRUM FROM C/L PORT (OFF CEN. TOL.): <.197"	DRUM/PORT SEALING PRESSURE: 20 PSI		
CONSTRUCTION			
DRUM INTERFACE: 55 GALLON WITH CROSS LID	EMERGENCY CLOSING: REQUIRED		
TYPE OF CONTROL: REMOTE	LIMIT SWITCHES: ELECTRICAL @LID, LOCK, OPEN/CLOSE		
CELL LID/CROSS LID LIFT: PNEUMATIC SWING	ACTUATION: PNEUMATIC		
CELL LID/CROSS LID MOVE: DIRECT PNEUMATIC HORIZONTAL	EMERGENCY CONTROLS: REQUIRED		
CELL LID/CROSS LID LOCKS: OVER CENTER HOOK LINES	CELL LID: SELF ALIGNING		
LID STOPS: OVER CENTER CLOVE HOOKS	CONTROL PANEL: REMOTE		
MOUNTING BASE PLATE: .75"			
MATERIAL: 304-SS, 400 SERIES OTHERS			

9413227.0259

UNITED ENGINEERS & CONSTRUCTORS A Raytheon Company Western Operations	EQUIPMENT DATA SHEET ☒ CDR ☐ TITLE I ☐ TITLE II ☐ TITLE III	ITEM NUMBER DO-06-201	PAGE 1 OF 1

CUSTOMER & LOCATION	PROJECT	UE&C JOB NO. 6237.006	DATE: 05/13/92
DOE-RL/WHC HANFORD, WA	WRAP FACILITY MODULE 2A	ACCOUNT NO.	BY: GBD

REVISIONS (DATE & BY)	A		B		C		D	
	E		F		G		H	

SERVICE	MANUFACTURER	NO. REQ'D.	SOURCE OF QUOTE
SPECIAL WASTE GLOVEBOX CONTAINMENT		1	

SLIDING DOUBLE LID DOOR

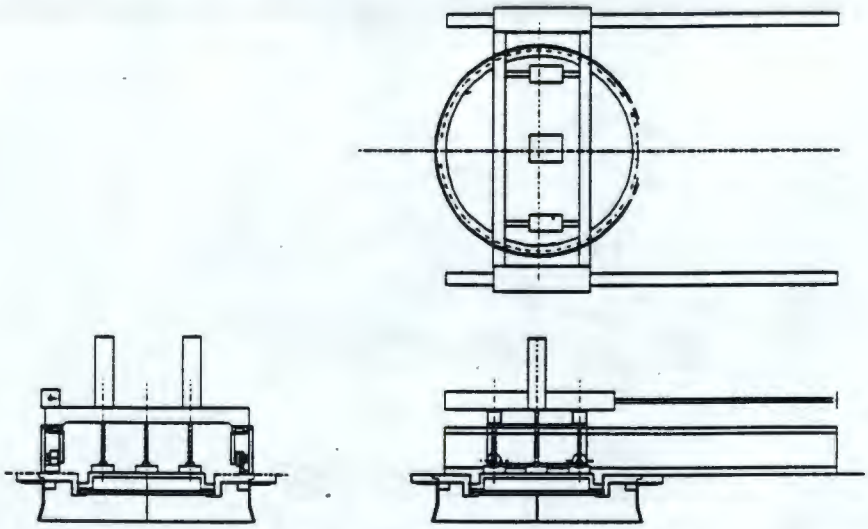

CONDITIONS OF SERVICE		DIMENSIONS	
APPLICATION: CONTAINMENT SYSTEM ALLOWING CLOSING & SEALING OF 55 GAL WASTE DRUMS W/O BREACH		A:	F:
UNIT LOAD DESCRIPTION: 55 GAL WASTE DRUM AND LID		B:	G:
UNIT LOAD SIZE: 22.5" DIA X 34.5" HIGH	DUTY: 8 HOURS/DAY	C:	H:
UNIT LOAD WEIGHT: 1,000 LBS	AVAILABLE POWER: 480/3/60 AND 90 PSI AIR	D:	I:
LOCATION: DRUM FILLING-MERCURY	CONTROL INTERFACE: SWITCH INPUT	E:	J:
RATED CAPACITY: 22.5" DIA	NEC AREA CLASS: UNCLASSIFIED		
C/L DRUM FROM C/L PORT (OFF CEN. TOL.): < .197"	DRUM/PORT SEALING PRESSURE: 20 PSI		
CONSTRUCTION			
DRUM INTERFACE: 55 GAL OVERPACK, 22.5" DIA RUBBER	EMERGENCY CLOSING: REQUIRED		
TYPE OF CONTROL: REMOTE	LIMIT SWITCHES: ELECTRICAL @ LID, LOCK, OPEN/CLOSE		
DRUM LID LIFT: DIRECT PNEUMATIC VERTICAL	ACTUATION: PNEUMATIC		
DRUM LID MOVE: DIRECT PNEUMATIC HORIZONTAL	EMERGENCY CONTROLS: REQUIRED		
DRUM LID LOCKS: MAGNET/LINKAGE/PNEUMATIC PIN	CELL LID: SELF ALIGNING		
LID STOPS: HARD	CONTROL PANEL: REMOTE		
MOUNTING BASE PLATE: .75"	CROSS LID SEAL: HYDRAULIC SWAGE/ONE TIME 4 PL		
MATERIAL: 304 SS, 400 SERIES OTHERS			

UNITED ENGINEERS & CONSTRUCTORS A Raytheon Company Western Operations	EQUIPMENT DATA SHEET ☒ CDR ☐ TITLE I ☐ TITLE II ☐ TITLE III	ITEM NUMBER DO-06-202	PAGE 1 OF 1

CUSTOMER & LOCATION	PROJECT	UE&C JOB NO. 6237.006	DATE: 05/13/92
DOE-RL/WHC HANFORD, WA	WRAP FACILITY MODULE 2A	ACCOUNT NO.	BY: GBD

REVISIONS (DATE & BY)	A		B		C		D	
	E		F		G		H	

SERVICE	MANUFACTURER	NO. REQ'D.	SOURCE OF QUOTE
MERCURY EVAPORATOR GLOVEBOX CONTAIN		1	

SLIDING HATCH

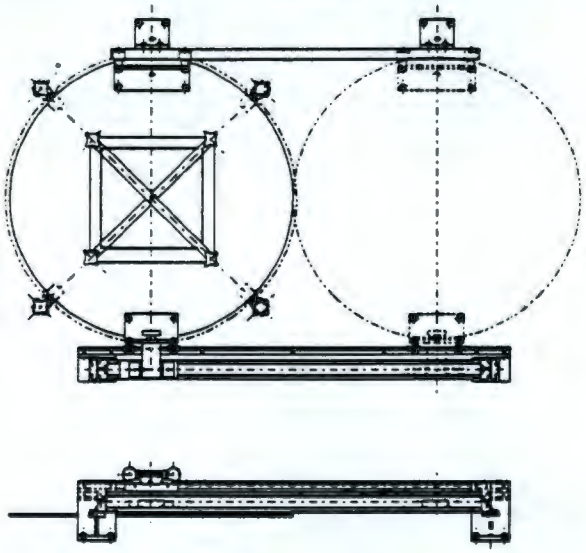

CONDITIONS OF SERVICE		DIMENSIONS	
APPLICATION: CONTAINMENT SYSTEM ALLOWING INTRODUCTION OF MERCURY CONTAMINATED WASTE W/O BREACH		A:	F:
UNIT LOAD DESCRIPTION: SHREDDER BIN-DISCHARGE		B:	G:
UNIT LOAD SIZE: 12" DIA	DUTY: 8 HRS/DAY	C:	H:
UNIT LOAD WEIGHT: 3,000 LBS	AVAILABLE POWER: 480/3/60 & 90 PSI AIR	D:	I:
LOCATION: EVAPORATOR FILL	CONTROL INTERFACE: SWITCH INPUT	E:	J:
RATED CAPACITY: 26.5" DIA	NEC AREA CLASS: UNCLASSIFIED		
C/L DRUM FROM C/L PORT (OFF CEN. TOL.): <.197"	DRUM/PORT SEALING PRESSURE: 20 PSI		
CONSTRUCTION			
DRUM INTERFACE: 55 GALLON WITH CROSS LID	EMERGENCY CLOSING: REQUIRED		
TYPE OF CONTROL: REMOTE	LIMIT SWITCHES: ELECTRICAL @LID, LOCK, OPEN/CLOSE		
CELL LID/CROSS LID LIFT: PNEUMATIC SWING	ACTUATION: PNEUMATIC		
CELL LID/CROSS LID MOVE: DIRECT PNEUMATIC HORIZONTAL	EMERGENCY CONTROLS: REQUIRED		
CELL LID/CROSS LID LOCKS: OVER CENTER HOOK LINES	CELL LID: SELF ALIGNING		
LID STOPS: OVER CENTER CLOVE HOOKS	CONTROL PANEL: REMOTE		
MOUNTING BASE PLATE: .75"			
MATERIAL: 304-SS, 400 SERIES OTHERS			

9413227.0261

UNITED ENGINEERS & CONSTRUCTORS A Raytheon Company Western Operations	EQUIPMENT DATA SHEET ☒ CDR ☐ TITLE I ☐ TITLE II ☐ TITLE III	ITEM NUMBER DO-06-304	PAGE 1 OF 1

CUSTOMER & LOCATION	PROJECT	UE&C JOB NO. 6237.006	DATE: 05/13/92
DOE-RL/WHC HANFORD, WA	WRAP FACILITY MODULE 2A	ACCOUNT NO.	BY: GBD

REVISIONS (DATE & BY)	A		B		C		D	
	E		F		G		H	

SERVICE	MANUFACTURER	NO. REQ'D.	SOURCE OF QUOTE
REACTIVE METALS GLOVEBOX CONTAINMENT		1	

SLIDING HATCH

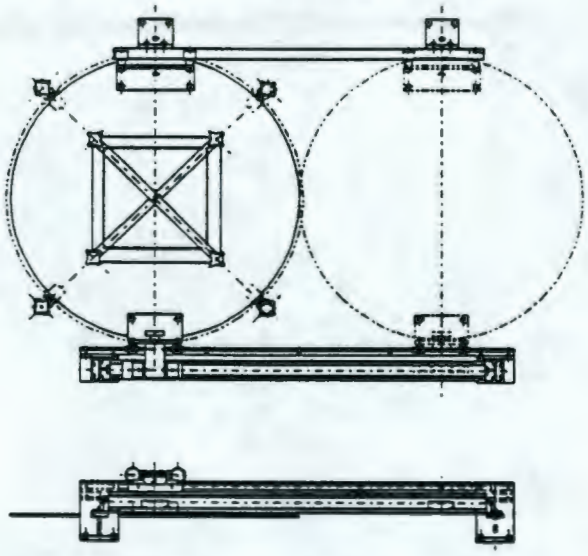

CONDITIONS OF SERVICE		DIMENSIONS	
APPLICATION: CONTAINMENT SYSTEM ALLOWING INTRODUCTION OF LLRMW WASTE W/O BREACH		A:	F:
UNIT LOAD DESCRIPTION: 55 AND 85 GALLON DRUMS		B:	G:
UNIT LOAD SIZE: 26" DIA X 39" HIGH	DUTY: 8 HRS/DAY	C:	H:
UNIT LOAD WEIGHT: 3,000 LBS	AVAILABLE POWER: 480/3/60 & 90 PSI AIR	D:	I:
LOCATION: FEED TO VIBRATING SCREEN	CONTROL INTERFACE: SWITCH INPUT	E:	J:
RATED CAPACITY: 26.5" DIA	NEC AREA CLASS: UNCLASSIFIED		
C/L DRUM FROM C/L PORT (OFF CEN. TOL.): <.197"	DRUM/PORT SEALING PRESSURE: 20 PSI		
CONSTRUCTION			
DRUM INTERFACE: 55 GALLON WITH CROSS LID	EMERGENCY CLOSING: REQUIRED		
TYPE OF CONTROL: REMOTE	LIMIT SWITCHES: ELECTRICAL @LID, LOCK, OPEN/CLOSE		
CELL LID/CROSS LID LIFT: PNEUMATIC SWING	ACTUATION: PNEUMATIC		
CELL LID/CROSS LID MOVE: DIRECT PNEUMATIC HORIZONTAL	EMERGENCY CONTROLS: REQUIRED		
CELL LID/CROSS LID LOCKS: OVER CENTER HOOK LINES	CELL LID: SELF ALIGNING		
LID STOPS: OVER CENTER CLOVE HOOKS	CONTROL PANEL: REMOTE		
MOUNTING BASE PLATE: .75"			
MATERIAL: 304-SS, 400 SERIES OTHERS			

9413227.0262

UNITED ENGINEERS & CONSTRUCTORS A Raytheon Company Western Operations	EQUIPMENT DATA SHEET ☒ CDR ☐ TITLE I ☐ TITLE II ☐ TITLE III	ITEM NUMBER DO-06-305	PAGE 1 OF 1

CUSTOMER & LOCATION	PROJECT	UE&C JOB NO. 6237.006	DATE: 05/13/92
DOE-RL/WHC HANFORD, WA	WRAP FACILITY MODULE 2A	ACCOUNT NO.	BY: GBD

REVISIONS (DATE & BY)	A		B		C		D	
	E		F		G		H	

SERVICE	MANUFACTURER	NO. REQ'D.	SOURCE OF QUOTE
REACTIVE METALS GLOVEBOX CONTAINMENT		1	

SLIDING HATCH

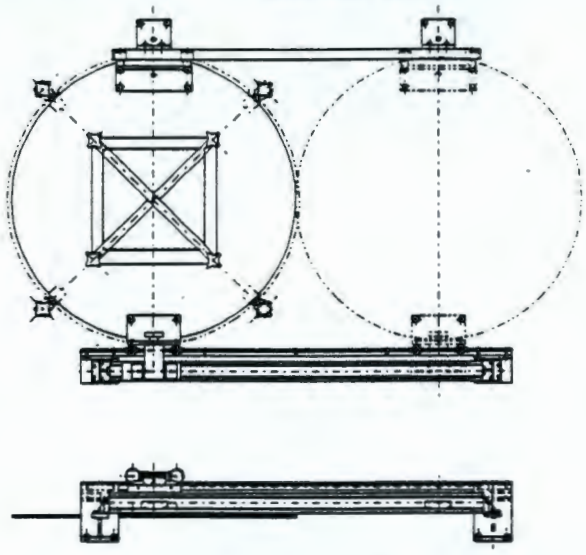

CONDITIONS OF SERVICE		DIMENSIONS	
APPLICATION: CONTAINMENT SYSTEM ALLOWING INTRODUCTION OF LLRMW WASTE W/O BREACH		A:	F:
UNIT LOAD DESCRIPTION: 55 AND 85 GALLON DRUMS		B:	G:
UNIT LOAD SIZE: 26" DIA X 39" HIGH	DUTY: 8 HRS/DAY	C:	H:
UNIT LOAD WEIGHT: 3,000 LBS	AVAILABLE POWER: 480/3/60 & 90 PSI AIR	D:	I:
LOCATION: VIBRATING CONVEYOR DISCHARGE	CONTROL INTERFACE: SWITCH INPUT	E:	J:
RATED CAPACITY: 26.5" DIA	NEC AREA CLASS: UNCLASSIFIED		
C/L DRUM FROM C/L PORT (OFF CEN. TOL.): <.197"	DRUM/PORT SEALING PRESSURE: 20 PSI		
CONSTRUCTION			
DRUM INTERFACE: 55 GALLON WITH CROSS LID	EMERGENCY CLOSING: REQUIRED		
TYPE OF CONTROL: REMOTE	LIMIT SWITCHES: ELECTRICAL @LID, LOCK, OPEN/CLOSE		
CELL LID/CROSS LID LIFT: PNEUMATIC SWING	ACTUATION: PNEUMATIC		
CELL LID/CROSS LID MOVE: DIRECT PNEUMATIC HORIZONTAL	EMERGENCY CONTROLS: REQUIRED		
CELL LID/CROSS LID LOCKS: OVER CENTER HOOK LINES	CELL LID: SELF ALIGNING		
LID STOPS: OVER CENTER CLOVE HOOKS	CONTROL PANEL: REMOTE		
MOUNTING BASE PLATE: .75"			
MATERIAL: 304-SS, 400 SERIES OTHERS			

9413227.0263

UNITED ENGINEERS & CONSTRUCTORS A Raytheon Company Western Operations	EQUIPMENT DATA SHEET ☒ CDR ☐ TITLE I ☐ TITLE II ☐ TITLE III	ITEM NUMBER DO-05-620	PAGE 1 OF 1

CUSTOMER & LOCATION	PROJECT	UE&C JOB NO. 6237.006	DATE: 06/03/92
DOE-RL/WHC HANFORD, WA	WRAP FACILITY MODULE 2A	ACCOUNT NO.	BY: VAW

REVISIONS (DATE & BY)	A		B		C		D	
	E		F		G		H	

SERVICE CONSUMABLE ENTRY	MANUFACTURER	NO. REQ'D. 1	SOURCE OF QUOTE

SPHINCTER PORT

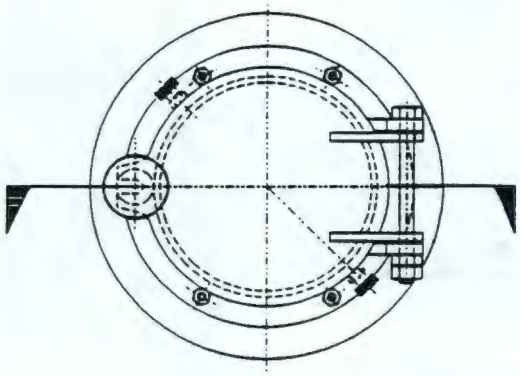

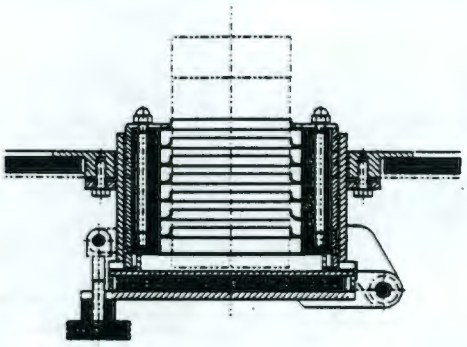

%%uSECTION

CONDITIONS OF SERVICE		DIMENSIONS	
APPLICATION: CONTAINMENT SYSTEM ALLOWING THE INTRODUCTION CONSUMABLE CONTAINERS		A:	F:
UNIT LOAD DESCRIPTION: 2 EACH CONSUMABLE CONTAINERS		B:	G:
UNIT LOAD SIZE: 6.5" DIA	DUTY: 8 HRS/DAY	C:	H:
UNIT LOAD WEIGHT: 10 LBS	AVAILABLE POWER:	D:	I:
LOCATION: INSIDE SAMPLE ENCLOSURE	CONTROL INTERFACE: MANUAL	E:	J:
RATED CAPACITY: 1 LITER	NEC AREA CLASS: UNCLASSIFIED		
C/L DRUM FROM C/L PORT (OFF CEN. TOL.): <.197"			
CONSTRUCTION			

UNITED ENGINEERS & CONSTRUCTORS A Raytheon Company Western Operations	EQUIPMENT DATA SHEET ☒ CDR ☐ TITLE I ☐ TITLE II ☐ TITLE III	ITEM NUMBER DO-05-622	PAGE 1 OF 1

CUSTOMER & LOCATION	PROJECT	UE&C JOB NO. 6237.006	DATE: 05/21/92
DOE-RL/WHC HANFORD, WA	WRAP FACILITY MODULE 2A	ACCOUNT NO.	BY: VAW

REVISIONS (DATE & BY)	A		B		C		D	
	E		F		G		H	

SERVICE	MANUFACTURER	NO. REQ'D.	SOURCE OF QUOTE
SIMPLE DOUBLE LID DOOR		1	

SIMPLE DOUBLE LIDDED DOOR

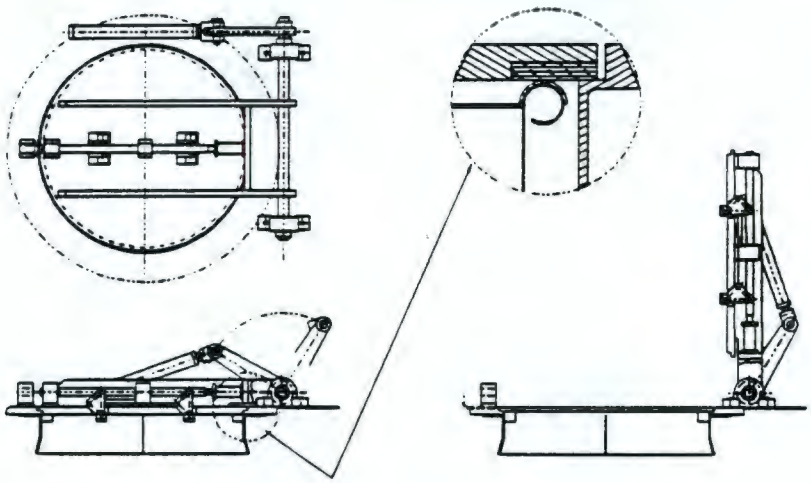

CONDITIONS OF SERVICE		DIMENSIONS	
APPLICATION: CONTAINMENT SYSTEM ALLOWING REMOVAL OF WASTE INTO 55 GAL DRUMS INSIDE OVERPACKS		A:	F:
UNIT LOAD DESCRIPTION: 85 GAL WASTE DRUM OVERPACK DRUMS CONTAINING 55 GALLON DRUMS		B:	G:
UNIT LOAD SIZE: 26" DIA X 39" HIGH	DUTY: 8 HOURS/DAY	C:	H:
UNIT LOAD WEIGHT: 3,000 LBS	AVAILABLE POWER: 480/3/60 AND 90 PSI AIR	D:	I:
LOCATION:	CONTROL INTERFACE: SWITCH INPUT	E:	J:
RATED CAPACITY: 26" DIA	NEC AREA CLASS: UNCLASSIFIED		
C/L DRUM FROM C/L PORT (OFF CEN. TOL.): < .197"	DRUM/PORT SEALING PRESSURE: 20 PSI		
CONSTRUCTION			
DRUM INTERFACE: 85 GAL OVERPACK, 26" DIA RUBBER	EMERGENCY CLOSING: REQUIRED		
TYPE OF CONTROL: REMOTE	LIMIT SWITCHES: ELECTRICAL @ LID, LOCK, OPEN/CLOSE		
CELL LID/DRUM LID LIFT: PNEUMATIC VERTICAL W/LINKAGE	ACTUATION: PNEUMATIC		
DRUM LID MOVE: DIRECT PNEUMATIC HORIZONTAL	EMERGENCY CONTROLS: REQUIRED		
DRUM LID LOCKS: MAGNET/LINKAGE/PNEUMATIC	CELL LID: SELF ALIGNING		
LID STOPS: HARD	CONTROL PANEL: REMOTE		
MOUNTING BASE PLATE: .75"			
MATERIAL: 400 SERIES OTHERS			

9413227.0265

UNITED ENGINEERS & CONSTRUCTORS A Raytheon Company Western Operations	EQUIPMENT DATA SHEET ☒ CDR ☐ TITLE I ☐ TITLE II ☐ TITLE III	ITEM NUMBER DO-05-623	PAGE 1 OF 1

CUSTOMER & LOCATION	PROJECT	UE&C JOB NO. 6237.006	DATE: 06/21/92
DOE-RL/WHC HANFORD, WA	WRAP FACILITY MODULE 2A	ACCOUNT NO.	BY: VAW

REVISIONS (DATE & BY)	A		B		C		D	
	E		F		G		H	

SERVICE	MANUFACTURER	NO. REQ'D.	SOURCE OF QUOTE
SIMPLE DOUBLE LID DOOR		1	

SIMPLE DOUBLE LIDDED DOOR

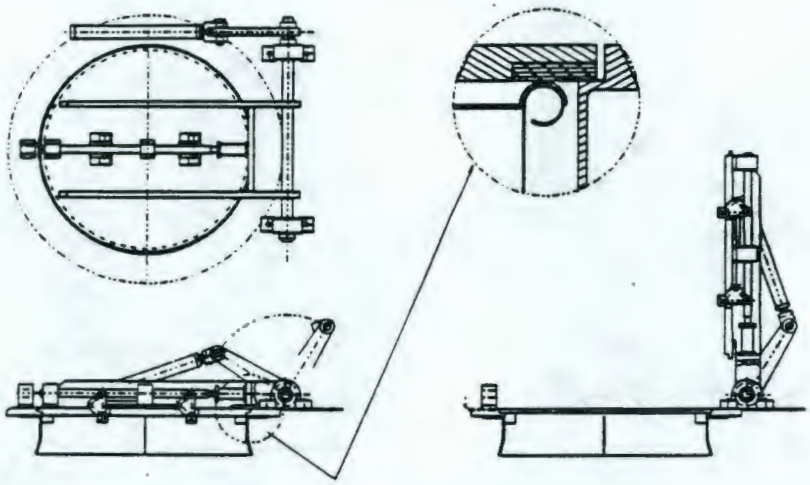

CONDITIONS OF SERVICE		DIMENSIONS	
APPLICATION: CONTAINMENT SYSTEM ALLOWING TRANSFER OF 55 GAL WASTE DRUMS INTO CONTAINMENT		A:	F:
UNIT LOAD DESCRIPTION: 55 GAL WASTE DRUM OVERPACK DRUMS CONTAINING 55 GALLON DRUMS		B:	G:
UNIT LOAD SIZE: 26" DIA X 39" HIGH	DUTY: 8 HOURS/DAY	C:	H:
UNIT LOAD WEIGHT: 3,000 LBS	AVAILABLE POWER: 480/3/60 AND 90 PSI AIR	D:	I:
LOCATION:	CONTROL INTERFACE: SWITCH INPUT	E:	J:
RATED CAPACITY: 26" DIA	NEC AREA CLASS: UNCLASSIFIED		
C/L DRUM FROM C/L PORT (OFF CEN. TOL.): < .197"	DRUM/PORT SEALING PRESSURE: 20 PSI		
CONSTRUCTION			
DRUM INTERFACE: 55 GAL OVERPACK, 26" DIA RUBBER	EMERGENCY CLOSING: REQUIRED		
TYPE OF CONTROL: REMOTE	LIMIT SWITCHES: ELECTRICAL @ LID, LOCK, OPEN/CLOSE		
CELL LID/DRUM LID LIFT: PNEUMATIC VERTICAL W/LINKAGE	ACTUATION: PNEUMATIC		
DRUM LID MOVE: DIRECT PNEUMATIC HORIZONTAL	EMERGENCY CONTROLS: REQUIRED		
DRUM LID LOCKS: MAGNET/LINKAGE/PNEUMATIC	CELL LID: SELF ALIGNING		
LID STOPS: HARD	CONTROL PANEL: REMOTE		
MOUNTING BASE PLATE: .75"			
MATERIAL: 400 SERIES OTHERS			

SECTION 13251

9413227.0267

THIS PAGE INTENTIONALLY
LEFT BLANK

WRAP MODULE 2A

SPECIFICATION SECTION
FOR
13251 PURGED PORTS

TABLE OF CONTENTS

PART 1 GENERAL

1.01 SECTION SCOPE
1.02 RELATED SECTIONS
1.03 REFERENCES
1.04 SYSTEM DESCRIPTION
1.05 SUBMITTALS
1.06 DELIVERY, STORAGE AND HANDLING
1.07 SITE CONDITIONS

PART 2 PRODUCTS

2.01 MANUFACTURERS
2.02 MATERIALS
2.03 EQUIPMENT
2.04 COMPONENTS
2.05 FABRICATION
2.06 SHOP QUALITY CONTROL

PART 3 EXECUTION

3.01 PREPARATION
3.02 ERECTION, INSTALLATION AND APPLICATION
3.03 FIELD QUALITY CONTROL
3.04 ADJUSTING AND CLEANING
3.05 DEMONSTRATION
3.06 PROTECTION

APPENDIX

APPENDIX A DATA SHEETS

9227.0268

WRAP MODULE 2A

SECTION 13251

PURGED PORTS

PART 1 GENERAL

1.01 SECTION SCOPE

A. This specification establishes the requirements for detailed design, fabrication, installation, start-up, and acceptance testing of purged port equipment within WRAP 2A.

1.02 RELATED SECTIONS

1.03 REFERENCES

A. Material Specs.

B. American National Standards Institute (ANSI)

C. American Sciety for Testing and Materials (ASTM)

D. National Electric Code (NEC)

E. AWS D1.1 "Structural Welding Code"

F. NEMA MG-1 Motors and Generators

1.04 SYSTEM DESCRIPTION

A. The purged port equipment provides the facility to transfer active samples between process enclosures.

B. <u>General Description</u>

The purged port consists of a sealed container which interfaces with a housing mounted into the side of the process enclosure. Active samples are paned through an apperture in the housing into the container. A double lid door then closes the apperture and the container and samples detached from the enclosure. The sequence is reversed to transfer the sample to the heat enclosure.

9413227.0269

C. **Construction**

The purged port housing is constructed of stainless steel. The purged port container is constructed of aluminium.

D. **Control and Instrumentation**

The purged port is interlocked such that the housing door cannot be opened unless the container is in place or that the container cannot be removed unless the door is in place.

The purged port is operated manually.

E. **Data Sheets**

Equipment Tag Nos. WBS Area Location Numbers and equipment data sheets for this description are provided in **Appendix A.**

END OF SECTION

WRAP MODULE 2A

APPENDIX A

EQUIPMENT/INSTRUMENT DATA SHEETS

WBS LOCATION	EQUIPMENT TAG	SERVICE
1105	DO-05-525 A,B	Purged Port - Shredder and Repack Enclosure
1105	DO-05-545	Purged Port - Pug Mill Enclosure
1105	DO-05-561	Purged Port - Box Breakdown Cell
1105	DO-05-621	Purged Port - Sample Enclosure
1106	DO-06-104	Purged Port - Special Waste Enclosure
1106	DO-06-203	Purged Port - Special Enclosure
1106	DO-06-204	Purged Port - Special Waste Enclosure

9413227.0271

UNITED ENGINEERS & CONSTRUCTORS A Raytheon Company Western Operations	EQUIPMENT DATA SHEET ☒ CDR ☐ TITLE I ☐ TITLE II ☐ TITLE III	ITEM NUMBER DO-05-525	PAGE 1 OF 1

CUSTOMER & LOCATION	PROJECT	UE&C JOB NO. 6237.006	DATE: 05/05/92
DOE-RL/WHC HANFORD, WA	WRAP FACILITY MODULE 2A	ACCOUNT NO. 1105	BY: SAS

REVISIONS (DATE & BY)	A		B		C		D	
	E		F		G		H	

SERVICE	MANUFACTURER	NO. REQ'D.	SOURCE OF QUOTE
LLRMW SAMPLE BAGLESS TRANSFER		2	

SAMPLE BAGLESS TRANSFER PORT

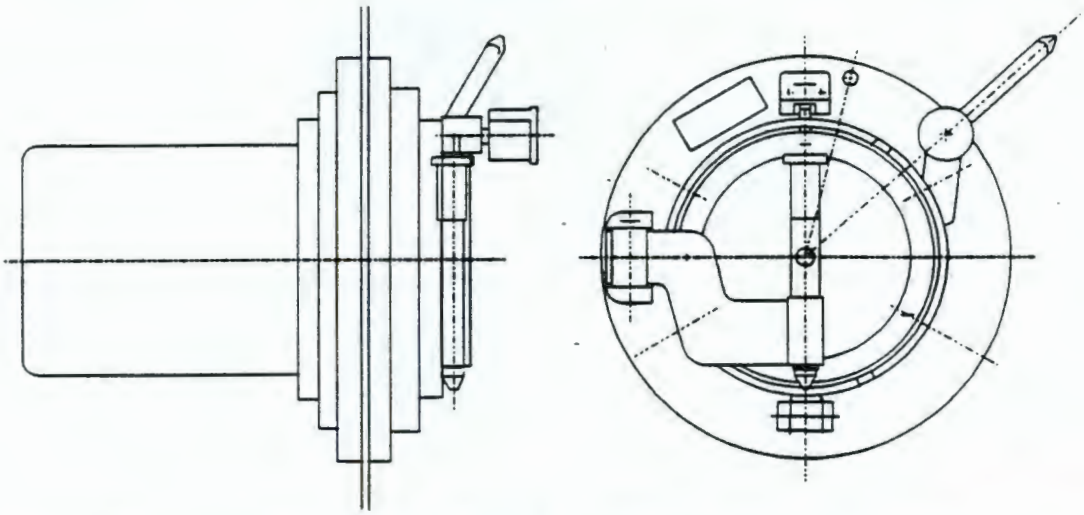

CONDITIONS OF SERVICE		DIMENSIONS	
APPLICATION: CONTAINMENT SYSTEM ALLOWING REMOVAL OF WASTE SAMPLES W/O RELEASING CONTAMINATION		A:	F:
UNIT LOAD DESCRIPTION: WASTE SAMPLES OF LLRMW		B:	G:
UNIT LOAD SIZE: 6.5" DIA X 6" HIGH	DUTY: 8 HRS/DAY	C:	H:
UNIT LOAD WEIGHT: 100 LBS	AVAILABLE POWER: 480/3/60 & 90 PSI AIR	D:	I:
LOCATION: SHREDDING AND REPACK ENCLOSURE	CONTROL INTERFACE: SWITCH INPUT	E:	J:
RATED CAPACITY: 1 LITER	NEC AREA CLASS: UNCLASSIFIED		
C/L DRUM FROM C/L PORT (OFF CEN. TOL.): <.197"			
CONSTRUCTION			
DRUM INTERFACE: BAGLESS/AIR PURGED	EMERGENCY CLOSING: ELASTOMERIC SEAL		
TYPE OF CONTROL: REMOTE	LIMIT SWITCHES: OPEN/CLOSE		
CELL LID/CROSS LID LIFT: LINKAGE	ACTUATION: PNEUMATIC		
CELL LID/CROSS LID MOVE: MECHANICAL	EMERGENCY CONTROLS: REQUIRED		
CELL LID/CROSS LID LOCKS: LINKAGE	CELL LID: SELF ALIGNING		
LID STOPS: HARD	CONTAINMENT: ALPHA EMITTED RADIOACTIVE		
MOUNTING BASE PLATE: .75"			
MATERIAL: 304-SS, 400 SERIES OTHERS			

9413227.0272

UNITED ENGINEERS & CONSTRUCTORS A Raytheon Company Western Operations	EQUIPMENT DATA SHEET ☒ CDR ☐ TITLE I ☐ TITLE II ☐ TITLE III	ITEM NUMBER DO-05-545	PAGE 1 OF 1

CUSTOMER & LOCATION	PROJECT	UE&C JOB NO. 6237.006	DATE: 05/05/92
DOE-RL/WHC HANFORD, WA	WRAP FACILITY MODULE 2A	ACCOUNT NO. 1105	BY: SAS

REVISIONS (DATE & BY)	A		B		C		D	
	E		F		G		H	

SERVICE	MANUFACTURER	NO. REQ'D.	SOURCE OF QUOTE
LLRMW SAMPLE BAGLESS TRANSFER		1	

SAMPLE BAGLESS TRANSFER PORT

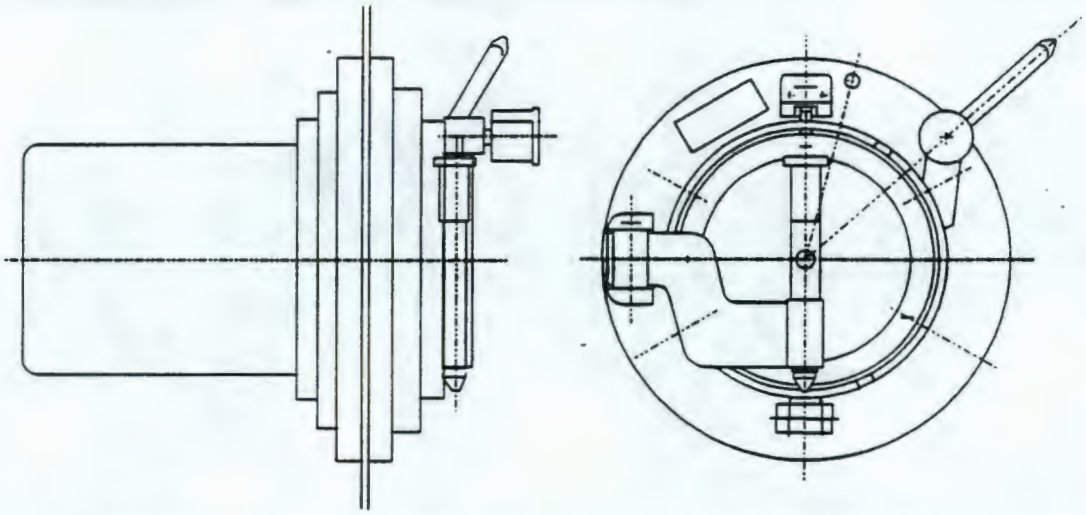

CONDITIONS OF SERVICE		DIMENSIONS	
APPLICATION: CONTAINMENT SYSTEM ALLOWING REMOVAL OF WASTE SAMPLES W/O RELEASING CONTAMINATION		A:	F:
UNIT LOAD DESCRIPTION: WASTE SAMPLES OF LLRMW		B:	G:
UNIT LOAD SIZE: 6.5" DIA X 6" HIGH	DUTY: 8 HRS/DAY	C:	H:
UNIT LOAD WEIGHT: 100 LBS	AVAILABLE POWER: 480/3/60 & 90 PSI AIR	D:	I:
LOCATION: PUG MILL ENCLOSURE	CONTROL INTERFACE: SWITCH INPUT	E:	J:
RATED CAPACITY: 1 LITER	NEC AREA CLASS: UNCLASSIFIED		
C/L DRUM FROM C/L PORT (OFF CEN. TOL.): <.197"			
CONSTRUCTION			
DRUM INTERFACE: BAGLESS/AIR PURGED	EMERGENCY CLOSING: ELASTOMERIC SEAL		
TYPE OF CONTROL: REMOTE	LIMIT SWITCHES: OPEN/CLOSE		
CELL LID/CROSS LID LIFT: LINKAGE	ACTUATION: PNEUMATIC		
CELL LID/CROSS LID MOVE: MECHANICAL	EMERGENCY CONTROLS: REQUIRED		
CELL LID/CROSS LID LOCKS: LINKAGE	CELL LID: SELF ALIGNING		
LID STOPS: HARD	CONTAINMENT: ALPHA EMITTED RADIOACTIVE		
MOUNTING BASE PLATE: .75"			
MATERIAL: 304-SS, 400 SERIES OTHERS			

9413227.0273

UNITED ENGINEERS & CONSTRUCTORS A Raytheon Company Western Operations	EQUIPMENT DATA SHEET ☒ CDR ☐ TITLE I ☐ TITLE II ☐ TITLE III	ITEM NUMBER DO-05-561	PAGE 1 OF 1

CUSTOMER & LOCATION	PROJECT	UE&C JOB NO. 6237.006	DATE: 05/05/92
DOE-RL/WHC HANFORD, WA	WRAP FACILITY MODULE 2A	ACCOUNT NO. 1105	BY: SAS

REVISIONS (DATE & BY)	A		B		C		D	
	E		F		G		H	

SERVICE	MANUFACTURER	NO. REQ'D.	SOURCE OF QUOTE
LLRMW SAMPLE BAGLESS TRANSFER		1	

SAMPLE BAGLESS TRANSFER PORT

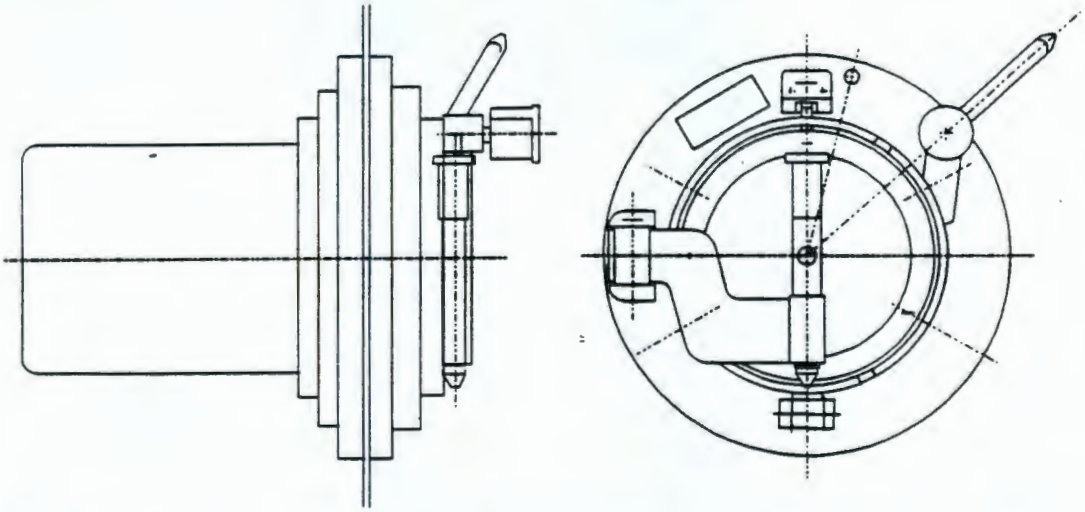

CONDITIONS OF SERVICE		DIMENSIONS	
APPLICATION: CONTAINMENT SYSTEM ALLOWING REMOVAL OF WASTE SAMPLES W/O RELEASING CONTAMINATION		A:	F:
UNIT LOAD DESCRIPTION: WASTE SAMPLES OF LLRMW		B:	G:
UNIT LOAD SIZE: 6.5" DIA X 6" HIGH	DUTY: 8 HRS/DAY	C:	H:
UNIT LOAD WEIGHT: 100 LBS	AVAILABLE POWER: 480/3/60 & 90 PSI AIR	D:	I:
LOCATION: BOX BREAKDOWN CELL	CONTROL INTERFACE: SWITCH INPUT	E:	J:
RATED CAPACITY: 1 LITER	NEC AREA CLASS: UNCLASSIFIED		
C/L DRUM FROM C/L PORT (OFF CEN. TOL.): <.197"	DRUM/PORT SEALING PRESSURE: 20 PSI		
CONSTRUCTION			
DRUM INTERFACE: BAGLESS/AIR PURGED	EMERGENCY CLOSING: ELASTOMERIC SEAL		
TYPE OF CONTROL: REMOTE	LIMIT SWITCHES: OPEN/CLOSE		
CELL LID/CROSS LID LIFT: LINKAGE	ACTUATION: PNEUMATIC		
CELL LID/CROSS LID MOVE: MECHANICAL	EMERGENCY CONTROLS: REQUIRED		
CELL LID/CROSS LID LOCKS: LINKAGE	CELL LID: SELF ALIGNING		
LID STOPS: HARD	CONTAINMENT: ALPHA EMITTED RADIOACTIVE		
MOUNTING BASE PLATE: .75"			
MATERIAL: 304-SS, 400 SERIES OTHERS			

9413227.0274

UNITED ENGINEERS & CONSTRUCTORS A Raytheon Company Western Operations	EQUIPMENT DATA SHEET ☒ CDR ☐ TITLE I ☐ TITLE II ☐ TITLE III	ITEM NUMBER DO-06-104	PAGE 1 OF 1

CUSTOMER & LOCATION	PROJECT	UE&C JOB NO. 6237.006	DATE: 06/15/92
DOE-RL/WHC HANFORD, WA	WRAP FACILITY MODULE 2A	ACCOUNT NO.	BY: GBD

REVISIONS (DATE & BY)	A		B		C		D	
	E		F		G		H	

SERVICE	MANUFACTURER	NO. REQ'D.	SOURCE OF QUOTE
MERCURY BOTTLE BAGLESS TRANSFER		1	

BOTTLE BAGLESS TRANSFER PORT

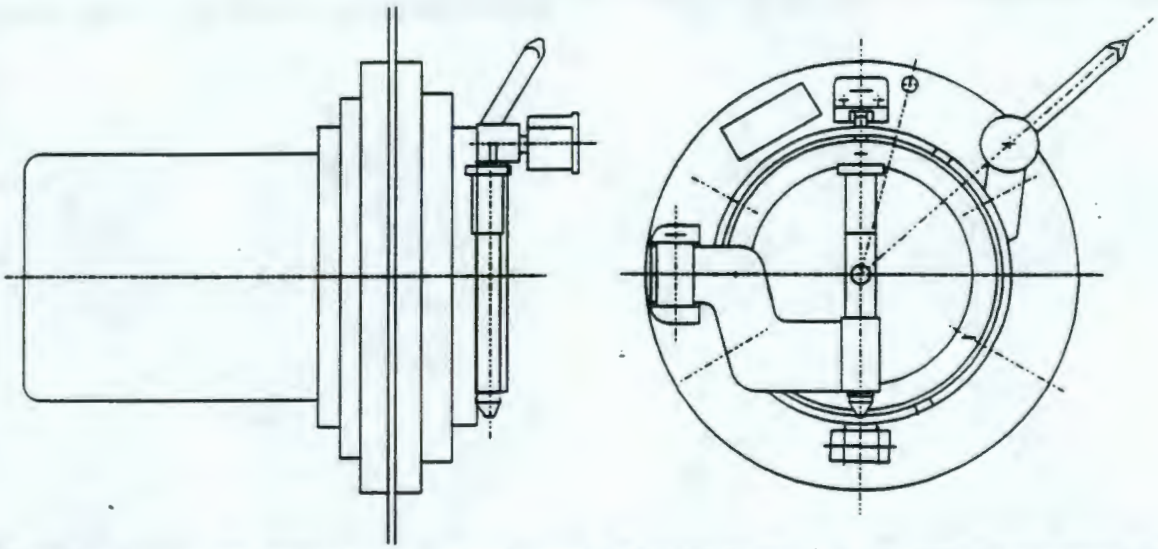

CONDITIONS OF SERVICE		DIMENSIONS	
APPLICATION: CONTAINMENT SYSTEM ALLOWING REMOVAL OF WASTE MERCURY BOTTLES W/O RELEASING CONTAMINATION		A:	F:
UNIT LOAD DESCRIPTION: MERCURY BOTTLES		B:	G:
UNIT LOAD SIZE: 6.5" DIA X 6" HIGH	DUTY: 8 HOURS/DAY	C:	H:
UNIT LOAD WEIGHT: 30 LBS	AVAILABLE POWER: 480/3/60 & 90 PSI AIR	D:	I:
LOCATION: SORTING ENCLOSURE	CONTROL INTERFACE: SWITCH INPUT	E:	J:
RATED CAPACITY: 1 LITER	NEC AREA CLASS: UNCLASSIFIED		
C/L DRUM FROM C/L PORT (OFF CEN. TOL.): <.197"			
CONSTRUCTION			
DRUM INTERFACE: BAGLESS AIR PURGED	EMERGENCY CLOSING: ELASTOMERIC SEAL		
TYPE OF CONTROL: REMOTE	LIMIT SWITCHES: OPEN/CLOSE		
CELL LID/CROSS LID LIFT: LINKAGE	ACTUATION: PNEUMATIC		
CELL LID/CROSS LID MOVE: MECHANICAL	EMERGENCY CONTROLS: REQUIRED		
CELL LID/CROSS LID LOCKS: LINKAGE	CELL LID: SELF ALIGNING		
LID STOPS: HARD	CONTAINMENT: ALPHA EMITTED RADIOACTIVE		
MOUNTING BASE PLATE: .75"			
MATERIAL: 304-SS, 400 SERIES OTHERS			

UNITED ENGINEERS & CONSTRUCTORS A Raytheon Company Western Operations	EQUIPMENT DATA SHEET ☒ CDR ☐ TITLE I ☐ TITLE II ☐ TITLE III	ITEM NUMBER DO-06-203	PAGE 1 OF 1

CUSTOMER & LOCATION	PROJECT	UE&C JOB NO. 6237.006	DATE: 05/15/92
DOE-RL/WHC HANFORD, WA	WRAP FACILITY MODULE 2A	ACCOUNT NO.	BY: GBD

REVISIONS (DATE & BY)	A		B		C		D	
	E		F		G		H	

SERVICE	MANUFACTURER	NO. REQ'D.	SOURCE OF QUOTE
MERCURY BOTTLE BAGLESS TRANSFER		1	

BOTTLE BAGLESS TRANSFER PORT

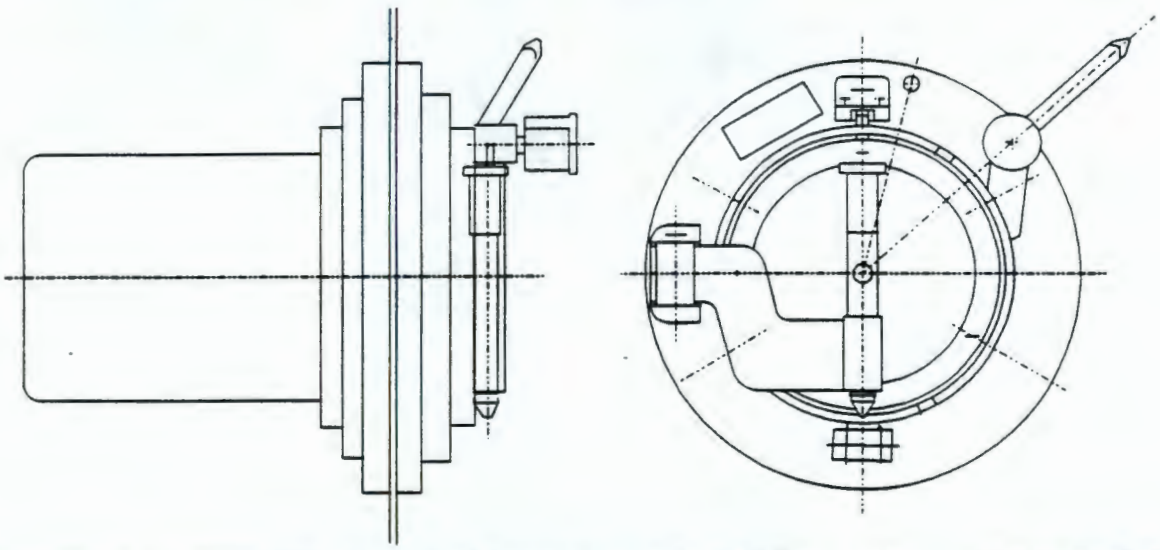

CONDITIONS OF SERVICE		DIMENSIONS	
APPLICATION: CONTAINMENT SYSTEM ALLOWING REMOVAL OF WASTE MERCURY BOTTLES W/O RELEASING CONTAMINATION		A:	F:
UNIT LOAD DESCRIPTION: MERCURY BOTTLES		B:	G:
UNIT LOAD SIZE: 6.5" DIA X 6" HIGH	DUTY: 8 HOURS/DAY	C:	H:
UNIT LOAD WEIGHT: 30 LBS	AVAILABLE POWER: 480/3/60 & 90 PSI AIR	D:	I:
LOCATION: SORTING ENCLOSURE	CONTROL INTERFACE: SWITCH INPUT	E:	J:
RATED CAPACITY: 1 LITER	NEC AREA CLASS: UNCLASSIFIED		
C/L DRUM FROM C/L PORT (OFF CEN. TOL.): <.197"			
CONSTRUCTION			
DRUM INTERFACE: BAGLESS AIR PURGED	EMERGENCY CLOSING: ELASTOMERIC SEAL		
TYPE OF CONTROL: REMOTE	LIMIT SWITCHES: OPEN/CLOSE		
CELL LID/CROSS LID LIFT: LINKAGE	ACTUATION: PNEUMATIC		
CELL LID/CROSS LID MOVE: MECHANICAL	EMERGENCY CONTROLS: REQUIRED		
CELL LID/CROSS LID LOCKS: LINKAGE	CELL LID: SELF ALIGNING		
LID STOPS: HARD	CONTAINMENT: ALPHA EMITTED RADIOACTIVE		
MOUNTING BASE PLATE: .75"			
MATERIAL: 304-SS, 400 SERIES OTHERS			

9413227.0276

UNITED ENGINEERS & CONSTRUCTORS A Raytheon Company Western Operations	EQUIPMENT DATA SHEET ☒ CDR ☐ TITLE I ☐ TITLE II ☐ TITLE III	ITEM NUMBER DO-06-204	PAGE 1 OF 1

CUSTOMER & LOCATION	PROJECT	UE&C JOB NO. 6237.006	DATE: 05/15/92
DOE-RL/WHC HANFORD, WA	WRAP FACILITY MODULE 2A	ACCOUNT NO.	BY: GBD

REVISIONS (DATE & BY)	A		B		C		D	
	E		F		G		H	

SERVICE	MANUFACTURER	NO. REQ'D.	SOURCE OF QUOTE
MERCURY BOTTLE BAGLESS TRANSFER		1	

BOTTLE BAGLESS TRANSFER PORT

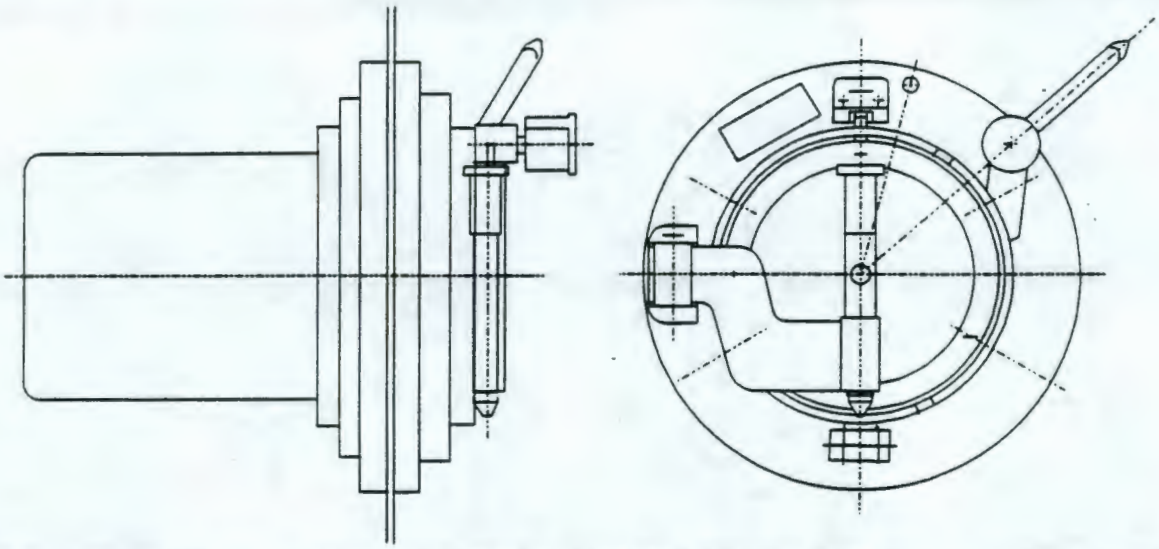

CONDITIONS OF SERVICE		DIMENSIONS	
APPLICATION: CONTAINMENT SYSTEM ALLOWING REMOVAL OF WASTE MERCURY BOTTLES W/O RELEASING CONTAMINATION		A:	F:
UNIT LOAD DESCRIPTION: MERCURY BOTTLES		B:	G:
UNIT LOAD SIZE: 6.5" DIA X 6" HIGH	DUTY: 8 HOURS/DAY	C:	H:
UNIT LOAD WEIGHT: 30 LBS	AVAILABLE POWER: 480/3/60 & 90 PSI AIR	D:	I:
LOCATION: SORTING ENCLOSURE	CONTROL INTERFACE: SWITCH INPUT	E:	J:
RATED CAPACITY: 1 LITER	NEC AREA CLASS: UNCLASSIFIED		
C/L DRUM FROM C/L PORT (OFF CEN. TOL.): <.197"			
CONSTRUCTION			
DRUM INTERFACE: BAGLESS AIR PURGED	EMERGENCY CLOSING: ELASTOMERIC SEAL		
TYPE OF CONTROL: REMOTE	LIMIT SWITCHES: OPEN/CLOSE		
CELL LID/CROSS LID LIFT: LINKAGE	ACTUATION: PNEUMATIC		
CELL LID/CROSS LID MOVE: MECHANICAL	EMERGENCY CONTROLS: REQUIRED		
CELL LID/CROSS LID LOCKS: LINKAGE	CELL LID: SELF ALIGNING		
LID STOPS: HARD	CONTAINMENT: ALPHA EMITTED RADIOACTIVE		
MOUNTING BASE PLATE: .75"			
MATERIAL: 304-SS, 400 SERIES OTHERS			

9413227.0277

SECTION 13401

94/3227.0278

THIS PAGE INTENTIONALLY
LEFT BLANK

THIS PAGE INTENTIONALLY
LEFT BLANK

WRAP MODULE 2A

SPECIFICATION SECTION
FOR
13401 CONTROL AND INSTRUMENTATION SPECIFICATION

TABLE OF CONTENTS

PART 1 GENERAL

1.01 SECTION SCOPE
1.02 RELATED SECTIONS
1.03 REFERENCES
1.04 SYSTEM DESCRIPTION
1.05 SUBMITTALS
1.06 DELIVERY, STORAGE AND HANDLING
1.07 SITE CONDITIONS

PART 2 PRODUCTS

2.01 MANUFACTURERS
2.02 MATERIALS
2.03 EQUIPMENT
2.04 COMPONENTS
2.05 FABRICATION
2.06 SHOP QUALITY CONTROL

PART 3 EXECUTION

3.01 PREPARATION
3.02 ERECTION, INSTALLATION AND APPLICATION
3.03 FIELD QUALITY CONTROL
3.04 ADJUSTING AND CLEANING
3.05 DEMONSTRATION
3.06 PROTECTION

WRAP MODULE 2A

SECTION 13401

CONTROL & INSTRUMENTATION SPECIFICATION

PART 1 GENERAL

1.01 SECTION SCOPE

A. This specification establishes the requirements for detailed design, fabrication, installation, start-up and acceptance testing of Instrument and Control Systems for WRAP 2A.

1.02 RELATED SECTIONS

1.03 REFERENCES

A. American National Standards Institute Standards
MC96.1 Temperature Measurement of Thermocouples
B16.10 Face-to-Face and End-to-End Dimensions of Valves

B. American Petroleum Institutes Standards & Recommended Practices

API 2000	Venting Atmospheric and Low-Pressure Storage Tanks
API RP520 API RP521	Recommended Practice for the Design and Construction of Pressure Relieving Systems in Refineries

C. American Society for Testing and Material Publication

ASTM A 269	Seamless and Welded Ferritic Stainless Steel Tubing for General Service

D. American Society of Mechanical Engineering Publication

ASME	Boiler & Pressure Vessel Code and Interpretations
Section VIII	Division 1 - Pressure Vessels

E. Instrument Society of America Publications

ISA S5.1	Instrumentation Symbols and Identification
ISA S20	Specification Forms for Process Measurement and Control Instruments, Primary Elements and Control Valves
ISA S51.1	Standard Process Instrumentation Terminology
ISA S75.01	Standard Control Valve Sizing Equations

9413227.0280

F. National Electrical Manufacturers Association (NEMA) Publication

ICS 6 — Enclosures for Industrial Controls and Systems

G. National Fire Protection Association (NFPA) Standard NFPA 496
National Electrical Code

H. Department of Energy (DOE) Order 6430.1A

I. Applicable Federal, State, and Local regulations

J. The edition for all codes and standards referred to in this Specification shall be that edition in force at the time of Specification Approval by all parties.

K. In case of conflict, the more stringent standard shall apply.

PART 2 PRODUCTS

2.03 EQUIPMENT

A. General Instrumentation

1. Select modular design instruments to facilitate rapid component replacement without in-place diagnostic and repair effort.

2. Instruments shall meet requirements of ISA standards and practices.

3. Use instruments with type 2 signal transmission/power supply and meeting the following requirements:

- Analog electronic signals 4-20 milliampere dc
- Pneumatic control signals 3-15 pounds per square inch (gage)
- Electric power: 120 volt ac ±10 percent, 60 hertz, single phase
- Pneumatic power: 60 pounds per square inch (gage) nominal pressure; clean dry air

4. Ensure external electrical instruments have NEMA type 4 or 4X standard enclosures.

5. Ensure alarm sensing devices are designed to be fail safe.

6. Use instruments with built in features for testing, monitoring, and surveillance.

B. Flow Measurement Instruments

1. Flow Measurement Instruments - General: Select flowmeters for required service and range. Where scaling may occur, positive displacement or area meters shall not be used. Flow measurement on radioactive streams shall be radiation resistant (10E7 rads) magnetic flowmeter.

2. Magnetic Flowmeters: System shall consist of flow element, locally mounted, indicating receiver, transducer/transmitter, and interconnecting signal cable.

   a. Transmitter output shall be linear with flow.

   b. Accuracy shall be ±0.5 percent and with a ±0.3 percent repeatability.

   c. Electrodes shall be Hastelloy-C or platinum-sintered into an aluminum oxide liner for up to 4-inch-diameter instruments.

   d. Instruments should incorporate means to eliminate zero drift.

3. Variable Area Meter

   a. Corrosive Services: Use metal tube rotameters with flange connections.

   b. Utility Water and Air Services: Use glass tube rotameter with flange or screwed connections.

   c. Gland Seal Water Services: Use pressure differential compensated rotameters.

9413227.0282

4. Flow Switches: Switch actuation shall be effected by flow plunger or actuating vane. Switch actuation point shall be adjustable during operation.

5. Transmitter: Use instruments with indicating transmitters except for radioactive or hazardous material streams; transmitters shall be furnished with a three valve manifold and mounting yolk. Differential range shall be adjustable through a range of 10 to 1 minimum.

6. Radioactive or Hazardous Material Streams:

   a. Use instruments with a five-valve manifold and mounting yolk.

   b. Use radiation resistant (10E7 rads) magnetic flowmeter for radioactive streams.

C. Tank Level Measurement Instruments: Use instruments with a linear signal accurate to ±0.5 percent of span. Do not use float-type instruments.

D. Pressure Measurement Instruments: Pressure transmitters and gages that contact radioactive or hazardous process solutions shall be non-plugging/nonholdup design, by use of diaphragm isolators or similar.

1. Pressure Transmitters: Accuracy of transmitters shall be within 0.3 percent of span.

2. Differential pressure transmitters shall utilize diaphragm measuring mechanism and force balance or strain gage type transmitting mechanism. Output signal shall be accurate to within 0.5 percent of metered span.

3. Pressure Gauges

   a. Use 4 inch minimum diameter, bottom connection, phenol turret case, white laminated, phenol dials with black graduations. Gauges shall have blow-out disc and safety glass. Measurement may be either rotary geared or crane and roller.

   b. Accuracy shall be ±0.5 percent of span.

c. Use gauges with isolated diaphragm isolators and surge protection if contact exists between gauge and process liquid.

4. Pressure Switches

Diaphragm operated in ranges up to 30 inches of water. Bellows or bourdon tubes in ranges of 30 inches or more of water. Do not use mercury type switches.

E. Temperature Measurement Instruments

1. General: Use instruments with thermocouples protected by a long-life sheath material.

2. Resistance Temperature Detectors (RTD): Use three-wire type with 100 ohm, platinum, 32°F elements.

3. Dial Thermometers: Use bimetallic type of "any angle" variety, nominal 5inch diameter, with corrosion resistant and weatherproof case.

4. Temperature Switches: Repeatability shall be ±1.0 percent of span.

F. Tubing, Valves and Fittings: Provide in accordance with pipe codes.

END OF SECTION

94A3227.0284

SECTION 13402

94/3227.0285

THIS PAGE INTENTIONALLY
LEFT BLANK

WRAP MODULE 2A

SPECIFICATION SECTION
FOR
13402 CONTROL & INSTRUMENTATION FOR PACKAGED MECHANICAL EQUIPMENT

TABLE OF CONTENTS

PART 1 GENERAL

1.01 SECTION SCOPE
1.02 RELATED SECTIONS
1.03 REFERENCES
1.04 SYSTEM DESCRIPTION
1.05 SUBMITTALS
1.06 DELIVERY, STORAGE AND HANDLING
1.07 SITE CONDITIONS

PART 2 PRODUCTS

2.01 MANUFACTURERS
2.02 MATERIALS
2.03 EQUIPMENT
2.04 COMPONENTS
2.05 FABRICATION
2.06 SHOP QUALITY CONTROL

PART 3 EXECUTION

3.01 PREPARATION
3.02 ERECTION, INSTALLATION AND APPLICATION
3.03 FIELD QUALITY CONTROL
3.04 ADJUSTING AND CLEANING
3.05 DEMONSTRATION
3.06 PROTECTION

9413227.0286

WRAP MODULE 2A

SECTION 13402

CONTROL AND INSTRUMENTATION FOR PACKAGED MECHANICAL EQUIPMENT

PART 1 GENERAL

1.01 SECTION SCOPE

A. This specification establishes the requirements for detailed design, fabrication, installation, start-up and acceptance testing of controls and instrumentation for packaged mechanical equipment for WRAP Module 2A.

1.02 RELATED SECTIONS

1.03 REFERENCES

A. The edition for all codes and standards referred to in this specification shall be that edition in force at the time of Specification Approval by all parties.

B. In case of conflict, the more stringent standard shall apply.

PART 2 PRODUCTS

2.02 MATERIALS

A. The Owner or Buyer reserves the right to specify and supply the instrumentation and/or instruct the Seller to purchase such items as required.

B. Copper or copper alloy materials for external instrument parts or for instrument tubing and/or fittings shall <u>not</u> be used. All tubing and/or fittings for instrument purposes shall be 316 seamless stainless steel. Teflon tape shall <u>not</u> be used for instrument connections. Cajon "SWAK", or equal, liquid thread dope shall be used instead. 0.25 inch O.D. and 3/8 inch O.D. tubing shall have .035 inch wall thickness. 0.5 inch O.D. tubing shall have .065 inch wall thickness. Tubing for pressure and differential pressure instrument sensing lines shall be 0.5 inch O.D. minimum. In areas of high vibration potential (i.e. air compressor skids) stainless steel tubing shall be used throughout.

9413227.0287

2.03 EQUIPMENT

A. Control Panels

1. All auxiliary and local panels associated with package units shall be designed and supplied by the package Seller. Front of panel layout drawings and electrical or tubing schematic drawings shall be submitted to the Buyer for approval prior to fabrication. The location of a local panel on a Seller package shall be specified and shown on the General Arrangement Drawings submitted for review.

2. Large free-standing upright panels shall be provided with internal light and switch and 120 volt duplex grounding type receptacle wired to a junction box to be fed from a separate external circuit. Doors shall be the double piano hinge type.

3. All panels including instrument components and electrical wiring devices must conform to the electrical area classification specified in the equipment data sheets.

4. All power wires going out to field devices and signal wires returning from field devices shall be individually fused.

B. Electronic Transmitters and Amplifiers

1. Electronic transmitters shall be the two-wire type, surge protected, loop powered, and shall be provided as specified and indicated. Transmitter output signals shall be 4 to 20 milliamperes Direct Current (DC) and shall sustain 600 Ohms plus or minus 100 Ohms output impedance at 24 Volts DC as a minimum. Transmitters shall be supplied with integral output indicator.

2. Unless otherwise specified, transmitters shall be of the "smart" type. "Smart" transmitters shall have full duplex digital communication capability which is transparent to the analog (4-20 mA) signal. "Smart" transmitters shall be remotely calibrated via a hand-held terminal.

3. Seller shall coordinate with Buyer to ensure manufacturer and model of transmitters are consistent with

9413227.0288

those in the rest of the plant. Buyer reserves the right to specify the manufacturer and model of transmitters.

4. Transmitter electronics, amplifiers, and range cards shall be plug-in type.

C. Flow Instruments

1. Flow Elements: For heating and ventilation controls, air flow shall preferably be measured by means of pitot tubes. For stack exhaust, thermal mass flow meters are preferred. For liquid flow, measurement magnetic flow meters are the preferred method.

2. Flow Transmitters: Differential pressure transmitters shall have stainless steel sensing parts unless process service conditions require other materials. Body material shall generally be carbon steel with carbon steel bolting. Process pressure connections shall be 0.5 inch NPT.

D. Pressure Instruments

1. Pressure instrument shall be provided with block and bleed valves. On services involving dangerous or toxic fluids, purge connections must be provided to enable the system to be made safe for maintenance. Primary pressure elements shall be stainless steel for all pressure instruments unless conditions of service require otherwise. Copper or aluminum pressure containing parts shall not be used.

2. Pressure Gauges: Pressure gauges shall generally be 4.5 inch dial, solid front safety case type with blowout back, 0.5 inch NPT bottom connection, phenol or drawn stainless steel case, 316 SS bourdon and socket, stainless steel movement, micrometer pointer. Pulsation dampeners shall be provided for pulsating pressure services. Liquid filled gauges shall be used for all pump discharges, vibration or pulsation services. Dials shall be white non-rusting plastic or aluminum with black figures.

3. Pressure Switches: Pressure switches shall be capable of sensing full line pressure without damage or affecting calibration. Electrical leads on factory

9413227.0289

sealed switches shall be at least 18 inches long and labeled to identify normally open, normally closed, and common leads.

4. Pressure Transmitters: Electronic pressure transmitters shall have strain gauge or capacitance type sensing element.

E. Temperature Instruments

1. Wells and Assemblies: Each temperature sensor must be installed in a thermowell. Thermowell immersion length shall be to the center of the pipe or 6 inches, whichever is shorter. Where thermowells are installed in lines smaller than 3 inches, the piping shall be expanded to 3 inch size to accommodate the thermowell. Standard length thermowells shall be used.

2. Sensor: 3-wire, 100 ohm, platinum RTD's shall be used below 300 degrees Fahrenheit for electronic control.

3. Switches: Temperature switches may utilize thermal-filled system, thermocouples, or RTD's for inputs.

F. Level Instruments

1. Where two or more level instruments cover the same general range, a 3 inch minimum level bridle may be used to minimize vessel connections. Process connections shall be 1.5 inch NPT or flanged per piping specifications with side-bottom configuration unless physical limitations require alternate configuration. Block, vent, and drain valve shall be supplied. All level instruments shall have individual connections.

2. Level Switches for alarm, cut-in and cut-off and other services requiring two-position action shall have contacts capable of handling 5 amps at 120 VAC or 28 VDC. External relays may be used to meet this requirement.

G. Pressure Relieving Devices

1. Pressure relieving devices shall be used on all pressure vessels, exchangers, and all of the equipment and piping as specified by the appropriate codes. Any process piping or vessel that may be blocked in and

0620 7227 4/6

have an increase in pressure from vaporization due to a low liquid boiling point shall be protected from over pressure.

2. Safety relief valves shall normally be conventional spring or balanced bellow type. Pilot operated relief valves may be used with Buyer's approval in writing. Valves in hot water, steam and air services shall be provided with manual lifting levers.

3. Each cause of over pressure or vacuum pressure shall be considered separately, and the relieving devices shall be sized for the worst possible condition. Calculations for all sizing cases shall be submitted to the Buyer for approval.

4. All relieving devices with inlet connection sizes 1 inch and larger shall be flanged rated in accordance with piping specifications. Screwed relieving devices are permitted only in 3/4 inch thermal relief inlet size. Threaded relieving devices shall be braced to prevent back-off.

9413227.0291

H. Control Valves

1. Minimum control valve size shall be 1 inch. If smaller sizes are required, reduced trim shall be used. 1.25, 2.5, and 5 inch sizes shall not be used. All 1 inch and larger control valves shall be flanged.

2. Pressure or temperature regulator valves shall be of a manufacturer's standard construction and materials.

3. Valve positioners, limit switches, local controllers, transducers, solenoid valves, etc. associated with control valves may be mounted on control valves.

4. All tubing shall be 316 SS with Swagelok fittings. Air sets shall be Fisher 67FR or equal

5. All solenoid valves must meet local electrical classification requirements, and shall have suppression diodes. Coils shall be continuous duty encapsulated type.

I. Proximity Sensors

1. Electrical leads on factory sealed switches shall be at least 18 inches long and labels to identify normally open, normally closed, and common leads.

2. Limit Switches: Switches shall be hermetically sealed microswitches with operators to meet operation requirement.

3. Proximity Switches: Proximity switches shall be inductance type with plastic bodies. Sensors shall be shielded.

4. Photo Sensors: Photo sensors shall be of the transmitter/receiver type. Fiber optics may be used if physical limitations prevents the mounting of the photo-sensor at the location.

J. Alarms

1. Seller shall provide interface for specific alarms or one common alarm as specified in the Equipment Data Sheet to tie in with the Plant Control System.

2. Alarm systems shall be fail safe. Alarm systems may be solid-state type of modular construction.

3. Audio alarms shall be distinctly audible from 10 feet above the ambient sound level. Warning lights and beacons shall be visible from any angle in a horizontal plane.

2.04 COMPONENTS

A. The control system shall be capable of communicating with the Plant Control System and the Data Management System via hardwired contacts, 4-20 mA analog signal, RS-232, or Local Area Network (LAN).

B. If complex control requires a microprocessor based controller, the manufacturer and model shall be consistent with those in the rest of the plant. The Buyer reserves the right to specify the manufacturer and model of the microprocessor based controller and associated communications equipment.

GH 7227.0292

C. The Seller shall provide all instrumentation associated with the package unit and shall provide junction boxes and/or local panels at the edge of the skid with terminal strips and wire markers identifying each point for termination. All terminations shall be brought to terminal strips including all spares.

D. Analog control instrumentation which interfaces with the Plant Control System (PCS) shall use isolated 4-20 mA DC electronic signals with power supplied from the PCS where possible. Switches for discrete signals shall have a minimum rating of 5 AMPS at 120 VAC and 3 AMPS at 28 VDC, resistive loads, with double Form C contacts.

E. Analog pneumatic signals shall be 3 to 15 PSIG. The Seller shall furnish all required filters and regulators. Local controls shall be indicating type. The plant instrument air supply will be 90 PSIG operating and 125 PSIG maximum. The Seller shall supply current to pneumatic transducers (I/P) to interface electronic analog control signal to all seller supplied pneumatic controls.

9413227.0293

END OF SECTION

SECTION 13406

94/3227-0294

THIS PAGE INTENTIONALLY
LEFT BLANK

WRAP MODULE 2A

SPECIFICATION SECTION
FOR
13406 BAR CODE IDENTIFICATION

TABLE OF CONTENTS

PART 1 GENERAL

1.01 SECTION SCOPE
1.02 RELATED SECTIONS
1.03 REFERENCES
1.04 SYSTEM DESCRIPTION
1.05 SUBMITTALS
1.06 DELIVERY, STORAGE AND HANDLING
1.07 SITE CONDITIONS

PART 2 PRODUCTS

2.01 MANUFACTURERS
2.02 MATERIALS
2.03 EQUIPMENT
2.04 COMPONENTS
2.05 FABRICATION
2.06 SHOP QUALITY CONTROL

PART 3 EXECUTION

3.01 PREPARATION
3.02 ERECTION, INSTALLATION AND APPLICATION
3.03 FIELD QUALITY CONTROL
3.04 ADJUSTING AND CLEANING
3.05 DEMONSTRATION
3.06 PROTECTION

9413277.0295

WRAP MODULE 2A

SECTION 13406

BAR CODE IDENTIFICATION

PART 1 GENERAL

1.01 SECTION SCOPE

A. This specification establishes the requirements for detailed design, fabrication, installation, start-up and acceptance testing of Bar Code Identification (Bar Code) System for WRAP Module 2A.

1.02 RELATED SECTIONS

1.03 REFERENCES

A. The edition for all codes and standards referred to in this specification shall be that edition in force at the time of specification approval by all parties.

B. In case of conflict, the more stringent standard shall apply.

PART 2 PRODUCTS

2.02 MATERIALS

A. Provide Bar Code systems consisting of but not limited to bar code laser scanners, reader terminals, port concentrators, bar code label printers, printer driver, communication cables, accessories, and other components as required for complete installation.

B. Except otherwise indicated, proved manufacturer's standard Bar Code system components as indicated by published product information, designed and constructed as recommended by manufacturer.

2.03 EQUIPMENT

A. Provide Bar Code system with following functional and construction features as indicated:

1. Laser Bar Code Scanner (Scanner): Scanner shall utilize a laser diode with visible light source. And,

9413227.0296

Scanner shall be able to read all types of bar code labels and media from a maximum distance of 20 inches. Construction for the Scanner shall be able to withstand the harsh usage in an industrial environment. Hand held scanners shall have a 25 foot cord to allow movement by the operator. Automatic scanners shall turn on light source only when object to be scanned is present.

2. Reader Terminals: Reader terminals shall have the following capability:

   - Sufficient power to supply the laser bar code scanner.
   - Auto-discrimination capability to read and decipher all common bar codes.
   - RS-232C or RS-485 communication interface transmitting ASCII full 128 character set.
   - Minimum of 8K bytes of battery backed up Random Access Memory (RAM) to store data if the host is down.
   - Multiple scans of the bar code to ensure correct data.
   - Optional data terminal capability to prompt operator and enter data by keyboard.

3. Port Concentrators: Port concentrators shall be used to connect all reader terminals in one area to the associated Plant Management System (PMS) communication link. Port concentrators shall be able to store data if communication to the PMS is down.

4. Bar Code Label Printer: Bar Code label printers shall use thermal transfer or laser technology to print labels. Printers shall have RS-232C or Centronics parallel interface. Printer shall have capability to rotate print images in 90 degree increments.

5. Printer Driver: Bar Code Printer Driver shall be an IBM PC compatible with the proper software to generate bar codes.

END OF SECTION

THIS PAGE INTENTIONALLY
LEFT BLANK

SECTION 13407

94U3227.0298

THIS PAGE INTENTIONALLY
LEFT BLANK

THIS PAGE INTENTIONALLY
LEFT BLANK

WRAP MODULE 2A

SPECIFICATION SECTION
FOR
13407 ANNUNCIATORS

TABLE OF CONTENTS

PART 1 GENERAL

1.01 SECTION SCOPE
1.02 RELATED SECTIONS
1.03 REFERENCES
1.04 SYSTEM DESCRIPTION
1.05 SUBMITTALS
1.06 DELIVERY, STORAGE AND HANDLING
1.07 SITE CONDITIONS

PART 2 PRODUCTS

2.01 MANUFACTURERS
2.02 MATERIALS
2.03 EQUIPMENT
2.04 COMPONENTS
2.05 FABRICATION
2.06 SHOP QUALITY CONTROL

PART 3 EXECUTION

3.01 PREPARATION
3.02 ERECTION, INSTALLATION AND APPLICATION
3.03 FIELD QUALITY CONTROL
3.04 ADJUSTING AND CLEANING
3.05 DEMONSTRATION
3.06 PROTECTION

WRAP MODULE 2A

SECTION 13407

ANNUNCIATORS

PART 1 GENERAL

1.01 SECTION SCOPE

A. This specification establishes the requirements for detailed design, fabrication, installation, start-up and acceptance testing of Annunciators for WRAP Module 2A.

1.02 RELATED SECTIONS

1.03 REFERENCES

A. Instrument Society of America
Standard S18.1 Annunciator Sequences and Specifications

B. American Petroleum Institute
API 550 Section 13 Alarms and Protective Devices

B. The edition for all codes and standards referred to in this Specification shall be that edition in force at the time of Specification Approval by all parties.

C. In case of conflict, the more stringent standard shall apply.

PART 2 PRODUCTS

2.03 EQUIPMENT

A. Annunciator shall be enclosed in a NEMA 12 enclosure and installed in the Control Room.

B. Annunciator internal logic shall be accomplished in the annunciator's cabinet and not accomplished by a separate programmable controller (P.C.).

C. The alarm annunciator shall be the solid state electronic type.

D. Each alarm card shall be provided with the capability of operating with a normally open or normally closed field contact, i.e., field selectable, by a slide switch.

94J3227.0300

E. Each annunciator point shall be self canceling type and have a separate logic card.

F. Auxiliary contacts shall be provided for all alarm points. Contact rating shall be 5 Amps @ 120 VAC or 28 VDC.

G. Each annunciator point shall be provided with two terminal points for field wiring. The terminals shall be large enough for #14AWG wire.

H. Approximately 20 alarm points will be annunciated, with 20 being the minimum. A minimum of 20% spares on the annunciator shall be provided.

I. The alarm annunciator layout shall group alarms by the equipment or area they protect.

J. All spare points shall be active and the spare points shall be wired to the filed terminal strip that is located in the panel.

K. Annunciator is to be capable of being powered from 110 VAC supply. All internal logic shall be 24 VDC, as will be the field contact interrogation voltage.

L. The annunciator panel shall provide 24 VDC power for field contact interrogation.

M. Horn shall be specified as 24 VDC electronic adjustable tone type.

N. Each alarm window shall be of the integral back lighted type. Nameplates shall be approximately 1.5" H X 3" W with letters approximately 0.25" H X 3/16" W.

O. 'Test', 'Acknowledge' and 'Horn Silence' pushbuttons are to be mounted in a common plug-in module. And, the module shall occupy the lower right hand position.

P. Remote 'Acknowledge' and 'Silence' pushbuttons shall be provided.

2.04 COMPONENTS

The following suggests the Annunciator system configuration:

WRAP MODULE 2A

QTY.	DESCRIPTION
1 ea	Annunciator Panel 4-high by 6-wide mounted in NEMA 12 surface mounted enclosure
24 ea	Single point light box
24 ea	Single point logic card with re-transmit contacts
1 ea	Flasher
1 ea	Power Supply, mounted and wired in enclosure
3 ea	Pushbuttons, mounted and wired on enclosure door
1 ea	Horn, mounted and wired on enclosure door

END OF SECTION

9413227.0302

SECTION 13451

9/14/3227.0303

THIS PAGE INTENTIONALLY
LEFT BLANK

THIS PAGE INTENTIONALLY
LEFT BLANK

WRAP MODULE 2A

SPECIFICATION SECTION
FOR
13451 HEALTH PHYSICS INSTRUMENTATION

TABLE OF CONTENTS

PART 1 GENERAL

1.01 SECTION SCOPE
1.02 RELATED SECTIONS
1.03 REFERENCES
1.04 SYSTEM DESCRIPTION
1.05 SUBMITTALS
1.06 DELIVERY, STORAGE AND HANDLING
1.07 SITE CONDITIONS

PART 2 PRODUCTS

2.01 MANUFACTURERS
2.02 MATERIALS
2.03 EQUIPMENT
2.04 COMPONENTS
2.05 FABRICATION
2.06 SHOP QUALITY CONTROL

PART 3 EXECUTION

3.01 PREPARATION
3.02 ERECTION, INSTALLATION AND APPLICATION
3.03 FIELD QUALITY CONTROL
3.04 ADJUSTING AND CLEANING
3.05 DEMONSTRATION
3.06 PROTECTION

9417227.0804

WRAP MODULE 2A

SECTION 13451

HEALTH PHYSICS INSTRUMENTATION

PART 1 GENERAL

1.01 SECTION SCOPE

A. This specification establishes the requirements for detailed design, fabrication, installation, start-up and acceptance testing of Health Physics Instrumentation for WRAP Module 2A.

1.02 RELATED SECTIONS

1.03 REFERENCES

A. American National Standards Institute (ANSI)

N13.10-74	Specifications and Performance of On-Site Instrumentation for Continuously Monitoring Radioactivity in Effluents
N317-85	Performance Criteria for Instrumentation used for Inplant Plutonium Monitoring
N323-83	Standard Radiation Protection Instrumentation Test and Calibration

B. Department of Energy (DOE)

DOE 6430.1A	General Design Criteria
DOE 5480.11	Radiation Protection for Occupational Workers

C. National Electric Manufacturers Association (NEMA)

D. Environmental Protection Agency (EPA)

E. The edition for all codes and standards referred to in this Specification shall be that edition in force at the time of Specification Approval by all parties.

F. In case of conflict, the more stringent standard shall apply.

9413227.0305

1.04 SYSTEM DESCRIPTION

A. General

1. The purpose of Health Physics instrumentation is to monitor and control radiation and the spread of contamination in and around the WRAP Module 2 Facility.

2. The Alpha, Beta, and Ventilation Duct Continuous Air Monitoring (CAM) Systems must:

   a. Provide continuous measurement of airborne contamination levels in room air and glovebox exhaust ducts

   b. Warn personnel of airborne contamination that exceeds control limits

   c. Automatically initiate a facility or operational area evacuation warning to personnel when control limits are exceeded

3. The Area Radiation Monitoring Systems must:

   a. Provide continuous measurement of gamma radiation levels in areas of the facility which could subject workers to unacceptable levels of radiation during routine operations

   b. Warn personnel of gamma radiation levels that exceed control limits

   c. Automatically initiate a facility or operational area evacuation warning to personnel when control limits are exceeded

4. The Surface Contamination Detection Systems must:

   a. Provide on-demand measurement of alpha and/or beta/gamma surface contamination

   b. Notify personnel of location and/or quantity of detectable levels of surface contamination on clothing, skin, smear samples and equipment

9413277.0806

5. The Operator Air Sampling Systems must:

   a. Provide record sampling of typical operator breathing air in the glovebox areas of the process room

PART 2 PRODUCTS

2.03 EQUIPMENT

A. Beta Continuous Air Monitors (CAMs): The typical Beta CAM in use at the WHC site is the Eberline Model AMS-3A Beta CAM.

B. Operator Air Samplers: The typical Operator Air Sampler in use at the WHC site is TBD.

C. Ventilation Alpha Continuous Air Monitors (CAMs): The typical Ventilation Beta CAM in use at the WHC site is the Eberline Model AMS-3A Beta CAM.

D. Area Radiation Monitors (ARMs): The typical ARM in use at the WHC site is the Eberline RMS II System, which utilizes a central readout, the Eberline Model EC4, or the Eberline DCA Models 3090-3 or 3096-3 Area Monitors.

E. Beta "Frisker" Monitors: The typical Beta Friskers in use at the Hanford site is the Eberline PAC-46-3.

F. Hand and Foot Monitors: The typical Hand and Foot Monitor in use at the WHC site is the Eberline HFM-6 Hand and Foot Monitor.

G. Smear/Sample Analyzers: The typical Smear Analyzer in use at the WHC site is the Eberline Model SAC adapted to measure either alpha or beta radiation.

H. Power Supplies: 120 VAC ±10%, 60 Hz ±1 Hz, single phase will be supplied for the vacuum pumps and the remainder of the system.

I. Input/Output: The standard interface for Health Physics instrumentation to the WRAP Module 2A data management system (DMS) will be TBD.

9413227.0307

J. Vacuum Pumping Systems

1. A constant positive displacement vacuum pump is required with each CAM and Operator Air Sampling System. Each pump should provide the required flow rate for all sample withdrawal systems at a vacuum of at least TBD.

2. The pumps will pull samples through the Beta and Ventilation CAMs and the Operator Air Samplers.

3. Pulsation dampeners and sound attenuators shall be provided at the inlet and outlet of each pump.

4. The pump exhaust shall be returned to the Buyer supplied exhaust line for return to the location it was withdrawn.

5. Piping shall be clearly identified as to size, material, material standards, and whether or not it is to be provided by the Vendor or by others.

6. A vacuum regulator shall be provided by the Vendor to allow makeup air to be drawn into the pump under conditions of low sample flow rate in order to improve the life of the pump.

7. The pumps shall use synthetic lubricants to improve the life of the pump bearings.

K. Operator Interfaces

L. General

1. The Vendor shall permanently attach to each item supplied by the Vendor a permanent nameplate (metal or laminated plastic) that includes the following information as a minimum:

   - Instrument Item No.: TBD
   - Service: TBD

9413227.0808

2. Tag letters shall be 3/32 inches in height or larger. The same information must also be stenciled or painted on all shipping containers to assist in the identification of particular equipment items in storage at the site.

END OF SECTION

9413227.0309

SECTION 13452

9W 3227.0310

THIS PAGE INTENTIONALLY
LEFT BLANK

WRAP MODULE 2A

SPECIFICATION SECTION
FOR
13452 ISOKINETIC STACK EFFLUENT MONITORING SYSTEM

TABLE OF CONTENTS

PART 1 GENERAL

1.01 SECTION SCOPE
1.02 RELATED SECTIONS
1.03 REFERENCES
1.04 SYSTEM DESCRIPTION
1.05 SUBMITTALS
1.06 DELIVERY, STORAGE AND HANDLING
1.07 SITE CONDITIONS

PART 2 PRODUCTS

2.01 MANUFACTURERS
2.02 MATERIALS
2.03 EQUIPMENT
2.04 COMPONENTS
2.05 FABRICATION
2.06 SHOP QUALITY CONTROL

PART 3 EXECUTION

3.01 PREPARATION
3.02 ERECTION, INSTALLATION AND APPLICATION
3.03 FIELD QUALITY CONTROL
3.04 ADJUSTING AND CLEANING
3.05 DEMONSTRATION
3.06 PROTECTION

WRAP MODULE 2A

SECTION 13452

ISOKINETIC STACK EFFLUENT MONITORING SYSTEM

PART 1 GENERAL

1.01 SECTION SCOPE

A. This specification establishes the requirements for detailed design, fabrication, installation, start-up and acceptance testing of isokinetic air sampling and radiation monitoring systems for WRAP Module 2A.

1.02 RELATED SECTIONS

1.03 REFERENCES

A. American National Standards Institute (ANSI)

N13.1-69	Guide to Sampling Airborne Radioactive Materials in Nuclear Facilities
N42.18-85	Specifications and Performance of On-Site Instrumentation for Continuously Monitoring Radioactivity in Effluents
N317-85	Performance Criteria for Instrumentation used for Inplant Plutonium Monitoring
N323-83	Standard Radiation Protection Instrumentation Test and Calibration

B. Department of Energy (DOE)

DOE/EP-0096	A Guide for Effluent Radiological Measurements at DOE Installations
DOE 5400.6	Radiological Effluent Monitoring and Environmental Surveillance
DOE/EH-0173T	Environmental Regulatory Guide for Radiological Effluent Monitoring and Environmental Surveillance, January 1991
DOE 6430.1A	General Design Criteria

C. National Electric Manufacturers Association (NEMA)

D. Environmental Protection Agency (EPA)

40CFR60	Appendix A - Test Methods
	Method 1 - Sample and velocity traverses for stationary sources

94/3227.0312

Method 2 - Determination of stack gas velocity and volumetric flow rate (Type S pitot tube)

40CFR61 National Emissions Standards for Emissions of Radionuclides other than Radon from DOE Facilities (Subsection H)

E. The edition for all codes and standards referred to in this Specification shall be that edition in force at the time of Specification Approval by all parties.

F. In case of conflict, the more stringent standard shall apply.

1.04 SYSTEM DESCRIPTION

A. General

1. The purpose of the Isokinetic Stack Effluent Monitoring System is to monitor the exhaust stack for airborne radioactive particles. The system must:

a. Provide independent continuous isokinetic and representative samples for each particulate collection/monitor system

b. Measure stack velocity and flow rate

c. Measure sample flow rates

d. Totalize stack and sample flow rates

e. Control sample flow rates to maintain isokinetic conditions during the sample period

PART 2 PRODUCTS

2.03 EQUIPMENT

A. Isokinetic Stack Effluent Enclosure

1. The isokinetic stack effluent enclosure shall consist of all necessary electronic modules for stack velocity measurement, isokinetic sample mass flow meters, control valves and controllers, flow totalizers,

alarms, stack and sample flow transmitters (4-20 mA output), count rate meters for the radiation monitors with alarms and transmitters (4-20 mA output).

2. The Vendor shall be responsible for the complete cabinet design and fabrication and all the necessary electronic modules.

B. Isokinetic Probe Assembly

1. The isokinetic probe assembly shall consist of a single probe assembly mounted by direct insertion into the stack, having a multi-point thermal mass velocity probe and an independent low particle loss isokinetic multi-point nozzle array for each particulate collection/monitor system.

C. Power Supplies

1. 120 VAC ±10%, 60 Hz ±1 Hz, single phase will be supplied for the vacuum pumps and the remainder of the system.

D. Input/Output

E. Vacuum Pumping System

1. Several constant positive displacement vacuum pumps are required. Each pump should be sized to provide the required flow rate for all sample withdrawal systems at a vacuum of at least TBD.

2. The pumps will pull samples through the alpha monitor, beta/gamma monitor, and record filter.

F. Record Filter Holder and Sample Assembly

1. The record filter holder shall be located as close as practical to the sample rakes to minimize particle loss by others. It shall use a convenient standard filter media size (eg., 47 mm, 3 inches, etc.), be leaktight, allow easy access for filter changing, be weatherproof, have inlet and outlet full port ball valves, and operate from a separate independent sample rack.

9413227.0314

WRAP MODULE 2A

G. Temperature Detector Assembly

H. Operator Interfaces

END OF SECTION

9413227.0315

THIS PAGE INTENTIONALLY
LEFT BLANK

SECTION 13461

9H/3227:0316

THIS PAGE INTENTIONALLY
LEFT BLANK

THIS PAGE INTENTIONALLY
LEFT BLANK

WRAP MODULE 2A

SPECIFICATION SECTION
FOR
13461 PLANT MANAGEMENT SYSTEM HARDWARE

TABLE OF CONTENTS

PART 1 GENERAL

1.01 SECTION SCOPE
1.02 RELATED SECTIONS
1.03 REFERENCES
1.04 SYSTEM DESCRIPTION
1.05 SUBMITTALS
1.06 DELIVERY, STORAGE AND HANDLING
1.07 SITE CONDITIONS

PART 2 PRODUCTS

2.01 MANUFACTURERS
2.02 MATERIALS
2.03 EQUIPMENT
2.04 COMPONENTS
2.05 FABRICATION
2.06 SHOP QUALITY CONTROL

PART 3 EXECUTION

3.01 PREPARATION
3.02 ERECTION, INSTALLATION AND APPLICATION
3.03 FIELD QUALITY CONTROL
3.04 ADJUSTING AND CLEANING
3.05 DEMONSTRATION
3.06 PROTECTION

9413227.0317

WRAP MODULE 2A

SECTION 13461

PLANT MANAGEMENT SYSTEM HARDWARE

PART 1 GENERAL

1.01 SECTION SCOPE

A. This specification establishes the requirements for detailed design, fabrication, installation and set-up of a Plant Management System (PMS) for WRAP Module 2A. The PMS will be provided and utilized to satisfy five basic objectives; (1) data acquisition, (2) data analysis, (3) process system surveillance, (4) inventory control, and (5) control and surveillance of building utilities and HVAC.

1.02 RELATED SECTIONS

1.03 REFERENCES

A. All equipment covered by these specifications shall be designed, manufactured, installed and tested in accordance with all currently approved provisions of the following codes, standards and regulations, in force at the time of purchase order issuance.

1. ANSI American National Standards Institute
   N Designation (Nuclear Related Standards)

2. ASME American Society of Mechanical Engineers

3. ANS American Nuclear Society

4. EPRI Electric Power Research Institute
   NP-3659 Chapter 4 Recommended Panel Design Features

5. IEEE Institute of Electrical and Electronic Engineers

6. ISA Instrument Society of America

ISA-RP60.8	Electrical Guide for Control Centers
ISA-S5.1	Instrumentation Symbols and Identification

9413227.0318

ISA-S5.3	Graphic Symbols for Distributed Control/Shared Display Instrumentation, Logic and Computer Systems
ISA-S5.4	Instrument Loop Diagrams
ISA-S5.5	Graphic Symbols for Process Displays
ISA-S18.1	Annunciator Sequences and Specifications
ISA-S51.1	Standard Process Instrumentation Terminology

7. MIL-STD Military Standard

MIL-STD-1472D	Human Engineering Design Criteria for Military Systems, Equipment and Facilities

8. NEMA National Electric Manufacturers Association

ICS 6-1983	Enclosures for Industrial Controls and Systems

9. NFPA National Fire Protection Association

70-90	National Electric Code

10. NUREG U.S. Nuclear Regulatory Commission

0700	Guidelines for Control Room Design Reviews

B. The edition for all codes and standards referred to in this specification shall be that edition in force at the time of specification approval by all parties.

C. In case of conflict, the more stringent standard shall apply.

1.04 SYSTEM DESCRIPTION

A. System Architecture

1. General

a. The system described in this specification shall be a modular microprocessor based digital plant control system and data management system that includes a comprehensive set of algorithms and auxiliaries providing full process and sequence control and monitoring, interlocking and other logic, alarm, and data management functions.

9412270319

b. The distributive control system shall oversee multiple PLC's.

2. <u>Distributed Architecture Control System Requirements</u>

a. A Distributed Architecture Control System shall be provided to orchestrate the movement of waste containers among the various operating stations and to monitor and control facility HVAC and utility systems.

b. The equipment used for the control system shall be standard, commercially available hardware which is part of a product line.

c. The Distributed Architecture Control System shall permit overall management and control of plant operation from a central control room.

d. The system shall have alarm processing, display, annunciation and printout capabilities. Alarm display and printout text are to be configurable from a menu driven entry system.

e. The system graphics symbols, CRT presentation and format shall use the same standard throughout the process displays. Graphics display terminals at the operator stations shall have the following video capabilities as a minimum:

- Process graphics display
- Sequence status display
- Alarm display
- Alarm group display
- Trend display
- Loop group display
- System diagnostics display

f. The control system shall provide regulatory closed loop control and sequential logic control.

g. The system shall use the same computer manufacturer's hardware family throughout its architecture.

h. The design shall accommodate future expansion of up to 25 percent of initial capability.

9413227.0320

i. System response time shall be 2 seconds or less measured at maximum communication network loading. That is, changes in plant parameters shall be displayed at operator terminals within 2 seconds of their occurrence when maximum network traffic is expected.

j. Human Engineering considerations shall be applied throughout the design process. The guidelines given in NUREG 0700, Sections 6.1, 6.3, 6.7 and 6.9; EPRI NP 3659, Chapter 4; and DOE 6430.1A Division 13 shall be used.

k. The system shall have battery backup memory or other methods to prevent loss of programs during temporary power loss.

3. <u>Computer Requirements</u>

a. The Data Management System (DMS) shall have the following capabilities:

- Retrieve from available databases and store information on all incoming waste containers.
- Track status of all incoming waste containers and contents as they are processed through the facility and maintain a database for in-process containers.
- Generate all permanent and backup records on magnetic media and hard copies, as appropriate.
- Generate all required certification data packages and shipping papers.
- Store and transmit data required by the Hanford SWITS data reporting requirements on each container.
- Identify location of all major waste containers within the facility.
- Interface to NDA instrumentation to receive and integrate assay data for waste classification and characterization.

9413227.0321

b. The DMS shall include the following equipment:

- A high performance office workstation for central processing and to act as system manager.
- Two office workstations for waste characterization input and system operation.
- Five data terminals with keyboards for waste characterization input and system operation.
- Three laser printers for generating shipping papers and system reports.

c. The DMS must be capable of interfacing with the Solid Waste Tracking System (SWITS) at Richland via the HLAN. The SWITS contains historical data on all waste containers buried at Hanford. The DMS must be capable of performing a data search in SWITS to extract the necessary pertinent data on the drums and boxes being received at WRAP.

d. The DMS must be capable of generating the data necessary for completing a Solid Waste Storage/Disposal Record (SWSDR). This form is required to accompany and Low Level Waste (LLW) package certified at WRAP and destined for burial at Hanford.

9413227.0322

PART 2 PRODUCTS

2.03 EQUIPMENT

A. DMS Computer

1. General: A separate stand alone computer system shall be provided to perform the functions described in Section 2.01.A.3. The computer system shall be a multi-tasking, multi-user micro-computer system.

2. Central Processing Unit (CPU): The central processing unit shall be capable of a minimum of 20 million instructions per second and shall have disk, memory and ethernet interface capacity and performance. A minimum of 32 megabytes of RAM memory shall be provided.

3. Storage Devices: The internal hard disk capacity shall be a minimum of 400 megabytes. An external drive shall be provided capable of storing 1 gigabyte, minimum.

4. Monitor and Keyboard: The DMS computer shall have a 19 inch color graphics screen with a minimum resolution of 600 X 800 pixels and standard 101 keyboard.

5. Communications: Communication among system components shall be by means of an internal local area network conforming to the IEEE 802.3 protocol.

6. Software: The system shall be provided with a minimum of the following software packages.

   - UNIX operating system
   - Compiler, Debugger, Linker
   - Database Management System
   - Other software necessary to interface the DMS with the process control, NDA, and offsite systems.

B. Data Terminals

1. Office Data Entry Terminals: The two office workstations shall be a 80386/33 CPU with 4 MB RAM and 200 MB hard drive, minimum. A 14 inch VGA monitor shall be supplied.

2. Process Data Entry Terminals: Data terminals shall be a 80386/30 CPU with 4 MB RAM and 80 MB hard drive, minimum. These terminals shall be supplied with a 14 inch VGA monitor and shall be industrial hardened.

B. Distributed Architecture Control System Controllers

1. General: Local control units (PLC's) shall provide continuous control and monitoring, independent of control room operator interfaces or communication network, by use of regulatory and sequential controllers. The local control units may consist of one or a combination of multi-loop regulatory and sequential controllers.

2. Regulatory Control: The system shall be designed so that control functions are distributed on a modular basis to distribute risk. Control functioning shall

9113227.0323

not depend on a centrally based device or communication system.

3. Sequential Control: The sequential controller shall be capable of implementing sequential control logic, interlock logic and discrete control functions without higher level support.

C. Power Supplies

1. 24 to 28 volt dc power supplies for field transmitters and digital inputs shall have current output sufficient to power 4-20 milliamperes analog inputs and digital inputs as contained in the I/O list of this specification. Failed power supplies shall have automatic switchover to a backup unit. Power supply failure contacts shall be provided to indicate failure of either the primary or backup unit.

2. Separate power supplies for digital and analog signal generation shall be provided.

D. I/O

1. General: The distributed control system shall be capable of handling the following input/output signals:

- 4-20 milliamperes Input
- 1-5 volts DC Input
- Field Contact State Input
- 3-Wire PNP Source/Sinking Transistor Input
- Digital Pulse Input
- Grounded/Ungrounded Thermocouple Input
- R.T.D Input
- Contact Output
- 120 VAC Output
- 4-20 milliamperes Output
- RS-232C Serial Link

2. System Size: The digital and analog input/output requirements of the distributed control system are as follows:

CONTROLLER	DI	DO	AI	AO
CNR-11-201	160	112	40	24
CNR-11-202	96	80	8	0
CNR-11-203	96	80	8	0
CNR-11-204	96	32	32	8
CNR-11-205	192	112	8	8
CNR-11-206	160	96	16	16
CNR-11-207	240	112	8	8
CNR-11-208	144	32	48	24
TOTAL:	1,184	656	168	88

All Digital I/O modules shall contain optical isolating devices providing 1200 volts DC or more isolation from user wiring or other I/O modules.

E. Communication Networks: Elements of the DCS shall be connected on a redundant, separately routed data highway compatible with linking to the Data Management System for a fully integrated Plant Management System.

F. Enclosures

1. General: Free standing cabinets shall be furnished by the vendor to house all electronic equipment such as controllers, multiplexers, power supplies, I/O modules and terminals. Racks and cabinets shall meet or exceed NEMA 4 requirements.

G. Control Room Consoles: The control room shall contain four consoles with both a graphics screen and a closed circuit television (CCTV) monitor for supervisory and control purposes. The CCTV monitors will be supplied by others. The division of responsibilities for the operators of these consoles shall be as follows.

Console #1: This is the Lead Operations Console. The operator at this station will be responsible for directing the flow of material throughout the plant. This includes all drums and boxes received at and shipped from WRAP 2. All

94M227.0325

facility monitoring of the plant via CCTV cameras other than those in the grout and Polymer Encaps. areas shall be done at this console.

Console #2: This is a Process Control Console for the grout area. That includes the Bulk Powder Storage, Vibro Grout System, and the Agitated Grout System. The operator here shall be resposible for all processes in these areas as well as monitoring some of the general process areas such as Off-Gas, Decon, Aqueous Makeup, and Act/Non-Act. Liq. Waste.

Console #3: This is the Process Control Console for the Polymer Encapsulation area and some of the general process areas. The operator here shall control the flow of drums, lift tables, vacuum dewatering enclosures, in-drum mixers, and the waste water transfer pump in the Poly. Encaps. area. Secondary duties are monitoring and providing control for such areas as Off-Gas, Decon, Aqueous Makeup, and Act/Non-Act. Liq. Waste.

Console #4: A Process Control Console for the Drum NDA area. Most of operators time will be spent sending and receiving info. to and from the NDA area. This will include entering isotopic data received from the NDA equipment into the records database.

H. <u>Process Operator Interfaces</u>: There shall be four OIT's (Operator Interface Units), each one stationed at one of four main process areas. Each of these areas has an operator locally controlling the process. These OIT's shall be used for process control and displaying status of equipment, etc. Each of these consoles shall contain a graphics screen. Room shall be provided on the console for a CCTV monitor, which will be supplied by others.

OIU #1: This unit is for the Shred & Repack area. Normal operation of the equipment in this area will be performed at this station.

OIU #2: This unit is for the Pug Mill area. Normal operation of the equipment in this area will be performed at this station.

9310.2227.0329

OIU #3: This unit is for the Special Waste area (Lead and Mercury). Normal operation of the equipment in this area will be performed at this station.

I. Printers: Postscript laser printers shall be used with the Computer Room and Sample Management Office workstations. These printers shall have a minimum of 2 megabyte memory and be capable of printing 10 ppm minimum.

END OF SECTION

9113227.0327

THIS PAGE INTENTIONALLY LEFT BLANK

THIS PAGE INTENTIONALLY
LEFT BLANK

SECTION 13462

94/3227.0328

THIS PAGE INTENTIONALLY
LEFT BLANK

THIS PAGE INTENTIONALLY
LEFT BLANK

WRAP MODULE 2A

SPECIFICATION SECTION
FOR
13462 PLANT MANAGEMENT SYSTEM SOFTWARE

TABLE OF CONTENTS

PART 1 GENERAL

1.01 SECTION SCOPE
1.02 RELATED SECTIONS
1.03 REFERENCES
1.04 SYSTEM DESCRIPTION
1.05 SUBMITTALS
1.06 DELIVERY, STORAGE AND HANDLING
1.07 SITE CONDITIONS

PART 2 PRODUCTS

2.01 MANUFACTURERS
2.02 MATERIALS
2.03 EQUIPMENT
2.04 COMPONENTS
2.05 FABRICATION
2.06 SHOP QUALITY CONTROL

PART 3 EXECUTION

3.01 PREPARATION
3.02 ERECTION, INSTALLATION AND APPLICATION
3.03 FIELD QUALITY CONTROL
3.04 ADJUSTING AND CLEANING
3.05 DEMONSTRATION
3.06 PROTECTION

WRAP MODULE 2A

SECTION 13462

PLANT MANAGEMENT SYSTEM SOFTWARE

PART 1 GENERAL

1.01 SECTION SCOPE

A. This specification covers design, construction, verification, installation and validation requirements for software for a distributed control system and data acquisition system for the Plant Management System (PMS). The PMS will be provided and utilized to satisfy five basic objectives; (1) data acquisition, (2) data analysis, (3) process system surveillance, (4) inventory control, and (5) control and surveillance of building utilities and HVAC.

9413227.0330

1.02 RELATED SECTIONS

1.03 REFERENCES

A. American National Standards Institute (ANSI)
N Designation (Nuclear Related Standards)

B. Electric Power Research Institute (EPRI)

NP-3659 Chp. 4	Recommended Panel Design Features

C. Institute of Electrical and Electronic Engineers (IEEE)

D. Instrument Society of America (ISA)

ISA-RP60.8	Electrical Guide for Control Centers
ISA-S5.1	Instrumentation Symbols and Identification
ISA-S5.3	Graphic Symbols for Distributed Control/Shared Display Instrumentation, Logic and Computer Systems
ISA-S5.4	Instrument Loop Diagrams
ISA-S5.5	Graphic Symbols for Process Displays
ISA-S18.1	Annunciator Sequences and Specifications
ISA-S51.1	Standard Process Instrumentation Terminology

E. MIL-STD Military Standard
MIL-STD-1472D Human Engineering Design Criteria for Military Systems, Equipment and Facilities

F. National Fire Protection Association (NFPA)
70-90 National Electric Code

G. U.S. Nuclear Regulatory Commission (NUREG)
0700 Guidelines for Control Room Design Reviews

H. All products and services covered by these specifications shall be designed, constructed, provided, installed and tested in accordance with all currently approved provisions of the following codes, standards and regulations, in force at the time of purchase order issuance.

I. The edition for all codes and standards referred to in this Specification shall be that edition in force at the time of Specification Approval by all parties.

J. In case of conflict, the more stringent standard shall apply.

1.04 SYSTEM DESCRIPTION

A. Functional Requirements: Software programs shall be provided to perform the requirements as described in the following Functional Description.

Legend

C	Control System
CO	Control System (Operator Initiated)
D	Data Management System
W	Hardwired
M	Manual
V	Vendor

1. Process Waste Drums

Receive Drum

Pallets Placed On Accum. Conveyor	M
Depalletize and Place on Drum Scale	W
Read Bar Code Label on Drum	C

9H 9227.031

Weigh Drum	C
Input Weight into DMS	D
Convey Drum Through Airlock onto Transfer Care/AG-V	C

Open and Sample

AGV Takes Drum to Sample Management Enclosure	VC
Read Drum Bar Code Label	CD
Lift Drum into Enclosure	CO
Remove Lid	M
Mechanically Grab Sample	M
Prepare Sample Container and Attach Bar Code	M
Log Documentation into Data Terminal	D
AGV Returns Drum to Lag Storage	VC

Drum Storage

Drum is Stored by Auto Stacker/Retriever	VD
Drum is Tracked in Storage	VD
Drum is Retrieved from Auto Stacker/Retriever	VD

Empty, Sort and Repack

Transfer Car Takes Drum from Airlock to Enclosure	VC
Read Drum Bar Code Label	CD
Lift Drum into Enclosure	CO
Remove Drum Lid	C
Drum Lifted and Contents are Dropped onto Sort Table	C
Noncompliant Pieces are Grabbed by Manipulators	W
Sort Table Tips Waste onto Vibrating Conveyor	CO
Waste is Conveyed into Weigh Hopper	CO
Drum Filled with Weighed Amount of Waste	C
Read Bar Code Label on Drum	C
Input Weight into DMS	D
Lift Table is Lowered	CO
AGV Takes Drum to Storage	VD

Size Reduce and Repack

Transfer Car Takes Drum From Airlock to Enclosure	VC
Read Drum Bar Code Label	CD
Lift Drum into Enclosure	CO
Remove Drum Lid	C
Drum Lifted and Contents are Dropped onto Sort Table	C

9413227.0332

Noncompliant Pieces are Grabbed by Manipulators	W
Sort Table tips Waste into Shredder	CO
Material Shredded	C
Conveyed into Weigh Hopper	C
Drum Filled with Weighed Amount of Waste	C
Read Bar Code Label on Drum	C
Input Weight into DMS	D
Lift Table is Lowered	CO
AGV Takes Drum to Storage	VD

Pug Mill

Transfer Car Takes Drum from Airlock to Enclosure	VC
Read Drum Bar Code Label	CD
Lift Drum into Enclosure	CO
Remove Drum Lid	C
Drum Lifted and Contents are Dropped onto Sort Table	C
Noncompliant Pieces are Grabbed By Manipulators	W
Sort Table tips Waste into Pug Mill	CO
Pug Mill Conveys Waste to Weigh Hopper	C
Drum Filled with Weighed Amount of Waste	C
Read Bar Code Label on Drum	C
Input Weight into DMS	D
Lift Table is Lowered	CO
AGV Takes Drum to Storage	VD

Special Process

Transfer Car Takes Drum from Airlock to Lift Table	VC
Drum Lifted and Contents are Dropped Onto Sort Table	C
Empty Drum is Lowered Back to Lift Table	C
Drum is Transferred to Lift Table	CV
Empty Used Drum is Taken to Shred and Repack	VC

Lead Bricks

Manipulator Puts Lead Bricks into Basket	W
Basket Placed into New Drum	W
Drum Lid is Put on	C
Read Bar Code Label on Drum	C
Drum is Weighed	C
Input Weight into DMS	D
Lift Table is Lowered	C
Drum is Conveyed onto AGV	C
Drum Taken to Polymer Encapsulation	VD

9413227.0333

WRAP MODULE 2A

Elemental Mercury

Manipulator Puts Mercury Flasks into Basket	W
Basket Taken to Amalgamation Enclosure	VC
Flask Goes through Airlock	C
Flask Contents are Dumped into Amalgamate Bottle	C
Amalgamated Mercury in Bottles is Taken to Shredder Enclosure	C
Drum Lid is Put on	C
Read Bar Code Label on Drum	C
Drum is Weighed	C
Input Weight into DMS	D
Lift Table Lowers Drum	C
Drum is Conveyed onto AGV	C
AGV Takes Drum to Polymer Encapsulation	VC

Mercury Contaminated Solids

Mercury Contaminated Solids Dumped Into Shredder	W
Solids Are Shredded and Collected in Discharge Bin	C
Solids are Fed from Discharge Bin Into Mercury Evaporator	C
Pretreated Solids are Dropped into New Drum	C
Evaporated Mercury Collected in Flasks and Taken to Amalg	C
Drum Lid is Put on	C
Read Bar Code Label on Drum	C
Drum is Weighed	C
Input Weight into DMS	D
Lift Table is Lowered	C
Drum is Conveyed onto AGV	C
AGV Takes Drum to Polymer Encapsulation	VC

Lead Contaminated Solids

Lead Contaminated Solids Dumped into Shredder	W
Solids are Shredded	C
Solids Go through Discharge Bin into New Drum	C
Drum Lid is Put on	C
Read Bar Code Label on Drum	C
Drum is Weighed	C
Input Weight into DMS	D
Lift Table is Lowered	C
Drum is Conveyed onto AGV	C
AGV Takes Drum to Polymer Encapsulation	VC

WRAP MODULE 2A

Empty Used Drums from Sort and Repact and Special Processes

Drum is Lowered to AGV	C
Drum is Relidded	C
AGV Takes Drum to Lag Storage	CV
Drum is Stored	VD
AGV Takes Drum to Size Reduce and Repack	CV
Read Drum Bar Code Label	VC
Enter Container ID into DMS	D
Lift Drum and Convey into Shredder	CO

Reactive Metals Pretreatment

Drums Brought by AGV from Storage	VD
Drums Conveyed through Airlock	C
Lift Table Raises Drum	CO
Drum Handler Loads Drum Contents Into Feed Hopper	CO
Vibrating Screen Separates and Deactivates Metal Flues	C
Metals are Conveyed into Discharge Bin	C
Contents are Dropped into New Drum	C
Drum Lid is Replaced	C
Drum Bar Code Label is Read	C
Drum is Weighed	C
Drum Weight is Entered into DMS	D
Lift Table is Lowered	C
Drum is Conveyed onto AGV	VC
AGV Takes Drum to Polymer Encapsulation	VC

NDA

Drums Brought from Lag Storage by AGV	V
Drum is Conveyed onto Weigh Scale	CV
Bar Code Label is Read	C
Drum is Weighed	C
Weight is Entered into DMS	D
Drum is Conveyed into PAN Enclosure	C
Drum is Assayed	V
Drum is Conveyed Out of PAN Enclosure	C
Transfer Car Takes Drum to GEA Conveyor	V
Bar Code Label is Read	C
Drum Conveyed into GEA Enclosure	C
Drum is Assayed	V
Drum is Conveyed Out	C
AGV Takes Drum to Lag Storage	VD

WRAP MODULE 2A

Grouting

Bulk Powder Storage

Bulk Powder Loaded From Truck Into Bulk Silo	M
Bulk Silo Rotary Feeder Feeds Powder Into Air Slide	C
Powder Pneumatically Pumped from Bulk to Indoor Silos	CO
Polymer Additive Drum is Brought by AGV	VC
Polymer Additive is Pumped from Drum to Grout Area	CO

Vibro Grout

Powder from Bulk Silos	CO
Rotary Feeder Feeds Powders to Weigh Hoppers	C
Screw Conveyor Feeds Powders to Wet Grout Mixing Tank	C
Wet Grout Tank Mixes Powders, Polymer Add. & Process Water	C
Wet Grout is Pumped into Drum	C
AGV Brings Drum to Grout Enclosure	V
Drum Indexed onto Conveyor	CV
Drum Conveyed through Airlock	C
Drum is Conveyed onto Lift Table	C
Lift Table Lifts Drum	C
Drum is Delidded	C
Grout is Added	C
Vibrating Drum Mixer Mixes Contents	C
Drum Lid is Put on	C
Read Bar Code Label on Drum	C
Lift Table Lowers Drum	C
Drum is Conveyed into Curing Zone	CV
Cured Drum is Conveyed to Inspection	VC

Agitated Grout

Bulk Powder From Bulk Silo	CO
Rotary Feeder and Screw Conveyor Feeds Powder to Surge Hopper	C
Powder is Fed from Surge Hopper to Blended Powder Batch Weigh Hopper Via Rotary Feeder and Ribbon Blender Screw Conveyor	C
Blended Powder is Fed from Blended Powder Batch Weigh Hopper into Drum Via Rotary Feeder and Screw Conveyor	C
Recycled Water and Polymer Additive are Pumped into Drum	C
AGV Brings drum to Grout Enclosure	V
Drum Indexed onto Conveyor	CV
Drum Conveyed through Airlock	C
Drum is Conveyed onto Lift Table	C
Lift Table Lifts Drum	C
Drum is Delidded	C

9413227.0336

WRAP MODULE 2A

Agitator is Engaged	C
Water is Added	C
Agitator Mixes Contents	C
Grout is Added	C
Drum Lid is Replaced	C
Read Bar Code Label on Drum	C
Lift Table Lowers Drum	C
Drum is Conveyed into Curing Zone	CV
Drums Cure	VC
Cured Drum is Conveyed to Inspection Point	C

Drum Inspection and Monitoring

Rollers Convey Drum to Lift Table	VC
Lift Table Raises Drum	C
Drum is Delidded	C
Excess Water is Pumped from Drum	C
Drum is Relidded	C
Lift Table is Lowered	C
Drum is Swabbed for Activity	M
Drum is Decontaminated if Necessary	CO
Drum Lid is Replaced	M
Drum Exits via Airlock	C
AGV Takes Drum from Roller to Lag Storage	VC

<u>Polymer Encapsulation</u>

Stirred/Vibrated Mixing

Drum is Brought by AGV	VC
Drum is Loaded onto Lift Table	VC
Lift Table Raises Drum	C
Drum Lid is Removed	C
Mixer is Attached	C
Polymer and Catalyst are Added to Drum	C
In-Drum Mixer or Vibratory Mixer is Turned on	C
Mixer is Turned off	C
Drum Lid Is Replaced	C
Lift Table Lowers Drum	C
Drum is Conveyed onto AGV	VC
AGV Takes Drum to Cure Storage	VC

WRAP MODULE 2A

Vacuum Dewatering

Drum is Brought by AGV	VC
Drum is Loaded onto Lift Table	VC
Lift Table Raises Drum	C
Drum Lid is Removed	C
Polymer and Cataloyst are Added to Drum	C
Vacuum is Drawn on Drum and Water is Pumped from Drum	C
Drum Lid is Replaced	C
Lift Table Lowers Drum	C
Drum is Conveyed onto AGV	VC
AGV Takes Drum to Cure Storage	VC

9413227.0338

Transfer

AGV Brings Drum from Cure Store	VC
AGV Loads Drum onto Conveyor	VC
Drum is Conveyed through Airlock	C
Read Bar Code Label on Drum	C
Drum is Weighed	C
Input Weight into DMS	D
Manipulator Lifts Drum onto Pallet	W
Forklift Takes Pallet Away	M

2. Process Waste Boxes

Receive Box

REad Box Bar Code Label	M
Input Box Container ID into DMS	D
Forklift Place Box on Conveyor	M
Box is Conveyed through First Airlock	C
Box is Conveyed through Second Airlock	C

Open and Sort

Box is Lifted off Conveyor	W
Manipulator Breaks Down Box	W
Manipulator Places Box Material into Drum	W
Drum Lid is Added	CO
Read Bar Code Label on Drum	C
Drum is Weighed	C
Input Weight into DMS	D
Drum Transferred onto Transfer Car	C

3. New Drums

Receive New Drum

Forklift Places New Drum onto Conveyor	M
Bar Code Label is Printed	D
Bar Code Label is Attached to Drum	M
Drum is Conveyed through Airlock	C
Drum is Indexed onto AGV	CV
AGV Takes Drum to Area Needed	V
Drum is Loaded onto Lift Table	VC
Lift Table is Raised	C
Drum Lid is Removed	C

4. Operate HVAC

Control Temperature

Provide On/Off Control	C
Provide Setpoint Reset	C

Control Humidity

Provide Setpoint Reset	C

Control Area Pressures

Provide Setpoint Reset	C

Display System Status

Display On/Off Status	C
Display Monitored Parameters	C

Process Alarms

Configure Alarms	C
Annunciate Alarms	C
Display Alarms	C
Print Alarm	C

9413227.0339

Provide Interlocks

Prevent Startup	C
Provide Automatic Shutdown	C

5. Monitor Utilities

Monitor Electrical System

Display Status	C
Process Alarms	C

Monitor Compressed Air Systems

Display Status	C
Process Alarms	C

6. Monitor Facility

Process Fire Alarms

Display Status	C
Process Alarms	C
Report to CASS	C

Monitor Stack Effluent

Display Status	C
Process Alarms	C
Report to CASS	C
Archive Measurement Data	C

Monitor Area Radiation

Display Status	C
Process Alarms	C
Report to CASS	C
Archive Measurement Data	C

9413227.0340

7. Inventory Personnel

Track Personnel Occupancy

Store Personnel Occupancy Data C

Report Personnel Occupancy

Print Personnel Occupancy Data C

B. External Interface Requirements

- User Interfaces
- Hardware Interfaces
- Software Interfaces
- Communication Interfaces

C. Performance Requirements

D. Design Constraints

- Standards Compliance
- Hardware Limitations

E. Attributes

- Security
- Maintainability
- Etc.

F. Other Requirements

- Database
- Operations
- Site Adaptation
- The software supplied with the PMS shall have the following features:

  1. Security and access into the system shall be controlled to restrict access to different levels consistent with the user's need for access.

  2. Modular programming techniques shall be used. Wherever possible, commercially available packages shall be used to reduce the amount of custom lower level code generation.

3. User friendly menus shall be used as a means of operator interface. The system shall be easy to use.

4. The code shall have diagnostics and self checking capabilities to detect incomplete and/or erroneous data entry.

5. The software shall be maintainable by plant personnel and completely documented.

6. Updates to the applications programs shall be capable of being installed by plant personnel. Updates shall not result in the loss of stored plant parameter or configuration data.

7. Power loss recovery feature shall be included.

END OF SECTION

9413227.0342

SECTION 13531

9/4/3227.0343

THIS PAGE INTENTIONALLY
LEFT BLANK

THIS PAGE INTENTIONALLY
LEFT BLANK

WRAP MODULE 2A

SPECIFICATION SECTION
FOR
13531 NON-DESTRUCTIVE ASSAY EQUIPMENT

TABLE OF CONTENTS

PART 1 GENERAL

1.01 SECTION SCOPE
1.02 RELATED SECTIONS
1.03 REFERENCES
1.04 SYSTEM DESCRIPTION
1.05 SUBMITTALS
1.06 DELIVERY, STORAGE AND HANDLING
1.07 SITE CONDITIONS

PART 2 PRODUCTS

2.01 MANUFACTURERS
2.02 MATERIALS
2.03 EQUIPMENT
2.04 COMPONENTS
2.05 FABRICATION
2.06 SHOP QUALITY CONTROL

PART 3 EXECUTION

3.01 PREPARATION
3.02 ERECTION, INSTALLATION AND APPLICATION
3.03 FIELD QUALITY CONTROL
3.04 ADJUSTING AND CLEANING
3.05 DEMONSTRATION
3.06 PROTECTION

APPENDIX

APPENDIX A DATA SHEETS

WRAP MODULE 2A

SECTION 13531

Non-Destructive Assay Equipment

PART 1 GENERAL

1.01 SECTION SCOPE

A. This specification establishes the requirements for detailed design, fabrication, installation, start-up, and acceptance testing of Non-Destructive Assay Equipment For WRAP Module 2A Facility.

1.02 RELATED SECTIONS

1.03 REFERENCES

A.	NEC	National Electric Code
B.	UL	Underwriters Laboratory

1.04 SYSTEM DESCRIPTION

A. Provide equipment necessary to perform Passive/Active Neutron (PAN) and Gamma Energy Assay (GEA) of waste material in 55 gallon drums of up to 1000 lbs. capacity. The requirement is to adequately characterize the waste category prior to further treatment.

B. Data Sheets

Equipment Tag Nos. WBS Area Location Numbers and equipment data sheets for this description are provided in **Appendix A.**

END OF SECTION

WRAP MODULE 2A

APPENDIX A

EQUIPMENT/INSTRUMENT DATA SHEETS

WBS LOCATION	EQUIPMENT TAG	SERVICE
1109	ND-09-201	PAN Scan
1109	ND-09-202	PAN Scan
1109	ND-09-203	GEA Scan
1109	ND-09-204	GEA Scan
1109	ND-09-205	System Integration Equipment

9413227.0346

April 1992

UE&C PROJECT NO. 6237.006

FILE NO. 13531 - A1

UNITED ENGINEERS & CONSTRUCTORS A Raytheon Company Western Operations	EQUIPMENT DATA SHEET ☒ CDR ☐ TITLE I ☐ TITLE II ☐ TITLE III	ITEM NUMBER ND-09-201	PAGE 1 OF 1

CUSTOMER & LOCATION	PROJECT	UE&C JOB NO. 6237.006	DATE: 04/22/92
DOE-RL/WHC HANFORD, WA	WRAP FACILITY MODULE 2A	ACCOUNT NO.	BY: ANW

REVISIONS (DATE & BY)	A		B		C		D	
	E		F		G		H	

SERVICE	MANUFACTURER	NO. REQ'D.	SOURCE OF QUOTE
DRUM PASSIVE/ACTIVE NEUTRON (PAN)		1	

DRUM PASSIVE/ACTIVE NEUTRON ASSAY

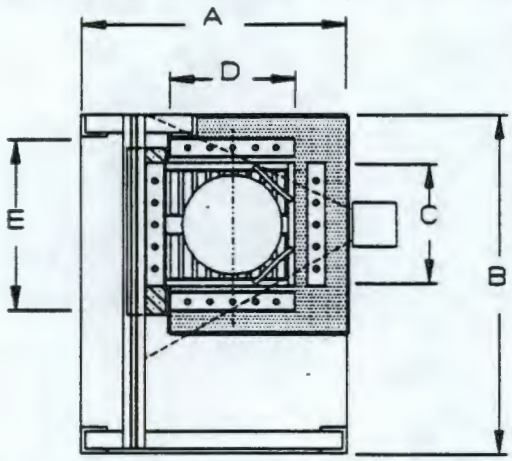

CONDITIONS OF SERVICE		DIMENSIONS	
APPLICATION: UNDERTAKES NEUTRON INTERROGATION OF DRUMS AS PART OF THE NDA		A: 6'-0"	F:
UNIT LOAD DESCRIPTION: 55 GALLON DRUMS CONTAINING REPACKED LLRMW		B: 7'-8"	G:
UNIT LOAD SIZE: 22.5" DIA X 34.5" HIGH	DUTY: 8 HRS/DAY	C: 2'-10"	H:
UNIT LOAD WEIGHT: UP TO 1,000 LBS	NEL AREA CLASS: 6 DRUMS/HR	D: 2'-10"	I:
UNIT TRU CONTENT: UP TO 100 nCi/g	LIMIT OF DETECT REQ.: 5 nCi/g (INCL GROUT)	E: 4'-0"	J:
UNIT EXPOSURE: UP TO 200 mR/HR	ACCURACY REQ.: 30% AT 10 nCi/g		
IMPACT LOADING: MODERATE	AVAILABLE POWER: 480V/3PH/60 HZ; 120V/1PH/60 HZ		
LOCATION: NDA ROOM			
CONSTRUCTION			
MECH INTERFACE: TRANSFER CONVEYOR CV-08-101	NORMAL CONTROL: CONTROL RM/AUTOMATIC		
DMS INTERFACE: LAN TO ANSI/IEEE STD 802.3	MAINTENANCE CONTROL: VIA LOCAL PANEL		
OTHER INTERFACES: TO SYSTEM INTEGRATION EQUIP	EMERGENCY STOP: REQUIRED		
MATERIALS: MANUFACTURER'S STANDARD			

9413227.0347

UNITED ENGINEERS & CONSTRUCTORS A Raytheon Company Western Operations	EQUIPMENT DATA SHEET ☒ CDR ☐ TITLE I ☐ TITLE II ☐ TITLE III	ITEM NUMBER ND-09-203	PAGE 1 OF 1

CUSTOMER & LOCATION	PROJECT	UE&C JOB NO. 6237.006	DATE: 04/22/92
DOE-RL/WHC HANFORD, WA	WRAP FACILITY MODULE 2A	ACCOUNT NO.	BY: ANW

REVISIONS (DATE & BY)	A		B		C		D	
	E		F		G		H	

SERVICE	MANUFACTURER	NO. REQ'D.	SOURCE OF QUOTE
DRUM GAMMA ENERGY ASSAY (GEA)		1	

DRUM GAMMA ENERGY ASSAY

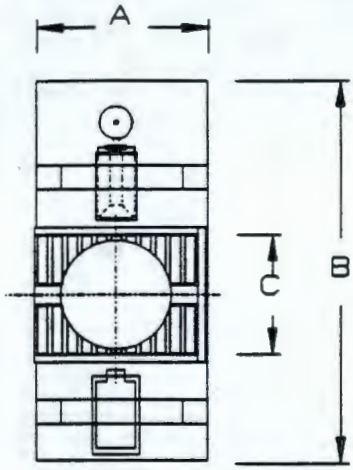

CONDITIONS OF SERVICE		DIMENSIONS	
APPLICATION: UNDERTAKES GAMMA ENERGY INTERROGATION OF DRUMS AS PART OF THE NDA		A: 3'-6"	F:
UNIT LOAD DESCRIPTION: 55 GALLON DRUMS CONTAINING REPACKED LLRMW		B: 7'-10"	G:
UNIT LOAD SIZE: 22.5" DIA X 34.5" HIGH	DUTY: 8 HRS/DAY	C: 2'-6"	H:
UNIT LOAD WEIGHT: 1,000 LBS	NEL AREA CLASS: 6 DRUMS/HR	D:	I:
UNIT TRU CONTENT: UP TO 100 nCi/g	LIMIT OF DETECT REQ.: LLW CATEGORY 1	E:	J:
UNIT EXPOSURE: UP TO 200 mR/HR	ACCURACY REQ.:		
IMPACT LOADING: MODERATE	NEC AREA CLASS: UNCLASSIFIED		
LOCATION: NDA ROOM	AVAILABLE POWER: 460V/3PH/60 HZ; 120V/1PH/60 HZ		
CONSTRUCTION			
MECH INTERFACE: TRANSFER CONVEYOR CV-08-103	NORMAL CONTROL: CONTROL RM/AUTOMATIC		
DMS INTERFACE: LAN TO ANSI/IEEE STD 802.3	MAINTENANCE CONTROL: VIA LOCAL PANEL		
OTHER INTERFACES: TO SYSTEM INTEGRATION EQUIP	EMERGENCY STOP: REQUIRED		
MATERIALS: MANUFACTURER'S STANDARD			

9413227.0348

UNITED ENGINEERS & CONSTRUCTORS A Raytheon Company Western Operations	EQUIPMENT DATA SHEET ☒ CDR ☐ TITLE I ☐ TITLE II ☐ TITLE III	ITEM NUMBER ND-09-204	PAGE 1 OF 1

CUSTOMER & LOCATION	PROJECT	UE&C JOB NO. 6237.006	DATE: 04/22/92
DOE-RL/WHC HANFORD, WA	WRAP FACILITY MODULE 2A	ACCOUNT NO.	BY: ANW

REVISIONS (DATE & BY)	A		B		C		D	
	E		F		G		H	

SERVICE	MANUFACTURER	NO. REQ'D.	SOURCE OF QUOTE
DRUM GAMMA ENERGY ASSAY (GEA)		1	

DRUM GAMMA ENERGY ASSAY

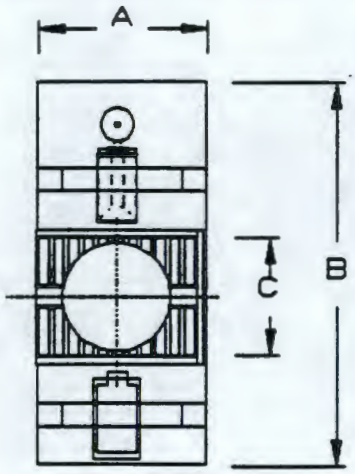

CONDITIONS OF SERVICE		DIMENSIONS	
APPLICATION: UNDERTAKES GAMMA ENERGY INTERROGATION OF DRUMS AS PART OF THE NDA		A: 3'-6"	F:
UNIT LOAD DESCRIPTION: 55 GALLON DRUMS CONTAINING REPACKED LLRMW		B: 7'-10"	G:
UNIT LOAD SIZE: 22.5" DIA X 34.5" HIGH	DUTY: 8 HRS/DAY	C: 2'-6"	H:
UNIT LOAD WEIGHT: 1,000 LBS	NEL AREA CLASS: 6 DRUMS/HR	D:	I:
UNIT TRU CONTENT: UP TO 100 nCi/g	LIMIT OF DETECT REQ.: LLW CATGORY 1	E:	J:
UNIT EXPOSURE: UP TO 200 mR/HR	ACCURACY REQ.:		
IMPACT LOADING: MODERATE	NEC AREA CLASS: UNCLASSIFIED		
LOCATION: NDA ROOM	AVAILABLE POWER: 460V/3PH/60 HZ; 120V/1PH/60 HZ		
CONSTRUCTION			
MECH INTERFACE: TRANSFER CONVEYOR CV-08-104	NORMAL CONTROL: CONTROL RM/AUTOMATIC		
DMS INTERFACE: LAN TO ANSI/IEEE STD 802.3	MAINTENANCE CONTROL: VIA LOCAL PANEL		
OTHER INTERFACES: TO SYSTEM INTEGRATION EQUIP	EMERGENCY STOP: REQUIRED		
MATERIALS: MANUFACTURER'S STANDARD			

UNITED ENGINEERS & CONSTRUCTORS A Raytheon Company Western Operations	EQUIPMENT DATA SHEET ☒ CDR ☐ TITLE I ☐ TITLE II ☐ TITLE III	ITEM NUMBER ND-09-202	PAGE 1 OF 1

CUSTOMER & LOCATION	PROJECT	UE&C JOB NO. 6237.006	DATE: 04/22/92
DOE-RL/WHC HANFORD, WA	WRAP FACILITY MODULE 2A	ACCOUNT NO.	BY: ANW

REVISIONS (DATE & BY)	A		B		C		D	
	E		F		G		H	

SERVICE	MANUFACTURER	NO. REQ'D.	SOURCE OF QUOTE
DRUM PASSIVE/ACTIVE NEUTRON (PAN)		1	

DRUM PASSIVE/ACTIVE NEUTRON ASSAY

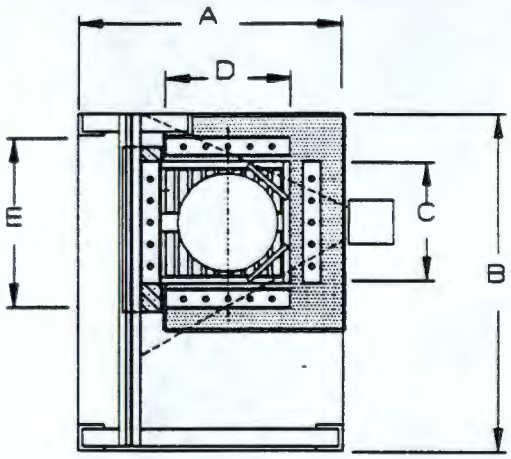

CONDITIONS OF SERVICE		DIMENSIONS	
APPLICATION: UNDERTAKES NEUTRON INTERROGATION OF DRUMS AS PART OF THE NDA		A: 6'-0"	F:
UNIT LOAD DESCRIPTION: 55 GALLON DRUMS CONTAINING REPACKED LLRMW		B: 7'-8"	G:
UNIT LOAD SIZE: 22.5" DIA X 34.5" HIGH	DUTY: 8 HRS/DAY	C: 2'-10"	H:
UNIT LOAD WEIGHT: UP TO 1,000 LBS	NEL AREA CLASS: 6 DRUMS/HR	D: 2'-10"	I:
UNIT TRU CONTENT: UP TO 100 nCi/g	LIMIT OF DETECT REQ.: 5 nCi/g (INCL GROUT)	E: 4'-0"	J:
UNIT EXPOSURE: UP TO 200 mR/HR	ACCURACY REQ.: 30% AT 10 nCi/g		
IMPACT LOADING: MODERATE	AVAILABLE POWER: 460V/3PH/60 HZ; 120V/1PH/60 HZ		
LOCATION: NDA ROOM			
CONSTRUCTION			
MECH INTERFACE: TRANSFER CONVEYOR CV-06-102	NORMAL CONTROL: CONTROL RM/AUTOMATIC		
DMS INTERFACE: LAN TO ANSI/IEEE STD 802.3	MAINTENANCE CONTROL: VIA LOCAL PANEL		
OTHER INTERFACES: TO SYSTEM INTEGRATION EQUIP	EMERGENCY STOP: REQUIRED		
MATERIALS: MANUFACTURER'S STANDARD			

9413227.0350

UNITED ENGINEERS & CONSTRUCTORS A Raytheon Company Western Operations	EQUIPMENT DATA SHEET ☒ CDR ☐ TITLE I ☐ TITLE II ☐ TITLE III	ITEM NUMBER ND-09-205	PAGE 1 OF 1

CUSTOMER & LOCATION	PROJECT	UE&C JOB NO. 6237.006	DATE: 04/22/92
DOE-RL/WHC HANFORD, WA	WRAP FACILITY MODULE 2A	ACCOUNT NO.	BY: ANW

REVISIONS (DATE & BY)	A		B		C		D	
	E		F		G		H	

SERVICE (NDA) SYSTEM INTEGRATION	MANUFACTURER	NO. REQ'D. 1	SOURCE OF QUOTE

SYSTEM INTEGRATION

CONDITIONS OF SERVICE		DIMENSIONS	
APPLICATION: INTEGRATES DATA OBTAINED FROM PAN, GEA & EXTERNAL DATA TO CATGORIZE THE WASTE		A:	F:
UNIT LOAD DESCRIPTION: N/A		B:	G:
UNIT LOAD SIZE: N/A	DUTY: 8 HRS/DAY	C:	H:
UNIT LOAD WEIGHT: N/A	NEL AREA CLASS: 12 DRUMS/HR 24 DATA DUMPS/HR	D:	I:
UNIT TRU CONTENT: N/A	LIMIT OF DETECTION REQ.: N/A	E:	J:
UNIT EXPOSURE: UP TO 200 mR/HR	ACCURACY REQ.: N/A		
IMPACT LOADING: LIGHT	NEC AREA CLASS: UNCLASSIFIED		
LOCATION: NDA ROOM	AVAILABLE POWER: 120V/1PH/60 HZ		
CONSTRUCTION			
MECH INTERFACE: N/A			
DMS INTERFACE: LAN TO ANSI/IEEE STD 802.3			
OTHER INTERFACES: TO PAN UNITS (2) & GEA UNITS (2)			
NORMAL CONTROL: CONTROL ROOM/AUTOMATIC			
MAINTENANCE CONTROL: VIA LOCAL PANEL			
MATERIALS: MANUFACTURER'S STANDARD			

WRAP MODULE 2A

DIVISION 14 - CONVEYING SYSTEMS

TABLE OF CONTENTS

SECTION	DESCRIPTION
14053	DRUM HANDLING/TIPPING
14054	SORTING AND TIPPING TABLES
14450	FORK LIFT TRUCK
14470	SCISSOR LIFT TABLE
14510	AUTOMATIC GUIDED VEHICLE
14550	CONVEYING SYSTEMS (CONTAINER AND BULK)
14551	GROUTING STABILIZATION CONVEYING SYSTEM
14590	GROUTING AGENTS BULK STORAGE AND HANDLING
14592	DRUM PUSHER
14593	PUG MILL
14594	WASTE TRANSFER DEVICES
14595	CONTAINER TRANSFER CARRIAGE
14596	TRANSFER BASKET
14600	HOIST AND CRANE
14620	AUTOMATIC STORAGE/RETRIEVAL

9113227.0352

THIS PAGE INTENTIONALLY
LEFT BLANK

SECTION 14053

PM 3227.0353

THIS PAGE INTENTIONALLY
LEFT BLANK

WRAP MODULE 2A

SPECIFICATION SECTION
FOR
14053 DRUM HANDLING/TIPPING

TABLE OF CONTENTS

PART 1 GENERAL

1.01 SECTION SCOPE
1.02 RELATED SECTIONS
1.03 REFERENCES
1.04 SYSTEM DESCRIPTION
1.05 SUBMITTALS
1.06 DELIVERY, STORAGE & HANDLING
1.07 SITE CONDITIONS

PART 2 PRODUCTS

2.01 MANUFACTURERS
2.02 MATERIALS
2.03 EQUIPMENT
2.04 COMPONENTS
2.05 FABRICATION
2.06 SHOP QUALITY CONTROL

PART 3 EXECUTION

3.01 PREPARATION
3.02 ERECTION, INSTALLATION & APPLICATION
3.03 FIELD QUALITY CONTROL
3.04 ADJUSTING AND CLEANING
3.05 DEMONSTRATION
3.06 PROTECTION

APPENDIX

APPENDIX A DATA SHEETS

WRAP MODULE 2A

SECTION 14053

DRUM HANDLING/TIPPING

PART 1 GENERAL

1.01 SECTION SCOPE

A. This specification establishes the requirements for detailed design, fabrication, installation, start-up, and acceptance testing of Drum Tilt Mechanism for WRAP Module 2A Facility.

1.02 RELATED SECTIONS

1.03 REFERENCES

A. Anti-Friction Bearing Manufacturer's Association
AFBMA All applicable sections.

B. American National Standards Institute
ANSI All applicable sections.

C. American Society for Testing and Materials
ASTM All applicable sections.

D. American Welding Society
AWS D1.1 "Structural Welding Code"

E. Occupational Safety and Health Administration
OSHA 29 CRF Part 1910

F. National Electric Code
NEC All applicable sections.

G. National Electric Manufacturers Association
NEMA MG-1 Motors and Generators

H. American Gear Manufacturers Association
AGMA All applicable sections.

I. Mechanical Power Transmission Association
MPTA ND 301 All applicable sections.

9413227.0355

1.04 SYSTEM DESCRIPTION

A. Govern Description

Drums of waste are passed along a conveyor to a position at the base of the Drum Handler, the clamp holds the drum while it is raised to the high level tipping location. The hydraulic rotation mechanism rotates the drum/clamp assembly to discharge the contents of the drum. When the drum is empty, the rotator returns the drum to the vertical position before he assembly is lowered back onto the conveyor at low level.

B. Construction

1. The equipment is manufactured in carbon steel and consists of three assemblies:

   - Lifting Assembly
   - Drum Clamp
   - Hydraulic Rotator

2. The lifting assembly is operated by a lead screw driven by an electric motor/gearbox arrangement. Guides support the load during raising and lowering of the drum.

3. The drum clamp is hydraulically operated and holds the drum using a scissor action during raising and lowering operations.

4. The clamp is mounted on the vertical slider which incorporates the hydraulic rotating mechanism for tipping the drum.

C. Control and Instrumentation

1. The drives will be interlocked with control and safety interlocks.

2. The control interlocks will consist of switches to limit the extremes of travel of the various motions and will interface with switches on other equipment to ensure correct location of the drum prior to engagement of the clamp. An indication will be provided for Plant Operations showing equipment status.

9413227.0356

3. Safety interlocks will prevent movement of the Handler/Tipper if the status of adjacent equipment indicates an unsafe or out of sequence condition.

D. Data Sheets

Equipment Tag Nos. WBS Area Location Numbers and equipment data sheets for this description are provided in **Appendix A.**

END OF SECTION

9413227.0357

WRAP MODULE 2A

APPENDIX A

EQUIPMENT/INSTRUMENT DATA SHEETS

WBS LOCATION	EQUIPMENT TAG	SERVICE
1105	DH-05-522	Drum Handler/Tipping
1106	DH-06-102	Drum Handler/Tipping
1105	DH-05-542	Drum Handler/Tipping

9413227.0359

UNITED ENGINEERS & CONSTRUCTORS A Raytheon Company Western Operations	EQUIPMENT DATA SHEET ☒ CDR ☐ TITLE I ☐ TITLE II ☐ TITLE III	ITEM NUMBER DH-05-522	PAGE 1 OF 3

CUSTOMER & LOCATION	PROJECT	UE&C JOB NO. 6237.006	DATE: 05/12/92
DOE-RL/WHC HANFORD, WA	WRAP FACILITY MODULE 2A	ACCOUNT NO.	BY: SAS

REVISIONS (DATE & BY)	A		B		C		D	
	E		F		G		H	

SERVICE	MANUFACTURER	NO. REQ'D.	SOURCE OF QUOTE
DRUM HANDLER/TIPPER		1	

DRUM TIPPER

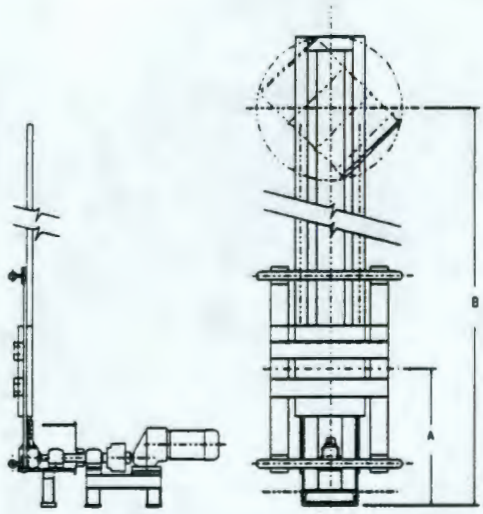

CONDITIONS OF SERVICE		DIMENSIONS	
APPLICATION: HANDLE AND TIP DRUM WITHIN ENCLOSURE		A:	F:
UNIT LOAD DESCRIPTION: 55 AND 85 GAL DRUMS CONTAINING LLRMW		B:	G:
UNIT LOAD SIZE: 26" DIA X 39" HIGH	DUTY: 8 HRS/DAY	C:	H:
UNIT LOAD WEIGHT: 3,000 LBS		D:	I:
LOCATION: SHREDDER AND REPACK ENCLOSURE		E:	J:
RATED CAPACITY: 3,000 LBS			
CONSTRUCTION			
MATERIAL: CARBON STEEL			
ACTUATION: HYDRAULIC			
TRAVEL HEIGHT: 35'			
TRAVEL SPEED: 15 FPM			
MOTOR RATING: 10.5 HP (TOTAL)			

9413227.0359

UNITED ENGINEERS & CONSTRUCTORS A Raytheon Company Western Operations	EQUIPMENT DATA SHEET ☒ CDR ☐ TITLE I ☐ TITLE II ☐ TITLE III	ITEM NUMBER DH-05-522	PAGE 2 OF 3
CUSTOMER & LOCATION DOE-RL/WHC HANFORD, WA	PROJECT WRAP FACILITY MODULE 2A	UE&C JOB NO. 6237.006	DATE: 04/13/92
		ACCOUNT NO.	BY: SAS

REVISIONS (DATE & BY)	A		B		C		D	
	E		F		G		H	

SERVICE	MANUFACTURER	NO. REQ'D.	SOURCE OF QUOTE
DRUM HANDLER/TIPPER (GRAB)		1	

DRUM GRABBER (DRUM CLAMP)

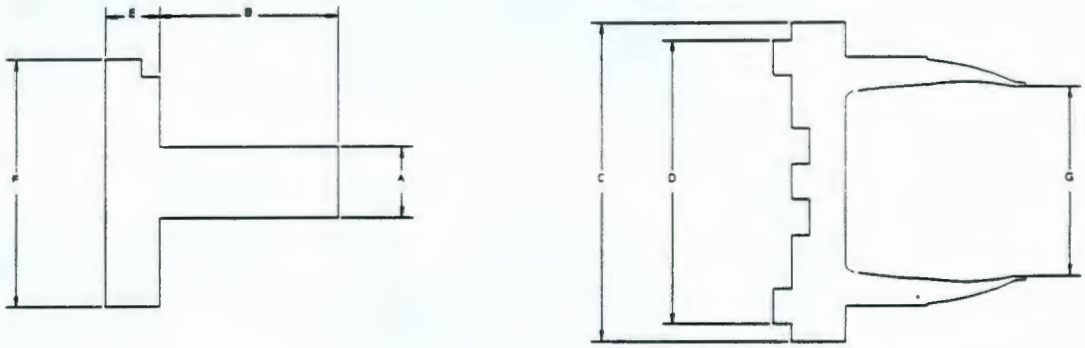

CONDITIONS OF SERVICE		DIMENSIONS	
APPLICATION: HANDLE AND TIP DRUMS WITHIN ENCLOSURE		A:	H:
DESCRIPTION: 55 AND 85 GAL DRUMS CONTAINING LLRMW		B:	J:
SIZE: 26" DIA X 39" HIGH	DUTY: 8 HOURS/DAY	C:	K:
UNIT LOAD WEIGHT: 3,000 LBS		D:	L:
LOCATION: SHREDDER AND REPACK ENCLOSURE		E:	M:
RATED CAPACITY: 3,000 LBS		F:	N:
		G:	
CONSTRUCTION			
CONTROL: HYDRAULIC			
MATERIAL: CARBON STEEL PAINTED			
CAPACITY: 3,000 LBS			
OPTIONS: FLOW DIVIDER FOR EQUAL OPENING			

9413227.0360

UNITED ENGINEERS & CONSTRUCTORS A Raytheon Company Western Operations	EQUIPMENT DATA SHEET ☒ CDR ☐ TITLE I ☐ TITLE II ☐ TITLE III	ITEM NUMBER DH-05-522	PAGE 3 OF 3

CUSTOMER & LOCATION	PROJECT	UE&C JOB NO. 6237.006	DATE: 05/12/92
DOE-RL/WHC HANFORD, WA	WRAP FACILITY MODULE 2A	ACCOUNT NO.	BY: SAS

REVISIONS (DATE & BY)	A		B		C		D	
	E		F		G		H	

SERVICE	MANUFACTURER	NO. REQ'D.	SOURCE OF QUOTE
DRUM HANDLER/TIPPER (ROTATION)		1	

DRUM ROTATOR

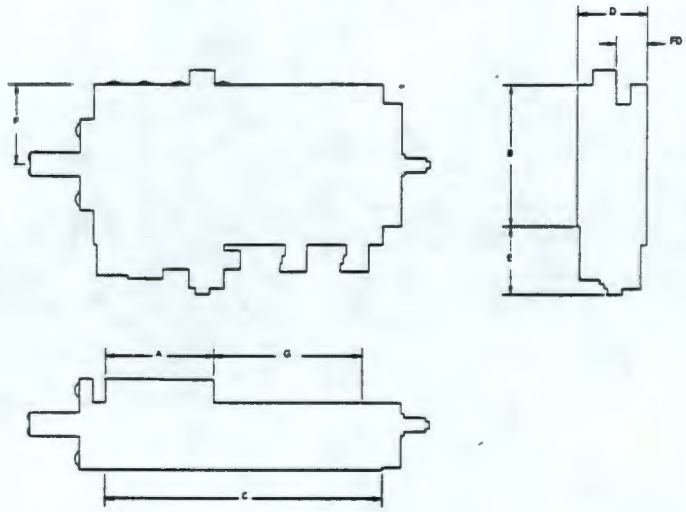

CONDITIONS OF SERVICE		DIMENSIONS	
APPLICATION: HANDLE AND TIP DRUMS WITHIN ENCLOSURE		A:	F:
UNIT LOAD DESCRIPTION: 55 AND 85 GAL DRUMS CONTAINING LLRMW		B:	G:
UNIT LOAD SIZE: 26" DIA X 39" HIGH	DUTY: 8 HRS/DAY	C:	H:
UNIT LOAD WEIGHT: 3,000 LBS		D:	I:
LOCATION: SHREDDING AND REPACK ENCLOSURE		E:	J:
RATED CAPACITY: 3,000 LBS			
CONSTRUCTION			
CAPACITY: 3,000 LBS			

9413227.0361

UNITED ENGINEERS & CONSTRUCTORS A Raytheon Company Western Operations	EQUIPMENT DATA SHEET ☒ CDR ☐ TITLE I ☐ TITLE II ☐ TITLE III	ITEM NUMBER DH-06-102	PAGE 1 OF 3

CUSTOMER & LOCATION	PROJECT	UE&C JOB NO. 6237.006	DATE: 04/28/92
DOE-RL/WHC HANFORD, WA	WRAP FACILITY MODULE 2A	ACCOUNT NO.	BY: GBD

REVISIONS (DATE & BY)	A		B		C		D	
	E		F		G		H	

SERVICE	MANUFACTURER	NO. REQ'D.	SOURCE OF QUOTE
DRUM HANDLER/TIPPER		1	

DRUM HANDLER (ROTATOR)

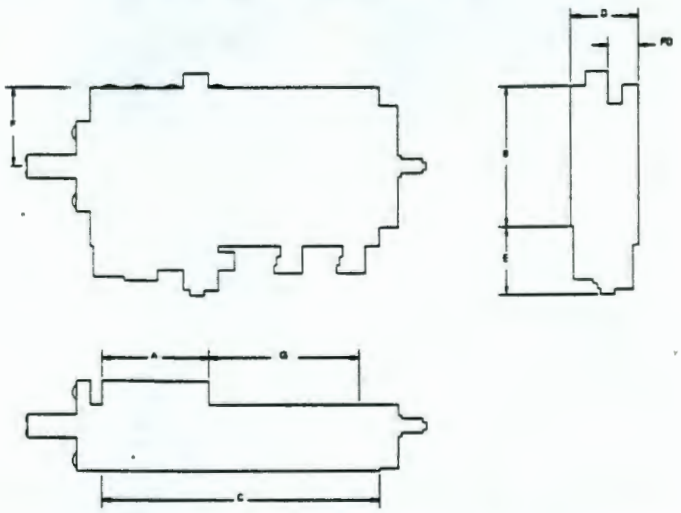

CONDITIONS OF SERVICE		DIMENSIONS	
APPLICATION: LIFT AND TIP DRUM TO REMOVE CONTENTS		A: 2'-6"	H:
UNIT LOAD DESCRIPTION: 55 GALLON WASTE DRUM		B: 20'-0"	J:
UNIT LOAD SIZE: 22.5' DIA X 39" HIGH	DUTY: 8 HOURS/DAY	C:	K:
UNIT LOAD WEIGHT: 3,000 LBS MAX		D:	L:
LOCATION: SPECIAL WASTE ENCLOSURE		E:	M:
RATED CAPACITY: 3,000 LBS		F:	N:
		G:	
CONSTRUCTION			
MATERIAL: CARBON STEEL			
ACTUATION: HYDRAULIC			
TRAVEL HEIGHT: 20'			
TRAVEL SPEED: 15 FPM			

9413227.0362

UNITED ENGINEERS & CONSTRUCTORS A Raytheon Company Western Operations	EQUIPMENT DATA SHEET ☒ CDR ☐ TITLE I ☐ TITLE II ☐ TITLE III	ITEM NUMBER DH-06-102	PAGE 2 OF 3
CUSTOMER & LOCATION DOE-RL/WHC HANFORD, WA	PROJECT WRAP FACILITY MODULE 2A	UE&C JOB NO. 6237.006	DATE: 04/28/92
		ACCOUNT NO.	BY: GBD

REVISIONS (DATE & BY)	A		B		C		D	
	E		F		G		H	

SERVICE	MANUFACTURER	NO. REQ'D.	SOURCE OF QUOTE
DRUM HANDLER/TIPPER		1	

DRUM HANDLER (DRUM CLAMP)

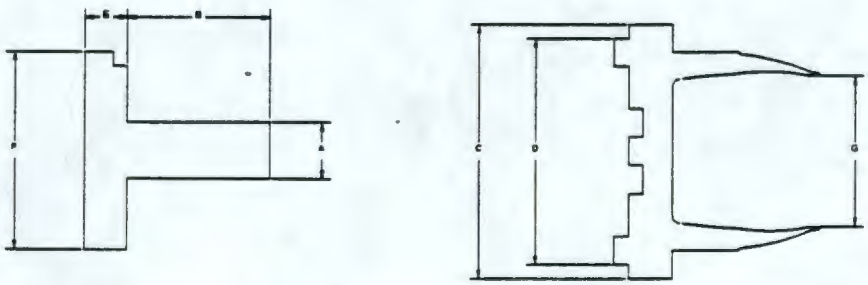

CONDITIONS OF SERVICE		DIMENSIONS	
APPLICATION: GRAB AND TIP DRUM TO REMOVE CONTENTS		A:	H:
UNIT LOAD DESCRIPTION: 55 GALLON WASTE DRUM		B:	J:
UNIT LOAD SIZE: 22.5' DIA X 39" HIGH	DUTY: 8 HOURS/DAY	C:	K:
UNIT LOAD WEIGHT: 3,000 LBS MAX		D:	L:
LOCATION: SPECIAL WASTE ENCLOSURE		E:	M:
RATED CAPACITY: 3,500 LBS		F:	N:
		G:	
CONSTRUCTION			
MATERIAL: CARBON STEEL - PAINTED			
ACTUATION: HYDRAULIC			
CAPACITY: 3,500 LBS			
OPTIONS: FLOW DIVIDER FOR EQUAL OPENING			

9413227.0363

UNITED ENGINEERS & CONSTRUCTORS A Raytheon Company Western Operations	EQUIPMENT DATA SHEET ☒ CDR ☐ TITLE I ☐ TITLE II ☐ TITLE III	ITEM NUMBER DH-06-102	PAGE 3 OF 3
CUSTOMER & LOCATION DOE-RL/WHC HANFORD, WA	PROJECT WRAP FACILITY MODULE 2A	UE&C JOB NO. 6237.006	DATE: 04/28/92
		ACCOUNT NO.	BY: GBD

REVISIONS (DATE & BY)	A		B		C		D	
	E		F		G		H	

SERVICE	MANUFACTURER	NO. REQ'D.	SOURCE OF QUOTE
DRUM HANDLER/TIPPER		1	

DRUM HANDLER

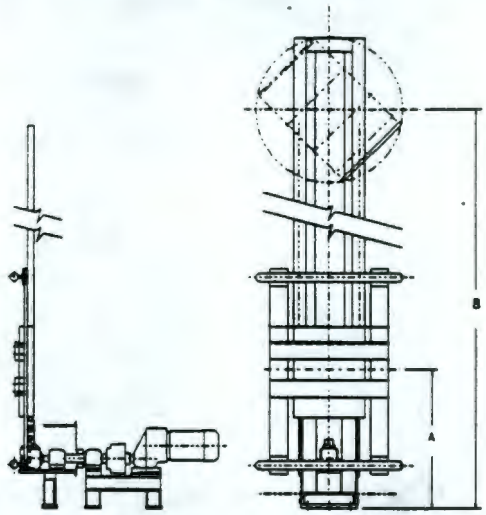

CONDITIONS OF SERVICE		DIMENSIONS	
APPLICATION: LIFT AND TIP DRUM TO REMOVE CONTENTS		A: 2'-6"	H:
UNIT LOAD DESCRIPTION: 55 GALLON WASTE DRUM		B: 20'-0"	J:
UNIT LOAD SIZE: 22.5' DIA X 39" HIGH	DUTY: 8 HOURS/DAY	C:	K:
UNIT LOAD WEIGHT: 3,000 LBS MAX		D:	L:
LOCATION: SPECIAL WASTE ENCLOSURE		E:	M:
RATED CAPACITY: 3,000 LBS		F:	N:
		G:	
CONSTRUCTION			
MATERIAL: CARBON STEEL - HARDENED STEEL			
ACTUATION: HYDRAULIC			
CAPACITY: 3,000 LBS			

9413227.0364

UNITED ENGINEERS & CONSTRUCTORS A Raytheon Company Western Operations	EQUIPMENT DATA SHEET ☒ CDR ☐ TITLE I ☐ TITLE II ☐ TITLE III	ITEM NUMBER DH-05-542	PAGE 1 OF 3

CUSTOMER & LOCATION	PROJECT	UE&C JOB NO. 6237.006	DATE: 05/13/92
DOE-RL/WHC HANFORD, WA	WRAP FACILITY MODULE 2A	ACCOUNT NO.	BY: SAS

REVISIONS (DATE & BY)	A		B		C		D	
	E		F		G		H	

SERVICE	MANUFACTURER	NO. REQ'D.	SOURCE OF QUOTE
DRUM HANDLER/TIPPER		1	

DRUM TIPPER

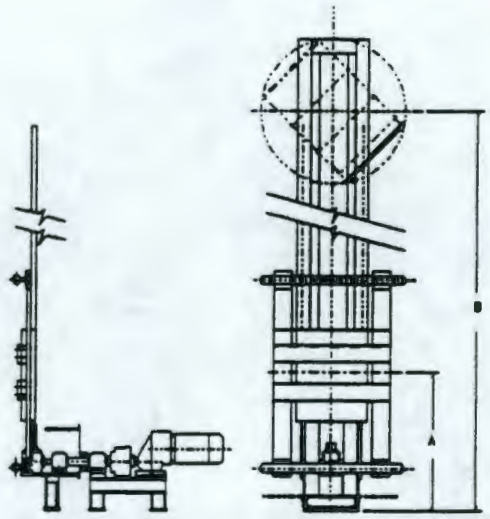

CONDITIONS OF SERVICE		DIMENSIONS	
APPLICATION: HANDLE AND TIP DRUMS WITHIN ENCLOSURE		A: 2'-6"	F:
UNIT LOAD DESCRIPTION: 55 AND 85 GAL DRUMS CONTAINING LLRMW		B: 20'	G:
UNIT LOAD SIZE: 26" DIA X 39" HIGH	DUTY: 8 HRS/DAY	C:	H:
UNIT LOAD WEIGHT: 3,000 LBS		D:	I:
LOCATION: PUG MILL ENCLOSURE		E:	J:
RATED CAPACITY: 3,000 LBS			
CONSTRUCTION			
MATERIAL: CARBON STEEL			
ACTUATION: HYDRAULIC			
TRAVEL HEIGHT: 20 FT			
TRAVEL SPEED: 15 FPM			

UNITED ENGINEERS & CONSTRUCTORS A Raytheon Company Western Operations	EQUIPMENT DATA SHEET ☒ CDR ☐ TITLE I ☐ TITLE II ☐ TITLE III	ITEM NUMBER DH-05-542	PAGE 2 OF 3

CUSTOMER & LOCATION	PROJECT	UE&C JOB NO. 6237.006	DATE: 05/13/92
DOE-RL/WHC HANFORD, WA	WRAP FACILITY MODULE 2A	ACCOUNT NO.	BY: SAS

REVISIONS (DATE & BY)	A		B		C		D	
	E		F		G		H	

SERVICE	MANUFACTURER	NO. REQ'D.	SOURCE OF QUOTE
DRUM HANDLER/TIPPER (GRAB)		1	

DRUM GRABBER (DRUM CLAMP)

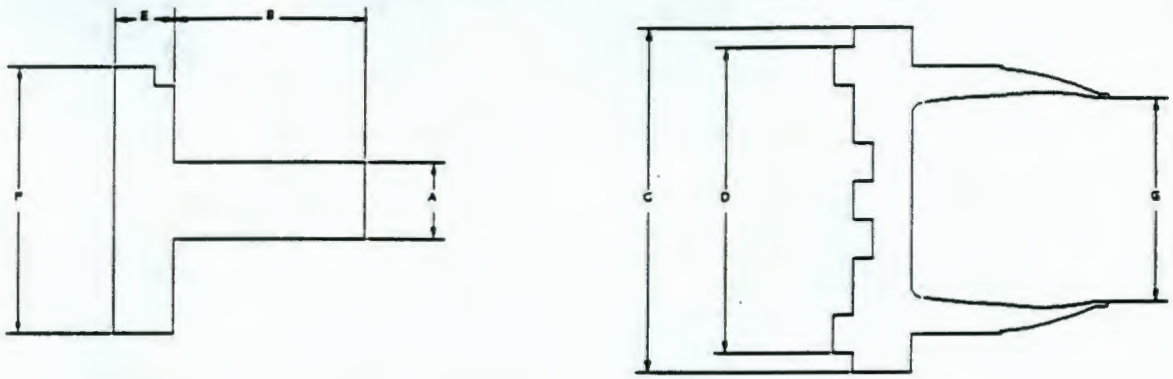

CONDITIONS OF SERVICE		DIMENSIONS	
APPLICATION: HANDLER AND TIP DRUMS WITHIN ENCLOSURE		A:	F:
UNIT LOAD DESCRIPTION: 55 AND 85 GALLON DRUMS CONTAINING LLRMW		B:	G:
UNIT LOAD SIZE: 26" DIA X 39" HIGH	DUTY: 8 HOURS/DAY	C:	H:
UNIT LOAD WEIGHT: 3,000 LBS		D:	I:
LOCATION: PUG MILL ENCLOSURE		E:	J:
RATED CAPACITY: 3,000 LBS			
CONSTRUCTION			
CONTROL: HYDRAULIC			
MATERIAL: CARBON STEEL PAINTED			
CAPACITY: 3,000 LBS			
OPTIONS: FLOW DIVIDER FOR EQUAL OPENING			

9413227.0366

UNITED ENGINEERS & CONSTRUCTORS A Raytheon Company Western Operations	EQUIPMENT DATA SHEET ☒ CDR ☐ TITLE I ☐ TITLE II ☐ TITLE III	ITEM NUMBER DH-05-542	PAGE 3 OF 3

CUSTOMER & LOCATION	PROJECT	UE&C JOB NO. 6237.006	DATE: 05/13/92
DOE-RL/WHC HANFORD, WA	WRAP FACILITY MODULE 2A	ACCOUNT NO.	BY: SAS

REVISIONS (DATE & BY)	A		B		C		D	
	E		F		G		H	

SERVICE	MANUFACTURER	NO. REQ'D.	SOURCE OF QUOTE
DRUM HANDLER/TIPPER (ROTATION)		1	

DRUM ROTATOR

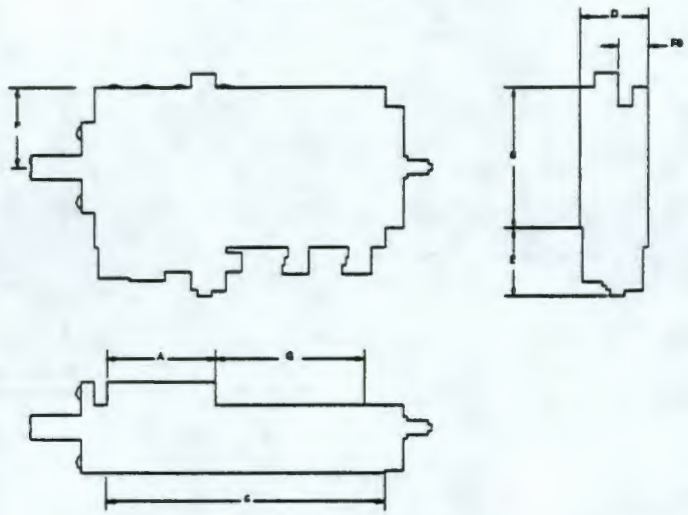

CONDITIONS OF SERVICE		DIMENSIONS	
APPLICATION: HANDLE AND TIP DRUMS WITHIN ENCLOSURE		A:	F:
UNIT LOAD DESCRIPTION: 55 AND 85 GAL DRUMS CONTAINING LLRMW		B:	G:
UNIT LOAD SIZE: 26" DIA X 39" HIGH	DUTY: 8 HRS/DAY	C:	H:
UNIT LOAD WEIGHT: 3,000 LBS		D:	I:
LOCATION: PUG MILL ENCLOSURE		E:	J:
RATED CAPACITY: 3,000 LBS			
CONSTRUCTION			
CAPACITY: 3,000 LBS			

SECTION 14054

9W43227.0368

THIS PAGE INTENTIONALLY
LEFT BLANK

THIS PAGE INTENTIONALLY
LEFT BLANK

WRAP MODULE 2A

SPECIFICATION SECTION
FOR
14054 SORTING AND TIPPING TABLES

TABLE OF CONTENTS

PART 1 GENERAL

1.01 SECTION SCOPE
1.02 RELATED SECTIONS
1.03 REFERENCES
1.04 SYSTEM DESCRIPTION
1.05 SUBMITTALS
1.06 DELIVERY, STORAGE AND HANDLING
1.07 SITE CONDITIONS

PART 2 PRODUCTS

2.01 MANUFACTURERS
2.02 MATERIALS
2.03 EQUIPMENT
2.04 COMPONENTS
2.05 FABRICATION
2.06 SHOP QUALITY CONTROL

PART 3 EXECUTION

3.01 PREPARATION
3.02 ERECTION, INSTALLATION AND APPLICATION
3.03 FIELD QUALITY CONTROL
3.04 ADJUSTING AND CLEANING
3.05 DEMONSTRATION
3.06 PROTECTION

APPENDIX

APPENDIX A DATA SHEETS

9413227.0369

WRAP MODULE 2A

SECTION 14054

SORTING AND TIPPING TABLES

PART 1 GENERAL

1.01 SECTION SCOPE

A. This specification establishes the requirements for detailed design, fabrication, installation, start-up, and acceptance testing of Waste Sorting Table for WRAP Module 2A Facility.

1.02 RELATED SECTIONS

1.03 REFERENCES

A. Anti-Friction Bearing Manufacturer's Association
AFBMA All applicable sections.

B. American National Standards Institute
ANSI All applicable sections.

C. American Society for Testing and Materials
ASTM All applicable sections.

D. American Welding Society
AWS D1.1 "Structural Welding Code"

E. Occupational Safety and Health Administration
OSHA 29 CFR Part 1910

F. National Electric Code
NEC All applicable sections.

G. National Electric Manufacturers Association
NEMA MG-1 Motors and Generators

H. American Gear Manufacturers Association
AGMA All applicable sections.

I. Mechanical Power Transmission Association
MPTA ND 301 All applicable sections.

9413227.0370

1.04 SYSTEM DESCRIPTION

A. The sorting and tipping tables provide the following functions:

- Allow waste from drums to be emptied, inspected and sorted.
- Allow waste to be transferred from the table to further processing equipment.

B. General Description

1. The sorting and tipping table consists of a flat horizontal table which is mounted on horizontal sliding rails on the enclosure wall. The table can traverse in the horizontal plane. At the limit of its travel in one direction. The table is capable of pivoting in the vertical plane such that waste can slide off the table by gravity.

2. The sorting and tipping table is located within process enclosure. The sorting and tipping table is powered by pneumatic supply at 80 psi.

C. Construction

The sorting and tipping table will be constructed of stainless steel.

D. Control and Instrumentation

1. The sorting and tipping table will be interfaced with control and safety interlocks.

2. The safety interlocks will prevent operation of the sorting and tipping table if the environmental conditions are not satisfactory.

3. The sorting and lifting table is controlled from the main control room.

E. Data Sheets

Equipment Tag Nos. WBS Area Location Numbers and equipment data sheets for this description are provided in **Appendix A.**

END OF SECTION

WRAP MODULE 2A

APPENDIX A

EQUIPMENT/INSTRUMENT DATA SHEETS

WBS LOCATION	EQUIPMENT TAG	SERVICE
1105	ST-05-521 A,B	Sort and Tipping Table - Shredder and Repack Enclosure
1106	ST-06-101	Sort and Tipping Table - Special Waste Enclosure
1105	ST-05-541	Sorting/Tipping Table

9413227.0372

APRIL 1992

UE&C PROJECT NO. 6237.006

FILE NO. 14054 - A1

UNITED ENGINEERS & CONSTRUCTORS A Raytheon Company Western Operations	EQUIPMENT DATA SHEET ☒ CDR ☐ TITLE I ☐ TITLE II ☐ TITLE III	ITEM NUMBER ST-05-521A,B	PAGE 1 OF 1

CUSTOMER & LOCATION	PROJECT	UE&C JOB NO. 6237.006	DATE: 05/14/92
DOE-RL/WHC HANFORD, WA	WRAP FACILITY MODULE 2A	ACCOUNT NO.	BY: SAS

REVISIONS (DATE & BY)	A		B		C		D	
	E		F		G		H	

SERVICE	MANUFACTURER	NO. REQ'D.	SOURCE OF QUOTE
SORTING/TIPPING TABLE		2	

SORTING TABLE

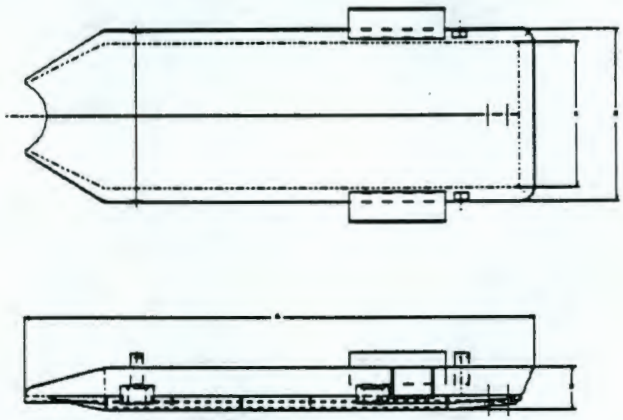

CONDITIONS OF SERVICE		DIMENSIONS	
APPLICATION: WORK TABLE FOR WASTE SORTING AND TIPPING TO ALLOW DIRECT FEEDING OF SHREDDER		A:	F:
UNIT LOAD DESCRIPTION: LLRMW FROM 55 AND 85 GALLON DRUMS		B:	G:
UNIT LOAD SIZE: 26" DIA X 39" HIGH		C:	H:
UNIT LOAD WEIGHT: 3,000 LBS MAXIMUM		D:	I:
LOCATION: SHREDDER AND REPACK ENCLOSURE		E:	J:
RATED CAPACITY: 3,000 LBS MAXIMUM			
CONSTRUCTION			
ACTUATION: PNEUMATIC			
CONSTRUCTION: 1/4" 304 SS			

9413227.0373

UNITED ENGINEERS & CONSTRUCTORS A Raytheon Company Western Operations	EQUIPMENT DATA SHEET ☒ CDR ☐ TITLE I ☐ TITLE II ☐ TITLE III	ITEM NUMBER ST-06-101	PAGE 1 OF 1

CUSTOMER & LOCATION	PROJECT	UE&C JOB NO. 6237.006	DATE: 04/21/92
DOE-RL/WHC HANFORD, WA	WRAP FACILITY MODULE 2A	ACCOUNT NO. 1105	BY: RLH

REVISIONS (DATE & BY)	A		B		C		D	
	E		F		G		H	

SERVICE	MANUFACTURER	NO. REQ'D.	SOURCE OF QUOTE
SORTING/TIPPING TABLE		1	

SORTING TABLE

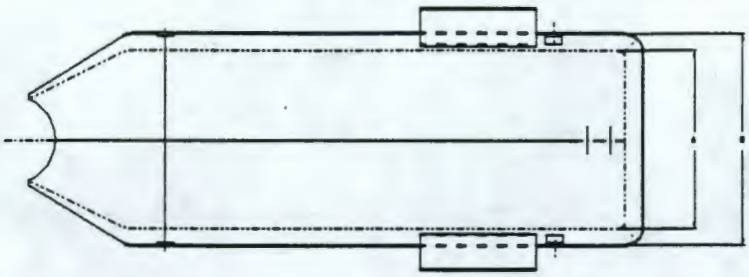

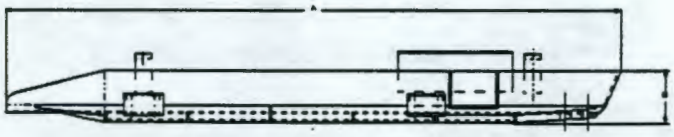

CONDITIONS OF SERVICE		DIMENSIONS	
APPLICATION: WORK TABLE FOR WASTE SORTING AND TIPPING TO ALLOW DIRECT FEEDING OF SHREDDER		A:	F:
UNIT LOAD DESCRIPTION: MERCURY & LEAD CONTAMINATED WASTE		B:	G:
UNIT LOAD SIZE: 22.5" DIA X 34.5" HIGH, 55 GALLON DRUMS	DUTY:	C:	H:
UNIT LOAD WEIGHT: 3,000 LBS MAXIMUM	OPEN/CLOSING SPEED:	D:	I:
LOCATION: INSIDE SPECIAL WASTE ENCL	OPEN/CLOSING TIME:	E:	J:
RATED CAPACITY: 3,000 LBS MAXIMUM			
CONSTRUCTION			
ACTUATION: PNEUMATIC	EMERGENCY CLOSING:		
CONSTRUCTION: 1/4" 304 SS	LIMIT SWITCHES:		
	INTERLOCKS:		

UNITED ENGINEERS & CONSTRUCTORS A Raytheon Company Western Operations	EQUIPMENT DATA SHEET ☒ CDR ☐ TITLE I ☐ TITLE II ☐ TITLE III	ITEM NUMBER ST-05-541	PAGE 1 OF 1

CUSTOMER & LOCATION	PROJECT	UE&C JOB NO.	DATE: 05/14/92
DOE-RL/WHC HANFORD, WA	WRAP FACILITY MODULE 2A	6237.006	
		ACCOUNT NO.	BY: SAS

REVISIONS (DATE & BY)	A		B		C		D	
	E		F		G		H	

SERVICE	MANUFACTURER	NO. REQ'D.	SOURCE OF QUOTE
SORTING/TIPPING TABLE		2	

SORTING TABLE

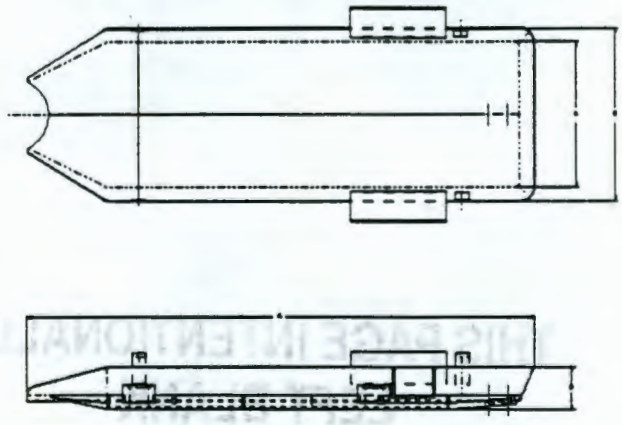

CONDITIONS OF SERVICE		DIMENSIONS	
APPLICATION: WORK TABLE FOR WASTE SORTING AND TIPPING TO ALLOW DIRECT FEEDING OF PUG MILL		A:	F:
UNIT LOAD DESCRIPTION: LLRMW FROM 55 AND 85 GALLON DRUMS		B:	G:
UNIT LOAD SIZE: 26" DIA X 39" HIGH		C:	H:
UNIT LOAD WEIGHT: 3,000 LBS MAXIMUM		D:	I:
LOCATION: PUG MILL ENCLOSURE		E:	J:
RATED CAPACITY: 3,000 LBS MAXIMUM			
CONSTRUCTION			
ACTUATION: PNEUMATIC			
CONSTRUCTION: 1/4" 304 SS			

9413227.0375

THIS PAGE INTENTIONALLY
LEFT BLANK

SECTION 14450

9413227.0376

THIS PAGE INTENTIONALLY
LEFT BLANK

WRAP MODULE 2A

SPECIFICATION SECTION
FOR
14450 FORK LIFT TRUCK

TABLE OF CONTENTS

PART 1 GENERAL

1.01 SECTION SCOPE
1.02 RELATED SECTIONS
1.03 REFERENCES
1.04 SYSTEM DESCRIPTION
1.05 SUBMITTALS
1.06 DELIVERY, STORAGE & HANDLING
1.07 SITE CONDITIONS

PART 2 PRODUCTS

2.01 MANUFACTURERS
2.02 MATERIALS
2.03 EQUIPMENT
2.04 COMPONENTS
2.05 FABRICATION
2.06 SHOP QUALITY CONTROL

PART 3 EXECUTION

3.01 PREPARATION
3.02 ERECTION, INSTALLATION & APPLICATION
3.03 FIELD QUALITY CONTROL
3.04 ADJUSTING AND CLEANING
3.05 DEMONSTRATION
3.06 PROTECTION

APPENDIX

APPENDIX A DATA SHEETS

WRAP MODULE 2A

SECTION 14450

FORK LIFT TRUCK

PART 1 GENERAL

1.01 SECTION SCOPE

A. This specification establishes the requirements for fork lift truck, hydraulic system safety items and supporting equipment for use in WRAP 2A shipping and receiving areas.

1.02 RELATED SECTIONS

1.03 REFERENCES

A. American National Standards Institute (ANSI)

ANSI - B56.1	Safety Standard for Powered Industrial Trucks, Low Lift and High Lift Trucks
ANSI - 583	Safety Standard for Electric-Battery Powered Industrial Trucks

B. Occupational Safety and Health Administration (OSHA)

OSHA 29-CFR-1910.178	All Applicable Sections.

C. Joint Industrial Commission (JIC)

JIC H-I	Hydraulic

D. National Electric Code (NEC)

NEC	All Applicable Sections.

E. National Fluid Power Association (NFPA)

NFPA	All Applicable Sections.

F. National Fire Protection Association (NFPA)

NFPA - 70-90	(National Electric Code)
NFPA - 505	Powered Industrial Trucks

1.04 SYSTEM DESCRIPTION

A. The fork trucks will be used to transport boxes and pallets from enclosed trailer vans and transport pallets to various workstations in the Shipping and Receiving area and between WRAP 2A and facility W112.

9413227.0378

WRAP MODULE 2A

APPENDIX A

EQUIPMENT/INSTRUMENT DATA SHEETS

WBS LOCATION	EQUIPMENT TAG	SERVICE
1109	FT-09-101	Fork Lift Truck
1105	FT-05-501	Drum Pallet Truck
1109	X-09-101	Fork Truck Dual Drum Gripper

9414227.0879

APRIL 1992

UE&C PROJECT NO. 6237.006

FILE NO. 14450 - A1

UNITED ENGINEERS & CONSTRUCTORS A Raytheon Company Western Operations	EQUIPMENT DATA SHEET ☒ CDR ☐ TITLE I ☐ TITLE II ☐ TITLE III	ITEM NUMBER FT-09-101	PAGE 1 OF 1
CUSTOMER & LOCATION DOE-RL/WHC HANFORD, WA	PROJECT WRAP FACILITY MODULE 2A	UE&C JOB NO. 6237.006 / ACCOUNT NO.	DATE: 04/06/92 / BY: JDC

REVISIONS (DATE & BY)	A		B		C		D	
	E		F		G		H	

SERVICE	MANUFACTURER	NO. REQ'D.	SOURCE OF QUOTE
REC/SHIP FORKTRUCK		1	

ELECTRIC FORK TRUCK

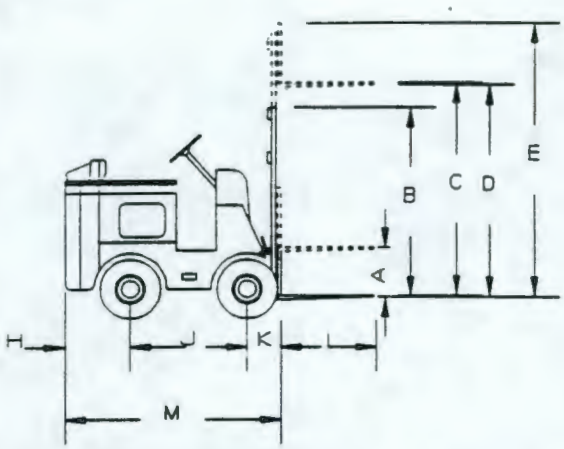

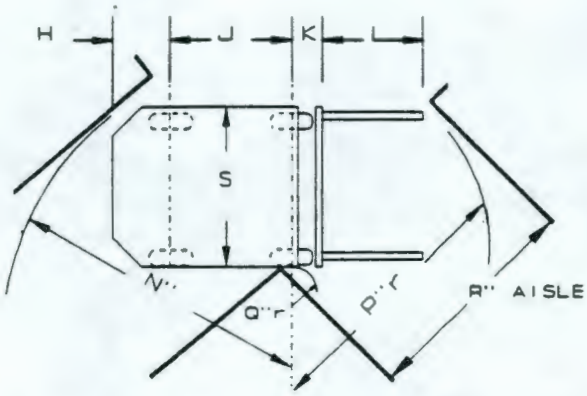

CONDITIONS OF SERVICE		DIMENSIONS	
APPLICATION: TRANSFER BOXES AND PALLETS FROM W112 TO REC/SHIP		A: 6.5"	K: 8"
UNIT LOAD DESCRIPTION: BOXES AND PALLETS WITH 4 DRUMS		B: 83.5"	L: 60"
UNIT LOAD SIZE: 5' X 5' X 9'/56" X 56"	SPEED UNLOADED/LOADED: 8.0/6.7 MPH	C: 111.0"	M: 106"
UNIT LOAD WEIGHT: 12,000 LBS	DUTY: 8 HOURS/DAY	D:	N: 94.7"
TRUCK CAP. @ LOAD CENTER: 12,000 LBS	NEC AREA CLASS: UNCLASSIFIED	E: 147.5"	P:
GRADEABILITY: 15%		F:	Q: 17.2"
LOAD CENTER: 24"		G:	R: 86"
		H: 20.3"	S: 46"
CONSTRUCTION		J: 68.5"	
TRUCK TYPE: ELECTRIC	ELECTRICAL REQ.: 480V/3PH/60HZ		
TRUCK CLASS:	BATTERY CHARGER TYPE/CAP.: 48V/1600 AMP HR		
OPERATORS COMPARTMENT: STD WHEEL/SEAT	BATTERY DISCHARGE INDICATOR:		
TIRES: RUBBER/POLY	MOTOR PROTECTION: THERMAL		
MAST TYPE: 2 SECTIONS	STEERING: POWER		
MAST LIFT HEIGHT: 147.5"	BRAKES: POWER		
MAST LOWERED HEIGHT: 83.5"	SERVICE ANALYZER: REQUIRED		
MAST ATTACHMENTS: STANDARD	SHIPPING WT.: 13,870 LBS		
FORK TYPE: STANDARD	FORK SIDE SHIFT: OPTIONAL		
FORK WIDTH: 5"			
FORK LENGTH: 60"			

9413227.0380

UNITED ENGINEERS & CONSTRUCTORS A Raytheon Company Western Operations	EQUIPMENT DATA SHEET ☒ CDR ☐ TITLE I ☐ TITLE II ☐ TITLE III	ITEM NUMBER FT-05-501	PAGE 1 OF 1

CUSTOMER & LOCATION	PROJECT	UE&C JOB NO. 6237.006	DATE: 05/05/92
DOE-RL/WHC HANFORD, WA	WRAP FACILITY MODULE 2A	ACCOUNT NO.	BY: SAS

REVISIONS (DATE & BY)	A		B		C		D	
	E		F		G		H	

SERVICE	MANUFACTURER	NO. REQ'D.	SOURCE OF QUOTE
DRUM PALLET TRUCK		1	

DRUM PALLET TRUCK

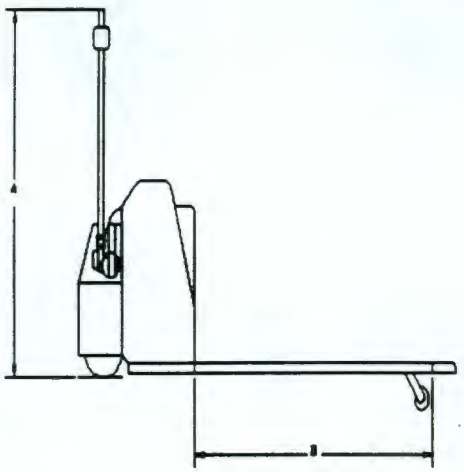

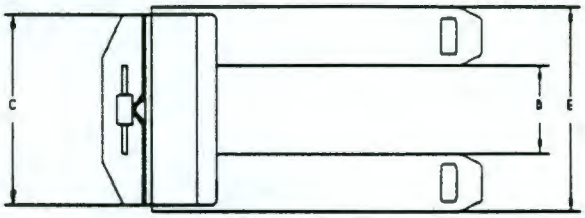

CONDITIONS OF SERVICE		DIMENSIONS	
APPLICATION: TRANSFER DRUMSCONTAINING NONCOMPLIENT ITEMS WITHIN SIZE REDUCTION & REPACK CELL		A:	F:
UNIT LOAD DESCRIPTION: 55 GAL DRUMS CONTAINING LLRMW		B:	G:
UNIT LOAD SIZE: 22.5" DIA X 34.5" HIGH	SPEED UNLOADED/LOADED:	C:	H:
UNIT LOAD WEIGHT: 3,000 LBS	DUTY: 8 HRS/DAY	D:	I:
TOTAL DISTRIBUTED LOAD: 3,000 LBS	NEC AREA CLASS: UNCLASSIFIED	E:	J:

CONSTRUCTION	
PALLET TRUCK TYPE: ELECTRIC POWERED	
PALLET TRUCK CAPABILITY: 3,000 LBS	
TYPE OF CONTROL: MANUAL	

9413227.0381

UNITED ENGINEERS & CONSTRUCTORS A Raytheon Company Western Operations	EQUIPMENT DATA SHEET ☒ CDR ☐ TITLE I ☐ TITLE II ☐ TITLE III	ITEM NUMBER X-09-101	PAGE 1 OF 1

CUSTOMER & LOCATION	PROJECT	UE&C JOB NO. 6237.006	DATE: 06/15/92
DOE-RL/WHC HANFORD, WA	WRAP FACILITY MODULE 2A	ACCOUNT NO.	BY: JDC

REVISIONS (DATE & BY)								
	A		B		C		D	
	E		F		G		H	

SERVICE	MANUFACTURER	NO. REQ'D.	SOURCE OF QUOTE
FORKLIFT DUAL DRUM GRIP		1	

DUAL DRUM GRIPPER

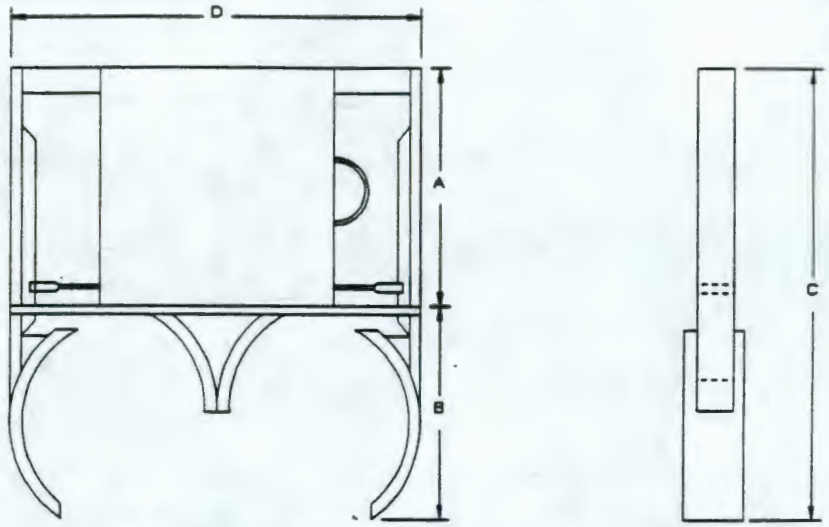

CONDITIONS OF SERVICE		DIMENSIONS	
APPLICATION: TRANSPORTING NEW 55 GALLON DRUMS		A:	F:
UNIT LOAD DESCRIPTION: 55 GALLON DRUMS		B:	G:
UNIT LOAD SIZE: 22.5" DIA X 34" HIGH	DUTY: 8 HOURS/DAY	C:	H:
UNIT LOAD WEIGHT: 100 LBS	SPEED: N/A	D:	I:
LOCATION: SHIPPING AND RECEIVING	NEC AREA CLASS:	E:	J:
RATED CAPACITY: 2,000 LBS			
CONSTRUCTION			
FRAME MAT'L (ASTM):	TOTAL WEIGHT: 345 LBS		
DISTANCE BETWEEN FORKS: 17"			
FORK TUBE SIZE: 1.5" X 6" X 22"			
JAW SIZE: 6" X 18"			
POWER: HYDRAULIC FROM FORKLIFT			

9413227.0382

SECTION 14470

9W 3227.0383

THIS PAGE INTENTIONALLY
LEFT BLANK

THIS PAGE INTENTIONALLY
LEFT BLANK

WRAP MODULE 2A

SPECIFICATION SECTION
FOR
14470 SCISSOR LIFT TABLE

TABLE OF CONTENTS

PART 1 GENERAL

1.01 SECTION SCOPE
1.02 RELATED SECTIONS
1.03 REFERENCES
1.04 SYSTEM DESCRIPTION
1.05 SUBMITTALS
1.06 DELIVERY, STORAGE AND HANDLING
1.07 SITE CONDITIONS

PART 2 PRODUCTS

2.01 MANUFACTURERS
2.02 MATERIALS
2.03 EQUIPMENT
2.04 COMPONENTS
2.05 FABRICATION
2.06 SHOP QUALITY CONTROL

PART 3 EXECUTION

3.01 PREPARATION
3.02 ERECTION, INSTALLATION AND APPLICATION
3.03 FIELD QUALITY CONTROL
3.04 ADJUSTING AND CLEANING
3.05 DEMONSTRATION
3.06 PROTECTION

APPENDIX

APPENDIX A DATA SHEETS

AW3227.0384

WRAP MODULE 2A

SECTION 14470

SCISSOR LIFT TABLE

PART 1 GENERAL

1.01 SECTION SCOPE

A. This specification establishes the requirements for detailed design and fabrication of Scissor Lift a mechanism for lifting drums into processing equipment in facility.

1.02 RELATED SECTIONS

1.03 REFERENCES

A. Anti-Friction Bearing Manufacturer's Association (AFBMA)
AFBMA All applicable sections.

B. American National Standards Institute (ANSI)
ANSI All applicable sections.

C. American Society for Testing and Materials (ASTM)
ASTM All applicable sections.

D. American Welding Society (AWS)
AWS "Structural Welding Code."

E. Occupational Safety and Health Administration (OSHA)
OSHA 29 CFR Part 1910

F. National Electric Code (NEC)
NEC All applicable sections.

G. National Electric Manufacturers Association (NEMA)
NEMA MG-1 Motors and Generators

H. American Gear Manufacturers Association (AGMA)
AGMA All applicable sections.

I. Mechanical Power Transmission Association (MPTA)
MPTA ND 301 All applicable sections.

94/3227.0385

1.04 SYSTEM DESCRIPTION

A. A self-contained unit, consisting of a verticle lifting table, with provisions to mount the required equipment on the table.

The lift table travel range will be monitored by position controls, that can position the table in any position within the lift travel range.

B. Data Sheets

Equipment Tag Nos. WBS Area Location Numbers and equipment data sheets for this description are provided in **Appendix A.**

END OF SECTION

9413227.0386

WRAP MODULE 2A

APPENDIX A

EQUIPMENT/INSTRUMENT DATA SHEETS

WBS LOCATION	EQUIPMENT TAG	SERVICE
1105	LT-05-202	Lift Table
1105	LT-05-203	Lift Table
1105	LT-05-201	Lift Table
1105	LT-05-521	Lift Table (Drum Entry)
1105	LT-05-522	Lift Table (Non-Shreddable Items)
1105	LT-05-523 A;B	Lift Table (Drum Exit)
1105	LT-05-541	Lift Table (Drum Entry)
1105	LT-05-542	Lift Table (Non-Pug Mill Processable Items)
1105	LT-05-543	Lift Table (Drum Exit)
1105	LT-05-561	Lift Table (Drum Exit)
1105	LT-05-640	Lift Table
1105	LT-05-641	Lift Table
1106	LT-06-101	Lift Table (Drum Entry)
1106	LT-06-102	Lift Table (Drum Exit)

94/3227.0387

WRAP MODULE 2A

1106	LT-06-201	Lift Table (Drum Exit)
1105	LT-05-401	Lift Table
1105	LT-05-402	Lift Table
1105	LT-05-403	Lift Table
1105	LT-05-404	Lift Table

9413227.0388

UNITED ENGINEERS & CONSTRUCTORS A Raytheon Company Western Operations	EQUIPMENT DATA SHEET ☒ CDR ☐ TITLE I ☐ TITLE II ☐ TITLE III	ITEM NUMBER LT-05-201	PAGE 1 OF 1

CUSTOMER & LOCATION	PROJECT	UE&C JOB NO. 6237.006	DATE: 05/21/92
DOE-RL/WHC HANFORD, WA	WRAP FACILITY MODULE 2A	ACCOUNT NO.	BY: JPJ

REVISIONS (DATE & BY)	A		B		C		D	
	E		F		G		H	

SERVICE	MANUFACTURER	NO. REQ'D.	SOURCE OF QUOTE
LIFT TABLE		1	

LIFT TABLE

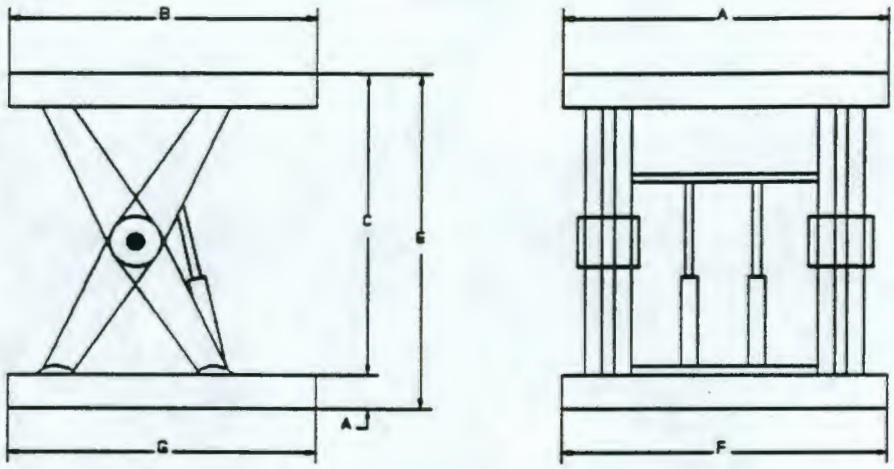

CONDITIONS OF SERVICE		DIMENSIONS	
APPLICATION: VIBRO GROUT MIXING STATION		A: 36"	F:
UNIT LOAD DESCRIPTION: 55 GAL DRUMS		B: 48"	G:
UNIT LOAD SIZE: 22.5" DIA X 34.5" HIGH	RAISING TIME: 26 SECONDS	C:	H:
UNIT LOAD WEIGHT: 1,000 LBS	DUTY: 8 HOURS/DAY	D:	I:
IMPACT LOADING: MODERATE	REPEATABILITY: +/- 0.125"	E:	J:
RAISED HEIGHT: 3'-8"	NEC AREA CLASS: UNCLASSIFIED		
LOWERED HEIGHT: 1'-9" +/-			
LOCATION:			
CONSTRUCTION			
LIFT TABLE DRIVE: HYDRAULIC	LIFT CAPACITY:		
MOTOR RATING: 1.5 HP	NEMA ENCLOSURE:		
WEIGHT: 860 LBS	PLATFORM END LOAD:		
MATERIAL: CARBON STEEL	PLATFORM SIDE LOAD:		
BASE FRAME SIZE:			
PLATFORM SIZE: 36" X 48"			
NO OF CYLINDERS: 2			
CYLINDER SIZE:			
HYDRAULIC PUMP MOTOR HP:			
TYPE OF CONTROLS:			
MOTOR/REDUCER CONN.: DIRECT			

UNITED ENGINEERS & CONSTRUCTORS A Raytheon Company Western Operations	EQUIPMENT DATA SHEET ☒ CDR ☐ TITLE I ☐ TITLE II ☐ TITLE III	ITEM NUMBER LT-05-202	PAGE 1 OF 1

CUSTOMER & LOCATION	PROJECT	UE&C JOB NO. 6237.006	DATE: 05/21/92
DOE-RL/WHC HANFORD, WA	WRAP FACILITY MODULE 2A	ACCOUNT NO.	BY: JPJ

REVISIONS (DATE & BY)	A		B		C		D	
	E		F		G		H	

SERVICE	MANUFACTURER	NO. REQ'D.	SOURCE OF QUOTE
LIFT TABLE		1	

LIFT TABLE

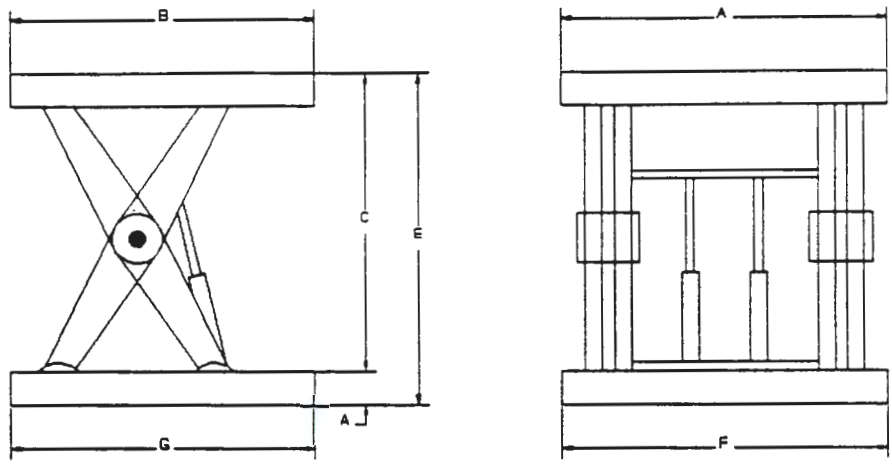

CONDITIONS OF SERVICE		DIMENSIONS	
APPLICATION: AGITATED GROUT MIXING STATION		A: 36"	F:
UNIT LOAD DESCRIPTION: 55 GAL DRUMS		B: 48"	G:
UNIT LOAD SIZE: 22.5" DIA X 34.5" HIGH	RAISING TIME: 26 SECONDS	C:	H:
UNIT LOAD WEIGHT: 1,000 LBS	DUTY: 8 HOURS/DAY	D:	I:
IMPACT LOADING: MODERATE	REPEATABILITY: +/- 0.125"	E:	J:
RAISED HEIGHT: 3'-8"	NEC AREA CLASS: UNCLASSIFIED		
LOWERED HEIGHT: 1'-9" +/-			
LOCATION:			
CONSTRUCTION			
LIFT TABLE DRIVE: HYDRAULIC	LIFT CAPACITY:		
MOTOR RATING: 1.5 HP	NEMA ENCLOSURE:		
WEIGHT: 860 LBS	PLATFORM END LOAD:		
MATERIAL: CARBON STEEL	PLATFORM SIDE LOAD:		
BASE FRAME SIZE:			
PLATFORM SIZE: 36" X 48"			
NO OF CYLINDERS: 2			
CYLINDER SIZE:			
HYDRAULIC PUMP MOTOR HP:			
TYPE OF CONTROLS:			
MOTOR/REDUCER CONN.: DIRECT			

UNITED ENGINEERS & CONSTRUCTORS A Raytheon Company Western Operations	EQUIPMENT DATA SHEET ☒ CDR ☐ TITLE I ☐ TITLE II ☐ TITLE III	ITEM NUMBER LT-05-203	PAGE 1 OF 1

CUSTOMER & LOCATION	PROJECT	UE&C JOB NO. 6237.006	DATE: 05/21/92
DOE-RL/WHC HANFORD, WA	WRAP FACILITY MODULE 2A	ACCOUNT NO.	BY: JPJ

REVISIONS (DATE & BY)	A		B		C		D	
	E		F		G		H	

SERVICE	MANUFACTURER	NO. REQ'D.	SOURCE OF QUOTE
LIFT TABLE		1	

LIFT TABLE

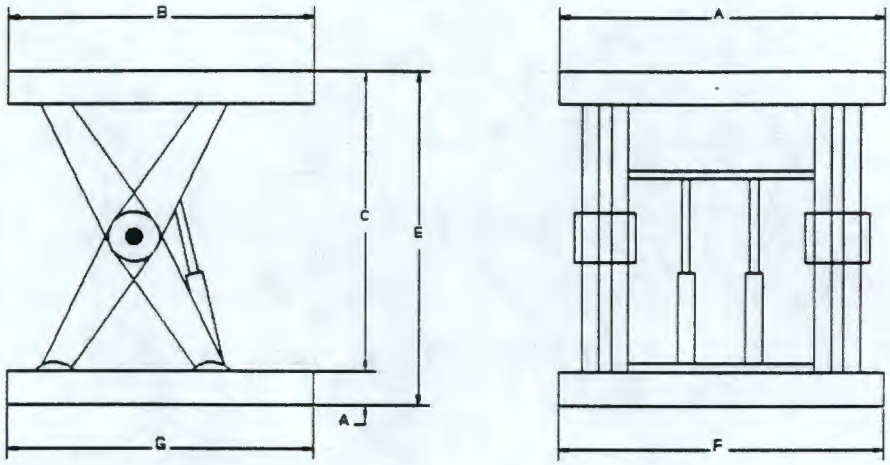

CONDITIONS OF SERVICE		DIMENSIONS	
APPLICATION: AGITATED GROUT MIXING STATION		A: 36"	F:
UNIT LOAD DESCRIPTION: 55 GAL DRUMS		B: 48"	G:
UNIT LOAD SIZE: 22.5" DIA X 34.5" HIGH	RAISING TIME: 26 SECONDS	C:	H:
UNIT LOAD WEIGHT: 1,000 LBS	DUTY: 8 HOURS/DAY	D:	I:
IMPACT LOADING: MODERATE	REPEATABILITY: +/- 0.125"	E:	J:
RAISED HEIGHT: 3'-8"	NEC AREA CLASS: UNCLASSIFIED		
LOWERED HEIGHT: 1'-9" +/-			
LOCATION:			
CONSTRUCTION			
LIFT TABLE DRIVE: HYDRAULIC	LIFT CAPACITY:		
MOTOR RATING: 1.5 HP	NEMA ENCLOSURE:		
WEIGHT: 860 LBS	PLATFORM END LOAD:		
MATERIAL: CARBON STEEL	PLATFORM SIDE LOAD:		
BASE FRAME SIZE:			
PLATFORM SIZE: 36" X 48"			
NO OF CYLINDERS: 2			
CYLINDER SIZE:			
HYDRAULIC PUMP MOTOR HP:			
TYPE OF CONTROLS:			
MOTOR/REDUCER CONN.: DIRECT			

UNITED ENGINEERS & CONSTRUCTORS A Raytheon Company Western Operations	EQUIPMENT DATA SHEET ☒ CDR ☐ TITLE I ☐ TITLE II ☐ TITLE III	ITEM NUMBER LT-05-521	PAGE 1 OF 2

CUSTOMER & LOCATION	PROJECT	UE&C JOB NO. 6237.006	DATE: 04/13/92
DOE-RL/WHC HANFORD, WA	WRAP FACILITY MODULE 2A	ACCOUNT NO.	BY: SAS

REVISIONS (DATE & BY)	A		B		C		D	
	E		F		G		H	

SERVICE	MANUFACTURER	NO. REQ'D.	SOURCE OF QUOTE
LIFT TABLE		1	

LIFT TABLE

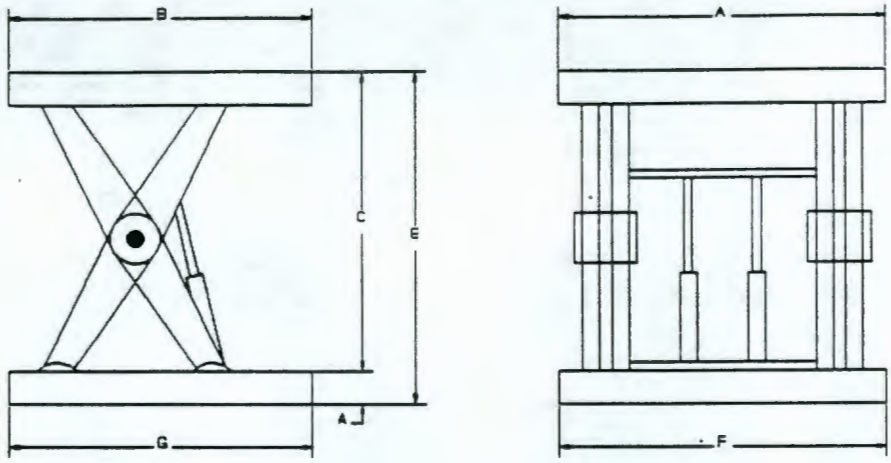

CONDITIONS OF SERVICE		DIMENSIONS	
APPLICATION: LIFT DRUMS CONTAINING LLRMW TO THE SHREDDER & REPACK ENCLOSURE		A: 36"	F:
UNIT LOAD DESCRIPTION: 55 & 85 GAL DRUMS CONTAINING LLRMW		B: 84"	G:
UNIT LOAD SIZE: 26" DIA X 39" HIGH	RAISING TIME: 26 SECONDS	C:	H:
UNIT LOAD WEIGHT: 3,000 LBS	DUTY: 8 HOURS/DAY	D:	I:
IMPACT LOADING: MODERATE	REPEATABILITY: +/- 0.125"	E:	J:
RAISED HEIGHT: 48.5"	NEC AREA CLASS: UNCLASSIFIED		
LOWERED HEIGHT: 6.5"			
LOCATION: SIZE REDUCTION AND REPACK CELL			
CONSTRUCTION			
LIFT TABLE DRIVE: HYDRAULIC			
MOTOR RATING: 1.5 HP			
WEIGHT: 860 LBS			
MATERIAL: CARBON STEEL			

9413227.0392

UNITED ENGINEERS & CONSTRUCTORS A Raytheon Company Western Operations	EQUIPMENT DATA SHEET ☒ CDR ☐ TITLE I ☐ TITLE II ☐ TITLE III	ITEM NUMBER LT-05-521	PAGE 2 OF 2
CUSTOMER & LOCATION DOE-RL/WHC HANFORD, WA	PROJECT WRAP FACILITY MODULE 2A	UE&C JOB NO. 6237.006 / ACCOUNT NO.	DATE: 04/13/92 / BY: SAS

REVISIONS (DATE & BY)	A		B		C		D	
	E		F		G		H	

SERVICE	MANUFACTURER	NO. REQ'D.	SOURCE OF QUOTE
LIFT TABLE CONVEYOR		1	

CHAIN DRIVEN LIVE ROLLER CONVEYOR

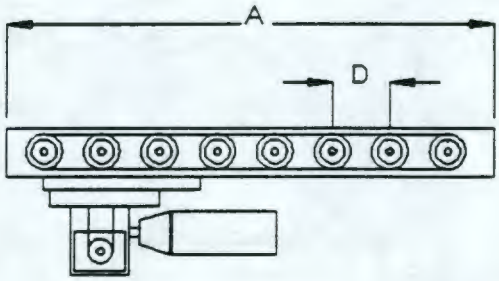

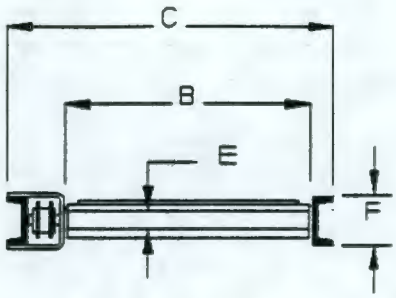

CONDITIONS OF SERVICE		DIMENSIONS	
APPLICATION: DRUM TRANSFER BETWEEN TRANSFER CAR AND LIFT TABLE		A: 84"	E:
UNIT LOAD DESCRIPTION: 55 AND 85 GAL DRUMS CONTAING LLRMW		B: 36"	F:
UNIT LOAD SIZE: 26" DIA X 39" HIGH	SPEED:	C:	G:
UNIT LOAD WEIGHT: 3,000 LBS	DUTY: 8 HOURS/DAY	D:	H:
IMPACT LOADING: MODERATE	CONVEYOR PITCH/SLOPE:		
LOCATION: SIZE REDUCTION AND REPACK CELL	NEC AREA CLASS: UNCLASSIFIED		
CONSTRUCTION			
LIFT TABLE DRIVE:			
MOTOR RATING:			
WEIGHT:			
MATERIAL:			

UNITED ENGINEERS & CONSTRUCTORS A Raytheon Company Western Operations	EQUIPMENT DATA SHEET ☒ CDR ☐ TITLE I ☐ TITLE II ☐ TITLE III	ITEM NUMBER LT-05-522	PAGE 1 OF 2

CUSTOMER & LOCATION	PROJECT	UE&C JOB NO. 6237.006	DATE: 04/13/92
DOE-RL/WHC HANFORD, WA	WRAP FACILITY MODULE 2A	ACCOUNT NO. 1105	BY: SAS

REVISIONS (DATE & BY)	A		B		C		D	
	E		F		G		H	

SERVICE	MANUFACTURER	NO. REQ'D.	SOURCE OF QUOTE
LIFT TABLE		1	

LIFT TABLE

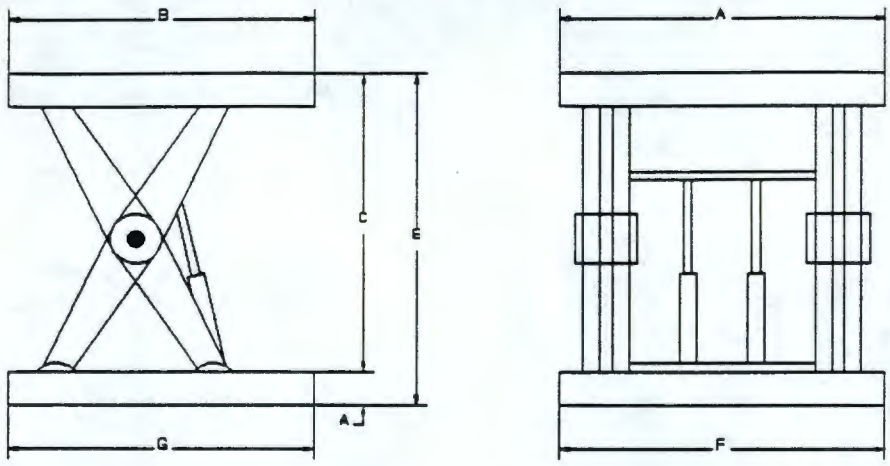

CONDITIONS OF SERVICE		DIMENSIONS	
APPLICATION: LOWER DRUM CONTAING NONSHREDDABLE WASTE FROM SHREDDER & REPACK ENCLOSURE		A: 36"	F:
UNIT LOAD DESCRIPTION: NONCOMPLIENT ITEMS OF LLRMW		B: 84"	G:
UNIT LOAD SIZE: 22.5" DIA X 34.5" HIGH	RAISING TIME: 26 SECONDS	C:	H:
UNIT LOAD WEIGHT: 1,000 LBS	DUTY: 8 HOURS/DAY	D:	I:
IMPACT LOADING: MODERATE	REPEATABILITY: +/- 0.125"	E:	J:
RAISED HEIGHT: 48.5"	NEC AREA CLASS: UNCLASSIFIED		
LOWERED HEIGHT: 6.5"			
LOCATION: SIZE REDUCTION AND REPACK CELL			
CONSTRUCTION			
LIFT TABLE DRIVE: HYDRAULIC			
MOTOR RATING HP: 1.5			
WEIGHT: 860 LBS			
MATERIAL: CARBON STEEL			

9413227.0394

UNITED ENGINEERS & CONSTRUCTORS A Raytheon Company Western Operations	EQUIPMENT DATA SHEET ☒ CDR ☐ TITLE I ☐ TITLE II ☐ TITLE III	ITEM NUMBER LT-05-522	PAGE 2 OF 2
CUSTOMER & LOCATION DOE-RL/WHC HANFORD, WA	PROJECT WRAP FACILITY MODULE 2A	UE&C JOB NO. 6237.006	DATE: 04/13/92
		ACCOUNT NO. 1105	BY: SAS

REVISIONS (DATE & BY)	A		B		C		D	
	E		F		G		H	

SERVICE	MANUFACTURER	NO. REQ'D.	SOURCE OF QUOTE
LIFT TABLE CONVEYOR		1	

CHAIN DRIVEN LIVE ROLLER CONVEYOR

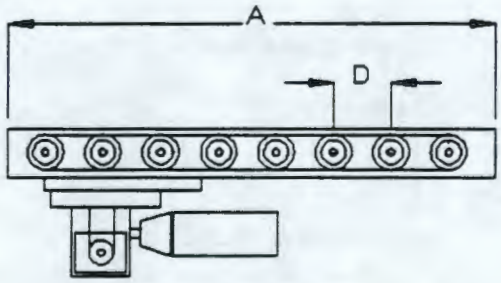

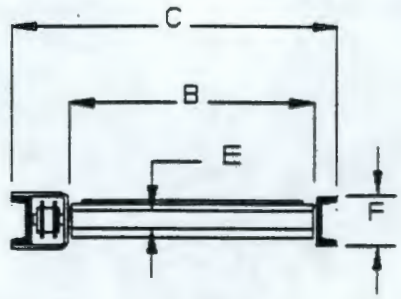

CONDITIONS OF SERVICE		DIMENSIONS	
APPLICATION: DRUM TRANSFER FROM LIFT TABLE ONTO PALLET TRUCK		A: 84"	E:
UNIT LOAD DESCRIPTION: 55 GAL DRUMS CONTAINING LLRMW		B: 36"	F:
UNIT LOAD SIZE: 22.5" DIA X 34.5" HIGH	SPEED:	C:	G:
UNIT LOAD WEIGHT: 1,000 LBS	DUTY: 8 HOURS/DAY	D:	H:
IMPACT LOADING: MODERATE	CONVEYOR PITCH/SLOPE:		
LOCATION: SIZE REDUCTION AND REPACK CELL	NEC AREA CLASS: UNCLASSIFIED		
CONSTRUCTION			
LIFT TABLE DRIVE:			
MOTOR RATING HP:			
WEIGHT:			
MATERIAL:			

UNITED ENGINEERS & CONSTRUCTORS A Raytheon Company Western Operations	EQUIPMENT DATA SHEET ☒ CDR ☐ TITLE I ☐ TITLE II ☐ TITLE III	ITEM NUMBER LT-05-523A,B	PAGE 1 OF 2

CUSTOMER & LOCATION	PROJECT	UE&C JOB NO. 6237.006	DATE: 04/13/92
DOE-RL/WHC HANFORD, WA	WRAP FACILITY MODULE 2A	ACCOUNT NO.	BY: SAS

REVISIONS (DATE & BY)	A		B		C		D	
	E		F		G		H	

SERVICE	MANUFACTURER	NO. REQ'D.	SOURCE OF QUOTE
LIFT TABLE		2	

LIFT TABLE

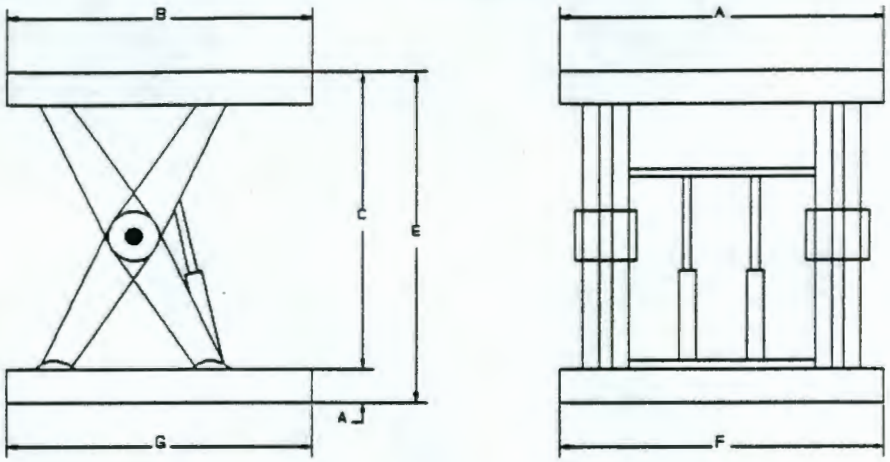

CONDITIONS OF SERVICE		DIMENSIONS	
APPLICATION: LOWER DRUMS CONTAINING REPACKED LLRMW FROM SHREDDER AND REPACK ENCLOSURE		A: 36"	F:
UNIT LOAD DESCRIPTION: 55 GALLON DRUMS CONTAINING LLRMW		B: 84"	G:
UNIT LOAD SIZE: 22.5" DIA X 34.5" HIGH	RAISING TIME: 26 SECONDS	C:	H:
UNIT LOAD WEIGHT: 1,000 LBS	DUTY: 8 HOURS/DAY	D:	I:
IMPACT LOADING: MODERATE	REPEATABILITY: +/- 0.125"	E:	J:
RAISED HEIGHT: 48.5"	NEC AREA CLASS: UNCLASSIFIED		
LOWERED HEIGHT: 6.5"			
LOCATION: SIZE REDUCTION AND REPACK CELL			
CONSTRUCTION			
LIFT TABLE DRIVE: HYDRAULIC			
MOTOR RATING HP: 1.5			
WEIGHT: 860 LBS			
MATERIAL: CARBON STEEL			

9413227.0396

UNITED ENGINEERS & CONSTRUCTORS A Raytheon Company Western Operations	EQUIPMENT DATA SHEET ☒ CDR ☐ TITLE I ☐ TITLE II ☐ TITLE III	ITEM NUMBER LT-05-523AB	PAGE 2 OF 2
CUSTOMER & LOCATION DOE-RL/WHC HANFORD, WA	PROJECT WRAP FACILITY MODULE 2A	UE&C JOB NO. 6237.006	DATE: 04/13/92
		ACCOUNT NO.	BY: SAS

REVISIONS (DATE & BY)	A		B		C		D	
	E		F		G		H	

SERVICE	MANUFACTURER	NO. REQ'D.	SOURCE OF QUOTE
LIFT TABLE CONVEYOR		2	

CHAIN DRIVEN LIVE ROLLER CONVEYOR

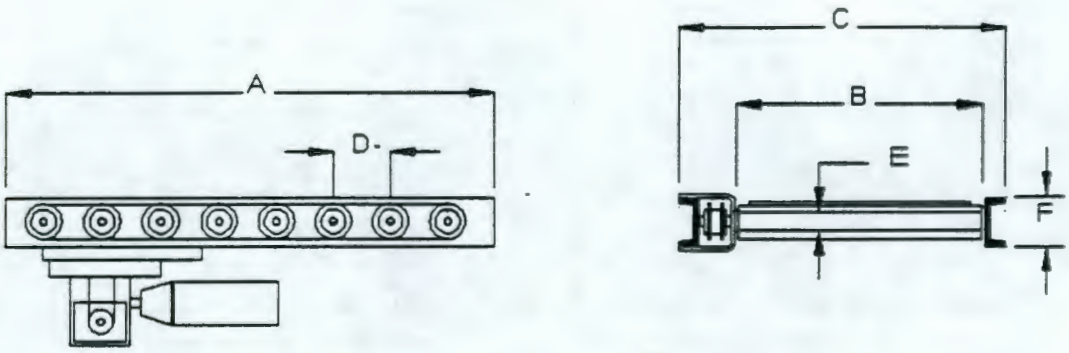

CONDITIONS OF SERVICE		DIMENSIONS	
APPLICATION: DRUM TRANSFER BETWEEN LIFT TABLE AND AGV		A: 84"	E:
UNIT LOAD DESCRIPTION: 55 GALLON DRUMS CONTAINING LLRMW		B: 36"	F:
UNIT LOAD SIZE: 22.5" DIA X 34.5" HIGH	SPEED:	C:	G:
UNIT LOAD WEIGHT: 1,000 LBS	DUTY: 8 HOURS/DAY	D:	H:
IMPACT LOADING: MODERATE	CONVEYOR PITCH/SLOPE:		
LOCATION: SIZE REDUCTION AND REPACK CELL	NEC AREA CLASS: UNCLASSIFIED		
CONSTRUCTION			
LIFT TABLE DRIVE:			
MOTOR RATING HP:			
WEIGHT:			
MATERIAL:			

9413227.0397

UNITED ENGINEERS & CONSTRUCTORS A Raytheon Company Western Operations	EQUIPMENT DATA SHEET ☒ CDR ☐ TITLE I ☐ TITLE II ☐ TITLE III	ITEM NUMBER LT-05-541	PAGE 1 OF 2

CUSTOMER & LOCATION	PROJECT	UE&C JOB NO. 6237.006	DATE: 04/13/92
DOE-RL/WHC HANFORD, WA	WRAP FACILITY MODULE 2A	ACCOUNT NO.	BY: SAS

REVISIONS (DATE & BY)	A		B		C		D	
	E		F		G		H	

SERVICE	MANUFACTURER	NO. REQ'D.	SOURCE OF QUOTE
LIFT TABLE		1	

LIFT TABLE

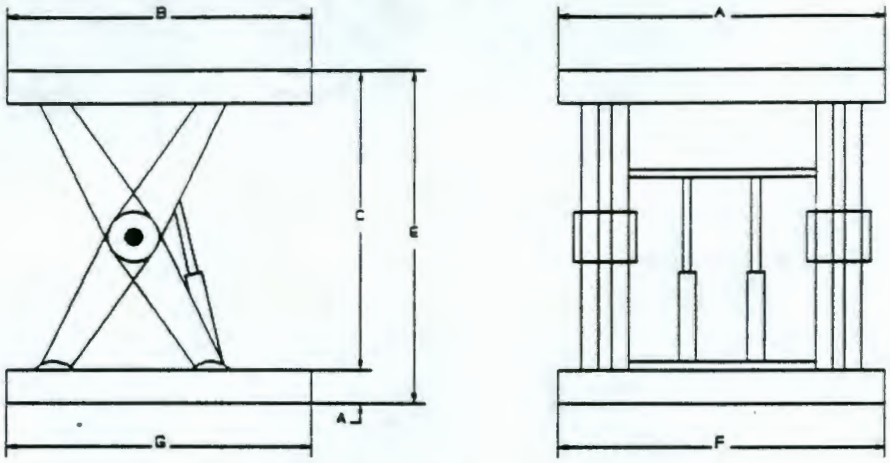

CONDITIONS OF SERVICE		DIMENSIONS	
APPLICATION: LIFT DRUMS CONTAINING LLRMW TO THE PUG MILL ENCLOSURE		A: 36"	F:
UNIT LOAD DESCRIPTION: 55 AND 85 GALLON DRUMS CONTAINING LLRMW		B: 84"	G:
UNIT LOAD SIZE: 26" DIA X 39" HIGH	RAISING TIME: 26 SECONDS	C:	H:
UNIT LOAD WEIGHT: 3,000 LBS	DUTY: 8 HOURS/DAY	D:	I:
IMPACT LOADING: MODERATE	REPEATABILITY: +/- 0.125"	E:	J:
RAISED HEIGHT: 48.5"	NEC AREA CLASS: UNCLASSIFIED		
LOWERED HEIGHT: 6.5"			
LOCATION: SIZE REDUCTION AND REPACK CELL			
CONSTRUCTION			
LIFT TABLE DRIVE: HYDRAULIC			
MOTOR RATING: 1.5 HP			
WEIGHT: 860 LBS			
MATERIAL: CARBON STEEL			

9413227.0398

UNITED ENGINEERS & CONSTRUCTORS A Raytheon Company Western Operations	EQUIPMENT DATA SHEET ☒ CDR ☐ TITLE I ☐ TITLE II ☐ TITLE III	ITEM NUMBER LT-05-541	PAGE 2 OF 2

CUSTOMER & LOCATION	PROJECT	UE&C JOB NO. 6237.006	DATE: 04/13/92
DOE-RL/WHC HANFORD, WA	WRAP FACILITY MODULE 2A	ACCOUNT NO.	BY: SAS

REVISIONS (DATE & BY)	A		B		C		D	
	E		F		G		H	

SERVICE	MANUFACTURER	NO. REQ'D.	SOURCE OF QUOTE
LIFT TABLE CONVEYOR		1	

CHAIN DRIVEN LIVE ROLLER CONVEYOR

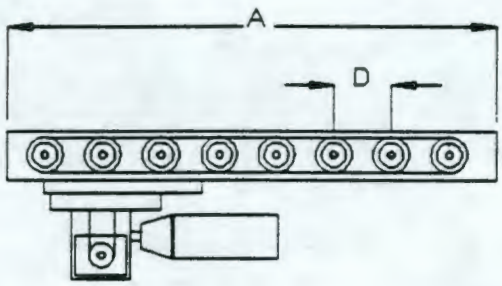

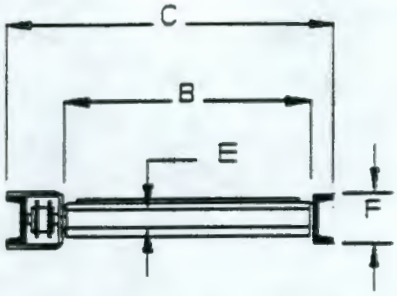

CONDITIONS OF SERVICE		DIMENSIONS	
APPLICATION: DRUM TRANSFER BETWEEN TRANSFER CAR AND LIFT TABLE		A:	E:
UNIT LOAD DESCRIPTION: 55 AND 85 GALLON DRUMS CONTAINING LLRMW		B:	F:
UNIT LOAD SIZE: 26" DIA X 39" HIGH	SPEED:	C:	G:
UNIT LOAD WEIGHT: 3,000 LBS	DUTY: 8 HOURS/DAY	D:	H:
IMPACT LOADING: MODERATE	CONVEYOR PITCH/SLOPE:		
LOCATION: SIZE REDUCTION AND REPACK CELL	NEC AREA CLASS: UNCLASSIFIED		
CONSTRUCTION			
LIFT TABLE DRIVE:			
MOTOR RATING:			
WEIGHT:			
MATERIAL:			

UNITED ENGINEERS & CONSTRUCTORS A Raytheon Company Western Operations	EQUIPMENT DATA SHEET ☒ CDR ☐ TITLE I ☐ TITLE II ☐ TITLE III	ITEM NUMBER LT-05-542	PAGE 1 OF 2
CUSTOMER & LOCATION DOE-RL/WHC HANFORD, WA	PROJECT WRAP FACILITY MODULE 2A	UE&C JOB NO. 6237.006 / ACCOUNT NO.	DATE: 04/13/92 / BY: SAS

REVISIONS (DATE & BY)	A		B		C		D	
	E		F		G		H	

SERVICE	MANUFACTURER	NO. REQ'D.	SOURCE OF QUOTE
LIFT TABLE		1	

LIFT TABLE

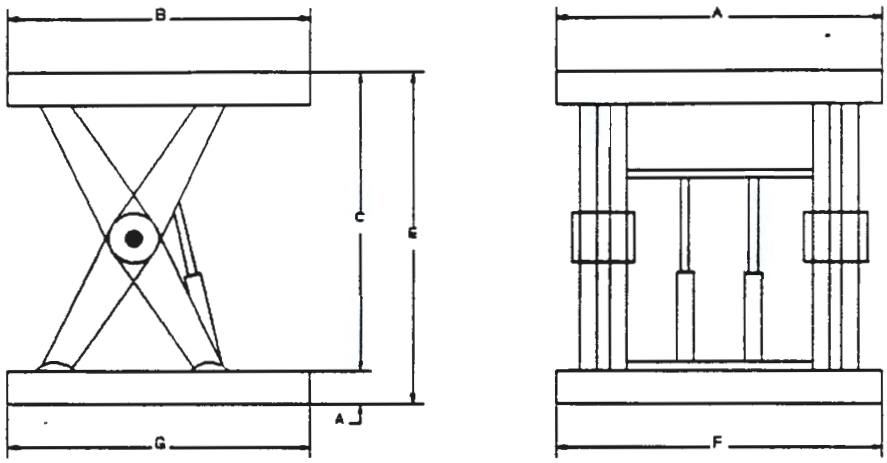

CONDITIONS OF SERVICE		DIMENSIONS	
APPLICATION: WASTE TRANSFER FROM PUG MILL ENCLOSURE		A:	F:
UNIT LOAD DESCRIPTION: ITEMS OF WASTE UNSUITABLE FOR PUG MILL PROCESSING		B:	G:
UNIT LOAD SIZE: 22.5" DIA X 34.5" HIGH	RAISING TIME: 26 SECONDS	C:	H:
UNIT LOAD WEIGHT: 1,000 LBS	DUTY: 8 HOURS/DAY	D:	I:
IMPACT LOADING: MODERATE	REPEATABILITY: +/- 0.125"	E:	J:
RAISED HEIGHT: 48.5"	NEC AREA CLASS: UNCLASSIFIED		
LOWERED HEIGHT: 6.5"			
LOCATION: SIZE REDUCTION AND REPACK CELL			
CONSTRUCTION			
LIFT TABLE DRIVE: HYDRAULIC			
MOTOR RATING: 1.5 HP			
WEIGHT: 860 LBS			
MATERIAL: CARBON STEEL			

UNITED ENGINEERS & CONSTRUCTORS A Raytheon Company Western Operations	EQUIPMENT DATA SHEET ☒ CDR ☐ TITLE I ☐ TITLE II ☐ TITLE III	ITEM NUMBER LT-05-542	PAGE 2 OF 2

CUSTOMER & LOCATION	PROJECT	UE&C JOB NO. 6237.006	DATE: 04/13/92
DOE-RL/WHC HANFORD, WA	WRAP FACILITY MODULE 2A	ACCOUNT NO.	BY: SAS

REVISIONS (DATE & BY)	A		B		C		D	
	E		F		G		H	

SERVICE	MANUFACTURER	NO. REQ'D.	SOURCE OF QUOTE
LIFT TABLE CONVEYOR		1	

CHAIN DRIVEN LIVE ROLLER CONVEYOR

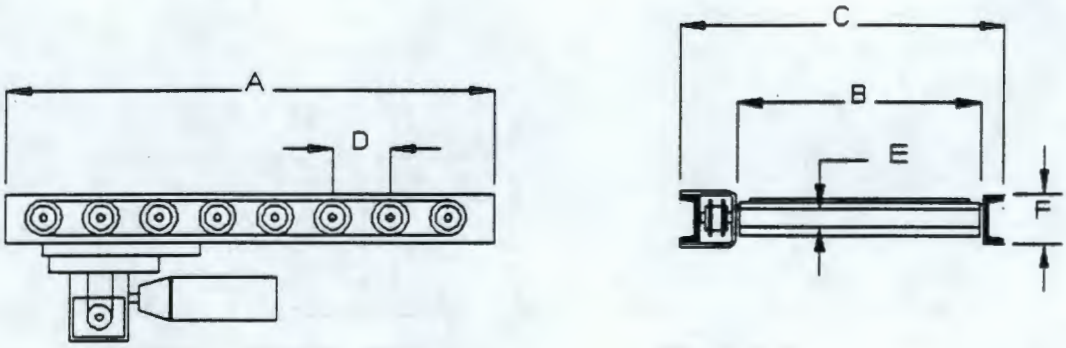

CONDITIONS OF SERVICE		DIMENSIONS	
APPLICATION: DRUM TRANSFER FROM LIFT TABLE ONTO PALLET TRUCK		A:	E:
UNIT LOAD DESCRIPTION: 55 GALLON DRUMS CONTAINING LLRMW		B:	F:
UNIT LOAD SIZE: 22.5" DIA X 34.5" HIGH	SPEED:	C:	G:
UNIT LOAD WEIGHT: 1,000 LBS	DUTY: 8 HOURS/DAY	D:	H:
IMPACT LOADING: MODERATE	CONVEYOR PITCH/SLOPE:		
LOCATION: SIZE REDUCTION AND REPACK CELL	NEC AREA CLASS: UNCLASSIFIED		
CONSTRUCTION			
LIFT TABLE DRIVE:			
MOTOR RATING:			
WEIGHT:			
MATERIAL:			

UNITED ENGINEERS & CONSTRUCTORS A Raytheon Company Western Operations	EQUIPMENT DATA SHEET ☒ CDR ☐ TITLE I ☐ TITLE II ☐ TITLE III	ITEM NUMBER LT-05-543	PAGE 1 OF 2

CUSTOMER & LOCATION	PROJECT	UE&C JOB NO. 6237.006	DATE: 04/13/92
DOE-RL/WHC HANFORD, WA	WRAP FACILITY MODULE 2A	ACCOUNT NO.	BY: SAS

REVISIONS (DATE & BY)	A		B		C		D	
	E		F		G		H	

SERVICE	MANUFACTURER	NO. REQ'D.	SOURCE OF QUOTE
DRUM LIFT TABLE		1	

LIFT TABLE

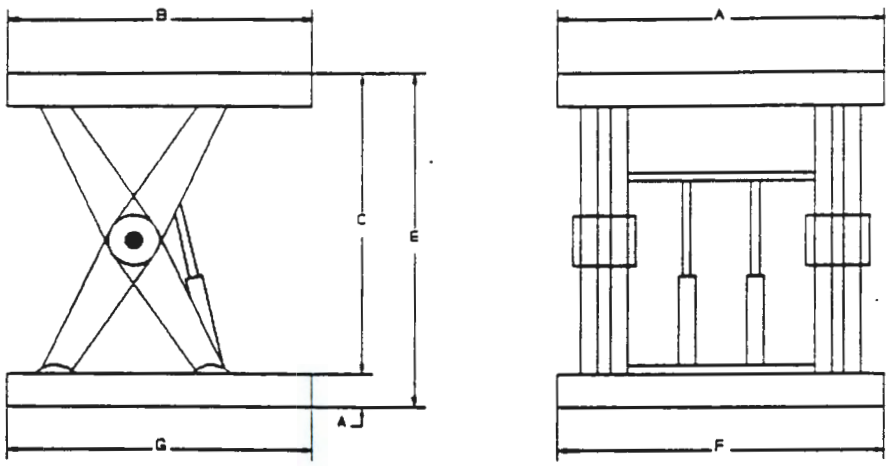

CONDITIONS OF SERVICE		DIMENSIONS	
APPLICATION: LOWER DRUMS CONTAINING REPACKED LLRMW FROM PUG MILL ENCLOSURE		A:	F:
UNIT LOAD DESCRIPTION: 55 GAL DRUMS CONTAINING LLRMW		B:	G:
UNIT LOAD SIZE: 22.5" DIA X 34.5" HIGH	RAISING TIME: 26 SECONDS	C:	H:
UNIT LOAD WEIGHT: 1,000 LBS	DUTY: 8 HOURS/DAY	D:	I:
IMPACT LOADING: MODERATE	REPEATABILITY: +/- 0.125"	E:	J:
RAISED HEIGHT: 48.5"	NEC AREA CLASS: UNCLASSIFIED		
LOWERED HEIGHT: 6.5"			
LOCATION: SIZE REDUCTION AND REPACK CELL			
CONSTRUCTION			
LIFT TABLE DRIVE: HYDRAULIC			
MOTOR RATING: 1.5 HP			
WEIGHT: 860 LBS			
MATERIAL: CARBON STEEL			

UNITED ENGINEERS & CONSTRUCTORS A Raytheon Company Western Operations	EQUIPMENT DATA SHEET ☒ CDR ☐ TITLE I ☐ TITLE II ☐ TITLE III	ITEM NUMBER LT-05-543	PAGE 2 OF 2
CUSTOMER & LOCATION DOE-RL/WHC HANFORD, WA	PROJECT WRAP FACILITY MODULE 2A	UE&C JOB NO. 6237.006 / ACCOUNT NO.	DATE: 04/13/92 / BY: SAS

REVISIONS (DATE & BY)	A		B		C		D	
	E		F		G		H	

SERVICE	MANUFACTURER	NO. REQ'D.	SOURCE OF QUOTE
DRUM LIFT TABLE CONVEYOR		1	

CHAIN DRIVEN LIVE ROLLER CONVEYOR

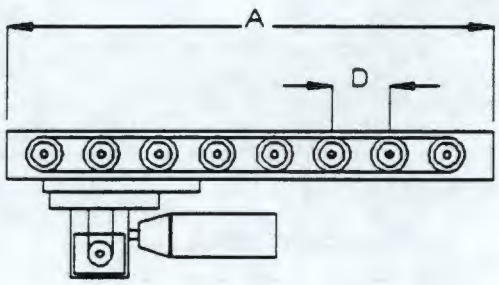

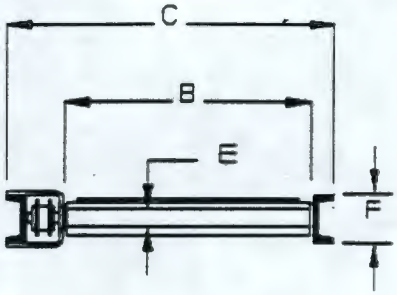

CONDITIONS OF SERVICE		DIMENSIONS	
APPLICATION: DRUM TRANSFER BETWEEN LIFT TABLE AND AGV		A:	E:
UNIT LOAD DESCRIPTION: 55 GALLON DRUMS CONTAINING LLRMW		B:	F:
UNIT LOAD SIZE: 22.5" DIA X 34.5" HIGH	SPEED:	C:	G:
UNIT LOAD WEIGHT: 1,000 LBS	DUTY: 8 HOURS/DAY	D:	H:
IMPACT LOADING: MODERATE	CONVEYOR PITCH/SLOPE:		
LOCATION: SIZE REDUCTION AND REPACK CELL	NEC AREA CLASS: UNCLASSIFIED		
CONSTRUCTION			
LIFT TABLE DRIVE:			
MOTOR RATING:			
WEIGHT:			
MATERIAL:			

UNITED ENGINEERS & CONSTRUCTORS A Raytheon Company Western Operations	EQUIPMENT DATA SHEET ☒ CDR ☐ TITLE I ☐ TITLE II ☐ TITLE III	ITEM NUMBER LT-05-561	PAGE 1 OF 2

CUSTOMER & LOCATION	PROJECT	UE&C JOB NO. 6237.006	DATE: 04/13/92
DOE-RL/WHC HANFORD, WA	WRAP FACILITY MODULE 2A	ACCOUNT NO.	BY: SAS

REVISIONS (DATE & BY)	A		B		C		D	
	E		F		G		H	

SERVICE	MANUFACTURER	NO. REQ'D.	SOURCE OF QUOTE
LIFT TABLE		1	

LIFT TABLE

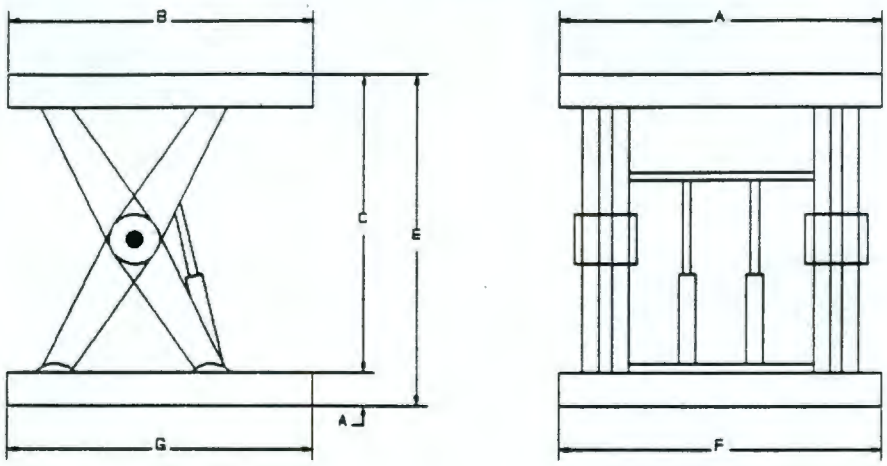

CONDITIONS OF SERVICE		DIMENSIONS	
APPLICATION: LIFT TABLES CONTAINING LLRMW FROM BOX BREAKDOWN CELL		A: 36"	F:
UNIT LOAD DESCRIPTION: 55 GALLON DRUMS CONTAINING LLRMW INSIDE OVERPACK		B: 84"	G:
UNIT LOAD SIZE: 26" DIA X 39" HIGH	RAISING TIME: 26 SECONDS	C:	H:
UNIT LOAD WEIGHT: 3,000 LBS	DUTY: 8 HOURS/DAY	D:	I:
IMPACT LOADING: MODERATE	REPEATABILITY: +/- 0.125"	E:	J:
RAISED HEIGHT: 48.5"	NEC AREA CLASS: UNCLASSIFIED		
LOWERED HEIGHT: 6.5"			
LOCATION: SIZE REDUCTION AND REPACK CELL			
CONSTRUCTION			
LIFT TABLE DRIVE: HYDRAULIC			
MOTOR RATING: 1.5 HP			
WEIGHT: 860 LBS			
MATERIAL: CARBON STEEL			

9413227.0404

UNITED ENGINEERS & CONSTRUCTORS A Raytheon Company Western Operations	EQUIPMENT DATA SHEET ☒ CDR ☐ TITLE I ☐ TITLE II ☐ TITLE III	ITEM NUMBER LT-05-561	PAGE 2 OF 2
CUSTOMER & LOCATION DOE-RL/WHC HANFORD, WA	PROJECT WRAP FACILITY MODULE 2A	UE&C JOB NO. 6237.006 / ACCOUNT NO.	DATE: 04/13/92 / BY: SAS

REVISIONS (DATE & BY)	A		B		C		D	
	E		F		G		H	

SERVICE	MANUFACTURER	NO. REQ'D.	SOURCE OF QUOTE
LIFT TABLE CONVEYOR		2	

CHAIN DRIVEN LIVE ROLLER CONVEYOR

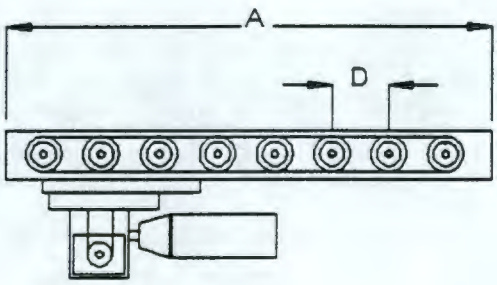

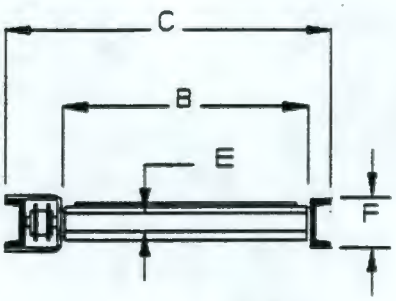

CONDITIONS OF SERVICE		DIMENSIONS	
APPLICATION: DRUM TRANSFER BETWEEN LIFT TABLE AND TRANSFER CAR		A: 84"	E: --
UNIT LOAD DESCRIPTION: 55 GALLON DRUMS CONTAINING LLRMW INSIDE OVERPACK		B: 36"	F: --
UNIT LOAD SIZE: 26" DIA X 39" HIGH	SPEED:	C:	G: --
UNIT LOAD WEIGHT: 3,000 LBS	DUTY: 8 HOURS/DAY	D:	H:
IMPACT LOADING: MODERATE	CONVEYOR PITCH/SLOPE:		
LOCATION: SIZE REDUCTION AND REPACK CELL	NEC AREA CLASS: UNCLASSIFIED		
CONSTRUCTION			
LIFT TABLE DRIVE:			
MOTOR RATING:			
WEIGHT:			
MATERIAL:			

UNITED ENGINEERS & CONSTRUCTORS A Raytheon Company Western Operations	EQUIPMENT DATA SHEET ☒ CDR ☐ TITLE I ☐ TITLE II ☐ TITLE III	ITEM NUMBER LT-05-640	PAGE 1 OF 2

CUSTOMER & LOCATION	PROJECT	UE&C JOB NO. 6237.006	DATE: 05/21/92
DOE-RL/WHC HANFORD, WA	WRAP FACILITY MODULE 2A	ACCOUNT NO.	BY: VAW

REVISIONS (DATE & BY)	A		B		C		D	
	E		F		G		H	

SERVICE	MANUFACTURER	NO. REQ'D.	SOURCE OF QUOTE
LIFT TABLE		1	

LIFT TABLE

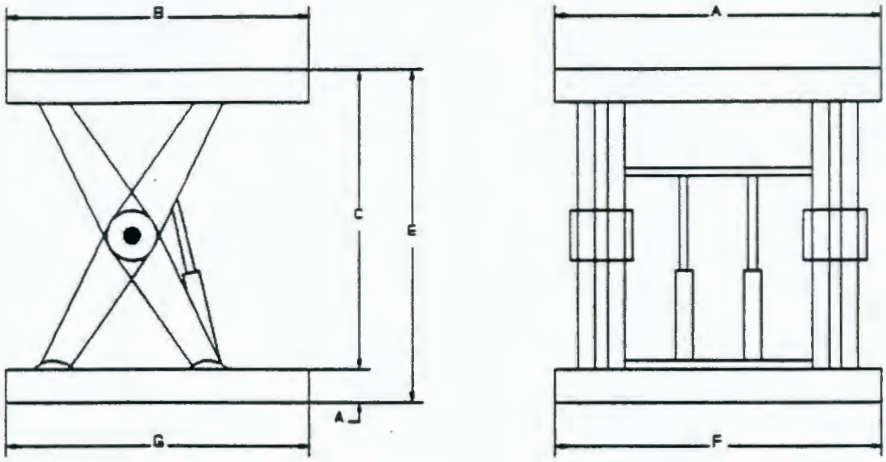

CONDITIONS OF SERVICE		DIMENSIONS	
APPLICATION: LIFT TABLE CONTAINING LLRMW FROM W112 FOR LOT VERIFICATION SAMPLING		A: 36"	F:
UNIT LOAD DESCRIPTION: 55 GALLON DRUMS CONTAINING LLRMW		B: 84"	G:
UNIT LOAD SIZE: 26" DIA X 39" HIGH	RAISING TIME: 26 SECONDS	C:	H:
UNIT LOAD WEIGHT: 3,000 LBS	DUTY: 8 HOURS/DAY	D:	I:
IMPACT LOADING: MODERATE	REPEATABILITY: +/- 0.125"	E:	J:
RAISED HEIGHT: 48.5"	NEC AREA CLASS: UNCLASSIFIED		
LOWERED HEIGHT: 6.5"			
LOCATION: SAMPLE MANAGEMENT AREA			
CONSTRUCTION			
LIFT TABLE DRIVE: HYDRAULIC			
MOTOR RATING: 1.5 HP			
WEIGHT: 860 LBS			
MATERIAL: CARBON STEEL			

9040.0227.PM6

UNITED ENGINEERS & CONSTRUCTORS A Raytheon Company Western Operations	EQUIPMENT DATA SHEET ☒ CDR ☐ TITLE I ☐ TITLE II ☐ TITLE III	ITEM NUMBER LT-05-640	PAGE 2 OF 2
CUSTOMER & LOCATION DOE-RL/WHC HANFORD, WA	PROJECT WRAP FACILITY MODULE 2A	UE&C JOB NO. 6237.006 / ACCOUNT NO.	DATE: 05/21/92 / BY: VAW

REVISIONS (DATE & BY)	A		B		C		D	
	E		F		G		H	

SERVICE	MANUFACTURER	NO. REQ'D.	SOURCE OF QUOTE
LIFT TABLE CONVEYOR		2	

CHAIN DRIVEN LIVE ROLLER CONVEYOR

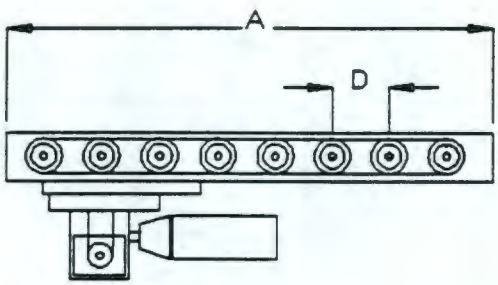

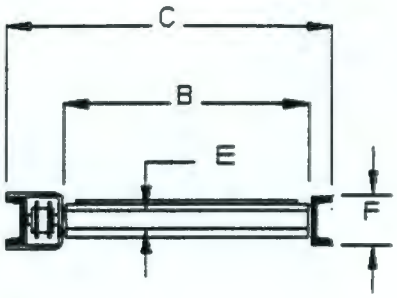

CONDITIONS OF SERVICE		DIMENSIONS	
APPLICATION: DRUM TRANSFER BETWEEN LIFT TABLE AND ROLLER CONVEYOR		A: 84"	E:
UNIT LOAD DESCRIPTION: 55 GALLON DRUMS CONTAINING LLRMW		B: 36"	F:
UNIT LOAD SIZE: 26" DIA X 39" HIGH	SPEED:	C:	G:
UNIT LOAD WEIGHT: 3,000 LBS	DUTY: 8 HOURS/DAY	D:	H:
IMPACT LOADING: MODERATE	CONVEYOR PITCH/SLOPE:		
LOCATION: SAMPLE MANAGEMENT AREA	NEC AREA CLASS: UNCLASSIFIED		
CONSTRUCTION			
LIFT TABLE DRIVE:			
MOTOR RATING: .33			
WEIGHT:			
MATERIAL:			

UNITED ENGINEERS & CONSTRUCTORS A Raytheon Company Western Operations	EQUIPMENT DATA SHEET ☒ CDR ☐ TITLE I ☐ TITLE II ☐ TITLE III	ITEM NUMBER LT-05-641	PAGE 1 OF 2

CUSTOMER & LOCATION	PROJECT	UE&C JOB NO. 6237.006	DATE: 05/21/92
DOE-RL/WHC HANFORD, WA	WRAP FACILITY MODULE 2A	ACCOUNT NO.	BY: VAW

REVISIONS (DATE & BY)	A		B		C		D	
	E		F		G		H	

SERVICE	MANUFACTURER	NO. REQ'D.	SOURCE OF QUOTE
LIFT TABLE		1	

LIFT TABLE

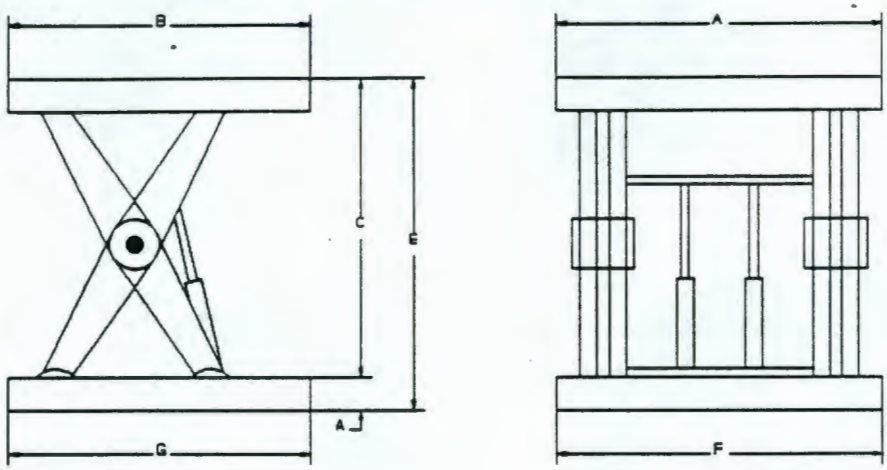

CONDITIONS OF SERVICE		DIMENSIONS	
APPLICATION: LIFT TABLE CONTAINING LLRMW FROM W112 FOR LOT VERIFICATION SAMPLING		A: 36"	F:
UNIT LOAD DESCRIPTION: 55 GALLON DRUMS CONTAINING LLRMW INSIDE OVERPACK		B: 84"	G:
UNIT LOAD SIZE: 26" DIA X 39" HIGH	RAISING TIME: 26 SECONDS	C:	H:
UNIT LOAD WEIGHT: 3,000 LBS	DUTY: 8 HOURS/DAY	D:	I:
IMPACT LOADING: MODERATE	REPEATABILITY: +/- 0.125"	E:	J:
RAISED HEIGHT: 48.5"	NEC AREA CLASS: UNCLASSIFIED		
LOWERED HEIGHT: 6.5"			
LOCATION: SAMPLE MANAGEMENT AREA			
CONSTRUCTION			
LIFT TABLE DRIVE: HYDRAULIC			
MOTOR RATING: 1.5 HP			
WEIGHT: 860 LBS			
MATERIAL: CARBON STEEL			

9413227.0408

UNITED ENGINEERS & CONSTRUCTORS A Raytheon Company Westinghouse	EQUIPMENT DATA SHEET ☒ CDR ☐ TITLE I ☐ TITLE II ☐ TITLE III	ITEM NUMBER LT-05-641	PAGE 2 OF 2
CUSTOMER & LOCATION DOE-RL/WHC HANFORD, WA	PROJECT WRAP FACILITY MODULE 2A	UE&C JOB NO. 6237.006 / ACCOUNT NO.	DATE: 05/21/92 / BY: VAW

REVISIONS (DATE & BY)	A		B		C		D	
	E		F		G		H	

SERVICE	MANUFACTURER	NO. REQ'D.	SOURCE OF QUOTE
LIFT TABLE CONVEYOR		2	

CHAIN DRIVEN LIVE ROLLER CONVEYOR

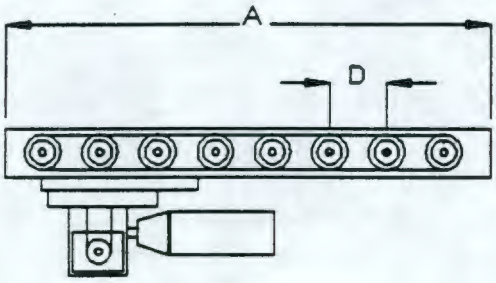

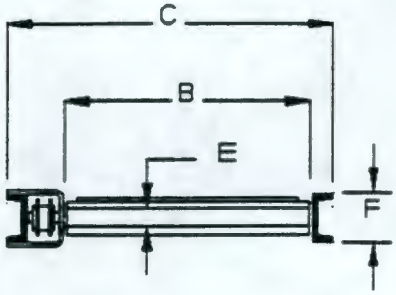

CONDITIONS OF SERVICE		DIMENSIONS	
APPLICATION: DRUM TRANSFER BETWEEN LIFT TABLE AND ROLLER CONVEYOR		A: 84"	E:
UNIT LOAD DESCRIPTION: 55 GALLON DRUMS CONTAINING LLRMW INSIDE OVERPACK		B: 36"	F:
UNIT LOAD SIZE: 26" DIA X 39" HIGH	SPEED:	C:	G:
UNIT LOAD WEIGHT: 3,000 LBS	DUTY: 8 HOURS/DAY	D:	H:
IMPACT LOADING: MODERATE	CONVEYOR PITCH/SLOPE:		
LOCATION: SAMPLE MANAGEMENT AREA	NEC AREA CLASS: UNCLASSIFIED		
CONSTRUCTION			
LIFT TABLE DRIVE:			
MOTOR RATING: .33			
WEIGHT:			
MATERIAL:			

UNITED ENGINEERS & CONSTRUCTORS A Raytheon Company Western Operations	EQUIPMENT DATA SHEET ☒ CDR ☐ TITLE I ☐ TITLE II ☐ TITLE III	ITEM NUMBER LT-06-101	PAGE 1 OF 2

CUSTOMER & LOCATION	PROJECT	UE&C JOB NO. 6237.006	DATE: 04/24/92
DOE-RL/WHC HANFORD, WA	WRAP FACILITY MODULE 2A	ACCOUNT NO.	BY: RLH

REVISIONS (DATE & BY)	A		B		C		D	
	E		F		G		H	

SERVICE	MANUFACTURER	NO. REQ'D.	SOURCE OF QUOTE
LIFT TABLE-DRUM ENTRY		1	

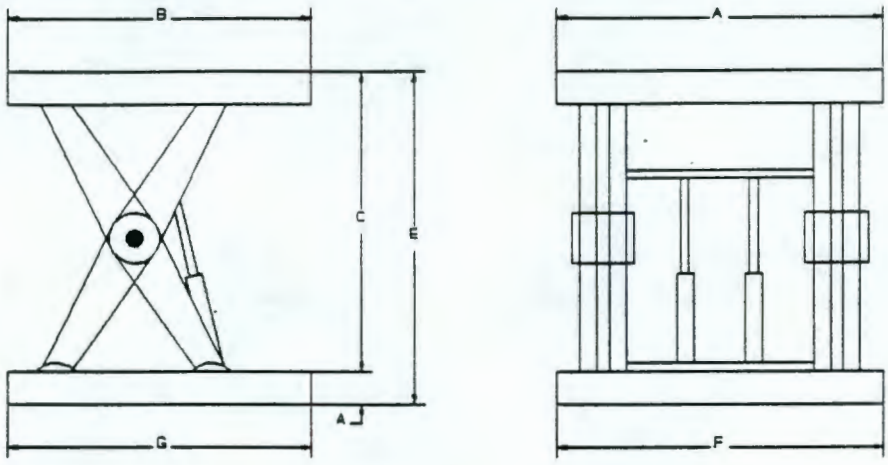

CONDITIONS OF SERVICE		DIMENSIONS	
APPLICATION: DRUM TRANSFER TO SHREDDER ENCLOSURE		A: 36"	F:
UNIT LOAD DESCRIPTION: 55 GALLON WASTE DRUMS		B: 84"	G:
UNIT LOAD SIZE: 26" DIA X 39" HIGH	RAISING TIME: 26 SECONDS	C:	H:
UNIT LOAD WEIGHT: 3,000 LBS MAX	DUTY: 8 HOURS/DAY	D:	I:
RAISED HEIGHT: 48.5"		E:	J:
LOWERED HEIGHT: 6.5"			
CONSTRUCTION			
LIFT TABLE DRIVE: HYDRAULIC			
MOTOR RATING: 1.5 HP			
WEIGHT: 860 LBS			

9413227.0410

UNITED ENGINEERS & CONSTRUCTORS A Raytheon Company Western Operations	EQUIPMENT DATA SHEET ☒ CDR ☐ TITLE I ☐ TITLE II ☐ TITLE III	ITEM NUMBER LT-06-101	PAGE 2 OF 2
CUSTOMER & LOCATION DOE-RL/WHC HANFORD, WA	PROJECT WRAP FACILITY MODULE 2A	UE&C JOB NO. 6237.006 / ACCOUNT NO.	DATE: 04/24/92 / BY: RLH

REVISIONS (DATE & BY)	A		B		C		D	
	E		F		G		H	

SERVICE	MANUFACTURER	NO. REQ'D.	SOURCE OF QUOTE
LIFT TABLE CONVEYOR		1	

CHAIN DRIVEN LIVE ROLLER CONVEYOR

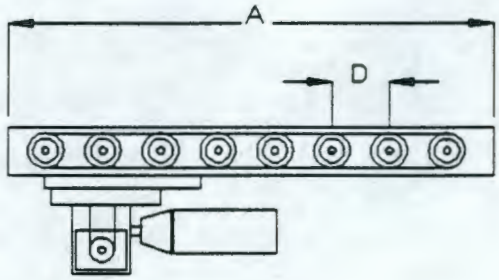

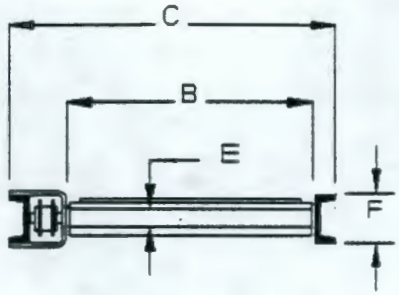

CONDITIONS OF SERVICE		DIMENSIONS	
APPLICATION: LIFT TABLE MOUNTED CONVEYOR		A: 84"	E: -
UNIT LOAD DESCRIPTION: 85 GALLON DRUMS CONTAINING SPECIAL WASTE		B:	F: -
UNIT LOAD SIZE: 26" DIA X 39" HIGH	SPEED:	C: 36"	G:
UNIT LOAD WEIGHT: 3,000 LBS	DUTY: 8 HOURS/DAY	D:	H:
IMPACT LOADING: MODERATE	CONVEYOR PITCH/SLOPE:		
LOCATION: INLET TO MERCURY/LEAD ENCL	NEC AREA CLASS: UNCLASSIFIED		
CONSTRUCTION			
FRAME MATL (ASTM): A36	SHIPPING WT: 490 LBS		
MOTOR RATING: 1/3 HP			
DRIVE TYPE: ROLLER TO ROLLER			
CHAIN TYPE: NO 60 ROLLER CHAIN			

UNITED ENGINEERS & CONSTRUCTORS A Raytheon Company Western Operations	EQUIPMENT DATA SHEET ☒ CDR ☐ TITLE I ☐ TITLE II ☐ TITLE III	ITEM NUMBER LT-06-102	PAGE 1 OF 2

CUSTOMER & LOCATION	PROJECT	UE&C JOB NO. 6237.006	DATE: 04/24/92
DOE-RL/WHC HANFORD, WA	WRAP FACILITY MODULE 2A	ACCOUNT NO.	BY: RLH

REVISIONS (DATE & BY)	A		B		C		D	
	E		F		G		H	

SERVICE	MANUFACTURER	NO. REQ'D.	SOURCE OF QUOTE
LIFT TABLE-DRUM EXIT		1	

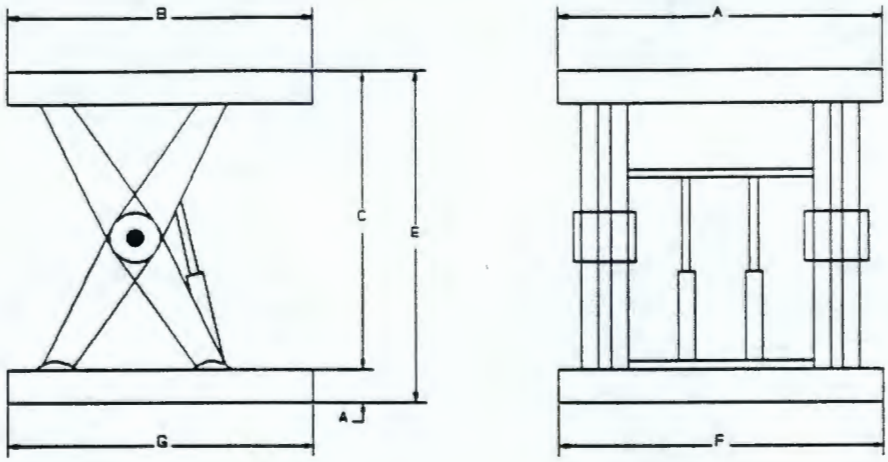

CONDITIONS OF SERVICE		DIMENSIONS	
APPLICATION: DRUM TRANSFER FROM SHREDDER ENCLOSURE TO AGV		A: 36"	F:
UNIT LOAD DESCRIPTION: 55 GALLON WASTE DRUMS		B: 84"	G:
UNIT LOAD SIZE: 26" DIA X 39" HIGH	RAISING TIME: 26 SECONDS	C:	H:
UNIT LOAD WEIGHT: 1,500 LBS	DUTY: 8 HOURS/DAY	D:	I:
RAISED HEIGHT: 48.5"		E:	J:
LOWERED HEIGHT: 6.5"			
CONSTRUCTION			
LIFT TABLE DRIVE: HYDRAULIC			
MOTOR RATING: 1.5 HP			
WEIGHT: 860 LBS			

9413227.0412

UNITED ENGINEERS & CONSTRUCTORS A Raytheon Company Western Operations	EQUIPMENT DATA SHEET ☒ CDR ☐ TITLE I ☐ TITLE II ☐ TITLE III	ITEM NUMBER LT-06-102	PAGE 2 OF 2

CUSTOMER & LOCATION	PROJECT	UE&C JOB NO. 6237.006	DATE: 04/24/92
DOE-RL/WHC HANFORD, WA	WRAP FACILITY MODULE 2A	ACCOUNT NO.	BY: RLH

REVISIONS (DATE & BY)	A		B		C		D	
	E		F		G		H	

SERVICE	MANUFACTURER	NO. REQ'D.	SOURCE OF QUOTE
LIFT TABLE CONVEYOR		1	

CHAIN DRIVEN LIVE ROLLER CONVEYOR

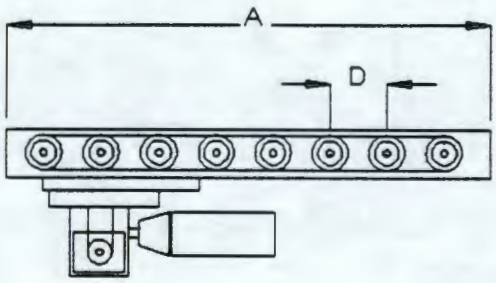

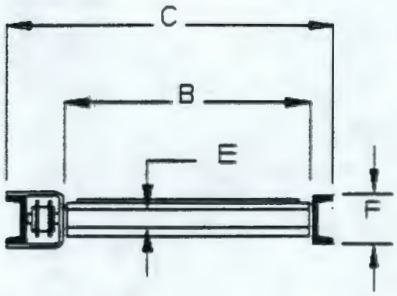

CONDITIONS OF SERVICE		DIMENSIONS	
APPLICATION: LIFT TABLE MOUNTED CONVEYOR		A: 84"	E:
UNIT LOAD DESCRIPTION: 55 GALLON DRUMS CONTAINING SPECIAL WASTE		B:	F:
UNIT LOAD SIZE: 22.5" DIA X 34.5" HIGH	SPEED:	C: 36"	G:
UNIT LOAD WEIGHT: 1,000 LBS	DUTY: 8 HOURS/DAY	D:	H:
IMPACT LOADING: MODERATE	CONVEYOR PITCH/SLOPE:		
LOCATION: DRUM FILL - LEAD	NEC AREA CLASS: UNCLASSIFIED		
CONSTRUCTION			
FRAME MATL (ASTM): A36	SHIPPING WT: 490 LBS		
MOTOR RATING: 1/3 HP	WEIGHING: SHEAR PIN LOAD CELLS		
DRIVE TYPE: ROLLER TO ROLLER			
CHAIN TYPE: NO 60 ROLLER CHAIN			

UNITED ENGINEERS & CONSTRUCTORS A Raytheon Company Western Operations	EQUIPMENT DATA SHEET ☒ CDR ☐ TITLE I ☐ TITLE II ☐ TITLE III	ITEM NUMBER LT-06-201	PAGE 1 OF 2

CUSTOMER & LOCATION	PROJECT	UE&C JOB NO. 6237.006	DATE: 04/24/92
DOE-RL/WHC HANFORD, WA	WRAP FACILITY MODULE 2A	ACCOUNT NO.	BY: RLH

REVISIONS (DATE & BY)	A		B		C		D	
	E		F		G		H	

SERVICE	MANUFACTURER	NO. REQ'D.	SOURCE OF QUOTE
LIFT TABLE-DRUM EXIT		1	

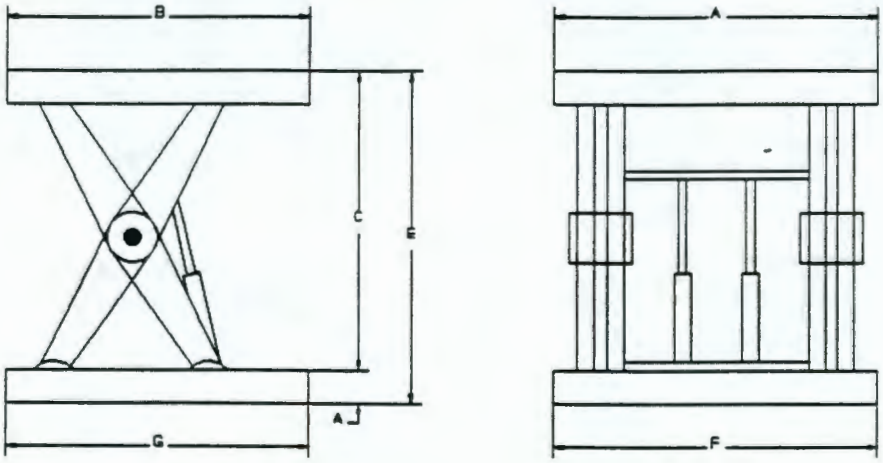

CONDITIONS OF SERVICE		DIMENSIONS	
APPLICATION: DRUM TRANSFER FROM EVAPORATOR ENCLOSURE TO AGV		A: 36"	F:
UNIT LOAD DESCRIPTION: 55 GALLON WASTE DRUMS		B: 84"	G:
UNIT LOAD SIZE: 26" DIA X 39" HIGH	RAISING TIME: 26 SECONDS	C:	H:
UNIT LOAD WEIGHT: 1,500 LBS	DUTY: 8 HOURS/DAY	D:	I:
RAISED HEIGHT: 48.5"		E:	J:
LOWERED HEIGHT: 6.5"			
CONSTRUCTION			
LIFT TABLE DRIVE: HYDRAULIC			
MOTOR RATING: 1.5 HP			
WEIGHT: 860 LBS			

9413227.0414

UNITED ENGINEERS & CONSTRUCTORS A Raytheon Company Western Operations	EQUIPMENT DATA SHEET ☒ CDR ☐ TITLE I ☐ TITLE II ☐ TITLE III	ITEM NUMBER LT-06-201	PAGE 2 OF 2
CUSTOMER & LOCATION DOE-RL/WHC HANFORD, WA	PROJECT WRAP FACILITY MODULE 2A	UE&C JOB NO. 6237.006 / ACCOUNT NO.	DATE: 04/24/92 / BY: RLH

REVISIONS (DATE & BY)	A		B		C		D	
	E		F		G		H	

SERVICE	MANUFACTURER	NO. REQ'D.	SOURCE OF QUOTE
LIFT TABLE CONVEYOR		1	

CHAIN DRIVEN LIVE ROLLER CONVEYOR

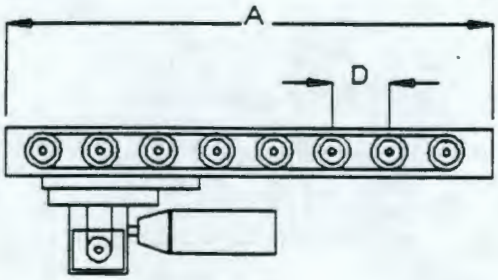

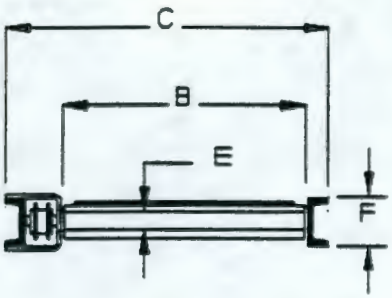

CONDITIONS OF SERVICE		DIMENSIONS	
APPLICATION: LIFT TABLE MOUNTED CONVEYOR		A: 84"	E:
UNIT LOAD DESCRIPTION: 55 GALLON DRUMS		B:	F:
UNIT LOAD SIZE: 22.5" DIA X 34.5" HIGH	SPEED:	C: 36"	G:
UNIT LOAD WEIGHT: 1,500 LBS	DUTY: 8 HOURS/DAY	D:	H:
IMPACT LOADING: MODERATE	CONVEYOR PITCH/SLOPE:		
LOCATION: DRUM FILL - MERCURY	NEC AREA CLASS: UNCLASSIFIED		
CONSTRUCTION			
FRAME MATL (ASTM): A36	SHIPPING WT: 490 LBS		
MOTOR RATING: 1/3 HP	WEIGHING: SHEAR PIN LOAD CELLS		
DRIVE TYPE: ROLLER TO ROLLER			
CHAIN TYPE: NO 60 ROLLER CHAIN			

9413227.0415

UNITED ENGINEERS & CONSTRUCTORS A Raytheon Company Western Operations	EQUIPMENT DATA SHEET ☒ CDR ☐ TITLE I ☐ TITLE II ☐ TITLE III	ITEM NUMBER LT-05-401	PAGE 1 OF 2

CUSTOMER & LOCATION	PROJECT	UE&C JOB NO. 6237.006	DATE: 05/21/92
DOE-RL/WHC HANFORD, WA	WRAP FACILITY MODULE 2A	ACCOUNT NO.	BY: AJZ

REVISIONS (DATE & BY)	A		B		C		D	
	E		F		G		H	

SERVICE	MANUFACTURER	NO. REQ'D.	SOURCE OF QUOTE
LIFT TABLE		1	

LIFT TABLE

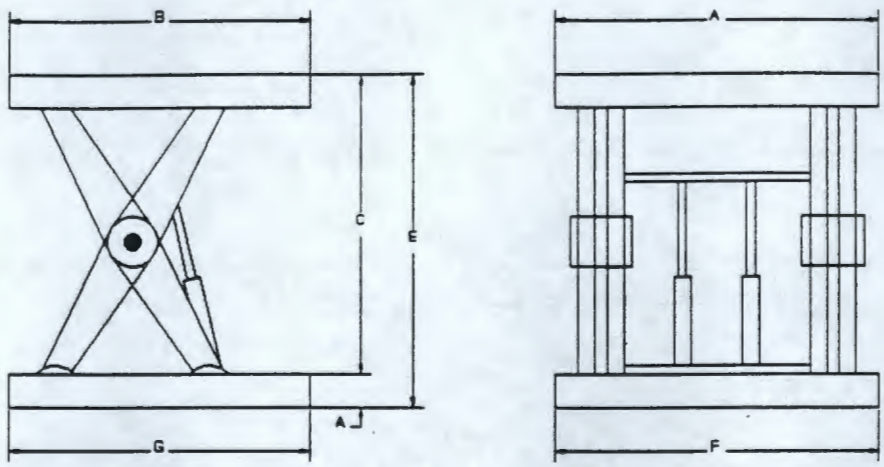

CONDITIONS OF SERVICE		DIMENSIONS	
APPLICATION: LIFT DRUMS CONTAINING LLRMW TO THE POLYMER ENCLOSURE		A: 36"	F:
UNIT LOAD DESCRIPTION: 55 & 85 GAL DRUMS CONTAINING LLRMW		B: 84"	G:
UNIT LOAD SIZE: 26" DIA X 39" HIGH	RAISING TIME: 26 SECONDS	C:	H:
UNIT LOAD WEIGHT: 3,000 LBS	DUTY: 8 HOURS/DAY	D:	I:
IMPACT LOADING: MODERATE	REPEATABILITY: +/- 0.125"	E:	J:
RAISED HEIGHT: 48.5"	NEC AREA CLASS: UNCLASSIFIED		
LOWERED HEIGHT: 6.5"			
LOCATION: SIZE REDUCTION AND REPACK CELL			
CONSTRUCTION			
LIFT TABLE DRIVE: HYDRAULIC			
MOTOR RATING: 1.5 HP			
WEIGHT: 860 LBS			
MATERIAL: CARBON STEEL			

9140.2227.HG

UNITED ENGINEERS & CONSTRUCTORS A Raytheon Company Western Operations	EQUIPMENT DATA SHEET ☒ CDR ☐ TITLE I ☐ TITLE II ☐ TITLE III	ITEM NUMBER LT-05-401	PAGE 2 OF 2
CUSTOMER & LOCATION DOE-RL/WHC HANFORD, WA	PROJECT WRAP FACILITY MODULE 2A	UE&C JOB NO. 6237.006	DATE: 05/21/92
		ACCOUNT NO.	BY: AJZ

REVISIONS (DATE & BY)	A		B		C		D	
	E		F		G		H	

SERVICE	MANUFACTURER	NO. REQ'D.	SOURCE OF QUOTE
LIFT TABLE CONVEYOR		1	

CHAIN DRIVEN LIVE ROLLER CONVEYOR

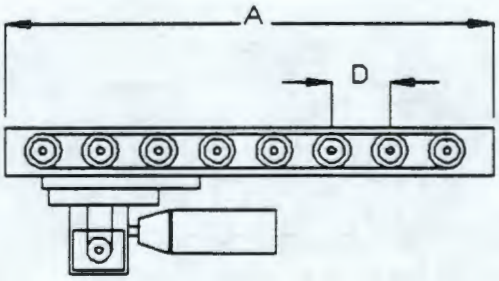

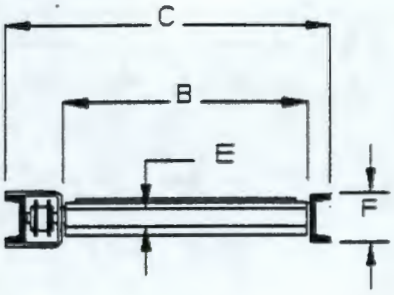

CONDITIONS OF SERVICE		DIMENSIONS	
APPLICATION: DRUM TRANSFER BETWEEN AGV AND LIFT TABLE		A: 84"	E:
UNIT LOAD DESCRIPTION: 55 AND 85 GAL DRUMS CONTAING LLRMW		B: 36"	F:
UNIT LOAD SIZE: 26" DIA X 39" HIGH	SPEED:	C:	G:
UNIT LOAD WEIGHT: 3,000 LBS	DUTY: 8 HOURS/DAY	D:	H:
IMPACT LOADING: MODERATE	CONVEYOR PITCH/SLOPE:		
LOCATION: SIZE REDUCTION AND REPACK CELL	NEC AREA CLASS: UNCLASSIFIED		
CONSTRUCTION			
LIFT TABLE DRIVE:			
MOTOR RATING:			
WEIGHT:			
MATERIAL:			

UNITED ENGINEERS & CONSTRUCTORS A Raytheon Company Western Operations	EQUIPMENT DATA SHEET ☒ CDR ☐ TITLE I ☐ TITLE II ☐ TITLE III	ITEM NUMBER LT-05-402	PAGE 1 OF 2

CUSTOMER & LOCATION	PROJECT	UE&C JOB NO. 6237.006	DATE: 05/21/92
DOE-RL/WHC HANFORD, WA	WRAP FACILITY MODULE 2A	ACCOUNT NO.	BY: AJZ

REVISIONS (DATE & BY)	A		B		C		D	
	E		F		G		H	

SERVICE	MANUFACTURER	NO. REQ'D.	SOURCE OF QUOTE
LIFT TABLE		1	

LIFT TABLE

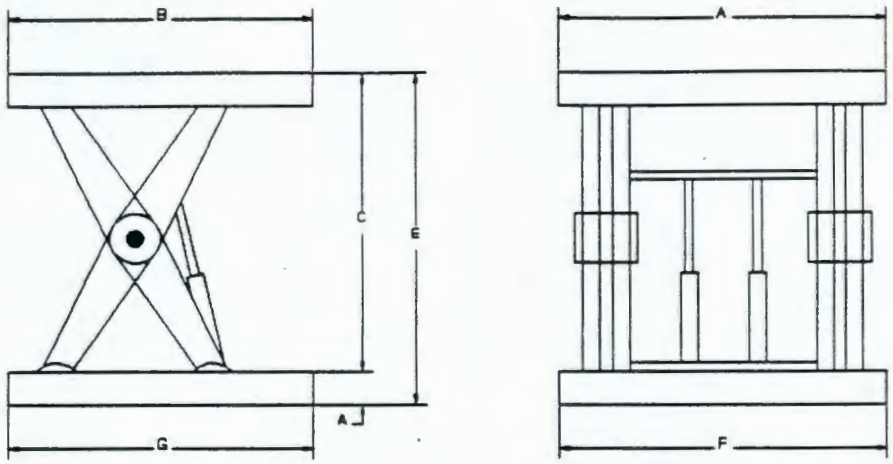

CONDITIONS OF SERVICE		DIMENSIONS	
APPLICATION: LIFT DRUMS CONTAINING LLRMW TO THE POLYMER ENCLOSURE		A: 36"	F:
UNIT LOAD DESCRIPTION: 55 & 85 GAL DRUMS CONTAINING LLRMW		B: 84"	G:
UNIT LOAD SIZE: 26" DIA X 39" HIGH	RAISING TIME: 26 SECONDS	C:	H:
UNIT LOAD WEIGHT: 3,000 LBS	DUTY: 8 HOURS/DAY	D:	I:
IMPACT LOADING: MODERATE	REPEATABILITY: +/- 0.125"	E:	J:
RAISED HEIGHT: 48.5"	NEC AREA CLASS: UNCLASSIFIED		
LOWERED HEIGHT: 6.5"			
LOCATION: SIZE REDUCTION AND REPACK CELL			
CONSTRUCTION			
LIFT TABLE DRIVE: HYDRAULIC			
MOTOR RATING: 1.5 HP			
WEIGHT: 860 LBS			
MATERIAL: CARBON STEEL			

9413227.0418

UNITED ENGINEERS & CONSTRUCTORS A Raytheon Company Western Operations	EQUIPMENT DATA SHEET ☒ CDR ☐ TITLE I ☐ TITLE II ☐ TITLE III	ITEM NUMBER LT-05-402	PAGE 2 OF 2

CUSTOMER & LOCATION	PROJECT	UE&C JOB NO. 6237.006	DATE: 05/21/92
DOE-RL/WHC HANFORD, WA	WRAP FACILITY MODULE 2A	ACCOUNT NO.	BY: AJZ

REVISIONS (DATE & BY)	A		B		C		D	
	E		F		G		H	

SERVICE	MANUFACTURER	NO. REQ'D.	SOURCE OF QUOTE
LIFT TABLE CONVEYOR		1	

CHAIN DRIVEN LIVE ROLLER CONVEYOR

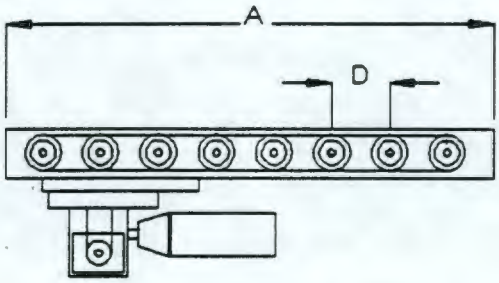

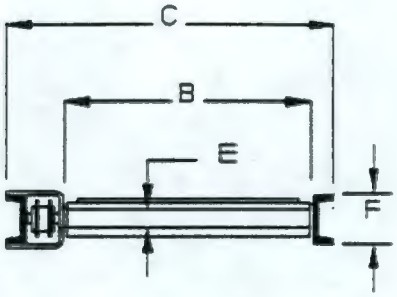

CONDITIONS OF SERVICE		DIMENSIONS	
APPLICATION: DRUM TRANSFER BETWEEN AGV AND LIFT TABLE		A: 84"	E:
UNIT LOAD DESCRIPTION: 55 AND 85 GAL DRUMS CONTAING LLRMW		B: 36"	F:
UNIT LOAD SIZE: 26" DIA X 39" HIGH	SPEED:	C:	G:
UNIT LOAD WEIGHT: 3,000 LBS	DUTY: 8 HOURS/DAY	D:	H:
IMPACT LOADING: MODERATE	CONVEYOR PITCH/SLOPE:		
LOCATION: SIZE REDUCTION AND REPACK CELL	NEC AREA CLASS: UNCLASSIFIED		
CONSTRUCTION			
LIFT TABLE DRIVE:			
MOTOR RATING:			
WEIGHT:			
MATERIAL:			

UNITED ENGINEERS & CONSTRUCTORS A Raytheon Company Western Operations	EQUIPMENT DATA SHEET ☒ CDR ☐ TITLE I ☐ TITLE II ☐ TITLE III	ITEM NUMBER LT-05-403	PAGE 1 OF 2

CUSTOMER & LOCATION	PROJECT	UE&C JOB NO. 6237.006	DATE: 05/21/92
DOE-RL/WHC HANFORD, WA	WRAP FACILITY MODULE 2A	ACCOUNT NO.	BY: AJZ

REVISIONS (DATE & BY)	A		B		C		D	
	E		F		G		H	

SERVICE	MANUFACTURER	NO. REQ'D.	SOURCE OF QUOTE
LIFT TABLE		1	

LIFT TABLE

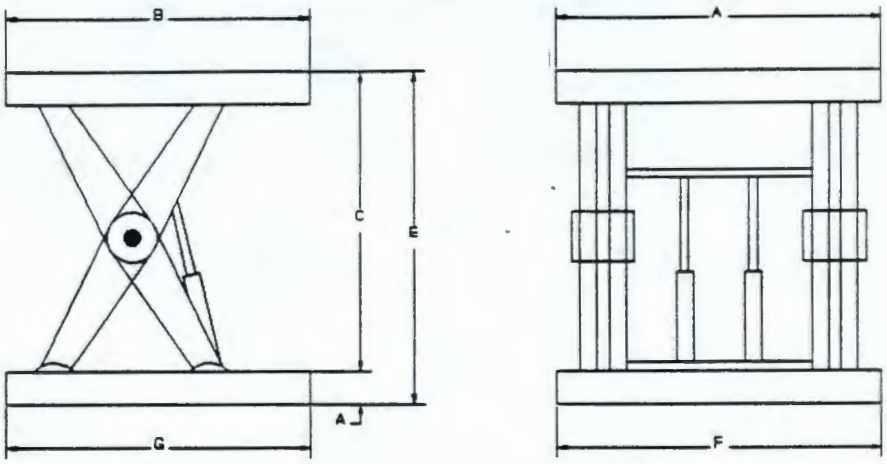

CONDITIONS OF SERVICE		DIMENSIONS	
APPLICATION: LIFT DRUMS CONTAINING LLRMW TO THE POLYMER ENCLOSURE		A: 36"	F:
UNIT LOAD DESCRIPTION: 55 & 85 GAL DRUMS CONTAINING LLRMW		B: 84"	G:
UNIT LOAD SIZE: 26" DIA X 39" HIGH	RAISING TIME: 26 SECONDS	C:	H:
UNIT LOAD WEIGHT: 3,000 LBS	DUTY: 8 HOURS/DAY	D:	I:
IMPACT LOADING: MODERATE	REPEATABILITY: +/- 0.125"	E:	J:
RAISED HEIGHT: 48.5"	NEC AREA CLASS: UNCLASSIFIED		
LOWERED HEIGHT: 6.5"			
LOCATION: SIZE REDUCTION AND REPACK CELL			
CONSTRUCTION			
LIFT TABLE DRIVE: HYDRAULIC			
MOTOR RATING: 1.5 HP			
WEIGHT: 860 LBS			
MATERIAL: CARBON STEEL			

9413227.0420

UNITED ENGINEERS & CONSTRUCTORS A Raytheon Company Western Operations	EQUIPMENT DATA SHEET ☒ CDR ☐ TITLE I ☐ TITLE II ☐ TITLE III	ITEM NUMBER LT-05-403	PAGE 2 OF 2

CUSTOMER & LOCATION	PROJECT	UE&C JOB NO. 6237.006	DATE: 05/21/92
DOE-RL/WHC HANFORD, WA	WRAP FACILITY MODULE 2A	ACCOUNT NO.	BY: AJZ

REVISIONS (DATE & BY)	A		B		C		D	
	E		F		G		H	

SERVICE	MANUFACTURER	NO. REQ'D.	SOURCE OF QUOTE
LIFT TABLE CONVEYOR		1	

CHAIN DRIVEN LIVE ROLLER CONVEYOR

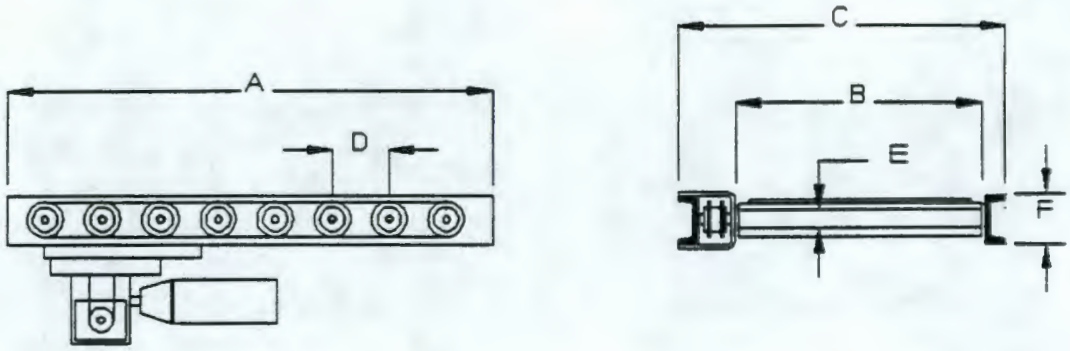

CONDITIONS OF SERVICE		DIMENSIONS	
APPLICATION: DRUM TRANSFER BETWEEN AGV AND LIFT TABLE		A: 84"	E:
UNIT LOAD DESCRIPTION: 55 AND 85 GAL DRUMS CONTAING LLRMW		B: 36"	F:
UNIT LOAD SIZE: 26" DIA X 39" HIGH	SPEED:	C:	G:
UNIT LOAD WEIGHT: 3,000 LBS	DUTY: 8 HOURS/DAY	D:	H:
IMPACT LOADING: MODERATE	CONVEYOR PITCH/SLOPE:		
LOCATION: SIZE REDUCTION AND REPACK CELL	NEC AREA CLASS: UNCLASSIFIED		
CONSTRUCTION			
LIFT TABLE DRIVE:			
MOTOR RATING:			
WEIGHT:			
MATERIAL:			

UNITED ENGINEERS & CONSTRUCTORS A Raytheon Company Western Operations	EQUIPMENT DATA SHEET ☒ CDR ☐ TITLE I ☐ TITLE II ☐ TITLE III	ITEM NUMBER LT-05-404	PAGE 1 OF 2

CUSTOMER & LOCATION	PROJECT	UE&C JOB NO. 6237.006	DATE: 05/21/92
DOE-RL/WHC HANFORD, WA	WRAP FACILITY MODULE 2A	ACCOUNT NO.	BY: AJZ

REVISIONS (DATE & BY)	A		B		C		D	
	E		F		G		H	

SERVICE	MANUFACTURER	NO. REQ'D.	SOURCE OF QUOTE
LIFT TABLE		1	

LIFT TABLE

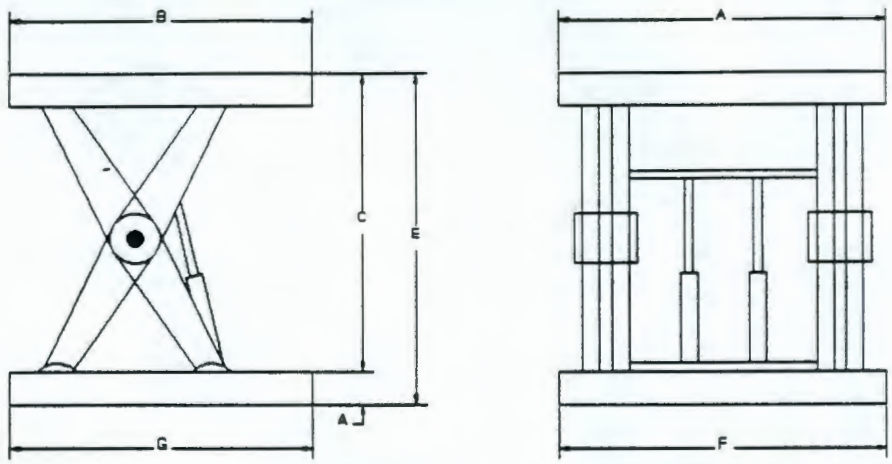

CONDITIONS OF SERVICE		DIMENSIONS	
APPLICATION: LIFT DRUMS CONTAINING LLRMW TO THE POLYMER ENCLOSURE		A: 36"	F:
UNIT LOAD DESCRIPTION: 55 & 85 GAL DRUMS CONTAINING LLRMW		B: 84"	G:
UNIT LOAD SIZE: 26" DIA X 39" HIGH	RAISING TIME: 26 SECONDS	C:	H:
UNIT LOAD WEIGHT: 3,000 LBS	DUTY: 8 HOURS/DAY	D:	I:
IMPACT LOADING: MODERATE	REPEATABILITY: +/- 0.125"	E:	J:
RAISED HEIGHT: 48.5"	NEC AREA CLASS: UNCLASSIFIED		
LOWERED HEIGHT: 6.5"			
LOCATION: SIZE REDUCTION AND REPACK CELL			
CONSTRUCTION			
LIFT TABLE DRIVE: HYDRAULIC			
MOTOR RATING: 1.5 HP			
WEIGHT: 860 LBS			
MATERIAL: CARBON STEEL			

9413227.0422

UNITED ENGINEERS & CONSTRUCTORS A Raytheon Company Western Operations	EQUIPMENT DATA SHEET ☒ CDR ☐ TITLE I ☐ TITLE II ☐ TITLE III	ITEM NUMBER LT-05-404	PAGE 2 OF 2

CUSTOMER & LOCATION	PROJECT	UE&C JOB NO. 6237.006	DATE: 05/21/92
DOE-RL/WHC HANFORD, WA	WRAP FACILITY MODULE 2A	ACCOUNT NO.	BY: AJZ

REVISIONS (DATE & BY)	A		B		C		D	
	E		F		G		H	

SERVICE	MANUFACTURER	NO. REQ'D.	SOURCE OF QUOTE
LIFT TABLE CONVEYOR		1	

CHAIN DRIVEN LIVE ROLLER CONVEYOR

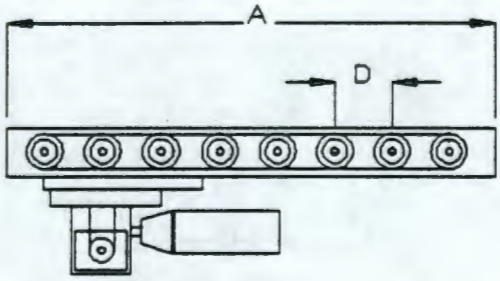

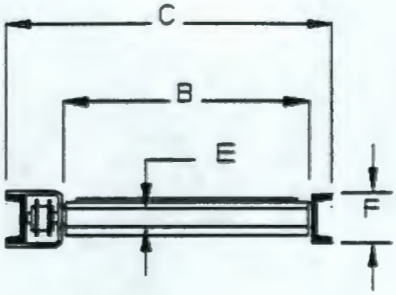

CONDITIONS OF SERVICE		DIMENSIONS	
APPLICATION: DRUM TRANSFER BETWEEN AGV AND LIFT TABLE		A: 84"	E:
UNIT LOAD DESCRIPTION: 55 AND 85 GAL DRUMS CONTAING LLRMW		B: 36"	F:
UNIT LOAD SIZE: 26" DIA X 39" HIGH	SPEED:	C:	G:
UNIT LOAD WEIGHT: 3,000 LBS	DUTY: 8 HOURS/DAY	D:	H:
IMPACT LOADING: MODERATE	CONVEYOR PITCH/SLOPE:		
LOCATION: SIZE REDUCTION AND REPACK CELL	NEC AREA CLASS: UNCLASSIFIED		
CONSTRUCTION			
LIFT TABLE DRIVE:			
MOTOR RATING:			
WEIGHT:			
MATERIAL:			

SECTION 14510

GHL3227.0424

THIS PAGE INTENTIONALLY
LEFT BLANK

THIS PAGE INTENTIONALLY
LEFT BLANK

WRAP MODULE 2A

SPECIFICATION SECTION
FOR
14510 AUTOMATIC GUIDED VEHICLE

PART 1 GENERAL

1.01 SECTION SCOPE
1.02 RELATED SECTIONS
1.03 REFERENCES
1.04 SYSTEM DESCRIPTION
1.05 SUBMITTALS
1.06 DELIVERY, STORAGE & HANDLING
1.07 SITE CONDITIONS

PART 2 PRODUCTS

2.01 MANUFACTURERS
2.02 MATERIALS
2.03 EQUIPMENT
2.04 COMPONENTS
2.05 FABRICATION
2.06 SHOP QUALITY CONTROL

PART 3 EXECUTION

3.01 PREPARATION
3.02 ERECTION, INSTALLATION & APPLICATION
3.03 FIELD QUALITY CONTROL
3.04 ADJUSTING AND CLEANING
3.05 DEMONSTRATION
3.06 PROTECTION

APPENDIX

APPENDIX A DATA SHEETS

WRAP MODULE 2A

SECTION 14510

AUTOMATIC GUIDED VEHICLE

PART 1 GENERAL

1.01 SECTION SCOPE

A. This specification establishes the requirements for automatic guided vehicle (AGV.), with dual powdered roller conveyor top, guide system, computer control system and other required safety items, for WRAP 2A.

1.02 RELATED SECTIONS

1.03 REFERENCES

A. American National Standards Institute (ANSI)

ANSI B56.1	Safety Standard for Powered Industrial Trucks, Low Lift and High Lift Trucks
ANSI 583	Safety Standard for Electric Battery Powered Industrial Trucks

B. Occupational Safety and Health Administration (OSHA)
OSHA 29 CR 1910.7B

C. National Electric Code (NEC)
NEC — All Applicable Sections.

D. National Fluid Power Association (NFPA)
NFPA — All Applicable Sections.

E. National Fire Protection Association (NFPA)
NFPA-70 — All Applicable Sections.

1.04 SYSTEM DESCRIPTION

A. An Automatic Guided Vehicle (AGV) is a free-ranging self-guided vehicle. The AGV would be equipped with a dual roller deck top. The AGV has wireless guidance system and is equipped with an on-board computer for navigation. The wireless guidance is accomplished by using either a laser beam to read barcoded targets mounted on walls or guidance methods that utilize an advance encoder, inertial guidance update marker system and innovative navigation firmware. The wireless system allows the operator to change the path

94/5227.0426

of the AGV by performing off-line reprogramming of the guide path. The on-board computers are linked with the main control computer using a FM radio signal. The AGV control computer is linked with the Plant Management System (PMS) so that the AGV can interface with the other internal transfer equipment.

B. Data Sheets

Equipment Tag Nos. WBS Area Location Numbers and equipment data sheets for this description are provided in **Appendix A.**

END OF SECTION

DW 2227 PG27

WRAP MODULE 2A

APPENDIX A

EQUIPMENT/INSTRUMENT DATA SHEETS

WBS LOCATION	EQUIPMENT TAG	SERVICE
1108	GV-08-101	Automatic Guided Vehicle
1108	GV-08-102	Automatic Guided Vehicle

9413227.0428

APRIL 1992

UE&C PROJECT NO. 6237.006

FILE NO. 14510 - A1

UNITED ENGINEERS & CONSTRUCTORS A Raytheon Company Western Operations	EQUIPMENT DATA SHEET ☒ CDR ☐ TITLE I ☐ TITLE II ☐ TITLE III	ITEM NUMBER GV-08-101	PAGE 1 OF 2
CUSTOMER & LOCATION DOE-RL/WHC HANFORD, WA	PROJECT WRAP FACILITY MODULE 2A	UE&C JOB NO. 6237.006	DATE: 04/15/92
		ACCOUNT NO.	BY: JDC

REVISIONS (DATE & BY)	A		B		C		D	
	E		F		G		H	

SERVICE	MANUFACTURER	NO. REQ'D.	SOURCE OF QUOTE
AUTOMATIC GUIDED VEHICLE		1	

AUTOMATIC GUIDED VEHICLE

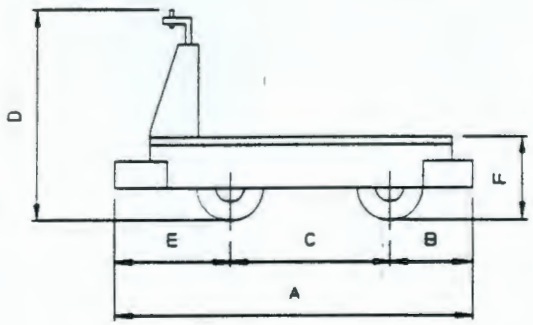

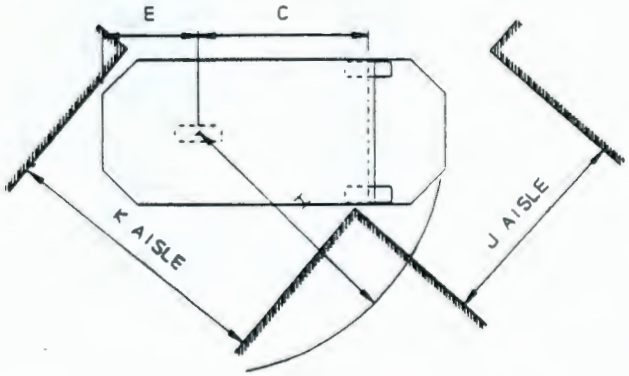

CONDITIONS OF SERVICE		DIMENSIONS	
APPLICATION: TRANSFER DRUMS FROM SIZE REDUCTION/NDA TO LAG STORAGE		A: 107"	K: 48"
UNIT LOAD DESCRIPTION: 55 GALLON DRUMS		B: 30.5"	L:
UNIT LOAD SIZE: 22.5" DIA X 34.5" HIGH	SPEED UNLOADED/LOADED: 2.2/2.2 MPH	C: 47.6"	M:
UNIT LOAD WEIGHT: 3,000 LBS	DUTY: 8 HOURS/DAY	D: 83.2"	N:
TOTAL DISTRIBUTED LOAD: 6,000 LBS	NEC AREA CLASS: UNCLASSIFIED	E: 28.9"	P:
		F: 26"	Q:
		G: 54"	R:
		H: 79.8"	S:
CONSTRUCTION		J: 120"	
AGV TYPE: ELECTRIC POWERED	ELECTRICAL REQ.: 3.4 KW/MOTOR		
AGV CLASS:	BATTERY CHARGER TYPE/CAP.:		
AGV CAPACITY: 6,000 LBS	BATTERY TYPE: 48V - 300 AMP HR		
TIRES FRONT/REAR: POLY/POLY	ELECTRIC DRIVE MOTOR: TRACTION		
GRADEABILITY: 5%	STEERING: POWERED		
GUIDANCE: LASER/DEAD RECKONING	BRAKES: ELECTRO MECHANICAL		
TURNING RADIUS: 74.8"	DIAGNOSTICS: REQUIRED		
MIN. AISLE WIDTH: 120"	INDICATING LIGHTS: TURN SIGNALS		
MIN. INTERSECTING AISLE WIDTH: 98"	SHIPPING WT: 4,100 LBS		
OBSTACLE DETECTION: REQUIRED			
TYPE OF CONTROL: AUTO/PENDANT			

9413227.0429

UNITED ENGINEERS & CONSTRUCTORS A Raytheon Company Western Operations	EQUIPMENT DATA SHEET ☒ CDR ☐ TITLE I ☐ TITLE II ☐ TITLE III	ITEM NUMBER GV-08-101	PAGE 2 OF 2
CUSTOMER & LOCATION DOE-RL/WHC HANFORD, WA	PROJECT WRAP FACILITY MODULE 2A	UE&C JOB NO. 6237.006	DATE: 04/15/92
		ACCOUNT NO.	BY: JDC

REVISIONS (DATE & BY)	A		B		C		D	
	E		F		G		H	

SERVICE	MANUFACTURER	NO. REQ'D.	SOURCE OF QUOTE
AUTOMATIC GUIDED VEHICLE		1	

CHAIN DRIVEN LIVE ROLLER CONVEYOR

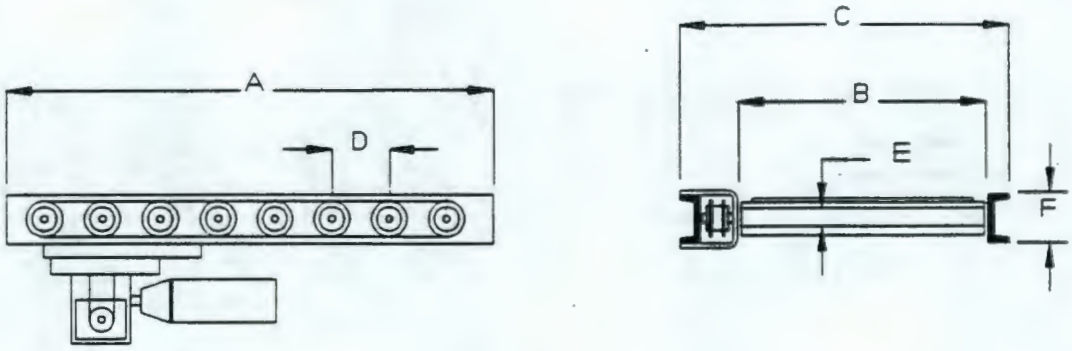

CONDITIONS OF SERVICE		DIMENSIONS	
APPLICATION: TRANSPORTATION OF DRUMS FROM PROCESS AREAS TO STORAGE		A: 36"	E: 2.5"
UNIT LOAD DESCRIPTION: 55 AND 83 GALLON DRUMS		B: 30"	F: 4"
UNIT LOAD SIZE: 26" DIA X 32" HIGH	SPEED: 30 FPM	C: 33"	G:
UNIT LOAD WEIGHT: 3,000 LBS	DUTY: 8 HOURS/DAY	D: 4.5"	H:
IMPACT LOADING: LIGHT	CONVEYOR PITCH/SLOPE: N/A		
	NEC AREA CLASS: UNCLASSIFIED		
CONSTRUCTION			
FRAME MATL. (ASTM): A36	ROLLER MATL. (ASTM): A36		
LENGTH: 36"	ROLLER CAPACITY (Ea.):		
WIDTH (Inside): 33"	DRIVE CAPACITY:		
ACCUMULATION ZONE LENGTH: N/A	ROLLER SPACING: 4.5"		
NO. OF ACCUMULATION ZONES: N/A	ROLLER O.D.: 2.5"		
LEG SPACING: N/A	ROLLER THICKNESS:		
MOTOR RATING: HP	ROLLER RETENTION:		
REDUCER TYPE:	BEARING TYPE:		
MOTOR/REDUCER CONN.:	NEMA RATING:		
DRIVE TYPE: ROLLER TO ROLLER	SHIPPING WT.:		
CHAIN TYPE: NO. 60 CHAIN			

9413227.0430

UNITED ENGINEERS & CONSTRUCTORS A Raytheon Company Western Operations	EQUIPMENT DATA SHEET ☒ CDR ☐ TITLE I ☐ TITLE II ☐ TITLE III	ITEM NUMBER GV-08-102	PAGE 1 OF 2
CUSTOMER & LOCATION DOE-RL/WHC HANFORD, WA	PROJECT WRAP FACILITY MODULE 2A	UE&C JOB NO. 6237.006	DATE: 04/15/92
		ACCOUNT NO.	BY: JDC

REVISIONS (DATE & BY)	A		B		C		D	
	E		F		G		H	

SERVICE	MANUFACTURER	NO. REQ'D.	SOURCE OF QUOTE
AUTOMATIC GUIDED VEHICLE		1	

AUTOMATIC GUIDED VEHICLE

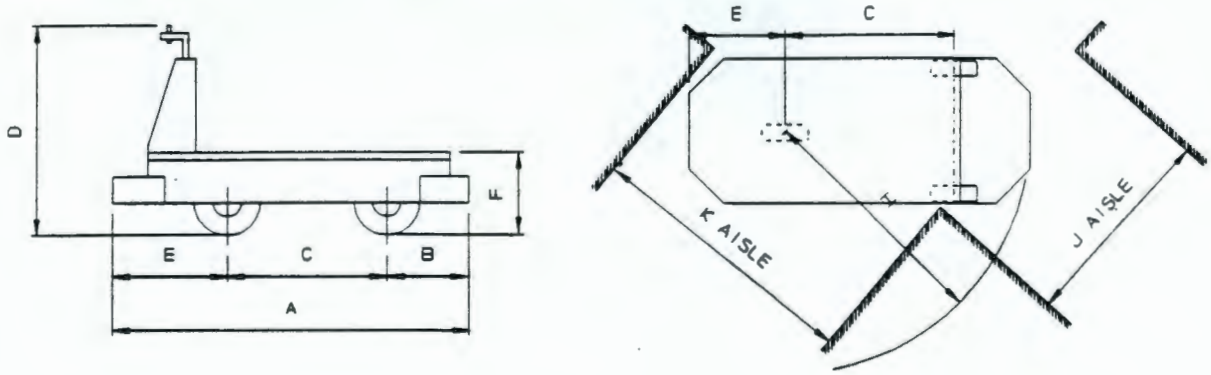

CONDITIONS OF SERVICE		DIMENSIONS	
APPLICATION: TRANSFER DRUMS FROM PROCESSING AREAS TO LAG STORAGE		A: 107"	K: 48"
UNIT LOAD DESCRIPTION: 55 GALLON DRUMS		B: 30.5"	L:
UNIT LOAD SIZE: 22.5" DIA X 34.5" HIGH	SPEED UNLOADED/LOADED: 2.2/2.2 MPH	C: 47.6"	M:
UNIT LOAD WEIGHT: 3,000 LBS	DUTY: 8 HOURS/DAY	D: 83.2"	N:
TOTAL DISTRIBUTED LOAD: 6,000 LBS	NEC AREA CLASS: UNCLASSIFIED	E: 28.9"	P:
		F: 26"	Q:
		G: 54"	R:
		H: 79.8"	S:
CONSTRUCTION		J: 120"	
AGV TYPE: ELECTRIC POWERED	ELECTRICAL REQ.: 3.4 KW/MOTOR		
AGV CLASS:	BATTERY CHARGER TYPE/CAP.:		
AGV CAPACITY: 6,000 LBS	BATTERY TYPE: 48V - 300 AMP HR		
TIRES FRONT/REAR: POLY/POLY	ELECTRIC DRIVE MOTOR: TRACTION		
GRADEABILITY: 5%	STEERING: POWERED		
GUIDANCE: LASER/DEAD RECKONING	BRAKES: ELECTRO MECHANICAL		
TURNING RADIUS: 74.8"	DIAGNOSTICS: REQUIRED		
MIN. AISLE WIDTH: 120"	INDICATING LIGHTS: TURN SIGNALS		
MIN. INTERSECTING AISLE 98"WIDTH:	SHIPPING WT: 4,100 LBS		
OBSTACLE DETECTION: REQUIRED			
TYPE OF CONTROL: AUTO/PENDANT			

9413227.0431

UNITED ENGINEERS & CONSTRUCTORS A Raytheon Company Western Operations	EQUIPMENT DATA SHEET ☒ CDR ☐ TITLE I ☐ TITLE II ☐ TITLE III	ITEM NUMBER GV-08-102	PAGE 2 OF 2

CUSTOMER & LOCATION	PROJECT	UE&C JOB NO. 6237.006	DATE: 04/15/92
DOE-RL/WHC HANFORD, WA	WRAP FACILITY MODULE 2A	ACCOUNT NO.	BY: JDC

REVISIONS (DATE & BY)	A		B		C		D	
	E		F		G		H	

SERVICE	MANUFACTURER	NO. REQ'D.	SOURCE OF QUOTE
AUTOMATIC GUIDED VEHICLE		1	

CHAIN DRIVEN LIVE ROLLER CONVEYOR

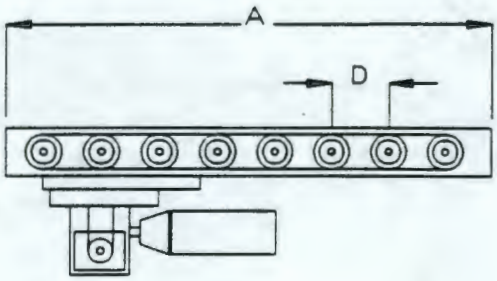

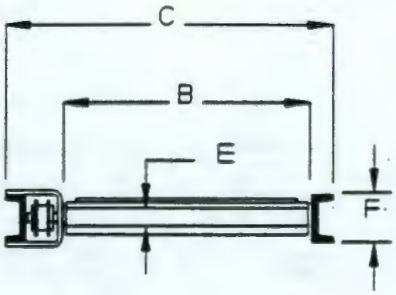

CONDITIONS OF SERVICE		DIMENSIONS	
APPLICATION: TRANSPORTATION OF DRUMS FROM PROCESS AREAS TO STORAGE		A: 36"	E: 2.5"
UNIT LOAD DESCRIPTION: 55 AND 83 GALLON DRUMS		B: 30"	F: 4"
UNIT LOAD SIZE: 26" DIA X 32" HIGH	SPEED: 30 FPM	C: 33"	G:
UNIT LOAD WEIGHT: 3,000 LBS	DUTY: 8 HOURS/DAY	D: 4.5"	H:
IMPACT LOADING: LIGHT	CONVEYOR PITCH/SLOPE: N/A		
	NEC AREA CLASS: UNCLASSIFIED		
CONSTRUCTION			
FRAME MATL. (ASTM): A36	ROLLER MATL. (ASTM): A36		
LENGTH: 36"	ROLLER CAPACITY (Ea.):		
WIDTH (Inside): 33"	DRIVE CAPACITY:		
ACCUMULATION ZONE LENGTH: N/A	ROLLER SPACING: 4.5"		
NO. OF ACCUMULATION ZONES: N/A	ROLLER O.D.: 2.5"		
LEG SPACING: N/A	ROLLER THICKNESS:		
MOTOR RATING: HP	ROLLER RETENTION:		
REDUCER TYPE:	BEARING TYPE:		
MOTOR/REDUCER CONN.:	NEMA RATING:		
DRIVE TYPE: ROLLER TO ROLLER	SHIPPING WT.:		
CHAIN TYPE: NO. 60 CHAIN			

9413227.0432

SECTION 14550

94/3227.0433

THIS PAGE INTENTIONALLY
LEFT BLANK

THIS PAGE INTENTIONALLY
LEFT BLANK

WRAP MODULE 2A

SPECIFICATION SECTION
FOR
14550 CONVEYING SYSTEMS (CONTAINER AND BULK)

TABLE OF CONTENTS

PART 1 GENERAL

1.01 SECTION SCOPE
1.02 RELATED SECTIONS
1.03 REFERENCES
1.04 SYSTEM DESCRIPTION
1.05 SUBMITTALS
1.06 DELIVERY, STORAGE AND HANDLING
1.07 SITE CONDITIONS

PART 2 PRODUCTS

2.01 MANUFACTURERS
2.02 MATERIALS
2.03 EQUIPMENT
2.04 COMPONENTS
2.05 FABRICATION
2.06 SHOP QUALITY CONTROL

PART 3 EXECUTION

3.01 PREPARATION
3.02 ERECTION, INSTALLATION AND APPLICATION
3.03 FIELD QUALITY CONTROL
3.04 ADJUSTING AND CLEANING
3.05 DEMONSTRATION
3.06 PROTECTION

APPENDIX

APPENDIX A DATA SHEETS

WRAP MODULE 2A

SECTION 14550

CONVEYING SYSTEMS (CONTAINER AND BULK)

PART 1 GENERAL

1.01 SECTION SCOPE

A. This specification establishes the requirements for detailed design, fabrication, installation, start-up, and acceptance testing of conveying systems used for conveying containers or bulk material throughout WRAP 2A.

1.02 RELATED SECTIONS

1.03 REFERENCES

A. Anti-Friction Bearing Manufacturer's Association (AFBMA)
AFBMA — All applicable sections.

B. American National Standards Institute (ANSI)
ANSI — All applicable sections.

C American Society for Testing and Materials (ASTM)
ASTM — All applicable sections.

D. American Welding Society (AWS)
AWS D1.1 — "Structural Welding Code."

E. Occupational Safety and Health Administration (OSHA)
OSHA — 29 CFR Part 1910

F. Conveyor Equipment Manufacturers Association (CEMA)
CEMA Std. 404 — Chain Driven Live Roller Conveyors
CEMA Std. 401 — Nonpowered Roller Conveyors
CEMA Std. 350 — Screw Conveyors
CEMA — Belt Conveyors for Build Materials
All applicable sections.

G. National Electric Code (NEC)
NEC — All applicable sections.

H. National Electric Manufacturers Association (NEMA)
NEMA MG-1 — Motors and Generators

I. American Gear Manufacturers Association (AGMA)
AGMA — All applicable sections.

9413227.0435

J. Mechanical Power Transmission Association
MPTA ND 301 All applicable sections.

1.04 SYSTEM DESCRIPTION

A. Conveyor systems are requried at various locations in the WRAP 2A process for the transfer of pallets, drums, boxes and solid waste material. The types of conveyors include powered roller, belt and vibrating. These systems will incorporate special features where necessary to meet the handling requirements of the process, e.g., transfer tables, weight facilities, screens, stops, etc.

B. Data Sheets

Equipment Tag Nos. WBS Area Location Numbers and equipment data sheets for this description are provided in **Appendix A.**

END OF SECTION

WRAP MODULE 2A

APPENDIX A

EQUIPMENT/INSTRUMENT DATA SHEETS

WBS LOCATION	EQUIPMENT TAG	SERVICE
1105	CV-05-501	Inlet Conveyor From Receipt
1105	CV-05-502	Conveyor Feeding Transfer Car
1105	CV-05-561A,B,C	Box Inlet Conveyor
1105	CV-05-630	Conveyor
1105	CV-05-631	Conveyor
1105	CV-05-632	Conveyor
1105	CV-05-521	Vibrating Conveyor
1106	CV-06-101	Repacked Shredder Lead Conveyor
1106	CV-06-201	Evaporator Discharge Conveyor
1106	CV-06-301	Humidifier Discharge Vibratory Conveyor
1108	CV-08-101	Drum NDA Transfer Conveyor
1108	CV-08-102	Drum NDA Transfer Conveyor

WRAP MODULE 2A

WBS LOCATION	EQUIPMENT TAG	SERVICE
1108	CV-08-103	Drum NDA Transfer Conveyor
1108	CV-08-104	Drum NDA Transfer Conveyor
1108	CV-08-301	Drum AS/RS Transfer Conveyor
1108	CV-08-302	Drum AS/RS Transfer Conveyor
1108	CV-08-303	Slave Pallet Transfer Conveyor
1108	CV-08-501	Drum REC/Ship Transfer Conveyor
1108	CV-08-502	Drum REC/Ship Transfer Conveyor
1108	CV-08-503	Drum REC/Ship Transfer Conveyor
1108	CV-08-504	Drum REC/Ship Transfer Conveyor
1109	CV-09-101	Pallet Accumulation Conveyor
1109	CV-09-102	Drum Feeder Conveyor
1109	CV-09-103	New Drum Feed Conveyor

WRAP MODULE 2A

WBS LOCATION	EQUIPMENT TAG	SERVICE
1109	CV-09-104	Drum Discharge Conveyor
1109	CV-09-105	Drum Scale/ Conveyor
1109	CV-09-106	Drum Scale/ Conveyor
1106	S-06-301	Vibrating Screen

9413227.0439

UNITED ENGINEERS & CONSTRUCTORS A Raytheon Company Western Operations	EQUIPMENT DATA SHEET ☒ CDR ☐ TITLE I ☐ TITLE II ☐ TITLE III	ITEM NUMBER CV-05-501	PAGE 1 OF 1
CUSTOMER & LOCATION DOE-RL/WHC HANFORD, WA	PROJECT WRAP FACILITY MODULE 2A	UE&C JOB NO. 6237.006	DATE: 04/13/92
		ACCOUNT NO.	BY: SAS

REVISIONS (DATE & BY)	A		B		C		D	
	E		F		G		H	

SERVICE	MANUFACTURER	NO. REQ'D.	SOURCE OF QUOTE
DRUM CONVEYOR		1	

CHAIN DRIVEN LIVE ROLLER CONVEYOR

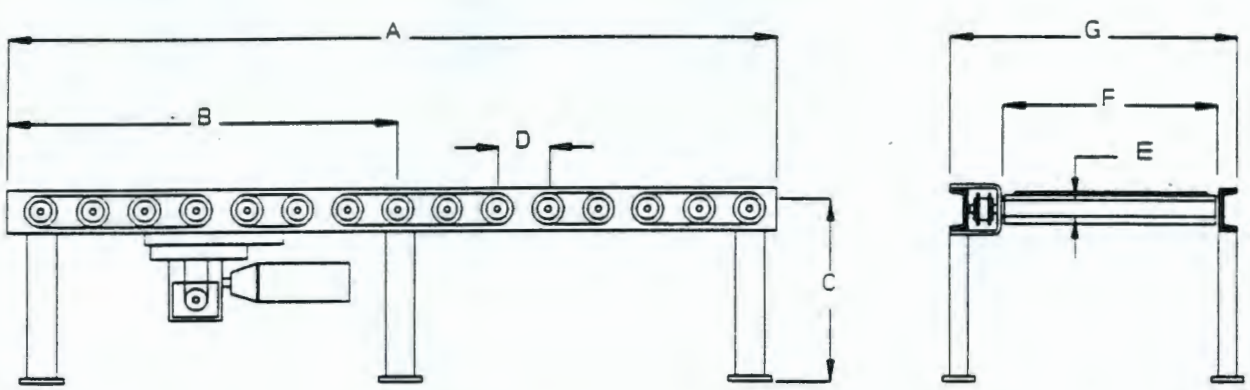

CONDITIONS OF SERVICE		DIMENSIONS	
APPLICATION: TO CONVEY LLRMW DRUMS INTO THE SIZE REDUCTION CELL		A:	E:
UNIT LOAD DESCRIPTION: 55 AND 85 GALLON DRUMS CONTAINING LLRMW		B:	F:
UNIT LOAD SIZE: 26" DIA X 39" HIGH	SPEED:	C:	G:
UNIT LOAD WEIGHT: 3,000 LBS	DUTY: 8 HOURS/DAY	D:	H:
IMPACT LOADING: LIGHT	CONVEYOR PITCH/SLOPE: N/A		
LOCATION: SIZE REDUCTION AND REPACK CELL	NEC AREA CLASS: UNCLASSIFIED		
CONSTRUCTION			
FRAME MATL. (ASTM):	ROLLER MATL. (ASTM):		
LENGTH:	ROLLER CAPACITY (Ea.):		
WIDTH (Inside):	DRIVE CAPACITY:		
ACCUMULATION ZONE LENGTH:	ROLLER SPACING:		
NO. OF ACCUMULATION ZONES:	ROLLER O.D.:		
LEG SPACING:	ROLLER THICKNESS:		
MOTOR RATING:	ROLLER RETENTION:		
REDUCER TYPE:	BEARING TYPE:		
MOTOR/REDUCER CONN.:	NEMA RATING:		
DRIVE TYPE:	SHIPPING WT.:		
CHAIN TYPE:			

9413227.0440

UNITED ENGINEERS & CONSTRUCTORS A Raytheon Company Western Operations	EQUIPMENT DATA SHEET ☒ CDR ☐ TITLE I ☐ TITLE II ☐ TITLE III	ITEM NUMBER CV-05-502	PAGE 1 OF 1

CUSTOMER & LOCATION	PROJECT	UE&C JOB NO. 6237.006	DATE: 04/13/92
DOE-RL/WHC HANFORD, WA	WRAP FACILITY MODULE 2A	ACCOUNT NO.	BY: SAS

REVISIONS (DATE & BY)	A		B		C		D	
	E		F		G		H	

SERVICE	MANUFACTURER	NO. REQ'D.	SOURCE OF QUOTE
DRUM CONVEYOR		1	

CHAIN DRIVEN LIVE ROLLER CONVEYOR

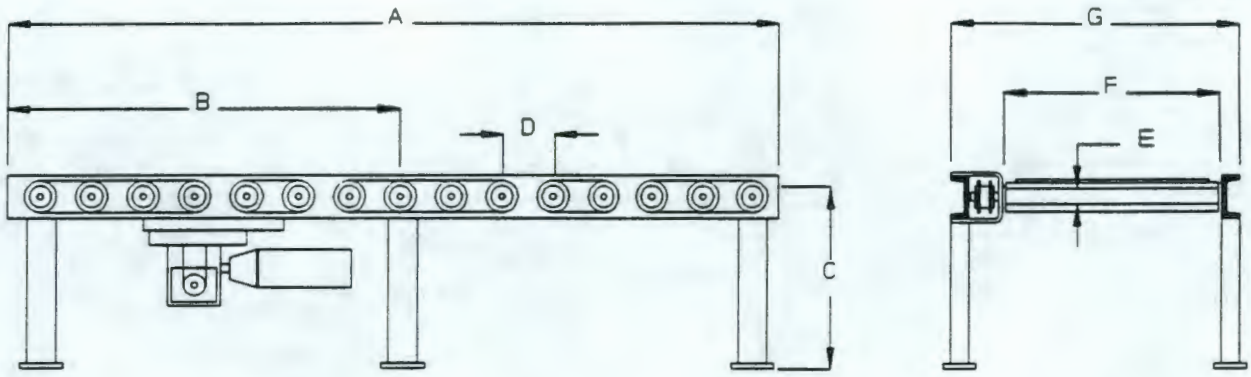

CONDITIONS OF SERVICE		DIMENSIONS	
APPLICATION: TO CONVEY LLRMW DRUMS TO THE TRANSFER CAR		A:	E:
UNIT LOAD DESCRIPTION: 55 AND 85 GALLON DRUMS CONTAINING LLRMW		B:	F:
UNIT LOAD SIZE: 26" DIA X 39" HIGH	SPEED:	C:	G:
UNIT LOAD WEIGHT: 3,000 LBS	DUTY: 8 HOURS/DAY	D:	H:
IMPACT LOADING: LIGHT	CONVEYOR PITCH/SLOPE: N/A		
LOCATION: SIZE REDUCTION AND REPACK CELL	NEC AREA CLASS: UNCLASSIFIED		
CONSTRUCTION			
FRAME MATL. (ASTM):	ROLLER MATL. (ASTM):		
LENGTH:	ROLLER CAPACITY (Ea.):		
WIDTH (Inside):	DRIVE CAPACITY:		
ACCUMULATION ZONE LENGTH:	ROLLER SPACING:		
NO. OF ACCUMULATION ZONES:	ROLLER O.D.:		
LEG SPACING:	ROLLER THICKNESS:		
MOTOR RATING: .75 HP	ROLLER RETENTION:		
REDUCER TYPE:	BEARING TYPE:		
MOTOR/REDUCER CONN.:	NEMA RATING:		
DRIVE TYPE:	SHIPPING WT.:		
CHAIN TYPE:			

UNITED ENGINEERS & CONSTRUCTORS A Raytheon Company Western Operations	EQUIPMENT DATA SHEET ☒ CDR ☐ TITLE I ☐ TITLE II ☐ TITLE III	ITEM NUMBER CV-06-561A,B,C	PAGE 1 OF 1
CUSTOMER & LOCATION DOE-RL/WHC HANFORD, WA	PROJECT WRAP FACILITY MODULE 2A	UE&C JOB NO. 6237.006	DATE: 04/13/92
		ACCOUNT NO.	BY: SAS

REVISIONS (DATE & BY)	A		B		C		D	
	E		F		G		H	

SERVICE	MANUFACTURER	NO. REQ'D.	SOURCE OF QUOTE
BOX CONVEYOR		3	

CHAIN DRIVEN LIVE ROLLER CONVEYOR

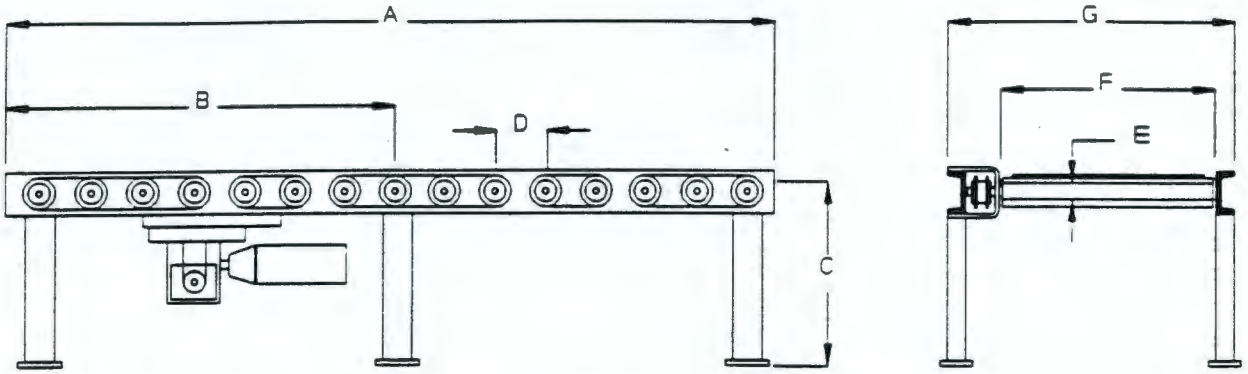

CONDITIONS OF SERVICE		DIMENSIONS	
APPLICATION: TO CONVEY LLRMW BOXES INTO BOX BREAKDOWN CELL		A:	E:
UNIT LOAD DESCRIPTION: BOXES CONTAINING LLRMW		B:	F:
UNIT LOAD SIZE: 5' X 5' X 9'	SPEED: TBD	C:	G:
UNIT LOAD WEIGHT: 12,000 LBS	DUTY: 8 HOURS/DAY	D:	H:
IMPACT LOADING: HEAVY	CONVEYOR PITCH/SLOPE: N/A		
LOCATION: BOX BREAKDOWN CELL	NEC AREA CLASS: UNCLASSIFIED		

CONSTRUCTION			
FRAME MATL. (ASTM):	ROLLER MATL. (ASTM):		
LENGTH:	ROLLER CAPACITY (Ea.):		
WIDTH (Inside):	DRIVE CAPACITY:		
ACCUMULATION ZONE LENGTH:	ROLLER SPACING:		
NO. OF ACCUMULATION ZONES:	ROLLER O.D.:		
LEG SPACING:	ROLLER THICKNESS:		
MOTOR RATING:	ROLLER RETENTION:		
REDUCER TYPE:	BEARING TYPE:		
MOTOR/REDUCER CONN.:	NEMA RATING:		
DRIVE TYPE:	SHIPPING WT.:		
CHAIN TYPE:			

9413227.0442

UNITED ENGINEERS & CONSTRUCTORS A Raytheon Company Western Operations	EQUIPMENT DATA SHEET ☒ CDR ☐ TITLE I ☐ TITLE II ☐ TITLE III	ITEM NUMBER CV-05-630	PAGE 1 OF 1
CUSTOMER & LOCATION DOE-RL/WHC HANFORD, WA	PROJECT WRAP FACILITY MODULE 2A	UE&C JOB NO. 6237.006	DATE: 06/21/92
		ACCOUNT NO.	BY: VAW

REVISIONS (DATE & BY)	A		B		C		D	
	E		F		G		H	

SERVICE	MANUFACTURER	NO. REQ'D.	SOURCE OF QUOTE
DRUM CONVEYOR		1	

CHAIN DRIVEN LIVE ROLLER CONVEYOR

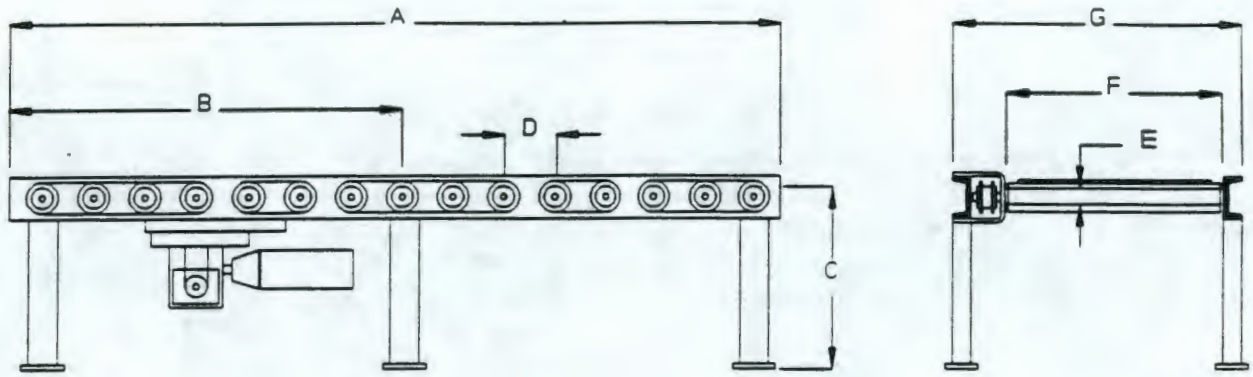

CONDITIONS OF SERVICE		DIMENSIONS	
APPLICATION: TO CONVEY LLRMW IN DRUMS BETWEEN LIFT TABLE AND AGV		A: 5'-0"	E: 2.5"
UNIT LOAD DESCRIPTION: 55 AND 85 CALLON DRUMS CONTAINING LLRMW		B: 60"	F: 30"
UNIT LOAD SIZE: 26" DIA X 39" HIGH	SPEED:	C: 21"	G: 33"
UNIT LOAD WEIGHT: 3,000 LBS	DUTY: 8 HOURS/DAY	D: 4"	H:
IMPACT LOADING: LIGHT	CONVEYOR PITCH/SLOPE: N/A		
LOCATION: SAMPLE MANAGEMENT AREA	NEC AREA CLASS: UNCLASSIFIED		

CONSTRUCTION			
FRAME MATL. (ASTM):	ROLLER MATL. (ASTM):		
LENGTH:	ROLLER CAPACITY (Ea.):		
WIDTH (Inside):	DRIVE CAPACITY:		
ACCUMULATION ZONE LENGTH:	ROLLER SPACING:		
NO. OF ACCUMULATION ZONES:	ROLLER O.D.:		
LEG SPACING:	ROLLER THICKNESS:		
MOTOR RATING:	ROLLER RETENTION:		
REDUCER TYPE:	BEARING TYPE:		
MOTOR/REDUCER CONN.:	NEMA RATING:		
DRIVE TYPE:	SHIPPING WT.:		
CHAIN TYPE:			

UNITED ENGINEERS & CONSTRUCTORS A Raytheon Company Western Operations	EQUIPMENT DATA SHEET ☒ CDR ☐ TITLE I ☐ TITLE II ☐ TITLE III	ITEM NUMBER CV-05-631	PAGE 1 OF 1
CUSTOMER & LOCATION DOE-RL/WHC HANFORD, WA	PROJECT WRAP FACILITY MODULE 2A	UE&C JOB NO. 6237.006	DATE: 06/21/92
		ACCOUNT NO.	BY: VAW

REVISIONS (DATE & BY)	A		B		C		D	
	E		F		G		H	

SERVICE	MANUFACTURER	NO. REQ'D.	SOURCE OF QUOTE
DRUM CONVEYOR		1	

CHAIN DRIVEN LIVE ROLLER CONVEYOR

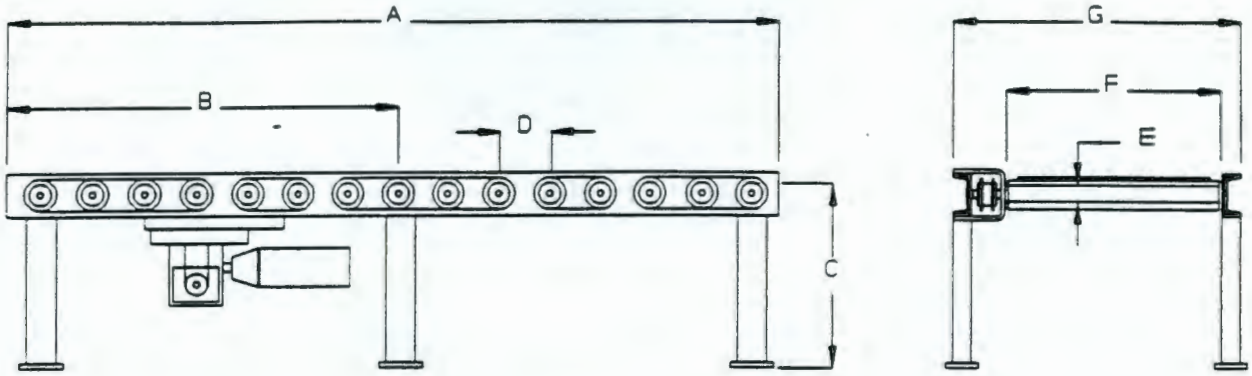

CONDITIONS OF SERVICE		DIMENSIONS	
APPLICATION: TO CONVEY LLRMW IN DRUMS BETWEEN LIFT TABLE AND AGV		A: 5'-0"	E: 2.5"
UNIT LOAD DESCRIPTION: 55 AND 85 GALLON DRUMS CONTAINING LLRMW		B: 60"	F: 30"
UNIT LOAD SIZE: 26" DIA X 39" HIGH	SPEED:	C: 21"	G: 33"
UNIT LOAD WEIGHT: 3,000 LBS	DUTY: 8 HOURS/DAY	D: 4"	H:
IMPACT LOADING: LIGHT	CONVEYOR PITCH/SLOPE: N/A		
LOCATION: SAMPLE MANAGEMENT AREA	NEC AREA CLASS: UNCLASSIFIED		
CONSTRUCTION			
FRAME MATL. (ASTM):	ROLLER MATL. (ASTM):		
LENGTH:	ROLLER CAPACITY (Ea.):		
WIDTH (Inside):	DRIVE CAPACITY:		
ACCUMULATION ZONE LENGTH:	ROLLER SPACING:		
NO. OF ACCUMULATION ZONES:	ROLLER O.D.:		
LEG SPACING:	ROLLER THICKNESS:		
MOTOR RATING:	ROLLER RETENTION:		
REDUCER TYPE:	BEARING TYPE:		
MOTOR/REDUCER CONN.:	NEMA RATING:		
DRIVE TYPE:	SHIPPING WT.:		
CHAIN TYPE:			

9413227.0444

UNITED ENGINEERS & CONSTRUCTORS A Raytheon Company Western Operations	EQUIPMENT DATA SHEET ☒ CDR ☐ TITLE I ☐ TITLE II ☐ TITLE III	ITEM NUMBER CV-05-632	PAGE 1 OF 1

CUSTOMER & LOCATION	PROJECT	UE&C JOB NO. 6237.006	DATE: 06/21/92
DOE-RL/WHC HANFORD, WA	WRAP FACILITY MODULE 2A	ACCOUNT NO.	BY: VAW

REVISIONS (DATE & BY)	A		B		C		D	
	E		F		G		H	

SERVICE	MANUFACTURER	NO. REQ'D.	SOURCE OF QUOTE
DRUM CONVEYOR		1	

CHAIN DRIVEN LIVE ROLLER CONVEYOR

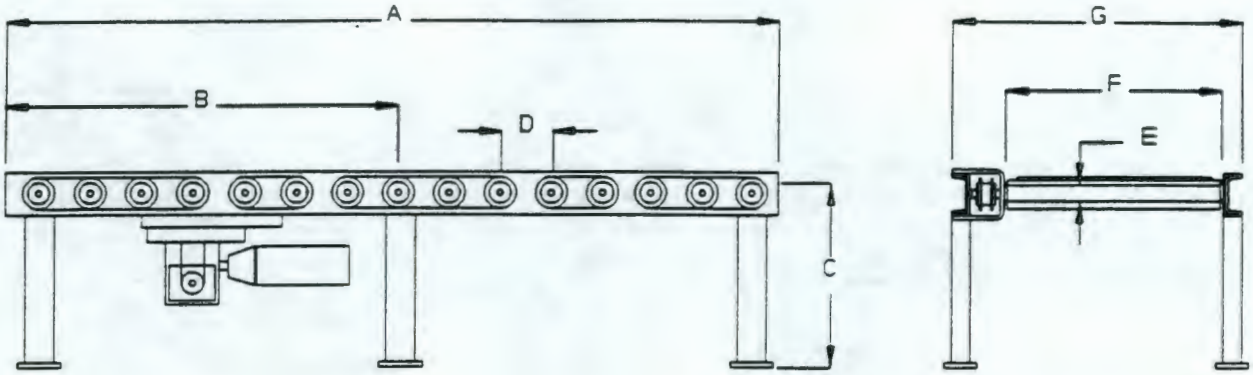

CONDITIONS OF SERVICE		DIMENSIONS	
APPLICATION: TO CONVEY LLRMW IN DRUMS FOR LOT VERIFICATION SAMPLING		A: 30'-0"	E: 2.5"
UNIT LOAD DESCRIPTION: 55 AND 85 GALLON DRUMS CONTAINING LLRMW		B: 60"	F: 30"
UNIT LOAD SIZE: 22.5" DIA X 34.5" HIGH	SPEED:	C: 21"	G: 33"
UNIT LOAD WEIGHT: 3,000 LBS	DUTY: 8 HOURS/DAY	D: 4"	H:
IMPACT LOADING: LIGHT	CONVEYOR PITCH/SLOPE: N/A		
LOCATION: SAMPLE MANAGEMENT AREA	NEC AREA CLASS: UNCLASSIFIED		
CONSTRUCTION			
FRAME MATL. (ASTM): A36	ROLLER MATL. (ASTM): A36		
LENGTH: 30'-0" W/90° CHAIN TRANSFER	ROLLER CAPACITY (Ea.):		
WIDTH (Inside): 30"	DRIVE CAPACITY:		
ACCUMULATION ZONE LENGTH: 30"	ROLLER SPACING: 4"		
NO. OF ACCUMULATION ZONES: 8	ROLLER O.D.: 2.5"		
LEG SPACING: 60"	ROLLER THICKNESS: 11 GAUGE		
MOTOR RATING: 1.5 HP / .75 HP	ROLLER RETENTION: PIN/SPRING		
REDUCER TYPE: RA WORM	BEARING TYPE: BALL BEARING		
MOTOR/REDUCER CONN.: DIRECT	NEMA RATING: 1		
DRIVE TYPE: ROLLER TO ROLLER	SHIPPING WT.: 2,700 LBS		
CHAIN TYPE: NO. 60 ROLLER CHAIN			

UNITED ENGINEERS & CONSTRUCTORS A Raytheon Company Western Operations	EQUIPMENT DATA SHEET ■ CDR ☐ TITLE I ☐ TITLE II ☐ TITLE III	ITEM NUMBER CV-05-521	PAGE 1 OF 1
CUSTOMER & LOCATION DOE-RL/WHC HANFORD, WA	PROJECT WRAP FACILITY MODULE 2A	UE&C JOB NO. 6237.006	DATE: 04/13/92
		ACCOUNT NO.	BY: SAS

REVISIONS (DATE & BY)	A		B		C		D	
	E		F		G		H	

SERVICE	MANUFACTURER	NO. REQ'D.	SOURCE OF QUOTE
WASTE CONVEYOR		1	

VIBRATING CONVEYOR

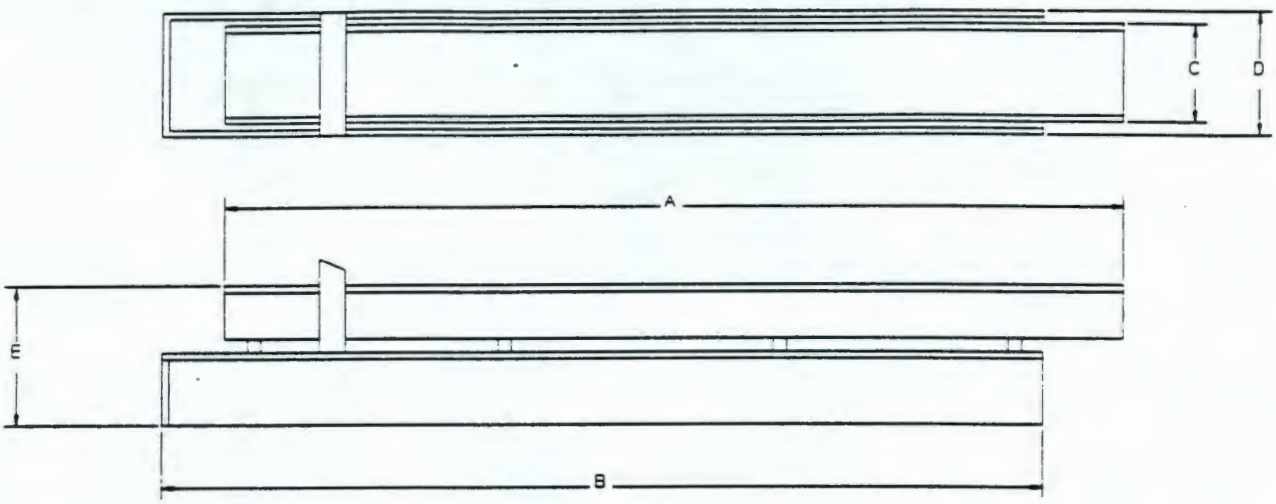

CONDITIONS OF SERVICE		DIMENSIONS	
APPLICATION: CONVEYING LLRMW WEIGH HOPPER		A: 11'-0"	E:
UNIT LOAD DESCRIPTION: LLRMW FROM 55 AND 83 GALLON DRUMS		B:	F:
UNIT LOAD SIZE: 2" X 2" X 2"	SPEED: 25 CU FT/HOUR	C: 20"	G:
UNIT LOAD WEIGHT: 3,000 LBS (TOTAL)	DUTY: 8 HOURS/DAY	D:	H:
IMPACT LOADING: HEAVY	CONVEYOR PITCH/SLOPE:		
LOCATION: SHREDDER & REPACK PROCESS ENCL	NEC AREA CLASS: UNCLASSIFIED		
CONSTRUCTION			
MOTOR HP:			
CONSTRUCTION: STAINLESS STEEL			
WEIGHT: 1,500 LBS			

9413227.0446

UNITED ENGINEERS & CONSTRUCTORS A Raytheon Company Western Operations	EQUIPMENT DATA SHEET ☒ CDR ☐ TITLE I ☐ TITLE II ☐ TITLE III	ITEM NUMBER CV-06-101	PAGE 1 OF 1

CUSTOMER & LOCATION	PROJECT	UE&C JOB NO. 6237.006	DATE: 04/08/92
DOE-RL/WHC HANFORD, WA	WRAP FACILITY MODULE 2A	ACCOUNT NO.	BY: RLH

REVISIONS (DATE & BY)	A	04/24/92	RLH	B	04/29/92	RLH	C			D	
	E			F			G			H	

SERVICE	MANUFACTURER	NO. REQ'D.	SOURCE OF QUOTE
REPACKED SHREDDED LEAD CONVEYOR		1	

CHAIN DRIVEN LIVE ROLLER CONVEYOR

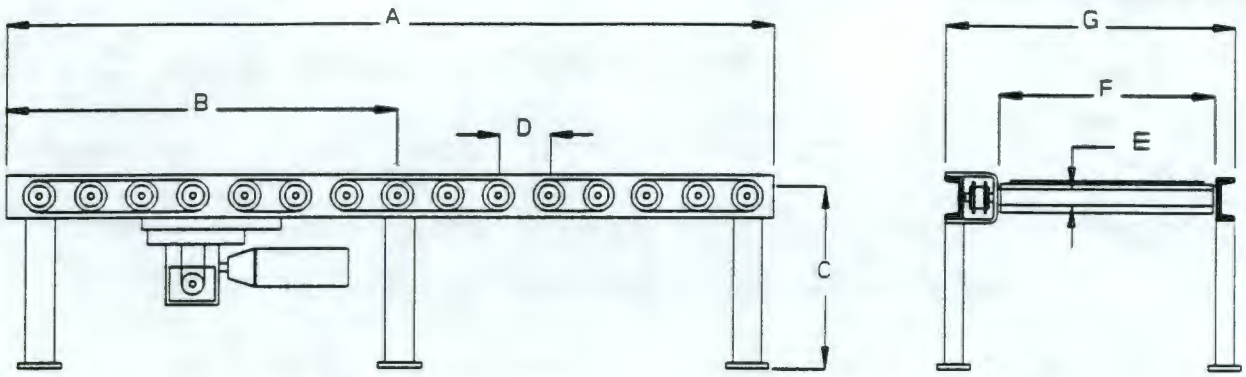

CONDITIONS OF SERVICE		DIMENSIONS	
APPLICATION: CONVEY/STORE 55 GALLON DRUMS		A: 36"	E: 2.5"
UNIT LOAD DESCRIPTION: 55 CALLON DRUMS W/SHREDDED BULK LEAD (700 LB/DAY MAX)		B:	F: 30"
UNIT LOAD SIZE: 55 GAL DRUMS (1 DRUM/DAY)	SPEED: 30 FPM	C: 21"	G:
UNIT LOAD WEIGHT: 700 LBS/DRUM	DUTY: 8 HOURS/DAY	D: 4"	H:
IMPACT LOADING: MODERATE	CONVEYOR PITCH/SLOPE: HORIZONTAL		
LOCATION:	NEC AREA CLASS: UNCLASSIFIED		

CONSTRUCTION			
FRAME MATL. (ASTM): A36	ROLLER MATL. (ASTM): A36		
LENGTH:	ROLLER CAPACITY (Ea.):		
WIDTH (Inside):	DRIVE CAPACITY:		
ACCUMULATION ZONE LENGTH:	ROLLER SPACING:		
NO. OF ACCUMULATION ZONES:	ROLLER O.D.:		
LEG SPACING:	ROLLER THICKNESS:		
MOTOR RATING: .75 HP	ROLLER RETENTION:		
REDUCER TYPE:	BEARING TYPE:		
MOTOR/REDUCER CONN.:	NEMA RATING:		
DRIVE TYPE: ROLLER TO ROLLER	SHIPPING WT.: 625 LBS		
CHAIN TYPE: NO 60 ROLLER CHAIN			

9413227.0447

UNITED ENGINEERS & CONSTRUCTORS A Raytheon Company Western Operations	EQUIPMENT DATA SHEET ☒ CDR ☐ TITLE I ☐ TITLE II ☐ TITLE III	ITEM NUMBER CV-06-201	PAGE 1 OF 1
CUSTOMER & LOCATION DOE-RL/WHC HANFORD, WA	PROJECT WRAP FACILITY MODULE 2A	UE&C JOB NO. 6237.006	DATE: 04/08/92
		ACCOUNT NO.	BY: RLH

REVISIONS (DATE & BY)								
A	04/24/92	RLH	B	04/29/92	RLH	C		D
E			F			G		H

SERVICE	MANUFACTURER	NO. REQ'D.	SOURCE OF QUOTE
EVAPORATOR DISCHARGE CONVEYOR		1	

CHAIN DRIVEN LIVE ROLLER CONVEYOR

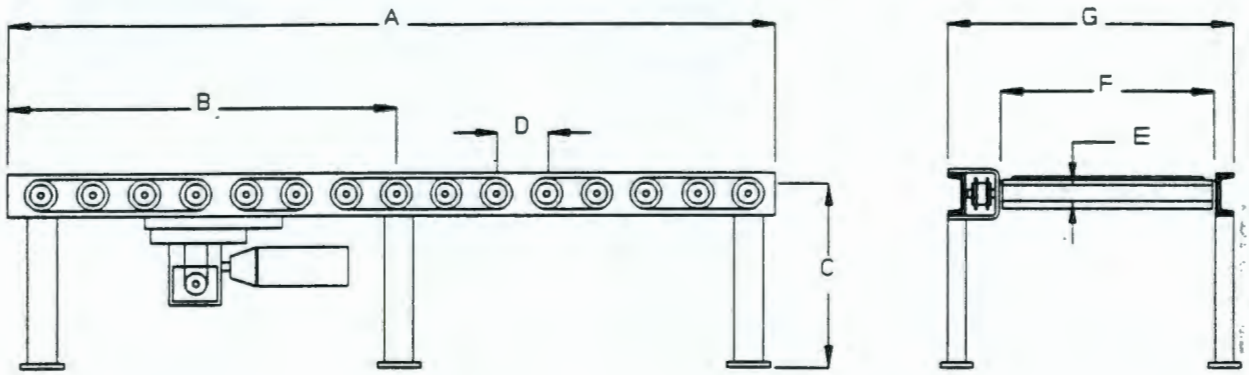

CONDITIONS OF SERVICE		DIMENSIONS	
APPLICATION: CONVEY/STORE DRUMS FROM RETORT		A: 6'-0"	E: 2.5"
UNIT LOAD DESCRIPTION: 55 GALLON DRUMS WITH RETORTED WASTE (600 LB/HR)		B:	F: 2'-6"
UNIT LOAD SIZE: 55 GALLON DRUMS	SPEED: 35 FPM	C: 1'-9"	G:
UNIT LOAD WEIGHT: 210 LBS/DRUM	DUTY: 8 HOURS/DAY	D: 4"	H:
IMPACT LOADING: MODERATE	CONVEYOR PITCH/SLOPE: N/A		
LOCATION: SPECIAL WASTE	NEC AREA CLASS: UNCLASSIFIED		
CONSTRUCTION			
FRAME MATL. (ASTM): A36	ROLLER MATL. (ASTM): A36		
LENGTH:	ROLLER CAPACITY (Ea.):		
WIDTH (Inside): 30"	DRIVE CAPACITY:		
ACCUMULATION ZONE LENGTH: 30"	ROLLER SPACING:		
NO. OF ACCUMULATION ZONES: 3	ROLLER O.D.:		
LEG SPACING:	ROLLER THICKNESS:		
MOTOR RATING: .75 HP	ROLLER RETENTION:		
REDUCER TYPE:	BEARING TYPE:		
MOTOR/REDUCER CONN.:	NEMA RATING:		
DRIVE TYPE: ROLLER TO ROLLER	SHIPPING WT.: 700 LBS		
CHAIN TYPE: NO. 60 ROLLER CHAIN			

9413227.0448

UNITED ENGINEERS & CONSTRUCTORS A Raytheon Company Western Operations	EQUIPMENT DATA SHEET ☒ CDR ☐ TITLE I ☐ TITLE II ☐ TITLE III	ITEM NUMBER CV-06-301	PAGE 1 OF 1

CUSTOMER & LOCATION	PROJECT	UE&C JOB NO. 6237.006	DATE: 04/08/92
DOE-RL/WHC HANFORD, WA	WRAP FACILITY MODULE 2A	ACCOUNT NO.	BY: RLH

REVISIONS (DATE & BY)	A		B		C		D	
	E		F		G		H	

SERVICE	MANUFACTURER	NO. REQ'D.	SOURCE OF QUOTE
HUMIDIFIER DISCHARGE CONVEYOR		1	

VIBRATING CONVEYOR

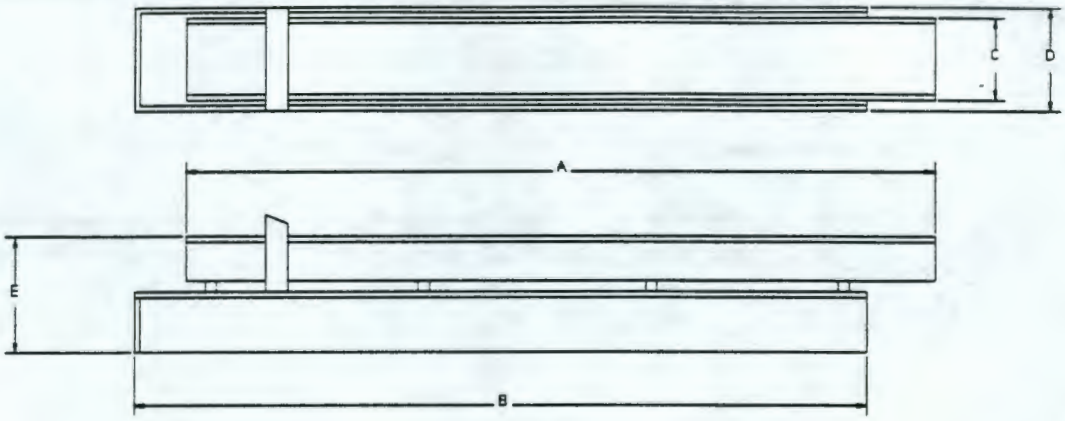

CONDITIONS OF SERVICE		DIMENSIONS	
APPLICATION: CONVEY/STORE METALS FROM HUMIDIFIER TO REDRUMING		A: 20'-0"	E:
UNIT LOAD DESCRIPTION: FINE AND COARSE REACTIVE METALS (1,000 LBS/DAY)		B: 18'-0"	F:
UNIT LOAD SIZE: 5 FT^3	SPEED:	C: 4'0"	G:
UNIT LOAD WEIGHT: 1,000 LBS	DUTY: 24 HOURS/DAY	D:	H:
IMPACT LOADING: LIGHT	CONVEYOR PITCH/SLOPE:		
LOCATION: REACTIVE METALS ENCLOSURE	NEC AREA CLASS:		
CONSTRUCTION			
FRAME MATL. (ASTM): A36	BELTING:		
LENGTH:	BELT CAPACITY:		
WIDTH (Inside):	DRIVE PULLEY:		
ACCUMULATION ZONE LENGTH:	TAIL PULLEY:		
NO. OF ACCUMULATION ZONES:	RETURN ROLLER:		
LEG SPACING:	BEARING TYPE:		
MOTOR RATING: 3 HP	NEMA RATING:		
REDUCER TYPE:	SHIPPING WT.: 3,000 LBS		
MOTOR/REDUCER CONN.:	TRAY: 2 TIER (COARSE/FINES)		
DRIVE TYPE:	INLET: SEGREGATED - COARSE/FINES		
CHAIN TYPE:			

UNITED ENGINEERS & CONSTRUCTORS A Raytheon Company Western Operations	EQUIPMENT DATA SHEET ☒ CDR ☐ TITLE I ☐ TITLE II ☐ TITLE III	ITEM NUMBER CV-08-101	PAGE 1 OF 1
CUSTOMER & LOCATION DOE-RL/WHC HANFORD, WA	PROJECT WRAP FACILITY MODULE 2A	UE&C JOB NO. 6237.006 / ACCOUNT NO.	DATE: 04/03/92 / BY: JDC

REVISIONS (DATE & BY)	A		B		C		D	
	E		F		G		H	

SERVICE	MANUFACTURER	NO. REQ'D.	SOURCE OF QUOTE
DRUM NDA TRANSFER CONVEYOR		1	

CHAIN DRIVEN LIVE ROLLER CONVEYOR

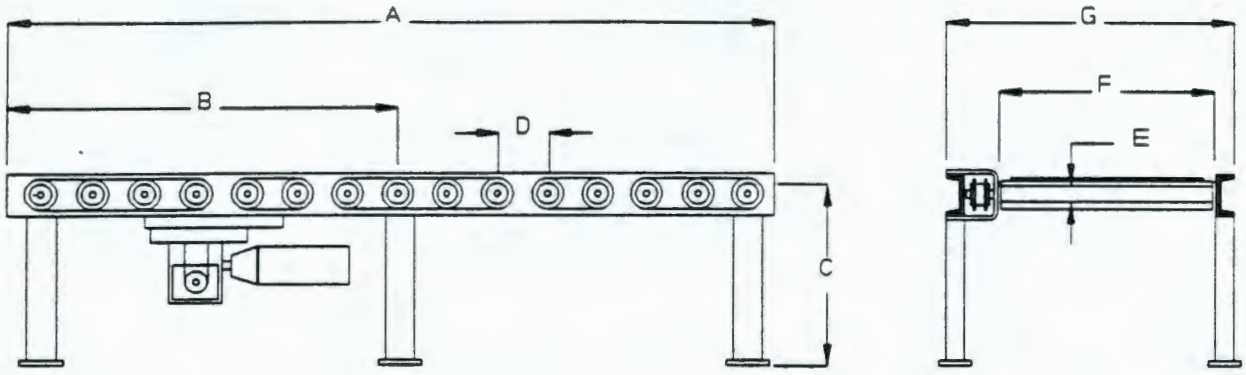

CONDITIONS OF SERVICE		DIMENSIONS	
APPLICATION: DRUM NDA TRANSFER		A: 36"	E: 2.5"
UNIT LOAD DESCRIPTION: 55 GALLON WASTE DRUMS		B: N/A	F: 30"
UNIT LOAD SIZE: 22.5" DIA X 34.5" HIGH	SPEED: 35 FPM	C: 21"	G: 33"
UNIT LOAD WEIGHT: 1,000 LBS	DUTY: 8 HOURS/DAY	D: 4"	H:
IMPACT LOADING: LIGHT	CONVEYOR PITCH/SLOPE: N/A		
	NEC AREA CLASS: UNCLASSIFIED		
CONSTRUCTION			
FRAME MATL. (ASTM): A36	ROLLER MATL. (ASTM): A36		
LENGTH: 36"	ROLLER CAPACITY (Ea.):		
WIDTH (Inside): 30"	DRIVE CAPACITY: 6,050 LBS		
ACCUMULATION ZONE LENGTH: N/A	ROLLER SPACING: 4"		
NO. OF ACCUMULATION ZONES: N/A	ROLLER O.D.: 2.5"		
LEG SPACING: N/A	ROLLER THICKNESS: 11 GAGE		
MOTOR RATING: .75	ROLLER RETENTION: PIN/SPRING		
REDUCER TYPE: RA WORM	BEARING TYPE: BALL BEARINGS		
MOTOR/REDUCER CONN.: DIRECT	NEMA RATING: 1		
DRIVE TYPE: ROLLER TO ROLLER	SHIPPING WT.: 374 LBS		
CHAIN TYPE: NO. 60 ROLLER CHAIN			

9413227.0450

UNITED ENGINEERS & CONSTRUCTORS A Raytheon Company Western Operations	EQUIPMENT DATA SHEET ☒ CDR ☐ TITLE I ☐ TITLE II ☐ TITLE III	ITEM NUMBER CV-08-102	PAGE 1 OF 1

CUSTOMER & LOCATION	PROJECT	UE&C JOB NO. 6237.006	DATE: 04/03/92
DOE-RL/WHC HANFORD, WA	WRAP FACILITY MODULE 2A	ACCOUNT NO.	BY: JDC

REVISIONS (DATE & BY)	A		B		C		D	
	E		F		G		H	-

SERVICE	MANUFACTURER	NO. REQ'D.	SOURCE OF QUOTE
DRUM NDA TRANSFER CONVEYOR	ROACH	1	

CHAIN DRIVEN LIVE ROLLER CONVEYOR

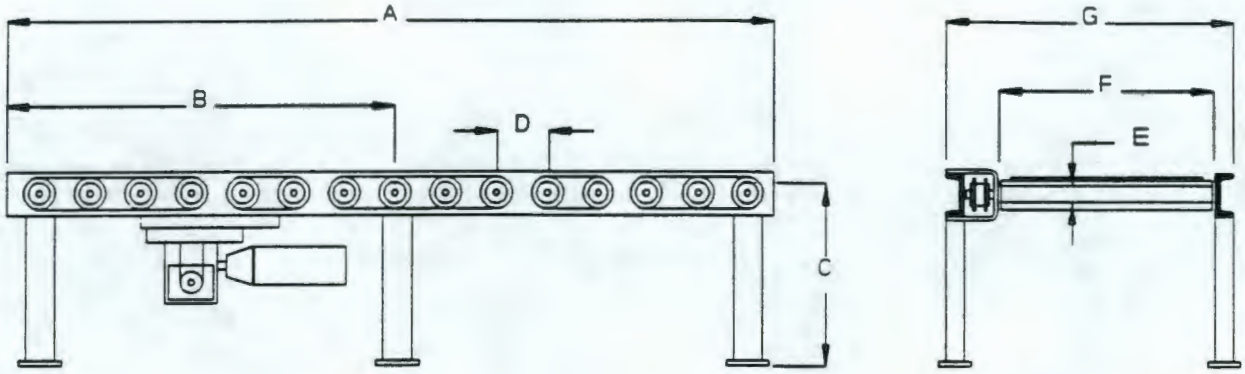

CONDITIONS OF SERVICE		DIMENSIONS	
APPLICATION: DRUM NDA TRANSFER		A: 36"	E: 2.5"
UNIT LOAD DESCRIPTION: 55 GALLON WASTE DRUMS		B: N/A	F: 30"
UNIT LOAD SIZE: 22.5" DIA X 34.5" HIGH	SPEED: 35 FPM	C: 21"	G: 33"
UNIT LOAD WEIGHT: 1,000 LBS	DUTY: 8 HOURS/DAY	D: 4"	H:
IMPACT LOADING: LIGHT	CONVEYOR PITCH/SLOPE: N/A		
	NEC AREA CLASS: UNCLASSIFIED		
	-		
CONSTRUCTION			
FRAME MATL. (ASTM): A36	ROLLER MATL. (ASTM): A36		
LENGTH: 36"	ROLLER CAPACITY (Ea.):		
WIDTH (Inside): 30"	DRIVE CAPACITY: 6,050		
ACCUMULATION ZONE LENGTH: N/A	ROLLER SPACING: 4"		
NO. OF ACCUMULATION ZONES: N/A	ROLLER O.D.: 2.5"		
LEG SPACING: N/A	ROLLER THICKNESS: 11 GAGE		
MOTOR RATING: .75 HP	ROLLER RETENTION: PIN/SPRING		
REDUCER TYPE: RA WORM	BEARING TYPE: BALL BEARING		
MOTOR/REDUCER CONN.: DIRECT	NEMA RATING: 1		
DRIVE TYPE: ROLLER TO ROLLER	SHIPPING WT.: 374 LBS		
CHAIN TYPE: NO. 60 ROLLER CHAIN			

UNITED ENGINEERS & CONSTRUCTORS A Raytheon Company Western Operations	EQUIPMENT DATA SHEET ☒ CDR ☐ TITLE I ☐ TITLE II ☐ TITLE III	ITEM NUMBER CV-08-103	PAGE 1 OF 1
CUSTOMER & LOCATION DOE-RL/WHC HANFORD, WA	PROJECT WRAP FACILITY MODULE 2A	UE&C JOB NO. 6237.006	DATE: 04/03/92
		ACCOUNT NO.	BY: JDC

REVISIONS (DATE & BY)	A		B		C		D	
	E		F		G		H	

SERVICE	MANUFACTURER	NO. REQ'D.	SOURCE OF QUOTE
DRUM NDA TRANSFER CONVEYOR		1	

CHAIN DRIVEN LIVE ROLLER CONVEYOR

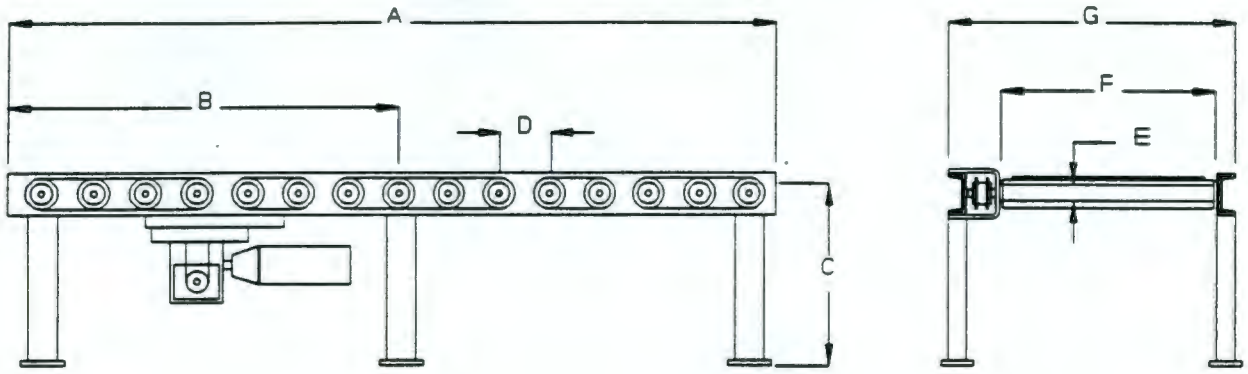

CONDITIONS OF SERVICE		DIMENSIONS	
APPLICATION: DRUM NDA TRANSFER		A: 36"	E: 2.5"
UNIT LOAD DESCRIPTION: 55 GALLON WASTE DRUMS		B: N/A	F: 30"
UNIT LOAD SIZE: 22.5" DIA X 34.5" HIGH	SPEED: 35 FPM	C: 21"	G: 33"
UNIT LOAD WEIGHT: 1,000 LBS	DUTY: 8 HOURS/DAY	D: 4"	H:
IMPACT LOADING: LIGHT	CONVEYOR PITCH/SLOPE: N/A		
	NEC AREA CLASS: UNCLASSIFIED		

CONSTRUCTION			
FRAME MATL. (ASTM): A36	ROLLER MATL. (ASTM): A36		
LENGTH: 36"	ROLLER CAPACITY (Ea.):		
WIDTH (Inside): 30"	DRIVE CAPACITY: 6,050 LBS		
ACCUMULATION ZONE LENGTH: N/A	ROLLER SPACING: 4"		
NO. OF ACCUMULATION ZONES: N/A	ROLLER O.D.: 2.5"		
LEG SPACING: N/A	ROLLER THICKNESS: 11 GAGE		
MOTOR RATING: .75 HP	ROLLER RETENTION: PIN/SPRING		
REDUCER TYPE: RA WORM	BEARING TYPE: BALL BEARING		
MOTOR/REDUCER CONN.: DIRECT	NEMA RATING: 1		
DRIVE TYPE: ROLLER TO ROLLER	SHIPPING WT.: 374 LBS		
CHAIN TYPE: NO. 60 ROLLER CHAIN			

9413227.0452

UNITED ENGINEERS & CONSTRUCTORS A Raytheon Company Western Operations	EQUIPMENT DATA SHEET ☒ CDR ☐ TITLE I ☐ TITLE II ☐ TITLE III	ITEM NUMBER CV-08-104	PAGE 1 OF 1
CUSTOMER & LOCATION DOE-RL/WHC HANFORD, WA	PROJECT WRAP FACILITY MODULE 2A	UE&C JOB NO. 6237.006	DATE: 04/03/92
		ACCOUNT NO.	BY: JDC

REVISIONS (DATE & BY)	A		B		C		D	
	E		F		G		H	

SERVICE	MANUFACTURER	NO. REQ'D.	SOURCE OF QUOTE
DRUM NDA TRANSFER CONVEYOR		1	

CHAIN DRIVEN LIVE ROLLER CONVEYOR

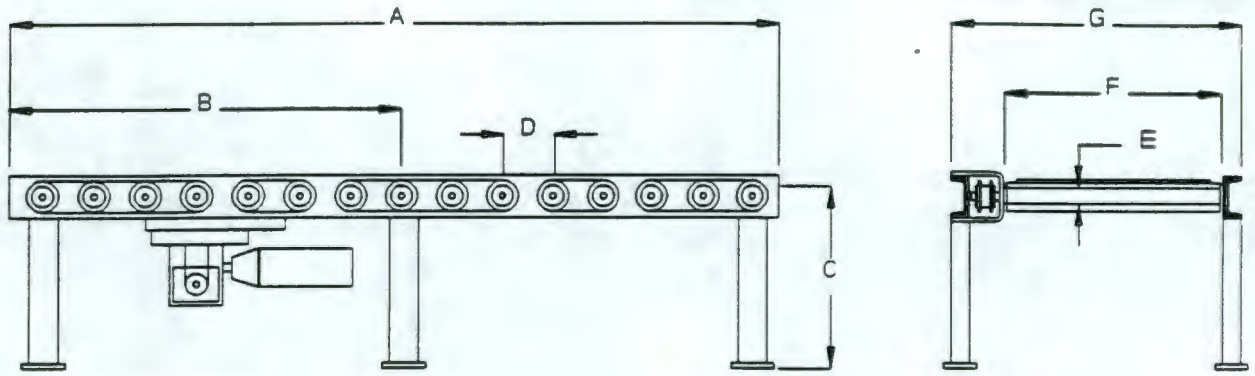

CONDITIONS OF SERVICE		DIMENSIONS	
APPLICATION: DRUM NDA TRANSFER		A: 36"	E: 2.5"
UNIT LOAD DESCRIPTION: 55 GALLON WASTE DRUMS		B: N/A	F: 30"
UNIT LOAD SIZE: 22.5" DIA X 34.5" HIGH	SPEED: 35 FPM	C: 21"	G: 33"
UNIT LOAD WEIGHT: 1,000 LBS	DUTY: 8 HOURS/DAY	D: 4"	H:
IMPACT LOADING: LIGHT	CONVEYOR PITCH/SLOPE: N/A		
	NEC AREA CLASS: UNCLASSIFIED		

CONSTRUCTION	
FRAME MATL. (ASTM): A36	ROLLER MATL. (ASTM): A36
LENGTH: 36"	ROLLER CAPACITY (Ea.):
WIDTH (Inside): 30"	DRIVE CAPACITY: 6,050 LBS
ACCUMULATION ZONE LENGTH: N/A	ROLLER SPACING: 4"
NO. OF ACCUMULATION ZONES: N/A	ROLLER O.D.: 2.5"
LEG SPACING: N/A	ROLLER THICKNESS: 11 GAGE
MOTOR RATING: .75 HP	ROLLER RETENTION: PIN/SPRING
REDUCER TYPE: RA WORM	BEARING TYPE: BALL BEARING
MOTOR/REDUCER CONN.: DIRECT	NEMA RATING: 1
DRIVE TYPE: ROLLER TO ROLLER	SHIPPING WT.: 374 LBS
CHAIN TYPE: NO. 60 ROLLER CHAIN	

UNITED ENGINEERS & CONSTRUCTORS A Raytheon Company Western Operations	EQUIPMENT DATA SHEET ☒ CDR ☐ TITLE I ☐ TITLE II ☐ TITLE III	ITEM NUMBER CV-08-301	PAGE 1 OF 1
CUSTOMER & LOCATION DOE-RL/WHC HANFORD, WA	PROJECT WRAP FACILITY MODULE 2A	UE&C JOB NO. 6237.006	DATE: 04/03/92
		ACCOUNT NO.	BY: JDC

REVISIONS (DATE & BY)	A		B		C		D	
	E		F		G		H	

SERVICE	MANUFACTURER	NO. REQ'D.	SOURCE OF QUOTE
DRUM AS/RS TRANSFER CONVEYOR		1	

CHAIN DRIVEN LIVE ROLLER CONVEYOR

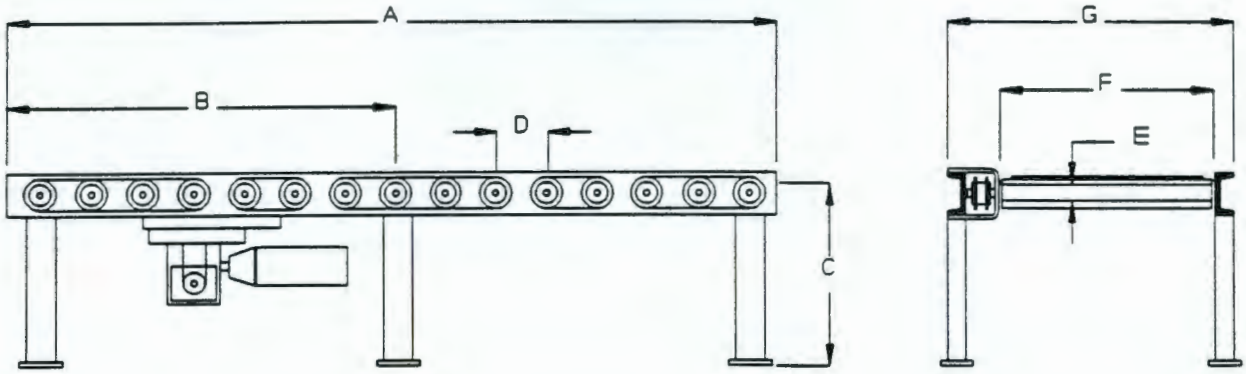

CONDITIONS OF SERVICE		DIMENSIONS	
APPLICATION: DRUM ACCUMULATION FOR AS/RS TRANSFER		A: 60"	E: 2.5"
UNIT LOAD DESCRIPTION: 55 GALLON WASTE DRUMS		B: 30"	F: 30"
UNIT LOAD SIZE: 22.5" DIA X 34.5" HIGH	SPEED: 35 FPM	C: 21"	G: 33"
UNIT LOAD WEIGHT: 1,000 LBS	DUTY: 8 HOURS/DAY	D: 4"	H:
IMPACT LOADING: MODERATE	CONVEYOR PITCH/SLOPE: N/A		
ACCESSORIES: DRUM PUSHER	NEC AREA CLASS: UNCLASSIFIED		
CONSTRUCTION			
FRAME MATL. (ASTM): A36	ROLLER MATL. (ASTM): A36		
LENGTH: 60"	ROLLER CAPACITY (Ea.):		
WIDTH (Inside): 30"	DRIVE CAPACITY: 6,050 LBS		
ACCUMULATION ZONE LENGTH: 30"	ROLLER SPACING: 4"		
NO. OF ACCUMULATION ZONES: 2	ROLLER O.D.: 2.5"		
LEG SPACING: 30"	ROLLER THICKNESS: 11 GAUGE		
MOTOR RATING: .75 HP	ROLLER RETENTION: PIN/SPRING		
REDUCER TYPE: RA WORM	BEARING TYPE: BALL BEARING		
MOTOR/REDUCER CONN.: DIRECT	NEMA RATING: 1		
DRIVE TYPE: ROLLER TO ROLLER	SHIPPING WT.: 617		
CHAIN TYPE: NO. 60 ROLLER CHAIN			

9413227.0454

UNITED ENGINEERS & CONSTRUCTORS A Raytheon Company Western Operations	EQUIPMENT DATA SHEET ☒ CDR ☐ TITLE I ☐ TITLE II ☐ TITLE III	ITEM NUMBER CV-08-302	PAGE 1 OF 1
CUSTOMER & LOCATION DOE-RL/WHC HANFORD, WA	PROJECT WRAP FACILITY MODULE 2A	UE&C JOB NO. 6237.006 / ACCOUNT NO.	DATE: 04/03/92 / BY: JDC

REVISIONS (DATE & BY)	A		B		C		D	
	E		F		G		H	

SERVICE	MANUFACTURER	NO. REQ'D.	SOURCE OF QUOTE
DRUM AS/RS TRANSFER CONVEYOR		1	

CHAIN DRIVEN LIVE ROLLER CONVEYOR

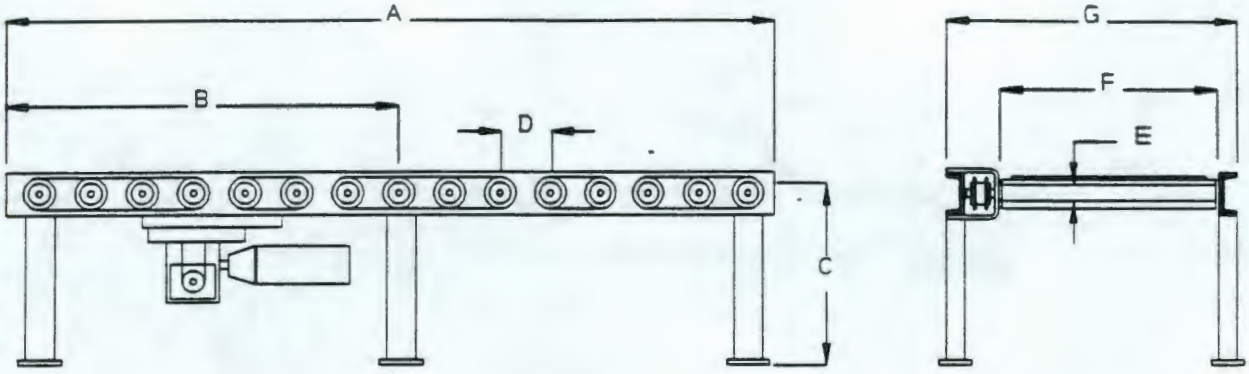

CONDITIONS OF SERVICE		DIMENSIONS	
APPLICATION: DRUM ACCUMULATION FOR AS/RS TRANSFER		A: 60"	E: 2.5"
UNIT LOAD DESCRIPTION: 55 GALLON WASTE DRUMS		B: 30"	F: 30"
UNIT LOAD SIZE: 22.5" DIA X 34.5" HIGH	SPEED: 35 FPM	C: 21"	G: 33"
UNIT LOAD WEIGHT: 1,000 LBS	DUTY: 8 HOURS/DAY	D: 4"	H:
IMPACT LOADING: MODERATE	CONVEYOR PITCH/SLOPE: N/A		
	NEC AREA CLASS: UNCLASSIFIED		
CONSTRUCTION			
FRAME MATL. (ASTM): A36	ROLLER MATL. (ASTM): A36		
LENGTH: 60"	ROLLER CAPACITY (Ea.):		
WIDTH (Inside): 30"	DRIVE CAPACITY: 6,050 LBS		
ACCUMULATION ZONE LENGTH: 30"	ROLLER SPACING: 4"		
NO. OF ACCUMULATION ZONES: 2	ROLLER O.D.: 2.5"		
LEG SPACING: 30"	ROLLER THICKNESS: 11 GAUGE		
MOTOR RATING: .75 HP	ROLLER RETENTION: PIN/SPRING		
REDUCER TYPE: RA WORM	BEARING TYPE: BALL BEARING		
MOTOR/REDUCER CONN.: DIRECT	NEMA RATING: 1		
DRIVE TYPE: ROLLER TO ROLLER	SHIPPING WT.: 617		
CHAIN TYPE: NO. 60 ROLLER CHAIN			

UNITED ENGINEERS & CONSTRUCTORS A Raytheon Company Western Operations	EQUIPMENT DATA SHEET ☒ CDR ☐ TITLE I ☐ TITLE II ☐ TITLE III	ITEM NUMBER CV-08-303	PAGE 1 OF 1
CUSTOMER & LOCATION DOE-RL/WHC HANFORD, WA	PROJECT WRAP FACILITY MODULE 2A	UE&C JOB NO. 6237.006	DATE: 05/18/92
		ACCOUNT NO.	BY: JDC

REVISIONS (DATE & BY)	A		B		C		D	
	E		F		G		H	

SERVICE	MANUFACTURER	NO. REQ'D.	SOURCE OF QUOTE
SLAVE PALLET TRANSFER CONVEYOR		1	

CHAIN DRIVEN LIVE ROLLER CONVEYOR

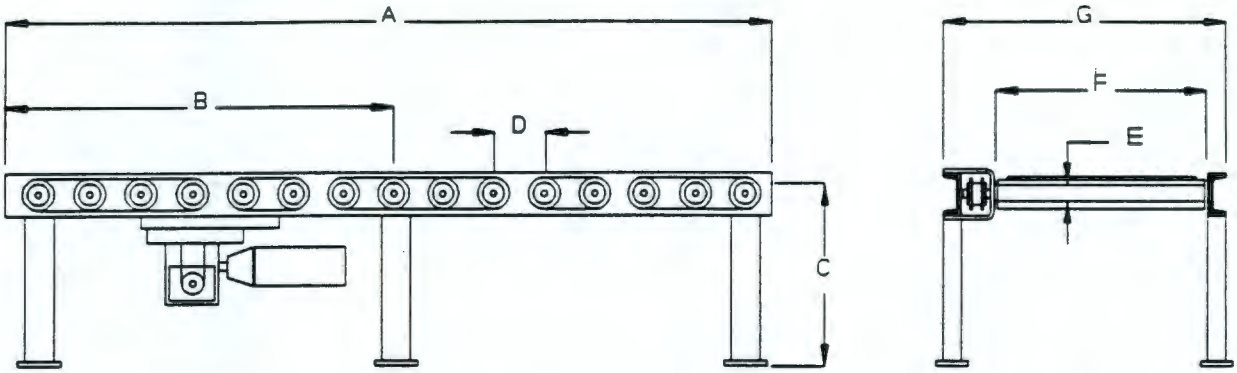

CONDITIONS OF SERVICE		DIMENSIONS	
APPLICATION: SLAVE PALLET TRANSFERS BETWEEN CONVEYORS		A: 60"	E: 2.5"
UNIT LOAD DESCRIPTION: SLAVE PALLET		B: 30"	F: 36"
UNIT LOAD SIZE: 3' X 3' X 1"	SPEED: 35 FPM	C: 21"	G: 39"
UNIT LOAD WEIGHT: 100 LBS	DUTY: 8 HOURS/DAY	D: 4"	H:
IMPACT LOADING:	CONVEYOR PITCH/SLOPE: N/A		
ACCESSORIES: 2-90° CHAIN TRANSFER DEVICES	NEC AREA CLASS: UNCLASSIFIED		
CONSTRUCTION			
FRAME MATL. (ASTM): A36	ROLLER MATL. (ASTM): A36		
LENGTH: 5'-0"	ROLLER CAPACITY (Ea.):		
WIDTH (Inside): 36"	DRIVE CAPACITY: 6,050 LBS		
ACCUMULATION ZONE LENGTH: 30"	ROLLER SPACING: 4"		
NO. OF ACCUMULATION ZONES: 2	ROLLER O.D.: 2.5"		
LEG SPACING: 30"	ROLLER THICKNESS: 11 GAUGE		
MOTOR RATING: .75 HP	ROLLER RETENTION: PIN/SPRING		
REDUCER TYPE: RA WORM	BEARING TYPE: BALL BEARING		
MOTOR/REDUCER CONN.: DIRECT	NEMA RATING: 1		
DRIVE TYPE: ROLLER TO ROLLER	SHIPPING WT.: 617		
CHAIN TYPE: NO. 60 ROLLER CHAIN			

9413227.0456

UNITED ENGINEERS & CONSTRUCTORS A Raytheon Company Western Operations	EQUIPMENT DATA SHEET ☒ CDR ☐ TITLE I ☐ TITLE II ☐ TITLE III	ITEM NUMBER CV-08-501	PAGE 1 OF 1

CUSTOMER & LOCATION	PROJECT	UE&C JOB NO. 6237.006	DATE: 04/03/92
DOE-RL/WHC HANFORD, WA	WRAP FACILITY MODULE 2A	ACCOUNT NO.	BY: JDC

REVISIONS (DATE & BY)	A		B		C		D	
	E		F		G		H	

SERVICE	MANUFACTURER	NO. REQ'D.	SOURCE OF QUOTE
DRUM RECEIVER/SHIP TRANSFER CONVEYOR		1	

CHAIN DRIVEN LIVE ROLLER CONVEYOR

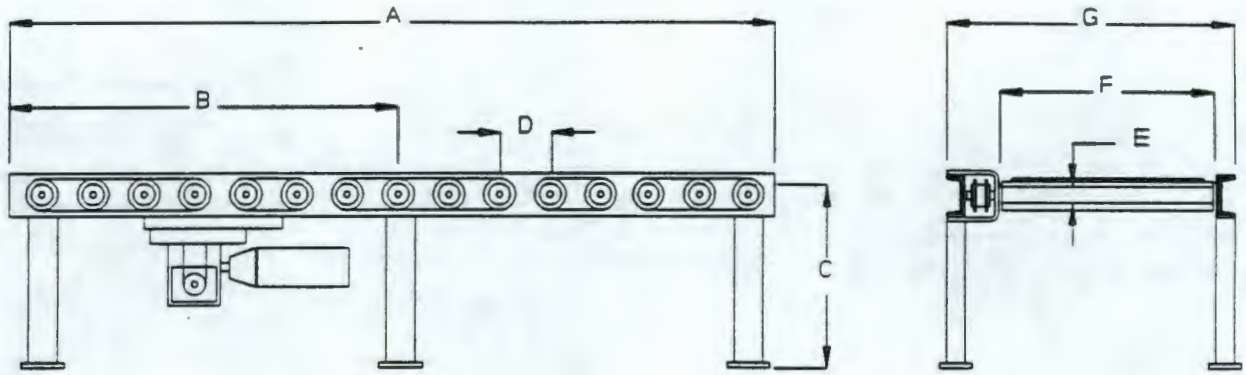

CONDITIONS OF SERVICE		DIMENSIONS	
APPLICATION: DRUM TRANSFERS BETWEEN RECEIVING AND SHIPPING		A: 60"	E: 2.5"
UNIT LOAD DESCRIPTION: 55 GALLON WASTE DRUMS		B: 30"	F: 30"
UNIT LOAD SIZE: 22.5" DIA X 34.5" HIGH	SPEED: 35 FPM	C: 21"	G: 33"
UNIT LOAD WEIGHT: 1,000 LBS	DUTY: 8 HOURS/DAY	D: 4"	H:
IMPACT LOADING: MODERATE	CONVEYOR PITCH/SLOPE: N/A		
	NEC AREA CLASS: UNCLASSIFED		
CONSTRUCTION			
FRAME MATL. (ASTM): A36	ROLLER MATL. (ASTM): A36		
LENGTH: 60"	ROLLER CAPACITY (Ea.):		
WIDTH (Inside): 30"	DRIVE CAPACITY: 6,050 LBS		
ACCUMULATION ZONE LENGTH: 30"	ROLLER SPACING: 4"		
NO. OF ACCUMULATION ZONES: 2	ROLLER O.D.: 2.5"		
LEG SPACING: 30"	ROLLER THICKNESS: 11 GAGE		
MOTOR RATING: .75 HP	ROLLER RETENTION: PIN/SPRING		
REDUCER TYPE: RA WORM	BEARING TYPE: BALL BEARING		
MOTOR/REDUCER CONN.: DIRECT	NEMA RATING: 1		
DRIVE TYPE: ROLLER TO ROLLER	SHIPPING WT.: 617 LBS		
CHAIN TYPE: NO. 60 ROLLER CHAIN			

UNITED ENGINEERS & CONSTRUCTORS A Raytheon Company Western Operations	EQUIPMENT DATA SHEET ☒ CDR ☐ TITLE I ☐ TITLE II ☐ TITLE III	ITEM NUMBER CV-08-502	PAGE 1 OF 1
CUSTOMER & LOCATION DOE-RL/WHC HANFORD, WA	PROJECT WRAP FACILITY MODULE 2A	UE&C JOB NO. 6237.006	DATE: 04/03/92
		ACCOUNT NO.	BY: JDC

REVISIONS (DATE & BY)	A		B		C		D	
	E		F		G		H	

SERVICE	MANUFACTURER	NO. REQ'D.	SOURCE OF QUOTE
DRUM RECEIVE/SHIP TRANSFER CONVEYOR		1	

CHAIN DRIVEN LIVE ROLLER CONVEYOR

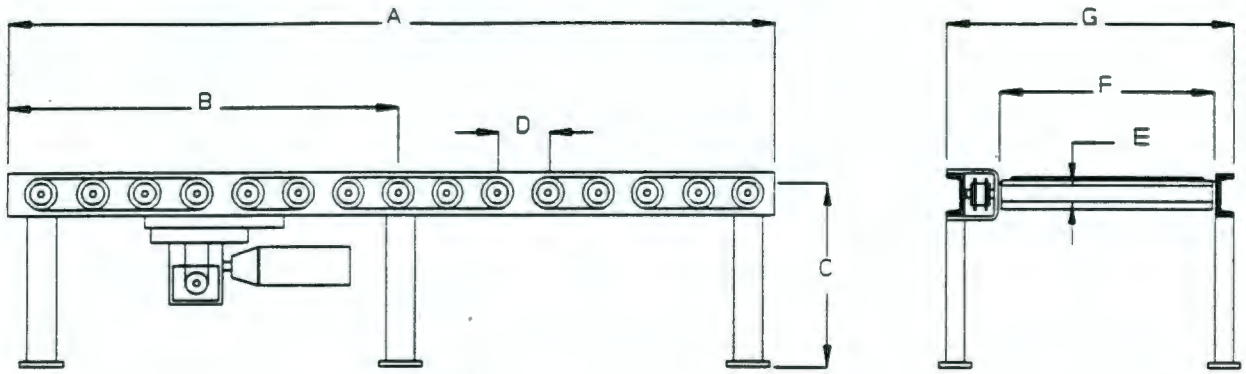

CONDITIONS OF SERVICE		DIMENSIONS	
APPLICATION: DRUM TRANSFERS BETWEEN RECEIVING AND SHIPPING		A: 60"	E: 2.5"
UNIT LOAD DESCRIPTION: 55 GALLON WASTE DRUMS		B: 30"	F: 30"
UNIT LOAD SIZE: 22.5" DIA X 34.5" HIGH	SPEED: 35 FPM	C: 21"	G: 33"
UNIT LOAD WEIGHT: 1,000 LBS	DUTY: 8 HOURS/DAY	D: 4"	H:
IMPACT LOADING: MODERATE	CONVEYOR PITCH/SLOPE: N/A		
	NEC AREA CLASS: UNCLASSIFIED		
CONSTRUCTION			
FRAME MATL. (ASTM): A36	ROLLER MATL. (ASTM): A36		
LENGTH: 5'-0"	ROLLER CAPACITY (Ea.):		
WIDTH (Inside): 30"	DRIVE CAPACITY: 6,050 LBS		
ACCUMULATION ZONE LENGTH: 30"	ROLLER SPACING: 4"		
NO. OF ACCUMULATION ZONES: 2	ROLLER O.D.: 2.5"		
LEG SPACING: 30"	ROLLER THICKNESS: 11 GAGE		
MOTOR RATING: .75 HP	ROLLER RETENTION: PIN/SPRING		
REDUCER TYPE: RA WORM	BEARING TYPE: BALL BEARING		
MOTOR/REDUCER CONN.: DIRECT	NEMA RATING: 1		
DRIVE TYPE: ROLLER TO ROLLER	SHIPPING WT.: 617 LBS		
CHAIN TYPE: NO. 60 ROLLER CHAIN			

9413227.0458

UNITED ENGINEERS & CONSTRUCTORS A Raytheon Company Western Operations	EQUIPMENT DATA SHEET ☒ CDR ☐ TITLE I ☐ TITLE II ☐ TITLE III	ITEM NUMBER CV-08-503	PAGE 1 OF 1
CUSTOMER & LOCATION DOE-RL/WHC HANFORD, WA	PROJECT WRAP FACILITY MODULE 2A	UE&C JOB NO. 6237.006	DATE: 04/03/92
		ACCOUNT NO.	BY: JDC

REVISIONS (DATE & BY)	A		B		C		D	
	E		F		G		H	

SERVICE	MANUFACTURER	NO. REQ'D.	SOURCE OF QUOTE
DRUM RECEIVE/SHIP TRANSFER CONVEYOR		1	

CHAIN DRIVEN LIVE ROLLER CONVEYOR

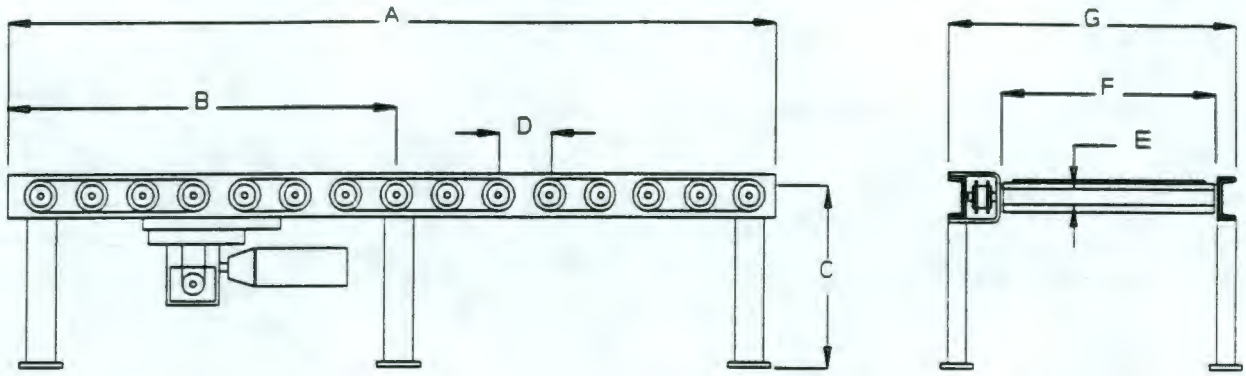

CONDITIONS OF SERVICE		DIMENSIONS	
APPLICATION: DRUM TRANSFERS BETWEEN RECEIVING AND SHIPPING		A: 60"	E: 2.5"
UNIT LOAD DESCRIPTION: 55 GALLON WASTE DRUMS		B: 30"	F: 30"
UNIT LOAD SIZE: 22.5" DIA X 34.5" HIGH	SPEED: 35 FPM	C: 21"	G: 33"
UNIT LOAD WEIGHT: 1,000 LBS	DUTY: 8 HOURS/DAY	D: 4"	H:
IMPACT LOADING: MODERATE	CONVEYOR PITCH/SLOPE: N/A		
	NEC AREA CLASS: UNCLASSIFIED		

CONSTRUCTION			
FRAME MATL. (ASTM): A36	ROLLER MATL. (ASTM): A36		
LENGTH: 60"	ROLLER CAPACITY (Ea.):		
WIDTH (Inside): 30"	DRIVE CAPACITY: 6,050 LBS		
ACCUMULATION ZONE LENGTH: 30"	ROLLER SPACING: 4"		
NO. OF ACCUMULATION ZONES: 2	ROLLER O.D.: 2.5"		
LEG SPACING: 30"	ROLLER THICKNESS: 11 GAGE		
MOTOR RATING: .75 HP	ROLLER RETENTION: PIN/SPRING		
REDUCER TYPE: RA WORM	BEARING TYPE: BALL BEARING		
MOTOR/REDUCER CONN.: DIRECT	NEMA RATING: 1		
DRIVE TYPE: ROLLER TO ROLLER	SHIPPING WT.: 617 LBS		
CHAIN TYPE: NO. 60 ROLLER CHAIN			

UNITED ENGINEERS & CONSTRUCTORS A Raytheon Company Western Operations	EQUIPMENT DATA SHEET ☒ CDR ☐ TITLE I ☐ TITLE II ☐ TITLE III	ITEM NUMBER CV-08-504	PAGE 1 OF 1
CUSTOMER & LOCATION DOE-RL/WHC HANFORD, WA	PROJECT WRAP FACILITY MODULE 2A	UE&C JOB NO. 6237.006	DATE: 04/03/92
		ACCOUNT NO.	BY: JDC

REVISIONS (DATE & BY)	A		B		C		D	
	E		F		G		H	

ERVICE DRUM RECEIVE/SHIP TRANSFER CONVEYOR	MANUFACTURER	NO. REQ'D. 1	SOURCE OF QUOTE

CHAIN DRIVEN LIVE ROLLER CONVEYOR

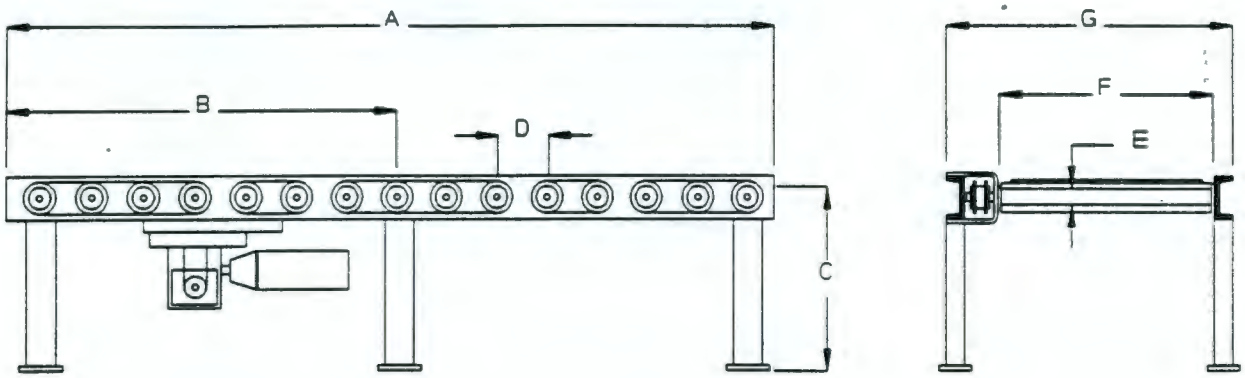

CONDITIONS OF SERVICE		DIMENSIONS	
APPLICATION: DRUM TRANSFERS BETWEEN RECEIVING AND SHIPPING		A: 60"	E: 2.5"
UNIT LOAD DESCRIPTION: 55 GALLON WASTE DRUMS		B: 30"	F: 30"
UNIT LOAD SIZE: 22.5" DIA X 34.5" HIGH	SPEED: 35 FPM	C: 21"	G: 33"
UNIT LOAD WEIGHT: 1,000 LBS	DUTY: 8 HOURS/DAY	D: 4"	H:
IMPACT LOADING: MODERATE	CONVEYOR PITCH/SLOPE: N/A		
	NEC AREA CLASS: UNCLASSIFIED		

CONSTRUCTION			
FRAME MATL. (ASTM): A36	ROLLER MATL. (ASTM): A36		
LENGTH: 60"	ROLLER CAPACITY (Ea.):		
WIDTH (Inside): 30"	DRIVE CAPACITY: 6,050 LBS		
ACCUMULATION ZONE LENGTH: 30"	ROLLER SPACING: 4"		
NO. OF ACCUMULATION ZONES: 2	ROLLER O.D.: 2.5"		
LEG SPACING: 30"	ROLLER THICKNESS: 11 GAGE		
MOTOR RATING: .75 HP	ROLLER RETENTION: PIN/SPRING		
REDUCER TYPE: RA WORM	BEARING TYPE: BALL BEARING		
MOTOR/REDUCER CONN.: DIRECT	NEMA RATING: 1		
DRIVE TYPE: ROLLER TO ROLLER	SHIPPING WT.: 617 LBS		
CHAIN TYPE: NO. 60 ROLLER CHAIN			

9413227.0460

UNITED ENGINEERS & CONSTRUCTORS A Raytheon Company Western Operations	EQUIPMENT DATA SHEET ☒ CDR ☐ TITLE I ☐ TITLE II ☐ TITLE III	ITEM NUMBER CV-09-101	PAGE 1 OF 1
CUSTOMER & LOCATION DOE-RL/WHC HANFORD, WA	PROJECT WRAP FACILITY MODULE 2A	UE&C JOB NO. 6237.006	DATE: 04/03/92
		ACCOUNT NO.	BY: JDC

REVISIONS (DATE & BY)	A		B		C		D	
	E		F		G		H	

SERVICE	MANUFACTURER	NO. REQ'D.	SOURCE OF QUOTE
PALLET ACCUMULATION CONVEYOR		1	

GRAVITY ROLLER CONVEYOR

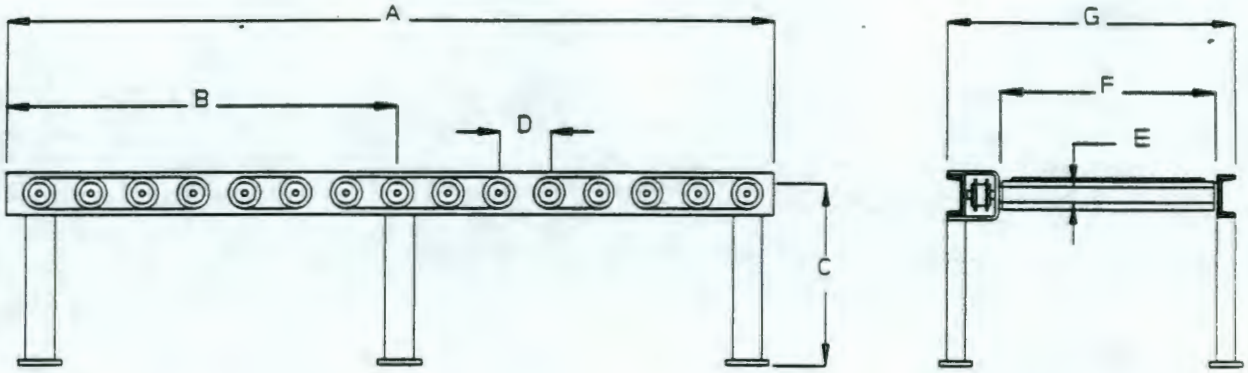

CONDITIONS OF SERVICE		DIMENSIONS	
APPLICATION: PALLET ACCUMULATION		A: 30'-0"	E: 3"
UNIT LOAD DESCRIPTION: 55 AND 83 GALLON WASTE DRUMS ON PALLETS		B: 60"	F: 60"
UNIT LOAD SIZE: 56" X 56"	SPEED: N/A	C: 21"	G: 63"
UNIT LOAD WEIGHT: 12,000 LBS	DUTY: 8 HOURS/DAY	D: 4"	H:
IMPACT LOADING: MODERATE	CONVEYOR PITCH/SLOPE: 0.4 IN/FT		
	NEC AREA CLASS:		
CONSTRUCTION			
FRAME MATL. (ASTM): A36	WHEEL MATL. (ASTM): ELASTOMER TIRE		
LENGTH: 30'-0"	WHEEL CAPACITY (Ea.):		
WIDTH (Inside): 60"	DRIVE CAPACITY: N/A		
ACCUMULATION ZONE LENGTH: N/A	WHEEL SPACING: 1.5"		
NO. OF ACCUMULATION ZONES: N/A	WHEEL O.D.: 3"		
LEG SPACING:	ROLLER THICKNESS:		
MOTOR RATING: N/A	ROLLER RETENTION:		
REDUCER TYPE: N/A	BEARING TYPE:		
MOTOR/REDUCER CONN.: N/A	NEMA RATING:		
DRIVE TYPE: N/A	SHIPPING WT.: 2,380 LBS		
CHAIN TYPE: N/A			

UNITED ENGINEERS & CONSTRUCTORS A Raytheon Company Western Operations	EQUIPMENT DATA SHEET ☒ CDR ☐ TITLE I ☐ TITLE II ☐ TITLE III	ITEM NUMBER CV-09-102	PAGE 1 OF 1
CUSTOMER & LOCATION DOE-RL/WHC HANFORD, WA	PROJECT WRAP FACILITY MODULE 2A	UE&C JOB NO. 6237.006	DATE: 04/3/92
		ACCOUNT NO.	BY: JDC

REVISIONS (DATE & BY)	A		B		C		D	
	E		F		G		H	

SERVICE	MANUFACTURER	NO. REQ'D.	SOURCE OF QUOTE
DRUM FEED CONVEYOR		1	

CHAIN DRIVEN LIVE ROLLER CONVEYOR

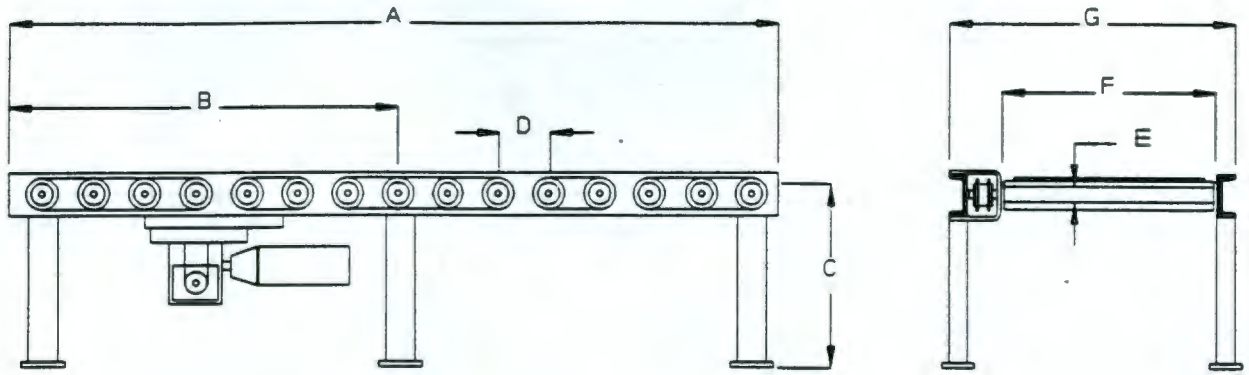

CONDITIONS OF SERVICE		DIMENSIONS	
APPLICATION: DRUM ACCUMULATION FOR WASTE PROCESSING		A: 72"	E: 2.5
UNIT LOAD DESCRIPTION: 55 AND 83 GALLON WASTE DRUMS		B: 36"	F: 30"
UNIT LOAD SIZE: 26" DIA X 39" HIGH	SPEED: 35 FPM	C: 21"	G: 33"
UNIT LOAD WEIGHT: 3,000 LBS	DUTY: 8 HOURS/DAY	D: 4"	H:
IMPACT LOADING: MODERATE	CONVEYOR PITCH/SLOPE: N/A		
	NEC AREA CLASS:		
CONSTRUCTION			
FRAME MATL. (ASTM): A36	ROLLER MATL. (ASTM): A36		
LENGTH: 72"	ROLLER CAPACITY (Ea.):		
WIDTH (Inside): 30"	DRIVE CAPACITY:		
ACCUMULATION ZONE LENGTH: 36"	ROLLER SPACING: 4"		
NO. OF ACCUMULATION ZONES: 2	ROLLER O.D.: 2.5"		
LEG SPACING: 36"	ROLLER THICKNESS: 11 GAGE		
MOTOR RATING: .75 HP	ROLLER RETENTION: PIN/SPRING		
REDUCER TYPE: RA WORM	BEARING TYPE: BALL BEARING		
MOTOR/REDUCER CONN.: DIRECT	NEMA RATING: 1		
DRIVE TYPE: ROLLER TO ROLLER	SHIPPING WT.: 600 LBS		
CHAIN TYPE: NO. 60 ROLLER CHAIN			

9413227.0462

UNITED ENGINEERS & CONSTRUCTORS A Raytheon Company Western Operations	EQUIPMENT DATA SHEET ☒ CDR ☐ TITLE I ☐ TITLE II ☐ TITLE III	ITEM NUMBER CV-09-103	PAGE 1 OF 1
CUSTOMER & LOCATION DOE-RL/WHC HANFORD, WA	PROJECT WRAP FACILITY MODULE 2A	UE&C JOB NO. 6237.006 / ACCOUNT NO.	DATE: 04/03/92 / BY: JDC

REVISIONS (DATE & BY)	A		B		C		D	
	E		F		G		H	

SERVICE	MANUFACTURER	NO. REQ'D.	SOURCE OF QUOTE
NEW DRUM FEED CONVEYOR		1	

CHAIN DRIVEN LIVE ROLLER CONVEYOR

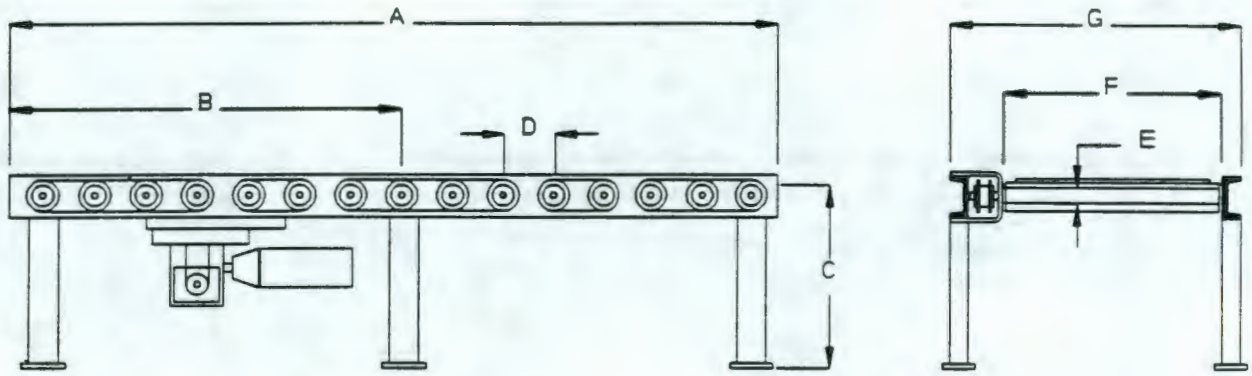

CONDITIONS OF SERVICE		DIMENSIONS	
APPLICATION: NEW DRUM ACCUMULATION FOR PROCESSING AREAS		A: 30'-0"	E: 2.5"
UNIT LOAD DESCRIPTION: NEW 55 GALLON DRUMS		B: 60"	F: 30"
UNIT LOAD SIZE: 22.5" DIA X 34.5" HIGH	SPEED: 35 FPM	C: 21"	G: 33"
UNIT LOAD WEIGHT: 100 LBS	DUTY: 8 HOURS/DAY	D: 4"	H:
IMPACT LOADING: LIGHT	CONVEYOR PITCH/SLOPE: N/A		
	NEC AREA CLASS:		

CONSTRUCTION			
FRAME MATL. (ASTM): A36	ROLLER MATL. (ASTM): A36		
LENGTH: 30'-0" W/90° CHAIN TRANSFER	ROLLER CAPACITY (Ea.):		
WIDTH (Inside): 30"	DRIVE CAPACITY:		
ACCUMULATION ZONE LENGTH: 30"	ROLLER SPACING: 4"		
NO. OF ACCUMULATION ZONES: 8	ROLLER O.D.: 2.5"		
LEG SPACING: 60"	ROLLER THICKNESS: 11 GAUGE		
MOTOR RATING: 1.5 HP / .75 HP	ROLLER RETENTION: PIN/SPRING		
REDUCER TYPE: RA WARM	BEARING TYPE: BALL BEARING		
MOTOR/REDUCER CONN.: DIRECT	NEMA RATING: 1		
DRIVE TYPE: ROLLER TO ROLLER	SHIPPING WT.: 2,700 LBS		
CHAIN TYPE: NO. 60 ROLLER CHAIN			

UNITED ENGINEERS & CONSTRUCTORS A Raytheon Company Western Operations	EQUIPMENT DATA SHEET ☒ CDR ☐ TITLE I ☐ TITLE II ☐ TITLE III	ITEM NUMBER CV-09-104	PAGE 1 OF 1
CUSTOMER & LOCATION DOE-RL/WHC HANFORD, WA	PROJECT WRAP FACILITY MODULE 2A	UE&C JOB NO. 6237.006	DATE: 04/3/92
		ACCOUNT NO.	BY: JDC

REVISIONS (DATE & BY)	A		B		C		D	
	E		F		G		H	

SERVICE	MANUFACTURER	NO. REQ'D.	SOURCE OF QUOTE
DRUM DISCHARGE CONVEYOR		1	

CHAIN DRIVEN LIVE ROLLER CONVEYOR

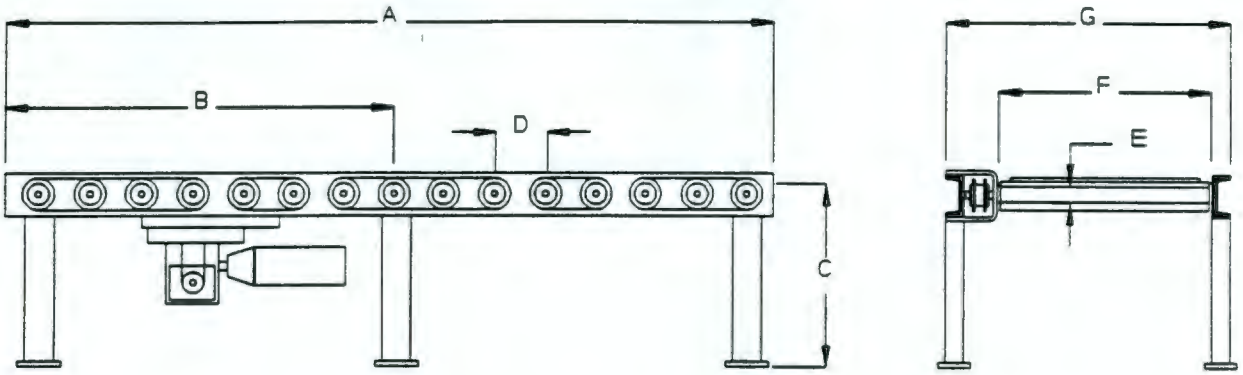

CONDITIONS OF SERVICE		DIMENSIONS	
APPLICATION: DRUM ACCUMULATION FOR SHIPMENT PREPARATION		A: 24'-0"	E: 2.5"
UNIT LOAD DESCRIPTION: 55 GALLON WASTE DRUMS		B: 5'	F: 30"
UNIT LOAD SIZE: 22.5" DIA X 34.5" HIGH	SPEED: 35 FPM	C: 21"	G: 33"
UNIT LOAD WEIGHT: 1,000 LBS	DUTY: 8 HOURS/DAY	D: 4"	H:
IMPACT LOADING: MODERATE	CONVEYOR PITCH/SLOPE: N/A		
	NEC AREA CLASS: UNCLASSIFIED		
CONSTRUCTION			
FRAME MATL. (ASTM): A36	ROLLER MATL. (ASTM): A36		
LENGTH: 24'-0"	ROLLER CAPACITY (Ea.):		
WIDTH (Inside): 30"	DRIVE CAPACITY:		
ACCUMULATION ZONE LENGTH: 36"	ROLLER SPACING: 4"		
NO. OF ACCUMULATION ZONES: 8	ROLLER O.D.: 2.5"		
LEG SPACING: 60"	ROLLER THICKNESS: 11 GAGE		
MOTOR RATING: 1.5 HP	ROLLER RETENTION: PIN/SPRING		
REDUCER TYPE: RA WORM	BEARING TYPE: BALL BEARING		
MOTOR/REDUCER CONN.: DIRECT	NEMA RATING: 1		
DRIVE TYPE: ROLLER TO ROLLER	SHIPPING WT.: 2,100 LBS		
CHAIN TYPE: NO. 60 ROLLER CHAIN			

9413227.0464

UNITED ENGINEERS & CONSTRUCTORS A Raytheon Company Western Operations	EQUIPMENT DATA SHEET ☒ CDR ☐ TITLE I ☐ TITLE II ☐ TITLE III	ITEM NUMBER CV-09-106	PAGE 1 OF 1
CUSTOMER & LOCATION DOE-RL/WHC HANFORD, WA	PROJECT WRAP FACILITY MODULE 2A	UE&C JOB NO. 6237.006	DATE: 04/03/92
		ACCOUNT NO.	BY: JDC

REVISIONS (DATE & BY)	A		B		C		D	
	E		F		G		H	

SERVICE	MANUFACTURER	NO. REQ'D.	SOURCE OF QUOTE
DRUM/SCALE CONVEYOR		1	

CHAIN DRIVEN LIVE ROLLER CONVEYOR

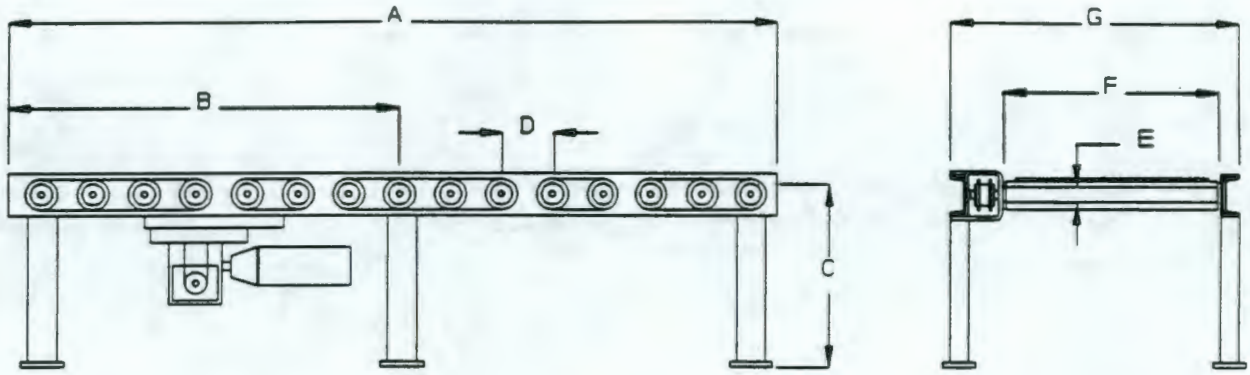

CONDITIONS OF SERVICE		DIMENSIONS	
APPLICATION: INCOMING DRUM WEIGHING SCALE		A: 36"	E: 2.5"
UNIT LOAD DESCRIPTION: 55 AND 83 GALLON WASTE DRUMS		B: N/A	F: 30"
UNIT LOAD SIZE: 26" DIA X 39" HIGH	SPEED: 35 FPM	C: 21"	G: 33"
UNIT LOAD WEIGHT: 3,000 LBS	DUTY: 8 HOURS/DAY	D: 4"	H:
IMPACT LOADING: LIGHT	CONVEYOR PITCH/SLOPE: N/A		
ACCESSORIES: LOAD CELL (SCALE)	NEC AREA CLASS: UNCLASSIFIED		

CONSTRUCTION			
FRAME MATL. (ASTM): A36	ROLLER MATL. (ASTM): A36		
LENGTH: 36"	ROLLER CAPACITY (Ea.):		
WIDTH (Inside): 30"	DRIVE CAPACITY:		
ACCUMULATION ZONE LENGTH: N/A	ROLLER SPACING: 4"		
NO. OF ACCUMULATION ZONES: N/A	ROLLER O.D.: 2.5"		
LEG SPACING: 36"	ROLLER THICKNESS: 11 GAGE		
MOTOR RATING: .75 HP	ROLLER RETENTION: PIN/SPRING		
REDUCER TYPE: RA WORM	BEARING TYPE: BALL BEARING		
MOTOR/REDUCER CONN.: DIRECT	NEMA RATING: 1		
DRIVE TYPE: ROLLER TO ROLLER	SHIPPING WT.: 374 LBS		
CHAIN TYPE: NO. 60 ROLLER CHAIN			

UNITED ENGINEERS & CONSTRUCTORS A Raytheon Company Western Operations	EQUIPMENT DATA SHEET ☒ CDR ☐ TITLE I ☐ TITLE II ☐ TITLE III	ITEM NUMBER CV-09-106	PAGE 1 OF 1
CUSTOMER & LOCATION DOE-RL/WHC HANFORD, WA	PROJECT WRAP FACILITY MODULE 2A	UE&C JOB NO. 6237.006	DATE: 04/03/92
		ACCOUNT NO.	BY: JDC

REVISIONS (DATE & BY)	A		B		C		D	
	E		F		G		H	

SERVICE	MANUFACTURER	NO. REQ'D.	SOURCE OF QUOTE
DRUM/SCALE CONVEYOR		1	

CHAIN DRIVEN LIVE ROLLER CONVEYOR

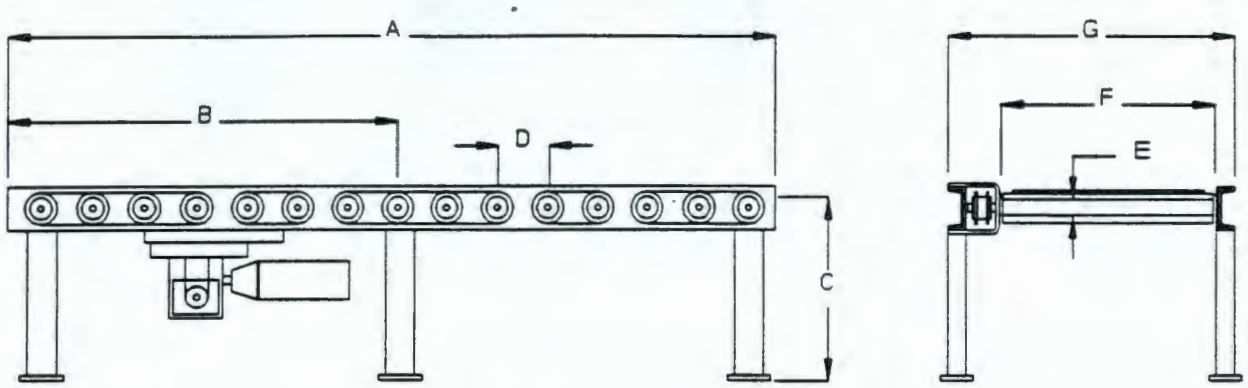

CONDITIONS OF SERVICE		DIMENSIONS	
APPLICATION: OUTGOING DRUM WEIGHING SCALE		A: 36"	E: 2.5"
UNIT LOAD DESCRIPTION: 55 AND 83 GALLON WASTE DRUMS		B: N/A	F: 30"
UNIT LOAD SIZE: 22.5" DIA X 34.5" HIGH	SPEED: 35 FPM	C: 21"	G: 33"
UNIT LOAD WEIGHT: 1,000 LBS	DUTY: 8 HOURS/DAY	D: 4"	H:
IMPACT LOADING: LIGHT	CONVEYOR PITCH/SLOPE: N/A		
	NEC AREA CLASS:		

CONSTRUCTION			
FRAME MATL. (ASTM): A36	ROLLER MATL. (ASTM): A36		
LENGTH: 36"	ROLLER CAPACITY (Ea.):		
WIDTH (Inside): 30"	DRIVE CAPACITY:		
ACCUMULATION ZONE LENGTH: N/A	ROLLER SPACING: 4"		
NO. OF ACCUMULATION ZONES: N/A	ROLLER O.D.: 2.5"		
LEG SPACING: 36"	ROLLER THICKNESS: 11 GAGE		
MOTOR RATING: .75 HP	ROLLER RETENTION: PIN/SPRING		
REDUCER TYPE: RA WORM	BEARING TYPE: BALL BEARING		
MOTOR/REDUCER CONN.: DIRECT	NEMA RATING: 1		
DRIVE TYPE: ROLLER TO ROLLER	SHIPPING WT.: 374 LBS		
CHAIN TYPE: NO. 60 ROLLER CHAIN			

9413227.0466

UNITED ENGINEERS & CONSTRUCTORS
A Raytheon Company
Western Operations

CUSTOMER: DOE-RL/WHC
PROJECT: WRAP FACILITY MODULE 2A
LOCATION: HANFORD, WA

ITEM NO.: S-06-301
ACCT.:
UE&C JOB: 6237.006
PAGE: 1 OF 1
DATE: 04/21/92 BY: RLH

SERVICE: VIBRATING SCREEN
NO. REQ'D.: 1
REVISIONS: A BY B BY C BY D BY
MANUFACTURER: MODEL: SIZE: TYPE:
SOURCE: QUOTATION NO.: DATE:

CONDITIONS OF SERVICE

PROCESS FLOW:	ZIRCONIUM AND BERRYLIUM FINES
FLOW CAPACITY:	168 LBS/DAY
SCREEN SIZE:	48 MESH
OPERATING TEMPERATURE:	60°F
OPERATING PRESSURE:	1 ATM
SCREEN TYPE:	VIBRATING ELECTRIC MOTOR OPERATED
MOTOR TYPE:	EXPLOSION PROOF

9413227.0967

UNITED ENGINEERS & CONSTRUCTORS A Raytheon Company Western Operations	EQUIPMENT DATA SHEET ☒ CDR ☐ TITLE I ☐ TITLE II ☐ TITLE III	ITEM NUMBER S-06-301	PAGE 1 OF 1

CUSTOMER & LOCATION	PROJECT	UE&C JOB NO. 6237.006	DATE: 04/24/92
DOE-RL/WHC HANFORD, WA	WRAP FACILITY MODULE 2A	ACCOUNT NO.	BY: GBD

REVISIONS (DATE & BY)	A		B		C		D	
	E		F		G		H	

SERVICE	MANUFACTURER	NO. REQ'D.	SOURCE OF QUOTE
REACTIVE METALS SCREEN		1	

VIBRATING SCREEN

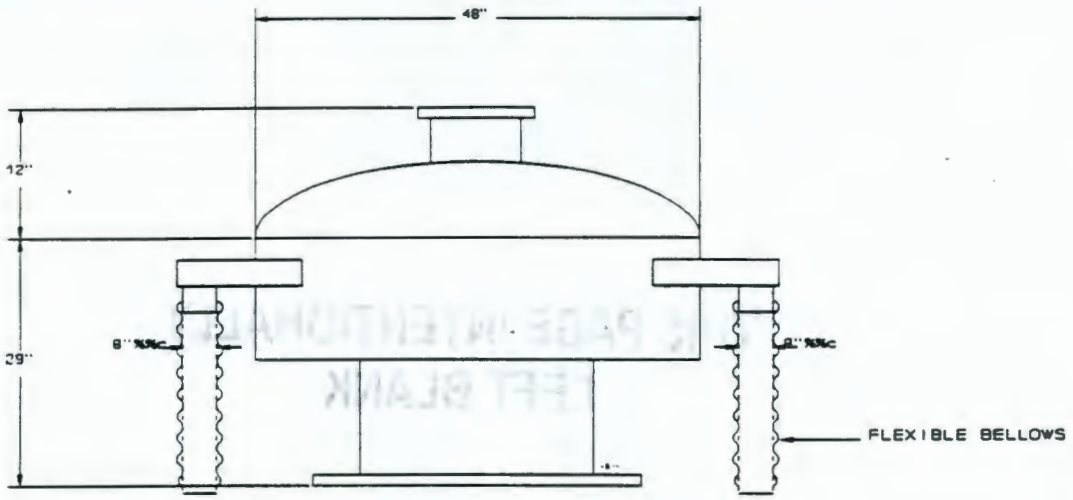

CONDITIONS OF SERVICE		DIMENSIONS	
APPLICATION: GRADING OF REACTIVE METAL WASTE		A:	F:
UNIT LOAD DESCRIPTION: ZIRCONIUM AND BERRYLIUM FINES		B:	G:
FLOW RATE (AVERAGE): 168 LBS/DAY	FLOW RATE: 1,000 LBS/DAY	C:	H:
OPERATING TEMP: 60°F		D:	I:
OPERATING PRESS: 1 ATM		E:	J:
CONSTRUCTION			
CONSTRUCTION MATERIAL: 304 SS	INLET: ENCLOSED SCREEN W/INLET BRANCH		
SCREEEN SIZE: 48 MESH	OUTLET: FLEXIBLE BELLOWS		
MOTOR RATING: 2.5 HP	WEIGHT: 659 LBS		
AVAILABLE ELECT --V/PH/HZ: 460/3/60			
NEMA ENCLOSURE:			
MOTOR TYPE: EXPLOSION PROOF			

9413227.0468

THIS PAGE INTENTIONALLY
LEFT BLANK

SECTION 14551

944 3227.0469

THIS PAGE INTENTIONALLY
LEFT BLANK

THIS PAGE INTENTIONALLY
LEFT BLANK

WRAP MODULE 2A

SPECIFICATION SECTION
FOR
14551 GROUT STABILIZATION CONVEYING SYSTEM

TABLE OF CONTENTS

PART 1 GENERAL

1.01 SECTION SCOPE
1.02 RELATED SECTIONS
1.03 REFERENCES
1.04 SYSTEM DESCRIPTION
1.05 SUBMITTALS
1.06 DELIVERY, STORAGE AND HANDLING
1.07 SITE CONDITIONS

PART 2 PRODUCTS

2.01 MANUFACTURERS
2.02 MATERIALS
2.03 EQUIPMENT
2.04 COMPONENTS
2.05 FABRICATION
2.06 SHOP QUALITY CONTROL

PART 3 EXECUTION

3.01 PREPARATION
3.02 ERECTION, INSTALLATION AND APPLICATION
3.03 FIELD QUALITY CONTROL
3.04 ADJUSTING AND CLEANING
3.05 DEMONSTRATION
3.06 PROTECTION

APPENDIX

APPENDIX A DATA SHEETS

WRAP MODULE 2A

SECTION 14551

GROUT STABILIZATION CONVEYING SYSTEM

PART 1 GENERAL

1.01 SECTION SCOPE

A. This specification establishes the requirements for detailed design, fabrication, installation, start-up, and acceptance testing of complete power roller conveyor system for conveying repackaged waste in 55 gallon drum containers in the grouting stabilization enclosure in WRAP Module 2A Facility.

1.02 RELATED SECTIONS

1.03 REFERENCES

A. Anti-Friction Bearing Manufacturer's Association (AFBMA)
AFBMA — All applicable sections.

B. American National Standards Institute (ANSI)
ANSI — All applicable sections.

C. American Society for Testing and Materials (ASTM)
ASTM — All applicable sections.

D. American Welding Society (AWS)
AWS D1.1 — "Structural Welding Code"

E. Occupational Safety and Health Administration (OSHA)
OSHA 29 CFR Part 1910

F. Conveyor Equipment Manufacturers Association (CEMA)
CEMA Std. 404 — Chain Driven Live Roller Conveyors
CEMA Std. 401 — Nonpowered Roller Conveyors

G. National Electric Code (NEC)
NEC — All applicable sections.

H. National Electric Manufacturers Association (NEM)
NEMA MG-1 — Motors and Generators

I. American Gear Manufacturers Association (AGMA)
AGMA — All applicable sections.

J. Mechanical Power Transmission Association (MPTA)
MPTA ND 301 All applicable sections.

1.04 SYSTEM DESCRIPTION

A. This drum handling system is for handling repackaged waste in 55 gallon drums. There are two input roller conveyor systems, one for handling drums with waste requiring grout vibrating process, and the other for handling waste, requiring an agitated grouting process. Each powered roller conveyor will receive waste drums from an automatic guided vehicle (AGV). The waste drums are conveyed through an airlock into the grout stabilization enclosure, housing the grouting station.

B. In the grouting station the waste drum is elevated into an overhead grouting enclosure with a scissors lift table/roller conveyor. After filling the waste drum with grout, the waste drum is lowered to the receiving conveyor roller elevation, and the waste drum with its contents is conveyed and transferred onto a powered roller accumulating conveyor for curing. After the grout curing period, the drum is transferred onto a powered roller conveyor, common to both the agitated and vibrated waste, conveyed onto a powered roller conveyor/turn table. Here the waste drum is rotated 180° increments for decanting surplus grout water, monitored for exterior contaminates, and washed. After the drum is washed, the waste drum is conveyed through an airlock via a powered roller conveyor. Here the A.G. vehicle interfaces with this unloading conveyor and the waste drum is conveyed onto AGV to be transported to the storage area.

C. Data Sheets

Equipment Tag Nos. WBS Area Location Numbers and equipment data sheets for this description are provided in **Appendix A.**

END OF SECTION

WRAP MODULE 2A

WBS LOCATION	EQUIPMENT TAG	SERVICE
1105	CV-05-217	Drum Transfer Roller Conveyor
1105	CV-05-218	Agitated Grout Curing Roller Conveyor
1105	CV-05-228	Turntable Roller Conveyor to Airlock Conveyor
1105	XX-05-225	Turntable

9413227.0473

UNITED ENGINEERS & CONSTRUCTORS A Raytheon Company Western Operations	EQUIPMENT DATA SHEET ☒ CDR ☐ TITLE I ☐ TITLE II ☐ TITLE III	ITEM NUMBER CV-05-212A	PAGE 1 OF 1
CUSTOMER & LOCATION DOE-RL/WHC HANFORD, WA	PROJECT WRAP FACILITY MODULE 2A	UE&C JOB NO. 6237.006 / ACCOUNT NO.	DATE: 06/20/92 / BY: JPJ

REVISIONS (DATE & BY)	A		B		C		D	
	E		F		G		H	

SERVICE	MANUFACTURER	NO. REQ'D.	SOURCE OF QUOTE
INPUT CONVEYOR FROM AGV		1	

CHAIN DRIVEN LIVE ROLLER CONVEYOR

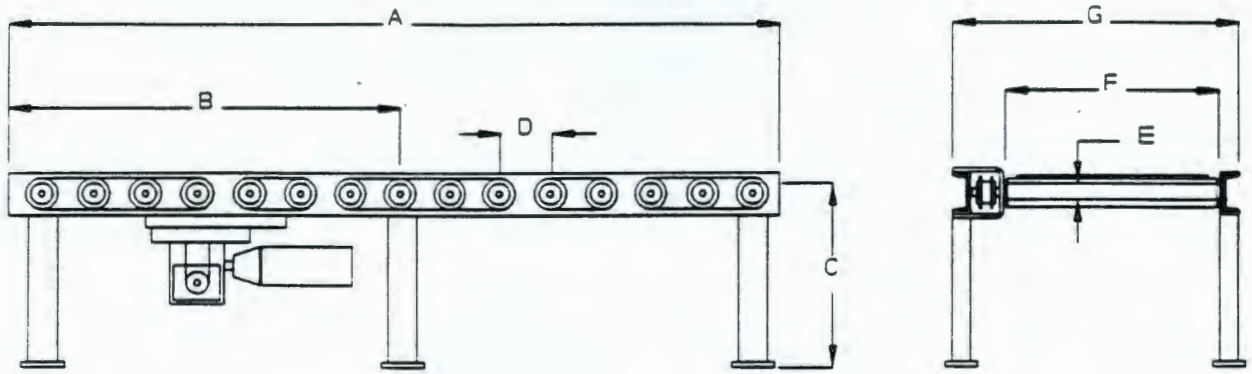

CONDITIONS OF SERVICE		DIMENSIONS	
APPLICATION: RECEIVE 55 GAL DRUM FROM AGV FOR GROUT STABILIZATION		A: 4'-0"	E: 2.5"
UNIT LOAD DESCRIPTION: 55 CALLON DRUMS		B:	F: 2'-6"
UNIT LOAD SIZE: 23.5" DIA X 34.5" HIGH	SPEED: 30 FPM	C: 2'-2"	G: 3'-3"
UNIT LOAD WEIGHT: 1,000 LBS	DUTY: 8 HOURS/DAY	D: 4"	H:
IMPACT LOADING: MODERATE	CONVEYOR PITCH/SLOPE: HORIZONTAL		
LOCATION:	NEC AREA CLASS: UNCLASSIFIED		
CONSTRUCTION			
FRAME MATL. (ASTM): A36	ROLLER MATL. (ASTM): A36		
LENGTH: 4'-0"	ROLLER CAPACITY (Es.): TBD		
WIDTH (Inside): 30"	DRIVE CAPACITY: 6,050 LBS		
ACCUMULATION ZONE LENGTH:	ROLLER SPACING: 4"		
NO. OF ACCUMULATION ZONES:	ROLLER O.D.: 2.5"		
LEG SPACING: 3'-5" +/-	ROLLER THICKNESS: 11 GAGE		
MOTOR RATING: .75 HP	ROLLER RETENTION: PIN/SRPING		
REDUCER TYPE: RA WORM GEAR	BEARING TYPE: BALL		
MOTOR/REDUCER CONN.: DIRECT	NEMA RATING: NEMA 1		
DRIVE TYPE: CHAIN-ROLLER TO ROLLER	SHIPPING WT.: 543 LBS		
CHAIN TYPE: NO 60 ROLLER CHAIN			

9413227.0474

UNITED ENGINEERS & CONSTRUCTORS A Raytheon Company Western Operations	EQUIPMENT DATA SHEET ☒ CDR ☐ TITLE I ☐ TITLE II ☐ TITLE III	ITEM NUMBER CV-05-212B	PAGE 1 OF 1
CUSTOMER & LOCATION DOE-RL/WHC HANFORD, WA	PROJECT WRAP FACILITY MODULE 2A	UE&C JOB NO. 6237.006	DATE: 05/20/92
		ACCOUNT NO.	BY: JPJ

REVISIONS (DATE & BY)	A		B		C		D	
	E		F		G		H	

SERVICE	MANUFACTURER	NO. REQ'D.	SOURCE OF QUOTE
INPUT CONVEYOR FROM AGV		1	

CHAIN DRIVEN LIVE ROLLER CONVEYOR

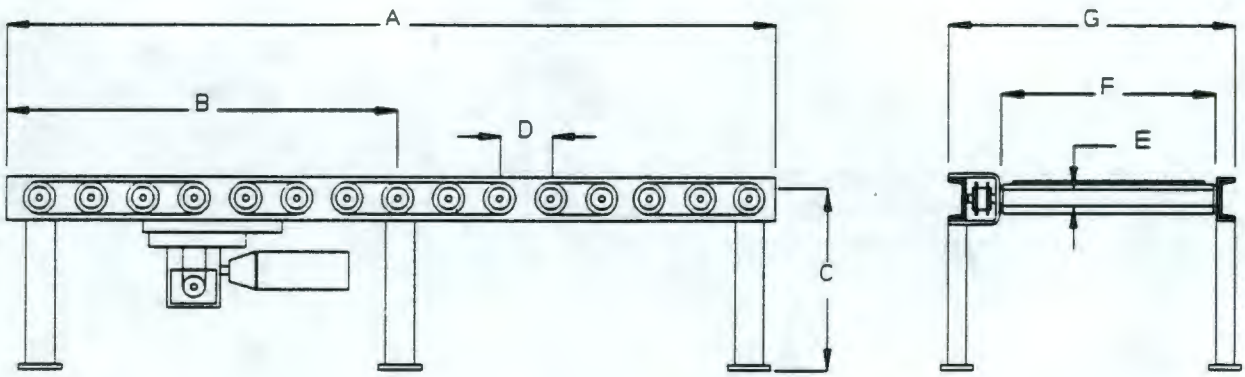

CONDITIONS OF SERVICE		DIMENSIONS	
APPLICATION: RECEIVE 55 GAL DRUM FROM AGV FOR GROUT STABILIZATION		A: 4'-0"	E: 2.5"
UNIT LOAD DESCRIPTION: 55 CALLON DRUMS		B:	F: 2'-6"
UNIT LOAD SIZE: 23.5" DIA X 34.5" HIGH	SPEED: 30 FPM	C: 2'-2"	G: 3'-3"
UNIT LOAD WEIGHT: 1,000 LBS	DUTY: 8 HOURS/DAY	D: 4"	H:
IMPACT LOADING: MODERATE	CONVEYOR PITCH/SLOPE: HORIZONTAL		
LOCATION:	NEC AREA CLASS: UNCLASSIFIED		
CONSTRUCTION			
FRAME MATL. (ASTM): A36	ROLLER MATL. (ASTM): A36		
LENGTH: 4'-0"	ROLLER CAPACITY (Ea.): TBD		
WIDTH (Inside): 30"	DRIVE CAPACITY: 6,050 LBS		
ACCUMULATION ZONE LENGTH:	ROLLER SPACING: 4"		
NO. OF ACCUMULATION ZONES:	ROLLER O.D.: 2.5"		
LEG SPACING: 3'-6" +/-	ROLLER THICKNESS: 11 GAGE		
MOTOR RATING: .75 HP	ROLLER RETENTION: PIN/SRPING		
REDUCER TYPE: RA WORM GEAR	BEARING TYPE: BALL		
MOTOR/REDUCER CONN.: DIRECT	NEMA RATING: NEMA 1		
DRIVE TYPE: CHAIN-ROLLER TO ROLLER	SHIPPING WT.: 543 LBS		
CHAIN TYPE: NO 60 ROLLER CHAIN			

UNITED ENGINEERS & CONSTRUCTORS A Raytheon Company Western Operations	EQUIPMENT DATA SHEET ☒ CDR ☐ TITLE I ☐ TITLE II ☐ TITLE III	ITEM NUMBER CV-05-213A	PAGE 1 OF 1

CUSTOMER & LOCATION	PROJECT	UE&C JOB NO. 6237.006	DATE: 06/20/92
DOE-RL/WHC HANFORD, WA	WRAP FACILITY MODULE 2A	ACCOUNT NO.	BY: JPJ

REVISIONS (DATE & BY)	A		B		C		D	
	E		F		G		H	

SERVICE	MANUFACTURER	NO. REQ'D.	SOURCE OF QUOTE
AIRLOCK CONVEYOR		1	

CHAIN DRIVEN LIVE ROLLER CONVEYOR

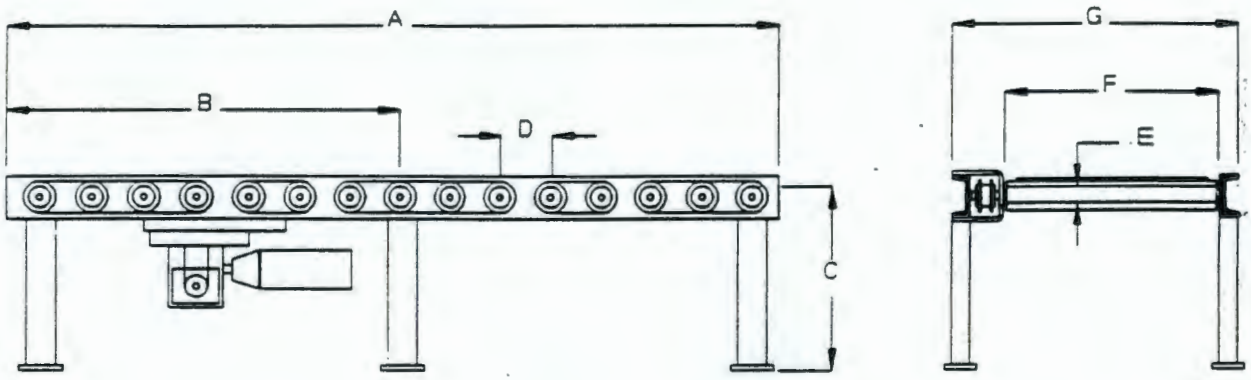

CONDITIONS OF SERVICE		DIMENSIONS	
APPLICATION: DRUM TRANSFER BETWEEN AIRLOCKS		A: 5'-1"	E: 2.5"
UNIT LOAD DESCRIPTION: 55 GALLON DRUMS		B:	F: 2'-6"
UNIT LOAD SIZE: 23.5" DIA X 34.5" HIGH	SPEED: 30 FPM	C: 2'-2"	G: 3'-3"
UNIT LOAD WEIGHT: 1,000 LBS	DUTY: 8 HOURS/DAY	D: 4"	H:
IMPACT LOADING: MODERATE	CONVEYOR PITCH/SLOPE: HORIZONTAL		
LOCATION:	NEC AREA CLASS: UNCLASSIFIED		
CONSTRUCTION			
FRAME MATL. (ASTM): A36	ROLLER MATL. (ASTM): A36		
LENGTH: 5'-1"	ROLLER CAPACITY (Ea.): TBD		
WIDTH (Inside): 30"	DRIVE CAPACITY: 6,050 LBS		
ACCUMULATION ZONE LENGTH:	ROLLER SPACING: 4"		
NO. OF ACCUMULATION ZONES:	ROLLER O.D.: 2.5"		
LEG SPACING: 4'-6" +/-	ROLLER THICKNESS: 11 GAGE		
MOTOR RATING: .75 HP	ROLLER RETENTION: PIN/SRPING		
REDUCER TYPE: RA WORM GEAR	BEARING TYPE: BALL		
MOTOR/REDUCER CONN.: DIRECT	NEMA RATING: NEMA 1		
DRIVE TYPE: CHAIN-ROLLER TO ROLLER	SHIPPING WT.: 533 LBS		
CHAIN TYPE: NO 60 ROLLER CHAIN			

9413227.0476

UNITED ENGINEERS & CONSTRUCTORS A Raytheon Company Western Operations	EQUIPMENT DATA SHEET ☒ CDR ☐ TITLE I ☐ TITLE II ☐ TITLE III	ITEM NUMBER CV-05-213B	PAGE 1 OF 1
CUSTOMER & LOCATION DOE-RL/WHC HANFORD, WA	PROJECT WRAP FACILITY MODULE 2A	UE&C JOB NO. 6237.006	DATE: 06/20/92
		ACCOUNT NO.	BY: JPJ

REVISIONS (DATE & BY)	A		B		C		D	
	E		F		G		H	

SERVICE	MANUFACTURER	NO. REQ'D.	SOURCE OF QUOTE
AIRLOCK CONVEYOR		1	

CHAIN DRIVEN LIVE ROLLER CONVEYOR

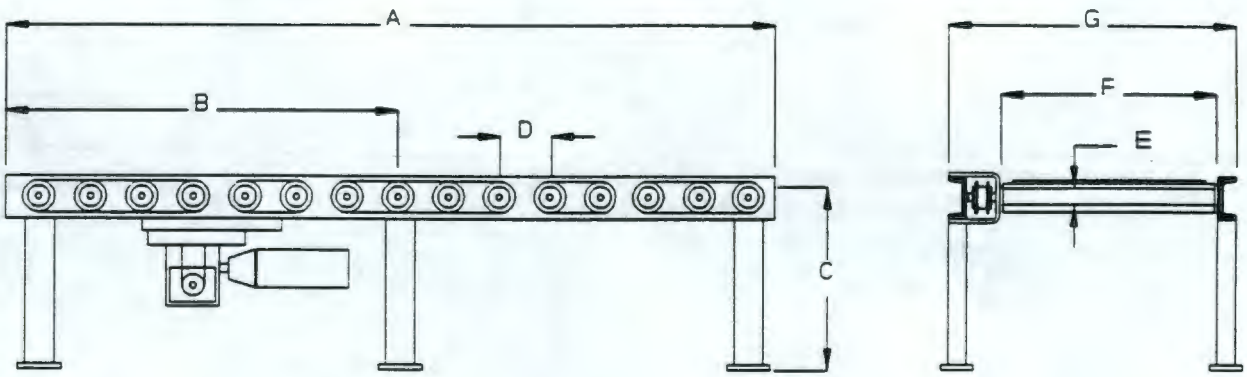

CONDITIONS OF SERVICE		DIMENSIONS	
APPLICATION: DRUM TRANSFER BETWEEN AIRLOCKS		A: 5'-1"	E: 2.5"
UNIT LOAD DESCRIPTION: 55 CALLON DRUMS		B:	F: 2'-6"
UNIT LOAD SIZE: 23.5" DIA X 34.5" HIGH	SPEED: 30 FPM	C: 2'-2"	G: 3'-3"
UNIT LOAD WEIGHT: 1,000 LBS	DUTY: 8 HOURS/DAY	D: 4"	H:
IMPACT LOADING: MODERATE	CONVEYOR PITCH/SLOPE: HORIZONTAL		
LOCATION:	NEC AREA CLASS: UNCLASSIFIED		
CONSTRUCTION			
FRAME MATL. (ASTM): A36	ROLLER MATL. (ASTM): A36		
LENGTH: 5'-1"	ROLLER CAPACITY (Ea.): TBD		
WIDTH (Inside): 30"	DRIVE CAPACITY: 6,050 LBS		
ACCUMULATION ZONE LENGTH:	ROLLER SPACING: 4"		
NO. OF ACCUMULATION ZONES:	ROLLER O.D.: 2.5"		
LEG SPACING: 4'-6" +/-	ROLLER THICKNESS: 11 GAGE		
MOTOR RATING: .75 HP	ROLLER RETENTION: PIN/SRPING		
REDUCER TYPE: RA WORM GEAR	BEARING TYPE: BALL		
MOTOR/REDUCER CONN.: DIRECT	NEMA RATING: NEMA 1		
DRIVE TYPE: CHAIN-ROLLER TO ROLLER	SHIPPING WT.: 533 LBS		
CHAIN TYPE: NO 60 ROLLER CHAIN			

UNITED ENGINEERS & CONSTRUCTORS A Raytheon Company Western Operations	EQUIPMENT DATA SHEET ☒ CDR ☐ TITLE I ☐ TITLE II ☐ TITLE III	ITEM NUMBER CV-05-214	PAGE 1 OF 1
CUSTOMER & LOCATION DOE-RL/WHC HANFORD, WA	PROJECT WRAP FACILITY MODULE 2A	UE&C JOB NO. 6237.006	DATE: 05/20/92
		ACCOUNT NO. -	BY: JPJ

REVISIONS (DATE & BY)	A		B		C		D	
	E		F		G		H	

SERVICE	MANUFACTURER	NO. REQ'D.	SOURCE OF QUOTE
SISSORS LIFT TABLE CONVEYOR		1	

CHAIN DRIVEN LIVE ROLLER CONVEYOR

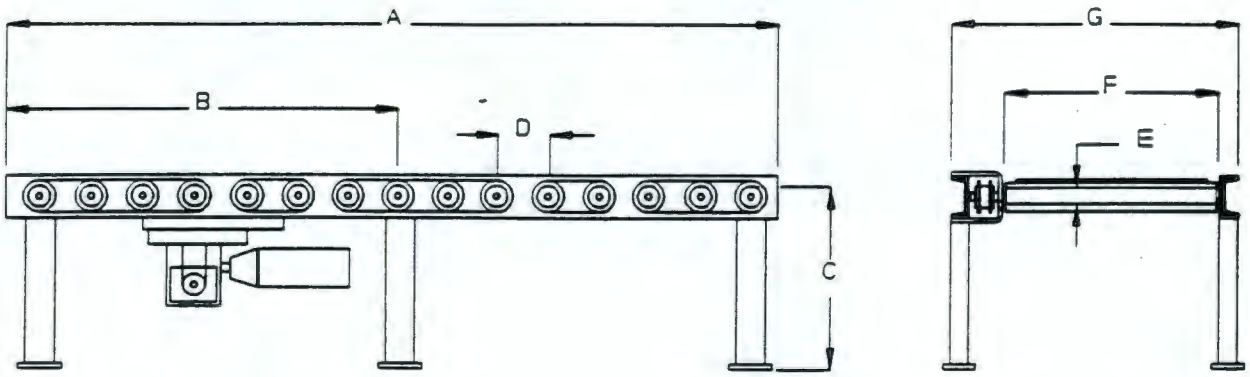

CONDITIONS OF SERVICE		DIMENSIONS	
APPLICATION: CONVEYOR DRUMS ON/OFF LIFT TABLE FOR VIBRO/GROUTING		A: 4'-0"	E: 2.5"
UNIT LOAD DESCRIPTION: 55 CALLON DRUMS		B:	F: 2'-8"
UNIT LOAD SIZE: 23.5" DIA X 34.5" HIGH	SPEED: 30 FPM	C:	G: 3'-3"
UNIT LOAD WEIGHT: 1,000 LBS	DUTY: 8 HOURS/DAY	D: 4"	H:
IMPACT LOADING: MODERATE	CONVEYOR PITCH/SLOPE: HORIZONTAL		
LOCATION:	NEC AREA CLASS: UNCLASSIFIED		
CONSTRUCTION			
FRAME MATL. (ASTM): A36	ROLLER MATL. (ASTM): A36		
LENGTH: 4'-0"	ROLLER CAPACITY (Ea.): TBD		
WIDTH (Inside): 30"	DRIVE CAPACITY: 6,050 LBS		
ACCUMULATION ZONE LENGTH:	ROLLER SPACING: 4"		
NO. OF ACCUMULATION ZONES:	ROLLER O.D.: 2.5"		
LEG SPACING:	ROLLER THICKNESS: 11 GAGE		
MOTOR RATING: .75 HP	ROLLER RETENTION: PIN/SRPING		
REDUCER TYPE: RA WORM GEAR	BEARING TYPE: BALL		
MOTOR/REDUCER CONN.: DIRECT	NEMA RATING: NEMA 1		
DRIVE TYPE: CHAIN-ROLLER TO ROLLER	SHIPPING WT.: 543 LBS		
CHAIN TYPE: NO 60 ROLLER CHAIN			

9413227.0478

UNITED ENGINEERS & CONSTRUCTORS A Raytheon Company Western Operations	EQUIPMENT DATA SHEET ☒ CDR ☐ TITLE I ☐ TITLE II ☐ TITLE III	ITEM NUMBER CV-05-215	PAGE 1 OF 1
CUSTOMER & LOCATION DOE-RL WHC HANFORD, WA	PROJECT WRAP FACILITY MODULE 2A	UE&C JOB NO. 6237.006	DATE: 05/20/92
		ACCOUNT NO.	BY: JPJ

REVISIONS (DATE & BY)	A		B		C		D	
	E		F		G		H	

SERVICE	MANUFACTURER	NO. REQ'D.	SOURCE OF QUOTE
AIRLOCK TO LIFT TABLE ROLLER CONVEYOR		1	

CHAIN DRIVEN LIVE ROLLER CONVEYOR

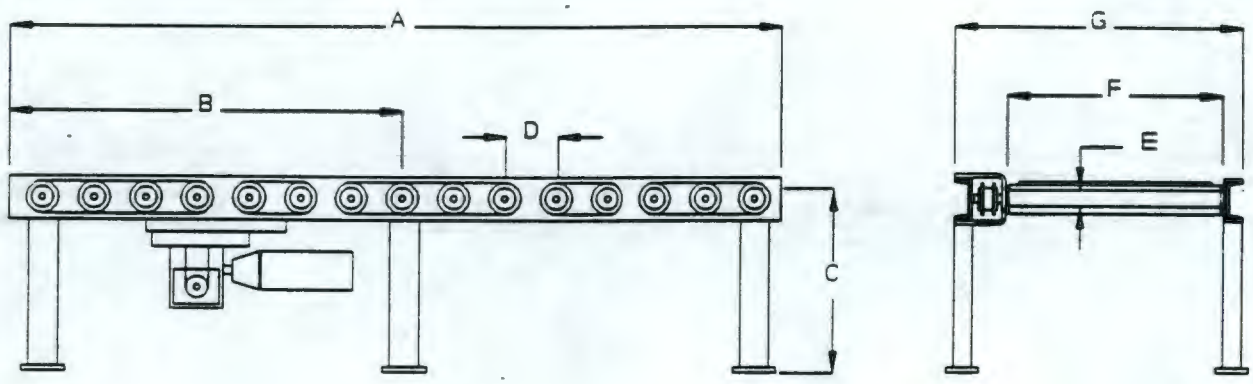

CONDITIONS OF SERVICE		DIMENSIONS	
APPLICATION: DRUM TRANSFER FROM AIRLOCK TO LIFT TABLE		A: 2'-6"	E: 2.5"
UNIT LOAD DESCRIPTION: 55 GALLON DRUMS		B:	F: 2'-6"
UNIT LOAD SIZE: 23.5" DIA X 34.5" HIGH	SPEED: 30 FPM	C: 2'-2"	G: 3'-3"
UNIT LOAD WEIGHT: 1,000 LBS	DUTY: 8 HOURS/DAY	D: 4"	H:
IMPACT LOADING: MODERATE	CONVEYOR PITCH/SLOPE: HORIZONTAL		
LOCATION:	NEC AREA CLASS: UNCLASSIFIED		
CONSTRUCTION			
FRAME MATL. (ASTM): A36	ROLLER MATL. (ASTM): A36		
LENGTH: 2'-6"	ROLLER CAPACITY (Ea.): TBD		
WIDTH (Inside): 30"	DRIVE CAPACITY: 6,050 LBS		
ACCUMULATION ZONE LENGTH:	ROLLER SPACING: 4"		
NO. OF ACCUMULATION ZONES:	ROLLER O.D.: 2.6"		
LEG SPACING: 3'-0" +/-	ROLLER THICKNESS: 11 GAGE		
MOTOR RATING: .75 HP	ROLLER RETENTION: PIN/SPRING		
REDUCER TYPE: RA WORM GEAR	BEARING TYPE: BALL		
MOTOR/REDUCER CONN.: DIRECT	NEMA RATING: NEMA 1		
DRIVE TYPE: CHAIN-ROLLER TO ROLLER	SHIPPING WT.: 420 LBS		
CHAIN TYPE: NO 60 ROLLER CHAIN	-		

UNITED ENGINEERS & CONSTRUCTORS A Raytheon Company Western Operations	EQUIPMENT DATA SHEET ☒ CDR ☐ TITLE I ☐ TITLE II ☐ TITLE III	ITEM NUMBER CV-05-216	PAGE 1 OF 1
CUSTOMER & LOCATION DOE-RL/WHC HANFORD, WA	PROJECT WRAP FACILITY MODULE 2A	UE&C JOB NO. 6237.006	DATE: 05/20/92
		ACCOUNT NO.	BY: JPJ

REVISIONS (DATE & BY)	A		B		C		D	
	E		F		G		H	

SERVICE	MANUFACTURER	NO. REQ'D.	SOURCE OF QUOTE
AIRLOCK TO LIFT TABLE ROLLER CONVEYOR		1	

CHAIN DRIVEN LIVE ROLLER CONVEYOR

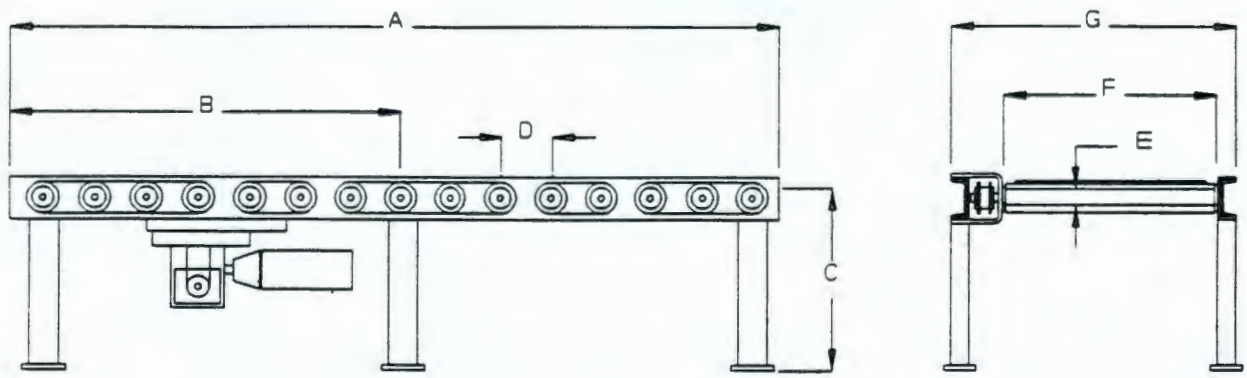

CONDITIONS OF SERVICE		DIMENSIONS	
APPLICATION: DRUM TRANSFER FROM AIRLOCK TO LIFT TABLE		A: 2'-6"	E: 2.5"
UNIT LOAD DESCRIPTION: 55 CALLON DRUMS		B:	F: 2'-6"
UNIT LOAD SIZE: 23.5" DIA X 34.5" HIGH	SPEED: 30 FPM	C: 2'-2"	G: 3'-3"
UNIT LOAD WEIGHT: 1,000 LBS	DUTY: 8 HOURS/DAY	D: 4"	H:
IMPACT LOADING: MODERATE	CONVEYOR PITCH/SLOPE: HORIZONTAL		
LOCATION:	NEC AREA CLASS: UNCLASSIFIED		
CONSTRUCTION			
FRAME MATL. (ASTM): A36	ROLLER MATL. (ASTM): A36		
LENGTH: 2'-6"	ROLLER CAPACITY (Ea.): TBD		
WIDTH (Inside): 30"	DRIVE CAPACITY: 6,050 LBS		
ACCUMULATION ZONE LENGTH:	ROLLER SPACING: 4"		
NO. OF ACCUMULATION ZONES:	ROLLER O.D.: 2.5"		
LEG SPACING: 2'-0" +/-	ROLLER THICKNESS: 11 GAGE		
MOTOR RATING: .75 HP	ROLLER RETENTION: PIN/SRPING		
REDUCER TYPE: RA WORM GEAR	BEARING TYPE: BALL		
MOTOR/REDUCER CONN.: DIRECT	NEMA RATING: NEMA 1		
DRIVE TYPE: CHAIN-ROLLER TO ROLLER	SHIPPING WT.: 420 LBS		
CHAIN TYPE: NO 60 ROLLER CHAIN			

9413227.0480

UNITED ENGINEERS & CONSTRUCTORS A Raytheon Company Western Operations	EQUIPMENT DATA SHEET ☒ CDR ☐ TITLE I ☐ TITLE II ☐ TITLE III	ITEM NUMBER CV-05-217	PAGE 1 OF 1
CUSTOMER & LOCATION DOE-RL/WHC HANFORD, WA	PROJECT WRAP FACILITY MODULE 2A	UE&C JOB NO. 6237.006	DATE: 05/20/92
		ACCOUNT NO.	BY: JPJ

REVISIONS (DATE & BY)	A		B		C		D	
	E		F		G		H	

SERVICE	MANUFACTURER	NO. REQ'D.	SOURCE OF QUOTE
DRUM TRANSFER ROLLER CONVEYOR		1	

CHAIN DRIVEN LIVE ROLLER CONVEYOR

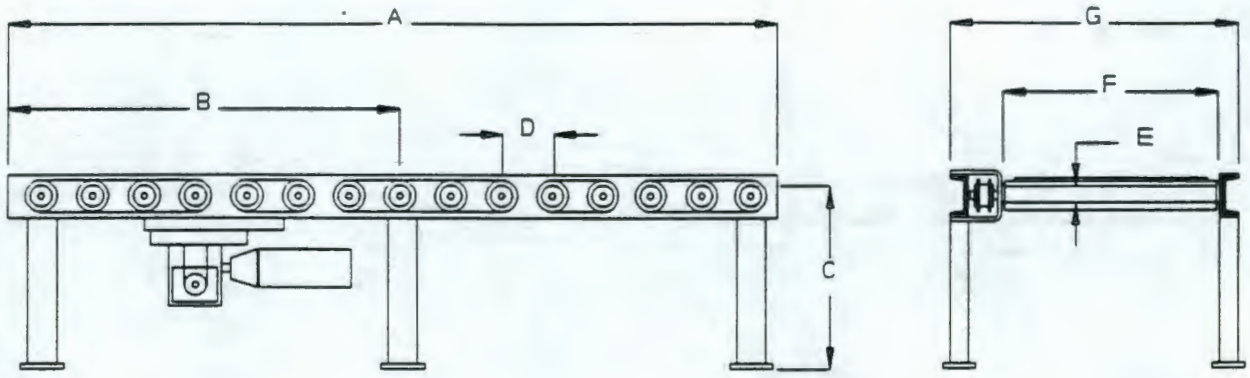

CONDITIONS OF SERVICE		DIMENSIONS	
APPLICATION: DRUM TRANSFER - LIFT TABLE TO CV-05-218		A: 7'-8"	E: 2.5"
UNIT LOAD DESCRIPTION: 55 GALLON DRUMS		B:	F: 2'-6"
UNIT LOAD SIZE: 23.5" DIA X 34.5" HIGH	SPEED: 30 FPM	C: 3'-0"	G: 3'-3"
UNIT LOAD WEIGHT: 1,000 LBS	DUTY: 8 HOURS/DAY	D: 4"	H:
IMPACT LOADING: MODERATE	CONVEYOR PITCH/SLOPE: HORIZONTAL		
LOCATION:	NEC AREA CLASS: UNCLASSIFIED		
CONSTRUCTION			
FRAME MATL. (ASTM): A36	ROLLER MATL. (ASTM): A36		
LENGTH: 7'-8"	ROLLER CAPACITY (Ea.): TBD		
WIDTH (Inside): 30"	DRIVE CAPACITY: 6,050 LBS		
ACCUMULATION ZONE LENGTH:	ROLLER SPACING: 4"		
NO. OF ACCUMULATION ZONES:	ROLLER O.D.: 2.5"		
LEG SPACING: 4'-9"/2'-5" +/-	ROLLER THICKNESS: 11 GAGE		
MOTOR RATING: .75 HP	ROLLER RETENTION: PIN/SRPING		
REDUCER TYPE: RA WORM GEAR	BEARING TYPE: BALL		
MOTOR/REDUCER CONN.: DIRECT	NEMA RATING: NEMA 1		
DRIVE TYPE: CHAIN-ROLLER TO ROLLER	SHIPPING WT.: 847 LBS		
CHAIN TYPE: NO 60 ROLLER CHAIN			
DRUM TRANSFER: LATERAL			
TRANSFER TYPE: CHAIN			

UNITED ENGINEERS & CONSTRUCTORS A Raytheon Company Western Operations	EQUIPMENT DATA SHEET ☒ CDR ☐ TITLE I ☐ TITLE II ☐ TITLE III	ITEM NUMBER CV-05-218	PAGE 1 OF 1
CUSTOMER & LOCATION DOE-RL/WHC HANFORD, WA	PROJECT WRAP FACILITY MODULE 2A	UE&C JOB NO. 6237.006 / ACCOUNT NO.	DATE: 06/20/92 / BY: JPJ

REVISIONS (DATE & BY)	A		B		C		D	
	E		F		G		H	

SERVICE	MANUFACTURER	NO. REQ'D.	SOURCE OF QUOTE
AGITATED GROUT CURING CONVEYOR		1	

CHAIN DRIVEN LIVE ROLLER CONVEYOR

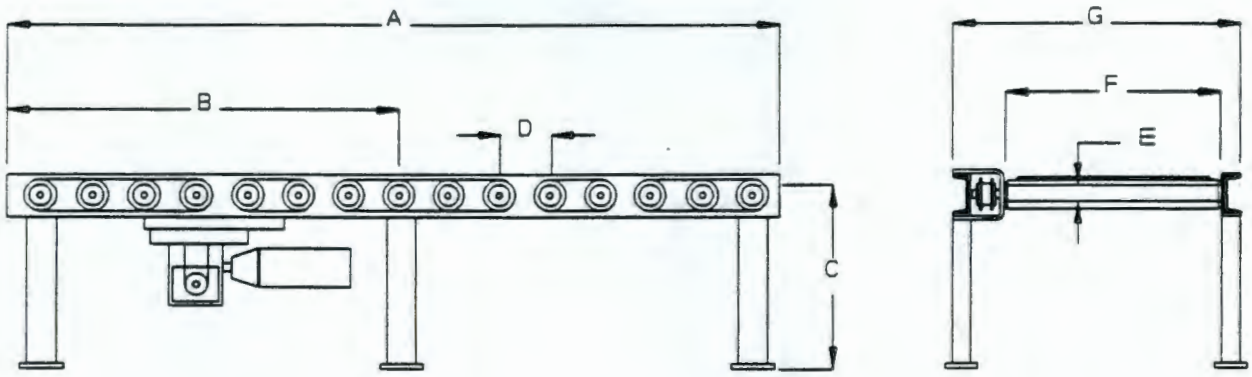

CONDITIONS OF SERVICE		DIMENSIONS	
APPLICATION: AGITATED GROUT CURING CONVEYOR		A: 27'-0"	E: 2.5"
UNIT LOAD DESCRIPTION: 55 CALLON DRUMS		B:	F: 2'-6"
UNIT LOAD SIZE: 23.5" DIA X 34.5" HIGH	SPEED: 30 FPM	C: 5'-0"	G: 3'-3"
UNIT LOAD WEIGHT: 1,000 LBS	DUTY: 8 HOURS/DAY	D: 4"	H:
IMPACT LOADING: MODERATE	CONVEYOR PITCH/SLOPE: HORIZONTAL		
LOCATION:	NEC AREA CLASS: UNCLASSIFIED		
CONSTRUCTION			
FRAME MATL. (ASTM): A36	ROLLER MATL. (ASTM): A36		
LENGTH: 27'-0"	ROLLER CAPACITY (Ea.): TBD		
WIDTH (Inside): 30"	DRIVE CAPACITY: 6,050 LBS		
ACCUMULATION ZONE LENGTH: 30"	ROLLER SPACING: 4"		
NO. OF ACCUMULATION ZONES: 11	ROLLER O.D.: 2.5"		
LEG SPACING: 5' TYP	ROLLER THICKNESS: 11 GAGE		
MOTOR RATING: .75 HP	ROLLER RETENTION: PIN/SRPING		
REDUCER TYPE: RA WORM GEAR	BEARING TYPE: BALL		
MOTOR/REDUCER CONN.: DIRECT	NEMA RATING: NEMA 1		
DRIVE TYPE: CHAIN-ROLLER TO ROLLER	SHIPPING WT.: 2,452 LBS		
CHAIN TYPE: NO 60 ROLLER CHAIN			
DRUM TRANSFER: AXIAL, HEAD AND TAIL			
TRANSFER TYPE: CHAIN			

9413227.0482

UNITED ENGINEERS & CONSTRUCTORS A Raytheon Company Western Operations	EQUIPMENT DATA SHEET ☒ CDR ☐ TITLE I ☐ TITLE II ☐ TITLE III	ITEM NUMBER CV-05-219	PAGE 1 OF 1
CUSTOMER & LOCATION DOE-RL/WHC HANFORD, WA	PROJECT WRAP FACILITY MODULE 2A	UE&C JOB NO. 6237.006	DATE: 05/20/92
		ACCOUNT NO.	BY: JPJ

REVISIONS (DATE & BY)	A		B		C		D	
	E		F		G		H	

SERVICE	MANUFACTURER	NO. REQ'D.	SOURCE OF QUOTE
SISSORS LIFT TABLE CONVEYOR		1	

CHAIN DRIVEN LIVE ROLLER CONVEYOR

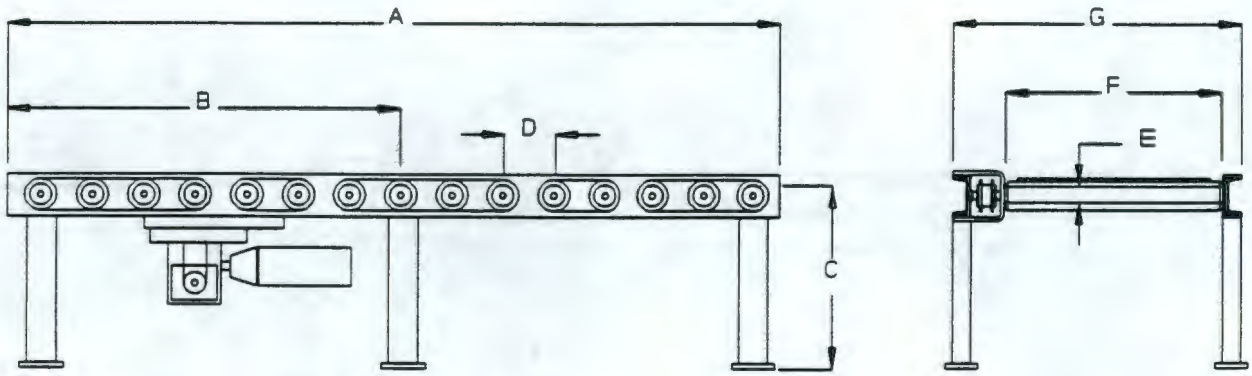

CONDITIONS OF SERVICE		DIMENSIONS	
APPLICATION: CONVEY DRUMS ON/OFF LIFT TABLE FOR AGITATOR/GROUTING		A: 4'-0"	E: 2.5"
UNIT LOAD DESCRIPTION: 55 CALLON DRUMS		B:	F: 2'-6"
UNIT LOAD SIZE: 23.5" DIA X 34.5" HIGH	SPEED: 30 FPM	C:	G: 3'-3"
UNIT LOAD WEIGHT: 1,000 LBS	DUTY: 8 HOURS/DAY	D: 4"	H:
IMPACT LOADING: MODERATE	CONVEYOR PITCH/SLOPE: HORIZONTAL		
LOCATION:	NEC AREA CLASS: UNCLASSIFIED		
CONSTRUCTION			
FRAME MATL. (ASTM): A36	ROLLER MATL. (ASTM): A36		
LENGTH: 4'-0"	ROLLER CAPACITY (Ea.): TBD		
WIDTH (Inside): 30"	DRIVE CAPACITY: 6,050 LBS		
ACCUMULATION ZONE LENGTH:	ROLLER SPACING: 4"		
NO. OF ACCUMULATION ZONES:	ROLLER O.D.: 2.5"		
LEG SPACING:	ROLLER THICKNESS: 11 GAGE		
MOTOR RATING: .75 HP	ROLLER RETENTION: PIN/SRPING		
REDUCER TYPE: RA WORM GEAR	BEARING TYPE: BALL		
MOTOR/REDUCER CONN.: DIRECT	NEMA RATING: NEMA 1		
DRIVE TYPE: CHAIN-ROLLER TO ROLLER	SHIPPING WT.: 543 LBS		
CHAIN TYPE: NO. 60 ROLLER CHAIN			

UNITED ENGINEERS & CONSTRUCTORS A Raytheon Company Western Operations	EQUIPMENT DATA SHEET ☒ CDR ☐ TITLE I ☐ TITLE II ☐ TITLE III	ITEM NUMBER CV-05-220	PAGE 1 OF 1
CUSTOMER & LOCATION DOE-RL/WHC HANFORD, WA	PROJECT WRAP FACILITY MODULE 2A	UE&C JOB NO. 6237.006 / ACCOUNT NO.	DATE: 06/20/92 / BY: JPJ

REVISIONS (DATE & BY)	A		B		C		D	
	E		F		G		H	

SERVICE	MANUFACTURER	NO. REQ'D.	SOURCE OF QUOTE
DRUM TRANSFER ROLLER CONVEYOR		1	

CHAIN DRIVEN LIVE ROLLER CONVEYOR

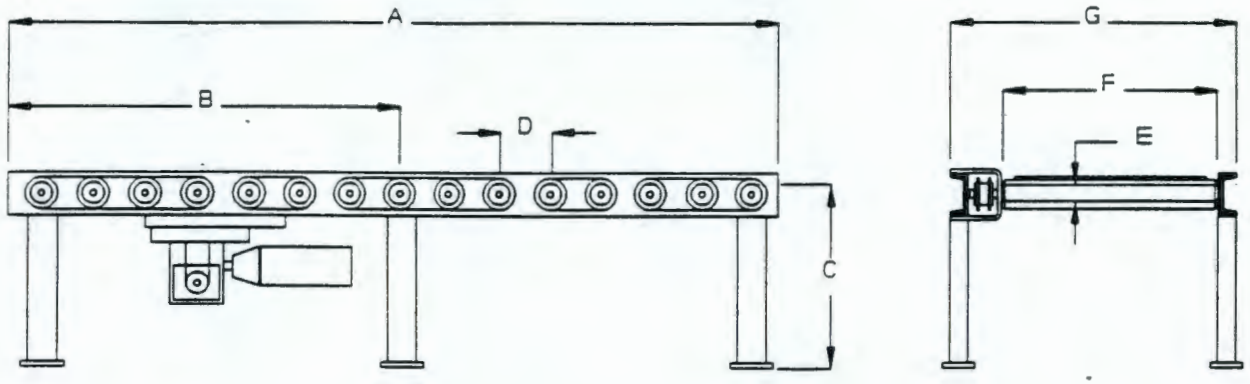

CONDITIONS OF SERVICE		DIMENSIONS	
APPLICATION: DRUM TRANSFER - LIFT TABLE TO CV-05-221		A: 3'-2"	E: 2.5"
UNIT LOAD DESCRIPTION: 55 GALLON DRUMS		B:	F: 2'-6"
UNIT LOAD SIZE: 23.5" DIA X 34.5" HIGH	SPEED: 30 FPM	C: 2'-2"	G: 3'-3"
UNIT LOAD WEIGHT: 1,000 LBS	DUTY: 8 HOURS/DAY	D: 4"	H:
IMPACT LOADING: MODERATE	CONVEYOR PITCH/SLOPE: HORIZONTAL		
LOCATION:	NEC AREA CLASS: UNCLASSIFIED		
CONSTRUCTION			
FRAME MATL. (ASTM): A36	ROLLER MATL. (ASTM): A36		
LENGTH: 3'-2"	ROLLER CAPACITY (Ea.): TBD		
WIDTH (Inside): 30"	DRIVE CAPACITY: 6,050 LBS		
ACCUMULATION ZONE LENGTH:	ROLLER SPACING: 4"		
NO. OF ACCUMULATION ZONES:	ROLLER O.D.: 2.5"		
LEG SPACING: 2'-5" +/-	ROLLER THICKNESS: 11 GAGE		
MOTOR RATING: .75 HP	ROLLER RETENTION: PIN/SRPING		
REDUCER TYPE: RA WORM GEAR	BEARING TYPE: BALL		
MOTOR/REDUCER CONN.: DIRECT	NEMA RATING: NEMA 1		
DRIVE TYPE: CHAIN-ROLLER TO ROLLER	SHIPPING WT.: 474 LBS		
CHAIN TYPE: NO. 60 ROLLER CHAIN			
DRUM TRANSFER: LATERAL			
TRANSFER TYPE: CHAIN			

9413227.0484

UNITED ENGINEERS & CONSTRUCTORS A Raytheon Company Western Operations	EQUIPMENT DATA SHEET ☒ CDR ☐ TITLE I ☐ TITLE II ☐ TITLE III	ITEM NUMBER CV-06-221	PAGE 1 OF 1
CUSTOMER & LOCATION DOE-RL/WHC HANFORD, WA	PROJECT WRAP FACILITY MODULE 2A	UE&C JOB NO. 6237.006	DATE: 06/20/92
		ACCOUNT NO.	BY: JPJ

REVISIONS (DATE & BY)	A		B		C		D	
	E		F		G		H	

SERVICE	MANUFACTURER	NO. REQ'D.	SOURCE OF QUOTE
VIBRATED GROUT CURING CONVEYOR		1	

CHAIN DRIVEN LIVE ROLLER CONVEYOR

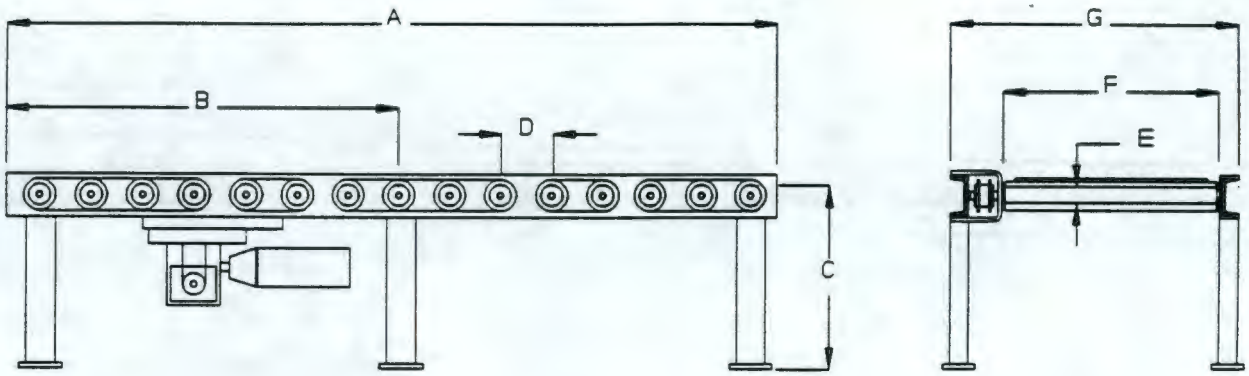

CONDITIONS OF SERVICE		DIMENSIONS	
APPLICATION: VIBRATED GROUT CURING CONVEYOR		A: 23'-0"	E: 2.5"
UNIT LOAD DESCRIPTION: 55 CALLON DRUMS		B: 5"-0"	F: 2'-8"
UNIT LOAD SIZE: 23.5" DIA X 34.5" HIGH	SPEED: 30 FPM	C: 2'-2"	G: 3'-3"
UNIT LOAD WEIGHT: 1,000 LBS	DUTY: 8 HOURS/DAY	D: 4"	H:
IMPACT LOADING: MODERATE	CONVEYOR PITCH/SLOPE: HORIZONTAL		
LOCATION:	NEC AREA CLASS: UNCLASSIFIED		
CONSTRUCTION			
FRAME MATL. (ASTM): A36	ROLLER MATL. (ASTM): A36		
LENGTH: 23'-0"	ROLLER CAPACITY (Ea.): TBD		
WIDTH (Inside): 30"	DRIVE CAPACITY: 6,050 LBS		
ACCUMULATION ZONE LENGTH: 30"	ROLLER SPACING: 4"		
NO. OF ACCUMULATION ZONES:	ROLLER O.D.: 2.5"		
LEG SPACING: 5' TYP	ROLLER THICKNESS: 11 GAGE		
MOTOR RATING: .75 HP	ROLLER RETENTION: PIN/SRPING		
REDUCER TYPE: RA WORM GEAR	BEARING TYPE: BALL		
MOTOR/REDUCER CONN.: DIRECT	NEMA RATING: NEMA 1		
DRIVE TYPE: CHAIN-ROLLER TO ROLLER	SHIPPING WT.: 2,120 LBS		
CHAIN TYPE: NO 60 ROLLER CHAIN			
DRUM TRANSFER: AXIAL, HEAD AND TAIL			
TRANSFER TYPE: CHAIN			

UNITED ENGINEERS & CONSTRUCTORS A Raytheon Company Western Operations	EQUIPMENT DATA SHEET ☒ CDR ☐ TITLE I ☐ TITLE II ☐ TITLE III	ITEM NUMBER CV-05-224	PAGE 1 OF 1
CUSTOMER & LOCATION DOE-RL/WHC HANFORD, WA	PROJECT WRAP FACILITY MODULE 2A	UE&C JOB NO. 6237.006	DATE: 05/20/92
		ACCOUNT NO.	BY: JPJ

REVISIONS (DATE & BY)	A		B		C		D	
	E		F		G		H	

SERVICE	MANUFACTURER	NO. REQ'D.	SOURCE OF QUOTE
TRANSFER CONVEYOR TO TURNTABLE		1	

CHAIN DRIVEN LIVE ROLLER CONVEYOR

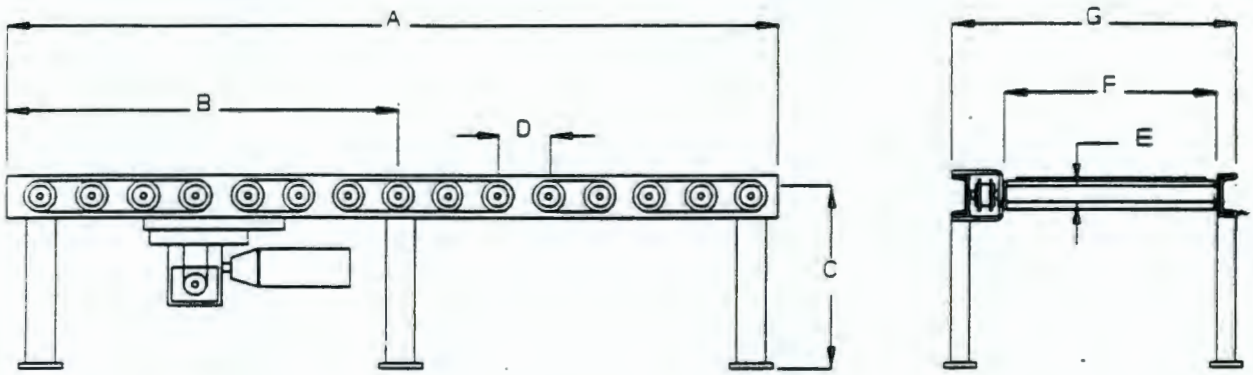

CONDITIONS OF SERVICE		DIMENSIONS	
APPLICATION: DRUM TRANSFER TO TURNTABLE CONVEYOR		A: 6'-4"	E: 2.5"
UNIT LOAD DESCRIPTION: 55 GALLON DRUMS		B: 2'-3"	F: 2'-6"
UNIT LOAD SIZE: 23.5" DIA X 34.5" HIGH	SPEED: 30 FPM	C: 2'-2"	G: 3'-3"
UNIT LOAD WEIGHT: 1,000 LBS	DUTY: 8 HOURS/DAY	D: 4"	H:
IMPACT LOADING: MODERATE	CONVEYOR PITCH/SLOPE: HORIZONTAL		
LOCATION:	NEC AREA CLASS: UNCLASSIFIED		
CONSTRUCTION			
FRAME MATL. (ASTM): A36	ROLLER MATL. (ASTM): A36		
LENGTH: 6'-4"	ROLLER CAPACITY (Ea.): TBD		
WIDTH (Inside): 30"	DRIVE CAPACITY: 6,050 LBS		
ACCUMULATION ZONE LENGTH:	ROLLER SPACING: 4"		
NO. OF ACCUMULATION ZONES:	ROLLER O.D.: 2.5"		
LEG SPACING: 2'-3"	ROLLER THICKNESS: 11 GAGE		
MOTOR RATING: .75 HP	ROLLER RETENTION: PIN/SPRING		
REDUCER TYPE: RA WORM GEAR	BEARING TYPE: BALL		
MOTOR/REDUCER CONN.: DIRECT	NEMA RATING: NEMA 1		
DRIVE TYPE: CHAIN-ROLLER TO ROLLER	SHIPPING WT.: 737 LBS		
CHAIN TYPE: NO 60 ROLLER CHAIN			
DRUM TRANSFER: LATERAL, 2 POINTS			
TRANSFER TYPE: CHAIN			

9413227.0986

UNITED ENGINEERS & CONSTRUCTORS A Raytheon Company Western Operations	EQUIPMENT DATA SHEET ☒ CDR ☐ TITLE I ☐ TITLE II ☐ TITLE III	ITEM NUMBER CV-05-225	PAGE 1 OF 1
CUSTOMER & LOCATION DOE-RL/WHC HANFORD, WA	PROJECT WRAP FACILITY MODULE 2A	UE&C JOB NO. 6237.006	DATE: 05/20/92
		ACCOUNT NO.	BY: JPJ

REVISIONS (DATE & BY)	A		B		C		D	
	E		F		G		H	

SERVICE	MANUFACTURER	NO. REQ'D.	SOURCE OF QUOTE
TURNTABLE ROLLER CONVEYOR		1	

CHAIN DRIVEN LIVE ROLLER CONVEYOR

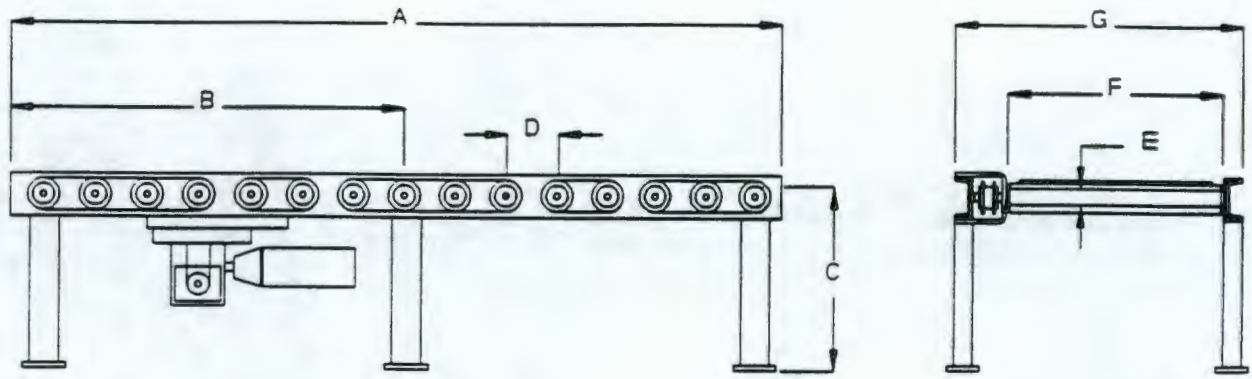

CONDITIONS OF SERVICE		DIMENSIONS	
APPLICATION: TRANSFER DRUM ON/OFF TURNTABLE		A: 6'-4"	E: 2.5"
UNIT LOAD DESCRIPTION: 55 GALLON DRUMS		B:	F: 2'-6"
UNIT LOAD SIZE: 23.5" DIA X 34.5" HIGH	SPEED: 30 FPM	C:	G: 3'-3"
UNIT LOAD WEIGHT: 1,000 LBS	DUTY: 8 HOURS/DAY	D: 4"	H:
IMPACT LOADING: MODERATE	CONVEYOR PITCH/SLOPE: HORIZONTAL		
LOCATION:	NEC AREA CLASS: UNCLASSIFIED		
	-		
CONSTRUCTION			
FRAME MATL. (ASTM): A36	ROLLER MATL. (ASTM): A36		
LENGTH: 6'-4"	ROLLER CAPACITY (Ea.): TBD		
WIDTH (Inside): 30"	DRIVE CAPACITY: 6,050 LBS		
ACCUMULATION ZONE LENGTH:	ROLLER SPACING: 4"		
NO. OF ACCUMULATION ZONES:	ROLLER O.D.: 2.5"		
LEG SPACING:	ROLLER THICKNESS: 11 GAGE		
MOTOR RATING: .75 HP	ROLLER RETENTION: PIN/SPRING		
REDUCER TYPE: RA WORM GEAR	BEARING TYPE: BALL		
MOTOR/REDUCER CONN.: DIRECT	NEMA RATING: NEMA 1		
DRIVE TYPE: CHAIN-ROLLER TO ROLLER	SHIPPING WT.: 710 LBS		
CHAIN TYPE: NO. 60 ROLLER CHAIN			

UNITED ENGINEERS & CONSTRUCTORS A Raytheon Company Western Operations	EQUIPMENT DATA SHEET ☒ CDR ☐ TITLE I ☐ TITLE II ☐ TITLE III	ITEM NUMBER CV-05-226	PAGE 1 OF 1
CUSTOMER & LOCATION DOE-RL/WHC HANFORD, WA	PROJECT WRAP FACILITY MODULE 2A	UE&C JOB NO. 6237.006	DATE: 05/20/92
		ACCOUNT NO.	BY: JPJ

REVISIONS (DATE & BY)	A		B		C		D	
	E		F		G		H	

SERVICE	MANUFACTURER	NO. REQ'D.	SOURCE OF QUOTE
AIRLOCK CONVEYOR		1	

CHAIN DRIVEN LIVE ROLLER CONVEYOR

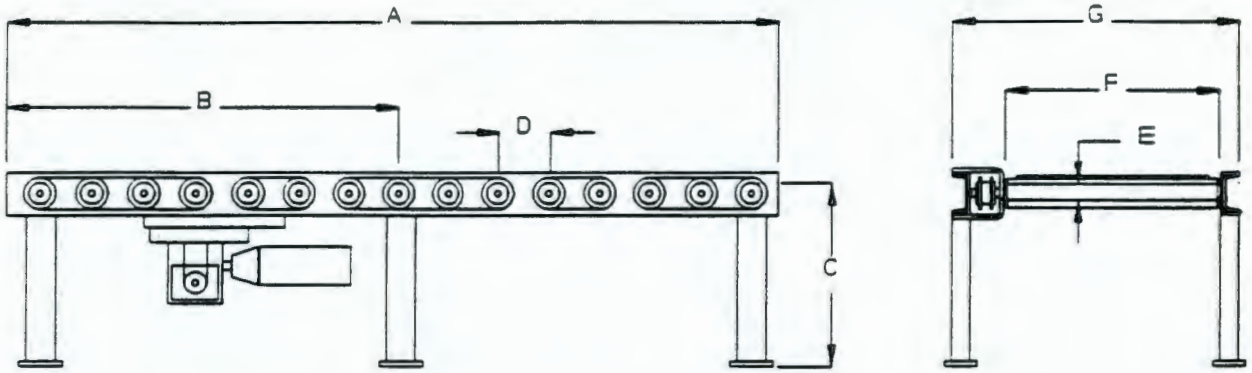

CONDITIONS OF SERVICE		DIMENSIONS	
APPLICATION: DRUM TRANSFER BETWEEN AIRLOCKS		A: 5'-1"	E: 2.5"
UNIT LOAD DESCRIPTION: 55 GALLON DRUMS		B:	F: 2'-6"
UNIT LOAD SIZE: 23.5" DIA X 34.5" HIGH	SPEED: 30 FPM	C: 2'-2"	G: 3'-3"
UNIT LOAD WEIGHT: 1,000 LBS	DUTY: 8 HOURS/DAY	D: 4"	H:
IMPACT LOADING: MODERATE	CONVEYOR PITCH/SLOPE: HORIZONTAL		
LOCATION:	NEC AREA CLASS: UNCLASSIFIED		
CONSTRUCTION			
FRAME MATL. (ASTM): A36	ROLLER MATL. (ASTM): A36		
LENGTH: 5'-1"	ROLLER CAPACITY (Ea.): TBD		
WIDTH (Inside): 30"	DRIVE CAPACITY: 6,050 LBS		
ACCUMULATION ZONE LENGTH:	ROLLER SPACING: 4"		
NO. OF ACCUMULATION ZONES:	ROLLER O.D.: 2.5"		
LEG SPACING: 4'-6" +/-	ROLLER THICKNESS: 11 GAGE		
MOTOR RATING: .75 HP	ROLLER RETENTION: PIN/SRPING		
REDUCER TYPE: RA WORM GEAR	BEARING TYPE: BALL		
MOTOR/REDUCER CONN.: DIRECT	NEMA RATING: NEMA 1		
DRIVE TYPE: CHAIN-ROLLER TO ROLLER	SHIPPING WT.: 633 LBS		
CHAIN TYPE: NO. 60 ROLLER CHAIN			

9413227.0488

UNITED ENGINEERS & CONSTRUCTORS A Raytheon Company Western Operations	EQUIPMENT DATA SHEET ☒ CDR ☐ TITLE I ☐ TITLE II ☐ TITLE III	ITEM NUMBER CV-05-227	PAGE 1 OF 1
CUSTOMER & LOCATION DOE-RL/WHC HANFORD, WA	PROJECT WRAP FACILITY MODULE 2A	UE&C JOB NO. 6237.006	DATE: 06/20/92
		ACCOUNT NO.	BY: JPJ

REVISIONS (DATE & BY)	A		B		C		D	
	E		F		G		H	

SERVICE	MANUFACTURER	NO. REQ'D.	SOURCE OF QUOTE
OUTPUT CONVEYORTO AGV		1	

CHAIN DRIVEN LIVE ROLLER CONVEYOR

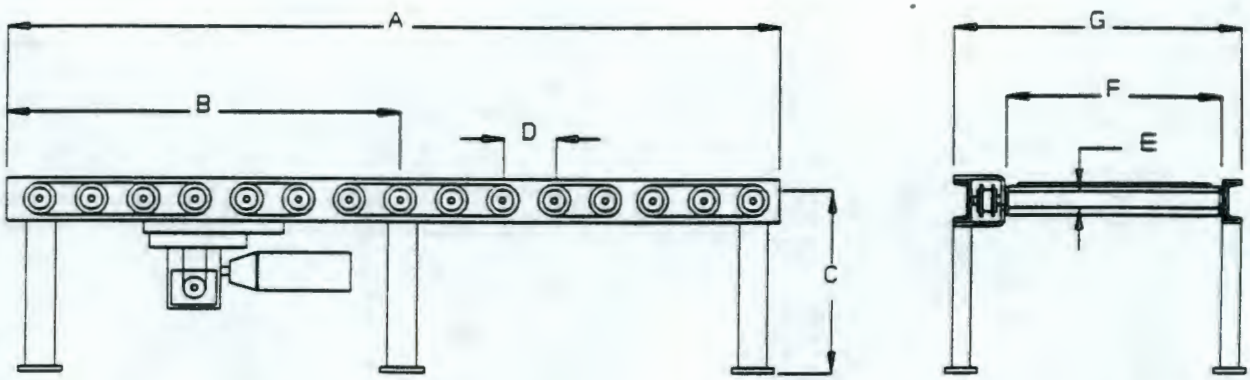

CONDITIONS OF SERVICE		DIMENSIONS	
APPLICATION: TRANSFER STABILIZED DRUM TO AGV		A: 4'-0"	E: 2.5"
UNIT LOAD DESCRIPTION: 55 GALLON DRUMS		B:	F: 2'-6"
UNIT LOAD SIZE: 23.5" DIA X 34.5" HIGH	SPEED: 30 FPM	C: 2'-2"	G: 3'-3"
UNIT LOAD WEIGHT: 1,000 LBS	DUTY: 8 HOURS/DAY	D: 4"	H:
IMPACT LOADING: MODERATE	CONVEYOR PITCH/SLOPE: HORIZONTAL		
LOCATION:	NEC AREA CLASS: UNCLASSIFIED		
CONSTRUCTION			
FRAME MATL. (ASTM): A36	ROLLER MATL. (ASTM): A36		
LENGTH: 4'-0"	ROLLER CAPACITY (Ea.): TBD		
WIDTH (Inside): 30"	DRIVE CAPACITY: 6,050 LBS		
ACCUMULATION ZONE LENGTH:	ROLLER SPACING: 4"		
NO. OF ACCUMULATION ZONES:	ROLLER O.D.: 2.5"		
LEG SPACING: 3'-5" +/-	ROLLER THICKNESS: 11 GAGE		
MOTOR RATING: .75 HP	ROLLER RETENTION: PIN/SPRING		
REDUCER TYPE: RA WORM GEAR	BEARING TYPE: BALL		
MOTOR/REDUCER CONN.: DIRECT	NEMA RATING: NEMA 1		
DRIVE TYPE: CHAIN-ROLLER TO ROLLER	SHIPPING WT.:		
CHAIN TYPE: NO. 60 ROLLER CHAIN			

UNITED ENGINEERS & CONSTRUCTORS A Raytheon Company Western Operations	EQUIPMENT DATA SHEET ☒ CDR ☐ TITLE I ☐ TITLE II ☐ TITLE III	ITEM NUMBER CV-06-228	PAGE 1 OF 1
CUSTOMER & LOCATION DOE-RL/WHC HANFORD, WA	PROJECT WRAP FACILITY MODULE 2A	UE&C JOB NO. 6237.006	DATE: 06/20/92
		ACCOUNT NO.	BY: JPJ

REVISIONS (DATE & BY)	A		B		C		D	
	E		F		G		H	

SERVICE	MANUFACTURER	NO. REQ'D.	SOURCE OF QUOTE
TURNTABLE TO AIRLOCK CONVEYOR		1	

CHAIN DRIVEN LIVE ROLLER CONVEYOR

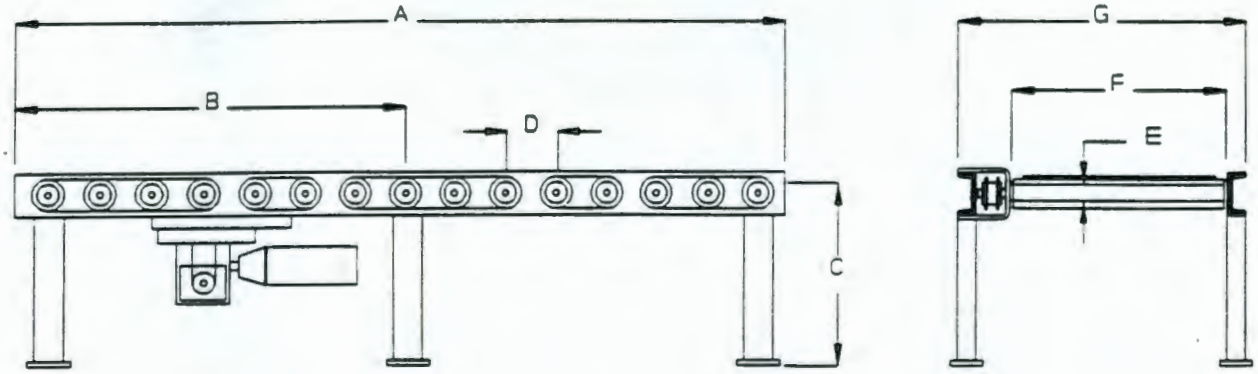

CONDITIONS OF SERVICE		DIMENSIONS	
APPLICATION: TRANSFER DRUMS FROM TURNTABLE TO AIRLOCK		A: 1'-6"	E: 2.5"
UNIT LOAD DESCRIPTION: 55 CALLON DRUMS		B:	F: 2'-6"
UNIT LOAD SIZE: 23.5" DIA X 34.5" HIGH	SPEED: 30 FPM	C: 2'-2"	G: 3'-3"
UNIT LOAD WEIGHT: 1,000 LBS	DUTY: 8 HOURS/DAY	D: 4"	H:
IMPACT LOADING: MODERATE	CONVEYOR PITCH/SLOPE: HORIZONTAL		
LOCATION:	NEC AREA CLASS: UNCLASSIFIED		
CONSTRUCTION			
FRAME MATL. (ASTM): A36	ROLLER MATL. (ASTM): A36		
LENGTH: 1'-6"	ROLLER CAPACITY (Ea.): TBD		
WIDTH (Inside): 30"	DRIVE CAPACITY: 6,050 LBS		
ACCUMULATION ZONE LENGTH:	ROLLER SPACING: 4"		
NO. OF ACCUMULATION ZONES:	ROLLER O.D.: 2.5"		
LEG SPACING: 1'-0" +/-	ROLLER THICKNESS: 11 GAGE		
MOTOR RATING: .75 HP	ROLLER RETENTION: PIN/SRPING		
REDUCER TYPE: RA WORM GEAR	BEARING TYPE: BALL		
MOTOR/REDUCER CONN.: DIRECT	NEMA RATING: NEMA 1		
DRIVE TYPE: CHAIN-ROLLER TO ROLLER	SHIPPING WT.: 315 LBS		
CHAIN TYPE: NO. 60 ROLLER CHAIN			

9413227.0490

UNITED ENGINEERS & CONSTRUCTORS A Raytheon Company Western Operations	EQUIPMENT DATA SHEET ☒ CDR ☐ TITLE I ☐ TITLE II ☐ TITLE III	ITEM NUMBER XX-05-225	PAGE 1 OF 1

CUSTOMER & LOCATION	PROJECT	UE&C JOB NO. 6237.006	DATE: 05/21/92
DOE-RL/WHC HANFORD, WA	WRAP FACILITY MODULE 2A	ACCOUNT NO. 1105	BY: JPJ

REVISIONS (DATE & BY)	A		B		C		D	
	E		F		G		H	

SERVICE	MANUFACTURER	NO. REQ'D.	SOURCE OF QUOTE
ROLLER CONVEYOR TURNTABLE		1	

TURNTABLE

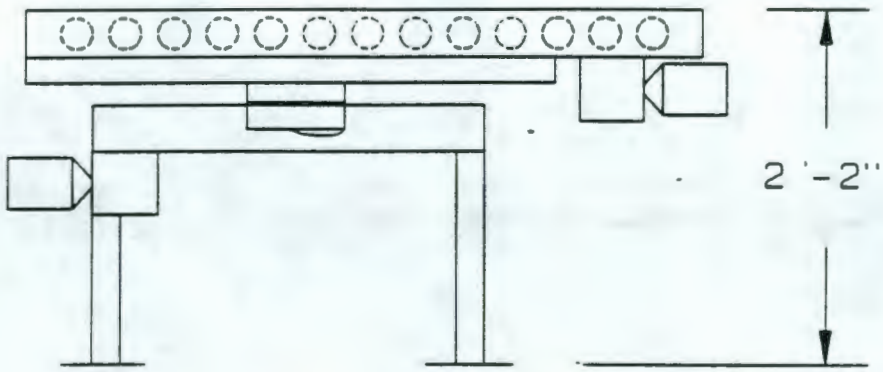

CONDITIONS OF SERVICE		DIMENSIONS	
APPLICATION: DRUM ROTATION TO FACILITATE DECONTAMINATION MONITORING		A:	F:
UNIT LOAD DESCRIPTION: 55 GALLON WASTE DRUMS		B:	G:
UNIT LOAD SIZE: 23.5" DIA X 34.5" HIGH	ROTATING TIME: 1/MIN	C:	H:
UNIT LOAD WEIGHT: 1,000 LBS		D:	I:
LOCATION: INDOORS		E:	J:
EQUIPMENT WILL BE HOSED DOWN			
TURNTABLE TO ROTATE THRU A 180° ARC @ RESET			
CONSTRUCTION			
TURNTABLE MATERIAL: A36	ROLLER CONVEYOR WIDTH: 30"		
TURNTABLE MOTOR HP:	ROLLER CONVEYOR LENGTH: 6'-4"		
MOTOR/REDUCER CONN: DIRECT	ROLLER SIZE: 2.5" DIA		
ELECTRIC CLASS: UNCLASSIFIED	ROLLER SPACING: 4"		
ELECTRIC ENCL: NEMA 4	ROLLER MATERIALS: 11 GA		
VOLTS/PH/HZ: 460/3/60	ROLLER RETENTION: SPRING/PIN		
DRIVE:	BEARING TYPE: BALL		
BRAKE:	MOTOR/REDUCER CONN: DIRECT		
	DRIVE TYPE: CHAIN-ROLLER TO ROLLER		
	CHAIN TYPE: NO. 60 ROLLER CHAIN		
	REDUCER TYPE: RA WORM GEAR		
	MOTOR HP: .75		

SECTION 14590

94-3227-0492

THIS PAGE INTENTIONALLY
LEFT BLANK

THIS PAGE INTENTIONALLY
LEFT BLANK

WRAP MODULE 2A

SPECIFICATION SECTION
FOR
14590 GROUTING AGENTS BULK STORAGE AND HANDLING

TABLE OF CONTENTS

PART 1 GENERAL

1.01 SECTION SCOPE
1.02 RELATED SECTIONS
1.03 REFERENCES
1.04 SYSTEM DESCRIPTION
1.05 SUBMITTALS
1.06 DELIVERY, STORAGE AND HANDLING
1.07 SITE CONDITIONS

PART 2 PRODUCTS

2.01 MANUFACTURERS
2.02 MATERIALS
2.03 EQUIPMENT
2.04 COMPONENTS
2.05 FABRICATION
2.06 SHOP QUALITY CONTROL

PART 3 EXECUTION

3.01 PREPARATION
3.02 ERECTION, INSTALLATION AND APPLICATION
3.03 FIELD QUALITY CONTROL
3.04 ADJUSTING AND CLEANING
3.05 DEMONSTRATION
3.06 PROTECTION

APPENDIX

APPENDIX A DATA SHEETS

WRAP MODULE 2A

SECTION 14590

GROUTING AGENTS BULK STORAGE AND HANDLING

PART 1 GENERAL

1.01 SECTION SCOPE

A. This specification establishes the requirements for detailed design, fabrication, installation, start-up, and acceptance testing of a complete system for receiving, storing, conveying and batching grouting agents, for waste drum grouting in WRAP2A module stabilization area.

1.02 RELATED SECTIONS

1.03 REFERENCES

A. Anti-Friction Bearing Manufacturer's Association (AFBMA)
AFBMA All applicable sections.

B. American National Standards Institute (ANSI)
ANSI All applicable sections.

C. American Society for Testing and Materials (ASTM)
ASTM All applicable sections.

D. American Welding Society (AWS)
AWS "Structural Welding Code"

E. Occupational Safety and Health Administration (OSHA)
OSHA 29 CFR Part 1910

F. Conveyor Equipment Manufacturers Association (CEMA)
CEMA All applicable sections.

G. National Electric Code (NEC)
NEC All applicable sections.

H. National Electric Manufacturers Association (NEMA)
NEMA MG-1 Motors and Generators

H. American Gear Manufacturers Association (AGMA)
AGMA All applicable sections.

I. Mechanical Power Transmission Association (MPTA)
MPTA ND 301 All applicable sections.

9413227.0494

J. ASME Boiler and Pressure Vessel Code (ASME)
ASME All applicable sections

1.04 SYSTEM DESCRIPTION

A. Bulk Ordinary Portland Cement (OPC), Blast Furnace Slag (BFS), Pulverized Fly Ash (PFA) and "Grout Additive" is trucked to the WRAP2A facility and pneumatically conveyed to bulk storage silos via individual lines. Bulk powder truck has its own on-board compressor for pneumatic conveying.

1. Material from each individual silo is then conveyed via air slide convs to a common dense phase pneumatic conveying system.

2. The four grouting materials above are then individually conveyed to the agitated grout or the virbo grout system. Diverter valves determine the two destinations.

3. In the vibro system the OPC, BFS and PFA are conveyed to individual dedicated silos. The "Grout Additive" is conveyed to the PFA silo if required. The OPC, BFS, PFA and "Grout Additive" are then gravity fed to individual weigh hoppers. This monitored/metered material is then conveyed via screw conveyors to a common mixing tank where respective grouting materials and are process water added. Prior to these dry materials being added, a metered amount of process water is injected into the mixing tank. A closed loop recirculation circuit is established with the grout mixing pump, and then the respective dry grouting materials are added. The rate of process water recirculation is sufficient to guarantee thorough mixing and negate any clumping of the dry grouting materials. After the respective dry ingredients are properly mixed with the process water, this "batch" is ready to be placed in the waste drum and vibrated.

4. In the agitated system, the OPC, BFS and PFA are conveyed to individual silos. The "Grout Additive" is conveyed to the surge hopper. OPC, BFS and PFA is then conveyed via screw conveyors to the surge hopper.

5. Respective feed to the surge hopper then passes to the powder blender and to the batch weigh hopper. Blended

9411227.0495

material is then conveyed to the "Agitated" waste drum.

B. Baghouse type dust collector is to be provided for fugitive dust from shredding activities.

C. Data Sheets

Equipment Tag Nos., WBS Area Location Numbers and equipment data sheets for this description are provided in **Appendix A.**

END OF SECTION

9413227.0496

WRAP MODULE 2A

APPENDIX A

EQUIPMENT/INSTRUMENT DATA SHEETS

WBS LOCATION	EQUIPMENT TAG	SERVICE
1105	T-05-101	Bulk Additive Silo
1105	T-05-102	Bulk PFA Silo
1105	T-05-103	Bulk BFS Silo
1105	T-05-104	Bulk OPC Silo
1105	S-05-101	Additive Silo Dust Collector
1105	S-05-102	PFA Silo Dust Collector
1105	S-05-103	BFS Silo Dust Collector
1105	S-05-104	OPC Silo Dust Collector
1105	C-05-101	Air Compressor Package
1105	P-05-101	Polymer Additive Pump
1105	T-05-201	OPC Day Silo
1105	T-05-202	OPC Weigh Hopper
1105	T-05-203	BFS Day Silo
1105	T-05-204	BFS Weigh Hopper
1105	T-05-205	BFS Silo
1105	T-05-206	PFA Silo
1105	T-05-207	Surge Hopper
1105	T-05-208	Blended Powder Batch Weigh Hopper
1105	T-05-209	OPC Silo
1105	T-05-210	PFA Day Silo
1105	T-05-211	PFA Weigh Hopper
1105	T-05-212	Wet Grout Mixing Tank
1105	S-05-201	OPC Silo Dust Collector
1105	S-05-203	BFS Silo Dust Collector
1105	S-05-205	BFS Silo Dust Collector
1105	S-05-206	PFA Silo Dust Collector

WRAP MODULE 2A

WBS LOCATION	EQUIPMENT TAG	SERVICE
1105	S-05-209	OPC Silo Dust Collector
1105	S-05-210	PFA Silo Dust Collector
1105	Y-05-201	OPC Silo Rotary Feeder
1105	Y-05-202	OPC Hopper Rotary Feeder
1105	Y-05-203	BFS Silo Rotary Feeder
1105	Y-05-204	BFS Hopper Rotary Feeder
1105	Y-05-205	BFS Rotary Feeder
1105	Y-05-206	PFA Rotary Feeder
1105	Y-05-207	Blended Power Rotary Feeder
1105	Y-05-208	Blender Powder Rotary Feeder
1105	Y-05-209	OPC Rotary Feeder
1105	Y-05-210	PFA Silo Rotary Feeder
1105	Y-05-211	PFA Hopper Rotary Feeder
1105	M-05-202	Powder Blender
1105	C-05-102	Additive Silo Dust Collector Fan
1105	C-05-103	PFA Silo Dust Collector Fan
1105	C-05-104	BFS Silo Dust Collector Fan
1105	C-05-105	OPC Silo Dust Collector Fan
1105	Y-05-101	Additive Rotary Feeder
1105	Y-05-102	PFA Rotary Feeder
1105	Y-05-103	BFS Rotary Feeder
1105	Y-05-104	OPC Rotary Feeder
1105	CV-05-101	Additive Air Slide Conveyor

9413227.0498

WRAP MODULE 2A

WBS LOCATION	EQUIPMENT TAG	SERVICE
1105	CV-05-102	PFA Air Slide Conveyor
1105	CV-05-103	BFA Air Slide Conveyor
1105	CV-05-104	OPC Air Slide Conveyor
1105	CV-05-202	OPC Screw Conveyor
1105	CV-05-204	BFS Screw Conveyor
1105	CV-05-205	BFS Screw Conveyor
1105	CV-05-206	PFA Screw Conveyor
1105	CV-05-208	OPC/BFS/PFA Screw Conveyor
1105	CV-05-209	OPC Screw Conveyor
1105	CV-05-211	PFA Screw Conveyor
1105	P-05-102	Dense Phase Pump
1104	S-04-101A,B	Off-Gas Dust Collector

9/1/92 0499

NO. VESSELS REQ'D. (☐ HORIZ - ☒ VERT.) 1	CUSTOMER: DOE-RL/WHC
SHELL DIA. ☒ I.D. - ☐ O.D.: 9'-3"	PROJECT: WRAP FACILITY MODULE 2A
SHELL THICKNESS: BY VENDOR	LOCATION: HANFORD, WA
HEADS THICKNESS: BY VENDOR	☒ CDR ☐ TITLE I ☐ TITLE II ☐ TITLE III
SHELL & HEAD THICKNESS INCLUDE C.A: BY VENDOR	
SHELL LENGTH (SEAM TO SEAM): 15'-0"	
SUPPORT: SKIRT - THICK - BY VENDOR	
CODE: DESIGN CONDITIONS:	

ITEM NO. T-05-101

	OPER.	DESIGN	ALLOW.
PRESS. (PSIG)	7-8	14.9	
TEMP. (°F)	60	100	

CORR. ALLOW. SHELL: HEADS:

X-RAY: STRESS RELIEF:

WINDLOAD: 70 MPH 1.07 IMPORTANCE FACTOR

MATERIALS: ALL MILD STEEL

HEADS:

SHELL: BOLTED CONSTRUCTION

NOZZLES & FLANGES: NITRILE

GASKETS:

NOZZLES & OPENINGS	NO.	SIZE-RATING-FACE
1. INLET	1	4" - 150 FF
2. DUST COLLECTOR	1	
3. MANWAY	1	
4. LEVEL CONTROL	3	1.25" - 6000 #
5. OUTLET	1	6" - 150 - FF
6.		
7		
8.		
9.		
10.		
11.		
12.		
13.		
14.		
15.		

INTERNALS & ACCESSORIES	FURNISHED BY VESSEL PAD.	FURNISHED BY OTHERS
FILTER ELEM.		
PACKING		
INSUL. RINGS		
LADDERS & PLATFORMS	BY VENDOR	

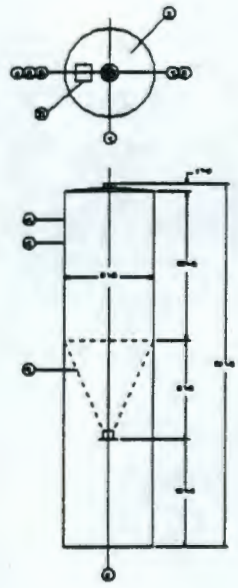

NOTES: 1. ALL COUPLING 6000#, UNLESS OTHERWISE

NO.	DATE	BY	REVISIONS

VESSEL: BULK ADDITIVE SILO

FOR:

PLANT:

LOCATION:

ORDER NO.: 6237.006 ITEM NO.:

MFGR.:

DATE: 05/12/92 BY: JPJ

UNITED ENGINEERS & CONSTRUCTORS
A Raytheon Company
Western Operations

UNITED ENGINEERS & CONSTRUCTORS A Raytheon Company Western Operations	EQUIPMENT DATA SHEET ☒ CDR ☐ TITLE I ☐ TITLE II ☐ TITLE III	ITEM NUMBER T-05-101	PAGE 1 OF 3
CUSTOMER & LOCATION DOE-RL/WHC HANFORD, WA	PROJECT WRAP FACILITY MODULE 2A	UE&C JOB NO. 6237.006	DATE: 05/21/92
		ACCOUNT NO.	BY: JPJ

REVISIONS (DATE & BY)	A		B		C		D	
	E		F		G		H	

SERVICE	MANUFACTURER	NO. REQ'D.	SOURCE OF QUOTE
BULK SOLIDS STORAGE SILO		1	

CONDITIONS OF SERVICE

1.	MATERIAL STORED		GYPSUM ($CaSO_4$)
2.	BULK DENSITY (FOR VOLUME)	PCF	70
3.	BULK DENSITY (FOR WEIGHT)	PCF	80
4.	PARTICLE SIZE RANGE		MINUS 100 MESH
5.	MOISTURE CONTENT	%	
6.	ANGLE OF REPOSE	DEG	40
7.	ABRASION		MILDLY
8.	CORROSION		
9.	ABSORPTION		
10.	EXPLOSION HAZARD		
11.	CEMA MATERIAL CODE (IF KNOWN)		70 A_{100} 35U
12.	MATERIAL TEMPERATURE (DES/OPER)	°F	100/60
13.	LOCATION (INDOOR/OUTDOOR)		OUTDOOR
14.	USEABLE CAPACITY	CU FT	960
15.	INTERNAL PRESSURE (DES/OPER)	PSIG	14.9/7-8
16.	WIND: (ANSI A53.1) TABLE/EXPOSURE/SPD		70 MPH, IMPORTANCE FACTOR = 1.07
17.	SEISMIC: (ANSI A58.1) ZONE		2B, IMPORTANC FACTORE = 1.25
18.	EXPLOSION VENTING DESIGN CRITERIA		
19.			
20.	FLOW RATE (IN/OUT)	CFH	750/100
21.	HOPPER DESIGN (MASS OR EXPANDED FLOW)		
22.	OTHER		
23.			
24.			
25.			

9413227.0501

UNITED ENGINEERS & CONSTRUCTORS A Raytheon Company Western Operations	EQUIPMENT DATA SHEET ☒ CDR ☐ TITLE I ☐ TITLE II ☐ TITLE III	ITEM NUMBER T-05-101	PAGE 2 OF 3

CUSTOMER & LOCATION	PROJECT	UE&C JOB NO.	DATE: 05/21/92
DOE-RL/WHC HANFORD, WA	WRAP FACILITY MODULE 2A	6237.006	
		ACCOUNT NO.	BY: JPJ

REVISIONS (DATE & BY)	A		B		C		D	
	E		F		G		H	

SERVICE	MANUFACTURER	NO. REQ'D.	SOURCE OF QUOTE
BULK SOLIDS STORAGE SILO		1	

DESIGN

26.	TOTAL VOLUME	CU FT	1140
27.	TYPE (WELDED OR BOLTED)		BOLTED
28.	SILO HEIGHT, HOPPER OUTLET TO ROOF	FT	24
29.	SILO INSIDE DIAMETER	FT	9'-2 5/8"
30.	HOPPER CONE ANGLE FROM HORIZONTAL	DEG	60
31.	SHELL MATERIAL/THICKNESS	-/IN	MILD STEEL/BY VENDOR
32.	HOPPER MATERIAL/THICKNESS	-/IN	MILD STEEL
33.	ROOM MATERIAL/THICKNESS	-/IN	
34.	CORROSION ALLOWANCE, SHELL/HOPPER	IN	
35.	HOPPER OUTLET SIZE/CONFIGURATION	IN	6" DIA
36.	MAXIMUM ALLOWABLE WORKING PRESSURE	PSIG	14.9
37.	MAXIMUM ALLOWABLE EXTERNAL ROOF LOAD	PSF	25
38.	OTHER: SNOW LOAD	PSF	20
39.			
40.			
41.			

9413227.0602

UNITED ENGINEERS & CONSTRUCTORS A Raytheon Company Western Operations	EQUIPMENT DATA SHEET ☒ CDR ☐ TITLE I ☐ TITLE II ☐ TITLE III	ITEM NUMBER T-05-209	PAGE 3 OF 3
CUSTOMER & LOCATION DOE-RL/WHC HANFORD, WA	PROJECT WRAP FACILITY MODULE 2A	UE&C JOB NO. 6237.006 ACCOUNT NO.	DATE: 05/12/92 BY: JPJ

REVISIONS (DATE & BY)	A		B		C		D	
	E		F		G		H	

SERVICE	MANUFACTURER	NO. REQ'D.	SOURCE OF QUOTE
OPC SILO		1	

ACCESSORIES

42.	HOPPER DISCHARGE DEVICE TYPE		ROTARY VALVE
43.	HOPPER DISCHARGE DEVICE CAPACITY	CFH	100
44.	SILO BIN VENT FILTER CAPACITY	ACFM	100
45.	SILO BIN VENT FILTER AND AIR TO CLOTH RATIO		
46.	EXPLOSION VENT TYPE		
47.	EXPLOSION VENT AREA REQUIRED	SQ FT	
348.	LADDERS/PLATFORMS		
49.			
50.	PRESSURE/VACUUM RELIEF DEVICE TYPE		
51.	PRESSUR/VACCUM RELIEF DEVICE CAPACITY	CFM	
52.	OTHER		LOAD CELLS
53.	(1) PADDLE TYPE ROTARY BIN LEVEL CONTROLLERS		
54.			
55.			

9143227.0503

NO. VESSELS REQ'D. (☐ HORIZ - ☒ VERT.) 1	CUSTOMER: DOE-RL/WHC
SHELL DIA. ☒ I.D. - ☐ O.D.: 6'-0"	PROJECT: WRAP FACILITY MODULE 2A
SHELL THICKNESS: BY VENDOR	LOCATION: HANFORD, WA
HEADS THICKNESS: BY VENDOR	☒ CDR ☐ TITLE I ☐ TITLE II ☐ TITLE
SHELL & HEAD THICKNESS INCLUDE C.A: BY VENDOR	
SHELL LENGTH (SEAM TO SEAM): 4'-4"	
SUPPORT: 3 LOAD CELLS @ KNUCKLE	
CODE: DESIGN CONDITIONS:	

ITEM NO. T-05-210

	OPER.	DESIGN	ALLOW.
PRESS. (PSIG)	7	14	
TEMP. (°F)	60	100	

CORR. ALLOW. SHELL: HEADS:

X-RAY: STRESS RELIEF:

WINDLOAD:

MATERIALS: ALL MILD STEEL

HEADS:

SHELL: BY VENDOR

NOZZLES & FLANGES:

GASKETS: NITRILE

NOZZLES & OPENINGS	NO.	SIZE-RATING-FACE
1. PFA INLET	1	2" - 150 - FF
2. ADDITIVE INLET		2" - 150 - FF
3. LOAD CELLS	3	
4. LEVEL CONTROL	3	1.25" - 6,000 #
5. OUTLET	1	6" - 150 - FF
6. DUST COLLECTOR	1	
7		
8.		
9.		
10.		
11.		
12.		
13.		
14.		
15.		

INTERNALS & ACCESSORIES	FURNISHED BY VESSEL PAD.	OTHERS
FILTER ELEM.		
PACKING		
VESSEL WEIGHT		LB EST
LADDERS & PLATFORMS		

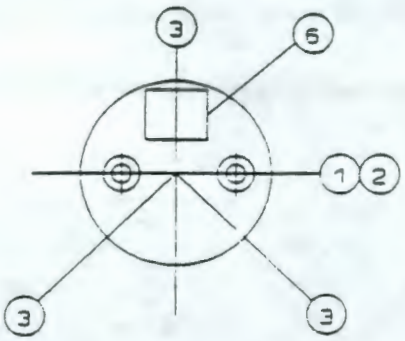

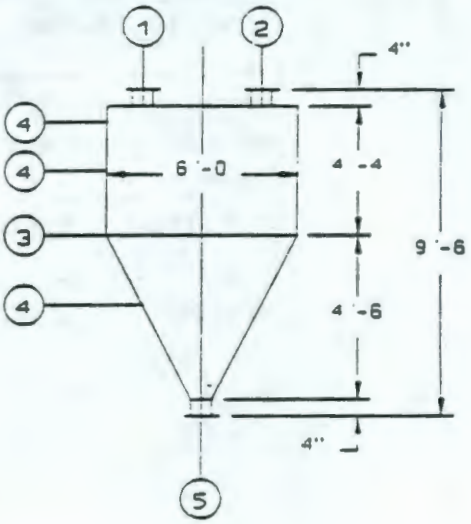

NOTES: 1. ALL COUPLING 6000#, UNLESS OTHERWISE

NO.	DATE	BY	REVISIONS

VESSEL: PFA DAY SILO

FOR:

PLANT:

LOCATION:

ORDER NO.: 6237.006 ITEM NO.:

MFGR.:

UNITED ENGINEERS & CONSTRUCTC
A Raytheon Comp
Western Operations

DATE: 07/28/92 BY: JPJ

9413227.0504

UNITED ENGINEERS & CONSTRUCTORS A Raytheon Company Western Operations	EQUIPMENT DATA SHEET ☒ CDR ☐ TITLE I ☐ TITLE II ☐ TITLE III	ITEM NUMBER T-06-102	PAGE 1 OF 3
CUSTOMER & LOCATION DOE-RL/WHC HANFORD, WA	PROJECT WRAP FACILITY MODULE 2A	UE&C JOB NO. 6237.006 / ACCOUNT NO.	DATE: 06/12/92 / BY: JPJ

REVISIONS (DATE & BY)	A		B		C		D	
	E		F		G		H	

SERVICE	MANUFACTURER	NO. REQ'D.	SOURCE OF QUOTE
BULK SOLIDS STORAGE SILO		1	

CONDITIONS OF SERVICE

1.	MATERIAL STORED		PULVERIZED FLY ASH (PFA)
2.	BULK DENSITY (FOR VOLUME)	PCF	40
3.	BULK DENSITY (FOR WEIGHT)	PCF	45
4.	PARTICLE SIZE RANGE		MINUS 100 MESH
5.	MOISTURE CONTENT	%	
6.	ANGLE OF REPOSE	DEG	42
7.	ABRASION		MILDLY ABRASIVE
8.	CORROSION		NONE
9.	ABSORPTION		
10.	EXPLOSION HAZARD		NONE
11.	CEMA MATERIAL CODE (IF KNOWN)		40 A_{ve} 25
12.	MATERIAL TEMPERATURE (DES/OPER)	°F	100/60
13.	LOCATION (INDOOR/OUTDOOR)		OUTDOOR
14.	USEABLE CAPACITY	CU FT	3,970
15.	INTERNAL PRESSURE (DES/OPER)	PSIG	14.9/7-8
16.	WIND: (ANSI A53.1) TABLE/EXPOSURE/SPD		70 MPH, IMPORTANCE FACTOR = 1.07
17.	SEISMIC: (ANSI A58.1) ZONE		2B, IMPORTANCE FACTOR = 1.25
18.	EXPLOSION VENTING DESIGN CRITERIA		N/A
19.			
20.	FLOW RATE (IN/OUT)	CFH	1,400/150
21.	HOPPER DESIGN (MASS OR EXPANDED FLOW)		
22.	OTHER		
23.			
24.			
25.			

9413227.0505

UNITED ENGINEERS & CONSTRUCTORS A Raytheon Company Western Operations	EQUIPMENT DATA SHEET ☒ CDR ☐ TITLE I ☐ TITLE II ☐ TITLE III	ITEM NUMBER T-06-102	PAGE 2 OF 3

CUSTOMER & LOCATION	PROJECT	UE&C JOB NO. 6237.006	DATE: 06/12/92
DOE-RL/WHC HANFORD, WA	WRAP FACILITY MODULE 2A	ACCOUNT NO.	BY: JPJ

REVISIONS (DATE & BY)	A		B		C		D	
	E		F		G		H	

SERVICE	MANUFACTURER	NO. REQ'D.	SOURCE OF QUOTE
BULK SOLIDS STORAGE SILO		1	

DESIGN

26.	TOTAL VOLUME	CU FT	5,450
27.	TYPE (WELDED OR BOLTED)		BOLTED
28.	SILO HEIGHT, HOPPER OUTLET TO ROOF	FT	31
29.	SILO INSIDE DIAMETER	FT	16'-5 1/2"
30.	HOPPER CONE ANGLE FROM HORIZONTAL	DEG.	60
31.	SHELL MATERIAL/THICKNESS	-/IN	MILD STEEL/BY VENDOR
32.	HOPPER MATERIAL/THICKNESS	-/IN	MILD STEEL/BY VENDOR
33.	ROOM MATERIAL/THICKNESS	-/IN	
34.	CORROSION ALLOWANCE, SHELL/HOPPER	IN	N/A
35.	HOPPER OUTLET SIZE/CONFIGURATION	IN	6" DIA
36.	MAXIMUM ALLOWABLE WORKING PRESSURE	PSIG	14.9
37.	MAXIMUM ALLOWABLE EXTERNAL ROOF LOAD	PSF	25
38.	OTHER SNOW LOAD:	PSF	20
39.			
40.			
41.			

UNITED ENGINEERS & CONSTRUCTORS A Raytheon Company Western Operations	EQUIPMENT DATA SHEET ☒ CDR ☐ TITLE I ☐ TITLE II ☐ TITLE III	ITEM NUMBER T-05-102	PAGE 3 OF 3
CUSTOMER & LOCATION DOE-RL/WHC HANFORD, WA	PROJECT WRAP FACILITY MODULE 2A	UE&C JOB NO. 6237.006	DATE: 05/12/92
		ACCOUNT NO.	BY: JPJ

REVISIONS (DATE & BY)	A		B		C		D	
	E		F		G		H	

SERVICE	MANUFACTURER	NO. REQ'D.	SOURCE OF QUOTE
BULK SOLIDS STORAGE SILO		1	

ACCESSORIES

42.	HOPPER DISCHARGE DEVICE TYPE		ROTARY VALVE
43.	HOPPER DISCHARGE DEVICE CAPACITY	CFH	1.50
44.	SILO BIN VENT FILTER CAPACITY	ACFM	60
45.	SILO BIN VENT FILTER AIR TO CLOTH RATIO		3.2
46.	EXPLOSION VENT TYPE		N/A
47.	EXPLOSION VENT AREA REQUIRED	SQ FT	N/A
348.	LADDERS/PLATFORMS		BY VENDOR
49.			
50.	PRESSURE/VACUUM RELIEF DEVICE TYPE		N/A
51.	PRESSUR/VACCUM RELIEF DEVICE CAPACITY	CFM	N/A
52.	OTHER		
53.			
54.			
55.			

9413227.0507

NO. VESSELS REQ'D. (☐ HORIZ - ☒ VERT.) 1	CUSTOMER: DOE-RL/WHC	ITEM NO. T-05-103
SHELL DIA. ☒ I.D. - ☐ O.D.: 18'-5.5"	PROJECT: WRAP FACILITY MODULE 2A	
SHELL THICKNESS: BY VENDOR	LOCATION: HANFORD, WA	
HEADS THICKNESS: BY VENDOR	☒ CDR ☐ TITLE I ☐ TITLE II ☐ TITLE III	

SHELL & HEAD THICKNESS INCLUDE C.A: BY VENDOR

SHELL LENGTH (SEAM TO SEAM): 15'-0"

SUPPORT: SKIRT - THICK BY VENDOR

CODE: DESIGN CONDITIONS:

	OPER.	DESIGN	ALLOW.
PRESS. (PSIG)	7-8	14.9	
TEMP. (°F)	60	100	

CORR. ALLOW. SHELL: HEADS:

X-RAY: STRESS RELIEF:

WINDLOAD: 70 MPH 1.07 IMPORTANCE FACTOR

MATERIALS: MILD STEEL

HEADS:

SHELL:

NOZZLES & FLANGES:

GASKETS: NITRILE

NOZZLES & OPENINGS	NO.	SIZE-RATING-FACE
1. INLET	1	4" - 150 - FF
2. DUST COLLECTOR	1	
3. MANWAY	1	
4. LEVEL CONTROL	3	1.25" - 6000 #
5. OUTLET	1	6" - 150 - FF
6.		
7		
8.		
9.		
10.		
11.		
12.		
13.		
14.		
15.		

INTERNALS & ACCESSORIES	FURNISHED BY VESSEL PAD.	OTHERS
FILTER ELEM.		
PACKING		
INSUL. RINGS		
LADDERS & PLATFORMS	BY VENDOR	

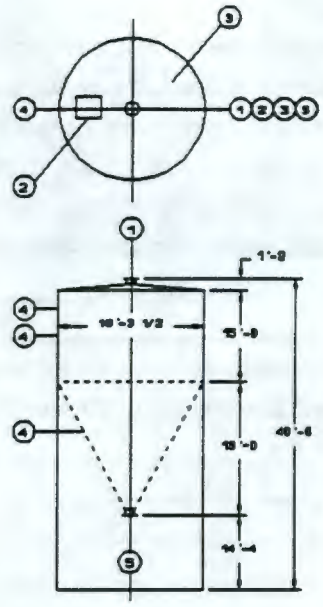

NOTES: 1. ALL COUPLING 6000#, UNLESS OTHERWISE

NO.	DATE	BY	REVISIONS

VESSEL:

FOR:

PLANT:

LOCATION:

ORDER NO.: 6237.006 ITEM NO.:

MFGR.:

DATE: 06/12/92 BY: JPJ

UNITED ENGINEERS & CONSTRUCTORS
A Raytheon Company
Western Operations

UNITED ENGINEERS & CONSTRUCTORS A Raytheon Company Western Operations	EQUIPMENT DATA SHEET ☒ CDR ☐ TITLE I ☐ TITLE II ☐ TITLE III	ITEM NUMBER T-06-103	PAGE 1 OF 3
CUSTOMER & LOCATION DOE-RL/WHC HANFORD, WA	PROJECT WRAP FACILITY MODULE 2A	UE&C JOB NO. 6237.006 ACCOUNT NO.	DATE: 04/23/92 BY: SMM

REVISIONS (DATE & BY)	A		B		C		D	
	E		F		G		H	

SERVICE	MANUFACTURER	NO. REQ'D.	SOURCE OF QUOTE
BULK SOLIDS STORAGE SILO		1	

CONDITIONS OF SERVICE

1.	MATERIAL STORED		BLAST FURNACE SLAG (BFS)
2.	BULK DENSITY (FOR VOLUME)	PCF	60
3.	BULK DENSITY (FOR WEIGHT)	PCF	70
4.	PARTICLE SIZE RANGE		< 1/8"
5.	MOISTURE CONTENT	%	
6.	ANGLE OF REPOSE	DEG	25
7.	ABRASION		VERY ABRASIVE
8.	CORROSION		NONE
9.	ABSORPTION		
10.	EXPLOSION HAZARD		NONE
11.	CEMA MATERIAL CODE (IF KNOWN)		60 D, 37
12.	MATERIAL TEMPERATURE (DES/OPER)	°F	100/60
13.	LOCATION (INDOOR/OUTDOOR)		OUTDOOR
14.	USEABLE CAPACITY	CU FT	4,700
15.	INTERNAL PRESSURE (DES/OPER)	PSIG	14.9/7-8
16.	WIND: (ANSI A53.1) TABLE/EXPOSURE/SPD		70 MPH, IMPORTANCE FACTOR = 1.07
17.	SEISMIC: (ANSI A58.1) ZONE		2B, IMPORTANCE FACTOR = 1.25
18.	EXPLOSION VENTING DESIGN CRITERIA		N/A
19.			
20.	FLOW RATE (IN/OUT)	CFH	
21.	HOPPER DESIGN (MASS OR EXPANDED FLOW)		
22.	OTHER		
23.			
24.			
25.			

9413227.0509

UNITED ENGINEERS & CONSTRUCTORS A Raytheon Company Western Operations	EQUIPMENT DATA SHEET ☒ CDR ☐ TITLE I ☐ TITLE II ☐ TITLE III	ITEM NUMBER T-05-103	PAGE 2 OF 3

CUSTOMER & LOCATION	PROJECT	UE&C JOB NO. 6237.006	DATE: 06/12/92
DOE-RL/WHC HANFORD, WA	WRAP FACILITY MODULE 2A	ACCOUNT NO.	BY: JPJ

REVISIONS (DATE & BY)	A		B		C		D	
	E		F		G		H	

SERVICE	MANUFACTURER	NO. REQ'D.	SOURCE OF QUOTE
BULK SOLIDS STORAGE SILO		1	

DESIGN

26.	TOTAL VOLUME	CU FT	5,450
27.	TYPE (WELDED OR BOLTED)		BOLTED
28.	SILO HEIGHT, HOPPER OUTLET TO ROOF	FT	31
29.	SILO INSIDE DIAMETER	FT	18'-5 1/2"
30.	HOPPER CONE ANGLE FROM HORIZONTAL	DEG	60
31.	SHELL MATERIAL/THICKNESS	-/IN	MILD STEEL/BY VENDOR
32.	HOPPER MATERIAL/THICKNESS	-/IN	MILD STEEL/BY VENDOR
33.	ROOM MATERIAL/THICKNESS	-/IN	
34.	CORROSION ALLOWANCE, SHELL/HOPPER	IN	N/A
35.	HOPPER OUTLET SIZE/CONFIGURATION	IN	6" DIA
36.	MAXIMUM ALLOWABLE WORKING PRESSURE	PSIG	14.9
37.	MAXIMUM ALLOWABLE EXTERNAL ROOF LOAD	PSF	25
38.	OTHER SNOW LOAD:	PSF	20
39.			
40.			
41.			

9413227.0510

UNITED ENGINEERS & CONSTRUCTORS A Raytheon Company Western Operations	EQUIPMENT DATA SHEET ☒ CDR ☐ TITLE I ☐ TITLE II ☐ TITLE III	ITEM NUMBER T-05-103	PAGE 3 OF 3

CUSTOMER & LOCATION	PROJECT	UE&C JOB NO. 6237.006	DATE: 05/12/92
DOE-RL/WHC HANFORD, WA	WRAP FACILITY MODULE 2A	ACCOUNT NO.	BY: JPJ

REVISIONS (DATE & BY)	A		B		C		D	
	E		F		G		H	

SERVICE	MANUFACTURER	NO. REQ'D.	SOURCE OF QUOTE
BULK SOLIDS STORAGE SILO		1	

ACCESSORIES

42.	HOPPER DISCHARGE DEVICE TYPE		ROTARY VALVE
43.	HOPPER DISCHARGE DEVICE CAPACITY	CFH	150
44.	SILO BIN VENT FILTER CAPACITY	ACFM	60
45.	SILO BIN VENT FILTER AIR TO CLOTH RATIO		3.2
46.	EXPLOSION VENT TYPE		N/A
47.	EXPLOSION VENT AREA REQUIRED	SQ FT	N/A
348.	LADDERS/PLATFORMS		BY VENDOR
49.			
50.	PRESSURE/VACUUM RELIEF DEVICE TYPE		N/A
51.	PRESSUR/VACCUM RELIEF DEVICE CAPACITY	CFM	N/A
52.	OTHER		
53.			
54.			
55.			

9413227.0511

NO. VESSELS REQ'D. (☐ HORIZ - ☒ VERT.) 1	CUSTOMER: DOE-RL/WHC
SHELL DIA. ☒ I.D. - ☐ O.D.: 9'-3"	PROJECT: WRAP FACILITY MODULE 2A
SHELL THICKNESS: BY VENDOR	LOCATION: HANFORD, WA
HEADS THICKNESS: BY VENDOR	☒ CDR ☐ TITLE I ☐ TITLE II ☐ TITLE III

ITEM NO. T-05-104

SHELL & HEAD THICKNESS INCLUDE C.A: BY VENDOR

SHELL LENGTH (SEAM TO SEAM): 15'-0"

SUPPORT: SKIRT - THICK - BY VENDOR

CODE: DESIGN CONDITIONS:

	OPER.	DESIGN	ALLOW.
PRESS. (PSIG)	7-8	14.9	
TEMP. (°F)	60	100	

CORR. ALLOW. SHELL: HEADS:

X-RAY: STRESS RELIEF:

WINDLOAD: 70 MPH 1.07 IMPORTANCE FACTOR

MATERIALS: ALL MILD STEEL

HEADS:

SHELL: BOLTED CONSTRUCTION

NOZZLES & FLANGES: NITRILE

GASKETS:

NOZZLES & OPENINGS	NO.	SIZE-RATING-FACE
1. INLET	1	4" - 150 FF
2. DUST COLLECTOR	1	
3. MANWAY	1	
4. LEVEL CONTROL	3	1.25" - 6000 #
5. OUTLET	1	6" - 150 - FF
6.		
7		
8.		
9.		
10.		
11.		
12.		
13.		
14.		
15.		

INTERNALS & ACCESSORIES	FURNISHED BY VESSEL PAD.	OTHERS
FILTER ELEM.		
PACKING		
INSUL. RINGS		
LADDERS & PLATFORMS	BY VENDOR	

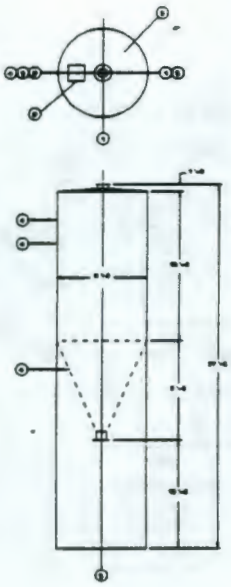

NOTES: 1. ALL COUPLING 6000#, UNLESS OTHERWISE

NO.	DATE	BY	REVISIONS

VESSEL: BULK OPC SILO

FOR:

PLANT:

LOCATION:

ORDER NO.: 6237.006 ITEM NO.:

MFGR.:

DATE: 05/21/92 BY: JPJ

UNITED ENGINEERS & CONSTRUCTORS
A Raytheon Company
Western Operations

UNITED ENGINEERS & CONSTRUCTORS A Raytheon Company Western Operations	EQUIPMENT DATA SHEET ☒ CDR ☐ TITLE I ☐ TITLE II ☐ TITLE III	ITEM NUMBER T-06-104	PAGE 1 OF 3
CUSTOMER & LOCATION DOE-RL/WHC HANFORD, WA	PROJECT WRAP FACILITY MODULE 2A	UE&C JOB NO. 6237.006	DATE: 05/21/92
		ACCOUNT NO.	BY: JPJ

REVISIONS (DATE & BY)	A		B		C		D	
	E		F		G		H	

SERVICE	MANUFACTURER	NO. REQ'D.	SOURCE OF QUOTE
BULK SOLIDS STORAGE SILO		1	

CONDITIONS OF SERVICE

1.	MATERIAL STORED		ORDINARY PORTLAND CEMENT (OPC)
2.	BULK DENSITY (FOR VOLUME)	PCF	80
3.	BULK DENSITY (FOR WEIGHT)	PCF	100
4.	PARTICLE SIZE RANGE		< 100 MESH
5.	MOISTURE CONTENT	%	
6.	ANGLE OF REPOSE	DEG	30-44
7.	ABRASION		MILDLY ABRASIVE
8.	CORROSION		NO
9.	ABSORPTION		
10.	EXPLOSION HAZARD		
11.	CEMA MATERIAL CODE (IF KNOWN)		80 A_{100} 26M
12.	MATERIAL TEMPERATURE (DES/OPER)	°F	100/60
13.	LOCATION (INDOOR/OUTDOOR)		OUTDOOR
14.	USEABLE CAPACITY	CU FT	800
15.	INTERNAL PRESSURE (DES/OPER)	PSIG	14.9/7-8
16.	WIND: (ANSI A53.1) TABLE/EXPOSURE/SPD		70 MPH, IMPORTANCE FACTOR = 1.07
17.	SEISMIC: (ANSI A58.1) ZONE		2B, IMPORTANCE FACTOR = 1.25
18.	EXPLOSION VENTING DESIGN CRITERIA		
19.			
20.	FLOW RATE (IN/OUT)	CFH	750/100
21.	HOPPER DESIGN (MASS OR EXPANDED FLOW)		
22.	OTHER		
23.			
24.			
25.			

9413227.0513

UNITED ENGINEERS & CONSTRUCTORS A Raytheon Company Western Operations	EQUIPMENT DATA SHEET ☒ CDR ☐ TITLE I ☐ TITLE II ☐ TITLE III	ITEM NUMBER T-05-104	PAGE 2 OF 3

CUSTOMER & LOCATION	PROJECT	UE&C JOB NO. 6237.006	DATE: 05/21/92
DOE-RL/WHC HANFORD, WA	WRAP FACILITY MODULE 2A	ACCOUNT NO.	BY: JPJ

REVISIONS (DATE & BY)	A		B		C		D	
	E		F		G		H	

SERVICE	MANUFACTURER	NO. REQ'D.	SOURCE OF QUOTE
BULK SOLIDS STORAGE SILO		1	

DESIGN

26.	TOTAL VOLUME	CU FT	1140
27.	TYPE (WELDED OR BOLTED)		BOLTED
28.	SILO HEIGHT, HOPPER OUTLET TO ROOF	FT	24
29.	SILO INSIDE DIAMETER	FT	9'-2 5/8"
30.	HOPPER CONE ANGLE FROM HORIZONTAL	DEG	60
31.	SHELL MATERIAL/THICKNESS	-/IN	MILD STEEL/BY VENDOR
32.	HOPPER MATERIAL/THICKNESS	-/IN	MILD STEEL/BY VENDOR
33.	ROOM MATERIAL/THICKNESS	-/IN	
34.	CORROSION ALLOWANCE, SHELL/HOPPER	IN	
35.	HOPPER OUTLET SIZE/CONFIGURATION	IN	6" DIA
36.	MAXIMUM ALLOWABLE WORKING PRESSURE	PSIG	14.9
37.	MAXIMUM ALLOWABLE EXTERNAL ROOF LOAD	PSF	25
38.	OTHER: SNOW LOAD	PSF	20
39.			
40.			
41.			

9413227.0514

UNITED ENGINEERS & CONSTRUCTORS A Raytheon Company Western Operations	EQUIPMENT DATA SHEET ☒ CDR ☐ TITLE I ☐ TITLE II ☐ TITLE III	ITEM NUMBER T-05-104	PAGE 3 OF 3
CUSTOMER & LOCATION DOE-RL/WHC HANFORD, WA	PROJECT WRAP FACILITY MODULE 2A	UE&C JOB NO. 6237.006	DATE: 05/21/92
		ACCOUNT NO.	BY: JPJ

REVISIONS (DATE & BY)	A		B		C		D	
	E		F		G		H	

SERVICE	MANUFACTURER	NO. REQ'D.	SOURCE OF QUOTE
BULK SOLIDS STORAGE SILO		1	

ACCESSORIES

42.	HOPPER DISCHARGE DEVICE TYPE		ROTARY VALVE
43.	HOPPER DISCHARGE DEVICE CAPACITY	CFH	100 CFH
44.	SILO BIN VENT FILTER CAPACITY	ACFM	30
45.	SILO BIN VENT FILTER AND AIR TO CLOTH RATIO		6.4:1
46.	EXPLOSION VENT TYPE		
47.	EXPLOSION VENT AREA REQUIRED	SQ FT	
348.	LADDERS/PLATFORMS		BY VENDOR
49.			
50.	PRESSURE/VACUUM RELIEF DEVICE TYPE		
51.	PRESSUR/VACCUM RELIEF DEVICE CAPACITY	CFM	
52.	OTHER		
53.			
54.			
55.			

9413227.0515

UNITED ENGINEERS & CONSTRUCTORS A Raytheon Company Western Operations	EQUIPMENT DATA SHEET ☒ CDR ☐ TITLE I ☐ TITLE II ☐ TITLE III	ITEM NUMBER S-05-101	PAGE 1 OF 1
CUSTOMER & LOCATION: DOE-RL/WHC HANFORD, WA	PROJECT: WRAP FACILITY MODULE 2A	UE&C JOB NO. 6237.006	DATE: 05/01/92
		ACCOUNT NO.	BY: JPJ

REVISIONS (DATE & BY)								
	A		B		C		D	
	E		F		G		H	

SERVICE	MANUFACTURER	NO. REQ'D	SOURCE OF QUOTE
ADDITIVE SILO DUST COLLECTOR		1	

TYPE & MODEL: PULSE-JET

CONDITIONS OF SERVICE

DUST OR MATERIAL HANDLED: GROUT ADDITIVE (GYPSUM - $CaSo_4$)

MATERIAL MASS FLOW RATE:	10 LB./HR.		
MATERIAL BULK DENSITY:	70 LB./CU.FT.		
MATERIAL CHARACTERISTICS	☒ DRY	☒ ALKALINE	☐ NEUTRAL	☐ SPARKS
	☐ DAMP	☐ ACID	☐ ABRASIVE	☐ TOXIC
CONVEYING MEDIUM	TYPE FLUID: AIR	FLOW	30 ACFM
	TEMPERATURE: AMBIENT	RELATIVE HUMIDITY:	15 %
MATERIAL CONCENTRATION:	10 GR./CU.FT.	MINIMUM EXPLOSIVE CONCENTRATION:	N/A OZ./CU.FT.
LIMITING O_2 CONCENTRATION:	%	INLET PRESSURE:	(PSIA)($^1H_2OABS$)

TEMPERATURE OF DUST LADEN GAS AT DUST POINTS: AMBIENT

LOCATION	☐ INDOORS	☒ OUTDOORS	ALTITUDE: 710 AMSL FT.
SERVICE	☐ CONTINUOUS	☒ INTERMITTENT	☒ DUST RECOVERY ☐ DUST REMOVAL

DUST MATERIAL DISCHARGED TO: T-05-101 SILO

CONSTRUCTION & SPECIFICATIONS

MATERIALS OF CONSTRUCTION	DUST SIDE:	CLEAN SIDE PLENUM:	
	BAG FELT:	BAG CAGES:	
DESIGN PRESSURE:	PSIG	DESIGN TEMPERATURE:	9°F TO 101°F
SHELL THICKNESS:	IN.	TOP THICKNESS:	IN.
DUST DISPOSAL	☐ COLLECTOR WITH MATERIAL HOPPER	☒ COLLECTOR WITH BIN VENT & MOUNTING FLANGE	
	☐ MECHANICAL SHAKER TYPE	☒ REVERSE JET BLOWDOWN TYPE	
	OTHER:		

INLET CONN.	SIZE:	RATING:	LOCATION:	
GAS DISCH. CONN.	SIZE:	RATING:	LOCATION:	
DUST DISCH.	SIZE:	RATING:	LOCATION:	
DISCH. VALVE	☐ ROTARY VALVE-REF. PAGE:	☐ SLIDE GATE	☐ VENDOR SUPPLIED	☐ PURCHASER SUPPLIED

PRESSURE DROP (INLET-GAS DISCH.) NORMAL:	(PSI)(^1H_2O), MAXIMUM:		(PSI)(^1H_2O)
PRESSURE DROP (DUST SIDE-PLENUM) NORMAL:	(PSI)(^1H_2O), MAXIMUM:		(PSI)(^1H_2O)
FILTRATION EFFICIENCY:	%	NO. OF BAGS:	LENGTH: DIA:
FILTER SURFACE AREA:	SQ. FT.	FILTER RATIO:	CFM/SQ. FT.
GAS VELOCITY THROUGH COLLECTOR:	FPS	DUST HOPPER CAPACITY:	CU.FT.
AIR PRESSURE AVAILABLE:	PSIG	ELEC. AVAIL: ☐ DC ☒ AC	VOLT/PHASE/HERTZ: 460/ 3 /60

HIGH LEVEL IND.	TYPE:	☐ VENDOR SUPPLIES	☐ PURCHASER SUPPLIED
PILOT VALVES	MFG:	TYPE:	ENCLOSURE:
TIMER	MFG:	TYPE:	ENCLOSURE:
OVERALL SIZE	LENGTH:	WIDTH:	HEIGHT:

REMARKS:

UNITED ENGINEERS & CONSTRUCTORS A Raytheon Company Western Operations	EQUIPMENT DATA SHEET ☒ CDR ☐ TITLE I ☐ TITLE II ☐ TITLE III	ITEM NUMBER S-05-102	PAGE 1 OF 1
CUSTOMER & LOCATION DOE-RL/WHC HANFORD, WA	PROJECT WRAP FACILITY MODULE 2A	UE&C JOB NO. 6237.006	DATE: 05/01/92
		ACCOUNT NO.	BY: JPJ

REVISIONS (DATE & BY)	A		B		C		D	
	E		F		G		H	

SERVICE	MANUFACTURER	NO. REQ'D	SOURCE OF QUOTE
PFA SILO DUST COLLECTOR		1	

TYPE & MODEL: PULSE-SET BIN VENT

CONDITIONS OF SERVICE

DUST OR MATERIAL HANDLED: PULVERIZED FLY ASH (PFA)			
MATERIAL MASS FLOW RATE: 30 LB./HR.			
MATERIAL BULK DENSITY: 40 LB./CU.FT.			
MATERIAL CHARACTERISTICS	☒ DRY	☐ ALKALINE	☒ NEUTRAL ☐ SPARKS
	☐ DAMP	☐ ACID	☐ ABRASIVE ☐ TOXIC
CONVEYING MEDIUM	TYPE FLUID: AIR	FLOW 60 ACFM	
	TEMPERATURE: AMBIENT	RELATIVE HUMIDITY: 15 %	
MATERIAL CONCENTRATION: 10 GR./CU.FT.		MINIMUM EXPLOSIVE CONCENTRATION: N/A OZ./CU.FT.	
LIMITING O_2 CONCENTRATION: %		INLET PRESSURE: (PSIA)($^1H_2OABS$)	
TEMPERATURE OF DUST LADEN GAS AT DUST POINTS: AMBIENT			
LOCATION	☐ INDOORS	☒ OUTDOORS	ALTITUDE: 710 AMSL FT.
SERVICE	☐ CONTINUOUS	☒ INTERMITTENT	☒ DUST RECOVERY ☐ DUST REMOVAL
DUST MATERIAL DISCHARGED TO: T-05-102 SILO			

CONSTRUCTION & SPECIFICATIONS

MATERIALS OF CONSTRUCTION	DUST SIDE:	CLEAN SIDE PLENUM:	
	BAG FELT:	BAG CAGES:	
DESIGN PRESSURE: PSIG		DESIGN TEMPERATURE: 9°F TO 101°F	
SHELL THICKNESS: IN.		TOP THICKNESS: IN.	
DUST DISPOSAL	☐ COLLECTOR WITH MATERIAL HOPPER	☒ COLLECTOR WITH BIN VENT & MOUNTING FLANGE	
	☐ MECHANICAL SHAKER TYPE	☒ REVERSE JET BLOWDOWN TYPE	
	OTHER:		
INLET CONN.	SIZE:	RATING:	LOCATION:
GAS DISCH. CONN.	SIZE:	RATING:	LOCATION:
DUST DISCH.	SIZE:	RATING:	LOCATION:
DISCH. VALVE	☐ ROTARY VALVE-REF. PAGE:	☐ SLIDE GATE	☐ VENDOR SUPPLIED ☐ PURCHASER SUPPLIED
PRESSURE DROP (INLET-GAS DISCH.) NORMAL: (PSI)(^1H_2O), MAXIMUM: (PSI)(^1H_2O)			
PRESSURE DROP (DUST SIDE-PLENUM) NORMAL: (PSI)(^1H_2O), MAXIMUM: (PSI)(^1H_2O)			
FILTRATION EFFICIENCY: %		NO. OF BAGS:	LENGTH: DIA:
FILTER SURFACE AREA: SQ. FT.		FILTER RATIO: CFM/SQ. FT.	
GAS VELOCITY THROUGH COLLECTOR: FPS		DUST HOPPER CAPACITY: CU.FT.	
AIR PRESSURE AVAILABLE: PSIG		ELEC. AVAIL: ☐ DC ☒ AC	VOLT/PHASE/HERTZ: 460/ 3 /60
HIGH LEVEL IND.	TYPE:	☐ VENDOR SUPPLIES	☐ PURCHASER SUPPLIED
PILOT VALVES	MFG:	TYPE:	ENCLOSURE:
TIMER	MFG:	TYPE:	ENCLOSURE:
OVERALL SIZE	LENGTH:	WIDTH:	HEIGHT:

REMARKS:

9413227.0517

UNITED ENGINEERS & CONSTRUCTORS A Raytheon Company Western Operations	EQUIPMENT DATA SHEET ☒ CDR ☐ TITLE I ☐ TITLE II ☐ TITLE III	ITEM NUMBER S-05-103	PAGE 1 OF 1
CUSTOMER & LOCATION: DOE-RL/WHC HANFORD, WA	PROJECT: WRAP FACILITY MODULE 2A	UE&C JOB NO. 6237.006	DATE: 05/01/92
		ACCOUNT NO.	BY: JPJ

REVISIONS (DATE & BY)	A		B		C		D	
	E		F		G		H	

SERVICE	MANUFACTURER	NO. REQ'D	SOURCE OF QUOTE
BFS SILO DUST COLLECTOR		1	

TYPE & MODEL: PULSE-JET

CONDITIONS OF SERVICE

DUST OR MATERIAL HANDLED: BLAST FURNACE SLAG (BFS)

MATERIAL MASS FLOW RATE: 30 LB./HR.

MATERIAL BULK DENSITY: 60 LB./CU.FT.

MATERIAL CHARACTERISTICS: ☒ DRY ☐ ALKALINE ☒ NEUTRAL ☐ SPARKS ☐ DAMP ☐ ACID ☒ ABRASIVE ☐ TOXIC

CONVEYING MEDIUM: TYPE FLUID: AIR — FLOW: 60 ACFM; TEMPERATURE: AMBIENT — RELATIVE HUMIDITY: 15 %

MATERIAL CONCENTRATION: 10 GR./CU.FT. — MINIMUM EXPLOSIVE CONCENTRATION: N/A OZ./CU.FT.

LIMITING O_2 CONCENTRATION: % — INLET PRESSURE: (PSIA)('H_2OABS)

TEMPERATURE OF DUST LADEN GAS AT DUST POINTS: AMBIENT

LOCATION: ☐ INDOORS ☒ OUTDOORS — ALTITUDE: 710 AMSL FT.

SERVICE: ☐ CONTINUOUS ☒ INTERMITTENT ☒ DUST RECOVERY ☐ DUST REMOVAL

DUST MATERIAL DISCHARGED TO: T-05-103 SILO

CONSTRUCTION & SPECIFICATIONS

MATERIALS OF CONSTRUCTION: DUST SIDE: — CLEAN SIDE PLENUM: ; BAG FELT: — BAG CAGES:

DESIGN PRESSURE: PSIG — DESIGN TEMPERATURE: 9°F TO 101°F

SHELL THICKNESS: IN. — TOP THICKNESS: IN.

DUST DISPOSAL: ☐ COLLECTOR WITH MATERIAL HOPPER ☒ COLLECTOR WITH BIN VENT.& MOUNTING FLANGE; ☐ MECHANICAL SHAKER TYPE — REVERSE JET BLOWDOWN TYPE; OTHER:

INLET CONN. SIZE: RATING: LOCATION:

GAS DISCH. CONN. SIZE: RATING: LOCATION:

DUST DISCH. SIZE: RATING: LOCATION:

DISCH. VALVE: ☐ ROTARY VALVE-REF. PAGE: ☐ SLIDE GATE ☐ VENDOR SUPPLIED ☐ PURCHASER SUPPLIED

PRESSURE DROP (INLET-GAS DISCH.) NORMAL: (PSI)('H_2O), MAXIMUM: (PSI)('H_2O)

PRESSURE DROP (DUST SIDE-PLENUM) NORMAL: (PSI)('H_2O), MAXIMUM: (PSI)('H_2O)

FILTRATION EFFICIENCY: % — NO. OF BAGS: LENGTH: DIA:

FILTER SURFACE AREA: SQ. FT. — FILTER RATIO: CFM/SQ. FT.

GAS VELOCITY THROUGH COLLECTOR: FPS — DUST HOPPER CAPACITY: CU.FT.

AIR PRESSURE AVAILABLE: PSIG — ELEC. AVAIL: ☐ DC ☒ AC — VOLT/PHASE/HERTZ: 460/ 3 /60

HIGH LEVEL IND. TYPE: ☐ VENDOR SUPPLIES ☐ PURCHASER SUPPLIED

PILOT VALVES MFG: TYPE: ENCLOSURE:

TIMER MFG: TYPE: ENCLOSURE:

OVERALL SIZE LENGTH: WIDTH: HEIGHT:

REMARKS:

UNITED ENGINEERS & CONSTRUCTORS A Raytheon Company Western Operations	EQUIPMENT DATA SHEET ☒ CDR ☐ TITLE I ☐ TITLE II ☐ TITLE III	ITEM NUMBER S-05-104	PAGE 1 OF 1
CUSTOMER & LOCATION: DOE-RL/WHC HANFORD, WA	PROJECT: WRAP FACILITY MODULE 2A	UE&C JOB NO. 6237.006	DATE: 05/01/92
		ACCOUNT NO.	BY: JPJ

REVISIONS (DATE & BY)	A		B		C		D	
	E		F		G		H	

SERVICE	MANUFACTURER	NO. REQ'D	SOURCE OF QUOTE
OPC SILO DUST COLLECTOR		1	

TYPE & MODEL: PULSE-JET

CONDITIONS OF SERVICE

DUST OR MATERIAL HANDLED: ORDINARY PORTLAND CEMENT (OPC)

MATERIAL MASS FLOW RATE: 30 LB./HR.

MATERIAL BULK DENSITY: 80 LB./CU.FT.

MATERIAL CHARACTERISTICS				
	☒ DRY	☒ ALKALINE	☐ NEUTRAL	☐ SPARKS
	☐ DAMP	☐ ACID	☒ ABRASIVE	☐ TOXIC

CONVEYING MEDIUM		
	TYPE FLUID: AIR	FLOW: 30 ACFM
	TEMPERATURE: AMBIENT	RELATIVE HUMIDITY: 15 %

MATERIAL CONCENTRATION: 10 GR./CU.FT. | MINIMUM EXPLOSIVE CONCENTRATION: N/A OZ./CU.FT.

LIMITING O_2 CONCENTRATION: % | INLET PRESSURE: (PSIA)($^{1}H_2OABS$)

TEMPERATURE OF DUST LADEN GAS AT DUST POINTS: AMBIENT

LOCATION			
	☐ INDOORS	☒ OUTDOORS	ALTITUDE: 710 AMSL FT.

SERVICE				
	☐ CONTINUOUS	☒ INTERMITTENT	☒ DUST RECOVERY	☐ DUST REMOVAL

DUST MATERIAL DISCHARGED TO: T-05-104 SILO

CONSTRUCTION & SPECIFICATIONS

MATERIALS OF CONSTRUCTION		
	DUST SIDE:	CLEAN SIDE PLENUM:
	BAG FELT:	BAG CAGES:

DESIGN PRESSURE: PSIG | DESIGN TEMPERATURE: 9°F TO 101°F

SHELL THICKNESS: IN. | TOP THICKNESS: IN.

DUST DISPOSAL		
	☐ COLLECTOR WITH MATERIAL HOPPER	☒ COLLECTOR WITH BIN VENT & MOUNTING FLANGE
	☐ MECHANICAL SHAKER TYPE	☒ REVERSE JET BLOWDOWN TYPE
	OTHER:	

INLET CONN.	SIZE:	RATING:	LOCATION:
GAS DISCH. CONN.	SIZE:	RATING:	LOCATION:
DUST DISCH.	SIZE:	RATING:	LOCATION:

DISCH. VALVE				
	☐ ROTARY VALVE-REF. PAGE:	☐ SLIDE GATE	☐ VENDOR SUPPLIED	☐ PURCHASER SUPPLIED

PRESSURE DROP (INLET-GAS DISCH.) NORMAL: (PSI)($^{1}H_2O$), MAXIMUM: (PSI)($^{1}H_2O$)

PRESSURE DROP (DUST SIDE-PLENUM) NORMAL: (PSI)($^{1}H_2O$), MAXIMUM: (PSI)($^{1}H_2O$)

FILTRATION EFFICIENCY: % | NO. OF BAGS: | LENGTH: | DIA:

FILTER SURFACE AREA: SQ. FT. | FILTER RATIO: CFM/SQ. FT.

GAS VELOCITY THROUGH COLLECTOR: FPS | DUST HOPPER CAPACITY: CU.FT.

AIR PRESSURE AVAILABLE: PSIG | ELEC. AVAIL: ☐ DC ☒ AC | VOLT/PHASE/HERTZ: 480/ 3 /60

HIGH LEVEL IND.	TYPE:	☐ VENDOR SUPPLIES	☐ PURCHASER SUPPLIED
PILOT VALVES	MFG:	TYPE:	ENCLOSURE:
TIMER	MFG:	TYPE:	ENCLOSURE:
OVERALL SIZE	LENGTH:	WIDTH:	HEIGHT:

REMARKS:

9413227.0519

UNITED ENGINEERS & CONSTRUCTORS
A Raytheon Company
Western Operations

EQUIPMENT DATA SHEET

☒ CDR ☐ TITLE I ☐ TITLE II ☐ TITLE III

ITEM NUMBER: C-05-101

PAGE: 1 OF 1

CUSTOMER & LOCATION: DOE-RL/WHC HANFORD, WA

PROJECT: WRAP FACILITY MODULE 2A

UE&C JOB NO.: 6237.006

DATE: 05/19/92

ACCOUNT NO.:

BY: JPJ

REVISIONS (DATE & BY): A | B | C | D | E | F | G | H

SERVICE: AIR COMPRESSOR PACKAGE

MANUFACTURER:

NO. REQ'D: 1

SOURCE OF QUOTE:

NO. COMPRESSORS REQ'D:

SIZE & TYPE: AIR COLLED ROTARY SCREW

NO. OF STAGES:

NO. MOTORS REQ'D: | ITEM NO.: | PROVIDED BY: | MTD. BY: | REF. PAGE:

NO. OTHER DRIVERS REQ'D: | ITEM NO.: | PROVIDED BY: | MTD. BY: | REF. PAGE:

CONDITIONS OF SERVICE, EACH COMPRESSOR

☐ INSTRUMENT ☒ PLANT AIR ☐ OTHER

INLET CAPACITY @ RATED: 1,000 ACFM LB/HR DRY BARO. PSIA

INLET PRESS. @ RATED: 125 PSIA | INLET TEMP. @ RATED:

DISCH. PRESS. @ RATED: PSIA | DISCH. TEMP. @ RATED: °F

MIN. INLET: 40°F | MAX INLET TEMP.: 125°F | AFTERCOOLER DISCH. TEMP. 100°F

REL. HUMIDITY: 100% | CLEAN FILTER PRESS. DROP: PSI

SURGE AT RATED RPM: INLET ACFM

COMPRESSOR CONSTRUCTION

NOZZLE LOADS: PARALLEL (IN LINE) (F_P), VERT(F_V), HORIZ 90° TO F_P(F_H) - AT FACE

ALLOW. LOADS	F_P(LB)	F_V	F_H	F_R	M_{PET+R}	M_V	M_H	M_R
SUCTION								
DISCHARGE								

NOZZLES	SIZE	RATING	FACINGS	LOCATION
SUCTION				
DISCHARGE				

☐ PACKAGE COMP. | EQUIPMENT SUITABLE FOR OPERATION ☒ INDOOR ☐ OUTDOOR

☒ OIL FREE AIR | MAX. OPERATING CASE PRESS.: PSIG@ °F

SHAFT SEALS: ☐ LABYRINTH ☐ CARBON | LUBE PUMP DRIVE ☐ SHAFT ☐ MOTOR

BRGS.: ☒ ANTIFRICTION ☐ SLEEVE | THRUST BRG.: | MAX CONT. RPM:

AUXILIARIES

DRIVE: ☐ DIRECT ☐ ANTISPARKING V-BELT ☐ INTEGRAL GEAR ☐ GEAR UNIT SEE PG.:

COUPLING: TYPE MFR: MODEL: | ☐ GUARD (OSHA)

☒ INLET FILTER/SILENCER/WEATHERHOOD:

☒ FILTER, DRY MICRON | ☒ DISCH. SILENCER | ☐ BLOW-OFF SILENCER

☐ THROTTLE VALVE: ☐ SUCTION ☐ DISCH. ☐ OPEN-CLOSE ☐ MODULATING

☐ BLOW-OFF VALVE: ☐ OPEN-CLOSE ☐ MODULATING | ☐ DISCH. CHECK VALVE

☐ RELIEVE VALVE | RELIEF VALVE SET AT PSIG

☐ FOR RECEIVER, AFTERCOOLER, INTERCOOLER, SEPARATOR, SEE PG(S):

☒ RECEIVER, CAPACITY: 100 FT^3 | ☒ RECEIVER DRAIN VALVE

☒ AFTERCOOLER: ☐ INTEGRAL ☐ REMOTE ☐ LIQUID ☒ AIR

☒ INTERCOOLER(S): ☒ INTEGRAL ☐ REMOTE ☐ LIQUID ☒ AIR

☒ CONDENSATE SEPARATOR, TRAP & DRAIN ON: ☐ AFTERCOOLER ☐ INTERCOOLER(S)

☐ SEPARATOR DRAIN VALVE(S) ☐ ELECT. ☐ PNEU. | ☐ FULL FLOW OIL FILTER

☐ VALVE(S) ON: H_2O JACKET ☐ AFTERCOOLER ☐ INTERCOOLER(S) | ☐ ELECT ☐ PNEU.

☒ ASME CODE SEC. VIII, DIV. 1 | ☐ WITH STAMP | ☐ APPLICABLE TO THE FOLLOWING:

☒ RECEIVER ☐ AFTERCOOLER ☐ INTERCOOLER(S) ☐ SEPARATOR(S)

MOTOR DRIVE

HP: 200 | RPM: | FRAME: | VOLTS/PHASE/CYCLE: 460/3/60

MFR.: | TYPE: SQUIRREL CAGE INDUCTION | NEMA DESIGN

ENCLOSURE: | RATED AMBIENT TEMP. 40°C | INSUL. CLASS:

ELEVATION: 710 FT. | FULL LOAD AMPS: | SPACE HEATERS:

COOLING

LIQUID COOLANT: ☐ H_2O ☒ COOLING AIR TEMP. °F

LIQUID COOLANT: | TEMP °F | PRESS.: PSIG | MAX.ΔT: °F

COMP: GPM | AFTERCOOLER GPM | INTERCOOLER GPM

APPROXIMATE WEIGHTS | COMP. & BASE: 7,500 | DRIVER: INCLUDED | OTHER:

CODE REQUIREMENTS & SPECS:

REMARKS: COMPRESSOR PACKAGE TO INCLUDE DRYER, FILTERS AND RECEIVER

PERFORMANCE

PROPOSAL CURVE NO.:

BHP @ RATED: | RPM:

OVERALL EFF.: % | MAX. BHP RATED IMP.:

SUCT. THROTTLING. CFM: TO

SHOP TESTS

☐A. Performance ☐B. Mech. Run ☐C. Shop Insp.

☐D. Hydro On: ☐ E. All Press. Containing Parts

F. Comp. H_2O Jacket ☐G. Aftercooler

H. Intercooler(s) ☐ I. Case Hydro PSIG

J. Complete Unit Test

Test Requiring Witness ☐ A ☐ B ☐ C

☐ D ☐ E ☐ F ☐ G ☐ H ☐ I ☐ J

MATERIALS

CASING: | IMPELLER: | DIFF.:

SHAFT: | SLEEVE: | DIAPH:

LABYRINTH: | GASKETS:

SEALS | ROT. FACE | STA. FACE

ALARMS & SHUTDOWNS

CONTACTS FURNISHED FOR:	ALARM	SHUTDOWN
LOW LUBE OIL PRESS.	☒	☐
LOW LUBE OIL LEVEL	☒	☐
HIGH OIL FILTER Δ P	☒	☐
HIGH GAS DISCH. TEMP.	☒	☐
HIGH J.W. DISCH. TEMP.	☐	☐
HIGH INLET AIR FILTER Δ P	☒	☐
HIGH VIBRATION	☒	☒

FOR ALARM CONTACTS SHALL: ☐ OPEN ☐ CLOSE

FOR SHUTDOWN CONTACT SHALL: ☐ OPEN ☐ CLOSE

REMOTE SHUTDOWN: ☒ ELEC. ☐ PNEUM ☐ HYDR.

CONTROLS

☐ A. SUCT. THROTTLE-VALVE & BLOW-OFF VALVE

☐ B. MODULATING BLOW-OFF VALVE

☐ C. MODULATING SUCT. THROTTLE VALVE

☐ D. MODULATING DISCH. THROTTLE VALVE

☐ E. SELECTOR SWITCH

☐ F. STARTUP, ALL MOVES: ☐ UNLOADED ☐ LOADED

☐ G. PRESS. SW. LOAD PSIG. UNLOAD PSIG

☐ H. AUTO. MTR. OVERLOAD PROTECTION

☐ I. SW. ENCL. NEMA: | CONT. PANELS, NEMA

☐ J. CONTROLS & ALARMS: V/PH/HZ: 1

☒ K. CONTROLS & ALARMS: PRESSURE: 150 PSIG

UNITED ENGINEERS & CONSTRUCTORS
A Raytheon Company
Western Operations

EQUIPMENT DATA SHEET

☒ CDR ☐ TITLE I ☐ TITLE II ☐ TITLE III

ITEM NUMBER: P-05-101

PAGE: 1 OF 1

CUSTOMER & LOCATION: DOE-RL/WHC HANFORD, WA

PROJECT: WRAP FACILITY MODULE 2A

UE&C JOB NO.: 6237.006

DATE: 05/20/92

ACCOUNT NO.:

BY: JPJ

REVISIONS (DATE & BY): A ___ B ___ C ___ D ___ E ___ F ___ G ___ H ___

SERVICE: POLYMER PUMP

MANUFACTURER:

NO. REQ'D: 1

SOURCE OF QUOTE:

TYPE PUMP: PLUNGER ☐ DIAPHRAGM ☐ DIRECT ACTING ☐ POWER FRAME ☐

METERING HEADS: SIMPLEX ☐ DUPLEX ☐ TRIPLEX ☐ HEAD GANG ☐

* USE SEPARATE DATA SHEET FOR EACH LIQUID END

MATERIALS

LIQUID END: SS
PLUNGER:
CROSS HEAD:
CONN.ROD:
CRANK:
GEAR (DRIVER):
GEAR (DRIVEN):
GEAR HOUSING:
FRAME:
VALVES:
VALVE SEATS:
VALVE BODY:
PACKING: MAX. TEMP. °F:
GASKETS:
DIAPHRAGM: MAX. TEMP. °F:
LAND:
LANTERN RING:
VALVE CAPS:

CONNECTIONS

	SIZE	TYPE	RATING
SUCTION			
DISCHARGE			
DRAINS			
FLUSHING			

AIR OR GAS PURGING YES ☐ NO ☐

VALVES REPLACEABLE YES ☐ NO ☐

LIQUID END

LIQUID END BODY: TYPE (PLUNGER) (DIAPHRAGM) (REMOTE) (SUBMERGED)

PLUNGER DIAM: STROKE:
STROKES/MIN/CYLINDER:
S.W.P.: W/QUOTED DRIVER SWP: W/MAX. DRIVER

VALVES	SUCTION	DISCHARGE
TYPE		
NUMBER		
AREA IN.²		

PLUNGER SUPPORT: (PACKING): (CROSS HEAD):
PACKING SIZE: TYPE:
SPECIAL SEALS:

LUBRICATION

PACING: DRIVER BRGS.:
CONN.ROD BRGS.:
CROSS HEAD: GEARING:
POWER CYLINDER:
HYDRAULIC FLUID (DIAPHRAGM PLUNGER PUMP)

STROKE ADJUSTMENT

MANUAL ☐ AUTO ☐ WHILE RUNNING ☐ OR STOPPED ☐
REMOTE ☐ LOCAL ☐
SIGNAL: PNEUMATIC ☐ ELECTRIC ☐ HYDRAULIC ☐

AUXILIARY FEATURES

JACKETED ☐ STROKE COUNTER ☐
TIMER & MULTIPORT VALVE ☐ SPARE PACKING ☐

DRIVE

ELECTRIC ☐ GAS ☐ AIR ☐ BHP:
MAKE: CONSTANT SPEED ☐ VAR. SPEED ☐
RPM: PHASE: 1 FRAME NO.:
ENCLOSURE: FRAME NO.:
FULL LOAD CURRENT: LOCKED ROTOR CURRENT:
POWER CYLINDER: DIAM.: STROKE:
GAS PRESS. SUPPLY: EXHAUST:
GAS CONSUMPTION: SCFM @ MAX. SPEED

SPEED CONTROL: ELECT. ☐ PNEUMATIC ☐ MANUAL ☐ AUTOMATIC ☒ NONE ☐
SPEED REDUCER: MFR.: INTEG. ☐ SEPARATE ☐
MODEL: RATIO: CLASS.:
COUPLING: MAKE: TYPE:
GUARDS: COUPLING ☐ CRANK ☐
SPEED INDIC. YES ☒ NO ☐ REMOTE ☒ LOCAL ☐

SERVICE CONDITIONS

LIQUID END NO.: LIQ.: POLYESTA (ACID) PH 6.0
PUMPING TEMP.: 60 °F. VAPOR PRESS. @ P.T.:
VISCOSITY: 130-140 C.P. SPECIFIC GRAVITY: 0.9
CORROSION OR EROSION FACTORS:
CAPACITY GPH: MAX.: MIN.: NORM.: 300
SUCT. PRESS. PSIG: MAX.: MIN.: NORM.: 0
DISCH. PRESS. PSIG: MAX.: MIN.: NORM.: 10
NPSH AVAILABLE: REQ'D.:
BHP @ RATING: 0.075
BASE PLATE: CD
TEST: HYD. ☐ PERF. ☐ WITNESSED ☐ NOT WITNESSED ☐

REMARKS:

9413227.0521

NO. VESSELS REQ'D. (☐ HORIZ - ☒ VERT.) 1	CUSTOMER: DOE-RL/WHC
SHELL DIA. ☒ I.D. - ☐ O.D.: 3'-6"	PROJECT: WRAP FACILITY MODULE 2A
SHELL THICKNESS: BY VENDOR	LOCATION: HANFORD, WA
HEADS THICKNESS: BY VENDOR	☒ CDR ☐ TITLE I ☐ TITLE II ☐ TITLE III
SHELL & HEAD THICKNESS INCLUDE C.A: BY VENDOR	
SHELL LENGTH (SEAM TO SEAM): 5'-10"	
SUPPORT: 3 LOAD CELLS @ KNUCKLE	
CODE: DESIGN CONDITIONS:	

ITEM NO. T-06-201

	OPER.	DESIGN	ALLOW.
PRESS. (PSIG)	7	14	
TEMP. (°F)	60	100	

CORR. ALLOW. SHELL: HEADS:

X-RAY: STRESS RELIEF:

WINDLOAD:

MATERIALS: ALL MILD STEEL

HEADS:

SHELL: BY VENDOR

NOZZLES & FLANGES:

GASKETS: NITRILE

NOZZLES & OPENINGS	NO.	SIZE-RATING-FACE
1. INLET	1	4" - 150 - FF
2. DUST CELL	1	
3. OUTLET	1	6" - 150 - FF
4. LOAD CELLS	3	
5. LEVEL CONTROL	3	1.25" - 6,000 #
6.		
7		
8.		
9.		
10.		
11.		
12.		
13.		
14.		
15.		

INTERNALS & ACCESSORIES	FURNISHED BY VESSEL PAD.	OTHERS
FILTER ELEM.		
PACKING		
VESSEL WT:		LB EST
LADDERS & PLATFORMS		

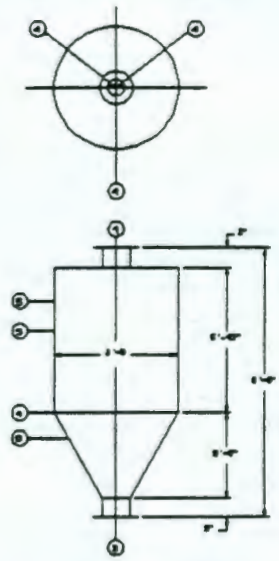

NOTES: 1. ALL COUPLING 6000#, UNLESS OTHERWISE

NO.	DATE	BY	REVISIONS

VESSEL: OPC DAY SILO

FOR:

PLANT:

LOCATION:

ORDER NO.: 6237.006 ITEM NO.:

MFGR.:

DATE: 05/21/92 BY: JPJ

UNITED ENGINEERS & CONSTRUCTORS
A Raytheon Company
Western Operations

UNITED ENGINEERS & CONSTRUCTORS A Raytheon Company Western Operations	EQUIPMENT DATA SHEET ☒ CDR ☐ TITLE I ☐ TITLE II ☐ TITLE III	ITEM NUMBER T-05-201	PAGE 1 OF 3

CUSTOMER & LOCATION	PROJECT	UE&C JOB NO. 6237.006	DATE: 05/21/92
DOE-RL/WHC HANFORD, WA	WRAP FACILITY MODULE 2A	ACCOUNT NO.	BY: JPJ

REVISIONS (DATE & BY)	A		B		C		D	
	E		F		G		H	

SERVICE	MANUFACTURER	NO. REQ'D.	SOURCE OF QUOTE
OPC DAY SILO		1	

CONDITIONS OF SERVICE

1.	MATERIAL STORED		ORDINARY PORTLAND CEMENT (OPC)
2.	BULK DENSITY (FOR VOLUME)	PCF	80
3.	BULK DENSITY (FOR WEIGHT)	PCF	100
4.	PARTICLE SIZE RANGE		< 100 MESH
5.	MOISTURE CONTENT	%	7
6.	ANGLE OF REPOSE	DEG	30-40
7.	ABRASION		MILDLY ABRASIVE
8.	CORROSION		NO
9.	ABSORPTION		
10.	EXPLOSION HAZARD		
11.	CEMA MATERIAL CODE (IF KNOWN)		80 A_{100} 26M
12.	MATERIAL TEMPERATURE (DES/OPER)	°F	100/60
13.	LOCATION (INDOOR/OUTDOOR)		INDOOR
14.	USEABLE CAPACITY	CU FT	50
15.	INTERNAL PRESSURE (DES/OPER)	PSIG	14/7
16.	WIND: (ANSI A53.1) TABLE/EXPOSURE/SPD		
17.	SEISMIC: (ANSI A58.1) ZONE		2B, IMPORTANCE FACTOR = 1.25
18.	EXPLOSION VENTING DESIGN CRITERIA		
19.			
20.	FLOW RATE (IN/OUT)	CFH	400/25
21.	HOPPER DESIGN		FUNNEL FLOW
22.	OTHER		
23.			
24.			
25.			

9413227.0523

UNITED ENGINEERS & CONSTRUCTORS A Raytheon Company Western Operations	EQUIPMENT DATA SHEET ☒ CDR ☐ TITLE I ☐ TITLE II ☐ TITLE III	ITEM NUMBER T-05-201	PAGE 2 OF 3

CUSTOMER & LOCATION	PROJECT	UE&C JOB NO.	DATE: 05/21/92
DOE-RL/WHC HANFORD, WA	WRAP FACILITY MODULE 2A	6237.006	
		ACCOUNT NO.	BY: JPJ

REVISIONS (DATE & BY)	A		B		C		D	
	E		F		G		H	

SERVICE	MANUFACTURER	NO. REQ'D.	SOURCE OF QUOTE
OPC DAY SILO		1	

DESIGN

26.	TOTAL VOLUME	CU FT	65
27.	TYPE (WELDED OR BOLTED)		WELDED
28.	SILO HEIGHT, HOPPER OUTLET TO ROOF	FT	7'-9"
29.	SILO INSIDE DIAMETER	FT	3'-6"
30.	HOPPER CONE ANGLE FROM HORIZONTAL	DEG	60
31.	SHELL MATERIAL/THICKNESS	-/IN	MILD STEEL
32.	HOPPER MATERIAL/THICKNESS	-/IN	MILD STEEL
33.	ROOM MATERIAL/THICKNESS	-/IN	
34.	CORROSION ALLOWANCE, SHELL/HOPPER	IN	
35.	HOPPER OUTLET SIZE/CONFIGURATION	IN	6" DIA
36.	MAXIMUM ALLOWABLE WORKING PRESSURE	PSIG	14
37.	MAXIMUM ALLOWABLE EXTERNAL ROOF LOAD	PSF	25
38.	OTHER		
39.			
40.			
41.			

UNITED ENGINEERS & CONSTRUCTORS A Raytheon Company Western Operations	EQUIPMENT DATA SHEET ☒ CDR ☐ TITLE I ☐ TITLE II ☐ TITLE III	ITEM NUMBER T-05-201	PAGE 3 OF 3
CUSTOMER & LOCATION DOE-RL/WHC HANFORD, WA	PROJECT WRAP FACILITY MODULE 2A	UE&C JOB NO. 6237.006	DATE: 05/21/92
		ACCOUNT NO.	BY: JPJ

REVISIONS (DATE & BY)	A		B		C		D	
	E		F		G		H	

SERVICE	MANUFACTURER	NO. REQ'D.	SOURCE OF QUOTE
OPC DAY SILO		1	

ACCESSORIES

42.	HOPPER DISCHARGE DEVICE TYPE		ROTARY VALVE
43.	HOPPER DISCHARGE DEVICE CAPACITY	CFH	100
44.	SILO BIN VENT FILTER CAPACITY	ACFM	100
45.	SILO BIN VENT FILTER AND AIR TO CLOTH RATIO		
46.	EXPLOSION VENT TYPE		
47.	EXPLOSION VENT AREA REQUIRED	SQ FT	
348.	LADDERS/PLATFORMS		
49.			
50.	PRESSURE/VACUUM RELIEF DEVICE TYPE		
51.	PRESSUR/VACCUM RELIEF DEVICE CAPACITY	CFM	
52.	OTHER		LOAD CELLS
53.	(1) PADDLE TYPE ROTARY BIN LEVEL CONTROLLERS		
54.			
55.			

9413227.0525

NO. VESSELS REQ'D. (☐ HORIZ - ☒ VERT.) 1	CUSTOMER: DOE-RL/WHC
SHELL DIA. ☒ I.D. - ☐ O.D.:	PROJECT: WRAP FACILITY MODULE 2A
SHELL THICKNESS: BY VENDOR	LOCATION: HANFORD, WA
HEADS THICKNESS: BY VENDOR	☒ CDR ☐ TITLE I ☐ TITLE II ☐ TITLE III
SHELL & HEAD THICKNESS INCLUDE C.A: BY VENDOR	
SHELL LENGTH (SEAM TO SEAM): 2'-0"	
SUPPORT: 3 LOAD CELLS @ KNUCKLE	
CODE: DESIGN CONDITIONS:	

ITEM NO. T-05-202

	OPER.	DESIGN	ALLOW.
PRESS. (PSIG)	7-8	14	
TEMP. (°F)	60	100	

CORR. ALLOW. SHELL: HEADS:

X-RAY: STRESS RELIEF:

WINDLOAD:

MATERIALS: ALL MILD STEEL

HEADS:

SHELL: BY VENDOR

NOZZLES & FLANGES:

GASKETS: NITRILE

NOZZLES & OPENINGS:	NO.	SIZE-RATING-FACE
1. INLET	1	6" - - FF
2. LEVEL CONTROL	1	1.25" - 6,000 #
3. OUTLET	1	6" - - FF
4. LOAD CELLS	3	
5.		
6.		
7		
8.		
9.		
10.		
11.		
12.		
13.		
14.		
15.		

INTERNALS & ACCESSORIES	FURNISHED BY VESSEL PAD.	FURNISHED BY OTHERS
FILTER ELEM.		
PACKING		
INSUL. RINGS		
LADDERS & PLATFORMS		

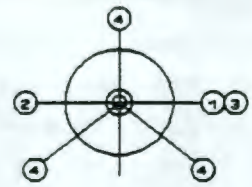

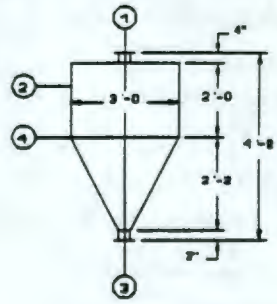

NOTES: 1. ALL COUPLING 6000#, UNLESS OTHERWISE

NO.	DATE	BY	REVISIONS

VESSEL: OPC WEIGH HOPPER

FOR:

PLANT:

LOCATION:

ORDER NO.: 6237.006 ITEM NO.:

MFGR.:

DATE: 05/11/92 BY: JPJ

UNITED ENGINEERS & CONSTRUCTORS
A Raytheon Company
Western Operations

9230 222210

UNITED ENGINEERS & CONSTRUCTORS A Raytheon Company Western Operations	EQUIPMENT DATA SHEET	ITEM NUMBER	PAGE
	☒ CDR ☐ TITLE I ☐ TITLE II ☐ TITLE III	T-05-202	1 OF 3

CUSTOMER & LOCATION	PROJECT	UE&C JOB NO.	DATE:
DOE-RL/WHC HANFORD, WA	WRAP FACILITY MODULE 2A	6237.006	04/23/92
		ACCOUNT NO.	BY: SMM

REVISIONS (DATE & BY)	A		B		C		D	
	E		F		G		H	

SERVICE	MANUFACTURER	NO. REQ'D.	SOURCE OF QUOTE
OPC WEIGHT HOPPER		1	

CONDITIONS OF SERVICE

1.	MATERIAL STORED		ORDINARY PORTLAND CEMENT (OPC)
2.	BULK DENSITY (FOR VOLUME)	PCF	80
3.	BULK DENSITY (FOR WEIGHT)	PCF	100
4.	PARTICLE SIZE RANGE		< 100 MESH
5.	MOISTURE CONTENT	%	7
6.	ANGLE OF REPOSE	DEG	30-44
7.	ABRASION		MILDLY
8.	CORROSION		NO
9.	ABSORPTION		
10.	EXPLOSION HAZARD		NO
11.	CEMA MATERIAL CODE (IF KNOWN)		80 A_{100} 26M
12.	MATERIAL TEMPERATURE (DES/OPER)	°F	100/60
13.	LOCATION (INDOOR/OUTDOOR)		INDOOR
14.	USEABLE CAPACITY	CU FT	16
15.	INTERNAL PRESSURE (DES/OPER)	PSIG	14/7
16.	WIND: (ANSI A53.1) TABLE/EXPOSURE/SPD		
17.	SEISMIC: (ANSI A58.1) ZONE		2B, IMPORTANCE FACTOR = 1.25
18.	EXPLOSION VENTING DESIGN CRITERIA		
19.			
20.	FLOW RATE (IN/OUT)	CFH	60/60
21.	HOPPER DESIGN		FUNNEL FLOW
22.	OTHER		
23.			
24.			
25.			

9413227.0527

UNITED ENGINEERS & CONSTRUCTORS A Raytheon Company Western Operations	EQUIPMENT DATA SHEET ☒ CDR ☐ TITLE I ☐ TITLE II ☐ TITLE III	ITEM NUMBER T-05-202	PAGE 2 OF 3

CUSTOMER & LOCATION	PROJECT	UE&C JOB NO. 6237.006	DATE: 04/23/92
DOE-RL/WHC HANFORD, WA	WRAP FACILITY MODULE 2A	ACCOUNT NO.	BY: SMM

REVISIONS (DATE & BY)	A		B		C		D	
	E		F		G		H	

SERVICE	MANUFACTURER	NO. REQ'D.	SOURCE OF QUOTE
OPC WEIGH HOPPER		1	

DESIGN

26.	TOTAL VOLUME	CU FT	20
27.	TYPE (WELDED OR BOLTED)		WELDED
28.	SILO HEIGHT, HOPPER OUTLET TO ROOF	FT	4'-5"
29.	SILO INSIDE DIAMETER	FT	3'-0"
30.	HOPPER CONE ANGLE FROM HORIZONTAL	DEG	60
31.	SHELL MATERIAL/THICKNESS	-/IN	MILD STEEL/BY VENDOR
32.	HOPPER MATERIAL/THICKNESS	-/IN	MILD STEEL/BY VENDOR
33.	ROOM MATERIAL/THICKNESS	-/IN	
34.	CORROSION ALLOWANCE, SHELL/HOPPER	IN	
35.	HOPPER OUTLET SIZE/CONFIGURATION	IN	6" DIA
36.	MAXIMUM ALLOWABLE WORKING PRESSURE	PSIG	14
37.	MAXIMUM ALLOWABLE EXTERNAL ROOF LOAD	PSF	25
38.	OTHER		
39.			
40.			
41.			

9413227.0528

UNITED ENGINEERS & CONSTRUCTORS A Raytheon Company Western Operations	EQUIPMENT DATA SHEET ☒ CDR ☐ TITLE I ☐ TITLE II ☐ TITLE III	ITEM NUMBER T-05-202	PAGE 3 OF 3
CUSTOMER & LOCATION DOE-RL/WHC HANFORD, WA	PROJECT WRAP FACILITY MODULE 2A	UE&C JOB NO. 6237.006 ACCOUNT NO.	DATE: 04/23/92 BY: SMM

REVISIONS (DATE & BY)	A		B		C		D	
	E		F		G		H	

SERVICE	MANUFACTURER	NO. REQ'D.	SOURCE OF QUOTE
OPC WEIGH HOPPER		1	

ACCESSORIES

42.	HOPPER DISCHARGE DEVICE TYPE		ROTARY VALVE
43.	HOPPER DISCHARGE DEVICE CAPACITY	CFH	60
44.	SILO BIN VENT FILTER CAPACITY	CFM	
45.	SILO BIN VENT FILTER AIR TO CLOTH RATIO		
46.	EXPLOSION VENT TYPE		
47.	EXPLOSION VENT AREA REQUIRED	SQ FT	
348.	LADDERS/PLATFORMS		LOAD CELLS
49.			
50.	PRESSURE/VACUUM RELIEF DEVICE TYPE		
51.	PRESSUR/VACCUM RELIEF DEVICE CAPACITY	CFM	
52.	OTHER		
53.			
54.			
55.			

9413227.0529

NO. VESSELS REQ'D. (☐ HORIZ - ☒ VERT.) 1	CUSTOMER: DOE-RL/WHC
SHELL DIA. ☒ I.D. - ☐ O.D.:	PROJECT: WRAP FACILITY MODULE 2A
SHELL THICKNESS: BY VENDOR	LOCATION: HANFORD, WA
HEADS THICKNESS: BY VENDOR	☒ CDR ☐ TITLE I ☐ TITLE II ☐ TITLE III

ITEM NO. T-05-203

SHELL & HEAD THICKNESS INCLUDE C.A: BY VENDOR

SHELL LENGTH (SEAM TO SEAM): 4'-4"

SUPPORT: 3 LOAD CELLS AT KNUCKLE

CODE: DESIGN CONDITIONS:

	OPER.	DESIGN	ALLOW.
PRESS. (PSIG)	7	14	
TEMP. (°F)	60	100	

CORR. ALLOW. SHELL: HEADS:

X-RAY: STRESS RELIEF:

WINDLOAD: NONE

MATERIALS: MILD STEEL

HEADS:

SHELL: BY VENDOR

NOZZLES & FLANGES:

GASKETS: NITRILE

NOZZLES &	NO.	SIZE-RATING-FACE
1. INLET	1	4" - 150 - FF
2. DUST COLLECTOR	1	
3. OUTLET	1	6" - 150 - FF
4. LOAD CELLS	3	
5. LEVEL CONTROL	3	1.25 - 6000 #
6.		
7		
8.		
9.		
10.		
11.		
12.		
13.		
14.		
15.		

INTERNALS & ACCESSORIES	FURNISHED BY VESSEL PAD.	FURNISHED BY OTHERS
FILTER ELEM.		
PACKING		
INSUL. RINGS		
LADDERS & PLATFORMS		

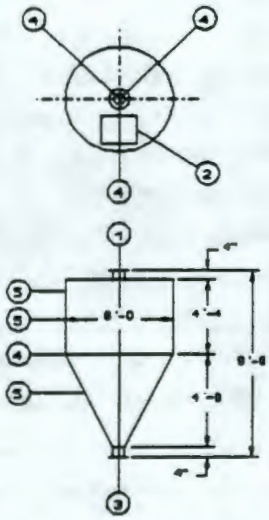

NOTES: 1. ALL COUPLING 6000#, UNLESS OTHERWISE

NO.	DATE	BY	REVISIONS

VESSEL: BFS DAY SILO

FOR:

PLANT:

LOCATION:

ORDER NO.: 6237.006 ITEM NO.:

MFGR.:

DATE: 05/12/92 BY: JPJ

UNITED ENGINEERS & CONSTRUCTORS
A Raytheon Company
Western Operations

UNITED ENGINEERS & CONSTRUCTORS A Raytheon Company Western Operations	EQUIPMENT DATA SHEET	ITEM NUMBER	PAGE
	☒ CDR ☐ TITLE I ☐ TITLE II ☐ TITLE III	T-05-203	1 OF 3

CUSTOMER & LOCATION	PROJECT	UE&C JOB NO.	DATE: 05/12/92
DOE-RL/WHC HANFORD, WA	WRAP FACILITY MODULE 2A	6237.006	
		ACCOUNT NO.	BY: JPJ

REVISIONS (DATE & BY)	A		B		C		D	
	E		F		G		H	

SERVICE	MANUFACTURER	NO. REQ'D.	SOURCE OF QUOTE
BFS DAY SILO		1	

CONDITIONS OF SERVICE

1.	MATERIAL STORED		BLAST FURNACE SLAG (BFS)
2.	BULK DENSITY (FOR VOLUME)	PCF	60
3.	BULK DENSITY (FOR WEIGHT)	PCF	70
4.	PARTICLE SIZE RANGE		< 1/8"
5.	MOISTURE CONTENT	%	.5
6.	ANGLE OF REPOSE	DEG	25
7.	ABRASION		VERY ABRASIVE
8.	CORROSION		NO
9.	ABSORPTION		N/A
10.	EXPLOSION HAZARD		60 D, 37
11.	CEMA MATERIAL CODE (IF KNOWN)		B28Y
12.	MATERIAL TEMPERATURE (DES/OPER)	°F	100/60
13.	LOCATION (INDOOR/OUTDOOR)		INDOOR
14.	USEABLE CAPACITY	CU FT	143
15.	INTERNAL PRESSURE (DES/OPER)	PSIG	14/7
16.	WIND: (ANSI A53.1) TABLE/EXPOSURE/SPD		N/A
17.	SEISMIC: (ANSI A58.1) ZONE		2B, IMPORTANCE FACTOR = 1.25
18.	EXPLOSION VENTING DESIGN CRITERIA		N/A
19.			
20.	FLOW RATE (IN/OUT)	CFH	400/60
21.	HOPPER DESIGN (MASS OR EXPANDED FLOW)		FUNNEL FLOW
22.	OTHER		
23.			
24.			
25.			

9413227.0531

UNITED ENGINEERS & CONSTRUCTORS A Raytheon Company Western Operations	EQUIPMENT DATA SHEET ☒ CDR ☐ TITLE I ☐ TITLE II ☐ TITLE III	ITEM NUMBER T-05-203	PAGE 2 OF 3

CUSTOMER & LOCATION	PROJECT	UE&C JOB NO.	DATE: 05/12/92
DOE-RL/WHC HANFORD, WA	WRAP FACILITY MODULE 2A	6237.006	
		ACCOUNT NO.	BY: JPJ

REVISIONS (DATE & BY)	A		B		C		D	
	E		F		G		H	

SERVICE	MANUFACTURER	NO. REQ'D.	SOURCE OF QUOTE
BFS DAY SILO		1	

DESIGN

26.	TOTAL VOLUME	CU FT	170
27.	TYPE (WELDED OR BOLTED)		WELDED
28.	SILO HEIGHT, HOPPER OUTLET TO ROOF	FT	9'-2"
29.	SILO INSIDE DIAMETER	FT	6'-0"
30.	HOPPER CONE ANGLE FROM HORIZONTAL	DEG	60
31.	SHELL MATERIAL/THICKNESS	-/IN	MILD STEEL
32.	HOPPER MATERIAL/THICKNESS	-/IN	MILD STEEL
33.	ROOM MATERIAL/THICKNESS	-/IN	—
34.	CORROSION ALLOWANCE, SHELL/HOPPER	IN	N/A
35.	HOPPER OUTLET SIZE/CONFIGURATION	IN	6" DIA
36.	MAXIMUM ALLOWABLE WORKING PRESSURE	PSIG	14
37.	MAXIMUM ALLOWABLE EXTERNAL ROOF LOAD	PSIG	25
38.	OTHER		PSF
39.			
40.			
41.			

UNITED ENGINEERS & CONSTRUCTORS A Raytheon Company Western Operations	EQUIPMENT DATA SHEET ☒ CDR ☐ TITLE I ☐ TITLE II ☐ TITLE III	ITEM NUMBER T-06-203	PAGE 3 OF 3

CUSTOMER & LOCATION	PROJECT	UE&C JOB NO. 6237.006	DATE: 06/12/92
DOE-RL/WHC HANFORD, WA	WRAP FACILITY MODULE 2A	ACCOUNT NO.	BY: JPJ

REVISIONS (DATE & BY)	A		B		C		D	
	E		F		G		H	

SERVICE	MANUFACTURER	NO. REQ'D.	SOURCE OF QUOTE
BULK SOLIDS STORAGE SILO		1	

ACCESSORIES

42.	HOPPER DISCHARGE DEVICE TYPE		ROTARY VALVE
43.	HOPPER DISCHARGE DEVICE CAPACITY	CFH	60
44.	SILO BIN VENT FILTER CAPACITY	ACFM	100
45.	SILO BIN VENT FILTER AIR TO CLOTH RATIO		
46.	EXPLOSION VENT TYPE		N/A
47.	EXPLOSION VENT AREA REQUIRED	SQ FT	N/A
348.	LADDERS/PLATFORMS		BY VENDOR
49.			
50.	PRESSURE/VACUUM RELIEF DEVICE TYPE		N/A
51.	PRESSUR/VACCUM RELIEF DEVICE CAPACITY	CFM	N/A
52.	OTHER (3) PADDLE TYPE ROTARY BIN LEVEL CONTROLLERS LOAD CELLS		
53.			
54.			
55.			

9413227.0563

NO. VESSELS REQ'D. (☐ HORIZ - ☒ VERT.) 1	CUSTOMER: DOE-RL/WHC
SHELL DIA. ☒ I.D. - ☐ O.D.: 3'-0"	PROJECT: WRAP FACILITY MODULE 2A
SHELL THICKNESS: BY VENDOR	LOCATION: HANFORD, WA
HEADS THICKNESS: BY VENDOR	☒ CDR ☐ TITLE I ☐ TITLE II ☐ TITLE III
SHELL & HEAD THICKNESS INCLUDE C.A: BY VENDOR	
SHELL LENGTH (SEAM TO SEAM): 3 LOAD CELLS @ KNUCKLE	
SUPPORT:	
CODE: DESIGN CONDITIONS:	

ITEM NO. T-06-204

	OPER.	DESIGN	ALLOW.
PRESS. (PSIG)	7	14	
TEMP. (°F)	60	100	

CORR. ALLOW. SHELL: HEADS:

X-RAY: STRESS RELIEF:

WINDLOAD:

MATERIALS: ALL MILD STEEL

HEADS:

SHELL: BY VENDOR

NOZZLES & FLANGES:

GASKETS: NITRILE

NOZZLES & OPENINGS	NO.	SIZE-RATING-FACE
1. INLET CONTROL	1	6" - - FF
2. LEVEL	1	1/25" - 6,000 #
3. OUTLET	1	6" - - FF
4. LOAD CELLS	3	
5.		
6.		
7		
8.		
9.		
10.		
11.		
12.		
13.		
14.		
15.		

INTERNALS & ACCESSORIES	FURNISHED BY VESSEL PAD.	FURNISHED BY OTHERS
FILTER ELEM.		
PACKING		
INSUL. RINGS		
LADDERS & PLATFORMS		

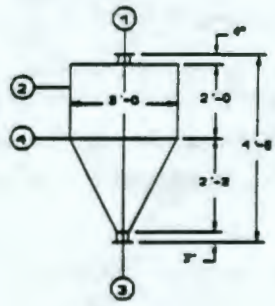

NOTES: 1. ALL COUPLING 6000#, UNLESS OTHERWISE

NO.	DATE	BY	REVISIONS

VESSEL: BFS WEIGH HOPPER

FOR:

PLANT:

LOCATION:

ORDER NO.: 6237.006 ITEM NO.:

MFGR.:

UNITED ENGINEERS & CONSTRUCTORS
A Raytheon Company
Western Operations

DATE: 06/21/92 BY: JPJ

UNITED ENGINEERS & CONSTRUCTORS A Raytheon Company Western Operations	EQUIPMENT DATA SHEET ☒ CDR ☐ TITLE I ☐ TITLE II ☐ TITLE III	ITEM NUMBER T-05-204	PAGE 1 OF 3
CUSTOMER & LOCATION DOE-RL/WHC HANFORD, WA	PROJECT WRAP FACILITY MODULE 2A	UE&C JOB NO. 6237.006 ACCOUNT NO.	DATE: 05/21/92 BY: JPJ

REVISIONS (DATE & BY)								
	A		B		C		D	
	E		F		G		H	

SERVICE	MANUFACTURER	NO. REQ'D.	SOURCE OF QUOTE
BFS WEIGH HOPPER		1	

CONDITIONS OF SERVICE

1.	MATERIAL STORED		BLAST FURNACE SLAG (BFS)
2.	BULK DENSITY (FOR VOLUME)	PCF	60
3.	BULK DENSITY (FOR WEIGHT)	PCF	70
4.	PARTICLE SIZE RANGE		< 1/8"
5.	MOISTURE CONTENT	%	5
6.	ANGLE OF REPOSE	DEG	25
7.	ABRASION		VERY ABRASIVE
8.	CORROSION		NO
9.	ABSORPTION		
10.	EXPLOSION HAZARD		NO
11.	CEMA MATERIAL CODE (IF KNOWN)		50 D, 37
12.	MATERIAL TEMPERATURE (DES/OPER)	°F	100/60
13.	LOCATION (INDOOR/OUTDOOR)		INDOOR
14.	USEABLE CAPACITY	CU FT	18
15.	INTERNAL PRESSURE (DES/OPER)	PSIG	14/7
16.	WIND: (ANSI A53.1) TABLE/EXPOSURE/SPD		
17.	SEISMIC: (ANSI A58.1) ZONE		2B, IMPORTANCE FACTOR = 1.25
18.	EXPLOSION VENTING DESIGN CRITERIA		
19.			
20.	FLOW RATE (IN/OUT)	CFH	60/60
21.	HOPPER DESIGN		FUNNEL FLOW
22.	OTHER		
23.			
24.			
25.			

9413227.0535

UNITED ENGINEERS & CONSTRUCTORS A Raytheon Company Western Operations	EQUIPMENT DATA SHEET ☒ CDR ☐ TITLE I ☐ TITLE II ☐ TITLE III	ITEM NUMBER T-05-204	PAGE 2 OF 3

CUSTOMER & LOCATION	PROJECT	UE&C JOB NO. 6237.006	DATE: 05/21/92
DOE-RL/WHC HANFORD, WA	WRAP FACILITY MODULE 2A	ACCOUNT NO.	BY: JPJ

REVISIONS (DATE & BY)	A		B		C		D	
	E		F		G		H	

SERVICE	MANUFACTURER	NO. REQ'D.	SOURCE OF QUOTE
BFS WEIGH HOPPER		1	

DESIGN

26.	TOTAL VOLUME	CU FT	20
27.	TYPE (WELDED OR BOLTED)		WELDED
28.	SILO HEIGHT, HOPPER OUTLET TO ROOF	FT	4'-5"
29.	SILO INSIDE DIAMETER	FT	3'-0
30.	HOPPER CONE ANGLE FROM HORIZONTAL	DEG	60
31.	SHELL MATERIAL/THICKNESS	-/IN	MILD STEEL/BY VENDOR
32.	HOPPER MATERIAL/THICKNESS	-/IN	MILD STEEL/BY VENDOR
33.	ROOM MATERIAL/THICKNESS	-/IN	
34.	CORROSION ALLOWANCE, SHELL/HOPPER	IN	
35.	HOPPER OUTLET SIZE/CONFIGURATION	IN	6" DIA
36.	MAXIMUM ALLOWABLE WORKING PRESSURE	PSIG	14
37.	MAXIMUM ALLOWABLE EXTERNAL ROOF LOAD	PSF	25
38.	OTHER		
39.			
40.			
41.			

9413227.0536

UNITED ENGINEERS & CONSTRUCTORS A Raytheon Company Western Operations	EQUIPMENT DATA SHEET X CDR ☐ TITLE I ☐ TITLE II ☐ TITLE III	ITEM NUMBER T-05-204	PAGE 3 OF 3
CUSTOMER & LOCATION DOE-RL/WHC HANFORD, WA	PROJECT WRAP FACILITY MODULE 2A	UE&C JOB NO. 6237.006	DATE: 05/21/92
		ACCOUNT NO.	BY: JPJ

REVISIONS (DATE & BY)	A		B		C		D	
	E		F		G		H	

SERVICE	MANUFACTURER	NO. REQ'D.	SOURCE OF QUOTE
BFS WEIGH HOPPER		1	

ACCESSORIES

42.	HOPPER DISCHARGE DEVICE TYPE		ROTARY VALVE
43.	HOPPER DISCHARGE DEVICE CAPACITY	CFH	60
44.	SILO BIN VENT FILTER CAPACITY	CFM	
45.	SILO BIN VENT FILTER AND AIR TO CLOTH RATIO		
46.	EXPLOSION VENT TYPE		
47.	EXPLOSION VENT AREA REQUIRED	SQ FT	
348.	LADDERS/PLATFORMS		
49.			
50.	PRESSURE/VACUUM RELIEF DEVICE TYPE		
51.	PRESSUR/VACCUM RELIEF DEVICE CAPACITY	CFM	
52.	OTHER		LOAD CELLS
53.	(1) PADDLE TYPE ROTARY BIN LEVEL CONTROLLERS		
54.			
55.			

NO. VESSELS REQ'D. (☐ HORIZ - ☒ VERT.) 1	CUSTOMER: DOE-RL/WHC
SHELL DIA. ☒ I.D. - ☐ O.D.: 6'-0"	PROJECT: WRAP FACILITY MODULE 2A
SHELL THICKNESS: BY VENDOR	LOCATION: HANFORD, WA
HEADS THICKNESS: BY VENDOR	☒ CDR ☐ TITLE I ☐ TITLE II ☐ TITLE III
SHELL & HEAD THICKNESS INCLUDE C.A: BY VENDOR	
SHELL LENGTH (SEAM TO SEAM): 4'-4"	
SUPPORT: 3 LOAD CELLS AT KNUCKLE	

ITEM NO. T-06-205

CODE: DESIGN CONDITIONS:

	OPER.	DESIGN	ALLOW.
PRESS. (PSIG)	7	14	
TEMP. (°F)	60	100	

CORR. ALLOW. SHELL: HEADS:

X-RAY: STRESS RELIEF:

WINDLOAD:

MATERIALS: MILD STEEL

HEADS:

SHELL: BY VENDOR

NOZZLES & FLANGES:

GASKETS: NITRILE

NOZZLES &	NO.	SIZE-RATING-FACE
1. INLET	1	4" - 150 - FF
2. DUST COLLECTOR	1	
3. OUTLET	1	6" - 130 - FF
4. LOAD CELLS	3	
5. LEVEL CONTROL	3	1.25" - 6000 #
6.		
7		
8.		
9.		
10.		
11.		
12.		
13.		
14.		
15.		

INTERNALS & ACCESSORIES	FURNISHED BY VESSEL PAD.	OTHERS
FILTER ELEM.		
PACKING		
INSUL. RINGS		
LADDERS & PLATFORMS		

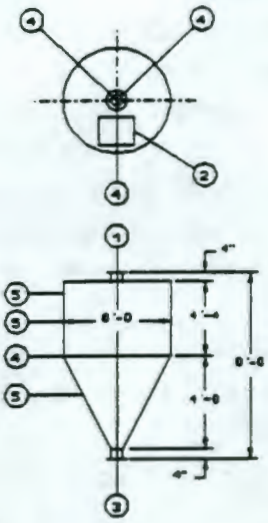

NOTES: 1. ALL COUPLING 6000#, UNLESS OTHERWISE

NO.	DATE	BY	REVISIONS

VESSEL: BFS SILO

FOR:

PLANT:

LOCATION:

ORDER NO.: 6237.006 ITEM NO.:

MFGR.:

UNITED ENGINEERS & CONSTRUCTORS
A Raytheon Company
Western Operations

DATE: 05/12/92 BY: JPJ

UNITED ENGINEERS & CONSTRUCTORS A Raytheon Company Western Operations	EQUIPMENT DATA SHEET ☒ CDR ☐ TITLE I ☐ TITLE II ☐ TITLE III	ITEM NUMBER T-05-205	PAGE 1 OF 3
CUSTOMER & LOCATION DOE-RL/WHC HANFORD, WA	PROJECT WRAP FACILITY MODULE 2A	UE&C JOB NO. 6237.006 / ACCOUNT NO.	DATE: 05/12/92 / BY: JPJ

REVISIONS (DATE & BY)	A		B		C		D	
	E		F		G		H	

SERVICE	MANUFACTURER	NO. REQ'D.	SOURCE OF QUOTE
BFS SILO		1	

CONDITIONS OF SERVICE

1.	MATERIAL STORED		BLAST FURNACE SLAG (BFS)
2.	BULK DENSITY (FOR VOLUME)	PCF	60
3.	BULK DENSITY (FOR WEIGHT)	PCF	70
4.	PARTICLE SIZE RANGE		< 1/8"
5.	MOISTURE CONTENT	%	5
6.	ANGLE OF REPOSE	DEG	25
7.	ABRASION		VERY ABRASIVE
8.	CORROSION		NO
9.	ABSORPTION		
10.	EXPLOSION HAZARD		N/A
11.	CEMA MATERIAL CODE (IF KNOWN)		60 D, 37
12.	MATERIAL TEMPERATURE (DES/OPER)	°F	100/60
13.	LOCATION (INDOOR/OUTDOOR)		INDOOR
14.	USEABLE CAPACITY	CU FT	143
15.	INTERNAL PRESSURE (DES/OPER)	PSIG	14/7
16.	WIND: (ANSI A53.1) TABLE/EXPOSURE/SPD		N/A
17.	SEISMIC: (ANSI A58.1) ZONE		2B IMPORTANCE FACTOR = 1.25
18.	EXPLOSION VENTING DESIGN CRITERIA		F/A
19.			
20.	FLOW RATE (IN/OUT)	CFH	400/60
21.	HOPPER DESIGN (MASS OR EXPANDED FLOW)		FUNNEL FLOW
22.	OTHER		
23.			
24.			
25.			

9413227.0539

UNITED ENGINEERS & CONSTRUCTORS A Raytheon Company Western Operations	EQUIPMENT DATA SHEET ☒ CDR ☐ TITLE I ☐ TITLE II ☐ TITLE III	ITEM NUMBER T-05-205	PAGE 2 OF 3

CUSTOMER & LOCATION	PROJECT	UE&C JOB NO.	DATE: 05/12/92
DOE-RL/WHC HANFORD, WA	WRAP FACILITY MODULE 2A	6237.006	
		ACCOUNT NO.	BY: JPJ

REVISIONS (DATE & BY)	A		B		C		D	
	E		F		G		H	

SERVICE	MANUFACTURER	NO. REQ'D.	SOURCE OF QUOTE
BFS SILO		1	

DESIGN

26.	TOTAL VOLUME	CU FT	170
27.	TYPE (WELDED OR BOLTED)		WELDED
28.	SILO HEIGHT, HOPPER OUTLET TO ROOF	FT	9'-2"
29.	SILO INSIDE DIAMETER	FT	6'-0"
30.	HOPPER CONE ANGLE FROM HORIZONTAL	DEG	60
31.	SHELL MATERIAL/THICKNESS	-/IN	MILD STEEL
32.	HOPPER MATERIAL/THICKNESS	-/IN	MILD STEEL
33.	ROOM MATERIAL/THICKNESS	-/IN	
34.	CORROSION ALLOWANCE, SHELL/HOPPER	IN	N/A
35.	HOPPER OUTLET SIZE/CONFIGURATION	IN	6" DIA
36.	MAXIMUM ALLOWABLE WORKING PRESSURE	PSIG	14
37.	MAXIMUM ALLOWABLE EXTERNAL ROOF LOAD	PSF	25
38.	OTHER		
39.			
40.			
41.			

9413267.0540

UNITED ENGINEERS & CONSTRUCTORS A Raytheon Company Western Operations	EQUIPMENT DATA SHEET ☒ CDR ☐ TITLE I ☐ TITLE II ☐ TITLE III	ITEM NUMBER T-05-206	PAGE 3 OF 3
CUSTOMER & LOCATION DOE-RL/WHC HANFORD, WA	PROJECT WRAP FACILITY MODULE 2A	UE&C JOB NO. 6237.006	DATE: 06/12/92
		ACCOUNT NO.	BY: JPJ

REVISIONS (DATE & BY)	A		B		C		D	
	E		F		G		H	

SERVICE	MANUFACTURER	NO. REQ'D.	SOURCE OF QUOTE
BFS SILO		1	

ACCESSORIES

42.	HOPPER DISCHARGE DEVICE TYPE		ROTARY VALVE
43.	HOPPER DISCHARGE DEVICE CAPACITY	CFH	50
44.	SILO BIN VENT FILTER CAPACITY	ACFM	100
45.	SILO BIN VENT FILTER AIR TO CLOTH RATIO		
46.	EXPLOSION VENT TYPE		N/A
47.	EXPLOSION VENT AREA REQUIRED	SQ FT	N/A
348.	LADDERS/PLATFORMS		BY VENDOR
49.			
50.	PRESSURE/VACUUM RELIEF DEVICE TYPE		N/A
51.	PRESSUR/VACCUM RELIEF DEVICE CAPACITY	CFM	N/A
52.	OTHER (3) PAPPLE TYPE ROTARY BIN LEVEL CONTROLLERS LOAD CELLS		
53.			
54.			
55.			

9413227.0541

NO. VESSELS REQ'D. (☐ HORIZ - ☒ VERT.) 1	CUSTOMER: DOE-RL/WHC
SHELL DIA. ☒ I.D. - ☐ O.D.: 6'-0"	PROJECT: WRAP FACILITY MODULE 2A
SHELL THICKNESS: BY VENDOR	LOCATION: HANFORD, WA
HEADS THICKNESS: BY VENDOR	☒ CDR ☐ TITLE I ☐ TITLE II ☐ TITLE III
SHELL & HEAD THICKNESS INCLUDE C.A: BY VENDOR	
SHELL LENGTH (SEAM TO SEAM): 4'-4"	
SUPPORT: 3 LOAD CELLS AT KNUCKLE	
CODE: DESIGN CONDITIONS:	

ITEM NO. T-05-206

	OPER.	DESIGN	ALLOW.
PRESS. (PSIG)	7	14	
TEMP. (°F)	60	100	

CORR. ALLOW. SHELL: HEADS:

X-RAY: STRESS RELIEF:

WINDLOAD:

MATERIALS: ALL MILD STEEL

HEADS:

SHELL: BY VENDOR

NOZZLES & FLANGES:

GASKETS:

NOZZLES & OPENINGS	NO.	SIZE-RATING-FACE
1. INLET	2	
2. DUST COLLECTOR	1	
3. LOAD CELLS	3	
4. LEVEL CONTROL	3	1.25" - 6000 #
5. OUTLET	1	6" - 150 - FF
6.		
7		
8.		
9.		
10.		
11.		
12.		
13.		
14.		
15.		

INTERNALS & ACCESSORIES	FURNISHED BY VESSEL PAD.	OTHERS
FILTER ELEM.		
PACKING		
INSUL. RINGS		
LADDERS & PLATFORMS	BY VENDOR	

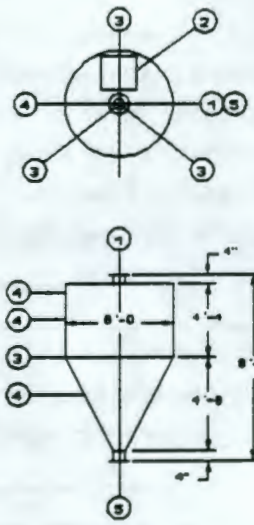

NOTES: 1. ALL COUPLING 6000#, UNLESS OTHERWISE

NO.	DATE	BY	REVISIONS

VESSEL: PFA SILO

FOR:

PLANT:

LOCATION:

ORDER NO.: 6237.006 ITEM NO.:

MFGR.:

DATE: 05/21/92 BY: JPJ

UNITED ENGINEERS & CONSTRUCTORS
A Raytheon Company
Western Operations

UNITED ENGINEERS & CONSTRUCTORS A Raytheon Company Western Operations	EQUIPMENT DATA SHEET ☒ CDR ☐ TITLE I ☐ TITLE II ☐ TITLE III	ITEM NUMBER T-05-206	PAGE 1 OF 3
CUSTOMER & LOCATION DOE-RL/WHC HANFORD, WA	PROJECT WRAP FACILITY MODULE 2A	UE&C JOB NO. 6237.006	DATE: 05/21/92
		ACCOUNT NO.	BY: JPJ

REVISIONS (DATE & BY)	A		B		C		D	
	E		F		G		H	

SERVICE	MANUFACTURER	NO. REQ'D.	SOURCE OF QUOTE
PFA SILO		1	

CONDITIONS OF SERVICE

1.	MATERIAL STORED		PULVERIZED FLY ASH (PFA)
2.	BULK DENSITY (FOR VOLUME)	PCF	40
3.	BULK DENSITY (FOR WEIGHT)	PCF	95
4.	PARTICLE SIZE RANGE		< 100 MESH
5.	MOISTURE CONTENT	%	5
6.	ANGLE OF REPOSE	DEG	42
7.	ABRASION		MILDLY ABRASIVE
8.	CORROSION		NO
9.	ABSORPTION		
10.	EXPLOSION HAZARD		
11.	CEMA MATERIAL CODE (IF KNOWN)		40 A_{100} 25
12.	MATERIAL TEMPERATURE (DES/OPER)	°F	100/60
13.	LOCATION (INDOOR/OUTDOOR)		INDOOR
14.	USEABLE CAPACITY	CU FT	120
15.	INTERNAL PRESSURE (DES/OPER)	PSIG	14/7
16.	WIND: (ANSI A53.1) TABLE/EXPOSURE/SPD		
17.	SEISMIC: (ANSI A58.1) ZONE		2B, IMPORTANCE FACTOR = 1.25
18.	EXPLOSION VENTING DESIGN CRITERIA		
19.			
20.	FLOW RATE (IN/OUT)	CFH	400/90
21.	HOPPER DESIGN (MASS OR EXPANDED FLOW)		FUNNEL FLOW
22.	OTHER		
23.			
24.			
25.			

9413227.0543

UNITED ENGINEERS & CONSTRUCTORS A Raytheon Company Western Operations	EQUIPMENT DATA SHEET ☒ CDR ☐ TITLE I ☐ TITLE II ☐ TITLE III	ITEM NUMBER T-05-206	PAGE 2 OF 3
CUSTOMER & LOCATION DOE-RL/WHC HANFORD, WA	PROJECT WRAP FACILITY MODULE 2A	UE&C JOB NO. 6237.006 ACCOUNT NO.	DATE: 05/21/92 BY: JPJ

REVISIONS (DATE & BY)	A		B		C		D	
	E		F				H	

SERVICE	MANUFACTURER	NO. REQ'D.	SOURCE OF QUOTE
PFA SILO		1	

DESIGN

26.	TOTAL VOLUME	CU FT	170
27.	TYPE (WELDED OR BOLTED)		WELDED
28.	SILO HEIGHT, HOPPER OUTLET TO ROOF	FT	9'-2"
29.	SILO INSIDE DIAMETER	FT	6'-0"
30.	HOPPER CONE ANGLE FROM HORIZONTAL	DEG	60
31.	SHELL MATERIAL/THICKNESS	-/IN	MILD STEEL
32.	HOPPER MATERIAL/THICKNESS	-/IN	MILD STEEL
33.	ROOM MATERIAL/THICKNESS	-/IN	
34.	CORROSION ALLOWANCE, SHELL/HOPPER	IN	
35.	HOPPER OUTLET SIZE/CONFIGURATION	IN	6" DIA
36.	MAXIMUM ALLOWABLE WORKING PRESSURE	PSIG	14
37.	MAXIMUM ALLOWABLE EXTERNAL ROOF LOAD	PSF	25
38.	OTHER		
39.			
40.			
41.			

UNITED ENGINEERS & CONSTRUCTORS A Raytheon Company Western Operations	EQUIPMENT DATA SHEET ☒ CDR ☐ TITLE I ☐ TITLE II ☐ TITLE III	ITEM NUMBER T-05-206	PAGE 3 OF 3

CUSTOMER & LOCATION	PROJECT	UE&C JOB NO. 6237.006	DATE: 06/21/92
DOE-RL/WHC HANFORD, WA	WRAP FACILITY MODULE 2A	ACCOUNT NO.	BY: JPJ

REVISIONS (DATE & BY)	A		B		C		D	
	E		F		G		H	

SERVICE	MANUFACTURER	NO. REQ'D.	SOURCE OF QUOTE
PFA SILO		1	

ACCESSORIES

42.	HOPPER DISCHARGE DEVICE TYPE		ROTARY VALVE
43.	HOPPER DISCHARGE DEVICE CAPACITY	CFH	90
44.	SILO BIN VENT FILTER CAPACITY	ACFM	100
45.	SILO BIN VENT FILTER AND AIR TO CLOTH RATIO		
46.	EXPLOSION VENT TYPE		
47.	EXPLOSION VENT AREA REQUIRED	SQ FT	
348.	LADDERS/PLATFORMS		BY VENDOR
49.			
50.	PRESSURE/VACUUM RELIEF DEVICE TYPE		
51.	PRESSUR/VACCUM RELIEF DEVICE CAPACITY	CFM	
52.	OTHER (3) PADDLE TYPE ROTARY BIN LEVEL CONTROLLERS LOAD CELLS		
53.			
54.			
55.			

9413227.0545

NO. VESSELS REQ'D. (☐ HORIZ - ☒ VERT.) 1	CUSTOMER: DOE-RL/WHC
SHELL DIA. ☒ I.D. - ☐ O.D.: 3'-0"	PROJECT: WRAP FACILITY MODULE 2A
SHELL THICKNESS: BY VENDOR	LOCATION: HANFORD, WA
HEADS THICKNESS: BY VENDOR	☒ CDR ☐ TITLE I ☐ TITLE II ☐ TITLE III
SHELL & HEAD THICKNESS INCLUDE C.A: BY VENDOR	
SHELL LENGTH (SEAM TO SEAM): 2'-0"	
SUPPORT: 3 LOAD CELLS @ KNUCKLE	
CODE: DESIGN CONDITIONS:	

ITEM NO. T-05-207

	OPER.	DESIGN	ALLOW.
PRESS. (PSIG)	7	14	
TEMP. (°F)	60	100	

CORR. ALLOW. SHELL: HEADS:

X-RAY: STRESS RELIEF:

WINDLOAD:

MATERIALS: ALL MILD STEEL

HEADS:

SHELL: BY VENDOR

NOZZLES & FLANGES:

GASKETS: NITRILE

NOZZLES & OPENINGS	NO.	SIZE-RATING-FACE
1. OPC INLET	1	7" - - FF
2. BFS INLET	1	7" - - FF
3. PFA INLET	1	10" - - FF
4. LOAD CELLS	3	
5. OUTLET	1	6" - 150 - FF
6.		
7		
8.		
9.		
10.		
11.		
12.		
13.		
14.		
15.		

INTERNALS & ACCESSORIES	FURNISHED BY VESSEL PAD.	FURNISHED BY OTHERS
FILTER ELEM.		
PACKING		
INSUL. RINGS		
LADDERS & PLATFORMS		

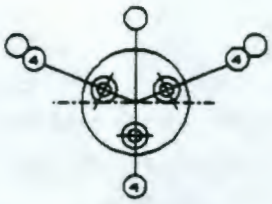

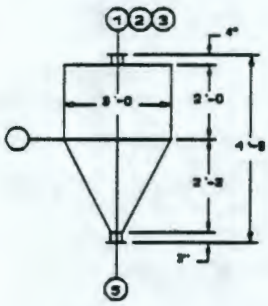

NOTES: 1. ALL COUPLING 6000#, UNLESS OTHERWISE

NO.	DATE	BY	REVISIONS

VESSEL:

FOR:

PLANT:

LOCATION:

ORDER NO.: 6237.006 ITEM NO.:

MFGR.:

DATE: 05/21/92 BY: JPJ

UNITED ENGINEERS & CONSTRUCTORS
A Raytheon Company
Western Operations

UNITED ENGINEERS & CONSTRUCTORS A Raytheon Company Western Operations	EQUIPMENT DATA SHEET ☒ CDR ☐ TITLE I ☐ TITLE II ☐ TITLE III	ITEM NUMBER T-05-207	PAGE 1 OF 3
CUSTOMER & LOCATION DOE-RL/WHC HANFORD, WA	PROJECT WRAP FACILITY MODULE 2A	UE&C JOB NO. 6237.006 ACCOUNT NO.	DATE: 05/21/92 BY: JPJ

REVISIONS (DATE & BY)	A		B		C		D	
	E		F		G		H	

SERVICE	MANUFACTURER	NO. REQ'D.	SOURCE OF QUOTE
SURGE HOPPER		1	

CONDITIONS OF SERVICE

1.	MATERIAL STORED		BLENDED POWDER (3:1, BFS:OPC)
2.	BULK DENSITY (FOR VOLUME)	PCF	65
3.	BULK DENSITY (FOR WEIGHT)	PCF	75
4.	PARTICLE SIZE RANGE		< 100 MESH → 1/8"
5.	MOISTURE CONTENT	%	5
6.	ANGLE OF REPOSE	DEG	30
7.	ABRASION		VERY ABRASIVE
8.	CORROSION		NO
9.	ABSORPTION		
10.	EXPLOSION HAZARD		
11.	CEMA MATERIAL CODE (IF KNOWN)		65 B, 37MU
12.	MATERIAL TEMPERATURE (DES/OPER)	°F	100/60
13.	LOCATION (INDOOR/OUTDOOR)		INDOOR
14.	USEABLE CAPACITY	CU FT	17
15.	INTERNAL PRESSURE (DES/OPER)	PSIG	14
16.	WIND: (ANSI A53.1) TABLE/EXPOSURE/SPD		
17.	SEISMIC: (ANSI A58.1) ZONE		2B, IMPORTANCE FACTOR = 1.25
18.	EXPLOSION VENTING DESIGN CRITERIA		
19.			
20.	FLOW RATE (IN/OUT)	CFH	60/60
21.	HOPPER DESIGN (MASS OR EXPANDED FLOW)		FUNNEL FLOW
22.	OTHER		
23.			
24.			
25.			

9413227.0547

UNITED ENGINEERS & CONSTRUCTORS A Raytheon Company Western Operations	EQUIPMENT DATA SHEET ☒ CDR ☐ TITLE I ☐ TITLE II ☐ TITLE III	ITEM NUMBER T-05-207	PAGE 2 OF 3
CUSTOMER & LOCATION DOE-RL/WHC HANFORD, WA	PROJECT WRAP FACILITY MODULE 2A	UE&C JOB NO. 6237.006 ACCOUNT NO.	DATE: 05/21/92 BY: JPJ

REVISIONS (DATE & BY)								
	A		B		C		D	
	E		F		G		H	

SERVICE	MANUFACTURER	NO. REQ'D.	SOURCE OF QUOTE
SURGE HOPPER		1	

DESIGN

26.	TOTAL VOLUME	CU FT	20
27.	TYPE (WELDED OR BOLTED)		WELDED
28.	SILO HEIGHT, HOPPER OUTLET TO ROOF	FT	4'-6"
29.	SILO INSIDE DIAMETER	FT	3'-0"
30.	HOPPER CONE ANGLE FROM HORIZONTAL	DEG	60
31.	SHELL MATERIAL/THICKNESS	-/IN	MILD STEEL
32.	HOPPER MATERIAL/THICKNESS	-/IN	MILD STEEL
33.	ROOM MATERIAL/THICKNESS	-/IN	
34.	CORROSION ALLOWANCE, SHELL/HOPPER	IN	
35.	HOPPER OUTLET SIZE/CONFIGURATION	IN	60" DIA
36.	MAXIMUM ALLOWABLE WORKING PRESSURE	PSIG	14
37.	MAXIMUM ALLOWABLE EXTERNAL ROOF LOAD	PSF	25
38.	OTHER		
39.			
40.			
41.			

9110227.0510

UNITED ENGINEERS & CONSTRUCTORS A Raytheon Company Western Operations	EQUIPMENT DATA SHEET ☒ CDR ☐ TITLE I ☐ TITLE II ☐ TITLE III	ITEM NUMBER T-05-207	PAGE 3 OF 3
CUSTOMER & LOCATION DOE-RL/WHC HANFORD, WA	PROJECT WRAP FACILITY MODULE 2A	UE&C JOB NO. 6237.006 ACCOUNT NO.	DATE: 05/21/92 BY: JPJ

REVISIONS (DATE & BY)	A		B		C		D	
	E		F		G		H	

SERVICE	MANUFACTURER	NO. REQ'D.	SOURCE OF QUOTE
BULK SOLIDS STORAGE SILO		1	

ACCESSORIES

42.	HOPPER DISCHARGE DEVICE TYPE		ROTARY VALVE
43.	HOPPER DISCHARGE DEVICE CAPACITY	CFH	60
44.	SILO BIN VENT FILTER CAPACITY	CFM	
45.	SILO BIN VENT FILTER AND AIR TO CLOTH RATIO		
46.	EXPLOSION VENT TYPE		
47.	EXPLOSION VENT AREA REQUIRED	SQ FT	
348.	LADDERS/PLATFORMS		
49.			
50.	PRESSURE/VACUUM RELIEF DEVICE TYPE		
51.	PRESSUR/VACCUM RELIEF DEVICE CAPACITY	CFM	
52.	OTHER		LOAD CELLS
53.			
54.			
55.			

9413227.0549

NO. VESSELS REQ'D. (☐ HORIZ - ☒ VERT.) 1	CUSTOMER: DOE-RL/WHC
SHELL DIA. ☒ I.D. - ☐ O.D.: 3'-0"	PROJECT: WRAP FACILITY MODULE 2A
SHELL THICKNESS: BY VENDOR	LOCATION: HANFORD, WA
HEADS THICKNESS: BY VENDOR	☒ CDR ☐ TITLE I ☐ TITLE II ☐ TITLE III
SHELL & HEAD THICKNESS INCLUDE C.A: BY VENDOR	
SHELL LENGTH (SEAM TO SEAM): 2'-0"	
SUPPORT: 3 LOAD CELLS @ KNUCKLE	

ITEM NO. T-05-208

CODE: DESIGN CONDITIONS:

	OPER.	DESIGN	ALLOW.
PRESS. (PSIG)	7	14	
TEMP. (°F)	60	100	

CORR. ALLOW. SHELL: HEADS:

X-RAY: STRESS RELIEF:

WINDLOAD:

MATERIALS: ALL MILD STEEL

HEADS:

SHELL: BY VENDOR

NOZZLES & FLANGES:

GASKETS: NITRILE

NOZZLES & OPENINGS	NO.	SIZE-RATING-FACE
1. INLET	1	6" - - FF
2. LOAD CELLS	3	
3. OUTLET	1	6' - - FF
4.		
5.		
6.		
7		
8.		
9.		
10.		
11.		
12.		
13.		
14.		
15.		

INTERNALS & ACCESSORIES	FURNISHED BY VESSEL PAD.	FURNISHED BY OTHERS
FILTER ELEM.		
PACKING		
INSUL. RINGS		
LADDERS & PLATFORMS		

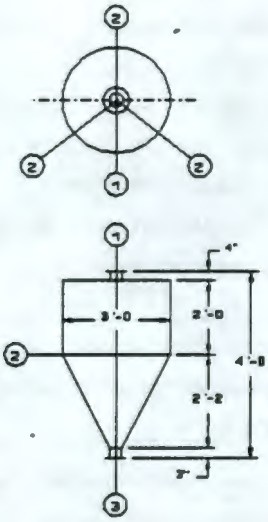

NOTES: 1. ALL COUPLING 6000#, UNLESS OTHERWISE

NO.	DATE	BY	REVISIONS

VESSEL: BLENDED POWDER BATCH WEIGH HOPPER

FOR:

PLANT:

LOCATION:

ORDER NO.: 6237.006 ITEM NO.:

MFGR.:

DATE: 05/21/92 BY: JPJ

UNITED ENGINEERS & CONSTRUCTORS
A Raytheon Company
Western Operations

UNITED ENGINEERS & CONSTRUCTORS A Raytheon Company Western Operations	EQUIPMENT DATA SHEET ☒ CDR ☐ TITLE I ☐ TITLE II ☐ TITLE III	ITEM NUMBER T-05-208	PAGE 1 OF 3
CUSTOMER & LOCATION DOE-RL/WHC HANFORD, WA	PROJECT WRAP FACILITY MODULE 2A	UE&C JOB NO. 6237.006 / ACCOUNT NO.	DATE: 05/21/92 / BY: JPJ

REVISIONS (DATE & BY)	A		B		C		D	
	E		F		G		H	

SERVICE	MANUFACTURER	NO. REQ'D.	SOURCE OF QUOTE
BLENDED POWDER BATCH WEIGH HOPPER		1	

CONDITIONS OF SERVICE

1.	MATERIAL STORED		BLENDED POWDER (3:1, BFS:OPC)
2.	BULK DENSITY (FOR VOLUME)	PCF	65
3.	BULK DENSITY (FOR WEIGHT)	PCF	75
4.	PARTICLE SIZE RANGE		< 100 MESH → 1/8"
5.	MOISTURE CONTENT	%	5
6.	ANGLE OF REPOSE	DEG	30
7.	ABRASION		VERY ABRASIVE
8.	CORROSION		NO
9.	ABSORPTION		
10.	EXPLOSION HAZARD		
11.	CEMA MATERIAL CODE (IF KNOWN)		65 B, 37MU
12.	MATERIAL TEMPERATURE (DES/OPER)	°F	100/60
13.	LOCATION (INDOOR/OUTDOOR)		INDOOR
14.	USEABLE CAPACITY	CU FT	17
15.	INTERNAL PRESSURE (DES/OPER)	PSIG	14
16.	WIND: (ANSI A53.1) TABLE/EXPOSURE/SPD		
17.	SEISMIC: (ANSI A58.1) ZONE		2B, IMPORYANCE FACTOR = 1.25
18.	EXPLOSION VENTING DESIGN CRITERIA		
19.			
20.	FLOW RATE (IN/OUT)	CFH	60/60
21.	)PPER DESIGN		FUNNEL FLOW
22.	OTHER		
23.			
24.			
25.			

9413227.0551

UNITED ENGINEERS & CONSTRUCTORS A Raytheon Company Western Operations	EQUIPMENT DATA SHEET ☒ CDR ☐ TITLE I ☐ TITLE II ☐ TITLE III	ITEM NUMBER T-05-208	PAGE 2 OF 3
CUSTOMER & LOCATION DOE-RL/WHC HANFORD, WA	PROJECT WRAP FACILITY MODULE 2A	UE&C JOB NO. 6237.006	DATE: 05/21/92
		ACCOUNT NO.	BY: JPJ

REVISIONS (DATE & BY)	A		B		C		D	
	E		F		G		H	

SERVICE	MANUFACTURER	NO. REQ'D.	SOURCE OF QUOTE
BLENDED POWDER BATCH WEIGH HOPPER		1	

DESIGN

26.	TOTAL VOLUME	CU FT	20
27.	TYPE (WELDED OR BOLTED)		WELDED
28.	SILO HEIGHT, HOPPER OUTLET TO ROOF	FT	4'-6"
29.	SILO INSIDE DIAMETER	FT	3'-0"
30.	HOPPER CONE ANGLE FROM HORIZONTAL	DEG	60
31.	SHELL MATERIAL/THICKNESS	-/IN	MILD STEEL
32.	HOPPER MATERIAL/THICKNESS	-/IN	MILD STEEL
33.	ROOM MATERIAL/THICKNESS	-/IN	
34.	CORROSION ALLOWANCE, SHELL/HOPPER	IN	
35.	HOPPER OUTLET SIZE/CONFIGURATION	IN	6" DIA
36.	MAXIMUM ALLOWABLE WORKING PRESSURE	PSIG	14
37.	MAXIMUM ALLOWABLE EXTERNAL ROOF LOAD	PSF	25
38.	OTHER		
39.			
40.			
41.			

UNITED ENGINEERS & CONSTRUCTORS A Raytheon Company Western Operations	EQUIPMENT DATA SHEET ☒ CDR ☐ TITLE I ☐ TITLE II ☐ TITLE III	ITEM NUMBER T-05-208	PAGE 3 OF 3

CUSTOMER & LOCATION	PROJECT	UE&C JOB NO. 6237.006	DATE: 05/21/92
DOE-RL/WHC HANFORD, WA	WRAP FACILITY MODULE 2A	ACCOUNT NO.	BY: JPJ

REVISIONS (DATE & BY)	A		B		C		D	
	E		F		G		H	

SERVICE	MANUFACTURER	NO. REQ'D.	SOURCE OF QUOTE
BLENDED POWDER BATCH WEIGH HOPPER		1	

ACCESSORIES

42.	HOPPER DISCHARGE DEVICE TYPE		ROTARY VALVE
43.	HOPPER DISCHARGE DEVICE CAPACITY	CFH	60
44.	SILO BIN VENT FILTER CAPACITY	CFM	
45.	SILO BIN VENT FILTER AND AIR TO CLOTH RATIO		
46.	EXPLOSION VENT TYPE		
47.	EXPLOSION VENT AREA REQUIRED	SQ FT	
348.	LADDERS/PLATFORMS		LOAD CELLS
49.			
50.	PRESSURE/VACUUM RELIEF DEVICE TYPE		
51.	PRESSUR/VACCUM RELIEF DEVICE CAPACITY	CFM	
52.	OTHER		
53.			
54.			
55.			

9413227.0553

NO. VESSELS REQ'D. (☐ HORIZ - ☒ VERT.) 1	CUSTOMER: DOE-RL/WHC
SHELL DIA. ☒ I.D. - ☐ O.D.: 3'-0"	PROJECT: WRAP FACILITY MODULE 2A
SHELL THICKNESS: BY VENDOR	LOCATION: HANFORD, WA
HEADS THICKNESS. BY VENDOR	☒ CDR ☐ TITLE I ☐ TITLE II ☐ TITLE III
SHELL & HEAD THICKNESS INCLUDE C.A: BY VENDOR	
SHELL LENGTH (SEAM TO SEAM): 4'-4"	
SUPPORT: 3 LOAD CELLS AT KNUCKLE	
CODE: DESIGN CONDITIONS:	

ITEM NO. T-05-209

	OPER.	DESIGN	ALLOW.
PRESS. (PSIG)	7	14	
TEMP. (°F)	60	100	

CORR. ALLOW. SHELL: HEADS:

X-RAY: STRESS RELIEF:

WINDLOAD:

MATERIALS: ALL MILD STEEL

HEADS:

SHELL: BY VENDOR

NOZZLES & FLANGES:

GASKETS: NITRILE

NOZZLES &	NO.	SIZE-RATING-FACE
1. INLET	1	2" - 150 - FF
2. DUST COLLECTOR	1	
3. OUTLET	1	6" - 150 - FF
4. LOAD CELLS	3	
5. LEVEL CONTROL	3	1.25" - 6000 #
6.		
7		
8.		
9.		
10.		
11.		
12.		
13.		
14.		
15.		

INTERNALS & ACCESSORIES	FURNISHED BY VESSEL PAD.	FURNISHED BY OTHERS
FILTER ELEM.		
PACKING		
VESSEL WT.		LB EST
LADDERS & PLATFORMS		

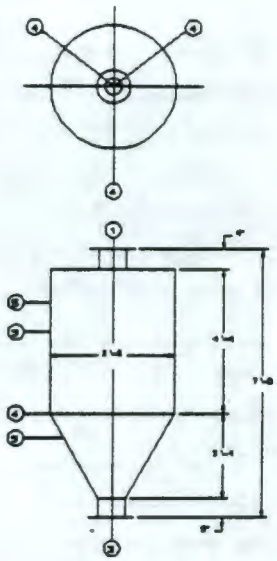

NOTES: 1. ALL COUPLING 6000#, UNLESS OTHERWISE

NO.	DATE	BY	REVISIONS

VESSEL: OPC SILO

FOR:

PLANT:

LOCATION:

ORDER NO.: 6237.006 ITEM NO.:

MFGR.:

DATE: 05/12/92 BY: JPJ

UNITED ENGINEERS & CONSTRUCTORS
A Raytheon Company
Western Operations

UNITED ENGINEERS & CONSTRUCTORS A Raytheon Company Western Operations	EQUIPMENT DATA SHEET ☒ CDR ☐ TITLE I ☐ TITLE II ☐ TITLE III	ITEM NUMBER T-05-209	PAGE 1 OF 3
CUSTOMER & LOCATION DOE-RL/WHC HANFORD, WA	PROJECT WRAP FACILITY MODULE 2A	UE&C JOB NO. 6237.006	DATE: 05/12/92
		ACCOUNT NO.	BY: JPJ

REVISIONS (DATE & BY)	A		B		C		D	
	E		F		G		H	

SERVICE	MANUFACTURER	NO. REQ'D.	SOURCE OF QUOTE
OPC SILO		1	

CONDITIONS OF SERVICE

1.	MATERIAL STORED		ORDINARY PORTLAND CEMENT (OPC)
2.	BULK DENSITY (FOR VOLUME)	PCF	80
3.	BULK DENSITY (FOR WEIGHT)	PCF	100
4.	PARTICLE SIZE RANGE		< 100 MESH
5.	MOISTURE CONTENT	%	7
6.	ANGLE OF REPOSE	DEG	30-40
7.	ABRASION		MILDLY ABRASIVE
8.	CORROSION		NO
9.	ABSORPTION		
10.	EXPLOSION HAZARD		
11.	CEMA MATERIAL CODE (IF KNOWN)		80 A_{100} 26M
12.	MATERIAL TEMPERATURE (DES/OPER)	°F	100/60
13.	LOCATION (INDOOR/OUTDOOR)		INDOOR
14.	USEABLE CAPACITY	CU FT	30
15.	INTERNAL PRESSURE (DES/OPER)	PSIG	14
16.	WIND: (ANSI A53.1) TABLE/EXPOSURE/SPD		
17.	SEISMIC: (ANSI A58.1) ZONE		2B, IMPORTANCE FACTOR = 1.25
18.	EXPLOSION VENTING DESIGN CRITERIA		
19.			
20.	FLOW RATE (IN/OUT)	CFH	400/60
21.	HOPPER DESIGN (MASS OR EXPANDED FLOW)		FUNNEL FLOW
22.	OTHER		
23.			
24.			
25.			

9413227.0555

UNITED ENGINEERS & CONSTRUCTORS A Raytheon Company Western Operations	EQUIPMENT DATA SHEET ☒ CDR ☐ TITLE I ☐ TITLE II ☐ TITLE III	ITEM NUMBER T-05-209	PAGE 2 OF 3

CUSTOMER & LOCATION	PROJECT	UE&C JOB NO.	DATE: 05/12/92
DOE-RL/WHC HANFORD, WA	WRAP FACILITY MODULE 2A	6237.006	
		ACCOUNT NO.	BY: JPJ

REVISIONS (DATE & BY)	A		B		C		D	
	E		F		G		H	

SERVICE	MANUFACTURER	NO. REQ'D.	SOURCE OF QUOTE
BULK SOLIDS STORAGE SILO		1	

DESIGN

26.	TOTAL VOLUME	CU FT	35
27.	TYPE (WELDED OR BOLTED)		WELDED
28.	SILO HEIGHT, HOPPER OUTLET TO ROOF	FT	6'-0"
29.	SILO INSIDE DIAMETER	FT	3'-0"
30.	HOPPER CONE ANGLE FROM HORIZONTAL	DEG	60
31.	SHELL MATERIAL/THICKNESS	-/IN	MILD STEEL
32.	HOPPER MATERIAL/THICKNESS	-/IN	MILD STEEL
33.	ROOM MATERIAL/THICKNESS	-/IN	
34.	CORROSION ALLOWANCE, SHELL/HOPPER	IN	
35.	HOPPER OUTLET SIZE/CONFIGURATION	IN	6" DIA
36.	MAXIMUM ALLOWABLE WORKING PRESSURE	PSIG	14
37.	MAXIMUM ALLOWABLE EXTERNAL ROOF LOAD	PSF	25
38.	OTHER		
39.			
40.			
41.			

9413227.0556

UNITED ENGINEERS & CONSTRUCTORS A Raytheon Company Western Operations	EQUIPMENT DATA SHEET ☒ CDR ☐ TITLE I ☐ TITLE II ☐ TITLE III	ITEM NUMBER T-05-209	PAGE 3 OF 3
CUSTOMER & LOCATION DOE-RL/WHC HANFORD, WA	PROJECT WRAP FACILITY MODULE 2A	UE&C JOB NO. 6237.006	DATE: 05/21/92
		ACCOUNT NO.	BY: JPJ

REVISIONS (DATE & BY)	A		B		C		D	
	E		F		G		H	

SERVICE	MANUFACTURER	NO. REQ'D.	SOURCE OF QUOTE
OPC SILO		1	

ACCESSORIES

42.	HOPPER DISCHARGE DEVICE TYPE		ROTARY VALVE
43.	HOPPER DISCHARGE DEVICE CAPACITY	CFH	100
44.	SILO BIN VENT FILTER CAPACITY	ACFM	100
45.	SILO BIN VENT FILTER AND AIR TO CLOTH RATIO		
46.	EXPLOSION VENT TYPE		
47.	EXPLOSION VENT AREA REQUIRED	SQ FT	
348.	LADDERS/PLATFORMS		
49.			
50.	PRESSURE/VACUUM RELIEF DEVICE TYPE		
51.	PRESSUR/VACCUM RELIEF DEVICE CAPACITY	CFM	
52.	OTHER		LOAD CELLS
53.	(1) PADDLE TYPE ROTARY BIN LEVEL CONTROLLERS		
54.			
55.			

9413227.0557

NO. VESSELS REQ'D. (☐ HORIZ - ☒ VERT.) 1	CUSTOMER: DOE-RL/WHC
SHELL DIA. ☒ I.D. - ☐ O.D.: 6'-0"	PROJECT: WRAP FACILITY MODULE 2A
SHELL THICKNESS: BY VENDOR	LOCATION: HANFORD, WA
HEADS THICKNESS: BY VENDOR	☒ CDR ☐ TITLE I ☐ TITLE II ☐ TITLE III
SHELL & HEAD THICKNESS INCLUDE C.A: BY VENDOR	
SHELL LENGTH (SEAM TO SEAM): 4'-4"	
SUPPORT: 3 LOAD CELLS @ KNUCKLE	

ITEM NO. T-06-210

CODE: DESIGN CONDITIONS:

	OPER.	DESIGN	ALLOW.
PRESS. (PSIG)	7	14	
TEMP. (°F)	60	100	

CORR. ALLOW. SHELL: HEADS:

X-RAY: STRESS RELIEF:

WINDLOAD:

MATERIALS: ALL MILD STEEL

HEADS:

SHELL: BY VENDOR

NOZZLES & FLANGES:

GASKETS: NITRILE

NOZZLES & OPENINGS	NO.	SIZE-RATING-FACE
1. PFA INLET	1	2" - 150 - FF
2. ADDITIVE INLET		2" - 150 - FF
3. LOAD CELLS	3	
4. LEVEL CONTROL	3	1/25" - 6,000 #
5. OUTLET	1	6" - 150 - FF
6. DUST COLLECTOR	1	
7		
8.		
9.		
10.		
11.		
12.		
13.		
14.		
15.		

INTERNALS & ACCESSORIES	FURNISHED BY VESSEL PAD.	FURNISHED BY OTHERS
FILTER ELEM.		
PACKING		
VESSEL WEIGHT		LB EST
LADDERS & PLATFORMS		

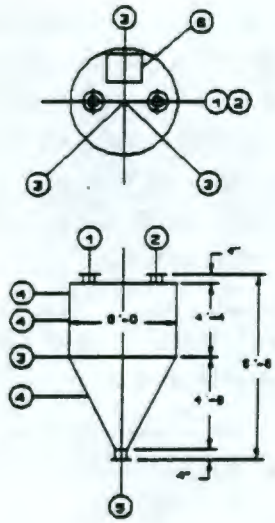

NOTES: 1. ALL COUPLING 6000#, UNLESS OTHERWISE

NO.	DATE	BY	REVISIONS

VESSEL: PFA DAY SILO

FOR:

PLANT:

LOCATION:

ORDER NO.: 6237.006 ITEM NO.:

MFGR.:

DATE: 06/21/92 BY: JPJ

UNITED ENGINEERS & CONSTRUCTORS
A Raytheon Company
Western Operations

UNITED ENGINEERS & CONSTRUCTORS A Raytheon Company Western Operations	EQUIPMENT DATA SHEET ☒ CDR ☐ TITLE I ☐ TITLE II ☐ TITLE III	ITEM NUMBER T-05-210	PAGE 1 OF 3
CUSTOMER & LOCATION DOE-RL/WHC HANFORD, WA	PROJECT WRAP FACILITY MODULE 2A	UE&C JOB NO. 6237.006	DATE: 05/21/92
		ACCOUNT NO.	BY: JPJ

REVISIONS (DATE & BY)	A		B		C		D	
	E		F		G		H	

SERVICE	MANUFACTURER	NO. REQ'D.	SOURCE OF QUOTE
PFA DAY SILO		1	

CONDITIONS OF SERVICE

1.	MATERIAL STORED		PULVERIZED FLY ASH (PFA)
2.	BULK DENSITY (FOR VOLUME)	PCF	40
3.	BULK DENSITY (FOR WEIGHT)	PCF	45
4.	PARTICLE SIZE RANGE		< 100 MESH
5.	MOISTURE CONTENT	%	5
6.	ANGLE OF REPOSE	DEG	42
7.	ABRASION		MILDLY ABRASIVE
8.	CORROSION		NO
9.	ABSORPTION		
10.	EXPLOSION HAZARD		
11.	CEMA MATERIAL CODE (IF KNOWN)		40 A_{100} 25
12.	MATERIAL TEMPERATURE (DES/OPER)	°F	100/60
13.	LOCATION (INDOOR/OUTDOOR)		INDOOR
14.	USEABLE CAPACITY	CU FT	120
15.	INTERNAL PRESSURE (DES/OPER)	PSIG	14
16.	WIND: (ANSI A53.1) TABLE/EXPOSURE/SPD		
17.	SEISMIC: (ANSI A58.1) ZONE		2B, IMPORTANCE FACTOR = 1.25
18.	EXPLOSION VENTING DESIGN CRITERIA		
19.			
20.	FLOW RATE (IN/OUT)	CFH	400/60
21.	HOPPER DESIGN (MASS OR EXPANDED FLOW)		FUNNEL FLOW
22.	OTHER		
23.			
24.			
25.			

9413227.0559

UNITED ENGINEERS & CONSTRUCTORS A Raytheon Company Western Operations	EQUIPMENT DATA SHEET ☒ CDR ☐ TITLE I ☐ TITLE II ☐ TITLE III	ITEM NUMBER. T-05-210	PAGE 2 OF 3

CUSTOMER & LOCATION	PROJECT	UE&C JOB NO.	DATE: 05/21/92
DOE-RL/WHC HANFORD, WA	WRAP FACILITY MODULE 2A	6237.006	
		ACCOUNT NO.	BY: JPJ

REVISIONS (DATE & BY)	A		B		C		D	
	E		F		G		H	

SERVICE	MANUFACTURER	NO. REQ'D.	SOURCE OF QUOTE
PFA DAY SILO		1	

DESIGN

26.	TOTAL VOLUME	CU FT	170
27.	TYPE (WELDED OR BOLTED)		WELDED
28.	SILO HEIGHT, HOPPER OUTLET TO ROOF	FT	
29.	SILO INSIDE DIAMETER	FT	6'-0"
30.	HOPPER CONE ANGLE FROM HORIZONTAL	DEG	60
31.	SHELL MATERIAL/THICKNESS	-/IN	MILD STEEL
32.	HOPPER MATERIAL/THICKNESS	-/IN	MILD STEEL
33.	ROOM MATERIAL/THICKNESS	-/IN	
34.	CORROSION ALLOWANCE, SHELL/HOPPER	IN	
35.	HOPPER OUTLET SIZE/CONFIGURATION	IN	6" DIA
36.	MAXIMUM ALLOWABLE WORKING PRESSURE	PSIG	14
37.	MAXIMUM ALLOWABLE EXTERNAL ROOF LOAD	PSF	25
38.	OTHER		
39.			
40.			
41.			

9413227.0560

UNITED ENGINEERS & CONSTRUCTORS A Raytheon Company Western Operations	EQUIPMENT DATA SHEET ☒ CDR ☐ TITLE I ☐ TITLE II ☐ TITLE III	ITEM NUMBER T-05-210	PAG
CUSTOMER & LOCATION DOE-RL/WHC HANFORD, WA	PROJECT WRAP FACILITY MODULE 2A	UE&C JOB NO. 6237.006 ACCOUNT NO.	DATE: 05/21/ BY: JPJ

REVISIONS (DATE & BY)	A		B		C		D	
	E		F		G		H	

SERVICE	MANUFACTURER	NO. REQ'D.	SOURCE OF QUOTE
PFA DAY SILO		1	

ACCESSORIES

42.	HOPPER DISCHARGE DEVICE TYPE		ROTARY VALVE
43.	HOPPER DISCHARGE DEVICE CAPACITY	CFH	60
44.	SILO BIN VENT FILTER CAPACITY	ACFM	100
45.	SILO BIN VENT FILTER AND AIR TO CLOTH RATIO		
46.	EXPLOSION VENT TYPE		
47.	EXPLOSION VENT AREA REQUIRED	SQ FT	
348.	LADDERS/PLATFORMS		BY OTHERS
49.			
50.	PRESSURE/VACUUM RELIEF DEVICE TYPE		
51.	PRESSUR/VACCUM RELIEF DEVICE CAPACITY	CFM	
52.	OTHER		LOAD CELLS
53.	(3) PADDLE TYPE ROTARY BIN LEVEL CONTROLLERS		
54.			
55.			

9413227.0561

NO. VESSELS REQ'D. (☐ HORIZ - ☒ VERT.) 1	CUSTOMER: DOE-RL/WHC
SHELL DIA. ☒ I.D. - ☐ O.D.:	PROJECT: WRAP FACILITY MODULE 2A
SHELL THICKNESS: BY VENDOR	LOCATION: HANFORD, WA
HEADS THICKNESS: BY VENDOR	☒ CDR ☐ TITLE I ☐ TITLE II ☐ TITLE III
SHELL & HEAD THICKNESS INCLUDE C.A: BY VENDOR	
SHELL LENGTH (SEAM TO SEAM): 2'-0"	
SUPPORT: 3 LOAD CELLS @ KNUCKLE	

ITEM NO. T-05-211

CODE: DESIGN CONDITIONS:

	OPER.	DESIGN	ALLOW.
PRESS. (PSIG)	7	14	
TEMP. (°F)	60	100	

CORR. ALLOW. SHELL: HEADS:

X-RAY: STRESS RELIEF:

WINDLOAD:

MATERIALS: ALL MILD STEEL

HEADS:

SHELL: BY VENDOR

NOZZLES & FLANGES:

GASKETS: NITRILE

NOZZLES & OPENINGS	NO.	SIZE-RATING-FACE
1. INLET	1	6" - - FF
2. LEVEL	1	1.25 - 6,000 #
3. OUTLET	1	6" - - FF
4. LOAD CELLS	3	
5.		
6.		
7		
8.		
9.		
10.		
11.		
12.		
13.		
14.		
15.		

INTERNALS & ACCESSORIES	FURNISHED BY VESSEL PAD.	FURNISHED BY OTHERS
FILTER ELEM.		
PACKING		
INSUL. RINGS		
LADDERS & PLATFORMS		

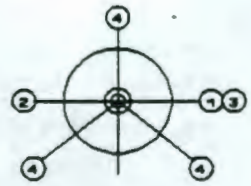

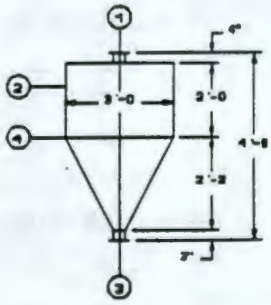

NOTES: 1. ALL COUPLING 6000#, UNLESS OTHERWISE

NO.	DATE	BY	REVISIONS

VESSEL: PFA WEIGH HOPPER

FOR:

PLANT:

LOCATION:

ORDER NO.: 6237.006 ITEM NO.:

MFGR.:

DATE: 05/21/92 BY: JPJ

UNITED ENGINEERS & CONSTRUCTORS
A Raytheon Company
Western Operations

9413277.0562

UNITED ENGINEERS & CONSTRUCTORS A Raytheon Company Western Operations	EQUIPMENT DATA SHEET ☒ CDR ☐ TITLE I ☐ TITLE II ☐ TITLE III	ITEM NUMBER T-05-211	PAGE 1 OF 3

CUSTOMER & LOCATION	PROJECT	UE&C JOB NO. 6237.006	DATE: 05/21/92
DOE-RL/WHC HANFORD, WA	WRAP FACILITY MODULE 2A	ACCOUNT NO.	BY: JPJ

REVISIONS (DATE & BY)	A		B		C		D	
	E		F		G		H	

SERVICE	MANUFACTURER	NO. REQ'D.	SOURCE OF QUOTE
PFA WEIGH HOPPER		1	

CONDITIONS OF SERVICE

1.	MATERIAL STORED		PULVERIZED FLY ASH (PFA)
2.	BULK DENSITY (FOR VOLUME)	PCF	40
3.	BULK DENSITY (FOR WEIGHT)	PCF	45
4.	PARTICLE SIZE RANGE		< 100 MESH
5.	MOISTURE CONTENT	%	5
6.	ANGLE OF REPOSE	DEG	42
7.	ABRASION		MILDLY ABRASIVE
8.	CORROSION		NO
9.	ABSORPTION		
10.	EXPLOSION HAZARD		NONE
11.	CEMA MATERIAL CODE (IF KNOWN)		40 A_{100} 25
12.	MATERIAL TEMPERATURE (DES/OPER)	°F	100/60
13.	LOCATION (INDOOR/OUTDOOR)		INDOOR
14.	USEABLE CAPACITY	CU FT	16
15.	INTERNAL PRESSURE (DES/OPER)	PSIG	14/7
16.	WIND: (ANSI A53.1) TABLE/EXPOSURE/SPD		
17.	SEISMIC: (ANSI A58.1) ZONE		2B, IMPORTANCE FACTOR = 1.25
18.	EXPLOSION VENTING DESIGN CRITERIA		
19.			
20.	FLOW RATE (IN/OUT)	CFH	60/60
21.	HOPPER DESIGN		FUNNEL FLOW
22.	OTHER		
23.			
24.			
25.			

9413227.0563

UNITED ENGINEERS & CONSTRUCTORS A Raytheon Company Western Operations	EQUIPMENT DATA SHEET ☒ CDR ☐ TITLE I ☐ TITLE II ☐ TITLE III	ITEM NUMBER T-05-211	PAGE 2 OF 3
CUSTOMER & LOCATION DOE-RL/WHC HANFORD, WA	PROJECT WRAP FACILITY MODULE 2A	UE&C JOB NO. 6237.006 ACCOUNT NO.	DATE: 05/21/92 BY: JPJ

REVISIONS (DATE & BY)	A		B		C		D	
	E		F		G		H	

SERVICE	MANUFACTURER	NO. REQ'D.	SOURCE OF QUOTE
PFA WEIGH HOPPER		1	

DESIGN

26.	TOTAL VOLUME	CU FT	20
27.	TYPE (WELDED OR BOLTED)		WELDED
28.	SILO HEIGHT, HOPPER OUTLET TO ROOF	FT	4'-5"
29.	SILO INSIDE DIAMETER	FT	3'-0"
30.	HOPPER CONE ANGLE FROM HORIZONTAL	DEG	60
31.	SHELL MATERIAL/THICKNESS	-/IN	MILD STEEL/BY VENDOR
32.	HOPPER MATERIAL/THICKNESS	-/IN	MILD STEEL/BY VENDOR
33.	ROOM MATERIAL/THICKNESS	-/IN	
34.	CORROSION ALLOWANCE, SHELL/HOPPER	IN	
35.	HOPPER OUTLET SIZE/CONFIGURATION	IN	6" DIA
36.	MAXIMUM ALLOWABLE WORKING PRESSURE	PSIG	14
37.	MAXIMUM ALLOWABLE EXTERNAL ROOF LOAD	PSF	25
38.	OTHER		
39.			
40.			
41.			

9413227.0564

UNITED ENGINEERS & CONSTRUCTORS A Raytheon Company Western Operations	EQUIPMENT DATA SHEET ☒ CDR ☐ TITLE I ☐ TITLE II ☐ TITLE III	ITEM NUMBER T-05-211	PAGE 3 OF 3

CUSTOMER & LOCATION	PROJECT	UE&C JOB NO. 6237.006	DATE: 05/21/92
DOE-RL/WHC HANFORD, WA	WRAP FACILITY MODULE 2A	ACCOUNT NO.	BY: JPJ

REVISIONS (DATE & BY)	A		B		C		D	
	E		F		G		H	

SERVICE	MANUFACTURER	NO. REQ'D.	SOURCE OF QUOTE
PFA WEIGH HOPPER		1	

ACCESSORIES

42.	HOPPER DISCHARGE DEVICE TYPE		ROTARY VALVE
43.	HOPPER DISCHARGE DEVICE CAPACITY	CFH	60
44.	SILO BIN VENT FILTER CAPACITY	CFM	
45.	SILO BIN VENT FILTER AND AIR TO CLOTH RATIO		
46.	EXPLOSION VENT TYPE		
47.	EXPLOSION VENT AREA REQUIRED	SQ FT	
348.	LADDERS/PLATFORMS		
49.			
50.	PRESSURE/VACUUM RELIEF DEVICE TYPE		
51.	PRESSUR/VACCUM RELIEF DEVICE CAPACITY	CFM	
52.	OTHER		LOAD CELLS
53.			
54.			
55.			

9413227.0565

NO. VESSELS REQ'D. (☐ HORIZ - ☒ VERT.) 1	CUSTOMER: DOE-RL/WHC
SHELL DIA. ☒ I.D. - ☐ O.D.: 3'-0"	PROJECT: WRAP FACILITY MODULE 2A
SHELL THICKNESS: BY VENDOR	LOCATION: HANFORD, WA
HEADS THICKNESS: BY VENDOR	☒ CDR ☐ TITLE I ☐ TITLE II ☐ TITLE III
SHELL & HEAD THICKNESS INCLUDE C.A: BY VENDOR	
SHELL LENGTH (SEAM TO SEAM): 3"	
SUPPORT: 3 LOAD CELLS @ KNUCKLE	
CODE: DESIGN CONDITIONS:	

ITEM NO. T-05-212

	OPER.	DESIGN	ALLOW.
PRESS. (PSIG)	7	14	
TEMP. (°F)	60	100	

CORR. ALLOW. SHELL: HEADS:

X-RAY: STRESS RELIEF:

WINDLOAD:

MATERIALS: ALL MILD STEEL

HEADS:

SHELL: BY VENDOR

NOZZLES & FLANGES:

GASKETS: NITRILE

NOZZLES & OPENINGS	NO.	SIZE-RATING-FACE
1. OPC INLET	1	7" - - FF
2. PFA INLET	1	10" - - FF
3. BFS INLET	1	10"- - FF
4. POLYMER	1	1" - SCREWED
5. PROCESS H_2O	1	1" - SCREWED
6. RECIRCULATOR	1	6' - 150# - FF
7 OUTLET	1	6' - 150# - FF
8. LOAD CELLS	3	
9.		
10.		
11.		
12.		
13.		
14.		
15.		

INTERNALS & ACCESSORIES	FURNISHED BY VESSEL PAD.	FURNISHED BY OTHERS
FILTER ELEM.		
PACKING		
INSUL. RINGS		
LADDERS & PLATFORMS		

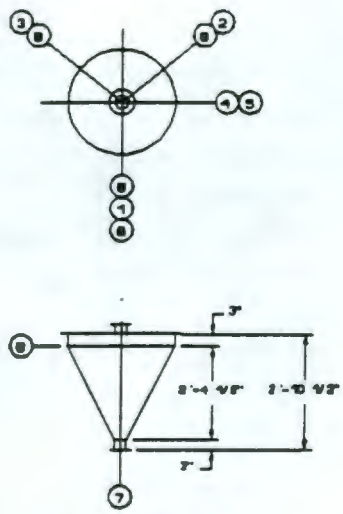

NOTES: 1. ALL COUPLING 6000#, UNLESS OTHERWISE

NO.	DATE	BY	REVISIONS

VESSEL: WET GROUT MIXING TANK

FOR:

PLANT:

LOCATION:

ORDER NO.: 6237.006 ITEM NO.:

MFGR.:

DATE: 05/21/92 BY: JPJ

UNITED ENGINEERS & CONSTRUCTORS
A Raytheon Company
Western Operations

UNITED ENGINEERS & CONSTRUCTORS A Raytheon Company Western Operations	EQUIPMENT DATA SHEET ☒ CDR ☐ TITLE I ☐ TITLE II ☐ TITLE III	ITEM NUMBER T-05-212	PAGE 1 OF 3
CUSTOMER & LOCATION DOE-RL/WHC HANFORD, WA	PROJECT WRAP FACILITY MODULE 2A	UE&C JOB NO. 6237.006	DATE: 05/21/92
		ACCOUNT NO.	BY: JPJ

REVISIONS (DATE & BY)	A		B		C		D	
	E		F		G		H	

SERVICE	MANUFACTURER	NO. REQ'D.	SOURCE OF QUOTE
WET GROUT MIXING TANK		1	

CONDITIONS OF SERVICE

1.	MATERIAL STORED		WET MIXED GROUT (3:1, BFS:OPE, 0.35 WATER SOLIDS RATIO)
2.	BULK DENSITY (FOR VOLUME)	PCF	80
3.	BULK DENSITY (FOR WEIGHT)	PCF	100
4.	PARTICLE SIZE RANGE		1/8" MINUS
5.	MOISTURE CONTENT	%	100
6.	ANGLE OF REPOSE	DEG	
7.	ABRASION		VERY ABRASIVE
8.	CORROSION		
9.	ABSORPTION		
10.	EXPLOSION HAZARD		
11.	CEMA MATERIAL CODE (IF KNOWN)		65 B, 37 MU
12.	MATERIAL TEMPERATURE (DES/OPER)	°F	100/60
13.	LOCATION (INDOOR/OUTDOOR)		INDOOR
14.	USEABLE CAPACITY	CU FT	5
15.	INTERNAL PRESSURE (DES/OPER)	PSIG	14/7
16.	WIND: (ANSI A53.1) TABLE/EXPOSURE/SPD		
17.	SEISMIC: (ANSI A58.1) ZONE		2B, IMPORTANCE FACTOR - 1.25
18.	EXPLOSION VENTING DESIGN CRITERIA		
19.			
20.	FLOW RATE (IN/OUT)	CFH	60/60
21.	HOPPER DESIGN (MASS OR EXPANDED FLOW)		FUNNEL FLOW
22.	OTHER		
23.			
24.			
25.			

9413227.0567

UNITED ENGINEERS & CONSTRUCTORS A Raytheon Company Western Operations	EQUIPMENT DATA SHEET ☒ CDR ☐ TITLE I ☐ TITLE II ☐ TITLE III	ITEM NUMBER T-05-212	PAGE 2 OF 3

CUSTOMER & LOCATION	PROJECT	UE&C JOB NO. 6237.006	DATE: 05/21/92
DOE-RL/WHC HANFORD, WA	WRAP FACILITY MODULE 2A	ACCOUNT NO.	BY: JPJ

REVISIONS (DATE & BY)	A		B		C		D	
	E		F		G		H	

SERVICE	MANUFACTURER	NO. REQ'D.	SOURCE OF QUOTE
WET GROUT MIXING TANK		1	

DESIGN

26.	TOTAL VOLUME	CU FT	8
27.	TYPE (WELDED OR BOLTED)		WELDED
28.	SILO HEIGHT, HOPPER OUTLET TO ROOF	FT	2'-7.5"
29.	SILO INSIDE DIAMETER	FT	3'-0"
30.	HOPPER CONE ANGLE FROM HORIZONTAL	DEG	60
31.	SHELL MATERIAL/THICKNESS	-/IN	SS/BY VENDOR
32.	HOPPER MATERIAL/THICKNESS	-/IN	SS/BY VENDOR
33.	ROOM MATERIAL/THICKNESS	-/IN	
34.	CORROSION ALLOWANCE, SHELL/HOPPER	IN	
35.	HOPPER OUTLET SIZE/CONFIGURATION	IN	6" DIA
36.	MAXIMUM ALLOWABLE WORKING PRESSURE	PSIG	14
37.	MAXIMUM ALLOWABLE EXTERNAL ROOF LOAD	PSF	25
38.	OTHER		
39.			
40.			
41.			

9413227.0560

UNITED ENGINEERS & CONSTRUCTORS A Raytheon Company Western Operations	EQUIPMENT DATA SHEET ☒ CDR ☐ TITLE I ☐ TITLE II ☐ TITLE III	ITEM NUMBER T-05-212	PAGE 3 OF 3
CUSTOMER & LOCATION DOE-RL/WHC HANFORD, WA	PROJECT WRAP FACILITY MODULE 2A	UE&C JOB NO. 6237.006	DATE: 05/21/92
		ACCOUNT NO.	BY: SMM

REVISIONS (DATE & BY)	A		B		C		D	
	E		F		G		H	

SERVICE	MANUFACTURER	NO. REQ'D.	SOURCE OF QUOTE
WET GROUT MIXING TANK		1	

ACCESSORIES

42.	HOPPER DISCHARGE DEVICE TYPE		VIBRO GROUT MIXER/PUMP
43.	HOPPER DISCHARGE DEVICE CAPACITY	CFH	12 MIN
44.	SILO BIN VENT FILTER CAPACITY	CFM	
45.	SILO BIN VENT FILTER AND AIR TO CLOTH RATIO		
46.	EXPLOSION VENT TYPE		
47.	EXPLOSION VENT AREA REQUIRED	SQ FT	
348.	LADDERS/PLATFORMS		
49.			
50.	PRESSURE/VACUUM RELIEF DEVICE TYPE		
51.	PRESSUR/VACCUM RELIEF DEVICE CAPACITY	CFM	
52.	OTHER		LOAD CELLS
53.			
54.			
55.			

9413227.0569

UNITED ENGINEERS & CONSTRUCTORS A Raytheon Company Western Operations	EQUIPMENT DATA SHEET ☒ CDR ☐ TITLE I ☐ TITLE II ☐ TITLE III	ITEM NUMBER S-05-201	PAGE 1 OF 1

CUSTOMER & LOCATION	PROJECT	UE&C JOB NO. 6237.006	DATE: 05/05/92
DOE-RL/WHC HANFORD, WA	WRAP FACILITY MODULE 2A	ACCOUNT NO.	BY: JPJ

REVISIONS (DATE & BY)	A		B		C		D	
	E		F		G		H	

SERVICE	MANUFACTURER	NO. REQ'D	SOURCE OF QUOTE
OPC SILO DUST COLLECTOR		1	

TYPE & MODEL: PULSE-JET BIN VENT

CONDITIONS OF SERVICE

DUST OR MATERIAL HANDLED: ORDINARY PORTLAND CEMENT (OPC)

MATERIAL MASS FLOW RATE: 5 LB./HR.

MATERIAL BULK DENSITY: 80 LB./CU.FT.

MATERIAL CHARACTERISTICS: ☒ DRY ☒ ALKALINE ☐ NEUTRAL ☐ SPARKS ☐ DAMP ☐ ACID ☒ ABRASIVE ☐ TOXIC

CONVEYING MEDIUM: TYPE FLUID: AIR — FLOW: 100 ACFM; TEMPERATURE: AMBIENT — RELATIVE HUMIDITY: 15 %

MATERIAL CONCENTRATION: 10 GR./CU.FT. — MINIMUM EXPLOSIVE CONCENTRATION: N/A OZ./CU.FT.

LIMITING O_2 CONCENTRATION: % — INLET PRESSURE: (PSIA)($^{\prime\prime}H_2O$ABS)

TEMPERATURE OF DUST LADEN GAS AT DUST POINTS: AMBIENT

LOCATION: ☒ INDOORS ☐ OUTDOORS — ALTITUDE: 710 AMSL FT.

SERVICE: ☐ CONTINUOUS ☐ INTERMITTENT ☒ DUST RECOVERY ☐ DUST REMOVAL

DUST MATERIAL DISCHARGED TO: T-05-201 SILO

CONSTRUCTION & SPECIFICATIONS

MATERIALS OF CONSTRUCTION: DUST SIDE: — CLEAN SIDE PLENUM:; BAG FELT: — BAG CAGES:

DESIGN PRESSURE: PSIG — DESIGN TEMPERATURE: 9°F TO 101°F

SHELL THICKNESS: IN. — TOP THICKNESS: IN.

DUST DISPOSAL: ☐ COLLECTOR WITH MATERIAL HOPPER ☒ COLLECTOR WITH BIN VENT & MOUNTING FLANGE; ☐ MECHANICAL SHAKER TYPE ☒ REVERSE JET BLOWDOWN TYPE; OTHER:

INLET CONN. SIZE: RATING: LOCATION:

GAS DISCH. CONN. SIZE: RATING: LOCATION:

DUST DISCH. SIZE: RATING: LOCATION:

DISCH. VALVE: ☐ ROTARY VALVE-REF. PAGE: ☐ SLIDE GATE ☐ VENDOR SUPPLIED ☐ PURCHASER SUPPLIED

PRESSURE DROP (INLET-GAS DISCH.) NORMAL: (PSI)($^{\prime\prime}H_2O$), MAXIMUM: (PSI)($^{\prime\prime}H_2O$)

PRESSURE DROP (DUST SIDE-PLENUM) NORMAL: (PSI)($^{\prime\prime}H_2O$), MAXIMUM: (PSI)($^{\prime\prime}H_2O$)

FILTRATION EFFICIENCY: % — NO. OF BAGS: LENGTH: DIA:

FILTER SURFACE AREA: SQ. FT. — FILTER RATIO: CFM/SQ. FT.

GAS VELOCITY THROUGH COLLECTOR: FPS — DUST HOPPER CAPACITY: CU.FT.

AIR PRESSURE AVAILABLE: PSIG — ELEC. AVAIL: ☐ DC ☒ AC — VOLT/PHASE/HERTZ: 460/ 3 /60

HIGH LEVEL IND. TYPE: ☐ VENDOR SUPPLIES ☐ PURCHASER SUPPLIED

PILOT VALVES MFG: TYPE: ENCLOSURE:

TIMER MFG: TYPE: ENCLOSURE:

OVERALL SIZE LENGTH: WIDTH: HEIGHT:

REMARKS:

UNITED ENGINEERS & CONSTRUCTORS A Raytheon Company Western Operations	EQUIPMENT DATA SHEET ☒ CDR ☐ TITLE I ☐ TITLE II ☐ TITLE III	ITEM NUMBER S-05-203	PAGE 1 OF 1
CUSTOMER & LOCATION: DOE-RL/WHC HANFORD, WA	PROJECT: WRAP FACILITY MODULE 2A	UE&C JOB NO. 6237.006	DATE: 05/05/92
		ACCOUNT NO.	BY: JPJ

REVISIONS (DATE & BY)	A		B		C		D	
	E		F		G		H	

SERVICE	MANUFACTURER	NO. REQ'D	SOURCE OF QUOTE
BFS SILO DUST COLLECTOR		1	

TYPE & MODEL: PULSE-JET BIN VENT

CONDITIONS OF SERVICE

DUST OR MATERIAL HANDLED: BLAST FURNACE SLAG (BFS)

MATERIAL MASS FLOW RATE: 15 LB./HR.

MATERIAL BULK DENSITY: 60 LB./CU.FT.

MATERIAL CHARACTERISTICS: ☒ DRY ☐ ALKALINE ☒ NEUTRAL ☐ SPARKS ☐ DAMP ☐ ACID ☒ ABRASIVE ☐ TOXIC

CONVEYING MEDIUM: TYPE FLUID: AIR; FLOW: 100 ACFM; TEMPERATURE: AMBIENT; RELATIVE HUMIDITY: 15 %

MATERIAL CONCENTRATION: 10 GR./CU.FT.; MINIMUM EXPLOSIVE CONCENTRATION: N/A OZ./CU.FT.

LIMITING O_2 CONCENTRATION: %; INLET PRESSURE: (PSIA)('H,OABS)

TEMPERATURE OF DUST LADEN GAS AT DUST POINTS: AMBIENT

LOCATION: ☐ INDOORS ☐ OUTDOORS; ALTITUDE: 710 AMSL FT.

SERVICE: ☐ CONTINUOUS ☐ INTERMITTENT ☒ DUST RECOVERY ☐ DUST REMOVAL

DUST MATERIAL DISCHARGED TO: T-05-203 SILO

CONSTRUCTION & SPECIFICATIONS

MATERIALS OF CONSTRUCTION: DUST SIDE: ; CLEAN SIDE PLENUM: ; BAG FELT: ; BAG CAGES:

DESIGN PRESSURE: PSIG; DESIGN TEMPERATURE: 9°F TO 101°F

SHELL THICKNESS: IN.; TOP THICKNESS: IN.

DUST DISPOSAL: ☐ COLLECTOR WITH MATERIAL HOPPER ☒ COLLECTOR WITH BIN VENT & MOUNTING FLANGE; ☐ MECHANICAL SHAKER TYPE ☒ REVERSE JET BLOWDOWN TYPE; OTHER:

INLET CONN. SIZE: RATING: LOCATION:

GAS DISCH. CONN. SIZE: RATING: LOCATION:

DUST DISCH. SIZE: RATING: LOCATION:

DISCH. VALVE: ☐ ROTARY VALVE-REF. PAGE: ☐ SLIDE GATE ☐ VENDOR SUPPLIED ☐ PURCHASER SUPPLIED

PRESSURE DROP (INLET-GAS DISCH.) NORMAL: (PSI)('H,O), MAXIMUM: (PSI)('H,O)

PRESSURE DROP (DUST SIDE-PLENUM) NORMAL: (PSI)('H,O), MAXIMUM: (PSI)('H,O)

FILTRATION EFFICIENCY: %; NO. OF BAGS: LENGTH: DIA:

FILTER SURFACE AREA: SQ. FT.; FILTER RATIO: CFM/SQ. FT.

GAS VELOCITY THROUGH COLLECTOR: FPS; DUST HOPPER CAPACITY: CU.FT.

AIR PRESSURE AVAILABLE: PSIG; ELEC. AVAIL: ☐ DC ☒ AC VOLT/PHASE/HERTZ: 460/3/60

HIGH LEVEL IND. TYPE: ☐ VENDOR SUPPLIES ☐ PURCHASER SUPPLIED

PILOT VALVES MFG: TYPE: ENCLOSURE:

TIMER MFG: TYPE: ENCLOSURE:

OVERALL SIZE LENGTH: WIDTH: HEIGHT:

REMARKS:

9413227.0571

UNITED ENGINEERS & CONSTRUCTORS A Raytheon Company Western Operations	EQUIPMENT DATA SHEET ☒ CDR ☐ TITLE I ☐ TITLE II ☐ TITLE III	ITEM NUMBER S-05-205	PAGE 1 OF 1

CUSTOMER & LOCATION	PROJECT	UE&C JOB NO. 6237.006	DATE: 05/01/92
DOE-RL/WHC HANFORD, WA	WRAP FACILITY MODULE 2A	ACCOUNT NO.	BY: JPJ

REVISIONS (DATE & BY)	A		B		C		D	
	E		F		G		H	

SERVICE	MANUFACTURER	NO. REQ'D	SOURCE OF QUOTE
BFS SILO DUST COLLECTOR		1	

TYPE & MODEL: PULSE-JET BIN VENT

CONDITIONS OF SERVICE

DUST OR MATERIAL HANDLED: BLAST FURNACE SLAG (BFS)

MATERIAL MASS FLOW RATE: 15 LB./HR.

MATERIAL BULK DENSITY: 60 LB./CU.FT.

MATERIAL CHARACTERISTICS				
	☒ DRY	☐ ALKALINE	☒ NEUTRAL	☐ SPARKS
	☐ DAMP	☐ ACID	☒ ABRASIVE	☐ TOXIC

CONVEYING MEDIUM		
	TYPE FLUID: AIR	FLOW 100 ACFM
	TEMPERATURE: AMBIENT	RELATIVE HUMIDITY: 15 %

MATERIAL CONCENTRATION: 10 GR./CU.FT. | MINIMUM EXPLOSIVE CONCENTRATION: N/A OZ./CU.FT.

LIMITING O_2 CONCENTRATION: % | INLET PRESSURE: (PSIA)("H,OABS)

TEMPERATURE OF DUST LADEN GAS AT DUST POINTS: AMBIENT

LOCATION	☒ INDOORS	☐ OUTDOORS	ALTITUDE: 710 ABSL FT.
SERVICE	☐ CONTINUOUS	☒ INTERMITTENT	☒ DUST RECOVERY ☐ DUST REMOVAL

DUST MATERIAL DISCHARGED TO: T-05-205 SILO

CONSTRUCTION & SPECIFICATIONS

MATERIALS OF CONSTRUCTION	DUST SIDE:	CLEAN SIDE PLENUM:
	BAG FELT:	BAG CAGES:

DESIGN PRESSURE: PSIG | DESIGN TEMPERATURE: 8°F TO 101°F (DB)

SHELL THICKNESS: IN. | TOP THICKNESS: IN.

DUST DISPOSAL	☐ COLLECTOR WITH MATERIAL HOPPER	☒ COLLECTOR WITH BIN VENT & MOUNTING FLANGE
	☐ MECHANICAL SHAKER TYPE	☒ REVERSE JET BLOWDOWN TYPE
	OTHER:	

INLET CONN.	SIZE:	RATING:	LOCATION:
GAS DISCH. CONN.	SIZE:	RATING:	LOCATION:
DUST DISCH.	SIZE:	RATING:	LOCATION:

DISCH. VALVE	☐ ROTARY VALVE-REF. PAGE:	☐ SLIDE GATE	☐ VENDOR SUPPLIED	☐ PURCHASER SUPPLIED

PRESSURE DROP (INLET-GAS DISCH.) NORMAL: (PSI)("H,O), MAXIMUM: (PSI)("H,O)

PRESSURE DROP (DUST SIDE-PLENUM) NORMAL: (PSI)("H,O), MAXIMUM: (PSI)("H,O)

FILTRATION EFFICIENCY: % | NO. OF BAGS: | LENGTH: | DIA:

FILTER SURFACE AREA: SQ. FT. | FILTER RATIO: CFM/SQ. FT.

GAS VELOCITY THROUGH COLLECTOR: FPS | DUST HOPPER CAPACITY: CU.FT.

AIR PRESSURE AVAILABLE: PSIG | ELEC. AVAIL: ☐ DC ☒ AC | VOLT/PHASE/HERTZ: 480/ 3 /60

HIGH LEVEL IND.	TYPE:	☐ VENDOR SUPPLIES	☐ PURCHASER SUPPLIED
PILOT VALVES	MFG:	TYPE:	ENCLOSURE:
TIMER	MFG:	TYPE:	ENCLOSURE:
OVERALL SIZE	LENGTH:	WIDTH:	HEIGHT:

REMARKS:

UNITED ENGINEERS & CONSTRUCTORS A Raytheon Company Western Operations	EQUIPMENT DATA SHEET ☒ CDR ☐ TITLE I ☐ TITLE II ☐ TITLE III	ITEM NUMBER S-05-206	PAGE 1 OF 1
CUSTOMER & LOCATION: DOE-RL/WHC HANFORD, WA	PROJECT: WRAP FACILITY MODULE 2A	UE&C JOB NO. 6237.006	DATE: 05/05/92
		ACCOUNT NO.	BY: JPJ

REVISIONS (DATE & BY)	A		B		C		D	
	E		F		G		H	

SERVICE	MANUFACTURER	NO. REQ'D	SOURCE OF QUOTE
PFA SILO DUST COLLECTOR		1	

TYPE & MODEL: PULSE-JET BIN VENT

CONDITIONS OF SERVICE

DUST OR MATERIAL HANDLED: PULVERIZED FLY ASH (PFA)			
MATERIAL MASS FLOW RATE: 15 LB./HR.			
MATERIAL BULK DENSITY: 40 LB./CU.FT.			
MATERIAL CHARACTERISTICS	☒ DRY	☐ ALKALINE	☒ NEUTRAL	☐ SPARKS
	☐ DAMP	☐ ACID	☐ ABRASIVE	☐ TOXIC
CONVEYING MEDIUM	TYPE FLUID: AIR	FLOW 100 ACFM		
	TEMPERATURE: AMBIENT	RELATIVE HUMIDITY: 15 %		
MATERIAL CONCENTRATION: 10 GR./CU.FT.		MINIMUM EXPLOSIVE CONCENTRATION: N/A OZ./CU.FT.		
LIMITING O_2 CONCENTRATION: %		INLET PRESSURE: (PSIA)(^{1}H,OABS)		
TEMPERATURE OF DUST LADEN GAS AT DUST POINTS: AMBIENT				
LOCATION	☒ INDOORS	☐ OUTDOORS	ALTITUDE: 710 AMSL FT.	
SERVICE	☐ CONTINUOUS	☒ INTERMITTENT	☒ DUST RECOVERY	☐ DUST REMOVAL
DUST MATERIAL DISCHARGED TO: T-05-206 SILO				

CONSTRUCTION & SPECIFICATIONS

MATERIALS OF CONSTRUCTION	DUST SIDE:		CLEAN SIDE PLENUM:	
	BAG FELT:		BAG CAGES:	
DESIGN PRESSURE: PSIG			DESIGN TEMPERATURE: 9° TO 101°F (DB)	
SHELL THICKNESS: IN.			TOP THICKNESS: IN.	
DUST DISPOSAL	☐ COLLECTOR WITH MATERIAL HOPPER		☒ COLLECTOR WITH BIN VENT & MOUNTING FLANGE	
	☐ MECHANICAL SHAKER TYPE		☒ REVERSE JET BLOWDOWN TYPE	
	OTHER:			
INLET CONN.	SIZE:	RATING:	LOCATION:	
GAS DISCH. CONN.	SIZE:	RATING:	LOCATION:	
DUST DISCH.	SIZE:	RATING:	LOCATION:	
DISCH. VALVE	☐ ROTARY VALVE-REF. PAGE:	☐ SLIDE GATE	☐ VENDOR SUPPLIED	☐ PURCHASER SUPPLIED
PRESSURE DROP (INLET-GAS DISCH.) NORMAL: (PSI)(^{1}H,O), MAXIMUM: (PSI)(^{1}H,O)				
PRESSURE DROP (DUST SIDE-PLENUM) NORMAL: (PSI)(^{1}H,O), MAXIMUM: (PSI)(^{1}H,O)				
FILTRATION EFFICIENCY: %		NO. OF BAGS:	LENGTH:	DIA:
FILTER SURFACE AREA: SQ. FT.		FILTER RATIO: CFM/SQ. FT.		
GAS VELOCITY THROUGH COLLECTOR: FPS		DUST HOPPER CAPACITY: CU.FT.		
AIR PRESSURE AVAILABLE: PSIG		ELEC. AVAIL: ☐ DC ☒ AC	VOLT/PHASE/HERTZ: 480/ 3 /60	
HIGH LEVEL IND.	TYPE:	☐ VENDOR SUPPLIES	☐ PURCHASER SUPPLIED	
PILOT VALVES	MFG:	TYPE:	ENCLOSURE:	
TIMER	MFG:	TYPE:	ENCLOSURE:	
OVERALL SIZE	LENGTH:	WIDTH:	HEIGHT:	

REMARKS:

9413227.0573

UNITED ENGINEERS & CONSTRUCTORS A Raytheon Company Western Operations	EQUIPMENT DATA SHEET ☒ CDR ☐ TITLE I ☐ TITLE II ☐ TITLE III	ITEM NUMBER S-05-209	PAGE 1 OF 1

CUSTOMER & LOCATION	PROJECT	UE&C JOB NO. 6237.006	DATE: 05/06/92
DOE-RL/WHC HANFORD, WA	WRAP FACILITY MODULE 2A	ACCOUNT NO.	BY: JPJ

REVISIONS (DATE & BY)	A		B		C		D	
	E		F		G		H	

SERVICE	MANUFACTURER	NO. REQ'D	SOURCE OF QUOTE
OPC SILO DUST COLLECTION		1	

TYPE & MODEL: PULSE-JET BIN VENT

CONDITIONS OF SERVICE

DUST OR MATERIAL HANDLED: ORDINARY PORTLAND CEMENT (OPC)			
MATERIAL MASS FLOW RATE: 5 LB./HR.			
MATERIAL BULK DENSITY: 80 LB./CU.FT.			
MATERIAL CHARACTERISTICS	☒ DRY	☒ ALKALINE	☐ NEUTRAL	☐ SPARKS
	☐ DAMP	☐ ACID	☒ ABRASIVE	☐ TOXIC
CONVEYING MEDIUM	TYPE FLUID: AIR	FLOW 100 ACFM		
	TEMPERATURE: AMBIENT	RELATIVE HUMIDITY: 15 %		
MATERIAL CONCENTRATION: 10 GR./CU.FT.		MINIMUM EXPLOSIVE CONCENTRATION: N/A OZ./CU.FT.		
LIMITING O_2 CONCENTRATION: %		INLET PRESSURE: (PSIA)("H,OABS)		
TEMPERATURE OF DUST LADEN GAS AT DUST POINTS: AMBIENT				
LOCATION	☒ INDOORS	☐ OUTDOORS	ALTITUDE: 710 ABOVE FT.	
SERVICE	☐ CONTINUOUS	☒ INTERMITTENT	☒ DUST RECOVERY	☐ DUST REMOVAL
DUST MATERIAL DISCHARGED TO: T-05-209 SILO				

CONSTRUCTION & SPECIFICATIONS

MATERIALS OF CONSTRUCTION	DUST SIDE:		CLEAN SIDE PLENUM:	
	BAG FELT:		BAG CAGES:	
DESIGN PRESSURE: PSIG			DESIGN TEMPERATURE: 9°F TO 101°F (DB)	
SHELL THICKNESS: IN.			TOP THICKNESS: IN.	
DUST DISPOSAL	☐ COLLECTOR WITH MATERIAL HOPPER		☒ COLLECTOR WITH BIN VENT & MOUNTING FLANGE	
	☐ MECHANICAL SHAKER TYPE		☒ REVERSE JET BLOWDOWN TYPE	
	OTHER:			
INLET CONN.	SIZE:	RATING:	LOCATION:	
GAS DISCH. CONN.	SIZE:	RATING:	LOCATION:	
DUST DISCH.	SIZE:	RATING:	LOCATION:	
DISCH. VALVE	☐ ROTARY VALVE-REF. PAGE:	☐ SLIDE GATE	☐ VENDOR SUPPLIED	☐ PURCHASER SUPPLIED
PRESSURE DROP (INLET-GAS DISCH.) NORMAL: (PSI)("H,O), MAXIMUM: (PSI)("H,O)				
PRESSURE DROP (DUST SIDE-PLENUM) NORMAL: (PSI)("H,O), MAXIMUM: (PSI)("H,O)				
FILTRATION EFFICIENCY: %			NO. OF BAGS: LENGTH: DIA:	
FILTER SURFACE AREA: SQ. FT.			FILTER RATIO: CFM/SQ. FT.	
GAS VELOCITY THROUGH COLLECTOR: FPS			DUST HOPPER CAPACITY: CU.FT.	
AIR PRESSURE AVAILABLE: PSIG			ELEC. AVAIL: ☐ DC ☒ AC VOLT/PHASE/HERTZ: 480/ 3 /60	
HIGH LEVEL IND.	TYPE:	☐ VENDOR SUPPLIES	☐ PURCHASER SUPPLIED	
PILOT VALVES	MFG:	TYPE:	ENCLOSURE:	
TIMER	MFG:	TYPE:	ENCLOSURE:	
OVERALL SIZE	LENGTH:	WIDTH:	HEIGHT:	

REMARKS:

UNITED ENGINEERS & CONSTRUCTORS A Raytheon Company Western Operations	EQUIPMENT DATA SHEET ☒ CDR ☐ TITLE I ☐ TITLE II ☐ TITLE III	ITEM NUMBER S-05-210	PAGE 1 OF 1
CUSTOMER & LOCATION: DOE-RL/WHC HANFORD, WA	PROJECT: WRAP FACILITY MODULE 2A	UE&C JOB NO. 6237.006	DATE: 05/05/92
		ACCOUNT NO.	BY: JPJ

REVISIONS (DATE & BY)	A		B		C		D	
	E		F		G		H	

SERVICE	MANUFACTURER	NO. REQ'D	SOURCE OF QUOTE
PFA SILO DUST COLLECTOR		1	

TYPE & MODEL: PULSE-JET BIN VENT

CONDITIONS OF SERVICE

DUST OR MATERIAL HANDLED: PULVERIZED FLY ASH (PFA)

MATERIAL MASS FLOW RATE: 15 LB./HR.

MATERIAL BULK DENSITY: 40 LB./CU.FT.

MATERIAL CHARACTERISTICS: ☒ DRY ☐ ALKALINE ☒ NEUTRAL ☐ SPARKS ☐ DAMP ☐ ACID ☐ ABRASIVE ☐ TOXIC

CONVEYING MEDIUM: TYPE FLUID: AIR; FLOW: 100 ACFM; TEMPERATURE: AMBIENT; RELATIVE HUMIDITY: 15 %

MATERIAL CONCENTRATION: 10 GR./CU.FT.; MINIMUM EXPLOSIVE CONCENTRATION: N/A OZ./CU.FT.

LIMITING O_2 CONCENTRATION: %; INLET PRESSURE: (PSIA)(IN H_2OABS)

TEMPERATURE OF DUST LADEN GAS AT DUST POINTS: AMBIENT

LOCATION: ☒ INDOORS ☐ OUTDOORS; ALTITUDE: 710 AMSL FT.

SERVICE: ☐ CONTINUOUS ☒ INTERMITTENT ☒ DUST RECOVERY ☐ DUST REMOVAL

DUST MATERIAL DISCHARGED TO: T-05-206 SILO

CONSTRUCTION & SPECIFICATIONS

MATERIALS OF CONSTRUCTION: DUST SIDE: ; CLEAN SIDE PLENUM: ; BAG FELT: ; BAG CAGES:

DESIGN PRESSURE: PSIG; DESIGN TEMPERATURE: 9°F TO 101°F

SHELL THICKNESS: IN.; TOP THICKNESS: IN.

DUST DISPOSAL: ☐ COLLECTOR WITH MATERIAL HOPPER ☒ COLLECTOR WITH BIN VENT & MOUNTING FLANGE; ☐ MECHANICAL SHAKER TYPE ☒ REVERSE JET BLOWDOWN TYPE; OTHER:

INLET CONN. SIZE: RATING: LOCATION:

GAS DISCH. CONN. SIZE: RATING: LOCATION:

DUST DISCH. SIZE: RATING: LOCATION:

DISCH. VALVE: ☐ ROTARY VALVE-REF. PAGE: ☐ SLIDE GATE ☐ VENDOR SUPPLIED ☐ PURCHASER SUPPLIED

PRESSURE DROP (INLET-GAS DISCH.) NORMAL: (PSI)(IN H_2O), MAXIMUM: (PSI)(IN H_2O)

PRESSURE DROP (DUST SIDE-PLENUM) NORMAL: (PSI)(IN H_2O), MAXIMUM: (PSI)(IN H_2O)

FILTRATION EFFICIENCY: %; NO. OF BAGS: LENGTH: DIA:

FILTER SURFACE AREA: SQ. FT.; FILTER RATIO: CFM/SQ. FT.

GAS VELOCITY THROUGH COLLECTOR: FPS; DUST HOPPER CAPACITY: CU.FT.

AIR PRESSURE AVAILABLE: PSIG; ELEC. AVAIL: ☐ DC ☒ AC VOLT/PHASE/HERTZ: 460/ 3 /60

HIGH LEVEL IND. TYPE: ☐ VENDOR SUPPLIES ☐ PURCHASER SUPPLIED

PILOT VALVES MFG: TYPE: ENCLOSURE:

TIMER MFG: TYPE: ENCLOSURE:

OVERALL SIZE LENGTH: WIDTH: HEIGHT:

REMARKS:

9413227.0575

UNITED ENGINEERS & CONSTRUCTORS A Raytheon Company Western Operations	EQUIPMENT DATA SHEET ☒ CDR ☐ TITLE I ☐ TITLE II ☐ TITLE III	ITEM NUMBER Y-05-201	PAGE 1 OF 1

CUSTOMER & LOCATION	PROJECT	UE&C JOB NO. 6237.006	DATE: 04/20/92
DOE-RL/WHC HANFORD, WA	WRAP FACILITY MODULE 2A	ACCOUNT NO.	BY: JPJ

REVISIONS (DATE & BY)	A		B		C		D	
	E		F		G		H	

SERVICE	MANUFACTURER	NO. REQ'D	SOURCE OF QUOTE
OPC SILO ROTARY FEEDER		1	

CONDITIONS OF SERVICE

FLOW MEDIA: ORDINARY PORTLAND CEMENT (OPC)		BULK DENSITY: 80 LBS./CU. FT.
FLOW RATE: 25 CU FT/HR	2,000 LBS./HR.	MOIST CONTENT: %
TEMPERATURE: 10-100°F	INLET PRESSURE: 7-8 PSIA	DISCHARGE PRESSURE: PSIA
PARTICLE SIZE	PELLETS:	GRANULAR:
	POWDER: < 100 MESH	OTHER:
FLOW CHARACTERISTICS	RESISTANCE TO IMPACT:	CORROSIVE:
	TENDENCY TO PACK:	ABRASIVE: MILDLY
	OTHER: FREE FLOWING	FEEDER SIZE: 6" DIA
FEEDER APPLICATION	☐ MANUAL	☒ AUTOMATIC ☐ OTHER

SPECIFICATIONS

MATERIALS OF	BODY:	ENDPLATES:
	ROTOR: REDUCED CAPACITY-CLOSED END	SHAFT:
	PACKING GLAND:	REPLACEABLE TIP: AR STEEL
SHAFT SEALS	☒ PACKING TYPE & MATERIAL: MOLY IMPREGNATED URETHANE U-CUP	
	☐ MECHANICAL ROTARY	AIR OR GAS PURGE CONN.:
DESIGN PRESS: 14.9 PSIG		DESIGN TEMPERATURE: 101°F
DESIGN FILL EFFICIENCY: %		ROTOR DISPLACEMENT: CU. FT./REV.
ROTOR SPEED:	DESIGN RPM:	MAXIMUM RPM:
CLEARANCES-ROTOR TIP TO BODY, IN.	AT AMBIENT TEMP.:	OPER. TEMP.: AT DESIGN TEMP.:
BEARINGS	☒ BALL ☐ SLEEVE ☐ OIL ☐ GREASE ☐ PRE-LUBED & SEALED	
TYPE DRIVE	☐ DIRECT CONN. ☒ CHAIN ☐ OTHER	
	OUTPUT TORQUE: SPEED RATIO: DRIVE SPROCKET DIA:	
	DRIVEN SPROCKET DIA:	DRIVE GUARD SUPPLIED BY: VALVE VENDOR
SPEED CONTROL	☐ MANUAL ☐ AUTOMATIC ☐ BY VENDOR ☐ BY OTHERS	

MOTOR DRIVER

HP:	RPM:	FRAME:	VOLTS/PHASE/CYCLE: 460/3/60
MFR:		TYPE: SQUIRREL CAGE INDUCTION	NEMA DESIGN:
ENCLOSURE:		RATED AMBIENT TEMP.: 40°C	INSUL. CLASS:
ELEVATION: 710 FT.		FULL LOAD AMPS:	SPACE HEATERS:

GENERAL INFORMATION

APPROX. WT.:	ENTIRE UNIT:	ROTARY VALVE ONLY:

REMARKS:

9413227.0576

UNITED ENGINEERS & CONSTRUCTORS A Raytheon Company Western Operations	EQUIPMENT DATA SHEET ☒ CDR ☐ TITLE I ☐ TITLE II ☐ TITLE III	ITEM NUMBER Y-05-202	PAGE 1 OF 1
CUSTOMER & LOCATION DOE-RL/WHC HANFORD, WA	PROJECT WRAP FACILITY MODULE 2A	UE&C JOB NO. 6237.006 / ACCOUNT NO.	DATE: 04/20/92 / BY: JPJ

REVISIONS (DATE & BY)	A		B		C		D	
	E		F		G		H	

SERVICE	MANUFACTURER	NO. REQ'D	SOURCE OF QUOTE
OPC HOPPER ROTARY FEEDER		1	

CONDITIONS OF SERVICE

FLOW MEDIA: ORDINARY PORTLAND CEMENT (OPC)		BULK DENSITY: 80 LBS./CU. FT.
FLOW RATE: 60 CU FT/HR	4,800 LBS./HR.	MOIST CONTENT: %
TEMPERATURE: 10-100°F	INLET PRESSURE: 7-8 PSIA	DISCHARGE PRESSURE: PSIA
PARTICLE SIZE	PELLETS:	GRANULAR:
	POWDER: < 100 MESH	OTHER:
FLOW CHARACTERISTICS	RESISTANCE TO IMPACT:	CORROSIVE:
	TENDENCY TO PACK:	ABRASIVE: HIGHLY
	OTHER: FREE FLOWING	FEEDER SIZE: 6" DIA
FEEDER APPLICATION	☐ MANUAL	☒ AUTOMATIC ☐ OTHER

SPECIFICATIONS

MATERIALS OF	BODY:	ENDPLATES:
	ROTOR: REDUSED CAPACITY-CLOSED END	SHAFT:
	PACKING GLAND:	REPLACEABLE TIP: AR STEEL
SHAFT SEALS	☒ PACKING TYPE & MATERIAL: MOLY IMPREGNATED URETHANE U-CUP	
	☐ MECHANICAL ROTARY	AIR OR GAS PURGE CONN.:
DESIGN PRESS: 14.9 PSIG		DESIGN TEMPERATURE: 101°F
DESIGN FILL EFFICIENCY: %		ROTOR DISPLACEMENT: CU. FT./REV.
ROTOR SPEED:	DESIGN RPM:	MAXIMUM RPM:
CLEARANCES-ROTOR TIP TO BODY, IN.	AT AMBIENT TEMP.:	AT OPER. TEMP.: AT DESIGN TEMP.:
BEARINGS	☒ BALL ☐ SLEEVE ☐ OIL ☐ GREASE ☐ PRE-LUBED & SEALED	
TYPE DRIVE	☐ DIRECT CONN. ☒ CHAIN ☐ OTHER	
	OUTPUT TORQUE: SPEED RATIO: DRIVE SPROCKET DIA:	
	DRIVEN SPROCKET DIA:	DRIVE GUARD SUPPLIED BY: VALVE VENDOR
SPEED CONTROL	☐ MANUAL ☐ AUTOMATIC ☐ BY VENDOR ☐ BY OTHERS	

MOTOR DRIVER

HP:	RPM:	FRAME:	VOLTS/PHASE/CYCLE: 460/3/60
MFR:		TYPE: SQUIRREL CAGE INDUCTION	NEMA DESIGN:
ENCLOSURE:		RATED AMBIENT TEMP.: 40°C	INSUL. CLASS:
ELEVATION: 710 FT.		FULL LOAD AMPS:	SPACE HEATERS:

GENERAL INFORMATION

APPROX. WT.:	ENTIRE UNIT:	ROTARY VALVE ONLY:

REMARKS:

9413227.0577

UNITED ENGINEERS & CONSTRUCTORS A Raytheon Company Western Operations	EQUIPMENT DATA SHEET ☒ CDR ☐ TITLE I ☐ TITLE II ☐ TITLE III	ITEM NUMBER Y-05-203	PAGE 1 OF 1

CUSTOMER & LOCATION	PROJECT	UE&C JOB NO. 6237.006	DATE: 04/20/92
DOE-RL/WHC HANFORD, WA	WRAP FACILITY MODULE 2A	ACCOUNT NO.	BY: JPJ

REVISIONS (DATE & BY)	A		B		C		D	
	E		F		G		H	

SERVICE	MANUFACTURER	NO. REQ'D	SOURCE OF QUOTE
BFS SILO ROTARY FEEDER		1	

CONDITIONS OF SERVICE

FLOW MEDIA: BLAST FURNACE SLAG (BFS)		BULK DENSITY: 60 LBS./CU. FT.
FLOW RATE: 60 CU FT/HR	3,600 LBS./HR.	MOIST CONTENT: %
TEMPERATURE 10-100 °F	INLET PRESSURE: 7-8 PSIA	DISCHARGE PRESSURE: PSIA
PARTICLE SIZE	PELLETS:	GRANULAR:
	POWDER: FINE 100 MESH + 1/8"	OTHER:
FLOW CHARACTERISTICS	RESISTANCE TO IMPACT:	CORROSIVE:
	TENDENCY TO PACK:	ABRASIVE: VERY
	OTHER: FREE FLOWING	FEEDER SIZE: 6" DIA
FEEDER APPLICATION	☐ MANUAL	☒ AUTOMATIC ☐ OTHER

SPECIFICATIONS

MATERIALS OF	BODY:	ENDPLATES:
	ROTOR: REDUCED CAPACITY-CLOSED END	SHAFT:
	PACKING GLAND:	REPLACEABLE TIP: AR STEEL
SHAFT SEALS	☒ PACKING TYPE & MATERIAL: MOLY INPREGNATED URETHANE U-CUP	
	☐ MECHANICAL ROTARY	AIR OR GAS PURGE CONN.:
DESIGN PRESS: 14.9 PSIG		DESIGN TEMPERATURE: 101°F
DESIGN FILL EFFICIENCY: %		ROTOR DISPLACEMENT: CU. FT./REV.
ROTOR SPEED:	DESIGN RPM:	MAXIMUM RPM:
CLEARANCES-ROTOR TIP TO BODY, IN.	AT AMBIENT TEMP.:	AT OPER. TEMP.: AT DESIGN TEMP.:
BEARINGS	☒ BALL ☐ SLEEVE ☐ OIL ☐ GREASE ☐ PRE-LUBED & SEALED	
TYPE DRIVE	☐ DIRECT CONN. X CHAIN ☐ OTHER	
	OUTPUT TORQUE: SPEED RATIO: DRIVE SPROCKET DIA:	
	DRIVEN SPROCKET DIA:	DRIVE GUARD SUPPLIED BY: VALVE VENDOR
SPEED CONTROL	☐ MANUAL ☐ AUTOMATIC ☐ BY VENDOR ☐ BY OTHERS	

MOTOR DRIVER

HP:	RPM:	FRAME:	VOLTS/PHASE/CYCLE: 460/3-60
MFR:		TYPE: SQUIRREL CAGE INDUCTION	NEMA DESIGN:
ENCLOSURE:		RATED AMBIENT TEMP.: 40°C	INSUL. CLASS:
ELEVATION: 710 FT.		FULL LOAD AMPS:	SPACE HEATERS:

GENERAL INFORMATION

APPROX. WT.:	ENTIRE UNIT:	ROTARY VALVE ONLY:

REMARKS:

9413227.0578

UNITED ENGINEERS & CONSTRUCTORS A Raytheon Company Western Operations	EQUIPMENT DATA SHEET ☒ CDR ☐ TITLE I ☐ TITLE II ☐ TITLE III	ITEM NUMBER Y-05-204	PAGE 1 OF 1
CUSTOMER & LOCATION DOE-RL/WHC HANFORD, WA	PROJECT WRAP FACILITY MODULE 2A	UE&C JOB NO. 6237.006	DATE: 04/20/92
		ACCOUNT NO.	BY: JPJ

REVISIONS (DATE & BY)	A		B		C		D	
	E		F		G		H	

SERVICE	MANUFACTURER	NO. REQ'D	SOURCE OF QUOTE
BFS HOPPER ROTARY FEEDER		1	

CONDITIONS OF SERVICE

FLOW MEDIA: BLAST FURNACE SLAG (BFS)		BULK DENSITY: 60 LBS./CU. FT.
FLOW RATE: 60 CU FT/HR	3,600 LBS./HR.	MOIST CONTENT: %
TEMPERATURE: 10-100°F	INLET PRESSURE: 7-8 PSIA	DISCHARGE PRESSURE: PSIA
PARTICLE SIZE	PELLETS:	GRANULAR:
	POWDER: 100 MESH → 1/8"	OTHER:
FLOW CHARACTERISTICS	RESISTANCE TO IMPACT:	CORROSIVE:
	TENDENCY TO PACK:	ABRASIVE: VERY ABRASIVE
	OTHER: FREE FLOWING	FEEDER SIZE: 6"
FEEDER APPLICATION	☐ MANUAL	☐ AUTOMATIC ☐ OTHER

SPECIFICATIONS

MATERIALS OF	BODY:	ENDPLATES:
	ROTOR: REDUCED CAPACITY-CLOSED END	SHAFT:
	PACKING GLAND:	REPLACEABLE TIP: AR STEEL
SHAFT SEALS	☒ PACKING TYPE & MATERIAL: MOLY IMPREGNATED URETHANE U-CUP	
	☐ MECHANICAL ROTARY	AIR OR GAS PURGE CONN.:
DESIGN PRESS: 14.9 PSIG		DESIGN TEMPERATURE: 101°F
DESIGN FILL EFFICIENCY: %		ROTOR DISPLACEMENT: CU. FT./REV.
ROTOR SPEED:	DESIGN RPM:	MAXIMUM RPM:
CLEARANCES-ROTOR TIP TO BODY, IN.	AT AMBIENT TEMP.:	AT OPER. TEMP.: AT DESIGN TEMP.:
BEARINGS	☒ BALL ☐ SLEEVE ☐ OIL ☐ GREASE ☐ PRE-LUBED & SEALED	
TYPE DRIVE	☐ DIRECT CONN. ☒ CHAIN ☐ OTHER	
	OUTPUT TORQUE: SPEED RATIO:	DRIVE SPROCKET DIA:
	DRIVEN SPROCKET DIA:	DRIVE GUARD SUPPLIED BY: VALVE VENDOR
SPEED CONTROL	☐ MANUAL ☐ AUTOMATIC	☐ BY VENDOR ☐ BY OTHERS

MOTOR DRIVER

HP:	RPM:	FRAME:	VOLTS/PHASE/CYCLE: 460/3/60
MFR:		TYPE: SQUIRREL CAGE INDUCTION	NEMA DESIGN:
ENCLOSURE:		RATED AMBIENT TEMP.: 40°C	INSUL. CLASS:
ELEVATION: 710 FT.		FULL LOAD AMPS:	SPACE HEATERS:

GENERAL INFORMATION

APPROX. WT.:	ENTIRE UNIT:	ROTARY VALVE ONLY:

REMARKS:

9113227.0579

UNITED ENGINEERS & CONSTRUCTORS A Raytheon Company Western Operations	EQUIPMENT DATA SHEET ☒ CDR ☐ TITLE I ☐ TITLE II ☐ TITLE III	ITEM NUMBER Y-05-205	PAGE 1 OF 1
CUSTOMER & LOCATION DOE-RL/WHC HANFORD, WA	PROJECT WRAP FACILITY MODULE 2A	UE&C JOB NO. 6237.006 / ACCOUNT NO. 1	DATE: 04/20/92 / BY: JPJ

REVISIONS (DATE & BY)	A		B		C		D	
	E		F		G		H	

SERVICE	MANUFACTURER	NO. REQ'D	SOURCE OF QUOTE
BFS ROTARY FEED		1	

CONDITIONS OF SERVICE

FLOW MEDIA: BLAST FURNACE SLAG (BFS)		BULK DENSITY: 60 LBS./CU. FT.
FLOW RATE: 60 CU FT/HR	3,600 LBS./HR.	MOIST CONTENT: %
TEMPERATURE: 10-100°F	INLET PRESSURE: 7-8 PSIA	DISCHARGE PRESSURE: PSIA
PARTICLE SIZE	PELLETS:	GRANULAR:
	POWDER: 100 MESH → 1/8"	OTHER:
FLOW CHARACTERISTICS	RESISTANCE TO IMPACT:	CORROSIVE:
	TENDENCY TO PACK:	ABRASIVE: VERY
	OTHER: FREE FLOWING	FEEDER SIZE: 6" DIA
FEEDER APPLICATION	☐ MANUAL	☐ AUTOMATIC ☐ OTHER

SPECIFICATIONS

MATERIALS OF	BODY:	ENDPLATES:
	ROTOR: REDUCED CAPACITY-CLOSED END	SHAFT:
	PACKING GLAND:	REPLACEABLE TIP: AR STEEL
SHAFT SEALS	☒ PACKING TYPE & MATERIAL: MOLY IMPREGNATED URETHANE U-CUP	
	☐ MECHANICAL ROTARY	AIR OR GAS PURGE CONN.:
DESIGN PRESS: 14.9 PSIG		DESIGN TEMPERATURE: °F
DESIGN FILL EFFICIENCY: %		ROTOR DISPLACEMENT: CU. FT./REV.
ROTOR SPEED:	DESIGN RPM:	MAXIMUM RPM:
CLEARANCES-ROTOR TIP TO BODY, IN.	AT AMBIENT TEMP.:	AT OPER. TEMP.: AT DESIGN TEMP.:
BEARINGS	☒ BALL ☐ SLEEVE ☐ OIL ☐ GREASE ☐ PRE-LUBED & SEALED	
TYPE DRIVE	☐ DIRECT CONN. ☒ CHAIN ☐ OTHER	
	OUTPUT TORQUE: SPEED RATIO: DRIVE SPROCKET DIA:	
	DRIVEN SPROCKET DIA:	DRIVE GUARD SUPPLIED BY: VALVE VENDOR
SPEED CONTROL	☐ MANUAL ☐ AUTOMATIC ☐ BY VENDOR ☐ BY OTHERS	

MOTOR DRIVER

HP:	RPM:	FRAME:	VOLTS/PHASE/CYCLE: 460/3/60
MFR:		TYPE: SQUIRREL CAGE INDUCTION	NEMA DESIGN:
ENCLOSURE:		RATED AMBIENT TEMP.: 40°C	INSUL. CLASS:
ELEVATION: 710 FT.		FULL LOAD AMPS:	SPACE HEATERS:

GENERAL INFORMATION

APPROX. WT.:	ENTIRE UNIT:	ROTARY VALVE ONLY:

REMARKS:

9413227.0580

UNITED ENGINEERS & CONSTRUCTORS A Raytheon Company Western Operations	EQUIPMENT DATA SHEET ☒ CDR ☐ TITLE I ☐ TITLE II ☐ TITLE III	ITEM NUMBER Y-05-206	PAGE 1 OF 1
CUSTOMER & LOCATION DOE-RL/WHC HANFORD, WA	PROJECT WRAP FACILITY MODULE 2A	UE&C JOB NO. 6237.006 / ACCOUNT NO.	DATE: 04/20/92 / BY: JPJ

REVISIONS (DATE & BY)	A		B		C		D	
	E		F		G		H	

SERVICE	MANUFACTURER	NO. REQ'D	SOURCE OF QUOTE
PFA ROTARY FEEDER		1	

CONDITIONS OF SERVICE

FLOW MEDIA: PULVERIZED FLY ASH		BULK DENSITY: 40 LBS./CU. FT.
FLOW RATE: 90 CU FT/HR	3,600 LBS./HR.	MOIST CONTENT: %
TEMPERATURE: 10-100°F	INLET PRESSURE: PSIA	DISCHARGE PRESSURE: 7-8 PSIA
PARTICLE SIZE	PELLETS:	GRANULAR:
	POWDER: < 100 MESH	OTHER:
FLOW CHARACTERISTICS	RESISTANCE TO IMPACT:	CORROSIVE:
	TENDENCY TO PACK:	ABRASIVE: VERY
	OTHER: FREE FLOWING	FEEDER SIZE: 6" DIA
FEEDER APPLICATION	☐ MANUAL	☐ AUTOMATIC ☐ OTHER

SPECIFICATIONS

MATERIALS OF	BODY:	ENDPLATES:
	ROTOR: REDUCED CAPACITY-CLOSED END	SHAFT:
	PACKING GLAND:	REPLACEABLE TIP: AR STEEL
SHAFT SEALS	☒ PACKING TYPE & MATERIAL: MOLY IMPREGNATED URETHANE U-CUP	
	☐ MECHANICAL ROTARY	AIR OR GAS PURGE CONN.:
DESIGN PRESS: 14.9 PSIG		DESIGN TEMPERATURE: 101°F
DESIGN FILL EFFICIENCY: %		ROTOR DISPLACEMENT: CU. FT./REV.
ROTOR SPEED:	DESIGN RPM:	MAXIMUM RPM:
CLEARANCES-ROTOR TIP TO BODY, IN.	AT AMBIENT TEMP.:	AT OPER. TEMP.: AT DESIGN TEMP.:
BEARINGS	☒ BALL ☐ SLEEVE ☐ OIL ☐ GREASE ☐ PRE-LUBED & SEALED	
TYPE DRIVE	☐ DIRECT CONN. ☒ CHAIN ☐ OTHER	
	OUTPUT TORQUE: SPEED RATIO: DRIVE SPROCKET DIA:	
	DRIVEN SPROCKET DIA:	DRIVE GUARD SUPPLIED BY: VALVE VENDOR
SPEED CONTROL	☐ MANUAL ☐ AUTOMATIC ☐ BY VENDOR ☐ BY OTHERS	

MOTOR DRIVER

HP:	RPM:	FRAME:	VOLTS/PHASE/CYCLE: 460/3/60
MFR:		TYPE: SQUIRREL CAGE INDUCTION	NEMA DESIGN:
ENCLOSURE:		RATED AMBIENT TEMP.: 40°C	INSUL. CLASS:
ELEVATION: 710 FT.		FULL LOAD AMPS:	SPACE HEATERS:

GENERAL INFORMATION

APPROX. WT.:	ENTIRE UNIT:	ROTARY VALVE ONLY:

REMARKS:

9413227.0581

UNITED ENGINEERS & CONSTRUCTORS A Raytheon Company Western Operations	EQUIPMENT DATA SHEET ☒ CDR ☐ TITLE I ☐ TITLE II ☐ TITLE III	ITEM NUMBER Y-05-207	PAGE 1 OF 1

CUSTOMER & LOCATION	PROJECT	UE&C JOB NO. 6237.006	DATE: 04/20/92
DOE-RL/WHC HANFORD, WA	WRAP FACILITY MODULE 2A	ACCOUNT NO. 1	BY: JPJ

REVISIONS (DATE & BY)	A		B		C		D	
	E		F		G		H	

SERVICE	MANUFACTURER	NO. REQ'D	SOURCE OF QUOTE
BLENDED POWDER ROTARY FEEDER		1	

CONDITIONS OF SERVICE

FLOW MEDIA: BLENDED POWDER		BULK DENSITY: 65 LBS./CU. FT.
FLOW RATE: 60 CU FT/HR	3,900 LBS./HR.	MOIST CONTENT: %
TEMPERATURE: 10-100°F	INLET PRESSURE: 7-8 PSIA	DISCHARGE PRESSURE: PSIA
PARTICLE SIZE	PELLETS:	GRANULAR:
	POWDER: MIXED-MINUS 1/8" X 100 MESH	OTHER:
FLOW CHARACTERISTICS	RESISTANCE TO IMPACT:	CORROSIVE:
	TENDENCY TO PACK:	ABRASIVE: VERY
	OTHER: FREE FLOWING	FEEDER SIZE: 6" DIA
FEEDER APPLICATION	☐ MANUAL	☐ AUTOMATIC ☐ OTHER

SPECIFICATIONS

MATERIALS OF	BODY:	ENDPLATES:
	ROTOR: REDUCED CAPACITY-CLOSED END	SHAFT:
	PACKING GLAND:	REPLACEABLE TIP: AR STEEL
SHAFT SEALS	☒ PACKING TYPE & MATERIAL: MOLY IMPREGNATED URETHANE U-CUP	
	☐ MECHANICAL ROTARY	AIR OR GAS PURGE CONN.:
DESIGN PRESS: 14.9 PSIG		DESIGN TEMPERATURE: 101°F
DESIGN FILL EFFICIENCY: %		ROTOR DISPLACEMENT: CU. FT./REV.
ROTOR SPEED:	DESIGN RPM:	MAXIMUM RPM:
CLEARANCES-ROTOR TIP TO BODY, IN.	AT AMBIENT TEMP.:	AT OPER. TEMP.: AT DESIGN TEMP.:
BEARINGS	☒ BALL ☐ SLEEVE ☐ OIL ☐ GREASE ☐ PRE-LUBED & SEALED	
TYPE DRIVE	☐ DIRECT CONN. ☒ CHAIN ☐ OTHER	
	OUTPUT TORQUE: SPEED RATIO: DRIVE SPROCKET DIA:	
	DRIVEN SPROCKET DIA:	DRIVE GUARD SUPPLIED BY: VALVE VENDOR
SPEED CONTROL	☐ MANUAL ☐ AUTOMATIC ☐ BY VENDOR ☐ BY OTHERS	

MOTOR DRIVER

HP:	RPM:	FRAME:	VOLTS/PHASE/CYCLE: 460/3/60
MFR:		TYPE: SQUIRREL CAGE INDUCTION	NEMA DESIGN:
ENCLOSURE:		RATED AMBIENT TEMP.: 40°C	INSUL. CLASS:
ELEVATION: 710 FT.		FULL LOAD AMPS:	SPACE HEATERS:

GENERAL INFORMATION

APPROX. WT.:	ENTIRE UNIT:	ROTARY VALVE ONLY:

REMARKS:

9413227.0582

ENGINEERS / CONSTRUCTORS Bechtel Company Fluor Operations	EQUIPMENT DATA SHEET ☒ CDR ☐ TITLE I ☐ TITLE II ☐ TITLE III	ITEM NUMBER Y-05-206	PAGE 1 OF 1
CUSTOMER & LOCATION DOE-RL/WHC HANFORD, WA	PROJECT WRAP FACILITY MODULE 2A	UE&C JOB NO. 6237.006 / ACCOUNT NO. 1	DATE: 04/20/92 / BY: JPJ

REVISIONS (DATE & BY)	A		B		C		D	
	E		F		G		H	

SERVICE	MANUFACTURER	NO. REQ'D	SOURCE OF QUOTE
BLENDED POWDER ROTARY FEEDER		1	

CONDITIONS OF SERVICE

FLOW MEDIA: BLENDED POWDER		BULK DENSITY: 65 LBS./CU. FT.
FLOW RATE: 60 CU FT/HR	3,900 LBS./HR.	MOIST CONTENT: %
TEMPERATURE: 10-100°F	INLET PRESSURE: 7-8 PSIA	DISCHARGE PRESSURE: PSIA
PARTICLE SIZE	PELLETS:	GRANULAR:
	POWDER: MIXED-MINUS 1/8" X 100 MESH	OTHER:
FLOW CHARACTERISTICS	RESISTANCE TO IMPACT:	CORROSIVE:
	TENDENCY TO PACK:	ABRASIVE: VERY
	OTHER: FREE FLOWING	FEEDER SIZE: 6" DIA
FEEDER APPLICATION	☐ MANUAL	☐ AUTOMATIC ☐ OTHER

SPECIFICATIONS

MATERIALS OF	BODY:	ENDPLATES:
	ROTOR: REDUCED CAPACITY-CLOSED END	SHAFT:
	PACKING GLAND:	REPLACEABLE TIP: AR STEEL
SHAFT SEALS	☒ PACKING TYPE & MATERIAL: MOLY IMPREGNATED URETHANE U-CUP	
	☐ MECHANICAL ROTARY	AIR OR GAS PURGE CONN.:
DESIGN PRESS: 14.9 PSIG		DESIGN TEMPERATURE: 101°F
DESIGN FILL EFFICIENCY: %		ROTOR DISPLACEMENT: CU. FT./REV.
ROTOR SPEED:	DESIGN RPM:	MAXIMUM RPM:
CLEARANCES-ROTOR TIP TO BODY, IN.	AT AMBIENT TEMP.:	AT OPER. TEMP.: / AT DESIGN TEMP.:
BEARINGS	☒ BALL ☐ SLEEVE ☐ OIL ☐ GREASE ☐ PRE-LUBED & SEALED	
DRIVE	☐ DIRECT CONN. ☒ CHAIN ☐ OTHER	
	OUTPUT TORQUE: SPEED RATIO: DRIVE SPROCKET DIA:	
	DRIVEN SPROCKET DIA:	DRIVE GUARD SUPPLIED BY: VALVE VENDOR
SPEED CONTROL	☐ MANUAL ☐ AUTOMATIC ☐ BY VENDOR ☐ BY OTHERS	

MOTOR DRIVER

HP:	RPM:	FRAME:	VOLTS/PHASE/CYCLE: 460/3/60
MFR:		TYPE: SQUIRREL CAGE INDUCTION	NEMA DESIGN:
ENCLOSURE:		RATED AMBIENT TEMP.: 40°C	INSUL. CLASS:
ELEVATION: 710 FT.		FULL LOAD AMPS:	SPACE HEATERS:

GENERAL INFORMATION

APPROX. WT.:	ENTIRE UNIT:	ROTARY VALVE ONLY:

REMARKS:

UNITED ENGINEERS & CONSTRUCTORS A Raytheon Company Western Operations	EQUIPMENT DATA SHEET ☒ CDR ☐ TITLE I ☐ TITLE II ☐ TITLE III	ITEM NUMBER Y-06-209	PAGE 1 OF 1
CUSTOMER & LOCATION DOE-RL/WHC HANFORD, WA	PROJECT WRAP FACILITY MODULE 2A	UE&C JOB NO. 6237.006 / ACCOUNT NO.	DATE: 04/20/92 / BY: JPJ

REVISIONS (DATE & BY)	A		B		C		D	
	E		F		G		H	

SERVICE	MANUFACTURER	NO. REQ'D	SOURCE OF QUOTE
OPC ROTARY FEEDER		1	

CONDITIONS OF SERVICE

FLOW MEDIA: ORDINARY PORTLAND CEMENT (OPC)		BULK DENSITY: 80 LBS./CU. FT.
FLOW RATE: 60 CU FT/HR	4,800 LBS./HR.	MOIST CONTENT: %
TEMPERATURE: 10-100°F	INLET PRESSURE: 7-8 PSIA	DISCHARGE PRESSURE: PSIA
PARTICLE SIZE	PELLETS:	GRANULAR:
	POWDER: < 100 MESH	OTHER:
FLOW CHARACTERISTICS	RESISTANCE TO IMPACT:	CORROSIVE:
	TENDENCY TO PACK:	ABRASIVE: MILDLY
	OTHER: FREE FLOWING	FEEDER SIZE: 6" DIA
FEEDER APPLICATION	☐ MANUAL ☐ AUTOMATIC ☐ OTHER	

SPECIFICATIONS

MATERIALS OF	BODY:	ENDPLATES:
	ROTOR: REDUCED CAPACITY-CLOSED END	SHAFT:
	PACKING GLAND:	REPLACEABLE TIP: AR STEEL
SHAFT SEALS	☒ PACKING TYPE & MATERIAL: MOLY IMPREGNATED URETHANE U-CUP	
	☐ MECHANICAL ROTARY	AIR OR GAS PURGE CONN.:
DESIGN PRESS: 14.9 PSIG		DESIGN TEMPERATURE: 101°F
DESIGN FILL EFFICIENCY: %		ROTOR DISPLACEMENT: CU. FT./REV.
ROTOR SPEED:	DESIGN RPM:	MAXIMUM RPM:
CLEARANCES-ROTOR TIP TO BODY, IN.	AT AMBIENT TEMP.:	AT OPER. TEMP.: AT DESIGN TEMP.:
BEARINGS	☒ BALL ☐ SLEEVE ☐ OIL ☐ GREASE ☐ PRE-LUBED & SEALED	
TYPE DRIVE	☐ DIRECT CONN. ☒ CHAIN ☐ OTHER	
	OUTPUT TORQUE: SPEED RATIO: DRIVE SPROCKET DIA:	
	DRIVEN SPROCKET DIA:	DRIVE GUARD SUPPLIED BY: VALVE VENDOR
SPEED CONTROL	☐ MANUAL ☐ AUTOMATIC ☐ BY VENDOR ☐ BY OTHERS	

MOTOR DRIVER

HP:	RPM:	FRAME:	VOLTS/PHASE/CYCLE: 460/3/60
MFR:		TYPE: SQUIRREL CAGE INDUCTION	NEMA DESIGN:
ENCLOSURE:		RATED AMBIENT TEMP.: 40°C	INSUL. CLASS: —
ELEVATION: 710 FT.		FULL LOAD AMPS:	SPACE HEATERS:

GENERAL INFORMATION

APPROX. WT.:	ENTIRE UNIT:	ROTARY VALVE ONLY:

REMARKS:

9413227.0584

UNITED ENGINEERS & CONSTRUCTORS A Raytheon Company Western Operations	EQUIPMENT DATA SHEET ☒ CDR ☐ TITLE I ☐ TITLE II ☐ TITLE III	ITEM NUMBER Y-05-210	PAGE 1 OF 1
CUSTOMER & LOCATION DOE-RL/WHC HANFORD, WA	PROJECT WRAP FACILITY MODULE 2A	UE&C JOB NO. 6237.006	DATE: 04/20/92
		ACCOUNT NO.	BY: JPJ

REVISIONS (DATE & BY)	A		B		C		D	
	E		F		G		H	

SERVICE	MANUFACTURER	NO. REQ'D	SOURCE OF QUOTE
PFA SILO ROTARY FEEDER		1	

CONDITIONS OF SERVICE

FLOW MEDIA: PULVERIZED FLY ASH (PFA)		BULK DENSITY: 40 LBS./CU. FT.	
FLOW RATE: 90 CU FT/HR	3,600 LBS./HR.	MOIST CONTENT: %	
TEMPERATURE: 10-100°F	INLET PRESSURE: 7-8 PSIA	DISCHARGE PRESSURE: PSIA	
PARTICLE SIZE	PELLETS:	GRANULAR:	
	POWDER: < 100 MESH	OTHER:	
FLOW CHARACTERISTICS	RESISTANCE TO IMPACT:	CORROSIVE:	
	TENDENCY TO PACK:	ABRASIVE: VERY	
	OTHER: FREE FLOWING	FEEDER SIZE: 6" DIA	
FEEDER APPLICATION	☐ MANUAL	☐ AUTOMATIC	☐ OTHER

SPECIFICATIONS

MATERIALS OF	BODY:	ENDPLATES:	
	ROTOR: REDUCED CAPACITY-CLOSED END	SHAFT:	
	PACKING GLAND:	REPLACEABLE TIP: AR STEEL	
SHAFT SEALS	☐ PACKING TYPE & MATERIAL: MOLY IMPREGNATED URETHANE U-CUP		
	☐ MECHANICAL ROTARY	AIR OR GAS PURGE CONN.:	
DESIGN PRESS: 14.9 PSIG		DESIGN TEMPERATURE: 101°F	
DESIGN FILL EFFICIENCY: %		ROTOR DISPLACEMENT: CU. FT./REV.	
ROTOR SPEED:	DESIGN RPM:	MAXIMUM RPM:	
CLEARANCES-ROTOR TIP TO BODY, IN.	AT AMBIENT TEMP.:	AT OPER. TEMP.:	AT DESIGN TEMP.:
BEARINGS	☒ BALL ☐ SLEEVE ☐ OIL ☐ GREASE ☐ PRE-LUBED & SEALED		
TYPE DRIVE	☐ DIRECT CONN. X CHAIN ☐ OTHER		
	OUTPUT TORQUE: SPEED RATIO: DRIVE SPROCKET DIA:		
	DRIVEN SPROCKET DIA:	DRIVE GUARD SUPPLIED BY: VALVE VENDOR	
SPEED CONTROL	☐ MANUAL ☐ AUTOMATIC ☐ BY VENDOR ☐ BY OTHERS		

MOTOR DRIVER

HP:	RPM:	FRAME:	VOLTS/PHASE/CYCLE: 460/3/60
MFR:		TYPE: SQUIRREL CAGE INDUCTION	NEMA DESIGN:
ENCLOSURE:		RATED AMBIENT TEMP.: 40°C	INSUL. CLASS:
ELEVATION: 710 FT.		FULL LOAD AMPS:	SPACE HEATERS:

GENERAL INFORMATION

APPROX. WT.:	ENTIRE UNIT:	ROTARY VALVE ONLY:

REMARKS:

9413227.0585

UNITED ENGINEERS & CONSTRUCTORS A Raytheon Company Western Operations	EQUIPMENT DATA SHEET ☒ CDR ☐ TITLE I ☐ TITLE II ☐ TITLE III	ITEM NUMBER Y-05-211	PAGE 1 OF 1
CUSTOMER & LOCATION DOE-RL/WHC HANFORD, WA	PROJECT WRAP FACILITY MODULE 2A	UE&C JOB NO. 6237.006 / ACCOUNT NO.	DATE: 04/20/92 / BY: JPJ

REVISIONS (DATE & BY)	A		B		C		D	
	E		F		G		H	

SERVICE	MANUFACTURER	NO. REQ'D	SOURCE OF QUOTE
PFA HOPPER ROTARY FEEDER		1	

CONDITIONS OF SERVICE

FLOW MEDIA: PULVERIZED FLY ASH (PFA)		BULK DENSITY: 40 LBS./CU. FT.
FLOW RATE: 90 CU FT/HR	3,600 LBS./HR.	MOIST CONTENT: %
TEMPERATURE: 10-100°F	INLET PRESSURE: 7-8 PSIA	DISCHARGE PRESSURE: PSIA
PARTICLE SIZE	PELLETS:	GRANULAR:
	POWDER: < 100 MESH	OTHER:
FLOW CHARACTERISTICS	RESISTANCE TO IMPACT:	CORROSIVE:
	TENDENCY TO PACK:	ABRASIVE: VERY
	OTHER: FREE FLOWING	FEEDER SIZE: 6" DIA
FEEDER APPLICATION	☐ MANUAL	☐ AUTOMATIC ☐ OTHER

SPECIFICATIONS

MATERIALS OF	BODY:	ENDPLATES:
	ROTOR: REDUCED CAPACITY-CLOSED END	SHAFT:
	PACKING GLAND:	REPLACEABLE TIP: AR STEEL
SHAFT SEALS	☒ PACKING TYPE & MATERIAL: MOLY IMPREGNATED URETHANE U-CUP	
	☐ MECHANICAL ROTARY	AIR OR GAS PURGE CONN.:
DESIGN PRESS: 14.9 PSIG		DESIGN TEMPERATURE: 101°F
DESIGN FILL EFFICIENCY: %		ROTOR DISPLACEMENT: CU. FT./REV.
ROTOR SPEED:	DESIGN RPM:	MAXIMUM RPM:
CLEARANCES-ROTOR TIP TO BODY, IN.	AT AMBIENT TEMP.:	AT OPER. TEMP.: AT DESIGN TEMP.:
BEARINGS	☒ BALL ☐ SLEEVE ☐ OIL ☐ GREASE ☐ PRE-LUBED & SEALED	
TYPE DRIVE	☐ DIRECT CONN. ☒ CHAIN ☐ OTHER	
	OUTPUT TORQUE: SPEED RATIO: DRIVE SPROCKET DIA:	
	DRIVEN SPROCKET DIA:	DRIVE GUARD SUPPLIED BY: VALVE VENDOR
SPEED CONTROL	☐ MANUAL ☐ AUTOMATIC ☐ BY VENDOR ☐ BY OTHERS	

MOTOR DRIVER

HP:	RPM:	FRAME:	VOLTS/PHASE/CYCLE: 460/3/60
MFR:		TYPE: SQUIRREL CAGE INDUCTION	NEMA DESIGN:
ENCLOSURE:		RATED AMBIENT TEMP.: 40°C	INSUL. CLASS:
ELEVATION: 710 FT.		FULL LOAD AMPS:	SPACE HEATERS:

GENERAL INFORMATION

APPROX. WT.:	ENTIRE UNIT:	ROTARY VALVE ONLY:

REMARKS:

UNITED ENGINEERS & CONSTRUCTORS A Raytheon Company Western Operations	EQUIPMENT DATA SHEET ☒ CDR ☐ TITLE I ☐ TITLE II ☐ TITLE III	ITEM NUMBER M-05-202	PAGE 1 OF 1

CUSTOMER & LOCATION	PROJECT	UE&C JOB NO. 6237.006	DATE: 05/22/92
DOE-RL/WHC HANFORD, WA	WRAP FACILITY MODULE 2A	ACCOUNT NO.	BY: JPJ

REVISIONS (DATE & BY)	A		B		C		D	
	E		F		G		H	

SERVICE	MANUFACTURER	NO. REQ'D	SOURCE OF QUOTE
POWDER BLENDER		1	

PHYSICAL PROPERTIES OF MATERIALS

COMPONENT	FLOW RATE	WT. % *	S. G.	VIS. (CP)	TEMP.	
OPC			1.28			
BFS			0.96			
PFA			0.64			

MIXTURE: S.G. 1.0 VIS. ____ CP

SOLID PROPERTIES: ☐ SOLUBLE ☒ INSOLUBLE ☒ ABRASIVE

OPERATING CONDITIONS

OPERATING PRESS. ATMOS PSIG TEMP. AMBIENT
LEVEL IN TANK 80% FULL
CLASS OF OPERATION: ☐ HEAT TRANSFER ☐ DISSOLVING
☒ BLENDING MISCIBLE SOLIDS ☐ GAS DISPERSION
☐ BLENDING MISCIBLE LIQUIDS
☐ DISPENSING INSOLUBLE LIQUIDS ☐ SUSPENDING SOLIDS
MIXING CYCLE: ☐ CONTINUOUS TOTAL FLOW RATE ____ GPM
☒ BATCH DESIGNED TO MIX 8 FT³ IN 10 MINUTES

VESSEL DETAILS

SIZE: 10 FT³ TYPE: SURGE HOPPER
TOP: ☐ OPEN ☒ CLOSED BOTTOM: ☐ FLAT ☒ CONE ☐ ROUND
MATERIAL OF CONSTRUCTION: MILD STEEL
ENTRANCE: ☒ TOP ☐ SIDE
NOZZLE: SIZE & RATING: ____ MAT.: ____
DESIGN PRESS.: ATMOS PSIG TEMP. AMBIENT
☐ COILS ☐ BAFFLES SKETCH NO.: ____

MIXER DETAILS

☐ IMPELLER ☐ TURBINE ☐ PROPELLER
NO. OF IMPELLERS: ____ SIZE: ____ BLADES EA.: ____
IMPELLER RPM: ____ BHP: 0.75 MAT.: ____
BLADES: ☐ FIXED ☐ REMOVABLE ☐ FLAT
☒ UP THRUST ☐ DOWN THRUST ☐ STABILIZER REQ'D.
SHAFT: DIAM.: ____ LENGTH: ____
MAT.: ____ CRITICAL SPEED: ____ RPM
SEALING REQUIREMENTS: ☐ PACKING TYPE: ____
☐ MECH. SEAL MFG. ☐ MODEL: ____
☐ CARTRIDGE ☐ DOUBLE ☐ SINGLE
MOUNTING: ☐ NOZZLE ☐ CLAMP ☐ BEAM

DRIVE DETAILS

☐ GEAR REDUCER:
TYPE: ____ RATIO: ____ LUBE: ____
AGMA CLASS: ____ SERVICE FACTOR: 1.25
COUPLINGS: MFG. & MODEL: ____
H.S. SHAFT: ☐ FLEXIBLE ☐ RIGID RPM: ____
L.S. SHAFT: ☐ FLEXIBLE ☐ RIGID RPM: ____
BEARINGS: ☐ RADIAL ☐ THRUST ☐ STEADY
MOTOR MFG.: ____
FURN. BY: ____ MTD. BY: ____
HP: ____ RPM: ____ VOLTS/PHASE/Hz: 480/3/60
ENC.: ____ INSUL.: ____ LUBE: ____
FRAME: ____ FULL LOAD AMPS: ____ STARTING AMPS: ____

GENERAL INFORMATION

WEIGHT: ____ DIMENSION PRINT NO.: ____

REMARKS: *FOR BATCH OPERATIONS

9413227.0587

UNITED ENGINEERS & CONSTRUCTORS A Raytheon Company Western Operations	EQUIPMENT DATA SHEET ☒ CDR ☐ TITLE I ☐ TITLE II ☐ TITLE III	ITEM NUMBER C-05-102	PAGE 1 OF 1

CUSTOMER & LOCATION	PROJECT	UE&C JOB NO. 6237.006	DATE: 05/19/92
DOE-RL/WHC HANFORD, WA	WRAP FACILITY MODULE 2A	ACCOUNT NO.	BY: JPJ

REVISIONS (DATE & BY)	A		B		C		D	
	E		F		G		H	

SERVICE: ADDITIVE DUST COLLECTOR FAN

MANUFACTURER:

SOURCE OF QUOTE:

NO. FANS REQ'D: 1

SIZE & MODEL:

NO. MOTORS REQ'D: 1 ITEM NO: PROVIDED BY: MTD. BY: REF. PAGE:

NO. TURBINES REQ'D: ITEM NO: PROVIDED BY: MTD. BY: REF. PAGE:

CONDITIONS OF SERVICE, EACH FAN

FLUID HANDLED: AIR BULK DENSITY: 70 PCF

COMPOSITION: GYPSUM DUST

PARTICULATES: TYPE: SIZE: MINUS 100 MESH GRAINS/CU. FT.: 10

BAROMETER: 14.4 PSIA REL. HUMIDITY: 15% CORR./EROS. CAUSED BY:

TEMPERATURE, SUCTION: AMBIENT °F TEMPERATURE DISCHARGE:

SUCTION PRESSURE: (PSIA)("H.OABS) DISCH. PRESSURE: (PSIA)("H.OABS) FAN STATIC PRESSURE: (PSI)("H.OABS)

CAPACITY, NORMAL @S.P.T.: 30 ACFM CAPACITY, DESIGN @S.P.T.: 40 ACFM

CAPACITY, DESIGN @ SUCTION CONDITIONS: ACFM

SPECIFICATIONS

☒ SINGLE WIDTH, SINGLE INLET ☐ DOUBLE WIDTH, DOUBLE INLET

ARRANGEMENT: CLASS: UNCLASSIFIED

INLET	SIZE:	RATING:	LOCATION:	FAN SPEED NORMAL: RPM
OUTLET	SIZE:	RATING:	LOCATION:	FAN SPEED MAXIMUM: RPM
MATERIALS OF CONSTRUCTION	CASING:	IMP:		DESIGN CONDITIONS:
	SHAFT:	SHAFT SLEEVE:		CUT. VEL. DESIGN: FPM OUT. VEL. MAX.: FPM
PACKING	MFG:	TYPE:	NO. RINGS:	CASE DESIGN PRESSURE: PSIG
MECH. SEAL	MFG:	TYPE:		CASE DESIGN TEMPERATURE: °F
COUPLING	MFG:	TYPE:		IMP. DIA. & TYPE:
DAMPERS	☐ INLET	☐ OUTLET		ACCESS DOOR LOCATION:

BEARINGS ☐ BALL ☐ SLEEVE ☐ ROLLER ☐ OIL LUBRICATED ☐ GREASE LUBRICATED

COOLING ☐ WATER ☐ WATER-GLYCOL GPM: TEMP.: ΔT: °F PRESSURE: PSIG

DRIVE TYPE ☐ DIRECT ☐ GEAR ☐ V-BELT ☐ DRIVE GUARD

DRIVER POSITION FOR V-BELT DRIVE (SEE SKETCH BELOW): ☐ W ☐ X ☐ Y ☐ Z

MOTOR DRIVE

HP: 5 RPM: FRAME: VOLTS/PHASE/CYCLE: 460/3/60

MFR: TYPE: SQUIRREL CAGE INDUCTION NEMA DESIGN:

ENCLOSURE: RATED AMBIENT TEMP: 40°C INSUL. CLASS:

ELEVATION: 710 FT. FULL LOAD AMPS: SPACE HEATERS:

GENERAL INFORMATION

APPROX. WT.:	FAN & BASE:	FAN:	MOTOR:	TURBINE:	GEAR:

INSP. REQ'D.: ☐ NON-WIT. PERF. ☐ WITNESSED PERF. ☐ SHOP TEST ☐ DISMANT. & INSP. AFTER TEST ☐ OTHER:

PERFORMANCE CURVE NO.: DIMENSIONAL PRINT NO.:

CODE REQUIREMENTS & SPECS.

REMARKS

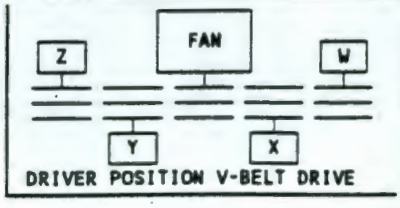

DRIVER POSITION V-BELT DRIVE

UNITED ENGINEERS & CONSTRUCTORS A Raytheon Company Western Operations	EQUIPMENT DATA SHEET ☒ CDR ☐ TITLE I ☐ TITLE II ☐ TITLE III	ITEM NUMBER C-05-103	PAGE 1 OF 1

CUSTOMER & LOCATION	PROJECT	UE&C JOB NO. 6237.006	DATE: 05/19/92
DOE-RL/WHC HANFORD, WA	WRAP FACILITY MODULE 2A	ACCOUNT NO.	BY: JPJ

REVISIONS (DATE & BY)	A		B		C		D	
	E		F		G		H	

SERVICE: PFA DUST COLLECTOR FAN	MANUFACTURER:	SOURCE OF QUOTE:
NO. FANS REQ'D: 1	SIZE & MODEL:	
NO. MOTORS REQ'D: 1	ITEM NO: PROVIDED BY: MTD. BY:	REF. PAGE:
NO. TURBINES REQ'D:	ITEM NO: PROVIDED BY: MTD. BY:	REF. PAGE:

CONDITIONS OF SERVICE, EACH FAN

FLUID HANDLED: AIR			BULK DENSITY: 40 PCF
COMPOSITION: PULVERIZED FLY ASH			
PARTICULATES:	TYPE:	SIZE: 1/8" MINUS	GRAINS/CU. FT.: 10
BAROMETER: 14.4 PSIA	REL. HUMIDITY: 15%	CORR./EROS. CAUSED BY:	
TEMPERATURE, SUCTION: AMBIENT °F		TEMPERATURE DISCHARGE:	
SUCTION PRESSURE: (PSIA)("H,OABS)	DISCH. PRESSURE: (PSIA)("H,OABS)	FAN STATIC PRESSURE: (PSI)("H,OABS)	
CAPACITY, NORMAL @S.P.T.: 30 ACFM		CAPACITY, DESIGN @S.P.T.: 80 ACFM	
CAPACITY, DESIGN & SUCTION CONDITIONS:			ACFM

SPECIFICATIONS

☒ SINGLE WIDTH, SINGLE INLET				☐ DOUBLE WIDTH, DOUBLE INLET		
ARRANGEMENT:				CLASS: UNCLASSIFIED		
INLET	SIZE:	RATING:	LOCATION:	FAN SPEED NORMAL:		RPM
OUTLET	SIZE:	RATING:	LOCATION:	FAN SPEED MAXIMUM:		RPM
MATERIALS OF CONSTRUCTION	CASING:	IMP:		DESIGN CONDITIONS:		
	SHAFT:	SHAFT SLEEVE:		CUT. VEL. DESIGN:	FPM OUT. VEL. MAX.:	FPM
PACKING	MFG:	TYPE:	NO. RINGS:	CASE DESIGN PRESSURE:		PSIG
MECH. SEAL	MFG:	TYPE:		CASE DESIGN TEMPERATURE:		°F
COUPLING	MFG:	TYPE:		IMP. DIA. & TYPE:		
DAMPERS	☐ INLET	☐ OUTLET		ACCESS DOOR LOCATION:		
BEARINGS	☐ BALL	☐ SLEEVE	☐ ROLLER	☐ OIL LUBRICATED	☐ GREASE LUBRICATED	
COOLING	☐ WATER	☐ WATER-GLYCOL	GPM:	TEMP.:	Δ T: °F	PRESSURE: PSIG
DRIVE TYPE	☐ DIRECT		☐ GEAR	☐ V-BELT	☐ DRIVE GUARD	
DRIVER POSITION FOR V-BELT DRIVE (SEE SKETCH BELOW): ☐ W ☐ X ☐ Y ☐ Z						

MOTOR DRIVE

HP: 5	RPM:	FRAME:	VOLTS/PHASE/CYCLE: 460/3/60
MFR:		TYPE: SQUIRREL CAGE INDUCTION	NEMA DESIGN:
ENCLOSURE:		RATED AMBIENT TEMP: 40°C	INSUL. CLASS:
ELEVATION: 710 FT		FULL LOAD AMPS:	SPACE HEATERS:

GENERAL INFORMATION

APPROX. WT.:	FAN & BASE:	FAN:	MOTOR:	TURBINE:	GEAR:
INSP. REQ'D.:	☐ NON-WIT. PERF.		☐ WITNESSED PERF.		☐ SHOP TEST
	☐ DISMANT. & INSP. AFTER TEST		☐ OTHER:		
PERFORMANCE CURVE NO.:			DIMENSIONAL PRINT NO.:		
CODE REQUIREMENTS & SPECS.					

REMARKS

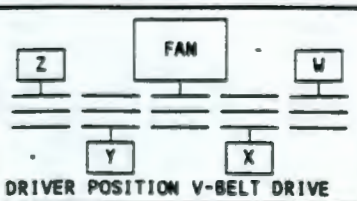

DRIVER POSITION V-BELT DRIVE

9413227.0589

UNITED ENGINEERS & CONSTRUCTORS A Raytheon Company Western Operation	EQUIPMENT DATA SHEET ☒ CDR ☐ TITLE I ☐ TITLE II ☐ TITLE III	ITEM NUMBER C-05-104	PAGE 1 OF 1

CUSTOMER & LOCATION	PROJECT	UE&C JOB NO. 6237.006	DATE: 05/19/92
DOE-RL/WHC HANFORD, WA	WRAP FACILITY MODULE 2A	ACCOUNT NO.	BY: JPJ

REVISIONS (DATE & BY)	A		B		C		D	
	E		F		G		H	

SERVICE: BFS SILO DUST COLLECTION FAN	MANUFACTURER:	SOURCE OF QUOTE:
NO. FANS REQ'D: 1	SIZE & MODEL:	
NO. MOTORS REQ'D: 1	ITEM NO: PROVIDED BY: MTD. BY:	REF. PAGE:
NO. TURBINES REQ'D:	ITEM NO: PROVIDED BY: MTD. BY:	REF. PAGE:

CONDITIONS OF SERVICE, EACH FAN

FLUID HANDLED: AIR			BULK DENSITY: 60 PCF
COMPOSITION: BLAST FURNACE SLAG			
PARTICULATES:	TYPE:	SIZE: 1/8" MINUS	GRAINS/CU. FT.: 10
BAROMETER: 14.4 PSIA	REL. HUMIDITY: 15%	CORR./EROS. CAUSED BY:	
TEMPERATURE, SUCTION: AMBIENT °F		TEMPERATURE DISCHARGE:	
SUCTION PRESSURE: (PSIA)("H,OABS)	DISCH. PRESSURE: (PSIA)("H,OABS)	FAN STATIC PRESSURE: (PSI)("H,OABS)	
CAPACITY, NORMAL @S.P.T.: 80 ACFM		CAPACITY, DESIGN @S.P.T.: 80 ACFM	
CAPACITY, DESIGN & SUCTION CONDITIONS:			ACFM

SPECIFICATIONS

☒ SINGLE WIDTH, SINGLE INLET				☐ DOUBLE WIDTH, DOUBLE INLET		
ARRANGEMENT:				CLASS: UNCLASSIFIED		
INLET	SIZE:	RATING:	LOCATION:	FAN SPEED NORMAL:		RPM
OUTLET	SIZE:	RATING:	LOCATION:	FAN SPEED MAXIMUM:		RPM
MATERIALS OF CONSTRUCTION	CASING:	IMP:		DESIGN CONDITIONS:		
	SHAFT:	SHAFT SLEEVE:		CUT. VEL. DESIGN:	FPM OUT. VEL. MAX.:	FPM
PACKING	MFG:	TYPE:	NO. RINGS:	CASE DESIGN PRESSURE:		PSIG
MECH. SEAL	MFG:	TYPE:		CASE DESIGN TEMPERATURE:		°F
COUPLING	MFG:	TYPE:		IMP. DIA. & TYPE:		
DAMPERS	☐ INLET	☐ OUTLET		ACCESS DOOR LOCATION:		
BEARINGS	☐ BALL	☐ SLEEVE	☐ ROLLER	☐ OIL LUBRICATED	☐ GREASE LUBRICATED	
COOLING	☐ WATER	☐ WATER-GLYCOL	GPM:	TEMP.:	Δ T: °F	PRESSURE: PSIG
DRIVE TYPE	☐ DIRECT		☐ GEAR	☐ V-BELT	☐ DRIVE GUARD	
DRIVER POSITION FOR V-BELT DRIVE (SEE SKETCH BELOW): ☐ W ☐ X ☐ Y ☐ Z						

MOTOR DRIVE

HP: 5	RPM:	FRAME:	VOLTS/PHASE/CYCLE: 460/3/60
MFR:		TYPE: SQUIRREL CAGE INDUCTION	NEMA DESIGN:
ENCLOSURE:		RATED AMBIENT TEMP: 40°C	INSUL. CLASS:
ELEVATION: 710 FT		FULL LOAD AMPS:	SPACE HEATERS:

GENERAL INFORMATION

APPROX. WT.:	FAN & BASE:	FAN:	MOTOR:	TURBINE:	GEAR:
INSP. REQ'D.:	☐ NON-WIT. PERF.		☐ WITNESSED PERF.		☐ SHOP TEST
	☐ DISMANT. & INSP. AFTER TEST		☐ OTHER:		
PERFORMANCE CURVE NO.:			DIMENSIONAL PRINT NO.:		
CODE REQUIREMENTS & SPECS.					

REMARKS

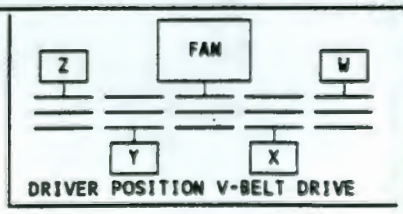

UNITED ENGINEERS & CONSTRUCTORS A Raytheon Company Western Operations	EQUIPMENT DATA SHEET ☒ CDR ☐ TITLE I ☐ TITLE II ☐ TITLE III	ITEM NUMBER C-05-105	PAGE 1 OF 1

CUSTOMER & LOCATION	PROJECT	UE&C JOB NO. 6237.006	DATE: 05/19/92
DOE-RL/WHC HANFORD, WA	WRAP FACILITY MODULE 2A	ACCOUNT NO.	BY: JPJ

REVISIONS (DATE & BY)	A		B		C		D	
	E		F		G		H	

SERVICE: OPC SILO DUST COLLECTOR FAN	MANUFACTURER:	SOURCE OF QUOTE:
NO. FANS REQ'D: 1	SIZE & MODEL:	
NO. MOTORS REQ'D: 1	ITEM NO: PROVIDED BY: MTD. BY:	REF. PAGE:
NO. TURBINES REQ'D:	ITEM NO: PROVIDED BY: MTD. BY:	REF. PAGE:

CONDITIONS OF SERVICE, EACH FAN

FLUID HANDLED: AIR			BULK DENSITY: 80 PCF
COMPOSITION: ORDINARY PORTLAND CEMENT			
PARTICULATES:	TYPE:	SIZE: MINUS 100 MESH	GRAINS/CU. FT.: 10
BAROMETER: 14.4 PSIA	REL. HUMIDITY: 15%	CORR./EROS. CAUSED BY:	
TEMPERATURE, SUCTION: AMBIENT °F		TEMPERATURE DISCHARGE:	
SUCTION PRESSURE: (PSIA)("H,OABS)	DISCH. PRESSURE: (PSIA)("H,OABS)	FAN STATIC PRESSURE: (PSI)("H,OABS)	
CAPACITY, NORMAL @S.P.T.: 30 ACFM		CAPACITY, DESIGN @S.P.T.: 40 ACFM	
CAPACITY, DESIGN & SUCTION CONDITIONS:			ACFM

SPECIFICATIONS

☒ SINGLE WIDTH, SINGLE INLET				☐ DOUBLE WIDTH, DOUBLE INLET		
ARRANGEMENT:				CLASS: UNCLASSIFIED		
INLET	SIZE:	RATING:	LOCATION:	FAN SPEED NORMAL:		RPM
OUTLET	SIZE:	RATING:	LOCATION:	FAN SPEED MAXIMUM:		RPM
MATERIALS OF CONSTRUCTION	CASING:	IMP:		DESIGN CONDITIONS:		
	SHAFT:	SHAFT SLEEVE:		CUT. VEL. DESIGN:	FPM OUT. VEL. MAX.:	FPM
PACKING	MFG:	TYPE:	NO. RINGS:	CASE DESIGN PRESSURE:		PSIG
MECH. SEAL	MFG:	TYPE:		CASE DESIGN TEMPERATURE:		°F
COUPLING	MFG:	TYPE:		IMP. DIA. & TYPE:		
DAMPERS	☐ INLET	☐ OUTLET		ACCESS DOOR LOCATION:		
BEARINGS	☐ BALL	☐ SLEEVE	☐ ROLLER	☐ OIL LUBRICATED	☐ GREASE LUBRICATED	
COOLING	☐ WATER	☐ WATER-GLYCOL	GPM:	TEMP.:	Δ T: °F	PRESSURE: PSIG
DRIVE TYPE	☐ DIRECT		☐ GEAR	☐ V-BELT	☐ DRIVE GUARD	

DRIVER POSITION FOR V-BELT DRIVE (SEE SKETCH BELOW): ☐ W ☐ X ☐ Y ☐ Z

MOTOR DRIVE

HP: 5	RPM:	FRAME:	VOLTS/PHASE/CYCLE: 460/3/60
MFR:		TYPE: SQUIRREL CAGE INDUCTION	NEMA DESIGN:
ENCLOSURE:		RATED AMBIENT TEMP: 40°C	INSUL. CLASS:
ELEVATION: 710 FT		FULL LOAD AMPS:	SPACE HEATERS:

GENERAL INFORMATION

APPROX. WT.:	FAN & BASE:	FAN:	MOTOR:	TURBINE:	GEAR:
INSP. REQ'D.:	☐ NON-WIT. PERF.		☐ WITNESSED PERF.		☐ SHOP TEST
	☐ DISMANT. & INSP. AFTER TEST		☐ OTHER:		
PERFORMANCE CURVE NO.:			DIMENSIONAL PRINT NO.:		
CODE REQUIREMENTS & SPECS.					

REMARKS

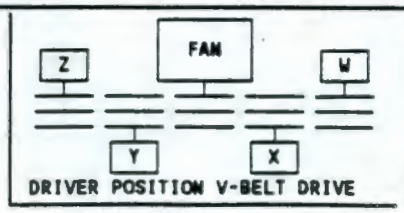

9413227.0591

UNITED ENGINEERS & CONSTRUCTORS A Raytheon Company Western Operations	EQUIPMENT DATA SHEET ☒ CDR ☐ TITLE I ☐ TITLE II ☐ TITLE III	ITEM NUMBER Y-05-101	PAGE 1 OF 1

CUSTOMER & LOCATION	PROJECT	UE&C JOB NO. 6237.006	DATE: 04/20/92
DOE-RL/WHC HANFORD, WA	WRAP FACILITY MODULE 2A	ACCOUNT NO.	BY: JPJ

REVISIONS (DATE & BY)	A		B		C		D	
	E		F		G		H	

SERVICE	MANUFACTURER	NO. REQ'D	SOURCE OF QUOTE
BULK ADDITIVE ROTARY FEEDER		1	

CONDITIONS OF SERVICE

FLOW MEDIA: GYPSUM		BULK DENSITY: 70 LBS./CU. FT.
FLOW RATE: 100 CU FT/HR	7,000 LBS./HR.	MOIST CONTENT: 5 %
TEMPERATURE: 10-100°F	INLET PRESSURE: 7-8 PSIA	DISCHARGE PRESSURE: PSIA
PARTICLE SIZE	PELLETS:	GRANULAR:
	POWDER: < 100 MESH	OTHER:
FLOW CHARACTERISTICS	RESISTANCE TO IMPACT:	CORROSIVE:
	TENDENCY TO PACK:	ABRASIVE: HIGHLY
	OTHER: FREE FLOWING	FEEDER SIZE: 6" DIA
FEEDER APPLICATION	☐ MANUAL	☒ AUTOMATIC ☐ OTHER

SPECIFICATIONS

MATERIALS OF	BODY:	ENDPLATES:
	ROTOR: CLOSED END	SHAFT:
	PACKING GLAND:	REPLACEABLE TIP: AR STEEL
SHAFT SEALS	☒ PACKING TYPE & MATERIAL: MOLY IMPREGNATED URETHANE U-CUP	
	☐ MECHANICAL ROTARY	AIR OR GAS PURGE CONN.:
DESIGN PRESS: 14.9 PSIG		DESIGN TEMPERATURE: 101°F
DESIGN FILL EFFICIENCY: %		ROTOR DISPLACEMENT: CU. FT./REV.
ROTOR SPEED:	DESIGN RPM:	MAXIMUM RPM:
CLEARANCES-ROTOR TIP TO BODY, IN.	AT AMBIENT TEMP.:	AT OPER. TEMP.: AT DESIGN TEMP.:
BEARINGS	☒ BALL ☐ SLEEVE ☐ OIL ☐ GREASE ☐ PRE-LUBED & SEALED	
TYPE DRIVE	☐ DIRECT CONN. ☒ CHAIN ☐ OTHER	
	OUTPUT TORQUE: SPEED RATIO:	DRIVE SPROCKET DIA:
	DRIVEN SPROCKET DIA:	DRIVE GUARD SUPPLIED BY: VALVE VENDOR
SPEED CONTROL	☐ MANUAL ☐ AUTOMATIC ☐ BY VENDOR ☐ BY OTHERS	

MOTOR DRIVER

HP:	RPM:	FRAME:	VOLTS/PHASE/CYCLE: 460/3/60
MFR:		TYPE: SQUIRREL CAGE INDUCTION	NEMA DESIGN:
ENCLOSURE:		RATED AMBIENT TEMP.: 40°C	INSUL. CLASS:
ELEVATION: 710 FT.		FULL LOAD AMPS:	SPACE HEATERS:

GENERAL INFORMATION

APPROX. WT.:	ENTIRE UNIT:	ROTARY VALVE ONLY:

REMARKS:

9413227.0592

UNITED ENGINEERS & CONSTRUCTORS A Raytheon Company Western Operations	EQUIPMENT DATA SHEET ☒ CDR ☐ TITLE I ☐ TITLE II ☐ TITLE III	ITEM NUMBER Y-05-102	PAGE 1 OF 1
CUSTOMER & LOCATION DOE-RL/WHC HANFORD, WA	PROJECT WRAP FACILITY MODULE 2A	UE&C JOB NO. 6237.006 / ACCOUNT NO.	DATE: 04/20/92 / BY: JPJ

REVISIONS (DATE & BY)	A	B	C	D
	E	F	G	H

SERVICE	MANUFACTURER	NO. REQ'D	SOURCE OF QUOTE
BULK PFA ROTARY FEEDER		1	

CONDITIONS OF SERVICE

FLOW MEDIA: PULVERIZED FLY ASH		BULK DENSITY: 40 LBS./CU. FT.
FLOW RATE: 150 CU FT/HR	6,000 LBS./HR.	MOIST CONTENT: 5 %
TEMPERATURE: 10-100°F	INLET PRESSURE: 7-8 PSIA	DISCHARGE PRESSURE: PSIA
PARTICLE SIZE	PELLETS:	GRANULAR:
	POWDER: < 100 MESH	OTHER:
FLOW CHARACTERISTICS	RESISTANCE TO IMPACT:	CORROSIVE:
	TENDENCY TO PACK:	ABRASIVE: VERY
	OTHER: FREE FLOWING	FEEDER SIZE: 6" DIA
FEEDER APPLICATION	☐ MANUAL	☐ AUTOMATIC ☐ OTHER

SPECIFICATIONS

MATERIALS OF	BODY:	ENDPLATES:
	ROTOR: CLOSED ENDS	SHAFT:
	PACKING GLAND:	REPLACEABLE TIP: AR STEEL
SHAFT SEALS	☒ PACKING TYPE & MATERIAL: MOLY IMPREGNATED URETHANE U-CUP	
	☐ MECHANICAL ROTARY	AIR OR GAS PURGE CONN.:
DESIGN PRESS: 14.9 PSIG		DESIGN TEMPERATURE: 101°F
DESIGN FILL EFFICIENCY: %		ROTOR DISPLACEMENT: CU. FT./REV.
ROTOR SPEED:	DESIGN RPM:	MAXIMUM RPM:
CLEARANCES-ROTOR TIP TO BODY, IN.	AT AMBIENT TEMP.:	AT OPER. TEMP.: AT DESIGN TEMP.:
BEARINGS	☒ BALL ☐ SLEEVE ☐ OIL ☐ GREASE	☐ PRE-LUBED & SEALED
TYPE DRIVE	☐ DIRECT CONN. ☒ CHAIN	☐ OTHER
	OUTPUT TORQUE: SPEED RATIO:	DRIVE SPROCKET DIA:
	DRIVEN SPROCKET DIA:	DRIVE GUARD SUPPLIED BY: VALVE VENDOR
SPEED CONTROL	☐ MANUAL ☐ AUTOMATIC	☐ BY VENDOR ☐ BY OTHERS

MOTOR DRIVER

HP:	RPM:	FRAME:	VOLTS/PHASE/CYCLE: 460/3/60
MFR:		TYPE: SQUIRREL CAGE INDUCTION	NEMA DESIGN:
ENCLOSURE:		RATED AMBIENT TEMP.: 40°C	INSUL. CLASS:
ELEVATION: 710 FT.		FULL LOAD AMPS:	SPACE HEATERS:

GENERAL INFORMATION

APPROX. WT.:	ENTIRE UNIT:	ROTARY VALVE ONLY:

REMARKS:

9413227.0593

UNITED ENGINEERS & CONSTRUCTORS A Raytheon Company Western Operations	EQUIPMENT DATA SHEET ☒ CDR ☐ TITLE I ☐ TITLE II ☐ TITLE III	ITEM NUMBER Y-05-103	PAGE 1 OF 1
CUSTOMER & LOCATION DOE-RL/WHC HANFORD, WA	PROJECT WRAP FACILITY MODULE 2A	UE&C JOB NO. 6237.006 / ACCOUNT NO.	DATE: 04/20/92 / BY: JPJ

REVISIONS (DATE & BY)	A	B	C	D
	E	F	G	H

SERVICE	MANUFACTURER	NO. REQ'D	SOURCE OF QUOTE
BFS SILO ROTARY FEEDER		1	

CONDITIONS OF SERVICE

FLOW MEDIA: BLAST FURNACE SLAG (BFS)		BULK DENSITY: 60 LBS./CU. FT.
FLOW RATE: 150 CU FT/HR	9,000 LBS./HR.	MOIST CONTENT: 5 %
TEMPERATURE 10-100 °F	INLET PRESSURE: 7-8 PSIA	DISCHARGE PRESSURE: PSIA
PARTICLE SIZE	PELLETS:	GRANULAR:
	POWDER: FINE 100 MESH + 1/8"	OTHER:
FLOW CHARACTERISTICS	RESISTANCE TO IMPACT:	CORROSIVE:
	TENDENCY TO PACK:	ABRASIVE: VERY
	OTHER: FREE FLOWING	FEEDER SIZE: 6" DIA
FEEDER APPLICATION	☐ MANUAL	☒ AUTOMATIC ☐ OTHER

SPECIFICATIONS

MATERIALS OF	BODY:	ENDPLATES:
	ROTOR: CLOSED END	SHAFT:
	PACKING GLAND:	REPLACEABLE TIP: AR STEEL
SHAFT SEALS	☒ PACKING TYPE & MATERIAL: MOLY INPREGNATED URETHANE U-CUP	
	☐ MECHANICAL ROTARY	AIR OR GAS PURGE CONN.:
DESIGN PRESS: 14.9 PSIG		DESIGN TEMPERATURE: 101°F
DESIGN FILL EFFICIENCY: %		ROTOR DISPLACEMENT: CU. FT./REV.
ROTOR SPEED:	DESIGN RPM:	MAXIMUM RPM:
CLEARANCES-ROTOR TIP TO BODY, IN.	AT AMBIENT TEMP.:	AT OPER. TEMP.: AT DESIGN TEMP.:
BEARINGS	☒ BALL ☐ SLEEVE ☐ OIL ☐ GREASE ☐ PRE-LUBED & SEALED	
TYPE DRIVE	☐ DIRECT CONN. ☒ CHAIN ☐ OTHER	
	OUTPUT TORQUE: SPEED RATIO: DRIVE SPROCKET DIA:	
	DRIVEN SPROCKET DIA:	DRIVE GUARD SUPPLIED BY: VALVE VENDOR
SPEED CONTROL	☐ MANUAL ☐ AUTOMATIC ☐ BY VENDOR ☐ BY OTHERS	

MOTOR DRIVER

HP:	RPM:	FRAME:	VOLTS/PHASE/CYCLE: 460/3/60
MFR:		TYPE: SQUIRREL CAGE INDUCTION	NEMA DESIGN:
ENCLOSURE:		RATED AMBIENT TEMP.: 40°C	INSUL. CLASS:
ELEVATION: 710 FT.		FULL LOAD AMPS:	SPACE HEATERS:

GENERAL INFORMATION

APPROX. WT.:	ENTIRE UNIT:	ROTARY VALVE ONLY:

REMARKS:

9413227.0594

UNITED ENGINEERS & CONSTRUCTORS A Raytheon Company Western Operations	EQUIPMENT DATA SHEET ☒ CDR ☐ TITLE I ☐ TITLE II ☐ TITLE III	ITEM NUMBER Y-05-104	PAGE 1 OF 1
CUSTOMER & LOCATION DOE-RL/WHC HANFORD, WA	PROJECT WRAP FACILITY MODULE 2A	UE&C JOB NO. 6237.006 / ACCOUNT NO.	DATE: 04/20/92 / BY: JPJ

REVISIONS (DATE & BY)	A		B		C		D	
	E		F		G		H	

SERVICE	MANUFACTURER	NO. REQ'D	SOURCE OF QUOTE
OPC SILO ROTARY FEEDER		1	

CONDITIONS OF SERVICE

FLOW MEDIA: ORDINARY PORTLAND CEMENT (OPC)		BULK DENSITY: 80 LBS./CU. FT.
FLOW RATE: 100 CU FT/HR	8,000 LBS./HR.	MOIST CONTENT: 5 %
TEMPERATURE: 10-100°F	INLET PRESSURE: 7-8 PSIA	DISCHARGE PRESSURE: PSIA
PARTICLE SIZE	PELLETS:	GRANULAR:
	POWDER: < 100 MESH	OTHER:
FLOW CHARACTERISTICS	RESISTANCE TO IMPACT:	CORROSIVE:
	TENDENCY TO PACK:	ABRASIVE: MILDLY
	OTHER: FREE FLOWING	FEEDER SIZE: 6" DIA
FEEDER APPLICATION	☐ MANUAL	☒ AUTOMATIC ☐ OTHER

SPECIFICATIONS

MATERIALS OF	BODY:	ENDPLATES:
	ROTOR: CLOSED END	SHAFT:
	PACKING GLAND:	REPLACEABLE TIP: AR STEEL
SHAFT SEALS	☒ PACKING TYPE & MATERIAL: MOLY IMPREGNATED URETHANE U-CUP	
	☐ MECHANICAL ROTARY	AIR OR GAS PURGE CONN.:
DESIGN PRESS: 14.9 PSIG		DESIGN TEMPERATURE: 101°F
DESIGN FILL EFFICIENCY: %		ROTOR DISPLACEMENT: CU. FT./REV.
ROTOR SPEED:	DESIGN RPM:	MAXIMUM RPM:
CLEARANCES-ROTOR TIP TO BODY, IN.	AT AMBIENT TEMP.:	OPER. TEMP.: AT DESIGN TEMP.:
BEARINGS	☒ BALL ☐ SLEEVE ☐ OIL ☐ GREASE ☐ PRE-LUBED & SEALED	
TYPE DRIVE	☐ DIRECT CONN. ☒ CHAIN ☐ OTHER	
	OUTPUT TORQUE: SPEED RATIO: DRIVE SPROCKET DIA:	
	DRIVEN SPROCKET DIA:	DRIVE GUARD SUPPLIED BY: VALVE VENDOR
SPEED CONTROL	☐ MANUAL ☐ AUTOMATIC ☐ BY VENDOR ☐ BY OTHERS	

MOTOR DRIVER

HP:	RPM:	FRAME:	VOLTS/PHASE/CYCLE: 460/3/60
MFR:		TYPE: SQUIRREL CAGE INDUCTION	NEMA DESIGN:
ENCLOSURE:		RATED AMBIENT TEMP.: 40°C	INSUL. CLASS:
ELEVATION: 710 FT.		FULL LOAD AMPS:	SPACE HEATERS:

GENERAL INFORMATION

APPROX. WT.:	ENTIRE UNIT:	ROTARY VALVE ONLY:

REMARKS:

9413227.0595

UNITED ENGINEERS & CONSTRUCTORS A Raytheon Company Western Operations	EQUIPMENT DATA SHEET ☒ CDR ☐ TITLE I ☐ TITLE II ☐ TITLE III	ITEM NUMBER CV-05-101	PAGE 1 OF 1

CUSTOMER & LOCATION	PROJECT	UE&C JOB NO. 6237.006	DATE: 05/19/92
DOE-RL/WHC HANFORD, WA	WRAP FACILITY MODULE 2A	ACCOUNT NO.	BY: JPJ

REVISIONS (DATE & BY)	A		B		C		D	
	E		F		G		H	

SERVICE	MANUFACTURER	NO. REQ'D.	SOURCE OF QUOTE
ADDITIVE AIR SLIDE CONVEYOR		1	

AIR SLIDE CONVEYOR

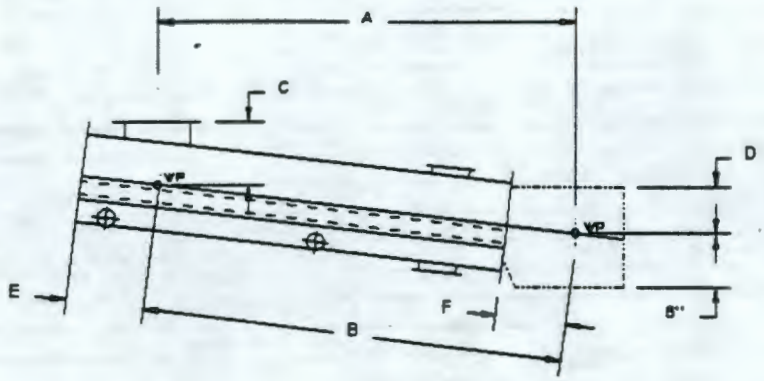

CONDITIONS OF SERVICE		DIMENSIONS	
MATERIAL: ADDITIVE (GYPSUM)		A: 20'-9"	F:
THROUGHPUT: 100 CU FT/HOUR		B: 20'-11"	G:
	MAXIMUM TEMP: 101°F	C: 7"	H:
BULK DENSITY: 70 LBS/CU FT	SLOPE: 6°	D: 2'-2"	I:
CEMA CLASS: 70 A_{100} 26M	LOCATION: OUTDOORS	E: 7"	J:
PARTICLE SIZE: MINUS 100 MESH	AIR CONSUMPTION: 150 CFM		
FLOWABILITY: FREE FLOWING	AIR PRESSURE REQ'D: 3 PSIG		
ABRASIVENESS: VERY ABRASIVE			
SPECIAL PROPERTIES: HYDROSCOPIC			
CONSTRUCTION			
INLET: 6" DIA			
OUTLET: 6" DIA			
PRODUCT CHAMBER: 11 GA MILD STEEL			
AIR CHAMBER: 11 GA MILD STEEL			
AEREATION MEDIA: 4 PLY WOVEN POLYESTER STD 200°F			
MEDIA SUPPORT: 1/8" X 1" BAR GRATING ON 1" CTRS			
	WT OF CONVEYOR: 500 LBS		

UNITED ENGINEERS & CONSTRUCTORS A Raytheon Company Western Operations	EQUIPMENT DATA SHEET ☒ CDR ☐ TITLE I ☐ TITLE II ☐ TITLE III	ITEM NUMBER CV-05-102	PAGE 1 OF 1

CUSTOMER & LOCATION	PROJECT	UE&C JOB NO. 6237.006	DATE: 06/19/92
DOE-RL/WHC HANFORD, WA	WRAP FACILITY MODULE 2A	ACCOUNT NO.	BY: JPJ

REVISIONS (DATE & BY)	A		B		C		D	
	E		F		G		H	

SERVICE	MANUFACTURER	NO. REQ'D.	SOURCE OF QUOTE
PFA AIR SLIDE CONVEYORS		1	

AIR SLIDE CONVEYOR

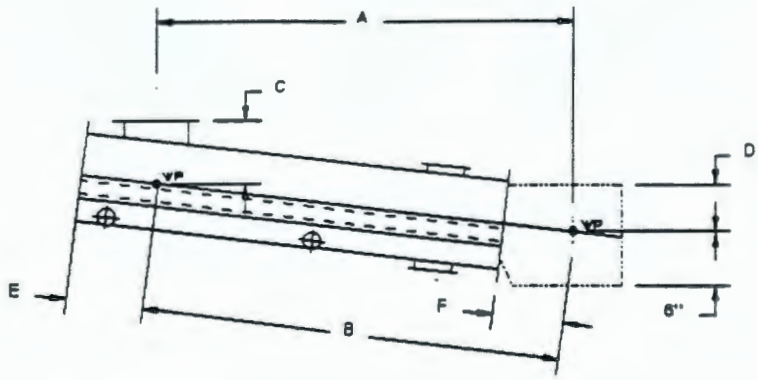

CONDITIONS OF SERVICE		DIMENSIONS	
MATERIAL: PULVERIZED FLY ASH (PFA)		A: 20'-9"	F:
THROUGHPUT: 150 CU FT/HOUR		B: 20'-11"	G:
	MAXIMUM TEMP: 101°F	C: 7"	H:
BULK DENSITY: 40 LBS/CU FT	SLOPE: 6°	D: 2'-2"	I:
CEMA CLASS: 70 A_{100} 26M	LOCATION: OUTDOORS	E: 7"	J:
PARTICLE SIZE: MINUS 100 MESH	AIR CONSUMPTION: 150 CFM		
FLOWABILITY: FREE FLOWING	AIR PRESSURE REQ'D: 3 PSIG		
ABRASIVENESS: MODERATE			
SPECIAL PROPERTIES:			
CONSTRUCTION			
INLET: 6" DIA			
OUTLET: 6" DIA			
PRODUCT CHAMBER: 11 GA MILD STEEL			
AIR CHAMBER: 11 GA MILD STEEL			
AEREATION MEDIA: 4 PLY WOVEN POLYESTER STD 200°F			
MEDIA SUPPORT: 1/8" X 1" BAR GRATING ON 1" CTRS			
	WT OF CONVEYOR: 500 LBS		

9413227.0597

UNITED ENGINEERS & CONSTRUCTORS A Raytheon Company Western Operations	EQUIPMENT DATA SHEET ☒ CDR ☐ TITLE I ☐ TITLE II ☐ TITLE III	ITEM NUMBER CV-05-103	PAGE 1 OF 1

CUSTOMER & LOCATION	PROJECT	UE&C JOB NO.	DATE:
DOE-RL/WHC HANFORD, WA	WRAP FACILITY MODULE 2A	6237.006	05/19/92
		ACCOUNT NO.	BY: JPJ

REVISIONS (DATE & BY)	A		B		C		D	
	E		F		G		H	

SERVICE	MANUFACTURER	NO. REQ'D.	SOURCE OF QUOTE
BFS AIR SLIDE CONVEYORS		1	

AIR SLIDE CONVEYOR

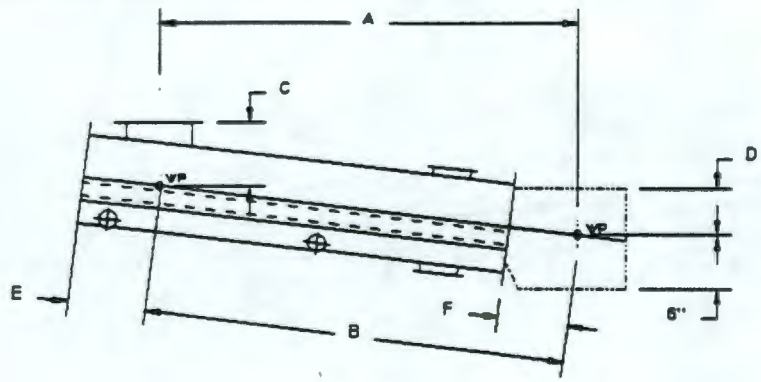

CONDITIONS OF SERVICE		DIMENSIONS	
MATERIAL: BLAST FURNACE SLAG (BFS)		A: 20'-9"	F:
THROUGHPUT: 150 CU FT/HOUR		B: 20'-11"	G:
	MAXIMUM TEMP: 101°F	C: 7"	H:
BULK DENSITY: 50 LBS/CU FT	SLOPE: 6°	D: 2'-2"	I:
CEMA CLASS: 60 D, 37	LOCATION: OUTDOORS	E: 7"	J:
PARTICLE SIZE: 1/8" MINUS	AIR CONSUMPTION: 150 CFM		
FLOWABILITY: FREE FLOWING	AIR PRESSURE REQ'D: 3 PSIG		
ABRASIVENESS: VERY ABRASIVE			
SPECIAL PROPERTIES:			
CONSTRUCTION			
INLET: 6" DIA			
OUTLET: 6" DIA			
PRODUCT CHAMBER: 11 GA MILD STEEL			
AIR CHAMBER: 11 GA MILD STEEL			
AEREATION MEDIA: 4 PLY WOVEN POLYESTER STD 200°F			
MEDIA SUPPORT: 1/8" X 1" BAR GRATING ON 1" CTRS			
	WT OF CONVEYOR: 500 LBS		

UNITED ENGINEERS & CONSTRUCTORS A Raytheon Company Western Operations	EQUIPMENT DATA SHEET ☒ CDR ☐ TITLE I ☐ TITLE II ☐ TITLE III	ITEM NUMBER CV-05-104	PAGE 1 OF 1

CUSTOMER & LOCATION	PROJECT	UE&C JOB NO. 6237.006	DATE: 06/19/92
DOE-RL/WHC HANFORD, WA	WRAP FACILITY MODULE 2A	ACCOUNT NO.	BY: JPJ

REVISIONS (DATE & BY)	A		B		C		D	
	E		F		G		H	

SERVICE	MANUFACTURER	NO. REQ'D.	SOURCE OF QUOTE
OPC AIR SLIDE CONVEYOR		1	

AIR SLIDE CONVEYOR

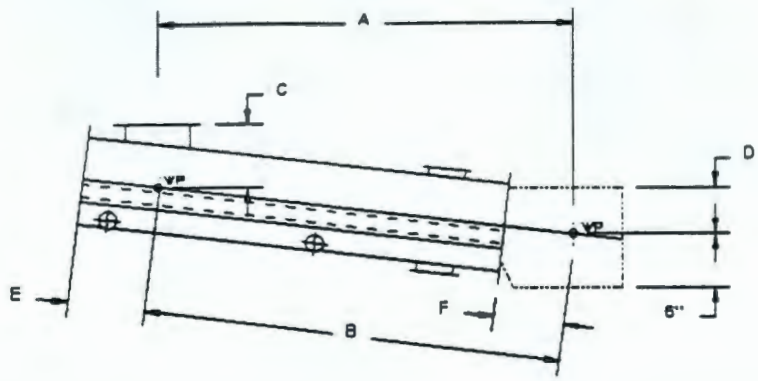

CONDITIONS OF SERVICE		DIMENSIONS	
MATERIAL: ORDINARY PORTLAND CEMENT (OPC)		A: 20'-9"	F:
THROUGHPUT: 100 CU FT/HOUR		B: 20'-11"	G:
	MAXIMUM TEMP: 101°F	C: 7"	H:
BULK DENSITY: 80 LBS/CU FT	SLOPE: 6°	D: 2'-2"	I:
CEMA CLASS: 80 A_{100} 26M	LOCATION: OUTDOORS	E: 7"	J:
PARTICLE SIZE: MINUS 100 MESH	AIR CONSUMPTION: 150 CFM		
FLOWABILITY: FREE FLOWING	AIR PRESSURE REQ'D: 3 PSIG		
ABRASIVENESS: MODERATELY			
SPECIAL PROPERTIES:			
CONSTRUCTION			
INLET: 6" DIA			
OUTLET: 6" DIA			
PRODUCT CHAMBER: 11 GA MILD STEEL			
AIR CHAMBER: 11 GA MILD STEEL			
AEREATION MEDIA: 4 PLY WOVEN POLYESTER STD 200°F			
MEDIA SUPPORT: 1/8" X 1" BAR GRATING ON 1" CTRS			
	WT OF CONVEYOR: 500 LBS		

9413227.0599

UNITED ENGINEERS & CONSTRUCTORS A Raytheon Company Western Operations	EQUIPMENT DATA SHEET ☒ CDR ☐ TITLE I ☐ TITLE II ☐ TITLE III	ITEM NUMBER CV-05-202	PAGE 1 OF 1

CUSTOMER & LOCATION	PROJECT	UE&C JOB NO. 6237.006	DATE: 04/20/92
DOE-RL/WHC HANFORD, WA	WRAP FACILITY MODULE 2A	ACCOUNT NO.	BY: JPJ

REVISIONS (DATE & BY)	A		B		C		D	
	E		F		G		H	

SERVICE	MANUFACTURER	NO. REQ'D.	SOURCE OF QUOTE
OPC BATCH SCREW CONVEYOR		1	

SCREW CONVEYOR

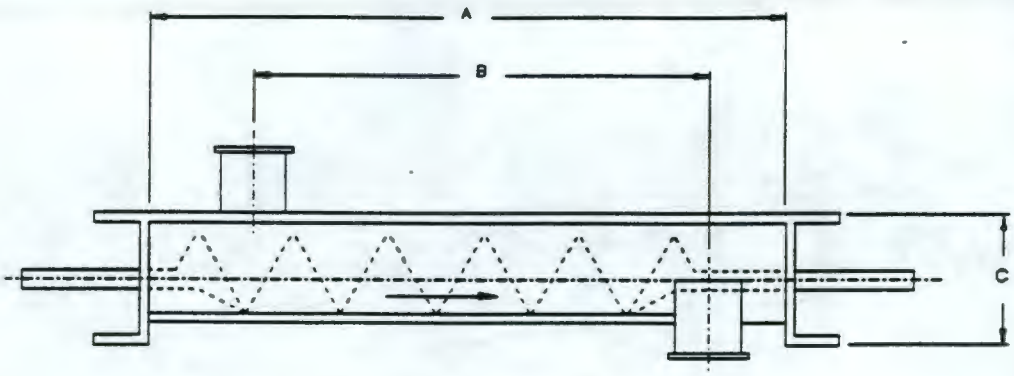

CONDITIONS OF SERVICE		DIMENSIONS	
MATERIAL: ORDINARY PORTLAND CEMENT (OPC)		A: 10'-3"	F:
THROUGHPUT: 36 CU FT/HOUR		B: 9'-0"	G:
SCREW DIAMATER: 6"	MAXIMUM TEMP: 101°F	C: 10'-1/8"	H:
BULK DENSITY: 80 LBS/CU FT	TROUGH LOADING: 30%	D:	I:
CEMA CLASS: 80 A_{126} 26M	LOCATION: INDOORS	E:	J:
PARTICLE SIZE: MINUS 100 MESH			
FLOWABILITY: FREE FLOWING			
ABRASIVENESS: MILDLY ABRASIVE			
SPECIAL PROPERTIES: AERATES & BECOMES FLUID			
CONSTRUCTION			
INLET: 7" DIA	SCREW FLIGHT MODS: NONE		
OUTLET: 7" DIA	TROUGH COVER: 14 GA SEMIFLANGED		
FLIGHTING TYPE: HELICOID			
SCREW TROUGH: STANDARD "U"	REDUCER TYPE: SCREW CONVEYOR		
TROUGH END BEARINGS: STANDARD BALL	MOTOR TYPE: ELECTRIC		
TROUGH END SEAL: SPLIT GLAND			
	WT OF SCREW CONVEYOR:		
	WT OF SCREW CONVEYOR DRIVE:		

UNITED ENGINEERS & CONSTRUCTORS A Raytheon Company Western Operations	EQUIPMENT DATA SHEET ☒ CDR ☐ TITLE I ☐ TITLE II ☐ TITLE III	ITEM NUMBER CV-06-204	PAGE 1 OF 1

CUSTOMER & LOCATION	PROJECT	UE&C JOB NO. 6237.006	DATE: 04/20/92
DOE-RL/WHC HANFORD, WA	WRAP FACILITY MODULE 2A	ACCOUNT NO.	BY: JPJ

REVISIONS (DATE & BY)	A		B		C		D	
	E		F		G		H	

SERVICE	MANUFACTURER	NO. REQ'D.	SOURCE OF QUOTE
BFS BATCH SCREW CONVEYOR		1	

SCREW CONVEYOR

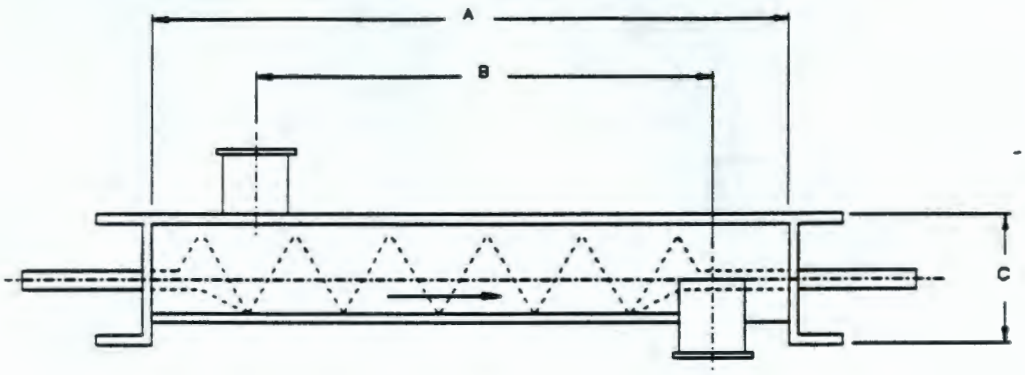

CONDITIONS OF SERVICE		DIMENSIONS	
MATERIAL: BLAST FURNACE SLAG (BFS)		A: 10'-3"	F:
THROUGHPUT: 60 CU FT/HOUR		B: 9'-0"	G:
SCREW DIAMATER: 9"	MAXIMUM TEMP: 101°F	C: 1'-2"	H:
BULK DENSITY: 60 PSF	TROUGH LOADING: 30%	D:	I:
CEMA CLASS: 60 D, 37M	LOCATION: INDOORS	E:	J:
PARTICLE SIZE: 1/8" X 100 MESH			
FLOWABILITY: FREE FLOWING			
ABRASIVENESS: VERY ABRASIVE			
SPECIAL PROPERTIES:			
CONSTRUCTION			
INLET: 10" DIA			
OUTLET: 10" DIA	SCREW FLIGHT MODS: NONE		
FLIGHTING TYPE: HELICOID	TROUGH COVER: 14 GA SEMIFLANGED		
SCREW TROUGH: STANDARD "U"			
TROUGH END BEARINGS: STANDARD BALL	REDUCER TYPE: SCREW CONVEYOR		
TROUGH END SEAL: SPLIT GLAND	MOTOR TYPE: ELECTRIC		
	WT OF SCREW CONVEYOR:		

9113227.0601

UNITED ENGINEERS & CONSTRUCTORS A Raytheon Company Western Operations	EQUIPMENT DATA SHEET ☒ CDR ☐ TITLE I ☐ TITLE II ☐ TITLE III	ITEM NUMBER CV-05-205	PAGE 1 OF 1

CUSTOMER & LOCATION	PROJECT	UE&C JOB NO. 6237.006	DATE: 04/20/92
DOE-RL/WHC HANFORD, WA	WRAP FACILITY MODULE 2A	ACCOUNT NO.	BY: JPJ

REVISIONS (DATE & BY)	A		B		C		D	
	E		F		G		H	

SERVICE	MANUFACTURER	NO. REQ'D.	SOURCE OF QUOTE
BFS SCREW CONVEYOR		1	

SCREW CONVEYOR

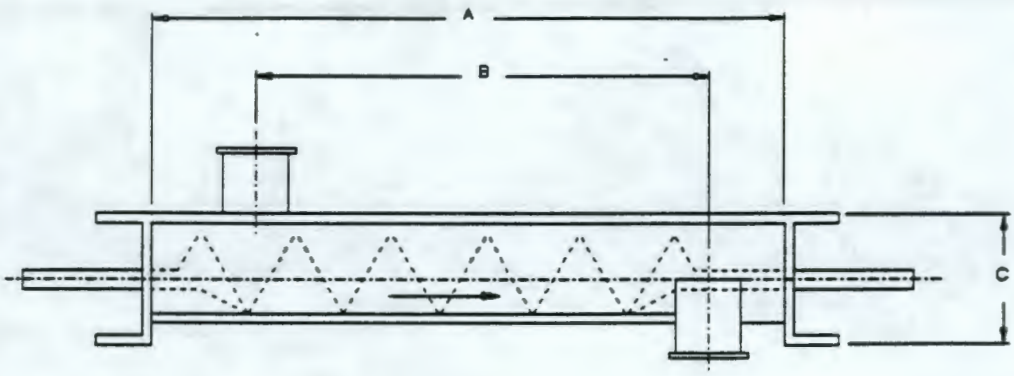

CONDITIONS OF SERVICE		DIMENSIONS	
MATERIAL: BLAST FURNACE SLAG (BFS)		A: 10'-3"	F:
THROUGHPUT: 36 CU FT/HOUR		B: 9'-0"	G:
SCREW DIAMATER: 6"	MAXIMUM TEMP: 101°F	C: 10'-1/8"	H:
BULK DENSITY: 60 LBS/CU FT	TROUGH LOADING: 30%	D:	I:
CEMA CLASS: 60 D, 37M	LOCATION: INDOORS	E:	J:
PARTICLE SIZE: 1/8" X 100 MESH			
FLOWABILITY: FREE FLOWING			
ABRASIVENESS: VERY ABRASIVE			
SPECIAL PROPERTIES:			
CONSTRUCTION			
INLET: 7" DIA			
OUTLET: 7" DIA	SCREW FLIGHT MODS: NONE		
FLIGHTING TYPE: HELICOID	TROUGH COVER: 14 GA SEMIFLANGED		
SCREW TROUGH: STANDARD "U"			
TROUGH END BEARINGS: STANDARD BALL	REDUCER TYPE: SCREW CONVEYOR		
TROUGH END SEAL: SPLIT GLAND	MOTOR TYPE: ELECTRIC		
	WT OF SCREW CONVEYOR:		
	WT OF SCREW CONVEYOR DRIVE:		

UNITED ENGINEERS & CONSTRUCTORS A Raytheon Company Western Operations	EQUIPMENT DATA SHEET ☒ CDR ☐ TITLE I ☐ TITLE II ☐ TITLE III	ITEM NUMBER CV-05-206	PAGE 1 OF 1
CUSTOMER & LOCATION DOE-RL/WHC HANFORD, WA	PROJECT WRAP FACILITY MODULE 2A	UE&C JOB NO. 6237.006	DATE: 04/20/92
		ACCOUNT NO.	BY: JPJ

REVISIONS (DATE & BY)	A		B		C		D	
	E		F		G		H	

SERVICE	MANUFACTURER	NO. REQ'D.	SOURCE OF QUOTE
PFA SCREW CONVEYOR		1	

SCREW CONVEYOR

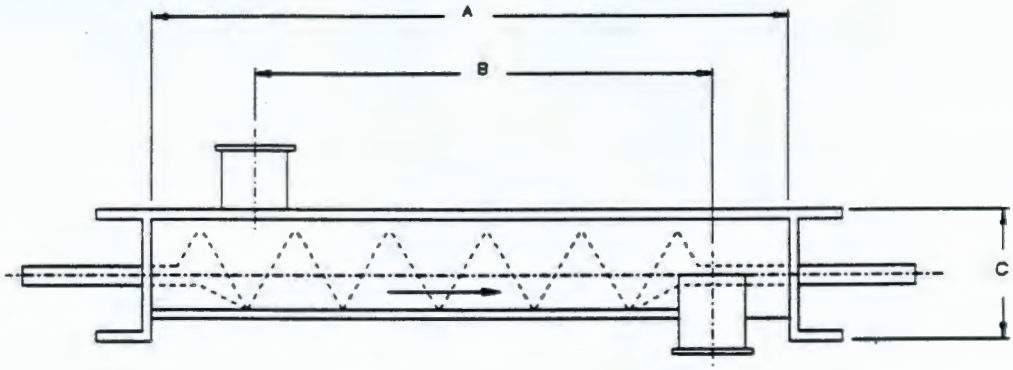

CONDITIONS OF SERVICE		DIMENSIONS	
MATERIAL: PULVERIZED FLY ASH (PFA)		A: 10'-3"	F:
THROUGHPUT: 90 CU FT/HOUR		B: 9'-0"	G:
SCREW DIAMATER: 9"	MAXIMUM TEMP: 101°F	C: 1'-2"	H:
BULK DENSITY: 40 LBS/CU FT	TROUGH LOADING: 30%	D:	I:
CEMA CLASS: 40 A_{100} 25M	LOCATION: INDOORS	E:	J:
PARTICLE SIZE: MINUS 100 MESH			
FLOWABILITY: VERY FREE FLOWING			
ABRASIVENESS: VERY ABRASIVE			
SPECIAL PROPERTIES: AERATES & BECOMES FLUID			
CONSTRUCTION			
INLET: 10" DIA			
OUTLET: 10" DIA	SCREW FLIGHT MODS: NONE		
FLIGHTING TYPE: HELICOID	TROUGH COVER: 14 GA SEMIFLANGED		
SCREW TROUGH: STANDARD "U"			
TROUGH END BEARINGS: STANDARD BALL	REDUCER TYPE: SCREW CONVEYOR		
TROUGH END SEAL: SPLIT GLAND	MOTOR TYPE: ELECTRIC		
	WT OF SCREW CONVEYOR:		

9413227.0603

UNITED ENGINEERS & CONSTRUCTORS A Raytheon Company Western Operations	EQUIPMENT DATA SHEET ☒ CDR ☐ TITLE I ☐ TITLE II ☐ TITLE III	ITEM NUMBER CV-05-208	PAGE 1 OF 1

CUSTOMER & LOCATION	PROJECT	UE&C JOB NO. 6237.006	DATE: 04/20/92
DOE-RL/WHC HANFORD, WA	WRAP FACILITY MODULE 2A	ACCOUNT NO.	BY: JPJ

REVISIONS (DATE & BY)	A		B		C		D	
	E		F		G		H	

SERVICE	MANUFACTURER	NO. REQ'D.	SOURCE OF QUOTE
BLENDED POWDER SCREW CONVEYOR		1	

SCREW CONVEYOR

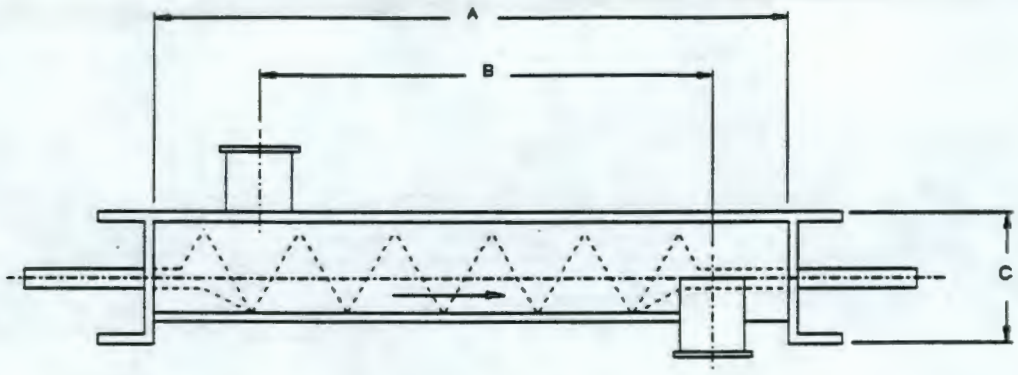

CONDITIONS OF SERVICE		DIMENSIONS	
MATERIAL: BLENDED POWDER (3:1, BFS:OPC)		A: 10'-3"	F:
THROUGHPUT: 42 CU FT/HOUR		B: 9'-0"	G:
SCREW DIAMATER: 6"	MAXIMUM TEMP: 101°F	C: 10'-1/8"	H:
BULK DENSITY: 65 LBS/CU FT	TROUGH LOADING: 30%	D:	I:
CEMA CLASS: 65 D, 37M	LOCATION: INDOORS	E:	J:
PARTICLE SIZE: 1/8" X 100 MESH			
FLOWABILITY: FREE FLOWING			
ABRASIVENESS: VERY ABRASIVE			
SPECIAL PROPERTIES: AERATES & BECOMES FLUID			
CONSTRUCTION			
INLET: 7" DIA			
OUTLET: 7" DIA	SCREW FLIGHT MODS: NONE		
FLIGHTING TYPE: HELICOID	TROUGH COVER: 14 GA SEMIFLANGED		
SCREW TROUGH: STANDARD "U"			
TROUGH END BEARINGS: STANDARD BALL	REDUCER TYPE: SCREW CONVEYOR		
TROUGH END SEAL: SPLIT GLAND	MOTOR TYPE: ELECTRIC		
	WT OF SCREW CONVEYOR:		
	WT OF SCREW CONVEYOR DRIVE:		
	TOTAL:		

UNITED ENGINEERS & CONSTRUCTORS A Raytheon Company Western Operations	EQUIPMENT DATA SHEET ☒ CDR ☐ TITLE I ☐ TITLE II ☐ TITLE III	ITEM NUMBER CV-05-209	PAGE 1 OF 1

CUSTOMER & LOCATION	PROJECT	UE&C JOB NO. 6237.006	DATE: 04/20/92
DOE-RL/WHC HANFORD, WA	WRAP FACILITY MODULE 2A	ACCOUNT NO.	BY: JPJ

REVISIONS (DATE & BY)	A		B		C		D	
	E		F		G		H	

SERVICE	MANUFACTURER	NO. REQ'D.	SOURCE OF QUOTE
OPC SCREW CONVEYOR		1	

SCREW CONVEYOR

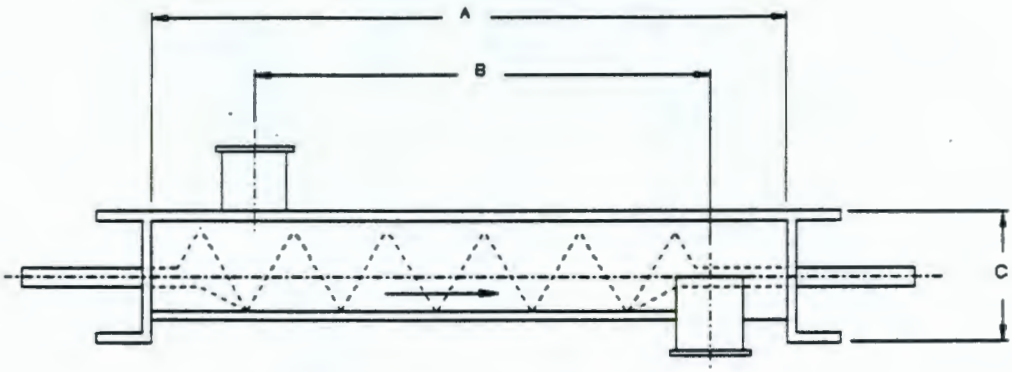

CONDITIONS OF SERVICE		DIMENSIONS	
MATERIAL: ORDINARY PORTLAND CEMENT (OPC)		A: 10'-3"	F:
THROUGHPUT: 36 CU FT/HOUR		B: 9'-0"	G:
SCREW DIAMATER: 6"	MAXIMUM TEMP: 101°F	C: 10'-1/8"	H:
BULK DENSITY: 80 LBS/CU FT	TROUGH LOADING: 30%	D:	I:
CEMA CLASS: 80 A_{100} 26M	LOCATION: INDOORS	E:	J:
PARTICLE SIZE: MINUS 100 MESH			
FLOWABILITY: FREE FLOWING			
ABRASIVENESS: MILDLY ABRASIVE			
SPECIAL PROPERTIES: AERATES & BECOMES FLUID			
CONSTRUCTION			
INLET: 7" DIA			
OUTLET: 7" DIA	SCREW FLIGHT MODS: NONE		
FLIGHTING TYPE: HELICOID	TROUGH COVER: 14 GA SEMIFLANGED		
SCREW TROUGH: STANDARD "U"			
TROUGH END BEARINGS: STANDARD BALL	REDUCER TYPE: SCREW CONVEYOR		
TROUGH END SEAL: SPLIT GLAND	MOTOR TYPE: ELECTRIC		
	WT OF SCREW CONVEYOR:		
	WT OF SCREW CONVEYOR DRIVE:		
	TOTAL:		

9413227.0605

UNITED ENGINEERS & CONSTRUCTORS A Raytheon Company Western Operations	EQUIPMENT DATA SHEET ☒ CDR ☐ TITLE I ☐ TITLE II ☐ TITLE III	ITEM NUMBER CV-05-211	PAGE 1 OF 1

CUSTOMER & LOCATION	PROJECT	UE&C JOB NO. 6237.006	DATE: 04/20/92
DOE-RL/WHC HANFORD, WA	WRAP FACILITY MODULE 2A	ACCOUNT NO.	BY: JPJ

REVISIONS (DATE & BY)	A		B		C		D	
	E		F		G		H	

SERVICE	MANUFACTURER	NO. REQ'D.	SOURCE OF QUOTE
PFA BATCH SCREW CONVEYOR		1	

SCREW CONVEYOR

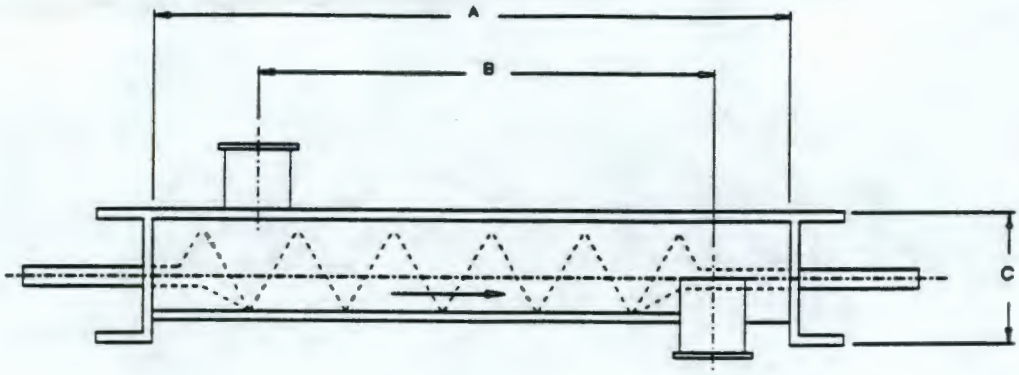

CONDITIONS OF SERVICE		DIMENSIONS	
MATERIAL: PULVERIZED FLY ASH (PFA)		A: 10'-3"	F:
THROUGHPUT: 72 CU FT/HOUR		B: 9'-0"	G:
SCREW DIAMATER: 9"	MAXIMUM TEMP: 101°F	C: 1'-2"	H:
BULK DENSITY: 40 LBS/CU FT	TROUGH LOADING: 30%	D:	I:
CEMA CLASS: 40 A_{100} 25M	LOCATION: INDOORS	E:	J:
PARTICLE SIZE: MINUS 100 MESH			
FLOWABILITY: VERY FREE FLOWING			
ABRASIVENESS: VERY ABRASIVE			
SPECIAL PROPERTIES: AERATES & BECOMES FLUID			
CONSTRUCTION			
INLET: 10" DIA			
OUTLET: 10" DIA	SCREW FLIGHT MODS: NONE		
FLIGHTING TYPE: HELICOID	TROUGH COVER: 14 GA SEMIFLANGED		
SCREW TROUGH: STANDARD "U"			
TROUGH END BEARINGS: STANDARD BALL	REDUCER TYPE: SCREW CONVEYOR		
TROUGH END SEAL: SPLIT GLAND	MOTOR TYPE: ELECTRIC		
	WT OF SCREW CONVEYOR:		
	WT OF SCREW CONVEYOR DRIVE:		
	TOTAL:		

UNITED ENGINEERS & CONSTRUCTORS A Raytheon Company Western Operations	EQUIPMENT DATA SHEET ☒ CDR ☐ TITLE I ☐ TITLE II ☐ TITLE III	ITEM NUMBER P-05-102	PAGE 1 OF 1
CUSTOMER & LOCATION: DOE-RL/WHC HANFORD, WA	PROJECT: WRAP FACILITY MODULE 2A	UE&C JOB NO. 6237.006	DATE: 05/15/92
		ACCOUNT NO.	BY: SMM

REVISIONS (DATE & BY)	A		B		C		D	
	E		F		G		H	

SERVICE	MANUFACTURER	SOURCE OF QUOTE

NO. PUMPS REQ'D: 1	SIZE & TYPE: PHEUMATIC SENSE PHASE PUMP		NO. OF STAGES: 1		
NO. MOTORS REQ'D:	ITEM NO.:	PROVIDED BY:	MTD BY:	REF. PAGE:	
NO. TURBINES REQ'D:	ITEM NO.:	PROVIDED BY:	MTD BY:	REF. PAGE:	

CONDITIONS OF SERVICE, EACH PUMP

SOLIDS (POWDER): ORDINARY PORTLAND CEMENT (AND RELATED POWDER)					
: 100 ACFM	RATED:	DISCH. PRESS: PSIG			
PT °F RATED:	MAX.	SUCT. PRESS. PSIG:	MAX.	RATED	
SP GR. AT RATED PT.: 80 LBS/CU FT	DIFF. PRES. PSI:				
VAP. PRESS. AT RATED P. PSIA:	DIFF. HEAD. FT:				
VIS. AT RATED: ☐ PT. ☐ CP:	NPSHA. FT:				
CORR/EROS. CAUSED BY: BLAST FURNACE SLAG	CORR ALLOW.:				
COLD START TEMP °F:	SP GR:	& VIS:			

PERFORMANCE

PROPOSAL CURVE NO.:	
RPM:	NPSHR (WATER) (H.C.)
EFF.:	BHP RATED:
MAX. BHP RATED IMP:	
MAX. HEAD RATED IMP: 30 FT	
MIN. CONTINUOUS GPM:	
ROTATION (VIEWED FROM CPLG END):	
COLD START GHP:	

CONSTRUCTION

NOZZLES	SIZE	RATING	FACINGS	LOCATION
SUCTION				
DISCHARGE				

CASE-MOUNT	☐ CENTERLINE	☐ FOOT	☐ BRACKET	☐ VERT (TYPE)
CASE-SPLIT	☐ AXIAL	☐ RADIAL	TYPE SUCTION	☐ SGL ☐ DBL
CASE-PRESSURE	MAX. ALLOW: PSIG CF	HYDRO TEST: PSIG		
CASE-CONNECT	☐ VENT	☐ DRAIN	☐ GAGE	
IMPELLER DIA.	RATED:	MAX.:	MIN.:	TYPE:
IMPELLER MOUNT	☐ BETWEEN BRGS	☐ OVERHUNG		
BEARING-TYPE	RADIAL:	THRUST:		
LUBRICATION	☐ RING OIL ☐ FLOOD ☐ OIL MIST ☐ FLINGER ☐ PRESSURE ☐ GREASE			
COUPLING	MFR	MODEL	☐ GUARD	
DRIVER HALF MTD BY	☐ PUMP MFR.	☐ DRIVER MFR.	☐ PURCHASER	
PACKING	MFR. & TYPE:	SIZE/NO OF RINGS:		
MECH SEAL	MFR. & MODEL:	API CLASS. CODE:		
	MFR. CODE:			

SHOP TESTS

☐ NON-WIT. PERF. ☐ WIT. PERF.
☐ NON-WIT. HYDRO ☐ WIT. HYDRO
☐ NPSH REQ'D. ☐ WIT. NPSH
☐ SHOP INSPECTION
☐ DISMANT. & INSP. AFTER TEST
☐ OTHER

MATERIALS

PUMP: CASE/TRIM CLASS:

BASEPLATE:

AUXILIARIES

C.W. PIPE PLAN API 610	☐ CU	☐ SS	☐ CS	☐ TUBING	☐ PIPE BY
TOTAL COOLING WATER	OF	PSIG	MAX A T	☐ SIGHT F 1 REQ'D	
PACKING COOLING INJECTION REQ'D	TOTAL GPM	PSIG			
SEAL FLUSH PLAN API 610	☐ CS	☐ SS	☐ TUBING	☐ PIPE BY	
EXTERNAL SEAL FLUSH FLUID	GPM	PSIG			
AUXILIARY SEAL PLAN API 610	☐ CS	☐ SS	☐ TUBING	☐ PIPE BY	
AUX SEAL QUENCH FLUID:					

VERTICAL PUMPS

PIT OR SLUMP DEPTH:

MIN. SUBMERGENCE REQ'D:

COLUMN	☐	☐ THREADED
LINE SHAFT	☐ OPEN	☐ ENCLOSED
BRGS	BOWL	LINE SHAFT
BRG. LUBE	☐ PUMP FLUID	☐ OIL ☐ GREASE
☐ STRAINER		

MOTOR DRIVER

HP: 0.25	RPM:	FRAME:	VOLTS/PHASE/HZ:
MFR:	TYPE: SQUIRREL GAGE INDUCTION	NEMA DESIGN	
ENCLOSURE:	RATED AMBIENT TEMP 40° C	INSUL. CLASS	
ELEVATION: FT	FULL LOAD AMPS	SPACE HEATERS	

PUMP THRUST: LB UP DOWN

LENGTH BELOW MOUNTING FLANGE:

APPROXIMATE WEIGHTS	PUMP & BASE	MOTOR:	GEAR:	TURBINE:

CODE REQUIREMENTS & SPECS:

REMARKS:

UNITED ENGINEERS & CONSTRUCTORS A Raytheon Company Western Operations	EQUIPMENT DATA SHEET ☒ CDR ☐ TITLE I ☐ TITLE II ☐ TITLE III	ITEM NUMBER S-04-101A,B	PAGE 1 OF 1
CUSTOMER & LOCATION DOE-RL/WHC HANFORD, WA	PROJECT WRAP FACILITY MODULE 2A	UE&C JOB NO. 6237.006	DATE: 05/01/92
		ACCOUNT NO.	BY: KDV

REVISIONS (DATE & BY)	A		B		C		D	
	E		F		G		H	

SERVICE	MANUFACTURER	NO. REQ'D	SOURCE OF QUOTE
SIZE REDUCTION OFF-GAS DUST COLLECTOR		2	

TYPE & MODEL:

CONDITIONS OF SERVICE

DUST OR MATERIAL HANDLED: FUGITIVE DUST FROM SHREDDING ACTIVITIES, FUG MILL 7 BOX BREAKDOWN ACTIVITIES

MATERIAL MASS FLOW RATE: UNDEFINED LB./HR.

MATERIAL BULK DENSITY: UNDEFINED LB./CU.FT.

MATERIAL CHARACTERISTICS: ☒ DRY ☒ ALKALINE ☒ NEUTRAL ☒ SPARKS ☐ DAMP ☐ ACID ☒ ABRASIVE ☒ TOXIC

CONVEYING MEDIUM: TYPE FLUID: AIR; FLOW 1,000 ACFM; TEMPERATURE: 60°F; RELATIVE HUMIDITY: 50%

MATERIAL CONCENTRATION: UNDEFINED GR./CU.FT.; MINIMUM EXPLOSIVE CONCENTRATION: N/A OZ./CU.FT.

LIMITING O_2 CONCENTRATION: N/A %; INLET PRESSURE: 0 TO -15" W.C. (PSIA)("H_2OABS)

TEMPERATURE OF DUST LADEN GAS AT DUST POINTS: 60°F

LOCATION: ☒ INDOORS ☐ OUTDOORS; ALTITUDE: 400 FT.

SERVICE: ☒ CONTINUOUS ☐ INTERMITTENT ☐ DUST RECOVERY ☒ DUST REMOVAL

DUST MATERIAL DISCHARGED TO: DRUMS (NOTE 2)

CONSTRUCTION & SPECIFICATIONS

MATERIALS OF CONSTRUCTION: DUST SIDE: ; CLEAN SIDE PLENUM: ; BAG FELT: DACRON ; BAG CAGES:

DESIGN PRESSURE: ± 20" W.C. PSIG; DESIGN TEMPERATURE: 150°F

SHELL THICKNESS: IN.; TOP THICKNESS: IN.

DUST DISPOSAL: ☒ COLLECTOR WITH MATERIAL HOPPER ☐ COLLECTOR WITH BIN VENT & MOUNTING FLANGE ☐ MECHANICAL SHAKER TYPE ☒ REVERSE JET BLOWDOWN TYPE OTHER:

INLET CONN. SIZE: RATING: LOCATION:

GAS DISCH. CONN. SIZE: RATING: LOCATION:

DUST DISCH. SIZE: RATING: LOCATION:

DISCH. VALVE: ☒ ROTARY VALVE-REF. PAGE: ☐ SLIDE GATE ☒ VENDOR SUPPLIED ☐ PURCHASER SUPPLIED

PRESSURE DROP (INLET-GAS DISCH.) NORMAL: (PSI)("H_2O), MAXIMUM: (PSI)("H_2O)

PRESSURE DROP (DUST SIDE-PLENUM) NORMAL: (PSI)("H_2O), MAXIMUM: (PSI)("H_2O)

FILTRATION EFFICIENCY: %; NO. OF BAGS: 76; LENGTH: 8'-0"; DIA: 6"

FILTER SURFACE AREA: 950 SQ. FT.; FILTER RATIO: 3.95 CFM/SQ. FT.

GAS VELOCITY THROUGH COLLECTOR: FPS; DUST HOPPER CAPACITY: CU.FT.

AIR PRESSURE AVAILABLE: 125 PSIG; ELEC. AVAIL: ☐ DC ☒ AC; VOLT/PHASE/HERTZ: / /

HIGH LEVEL IND. TYPE: ☐ VENDOR SUPPLIES ☐ PURCHASER SUPPLIED

PILOT VALVES MFG: TYPE: ENCLOSURE:

TIMER MFG: TYPE: ENCLOSURE:

OVERALL SIZE DIA: 6'-10" X10'-2" (STRAIGHT SIZE) HEIGHT: 21'-0" (NOTE 1)

REMARKS:
1. HEIGHT OF 21'-0" BASED ON OUTLET OF ROTARY DISCHARGE VALVE AT 4'-4".
2. FLEXIBLE HOSE AND CLAMP-ON DRUM LID WITH DUST SEAL (CONNECTED TO ROTARY DICHARGE VALVE) TO BE SUPPLIED BY VENDOR.
3. WEIGHT: 4,830 LBS

SECTION 14592

94/3227.0609

THIS PAGE INTENTIONALLY
LEFT BLANK

THIS PAGE INTENTIONALLY
LEFT BLANK

WRAP MODULE 2A

SPECIFICATION SECTION
FOR
14592 DRUM PUSHER

TABLE OF CONTENTS

PART 1 GENERAL

1.01 SECTION SCOPE
1.02 RELATED SECTIONS
1.03 REFERENCES
1.04 SYSTEM DESCRIPTION
1.05 SUBMITTALS
1.06 DELIVERY, STORAGE AND HANDLING
1.07 SITE CONDITIONS

PART 2 PRODUCTS

2.01 MANUFACTURERS
2.02 MATERIALS
2.03 EQUIPMENT
2.04 COMPONENTS
2.05 FABRICATION
2.06 SHOP QUALITY CONTROL

PART 3 EXECUTION

3.01 PREPARATION
3.02 ERECTION, INSTALLATION AND APPLICATION
3.03 FIELD QUALITY CONTROL
3.04 ADJUSTING AND CLEANING
3.05 DEMONSTRATION
3.06 PROTECTION

APPENDIX

APPENDIX A DATA SHEETS

94 3227.0610

WRAP MODULE 2A

SECTION 14592

DRUM PUSHER

PART 1 GENERAL

1.01 SECTION SCOPE

A. This specification establishes the requirements for detailed design, fabrication, installation, start-up, and acceptance testing of drum pushing equipment within enclosures of WRAP 2A.

1.02 RELATED SECTIONS

1.03 REFERENCES

A. American Iron and Steel Institute (AISI)

B. American National Standards Institute (ANSI)

C. American Society of Testing and Materials (ASTM)

D. National Electric Code (NEC)

E. American Welding Society (AWS)
AWS D1.1 "Structural Welding Code"

F. National Electric Manufacturers Association (NEMA)
NEMA MG-1 Motors and Generators

1.04 SYSTEM DESCRIPTION

A. The drum pusher allows horizontal transportation of drum within process enclosure containment.

B. General Description

The drum pusher consists of a pair of free running roller conveyors between which is located a pneumatic rodless cylinder. When a drum has been placed at one end of the conveyors the pneumatic cylinder is actuated and provides a horizontal force which acts on the drum thus transporting the drum to the other end of the conveyor.

9413227.0611

C. Construction

1. The pneumatic rodless cylinder are constructed out of Aluminum and will operate at 80 psi.

2. The roller conveyors are constructed of carbon steel and are free rolling.

3. Both the pneumatic cylinder and roller conveyors are standard items of equipment.

D. Control and Instrumentation

1. The drum pusher will be interlocked with equipment which places and retrieves drums from the conveyor to ensure unplanned clashes between the drum and the extended pneumatic cylinder do not occur.

2. The length of travel of the pneumatic cylinder is set at a fixed distance (i.e., the cylinder stroke) and limit switches are not required to control the distance travelled.

E. Data Sheets

Equipment Tag Nos. WBS Area Location Numbers and equipment data sheets for this description are provided in **Appendix A.**

END OF SECTION

9413227.0612

WRAP MODULE 2A

APPENDIX A

EQUIPMENT/INSTRUMENT DATA SHEETS

WBS LOCATION	EQUIPMENT TAG	SERVICE
1105	CY-05-521	Shredder/Repack Enclosure
1105	CY-05-541	Pub Mill Enclosure
1106	CY-06-101	Special Waste Enclosure

9413227.0613

APRIL 1992

UE&C PROJECT NO. 6237.006

FILE NO. 14592 - A1

UNITED ENGINEERS & CONSTRUCTORS A Raytheon Company Western Operations	EQUIPMENT DATA SHEET ☒ CDR ☐ TITLE I ☐ TITLE II ☐ TITLE III	ITEM NUMBER CY-05-521	PAGE 1 OF 1

CUSTOMER & LOCATION	PROJECT	UE&C JOB NO. 6237.006	DATE: 06/12/92
DOE-RL/WHC HANFORD, WA	WRAP FACILITY MODULE 2A	ACCOUNT NO.	BY: SAS

REVISIONS (DATE & BY)	A		B		C		D	
	E		F		G		H	

SERVICE	MANUFACTURER	NO. REQ'D.	SOURCE OF QUOTE
DRUM PUSHER		1	

DRUM PUSHER DRIVE HOUSING

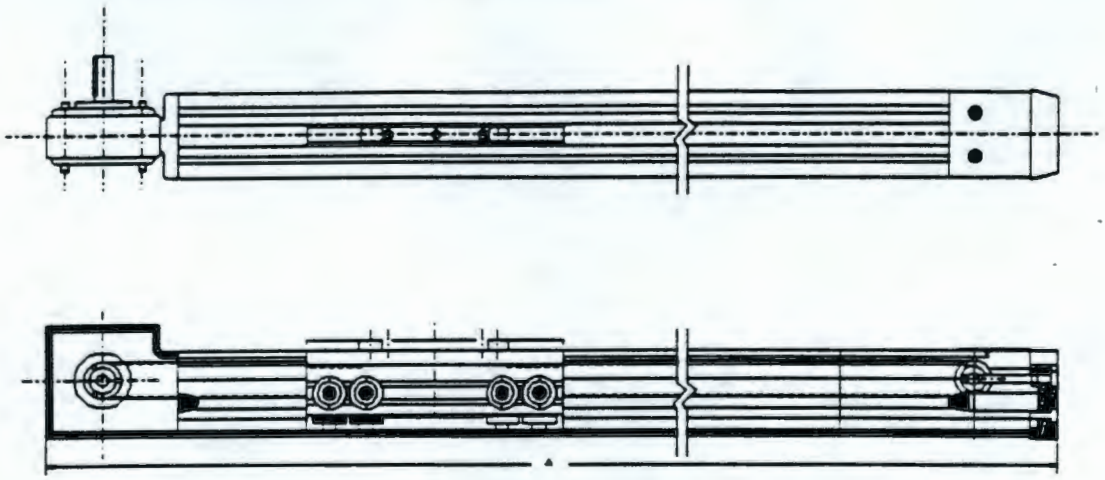

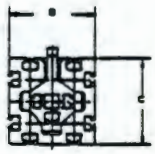

CONDITIONS OF SERVICE		DIMENSIONS	
APPLICATION: PUSHES 55 AND 85 GAL DRUMS SITTING ON ROLLER CONVEYORS FROM THE ENTER TO THE SORTING GLOVEBOX		A:	F:
UNIT LOAD DESCRIPTION: 55 AND 85 GAL DRUMS CONTAINING LLRMW		B:	G:
UNIT LOAD SIZE: 26" DIA X 39" HIGH	DUTY: 8 HOURS/DAY	C:	H:
UNIT LOAD THRUST:	NEC AREA CLASS: UNCLASSIFIED	D:	I:
LOCATION: SHREDDING AND IMPACT ENCLOSURE	SPEED: 0 TO 3"/SECOND	E:	J:
TRAVEL: 0 TO 5.5'			
UNIT LOAD WEIGHT: 3,000 LBS			
CONSTRUCTION			
DRIVE TYPE: TIMING BELT	SHIPPING WEIGHT: 33 LBS		
LOAD CAPACITY:	SPEED CAPACITY: 45'/SECOND		
TYPE OF DRIVE: ELECTRICAL	CARRIAGE SUPPORT: PLAYFREE WHEELS		
MATERIAL:	MAINTENANCE REQ.: MAINTENANCE FREE		
BELT: POLYTETRAFLUORETHYTENE W/STEEL REINFORCED WIRES	BEARINGS: SEALED BALL BEARINGS		
HOUSING: EXTRUDED ALUMINUM	LUBRICATION: GREASE		
CARRIAGE WHEELS: BELL BEARINGS COVERED W/NYLON			

9413227.0614

UNITED ENGINEERS & CONSTRUCTORS A Raytheon Company Western Operations	EQUIPMENT DATA SHEET ☒ CDR ☐ TITLE I ☐ TITLE II ☐ TITLE III	ITEM NUMBER CY-05-541	PAGE 1 OF 1

CUSTOMER & LOCATION	PROJECT	UE&C JOB NO. 6237.006	DATE: 05/13/92
DOE-RL/WHC HANFORD, WA	WRAP FACILITY MODULE 2A	ACCOUNT NO.	BY: SAS

REVISIONS (DATE & BY)	A		B		C		D	
	E		F		G		H	

SERVICE	MANUFACTURER	NO. REQ'D.	SOURCE OF QUOTE
DRUM PUSHER		1	

DRUM PUSHER DRIVE HOUSING

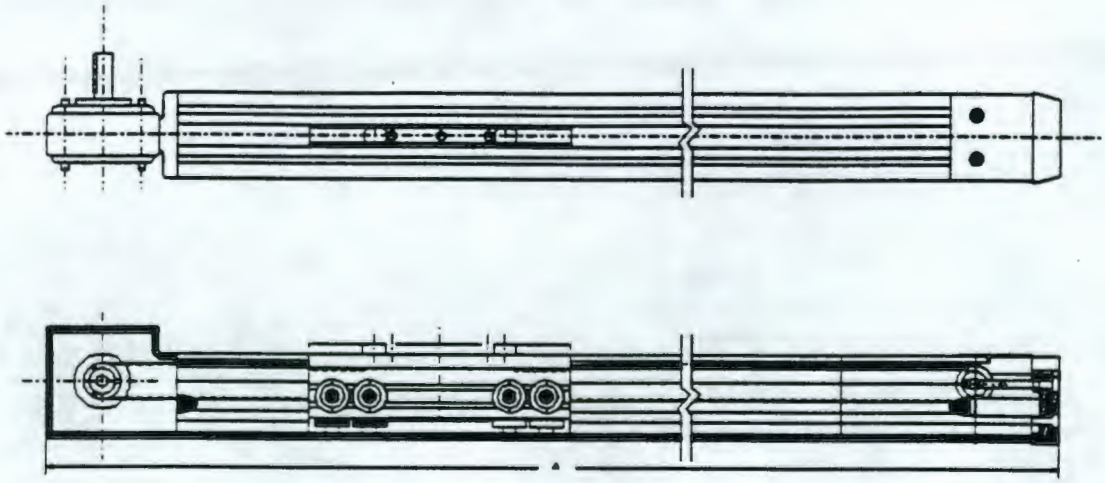

CONDITIONS OF SERVICE		DIMENSIONS	
APPLICATION: PUSHES 55 AND 85 GAL DRUMS SITTING ON ROLLER CONVEYORS FROM THE ENTER TO THE SORTING GLOVEBOX		A:	F:
UNIT LOAD DESCRIPTION: 55 AND 85 GAL DRUMS CONTAINING LLRMW		B:	G:
UNIT LOAD SIZE: 26" DIA X 39" HIGH	DUTY: 8 HOURS/DAY	C:	H:
UNIT LOAD THRUST:	NEC AREA CLASS: UNCLASSIFIED	D:	I:
LOCATION: PUG MILL ENCLOSURE	SPEED: 0 TO 3"/SECOND	E:	J:
TRAVEL: 0 TO 5.5'			
UNIT LOAD WEIGHT: 3,000 LBS			
CONSTRUCTION			
DRIVE TYPE: TIMING BELT	SHIPPING WEIGHT: 33 LBS		
LOAD CAPACITY:	SPEED CAPACITY: 45'/SECOND		
TYPE OF DRIVE: ELECTRICAL	CARRIAGE SUPPORT: PLAYFREE WHEELS		
MATERIAL:	MAINTENANCE REQ.: MAINTENANCE FREE		
BELT: POLYTETRAFLUORETHYTENE W/STEEL REINFORCED WIRES	BEARINGS: SEALED BELL BEARINGS		
HOUSING: EXTRUDED ALUMINUM	LUBRICATION: GREASE		
CARRIAGE WHEELS: BELL BEARINGS COVERED W/NYLON			

UNITED ENGINEERS & CONSTRUCTORS A Raytheon Company Western Operations	EQUIPMENT DATA SHEET ☒ CDR ☐ TITLE I ☐ TITLE II ☐ TITLE III	ITEM NUMBER CY-06-101	PAGE 1 OF 1

CUSTOMER & LOCATION	PROJECT	UE&C JOB NO. 6237.006	DATE: 06/12/92
DOE-RL/WHC HANFORD, WA	WRAP FACILITY MODULE 2A	ACCOUNT NO.	BY: GBD

REVISIONS (DATE & BY)	A		B		C		D	
	E		F		G		H	

SERVICE	MANUFACTURER	NO. REQ'D.	SOURCE OF QUOTE
REPACKED METALS DRUM PUSHER		1	

DRUM PUSHER

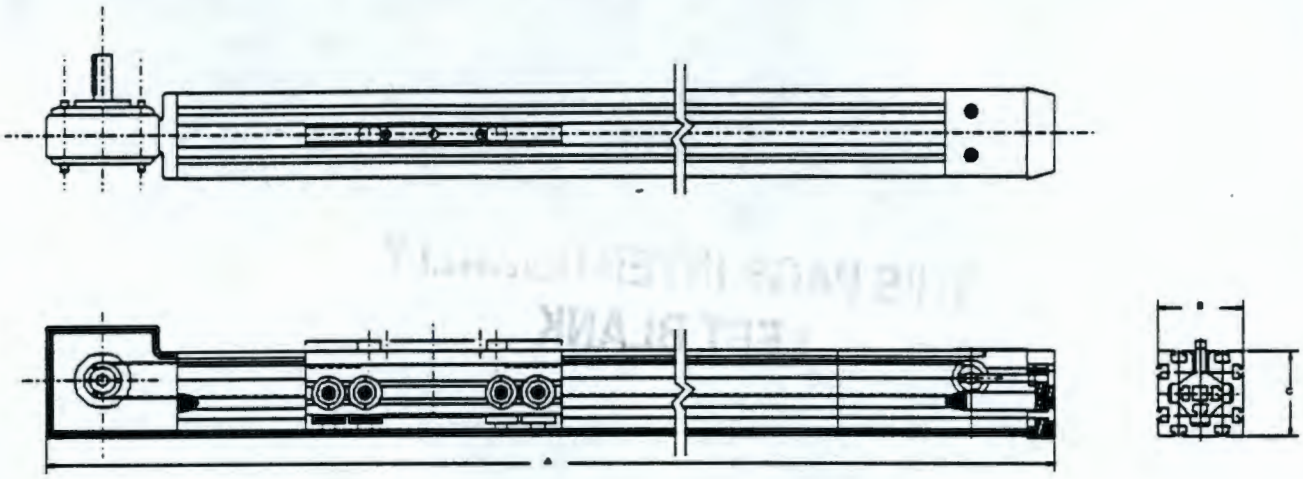

CONDITIONS OF SERVICE		DIMENSIONS	
APPLICATION: TRANSFERS 55 AND 85 GALLON DRUMS FROM ENTRY BOX TO DRUM LIFTER		A:	F:
UNIT LOAD DESCRIPTION: 55 AND 85 GAL DRUMS		B:	G:
UNIT LOAD SIZE: 26" DIA X 39" HIGH	DUTY: 8 HOURS/DAY	C:	H:
UNIT LOAD THRUST:	NEC AREA CLASS: UNCLASSIFIED	D:	I:
LOCATION: SPECIAL WASTE SHREDDER ENCLOSURE	SPEED: 0 TO 3"/SECOND	E:	J:
TRAVEL: 0 TO 5.5'			
UNIT LOAD WEIGHT: 3,000 LBS			
CONSTRUCTION			
DRIVE TYPE: PNEUMATIC CYLINDER	SHIPPING WEIGHT:		
TRANSFER MECHANISM: CONVEYOR	SPEED CAPACITY:		

9413227.0616

THIS PAGE INTENTIONALLY
LEFT BLANK

SECTION 14593

94W3227.0617

THIS PAGE INTENTIONALLY
LEFT BLANK

THIS PAGE INTENTIONALLY
LEFT BLANK

WRAP MODULE 2A

SPECIFICATION SECTION
FOR
14593 PUG MILL

TABLE OF CONTENTS

PART 1 GENERAL

1.01 SECTION SCOPE
1.02 RELATED SECTIONS
1.03 REFERENCES
1.04 SYSTEM DESCRIPTION
1.05 SUBMITTALS
1.06 DELIVERY, STORAGE AND HANDLING
1.07 SITE CONDITIONS

PART 2 PRODUCTS

2.01 MANUFACTURERS
2.02 MATERIALS
2.03 EQUIPMENT
2.04 COMPONENTS
2.05 FABRICATION
2.06 SHOP QUALITY CONTROL

PART 3 EXECUTION

3.01 PREPARATION
3.02 ERECTION, INSTALLATION AND APPLICATION
3.03 FIELD QUALITY CONTROL
3.04 ADJUSTING AND CLEANING
3.05 DEMONSTRATION
3.06 PROTECTION

APPENDIX

APPENDIX A DATA SHEETS

9HA 9227.0618

APRIL 1992 UE&C PROJECT 6237.006

FILE NO. 14593 - 1

WRAP MODULE 2A

SECTION 14593

PUG MILL

PART 1 GENERAL

1.01 SECTION SCOPE

A. This specification establishes the requirements for detailed design, fabrication, installation, start-up and acceptance testing of Pug Mill equipment within WRAP 2A.

1.02 RELATED SECTIONS

1.03 REFERENCES

A. American Iron and Steel Institute (AISI)

B. American Gear Manufacturers Association (AGM)

C. American National Standards Institute (ANSI)

D. American Society for Testing and Materials (ASTM)

E. Anti-Friction Bearing Manufacturers Association (AFBM)

F. American Welding Society (AWS)
AWS D1.1 "Structural Welding Code"

G. Mechanical Power Transmission Association (MPTA)

H. National Electric Code (NEC)

I. National Electric Manufacturers Association (NEMA)
NEMA MG-1 Motors and Generators

J. Occupational Safety and Health Administration (OSHA)

1.04 SYSTEM DESCRIPTION

A. The pug mill provides the following functions:

- Transports and meters waste into the weigh hoppers
- Homogeneous waste

AH3227.0619

B. General Description

1. Pug mills consist of an open topped longitudinal tank within which two paddle feeders rotate simultaneously to homogenize and transport waste. The pug mill drive is interconnected with the load cells of the weigh hopper with which it feeds waste such that when the desired mass of waste is loaded from the pug mill into the hopper, the pug mill drive stops and transfer of waste is stopped.

2. The pug mill will be powered by electric motors.

3. The pug mill will be mounted within a process enclosure.

C. Construction

The pug mill will be constructed of stainless steel. Motor drives for the pug mill will be mounted outside of enclosures with through wall drives to the pug mill.

D. Control and Instrumentation

1. The pug mill will be interfaced with control and safety interlocks.

2. The safety interlocks will prevent operation of the pug mill if the environmental conditions are not satisfactory.

3. The drive to the pug mill will be interfaced with the load cells of the weigh hopper with which it feeds, such that the pug mill drive stops when the required mass of waste is fed to the weigh hopper.

4. The pug mill will be controlled from the main control room.

E. Data Sheets

Equipment Tag Nos. WBS Area Location Numbers and equipment data sheets for this description are provided in **Appendix A.**

END OF SECTION

94.3227.0620

WRAP MODULE 2A

APPENDIX A

EQUIPMENT/INSTRUMENT DATA SHEETS

WBS LOCATION	EQUIPMENT TAG	SERVICE
1105	SH-05-541	Pug Mill

9413227.0621

APRIL 1992

UE&C PROJECT NO. 6237.006

FILE NO. 14593 - A1

UNITED ENGINEERS & CONSTRUCTORS A Raytheon Company Western Operations	EQUIPMENT DATA SHEET ☒ CDR ☐ TITLE I ☐ TITLE II ☐ TITLE III	ITEM NUMBER SH-05-541	PAGE 1 OF 1

CUSTOMER & LOCATION	PROJECT	UE&C JOB NO. 6237.006	DATE: 04/13/92
DOE-RL/WHC HANFORD, WA	WRAP FACILITY MODULE 2A	ACCOUNT NO.	BY: SAS

REVISIONS (DATE & BY)	A		B		C		D	
	E		F		G		H	

SERVICE	MANUFACTURER	NO. REQ'D.	SOURCE OF QUOTE
PUG MILL		1	

PUG MILL

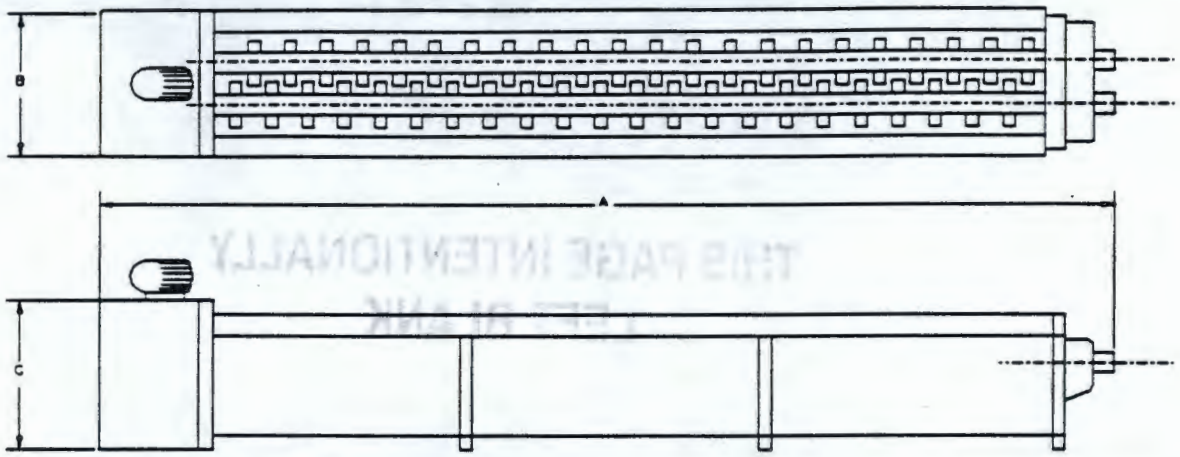

CONDITIONS OF SERVICE		DIMENSIONS	
APPLICATION: TO MIX AND METER LLRMW SLUDGES		A: 11'	F:
UNIT LOAD DESCRIPTION: LLRMW SLUDGE WASTE CONTAINED IN 55 AND 85 GALLON DRUMS		B: 20"	G:
UNIT LOAD SIZE: 11 CU FT	DUTY: 8 HOURS/DAY	C:	H:
UNIT LOAD WEIGHT: 3,000 LBS	NEL AREA CLASS: UNCLASSIFIED	D:	I:
LOCATION: PUG MILL PROCESS CONTAINMENT		E:	J:
CAPACITY: 25 CU FT/HR			

CONSTRUCTION	
MATERIAL: STAINLESS STEEL	
PUG MILL VOLUME: 12.5 CU FT	
WEIGHT: 4,500 LBS	
MOTOR RATING: 20 HP	

9413227.0622

THIS PAGE INTENTIONALLY
LEFT BLANK

SECTION 14594

9413227.0623

THIS PAGE INTENTIONALLY
LEFT BLANK

THIS PAGE INTENTIONALLY
LEFT BLANK

WRAP MODULE 2A

SPECIFICATION SECTION
FOR
14594 WASTE TRANSFER DEVICES

TABLE OF CONTENTS

PART 1 GENERAL

1.01 SECTION SCOPE
1.02 RELATED SECTIONS
1.03 REFERENCES
1.04 SYSTEM DESCRIPTION
1.05 SUBMITTALS
1.06 DELIVERY, STORAGE AND HANDLING
1.07 SITE CONDITIONS

PART 2 PRODUCTS

2.01 MANUFACTURERS
2.02 MATERIALS
2.03 EQUIPMENT
2.04 COMPONENTS
2.05 FABRICATION
2.06 SHOP QUALITY CONTROL

PART 3 EXECUTION

3.01 PREPARATION
3.02 ERECTION, INSTALLATION AND APPLICATION
3.03 FIELD QUALITY CONTROL
3.04 ADJUSTING AND CLEANING
3.05 DEMONSTRATION
3.06 PROTECTION

APPENDIX

APPENDIX A DATA SHEETS

94W3227.0624

APRIL 1992 UE&C PROJECT 6237.006

FILE NO. 14594 - 1

WRAP MODULE 2A

SECTION 14594

WASTE TRANSFER DEVICES

PART 1 GENERAL

1.01 SECTION SCOPE

A. This specification establishes the requirements for detailed design, fabrication, installation, start-up and acceptance testing of Waste transfer equipment within WRAP 2A.

1.02 RELATED SECTIONS

1.03 REFERENCES

A. American Iron and Steel Institute (AISI)

B. American National Standards Institute (ANSI)

C. American Society for Testing and Materials (ASTM)

D. National Electric Code (NEC)

E. American Welding Society (AWS)
AWS D1.1 "Structural Welding Code"

F. National Electric Manufacturers Association (NEMA)
NEMA MG-1 Motors and Generators

1.04 SYSTEM DESCRIPTION

A. Waste transfer devices provide the following functions:

1. To assist the manipulators transfer waste which is not suitable for further processing within any process line, from the process enclosure into a drum via a door system.

2. Diverting waste from one piece of equipment within a process enclosure to either of two or more pieces of equipment.

94J3227.0625

B. General Description

1. Transfer Tray: The transfer tray consists of a central vertical rod onto which is welded a series of horizontal flat trays. The central vertical rod has a lifting fixture located at the top such that it can be lifted using a hoist. The transfer tray is located within a process enclosure. Waste is placed into the tray using manipulation.

2. Diverter Tray: The diverter tray consists of an inclined plate which is mounted onto a central rotating vertical shaft the center line of which is in line with the middle of the tray at its upper end. Rotation of the shaft curves the top section of the inclined tray to rotate but not traverse laterally in a plane perpendicular to the shaft, rotation of the shaft causes the lower section of the tray to rotate in an ARC around the shaft. Waste is fed down the transfer tray by gravity. The diverter tray will be located within a process enclosure.

9413227.0626

C. Construction

The transfer tray will be constructed of painted carbon steel. The diverter tray will be constructed of stainless steel. Motor drives to the diverter tray will be mounted outside of enclosures with through wall drives to the diverter tray.

D. Control and Instrumentation

1. Control of the transfer tray is manual.

2. The diverter tray will be interfaced with control and safety interlocks.

3. The safety interlocks will prevent operation of the diverter tray if the environmental conditions are not satisfactory.

4. The diverter tray will be controlled from the main control room.

E. Data Sheets

Equipment Tag Nos. WBS Area Location Numbers and equipment data sheets for this description are provided in **Appendix A.**

END OF SECTION

9413227.0627

WRAP MODULE 2A

APPENDIX A

EQUIPMENT/INSTRUMENT DATA SHEETS

WBS LOCATION	EQUIPMENT TAG	SERVICE
1105	X-05-521	Transfer Tray - Shredder and Repack Enclosure
1105	X-05-541	Transfer Tray - Pug Mill Enclosure
1105	X-05-522	Diverter Tray - Shredder and Repack Enclosure

9413227.0628

UNITED ENGINEERS & CONSTRUCTORS A Raytheon Company Western Operations	EQUIPMENT DATA SHEET ☒ CDR ☐ TITLE I ☐ TITLE II ☐ TITLE III	ITEM NUMBER X-05-521	PAGE 1 OF 1

CUSTOMER & LOCATION	PROJECT	UE&C JOB NO. 6237.006	DATE: 05/14/92
DOE-RL/WHC HANFORD, WA	WRAP FACILITY MODULE 2A	ACCOUNT NO.	BY: SAS

REVISIONS (DATE & BY)	A		B		C		D	
	E		F		G		H	

SERVICE	MANUFACTURER	NO. REQ'D.	SOURCE OF QUOTE
TRANSFER TRAY		1	

TRANSFER TRAY

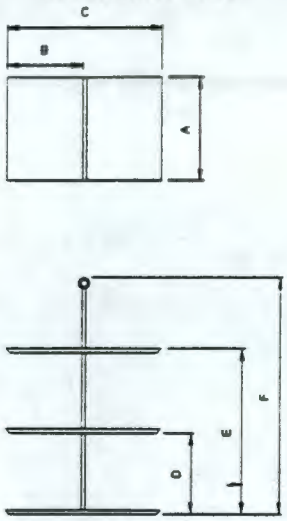

CONDITIONS OF SERVICE		DIMENSIONS	
APPLICATION: TRANSFER OF NONSHREDDABLE WASTE FROM SORT TABLE TO SIMPLE DOUBLE LID		A:	F:
UNIT LOAD DESCRIPTION: ITEMS OF WASTE NOT SUITABLE FOR SHREDDEDING		B:	G:
UNIT LOAD SIZE: 2' X 2' X 2'	DUTY: 8 HOURS/DAY	C:	H:
UNIT LOAD WEIGHT: 500 LBS		D:	I:
LOCATION: SHREDDER AND REPACK ENCLOSURE		E:	J:

CONSTRUCTION	
MATERIAL: STAINLESS STEEL	
WEIGHT: 200 LBS	

UNITED ENGINEERS & CONSTRUCTORS A Raytheon Company Western Operations	EQUIPMENT DATA SHEET ☒ CDR ☐ TITLE I ☐ TITLE II ☐ TITLE III	ITEM NUMBER X-05-541	PAGE 1 OF 1

CUSTOMER & LOCATION	PROJECT	UE&C JOB NO. 6237.006	DATE: 05/14/92
DOE-RL/WHC HANFORD, WA	WRAP FACILITY MODULE 2A	ACCOUNT NO.	BY: SAS

REVISIONS (DATE & BY)	A		B		C		D	
	E		F		G		H	

SERVICE	MANUFACTURER	NO. REQ'D.	SOURCE OF QUOTE
TRANSFER TRAY		1	

TRANSFER TRAY

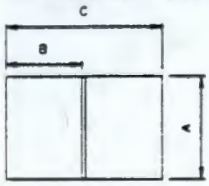

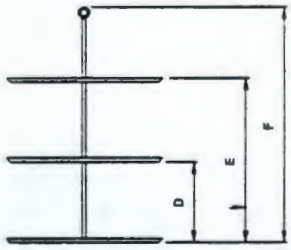

CONDITIONS OF SERVICE		DIMENSIONS	
APPLICATION: TRANSFER OF WASTE UNSUITABLE FOR PROCESSING IN PUG MILL FROM SORT TABLE TO SIMPLE DOUBLE LID		A:	F:
UNIT LOAD DESCRIPTION: ITEMS OF WASTE NOT SUITABLE FOR SHREDDEDING		B:	G:
UNIT LOAD SIZE: 2' X 2' X 2'	DUTY: 8 HOURS/DAY	C:	H:
UNIT LOAD WEIGHT: 500 LBS		D:	I:
LOCATION: PUG MILL ENCLOSURE		E:	J:
CONSTRUCTION			
MATERIAL: STAINLESS STEEL			
WEIGHT: 200 LBS			

9413227.0630

UNITED ENGINEERS & CONSTRUCTORS A Raytheon Company Western Operations	EQUIPMENT DATA SHEET ☒ CDR ☐ TITLE I ☐ TITLE II ☐ TITLE III	ITEM NUMBER X-05-522	PAGE 1 OF 1

CUSTOMER & LOCATION	PROJECT	UE&C JOB NO. 6237.006	DATE: 05/18/92
DOE-RL/WHC HANFORD, WA	WRAP FACILITY MODULE 2A	ACCOUNT NO.	BY: SAS

REVISIONS (DATE & BY)	A		B		C		D	
	E		F		G		H	

SERVICE	MANUFACTURER	NO. REQ'D.	SOURCE OF QUOTE
DIVERTER TRAY		1	

DIVERTER TRAY

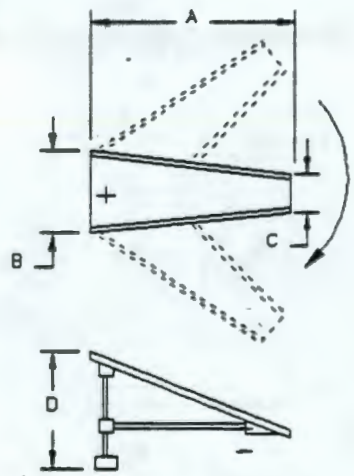

CONDITIONS OF SERVICE		DIMENSIONS	
APPLICATION: DIVERT LLRMW TO WEIGH HOPPERS		A:	F:
UNIT LOAD DESCRIPTION: LLRMW FROM 55 AND 85 GALLON DRUMS		B:	G:
UNIT LOAD SIZE: 15 CU FT/LOAD		C:	H:
UNIT LOAD WEIGHT: 1,000 LBS		D:	I:
LOCATION: SHREDDER AND REPACK ENCLOSURE		E:	J:
SOLIDS DENSITY: 30-450 LBS/CU FT			
SOLID SIZE: 2" X 2" X 2" MAX			
CYCLE TIME: 1 LOAD EVERY 5 MINS			
CONSTRUCTION			
MATERIAL: STAINLESS STEEL			
WEIGHT: 200 LBS			

9113227.0631

SECTION 14595

94/3227.0632

THIS PAGE INTENTIONALLY
LEFT BLANK

WRAP MODULE 2A

SPECIFICATION SECTION
FOR
14595 CONTAINER TRANSFER CARRIAGES

TABLE OF CONTENTS

PART 1 GENERAL

1.01 SECTION SCOPE
1.02 RELATED SECTIONS
1.03 REFERENCES
1.04 SYSTEM DESCRIPTION
1.05 SUBMITTALS
1.06 DELIVERY, STORAGE AND HANDLING
1.07 SITE CONDITIONS

PART 2 PRODUCTS

2.01 MANUFACTURERS
2.02 MATERIALS
2.03 EQUIPMENT
2.04 COMPONENTS
2.05 FABRICATION
2.06 SHOP QUALITY CONTROL

PART 3 EXECUTION

3.01 PREPARATION
3.02 ERECTION, INSTALLATION AND APPLICATION
3.03 FIELD QUALITY CONTROL
3.04 ADJUSTING AND CLEANING
3.05 DEMONSTRATION
3.06 PROTECTION

APPENDIX

APPENDIX A DATA SHEETS

9113227.0633

WRAP MODULE 2A

SECTION 14595

CONTAINER TRANSFER CARRIAGES

PART 1 GENERAL

1.01 SECTION SCOPE

A. This specification establishes the requirements for detailed design, fabrication, installation, start-up and acceptance testing of a transfer equipment for the transportation of containers within WRAP 2A process areas.

1.02 RELATED SECTIONS

1.03 REFERENCES

A. American National Standards Institute (ANSI)

B. American Society for Testing and Materials (ASTM)

C. National Electric Code (NEC)

D. American Welding Society (AWS)
AWS D1.1 "Structural Welding Code"

E. National Electric Manufacturers Association (NEMA)
NEMA MG-1 Motors and Generators

F. Anti Friction Bearing Manufacturers Association (AFBMA)

G. Mechanical Power Transmission Association (MPTA)

H. American Gear Manufacturers Association (AGMA)

1.04 SYSTEM DESCRIPTION

A. General Description

1. The carriages will be used to transport containers on a straight rail track and will stop at predetermined locations for loading and unloading.

2. A drive system will be used to move the carriage along the track to the designated positions.

B. Construction

1. Construction will be from carbon steel sections and will utilize a wheel and track system which ensures positive location to minimize the possibility of derailment. Platforms will be designed to meet the requirements of containers and for some application will include load cell weighing devices or roller conveyors.

C. Control and Instrumentation

1. The drive will be interlocked with control and safety interlocks.

2. The control interlocks for the car positioning will be built into the drive unit. Switches on the interfacing equipment, i.e., conveyors and drum loader, will be interlocked to ensure that the drum will only be loaded when the car is in the correct position. An indication will be provided for plant operators showing equipment status.

3. Safety interlocks will inhibit operation of equipment if the safe working criteria is not met.

D. Data Sheets

Equipment Tag Nos. WBS Area Location Numbers and equipment data sheets for this description are provided in **Appendix A.**

END OF SECTION

9N4227.0635

WRAP MODULE 2A

APPENDIX A

EQUIPMENT/INSTRUMENT DATA SHEETS

WBS LOCATION	EQUIPMENT TAG	SERVICE
1105	TC-05-501	Size Reduction Drum Transfer Car
	TC-05-521	Transfer Tunnel Car
1106	XX-06-103	Special Waste - Lead Basket Transfer
	XX-06-104	Special Waste - Discharge Hopper Transfer
	X-06-302	Reactive Metals - Feed Hopper Transfer

9413227.0636

UNITED ENGINEERS & CONSTRUCTORS A Raytheon Company Western Operations	EQUIPMENT DATA SHEET ☒ CDR ☐ TITLE I ☐ TITLE II ☐ TITLE III	ITEM NUMBER TC-05-501	PAGE 1 OF 1

CUSTOMER & LOCATION	PROJECT	UE&C JOB NO. 6237.006	DATE: 04/13/92
DOE-RL/WHC HANFORD, WA	WRAP FACILITY MODULE 2A	ACCOUNT NO.	BY: SAS

REVISIONS (DATE & BY)	A		B		C		D	
	E		F		G		H	

SERVICE	MANUFACTURER	NO. REQ'D.	SOURCE OF QUOTE
DRUM TRANSFER CAR		1	

DRUM TRANSFER CAR

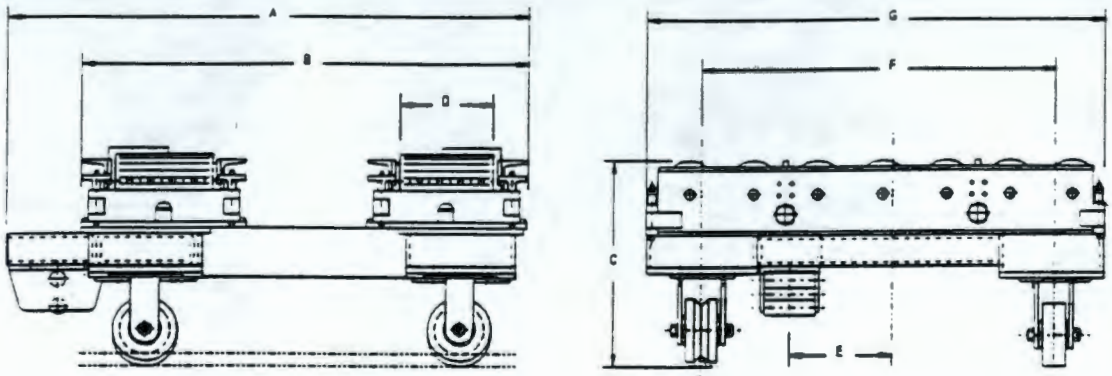

CONDITIONS OF SERVICE		DIMENSIONS	
APPLICATION: TRANSFER LLRMW DRUMS WITHIN THE SIZE REDUCTION AND REPACK CELL		A: 39"	F:
UNIT LOAD DESCRIPTION: 55 AND 85 GALLON DRUMS CONTAINING LLRMW		B: 35"	G:
UNIT LOAD SIZE: 26" DIA X 39" HIGH	DUTY: 8 HOURS/DAY	C: 13.5"	H:
UNIT LOAD WEIGHT: 3,000 LBS		D: 6"	I:
LOCATION: SIZE REDUCTION AND REPACK CELL		E:	J:
RATED CAPACITY: 3,000 LBS			
CONSTRUCTION			

9413227.0637

UNITED ENGINEERS & CONSTRUCTORS A Raytheon Company Western Operations	EQUIPMENT DATA SHEET ☒ CDR ☐ TITLE I ☐ TITLE II ☐ TITLE III	ITEM NUMBER TC-05-521	PAGE 1 OF 1

CUSTOMER & LOCATION	PROJECT	UE&C JOB NO. 6237.006	DATE: 06/13/92
DOE-RL/WHC HANFORD, WA	WRAP FACILITY MODULE 2A	ACCOUNT NO. 1105	BY: GBD

REVISIONS (DATE & BY)	A		B		C		D	
	E		F		G		H	

SERVICE	MANUFACTURER	NO. REQ'D.	SOURCE OF QUOTE
USED DRUM TRANSFER CAR		1	

CAR

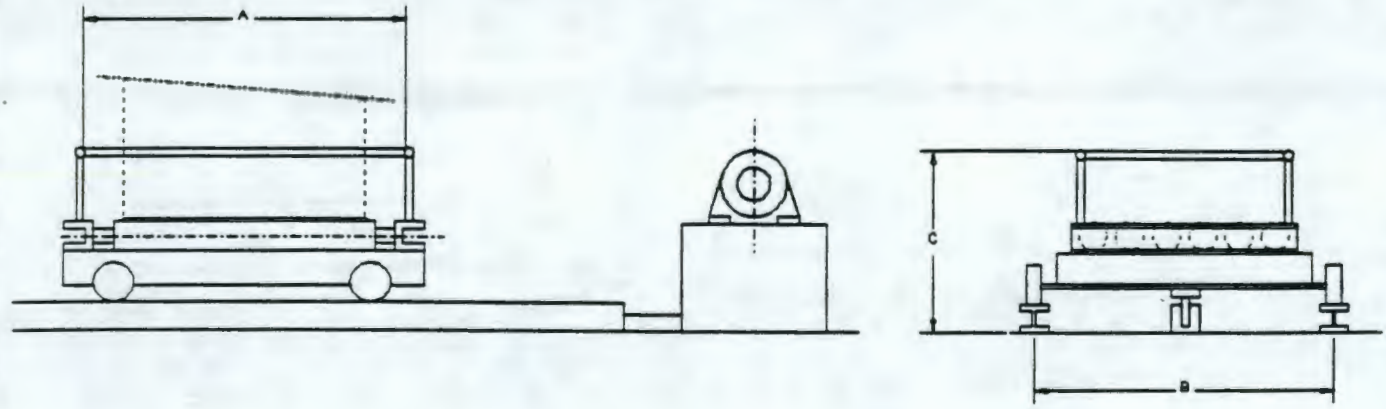

CONDITIONS OF SERVICE		DIMENSIONS	
APPLICATION: TRANSFER USED DRUMS BETWEEN ENCLOSURES		A: 2'-6"	F:
UNIT LOAD DESCRIPTION: EMPTY USED DRUMS		B: 3'-0"	G:
UNIT LOAD SIZE: 26" DIA X 39" HIGH	DUTY: 8 HOURS/DAY	C:	H:
UNIT LOAD WEIGHT:	NEMA ENCLOSURE: NEMA 1	D:	I:
LOCATION: INDOORS	CMAA CRANE SERVICE CLASS: CLASS C	E:	J:
RATED CAPACITY: 3,000 LBS	NEC AREA CLASS: UNCLASSIFIED		
CONSTRUCTION			
MATERIAL: A36	WHEELBASE: TBD		
AVAILABLE POWER (VOLTS/PHASE/HZ): 220/3/60	MAX WHEEL LOAD (W/25% IMPACT) (LBS): TBD		
BRIDGE SPAN: TBD	RECOMMENDED RUNWAY RAIL (LBS/YD): TBD		
TYPE OF CONTROL: REMOTE	END TRUCK WHEEL BEARING (TYPE/LIFE): TBD		
TYPE OF RUNWAY/TRACK CONDUCTORS: FESTOON	TOTAL WEIGHT (LBS): TBD		
TYPE OF DRIVE: TRACTION			

UNITED ENGINEERS & CONSTRUCTORS A Raytheon Company Western Operations	EQUIPMENT DATA SHEET ☒ CDR ☐ TITLE I ☐ TITLE II ☐ TITLE III	ITEM NUMBER XX-06-103	PAGE 1 OF 1

CUSTOMER & LOCATION	PROJECT	UE&C JOB NO. 6237.006	DATE: 06/15/92
DOE-RL/WHC HANFORD, WA	WRAP FACILITY MODULE 2A	ACCOUNT NO.	BY: GBD

REVISIONS (DATE & BY)	A		B		C		D	
	E		F		G		H	

SERVICE	MANUFACTURER	NO. REQ'D.	SOURCE OF QUOTE
TRANSFER CAR - LEAD BASKET		1	

TRANSFER CAR

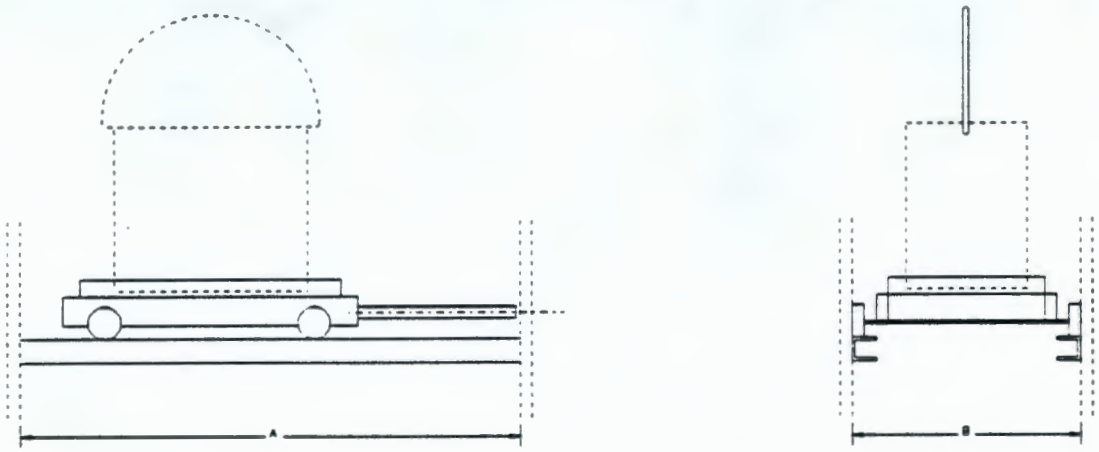

CONDITIONS OF SERVICE		DIMENSIONS	
APPLICATION: TRANSFER OF LEAD BRICK BASKET TO LOADING POSITION		A: 6'-0"	F:
UNIT LOAD DESCRIPTION: LEAD BRICK BASKET		B: 24"	G:
UNIT LOAD SIZE: 22.25" DIA X 12" HIGH	DUTY: 8 HRS/DAY	C:	H:
UNIT LOAD WEIGHT: 750 LBS		D:	I:
		E:	J:
CONSTRUCTION			
MATERIAL: A 36			
WEIGHT: 150 LBS			
ACTUATION: PNEUMATIC			
TRAVEL LENGTH: 4'-0"			

9413227.0639

UNITED ENGINEERS & CONSTRUCTORS A Raytheon Company Western Operations	EQUIPMENT DATA SHEET ☒ CDR ☐ TITLE I ☐ TITLE II ☐ TITLE III	ITEM NUMBER XX-06-104	PAGE 1 OF 1

CUSTOMER & LOCATION	PROJECT	UE&C JOB NO. 6237.006	DATE: 05/12/92
DOE-RL/WHC HANFORD, WA	WRAP FACILITY MODULE 2A	ACCOUNT NO.	BY: GBD

REVISIONS (DATE & BY)	A		B		C		D	
	E		F		G		H	

SERVICE	MANUFACTURER	NO. REQ'D.	SOURCE OF QUOTE
TRANSFER RAIL - DISCHARGE HOPPER		1	

TRANSFER RAIL - DISCHARGE HOPPER

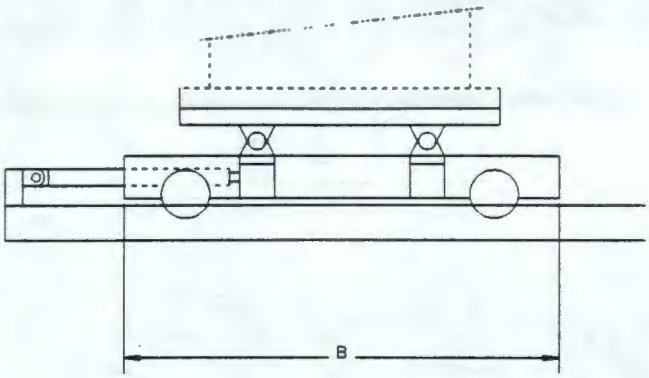

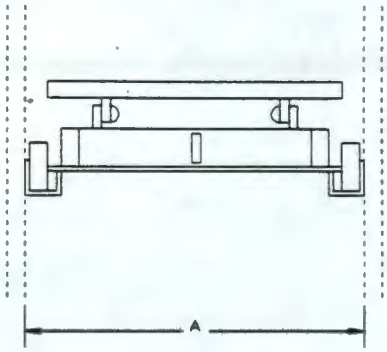

CONDITIONS OF SERVICE		DIMENSIONS	
APPLICATION: TRANSFER OF DISCHARGE BIN BETWEEN SHREDDER AND DRUM FILL		A: 5'-0"	F:
UNIT LOAD DESCRIPTION: SHREDDER DISCHARGE HOPPER		B: 3'-6"	G:
UNIT LOAD SIZE: 2'-6" DIA	DUTY: 8 HRS/DAY	C:	H:
UNIT LOAD WEIGHT: 1,500 LBS		D:	I:
		E:	J:

CONSTRUCTION	
MATERIAL: A36	WEIGHTING: SHEAR FIN LOAD CELLS
WEIGHT: 500 LBS	
ACTUATION: PNEUMATIC	
TRAVEL LENGTH: 5'-0"	

UNITED ENGINEERS & CONSTRUCTORS A Raytheon Company Western Operations	EQUIPMENT DATA SHEET ☒ CDR ☐ TITLE I ☐ TITLE II ☐ TITLE III	ITEM NUMBER X-06-302	PAGE 1 OF 1

CUSTOMER & LOCATION	PROJECT	UE&C JOB NO. 6237.006	DATE: 05/13/92
DOE-RL/WHC HANFORD, WA	WRAP FACILITY MODULE 2A	ACCOUNT NO.	BY: GBD

REVISIONS (DATE & BY)	A		B		C		D	
	E		F		G		H	

SERVICE	MANUFACTURER	NO. REQ'D.	SOURCE OF QUOTE
TRANSFER RAIL - FEED HOPPER		1	

TRANSFER RAIL - FEED HOPPER

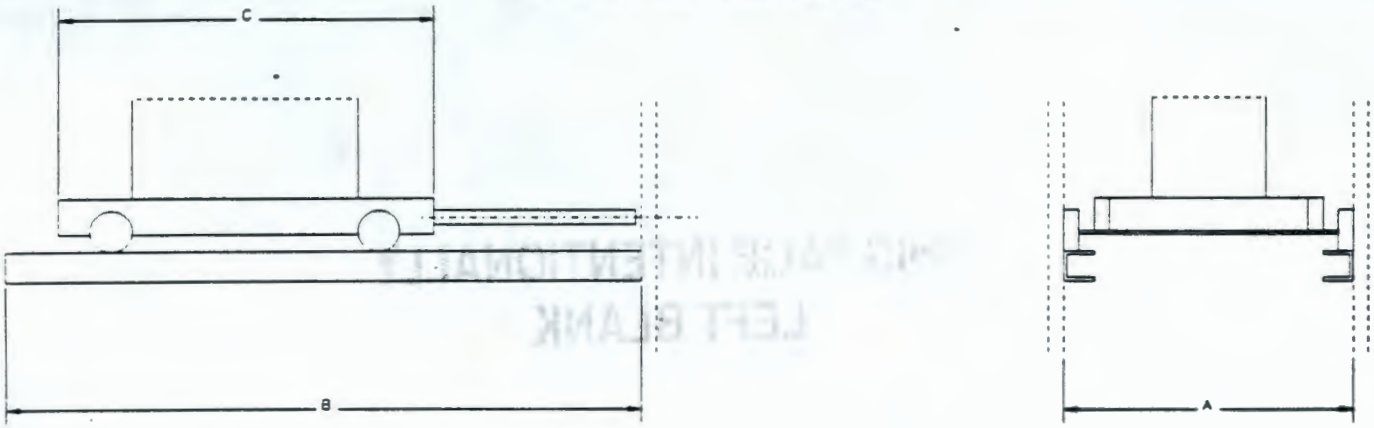

CONDITIONS OF SERVICE		DIMENSIONS	
APPLICATION: TRANSFER OF FEED HOPPER TO SCREEN LOAD LOCATION		A: 5'-0"	F:
UNIT LOAD DESCRIPTION: VIBRATORY SCREEN FEED HOPPER		B: 8'-0"	G:
UNIT LOAD SIZE: 3'-6" SQUARE	DUTY: 8 HRS/DAY	C: 4'-0"	H:
UNIT LOAD WEIGHT: 1,000 LBS		D:	I:
		E:	J:
CONSTRUCTION			
MATERIAL: A36			
WEIGHT: 500 LBS			
ACTUATION: PNEUMATIC			
TRAVEL LENGTH: 4'-0"			

9413227.0941

THIS PAGE INTENTIONALLY
LEFT BLANK

SECTION 14596

9W 3227.0642

THIS PAGE INTENTIONALLY
LEFT BLANK

WRAP MODULE 2A

SPECIFICATION SECTION
FOR
14596 TRANSFER BASKETS

TABLE OF CONTENTS

PART 1 GENERAL

1.01 SECTION SCOPE
1.02 RELATED SECTIONS
1.03 REFERENCES
1.04 SYSTEM DESCRIPTION
1.05 SUBMITTALS
1.06 DELIVERY, STORAGE AND HANDLING
1.07 SITE CONDITIONS

PART 2 PRODUCTS

2.01 MANUFACTURERS
2.02 MATERIALS
2.03 EQUIPMENT
2.04 COMPONENTS
2.05 FABRICATION
2.06 SHOP QUALITY CONTROL

PART 3 EXECUTION

3.01 PREPARATION
3.02 ERECTION, INSTALLATION AND APPLICATION
3.03 FIELD QUALITY CONTROL
3.04 ADJUSTING AND CLEANING
3.05 DEMONSTRATION
3.06 PROTECTION

APPENDIX

APPENDIX A DATA SHEETS

9413227.0643

APRIL 1992 UE&C PROJECT 6237.006

FILE NO. 14596 - 1

WRAP MODULE 2A

SECTION 14596

TRANSFER BASKETS

PART 1 GENERAL

1.01 SECTION SCOPE

A. This specification establishes the requirements for detailed design, fabrication and acceptance testing of baskets for the transfer of solid waste items into 55-gallon drums for immobilization.

1.02 RELATED SECTIONS

1.03 REFERENCES

A. American National Standards Institute (ANSI)

B. American Society for Testing and Materials (ASTM)

C. American Welding Society (AWS)
AWS D1.1 "Structural Welding Code"

1.04 SYSTEM DESCRIPTION

A. General Description

Baskets are provided to contain solid items of waste from the sort table and which are then loaded into a 55-gallon drum for transfer to an immobilization process. The baskets are fitted with radial spacers to fit into a 55-gallon drum and keep the contents a minimum of 2 inches from the drum wall.

B. Construction

Stainless steel bars will form the framework of the baskets to which will be attached a mesh sized to contain the solid waste. A lifting handle will be provided to enable a hoist to pick up the basket for transfer between the sort table and the drum.

9413227.0644

C. Data Sheets

Equipment Tag Nos. WBS Area Location Numbers and equipment data sheets for this description are provided in **Appendix A.**

END OF SECTION

9413277.1645

WRAP MODULE 2A

APPENDIX A

EQUIPMENT/INSTRUMENT DATA SHEETS

WBS LOCATION	EQUIPMENT TAG	SERVICE
1106	XX-06-101	Lead Brick Transfer
1106	XX-06-102	Mercury Bottle Transfer

9413227.0646

APRIL 1992

UE&C PROJECT NO. 6237.006

FILE NO. 14596 - A1

UNITED ENGINEERS & CONSTRUCTORS A Raytheon Company Western Operations	EQUIPMENT DATA SHEET ☒ CDR ☐ TITLE I ☐ TITLE II ☐ TITLE III	ITEM NUMBER XX-06-101	PAGE 1 OF 1

CUSTOMER & LOCATION	PROJECT	UE&C JOB NO. 6237.006	DATE: 05/15/92
DOE-RL/WHC HANFORD, WA	WRAP FACILITY MODULE 2A	ACCOUNT NO.	BY: GBD

REVISIONS (DATE & BY)	A		B		C		D	
	E		F		G		H	

SERVICE	MANUFACTURER	NO. REQ'D.	SOURCE OF QUOTE
TRANSFER BASKET - LEAD WASTE		1	

TRANSFER BASKET - LEAD BRICKS

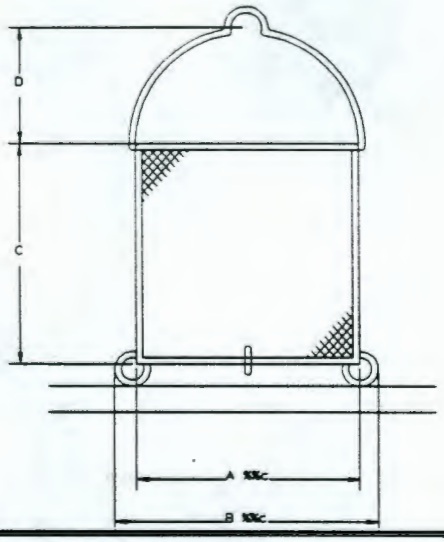

CONDITIONS OF SERVICE		DIMENSIONS	
APPLICATION: TO RECEIVE LEAD BRICKS AND TRANSFER TO DRUM FOR POLYMERIZATION		A: 18"	F:
UNIT LOAD DESCRIPTION: SOLID LEAD BRICKS		B: 22.25"	G:
UNIT LOAD SIZE: 9" X 6" X 4"		C: 12"	H:
UNIT LOAD WEIGHT: 700 LBS		D: 9"	I:
		E:	J:
CONSTRUCTION			
MATERIAL: A 36			
WEIGHT: 30 LBS			
MESH SIZE: 1" DIAMOND PATTERN			

9413227.0647

UNITED ENGINEERS & CONSTRUCTORS A Raytheon Company Western Operations	EQUIPMENT DATA SHEET ☒ CDR ☐ TITLE I ☐ TITLE II ☐ TITLE III	ITEM NUMBER XX-06-102	PAGE 1 OF 1

CUSTOMER & LOCATION	PROJECT	UE&C JOB NO. 6237.006	DATE: 05/15/92
DOE-RL/WHC HANFORD, WA	WRAP FACILITY MODULE 2A	ACCOUNT NO.	BY: GBD

REVISIONS (DATE & BY)	A		B		C		D	
	E		F		G		H	

SERVICE	MANUFACTURER	NO. REQ'D.	SOURCE OF QUOTE
TRANSFER BASKET - MERCURY WASTE		1	

TRANSFER BASKET - MERCURY

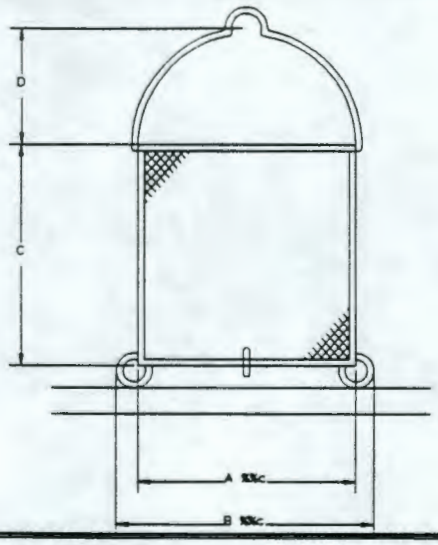

CONDITIONS OF SERVICE		DIMENSIONS	
APPLICATION: TO RECEIVE AMALGAMATED MERCURY FLASKS AND TRANSFER TO DRUM FOR POLYMERIZATION		A: 18"	F:
UNIT LOAD DESCRIPTION: SOLID LEAD BRICKS		B: 22.25"	G:
UNIT LOAD SIZE: 9" X 6" X 4"		C: 12"	H:
UNIT LOAD WEIGHT: 700 LBS		D: 9"	I:
		E:	J:
CONSTRUCTION			
MATERIAL: A 36			
WEIGHT: 30 LBS			
MESH SIZE: 1" DIAMOND PATTERN			

9413227 0648

SECTION 14600

9W3227-0649

THIS PAGE INTENTIONALLY
LEFT BLANK

THIS PAGE INTENTIONALLY
LEFT BLANK

WRAP MODULE 2A

SPECIFICATION SECTION
FOR
14600 HOIST AND CRANES

TABLE OF CONTENTS

PART 1 GENERAL

1.01 SECTION SCOPE
1.02 RELATED SECTIONS
1.03 REFERENCES
1.04 SYSTEM DESCRIPTION
1.05 SUBMITTALS
1.06 DELIVERY, STORAGE AND HANDLING
1.07 SITE CONDITIONS

PART 2 PRODUCTS

2.01 MANUFACTURERS
2.02 MATERIALS
2.03 EQUIPMENT
2.04 COMPONENTS
2.05 FABRICATION
2.06 SHOP QUALITY CONTROL

PART 3 EXECUTION

3.01 PREPARATION
3.02 ERECTION, INSTALLATION AND APPLICATION
3.03 FIELD QUALITY CONTROL
3.04 ADJUSTING AND CLEANING
3.05 DEMONSTRATION
3.06 PROTECTION

APPENDIX

APPENDIX A DATA SHEETS

WRAP MODULE 2A

SECTION 14600

HOISTS AND CRANES

PART 1 GENERAL

1.01 SECTION SCOPE

A. This specification establishes the requirements for detailed design, fabrication, installation, start-up, and acceptance testing of hoists or cranes throughout WRAP Module 2A Facility.

1.02 RELATED SECTIONS

1.03 REFERENCES

A. Crane Manufacturers of America (CMAA)
CMAA All applicable sections.

B. Hoist Manufacturers Institute (HMI)
HMI All applicable sections.

C. National Electric Manufacturers Assocation (NEMA)
NEMA All applicable sections.

D. Occupational Safety and Health Administration (OSHA)
OSHA All applicable sections.

E. National Electric Code (NEC)
NEC All applicable sections

F. American Gear Manufacturers Association (AGMA)
AGMA All applicable sections.

G. Mechanical Power Transmission Association (MPTA)
MPTA No. 301 All applicable sections.

H. American Welding Society (AWS)
AWS D1.1 Structural Welding Code

I. American National Standard Institute (ANSI)
ANSI All applicable sections.

J. Anti-Friction Bearing Manufacturers Association (AFBM)
AFBM All applicable sections.

9413227.0651

K. American Society for Testing and Materials (ASTM)
ASTM All applicable sections.

1.04 SYSTEM DESCRIPTION

A. There are two hoist and crane applications in WRAP 2A Facility; hoists and cranes in process area for handling containers for processing, lifting, lowering and transporting between various processing stages, and between various ground transporting systems. The second application--hoists and cranes for maintenance work on processing equipment.

B. Data Sheets

Equipment Tag Nos. WBS Area Location Numbers and equipment data sheets for this description are provided in **Appendix A.**

END OF SECTION

9413227.0652

WRAP MODULE 2A

APPENDIX A

EQUIPMENT/INSTRUMENT DATA SHEETS

WBS LOCATION	EQUIPMENT TAG	SERVICE
1105	CR-05-501	Overhead Crane
1105	CR-05-521	Drum Hoist
1105	CR-05-522	Hoist (Non-shreddable Items)
1105	CR-05-523	Maintenance Hoist
1105	CR-05-542	Hoist (Non-Pug Mill Processable Items)
1105	CR-05-543	Maintenance Hoist
1105	CR-05-561	Overhead Crane
1105	CR-05-541	Drum Hoist
1105	CR-05-601	Drum Hoist
1106	CR-06-101	Transfer Crane
1106	CR-06-103	Lead Brick Basket Hoist
1106	CR-06-102	Bin Hoist
1109	CR-09-101	Drum Jib Crane
1109	CR-09-102	Drum Jib Crane

9413227.0653

UNITED ENGINEERS & CONSTRUCTORS A Raytheon Company Western Operations	EQUIPMENT DATA SHEET ☒ CDR ☐ TITLE I ☐ TITLE II ☐ TITLE III	ITEM NUMBER CR-06-501	PAGE 1 OF 1
CUSTOMER & LOCATION DOE-RL/WHC HANFORD, WA	PROJECT WRAP FACILITY MODULE 2A	UE&C JOB NO. 6237.006	DATE: 04/13/92
		ACCOUNT NO.	BY: SAS

REVISIONS (DATE & BY)	A		B		C		D	
	E		F		G		H	

SERVICE	MANUFACTURER	NO. REQ'D.	SOURCE OF QUOTE
OVERHEAD CRANE		1	

OVERHEAD CRANE

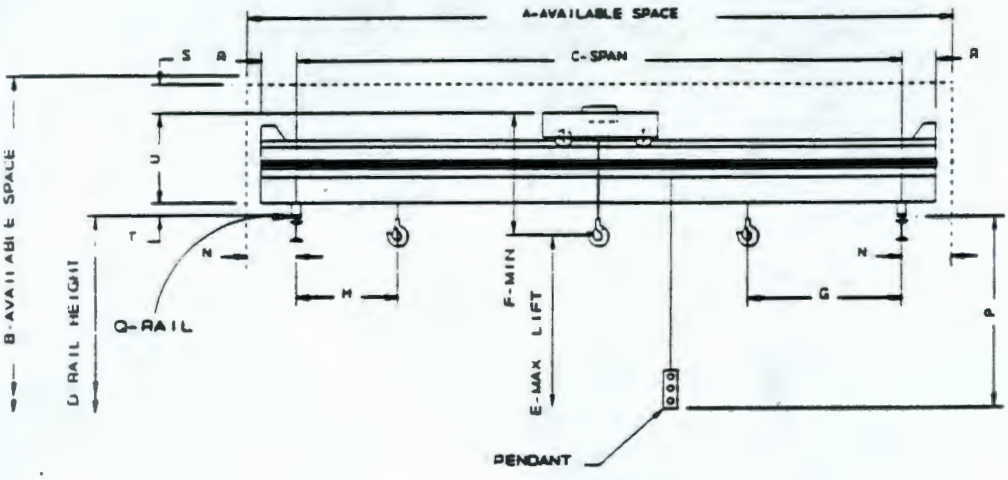

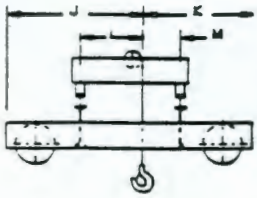

CONDITIONS OF SERVICE		DIMENSIONS	
APPLICATION: IN CELL MAINTENANCE		A:	L:
UNIT LOAD DESCRIPTION: TO CARRY LARGE EQUIPMENT WITHIN CELL		B:	M:
UNIT LOAD SIZE: 74" X 58" X 92"	DUTY: 8 HOURS/DAY	C:	N:
UNIT LOAD WEIGHT: 10 TONS	BRIDGE SPEED:	D:	P:
LOCATION: SIZE REDUCTION & REPACK CELL	NEC AREA CLASS: UNCLASSIFIED	E:	Q:
RATED CAPACITY: 15 TONS	SPAN:	F:	R:
	TRAVEL:	G:	S:
		H:	T:
CONSTRUCTION		J:	U:
STRUCTURAL STEEL MATL. (ASTM):	RECOMMENDED RUNWAY RAIL:	K:	
CMAA CRANE SERVICE CLASS:	TYPE OF RUNWAY/TRACK CONDUCTORS:		
TYPE OF CONTROL:	END TRUCK WHEELBASE:		
BRIDGE MOTOR:	END TRUCK WHEEL LOAD (W/ 25% Impact):		
AVAILABLE POWER (Volts/Phase/Hz):	END TRUCK WHEEL BEARING (Type/Life):		
NEMA ENCLOSURE:	MAST BEARING:		
WEIGHT: 30,500 LBS INCLUDING HOIST			
MOTOR RATING: 13 HP			

9413227.0654

UNITED ENGINEERS & CONSTRUCTORS A Raytheon Company Western Operations	EQUIPMENT DATA SHEET ☒ CDR ☐ TITLE I ☐ TITLE II ☐ TITLE III	ITEM NUMBER CR-05-521	PAGE 1 OF 1
CUSTOMER & LOCATION DOE-RL/WHC HANFORD, WA	PROJECT WRAP FACILITY MODULE 2A	UE&C JOB NO. 6237.006	DATE: 05/05/92
		ACCOUNT NO.	BY: SAS

REVISIONS (DATE & BY)	A		B		C		D	
	E		F		G		H	

SERVICE	MANUFACTURER	NO. REQ'D.	SOURCE OF QUOTE
GLOVEBOX MONORAIL HOIST		1	

ELECTRIC TROLLEY & HOIST

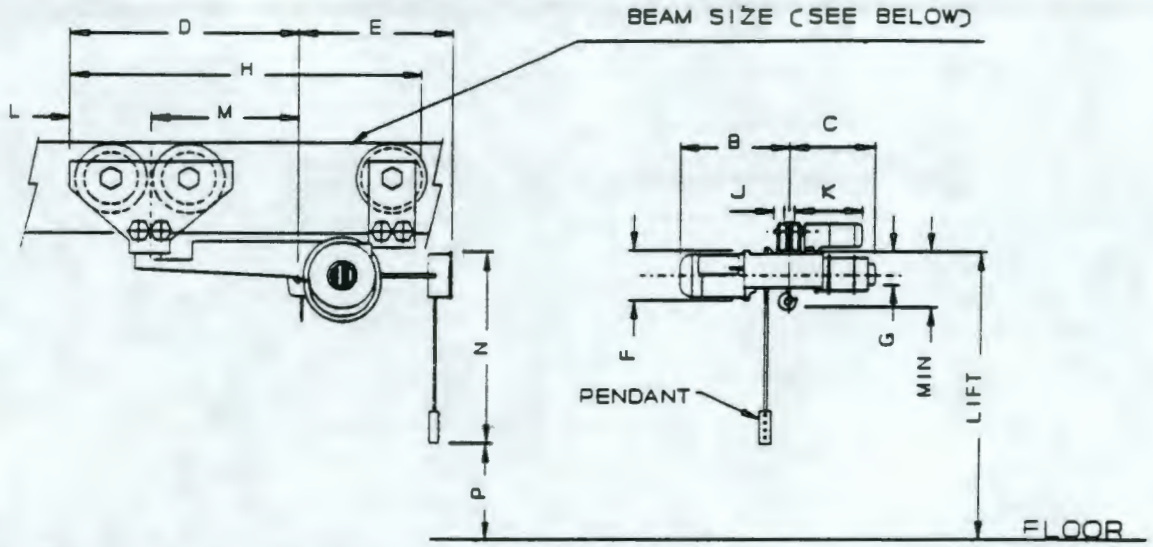

CONDITIONS OF SERVICE		DIMENSIONS	
APPLICATION: DRUM HANDLING WITHIN GLOVEBOXES		A:	H:
UNIT LOAD DESCRIPTION: 55 AND 85 GALLON DRUMS CONTAINING LLRMW		B:	J:
UNIT LOAD SIZE: 26.5" DIA X 39" HIGH	DUTY: 8 HOURS/DAY	C:	K:
UNIT LOAD WEIGHT: 3,000 LBS	TROLLEY SPEED: 30 FPM	D:	L:
LOCATION: SHREDDING AND REPACK ENCLOSURE	HOIST SPEED: 16 FPM	E:	M:
RATED CAPACITY: 2 TONS	NEC AREA CLASS: UNCLASSIFIED	F:	N:
HOOK LIFT: 10'		G:	
CONSTRUCTION			
HMI HOIST SERVICE CLASS:	TROLLEY WHEEL BEARING (Type/Life):		
TYPE OF CONTROL: REMOTE	TROLLEY DRIVE: ELECTRIC		
HOIST MOTOR RATING:	HOIST DRIVE: ELECTRIC		
TROLLEY MOTOR RATING:	HOIST TYPE: CHAIN		
AVAILABLE POWER (Volts/Phase/Hz): 460/3/60	NO. OF ROPE PARTS SUPPORTING LOAD:		
NEMA ENCLOSURE:	HOIST LIMIT SWITCH:		
MONORAIL SIZE:	HOIST & TROLLEY WT.:		

UNITED ENGINEERS & CONSTRUCTORS A Raytheon Company Western Operations	EQUIPMENT DATA SHEET ☒ CDR ☐ TITLE I ☐ TITLE II ☐ TITLE III	ITEM NUMBER CR-05-522	PAGE 1 OF 1
CUSTOMER & LOCATION DOE-RL/WHC HANFORD, WA	PROJECT WRAP FACILITY MODULE 2A	UE&C JOB NO. 6237.006	DATE: 05/05/92
		ACCOUNT NO.	BY: SAS

REVISIONS (DATE & BY)	A		B		C		D	
	E		F		G		H	

SERVICE	MANUFACTURER	NO. REQ'D.	SOURCE OF QUOTE
GLOVEBOX MONORAIL HOIST		1	

ELECTRIC TROLLEY & HOIST

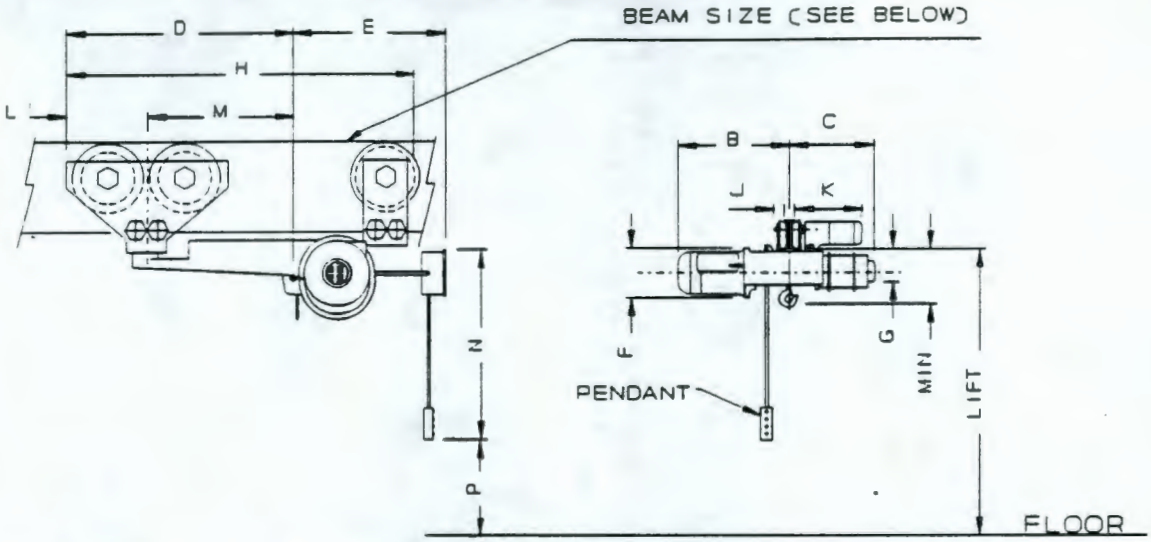

CONDITIONS OF SERVICE		DIMENSIONS	
APPLICATION: WASTE HANDLING WITHIN GLOVEBOXES		A:	H:
UNIT LOAD DESCRIPTION: NONCOMPLIENT ITEMS ON WASTE TRANSFER TRAY		B:	J:
UNIT LOAD SIZE: 22.5" DIA X 34.5" HIGH	DUTY: 8 HOURS/DAY	C:	K:
UNIT LOAD WEIGHT: 1,000 LBS	TROLLEY SPEED: 30 FPM	D:	L:
LOCATION: SHREDDING AND REPACK ENCLOSURE	HOIST SPEED: 16 FPM	E:	M:
RATED CAPACITY: 1 TONS	NEC AREA CLASS: UNCLASSIFIED	F:	N:
HOOK LIFT: 10'		G:	
CONSTRUCTION			
HMI HOIST SERVICE CLASS:	TROLLEY WHEEL BEARING (Type/Life):		
TYPE OF CONTROL: REMOTE	TROLLEY DRIVE: ELECTRIC		
HOIST MOTOR RATING: 1.0 HP	HOIST DRIVE: ELECTRIC		
TROLLEY MOTOR RATING:	HOIST TYPE: CHAIN		
AVAILABLE POWER (Volts/Phase/Hz): 460/3/60	NO. OF ROPE PARTS SUPPORTING LOAD:		
NEMA ENCLOSURE:	HOIST LIMIT SWITCH:		
MONORAIL SIZE:	HOIST & TROLLEY WT.:		

9413227.0656

UNITED ENGINEERS & CONSTRUCTORS A Raytheon Company Western Operations	EQUIPMENT DATA SHEET ☒ CDR ☐ TITLE I ☐ TITLE II ☐ TITLE III	ITEM NUMBER CR-05-523	PAGE 1 OF 1

CUSTOMER & LOCATION	PROJECT	UE&C JOB NO. 6237.006	DATE: 05/05/92
DOE-RL/WHC HANFORD, WA	WRAP FACILITY MODULE 2A	ACCOUNT NO.	BY: SAS

REVISIONS (DATE & BY)	A		B		C		D	
	E		F		G		H	

SERVICE	MANUFACTURER	NO. REQ'D.	SOURCE OF QUOTE
GLOVEBOX MONORAIL HOIST		1	

ELECTRIC TROLLEY & HOIST

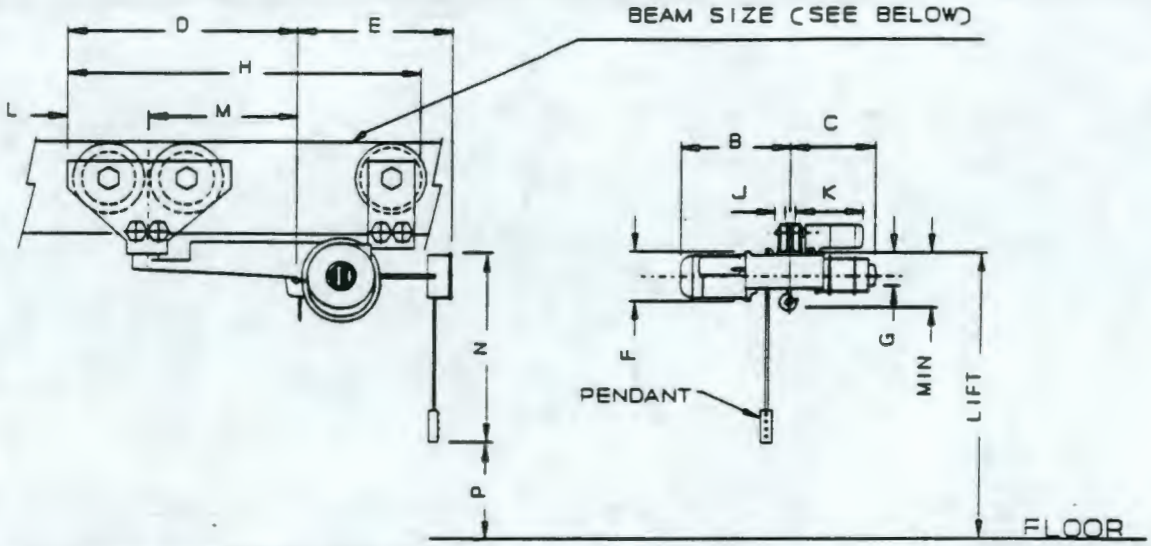

CONDITIONS OF SERVICE		DIMENSIONS	
APPLICATION: IN GLOVEBOX MAINTENANCE AND HANDLING OF DRUMS		A:	H:
UNIT LOAD DESCRIPTION: IN GLOVEBOX EQUIPMENT AND 55 AND 85 GALLON DRUMS		B:	J:
UNIT LOAD SIZE: 22.5" DIA X 34.5" HIGH	DUTY: 8 HOURS/DAY	C:	K:
UNIT LOAD WEIGHT: 1,000 LBS	TROLLEY SPEED: 30 FPM	D:	L:
LOCATION: SHREDDING & REPACK ENCLOSURE	HOIST SPEED: 16 FPM	E:	M:
RATED CAPACITY: 1 TON	NEC AREA CLASS: UNCLASSIFIED	F:	N:
HOOK LIFT: 10'		G:	
CONSTRUCTION			
HMI HOIST SERVICE CLASS:	TROLLEY WHEEL BEARING (Type/Life):		
TYPE OF CONTROL: REMOTE	TROLLEY DRIVE: ELECTRIC		
HOIST MOTOR RATING:	HOIST DRIVE: ELECTRIC		
TROLLEY MOTOR RATING:	HOIST TYPE: CHAIN		
AVAILABLE POWER (Volts/Phase/Hz): 460/3/60	NO. OF ROPE PARTS SUPPORTING LOAD:		
NEMA ENCLOSURE:	HOIST LIMIT SWITCH:		
MONORAIL SIZE:	HOIST & TROLLEY WT.:		

UNITED ENGINEERS & CONSTRUCTORS A Raytheon Company Western Operations	EQUIPMENT DATA SHEET ☒ CDR ☐ TITLE I ☐ TITLE II ☐ TITLE III	ITEM NUMBER CR-05-541	PAGE 1 OF 1
CUSTOMER & LOCATION DOE-RL/WHC HANFORD, WA	PROJECT WRAP FACILITY MODULE 2A	UE&C JOB NO. 6237.006	DATE: 05/05/92
		ACCOUNT NO.	BY: SAS

REVISIONS (DATE & BY)	A		B		C		D	
	E		F		G		H	

SERVICE	MANUFACTURER	NO. REQ'D.	SOURCE OF QUOTE
GLOVEBOX MONORAIL HOIST		1	

ELECTRIC TROLLEY AND HOIST

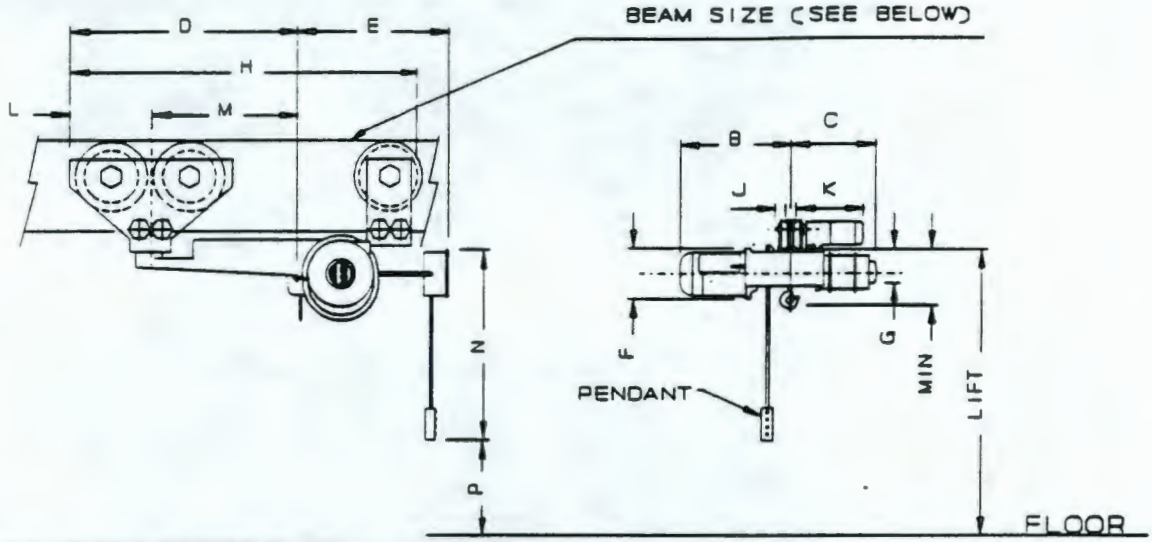

CONDITIONS OF SERVICE		DIMENSIONS	
APPLICATION: DRUM HANDLING WITHIN GLOVEBOXES		A:	H:
UNIT LOAD DESCRIPTION: 55 AND 85 GALLON DRUMS CONTAINING LLRMW		B:	J:
UNIT LOAD SIZE: 26" DIA X 39" HIGH	DUTY: 8 HOURS/DAY	C:	K:
UNIT LOAD WEIGHT: 3,000 LBS	TROLLEY SPEED: 30 FPM	D:	L:
LOCATION: PUG MILL ENCLOSURE	HOIST SPEED: 16 FPM	E:	M:
RATED CAPACITY: 2 TONS	NEC AREA CLASS: UNCLASSIFED	F:	N:
HOOK LIFT: 10 FT		G:	
CONSTRUCTION			
HMI HOIST SERVICE CLASS:	TROLLEY WHEEL BEARING (Type/Life):		
TYPE OF CONTROL: REMOTE	TROLLEY DRIVE: ELECTRIC		
HOIST MOTOR RATING:	HOIST DRIVE: ELECTRIC		
TROLLEY MOTOR RATING:	HOIST TYPE: CHAIN		
AVAILABLE POWER (Volts/Phase/Hz): 460/3/60	NO. OF ROPE PARTS SUPPORTING LOAD:		
NEMA ENCLOSURE:	HOIST LIMIT SWITCH:		
MONORAIL SIZE:	HOIST & TROLLEY WT.:		

9413227.0658

UNITED ENGINEERS & CONSTRUCTORS A Raytheon Company Western Operations	EQUIPMENT DATA SHEET ☒ CDR ☐ TITLE I ☐ TITLE II ☐ TITLE III	ITEM NUMBER CR-05-542	PAGE 1 OF 1

CUSTOMER & LOCATION	PROJECT	UE&C JOB NO. 6237.006	DATE: 05/05/92
DOE-RL/WHC HANFORD, WA	WRAP FACILITY MODULE 2A	ACCOUNT NO.	BY: SAS

REVISIONS (DATE & BY)	A		B		C		D	
	E		F		G		H	

SERVICE	MANUFACTURER	NO. REQ'D.	SOURCE OF QUOTE
GLOVEBOX MONORAIL HOIST		1	

ELECTRIC TROLLEY AND HOIST

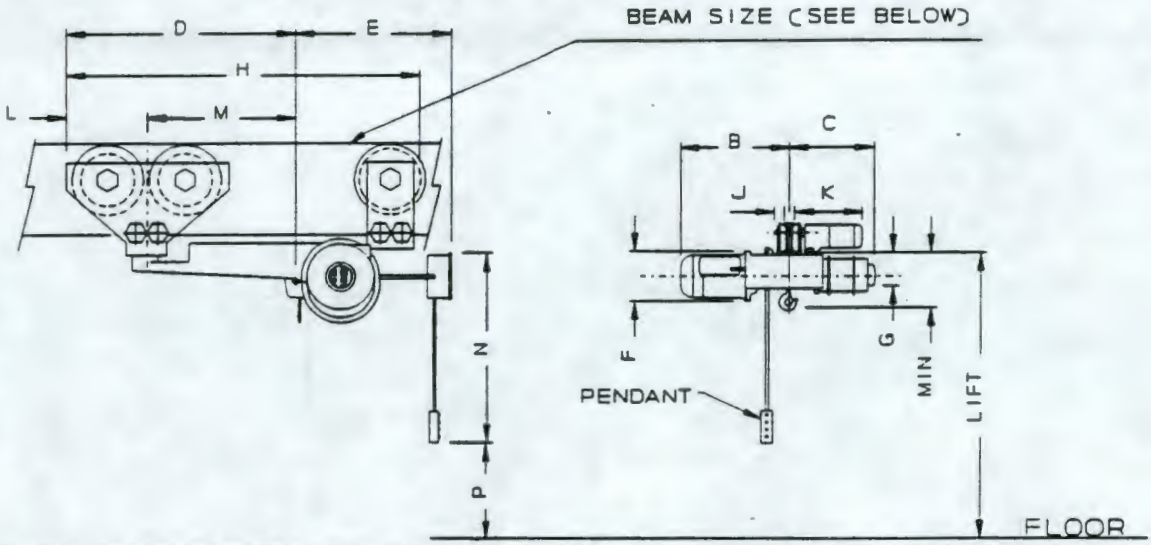

CONDITIONS OF SERVICE		DIMENSIONS	
APPLICATION: WASTE HANDLING WITHIN GLOVEBOXES		A:	H:
UNIT LOAD DESCRIPTION: ITEMS OF WASTE NOT SUITABLE FOR PROCESSING IN PUG MILL		B:	J:
UNIT LOAD SIZE: 22.5' DIA X 34.5° HIGH	DUTY: 8 HOURS/DAY	C:	K:
UNIT LOAD WEIGHT: 1,000 LBS MAX	TROLLEY SPEED: 30 FPM	D:	L:
LOCATION: PUG MILL ENCLOSURE	HOIST SPEED: 16 FPM	E:	M:
RATED CAPACITY: 1 TONS	NEC AREA CLASS: UNCLASSIFED	F:	N:
HOOK LIFT: 10 FT		G:	
CONSTRUCTION			
HMI HOIST SERVICE CLASS:	TROLLEY WHEEL BEARING (Type/Life):		
TYPE OF CONTROL: REMOTE	TROLLEY DRIVE: ELECTRIC		
HOIST MOTOR RATING: 1 HP	HOIST DRIVE: ELECTRIC		
TROLLEY MOTOR RATING:	HOIST TYPE: CHAIN		
AVAILABLE POWER (Volts/Phase/Hz): 460/3/60	NO. OF ROPE PARTS SUPPORTING LOAD:		
NEMA ENCLOSURE:	HOIST LIMIT SWITCH:		
MONORAIL SIZE:	HOIST & TROLLEY WT.:		

UNITED ENGINEERS & CONSTRUCTORS A Raytheon Company Western Operations	EQUIPMENT DATA SHEET ☒ CDR ☐ TITLE I ☐ TITLE II ☐ TITLE III	ITEM NUMBER CR-05-543	PAGE 1 OF 1

CUSTOMER & LOCATION	PROJECT	UE&C JOB NO. 6237.006	DATE: 05/05/92
DOE-RL/WHC HANFORD, WA	WRAP FACILITY MODULE 2A	ACCOUNT NO.	BY: SAS

REVISIONS (DATE & BY)	A		B		C		D	
	E		F		G		H	

SERVICE	MANUFACTURER	NO. REQ'D.	SOURCE OF QUOTE
GLOVEBOX MONORAIL HOIST		1	

ELECTRIC TROLLEY AND HOIST

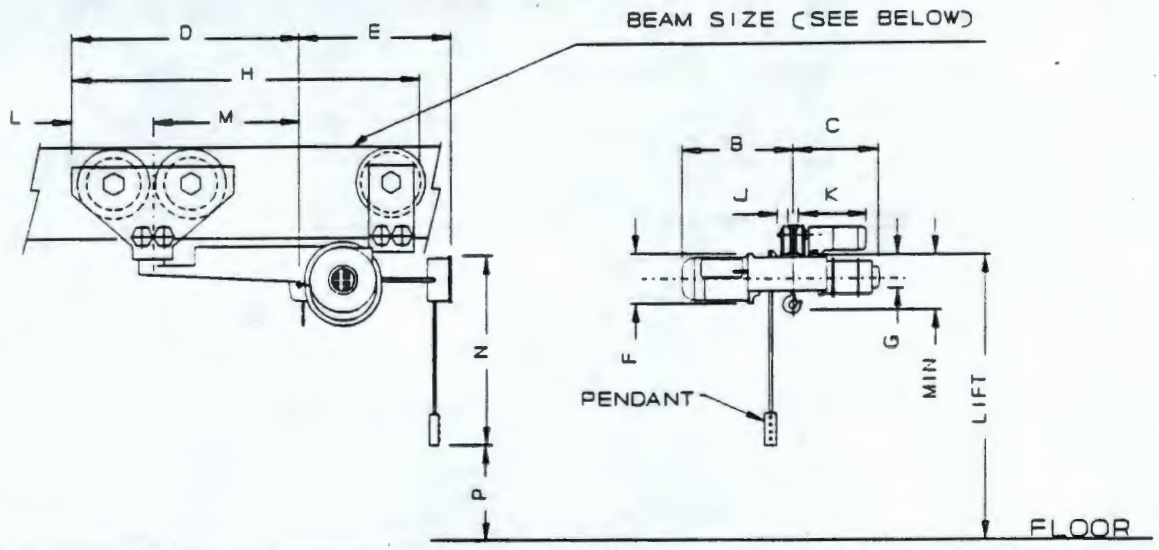

CONDITIONS OF SERVICE		DIMENSIONS	
APPLICATION: IN GLOVEBOX MAINTENANCE AND HANDLING OF DRUMS		A:	H:
UNIT LOAD DESCRIPTION: IN GLOVEBOX EQUIPMENT AND 55 AND 85 GALLON DRUMS		B:	J:
UNIT LOAD SIZE: 26" DIA X 39" HIGH	DUTY: 8 HOURS/DAY	C:	K:
UNIT LOAD WEIGHT: 1,000 LBS	TROLLEY SPEED: 30 FPM	D:	L:
LOCATION: PUG MILL ENCLOSURE	HOIST SPEED: 16 FPM	E:	M:
RATED CAPACITY: 1 TONS	NEC AREA CLASS: UNCLASSIFED	F:	N:
HOOK LIFT: 10 FT		G:	
CONSTRUCTION			
HMI HOIST SERVICE CLASS:	TROLLEY WHEEL BEARING (Type/Life):		
TYPE OF CONTROL: REMOTE	TROLLEY DRIVE: ELECTRIC		
HOIST MOTOR RATING: 1 HP	HOIST DRIVE: ELECTRIC		
TROLLEY MOTOR RATING:	HOIST TYPE: CHAIN		
AVAILABLE POWER (Volts/Phase/Hz): 460/3/60	NO. OF ROPE PARTS SUPPORTING LOAD:		
NEMA ENCLOSURE:	HOIST LIMIT SWITCH:		
MONORAIL SIZE:	HOIST & TROLLEY WT.:		

9413227.0660

UNITED ENGINEERS & CONSTRUCTORS A Raytheon Company Western Operations	EQUIPMENT DATA SHEET ☒ CDR ☐ TITLE I ☐ TITLE II ☐ TITLE III	ITEM NUMBER CR-05-561	PAGE 1 OF 2

CUSTOMER & LOCATION	PROJECT	UE&C JOB NO. 6237.006	DATE: 05/14/92
DOE-RL/WHC HANFORD, WA	WRAP FACILITY MODULE 2A	ACCOUNT NO.	BY: SAS

REVISIONS (DATE & BY)	A		B		C		D	
	E		F		G		H	

SERVICE	MANUFACTURER	NO. REQ'D.	SOURCE OF QUOTE
OVERHEAD CRANE		1	

OVERHEAD CRANE

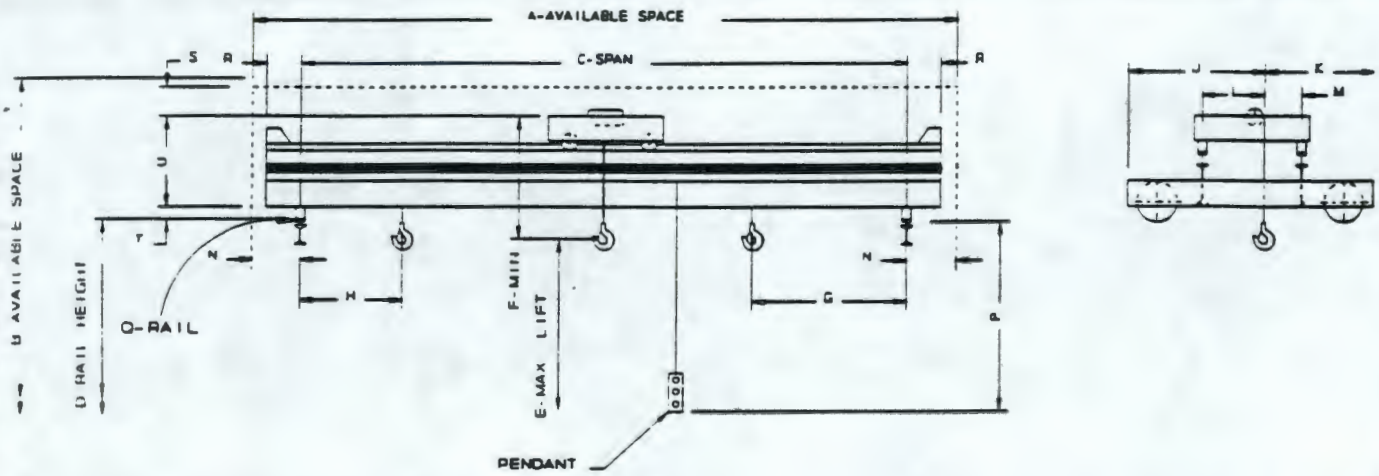

CONDITIONS OF SERVICE		DIMENSIONS	
APPLICATION: LIFT AND TRANSPORT BOXES WITHIN THE BOX BREAKDOWN CELL		A:	L:
UNIT LOAD DESCRIPTION: BOXES CONTAINING LLRMW		B:	M:
UNIT LOAD SIZE: 5' X 5' X 9'	DUTY: 8 HOURS/DAY	C:	N:
UNIT LOAD WEIGHT: 12,000 LBS	BRIDGE SPEED:	D:	P:
LOCATION: BOX BREAKDOWN CELL	NEC AREA CLASS:	E:	Q:
RATED CAPACITY: 8 TONS	SPAN:	F:	R:
		G:	S:
		H:	T:
CONSTRUCTION		J:	U:
STRUCTURAL STEEL MATL. (ASTM):	RECOMMENDED RUNWAY RAIL:	K:	
CMAA CRANE SERVICE CLASS:	TYPE OF RUNWAY/TRACK CONDUCTORS:		
TYPE OF CONTROL:	END TRUCK WHEELBASE:		
BRIDGE MOTOR:	END TRUCK WHEEL LOAD (W/ 25% Impact):		
AVAILABLE POWER (Volts/Phase/Hz):	END TRUCK WHEEL BEARING (Type/Life):		
NEMA ENCLOSURE:	MAST BEARING:		
WEIGHT:	TOTAL CRANE WT:		

UNITED ENGINEERS & CONSTRUCTORS A Raytheon Company Western Operations	EQUIPMENT DATA SHEET ☒ CDR ☐ TITLE I ☐ TITLE II ☐ TITLE III	ITEM NUMBER CR-05-601	PAGE 1 OF 1

CUSTOMER & LOCATION	PROJECT	UE&C JOB NO. 6237.006	DATE: 06/02/92
DOE-RL/WHC HANFORD, WA	WRAP FACILITY MODULE 2A	ACCOUNT NO.	BY: VAW

REVISIONS (DATE & BY)	A		B		C		D	
	E		F		G		H	

SERVICE	MANUFACTURER	NO. REQ'D.	SOURCE OF QUOTE
DRUM HOIST		1	

ELECTRIC TROLLEY AND HOIST

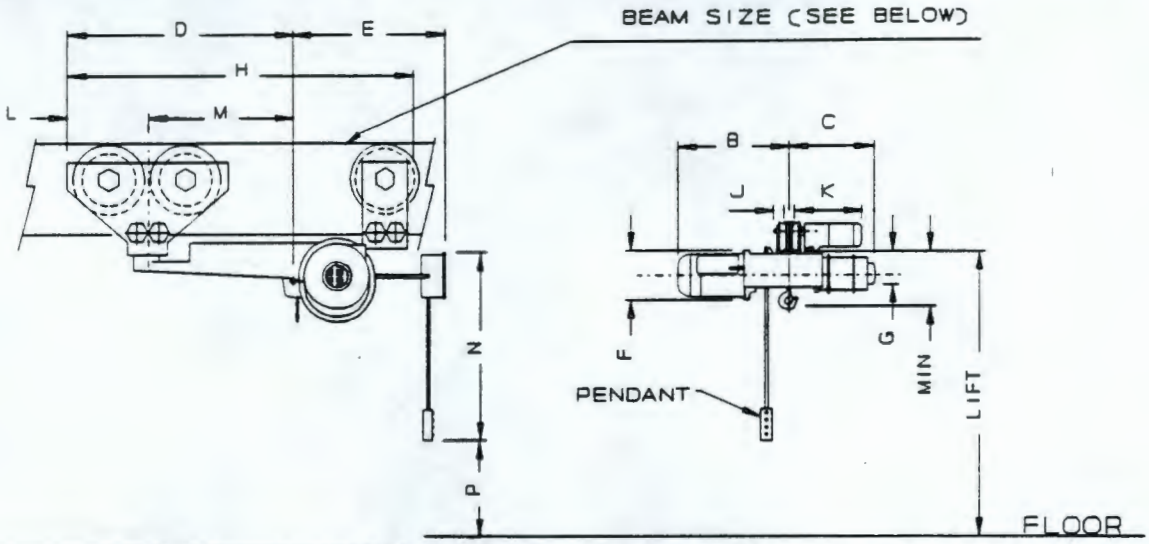

CONDITIONS OF SERVICE		DIMENSIONS	
APPLICATION: SAMPLE DRUM TRANSFERS IN CELL		A:	H:
UNIT LOAD DESCRIPTION: UNTREATED WASTE IN DRUMS		B:	J:
UNIT LOAD SIZE:	DUTY: 8 HOURS/DAY	C:	K:
UNIT LOAD WEIGHT: 3,000 LBS	TROLLEY SPEED: 30 FPM	D:	L:
LOCATION: SAMPLE MANAGEMENT AREA	HOIST SPEED: 16 FPM	E:	M:
RATED CAPACITY: 3 TONS	NEC AREA CLASS: UNCLASSIFED	F:	N:
HOOK LIFT: 8 FT		G:	
CONSTRUCTION			
HMI HOIST SERVICE CLASS: CLASS H3	TROLLEY WHEEL BEARING (Type/Life): A-F/5,000 HRS		
TYPE OF CONTROL: REMOTE/PENDANT	TROLLEY DRIVE: ELECTRIC		
HOIST MOTOR RATING: 2 HP	HOIST DRIVE: ELECTRIC		
TROLLEY MOTOR RATING: .25 HP	HOIST TYPE: CHAIN		
AVAILABLE POWER (Volts/Phase/Hz): 460/3/60	NO. OF ROPE PARTS SUPPORTING LOAD:		
NEMA ENCLOSURE: NEMA	HOIST LIMIT SWITCH: ROCER		
MONORAIL SIZE: TBD	HOIST & TROLLEY WT.: 300 LBS		

9413227.0662

UNITED ENGINEERS & CONSTRUCTORS A Raytheon Company Western Operations	EQUIPMENT DATA SHEET ☒ CDR ☐ TITLE I ☐ TITLE II ☐ TITLE III	ITEM NUMBER CR-06-101	PAGE 1 OF 1
CUSTOMER & LOCATION DOE-RL/WHC HANFORD, WA	PROJECT WRAP FACILITY MODULE 2A	UE&C JOB NO. 6237.006	DATE: 04/24/92
		ACCOUNT NO.	BY: RLH

REVISIONS (DATE & BY)	A		B		C		D	
	E		F		G		H	

SERVICE	MANUFACTURER	NO. REQ'D.	SOURCE OF QUOTE
TRANSFER CRANE		1	

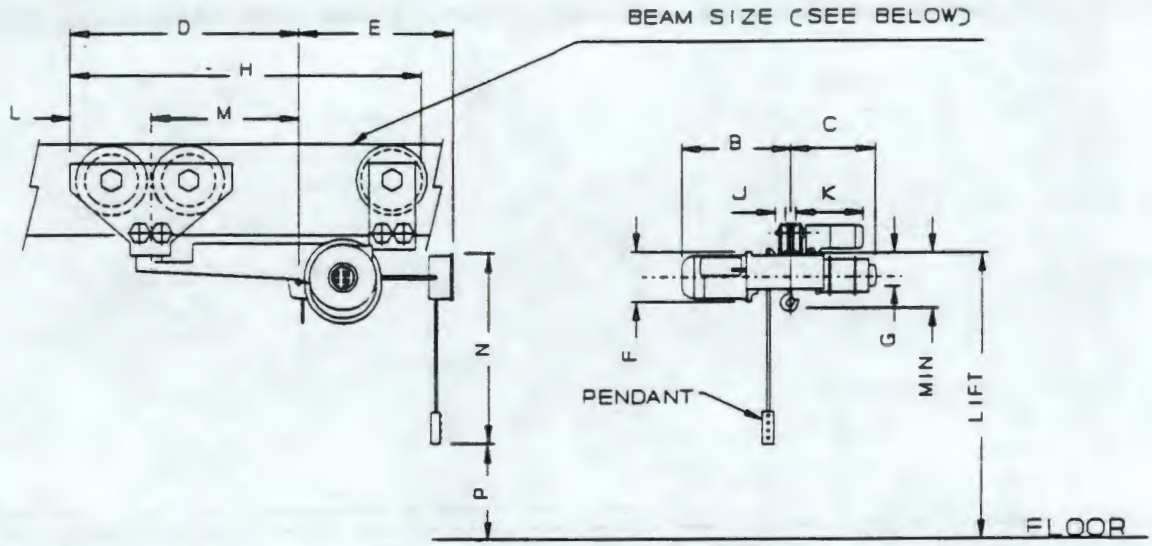

CONDITIONS OF SERVICE		DIMENSIONS	
APPLICATION: WASTE DRUM TRANSFER FROM ENTRY TO DRUM HANDLER		A:	H:
UNIT LOAD DESCRIPTION: 55 GALLON DRUMS		B:	J:
UNIT LOAD SIZE: 22.5" DIA X 34.5" HIGH	DUTY: 8 HOURS/DAY	C:	K:
UNIT LOAD WEIGHT: 3,000 LBS MAX	TROLLEY SPEED: 30 FPM	D:	L:
LOCATION: SHREDDER ENCLOSURE	HOIST SPEED: 16 FPM	E:	M:
RATED CAPACITY: 4,000 LBS	NEC AREA CLASS: UNCLASSIFED	F:	N:
HOOK LIFT: 25 FT		G:	
CONSTRUCTION			
HMI HOIST SERVICE CLASS: CLASS H3	TROLLEY WHEEL BEARING (Type/Life): A-F/5,000 HRS		
TYPE OF CONTROL: REMOTE/PENDANT	TROLLEY DRIVE: ELECTRIC		
HOIST MOTOR RATING: 2 HP	HOIST DRIVE: ELECTRIC		
TROLLEY MOTOR RATING: .25 HP	HOIST TYPE: CHAIN		
AVAILABLE POWER (Volts/Phase/Hz): 420/1/60	NO. OF ROPE PARTS SUPPORTING LOAD: 1		
NEMA ENCLOSURE: NEMA 1	HOIST LIMIT SWITCH: GRAVED PADDLE		
MONORAIL SIZE: TBD	HOIST & TROLLEY WT.: 200 LBS		

9413227.0663

UNITED ENGINEERS & CONSTRUCTORS A Raytheon Company Western Operations	EQUIPMENT DATA SHEET ☒ CDR ☐ TITLE I ☐ TITLE II ☐ TITLE III	ITEM NUMBER CR-06-102	PAGE 1 OF 1
CUSTOMER & LOCATION DOE-RL/WHC HANFORD, WA	PROJECT WRAP FACILITY MODULE 2A	UE&C JOB NO. 6237.006	DATE: 04/24/92
		ACCOUNT NO.	BY: RLH

REVISIONS (DATE & BY)	A		B		C		D	
	E		F		G		H	

SERVICE	MANUFACTURER	NO. REQ'D.	SOURCE OF QUOTE
BIN HOIST		1	

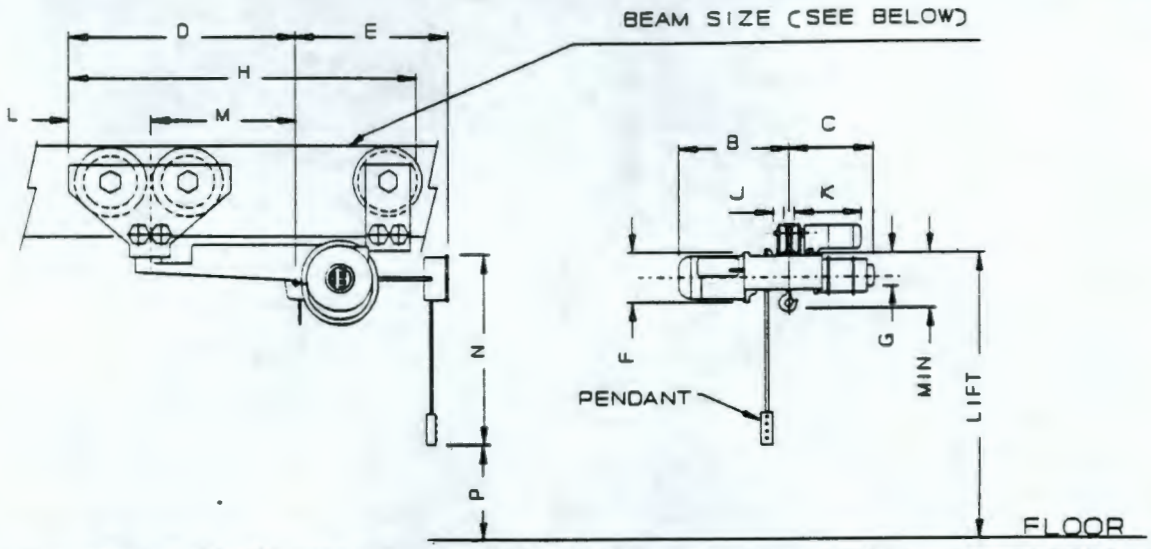

CONDITIONS OF SERVICE		DIMENSIONS	
APPLICATION: SHREDDER DISCHARGE BIN TRANSFER		A:	H:
UNIT LOAD DESCRIPTION: SHREDDED WASTE IN DISCHARGE BIN		B:	J:
UNIT LOAD SIZE: 2.5' DIA X 2.5' HIGH W/ 45° CONE	DUTY: 8 HOURS/DAY	C:	K:
UNIT LOAD WEIGHT: 3,000 TO 6,000 LBS	TROLLEY SPEED: 30 FPM	D:	L:
LOCATION: INSIDE SPECIAL WASTE ENCLOSURE	HOIST SPEED: 16 FPM	E:	M:
RATED CAPACITY: 6,000 LBS	NEC AREA CLASS: UNCLASSIFED	F:	N:
HOOK LIFT: 25 FT		G:	
CONSTRUCTION			
HMI HOIST SERVICE CLASS: CLASS H3	TROLLEY WHEEL BEARING (Type/Life): A-F/5,000 HRS		
TYPE OF CONTROL: REMOTE/PENDANT	TROLLEY DRIVE: ELECTRIC		
HOIST MOTOR RATING: 3 HP	HOIST DRIVE: ELECTRIC		
TROLLEY MOTOR RATING: .25 HP	HOIST TYPE: CHAIN		
AVAILABLE POWER (Volts/Phase/Hz): 460/3/60	NO. OF ROPE PARTS SUPPORTING LOAD: 1		
NEMA ENCLOSURE: NEMA 1	HOIST LIMIT SWITCH: ROCKER		
MONORAIL SIZE: TBD	HOIST & TROLLEY WT.: 300 LBS		

9413227.0694

UNITED ENGINEERS & CONSTRUCTORS A Raytheon Company Western Operations	EQUIPMENT DATA SHEET ☒ CDR ☐ TITLE I ☐ TITLE II ☐ TITLE III	ITEM NUMBER CR-06-103	PAGE 1 OF 1

CUSTOMER & LOCATION	PROJECT	UE&C JOB NO. 6237.006	DATE: 04/21/92
DOE-RL/WHC HANFORD, WA	WRAP FACILITY MODULE 2A	ACCOUNT NO.	BY: RLH

REVISIONS (DATE & BY)	A		B		C		D	
	E		F		G		H	

SERVICE	MANUFACTURER	NO. REQ'D.	SOURCE OF QUOTE
BASKET TRANSFER CRANE		1	

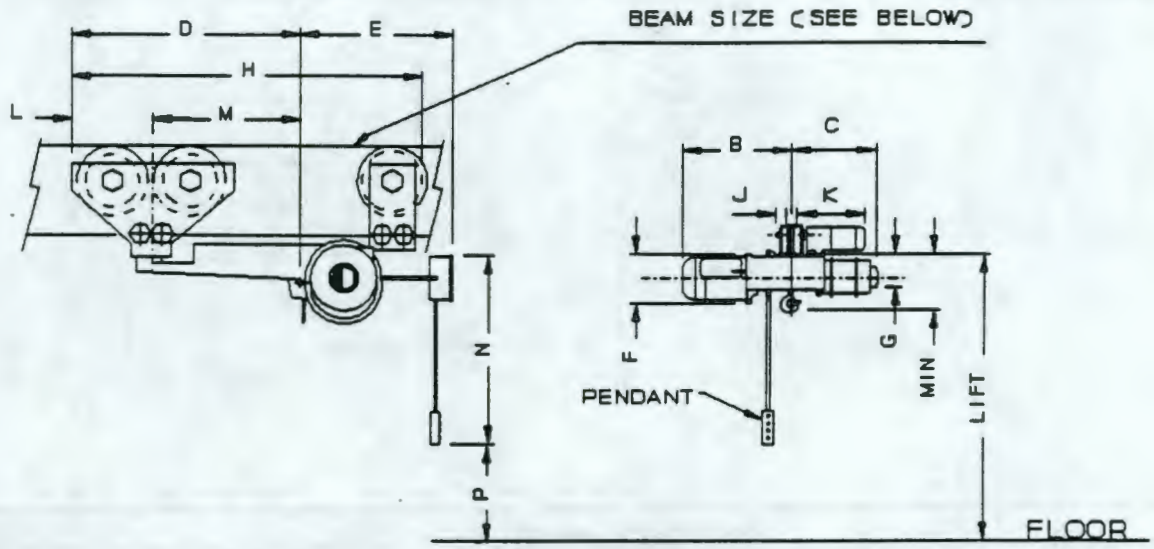

CONDITIONS OF SERVICE		DIMENSIONS	
APPLICATION: TRANSFER OF LEAD BRICK OR MERCURY BASKETS TO DRUM REPACK		A:	F:
UNIT LOAD DESCRIPTION: LEAD BRICK BASKETS, MERCURY TRANSFER BASKETS		B:	G:
UNIT LOAD SIZE: /FT³	DUTY: 8 HOURS/DAY	C:	H:
UNIT LOAD WEIGHT: 700 LBS MAX	TROLLEY SPEED: 30 RPM	D:	I:
LOCATION: SHREDDER ENCLOSURE	HOIST SPEED: 16 RPM	E:	J:
RATED CAPACITY: 2,000 LBS	NEC AREA CLASS: UNCLASSIFIED		
HOOK LIFT: 25'			
CONSTRUCTION			
HOIST MOTOR RATING: CLOSE H3	TROLLEY WHEEL BEAR (TYPE/LIFE): A-F/5,000 HRS		
TROLLEY MOTOR RATING: REMOTE/PENDANT	TROLLEY DRIVE: ELECTRIC		
LIFTING MECHANISM: 1 HP	HOIST DRIVE: ELECTRIC		
SIDE/TOP SEALS: 1/4 HP	HOIST TYPE: CHAIN		
BOTTOM SEAL TYPE: 120/1/60	NO. OF ROPE PARTS SUPPORTING LOAD: 1		
BOTTOM SEAL MATERIAL: NEMA 1	HOIST LIMIT SWITCH: ROCKER		
DRIVE; TBD	HOIST & TROLLEY WT.: 250 LBS		
BRAKE:			

UNITED ENGINEERS & CONSTRUCTORS A Raytheon Company Western Operations	EQUIPMENT DATA SHEET ☒ CDR ☐ TITLE I ☐ TITLE II ☐ TITLE III	ITEM NUMBER CR-09-101	PAGE 1 OF 2
CUSTOMER & LOCATION DOE-RL/WHC HANFORD, WA	PROJECT WRAP FACILITY MODULE 2A	UE&C JOB NO. 6237.006	DATE: 04/10/92
		ACCOUNT NO.	BY: JDC

REVISIONS (DATE & BY)	A		B		C		D	
	E		F		G		H	

SERVICE	MANUFACTURER	NO. REQ'D.	SOURCE OF QUOTE
DRUM JIB CRANE		1	

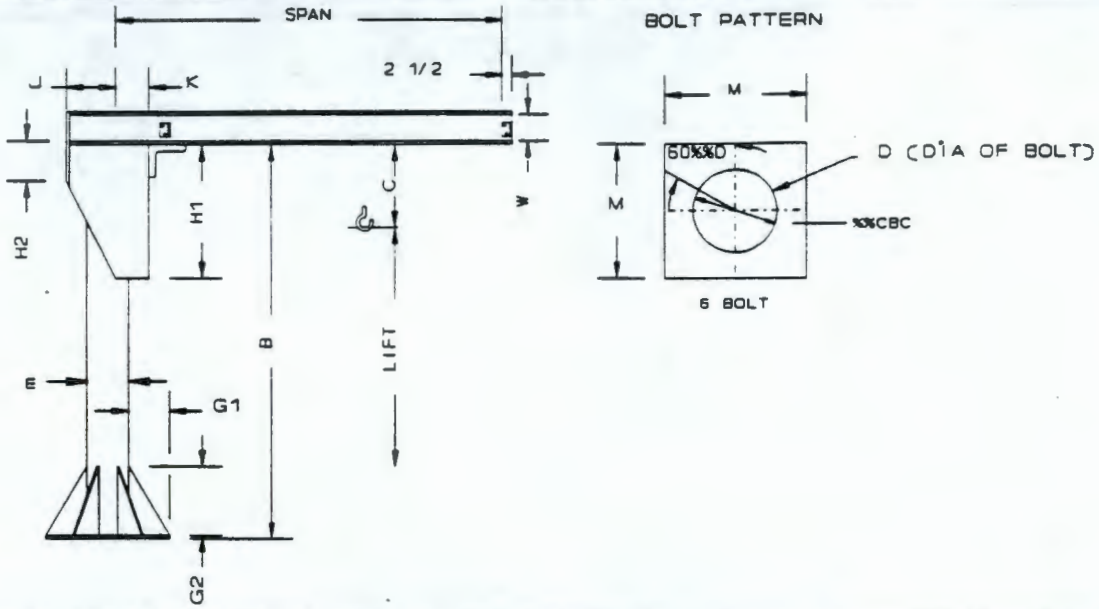

CONDITIONS OF SERVICE		DIMENSIONS	
APPLICATION: PALLETIZE/DEPALLETIZE WASTE DRUMS		A: 10'	L:
UNIT LOAD DESCRIPTION: 55 GALLON AND 83 GALLON WASTE DRUMS		B: 12'	M:
UNIT LOAD SIZE: 26" DIA X 39" HIGH	DUTY: 8 HOURS/DAY	C:	N:
UNIT LOAD WEIGHT: 3,000 LBS	BRIDGE SPEED: N/A	D:	P:
LOCATION: RECEIVING/SHIPPING	NEC AREA CLASS: UNCLASSIFIED	E:	Q:
RATED CAPACITY: 2 TONS	SPAN: 10'	F:	R:
		G:	S:
		H:	T:
CONSTRUCTION		J:	U:
STRUCTURAL STEEL MATL. (ASTM): A36	RECOMMENDED RUNWAY RAIL:	K:	
CMAA CRANE SERVICE CLASS:	TYPE OF RUNWAY/TRACK CONDUCTORS:		
TYPE OF CONTROL: PENDANT	END TRUCK WHEELBASE:		
JIB ROTATION MOTOR: .25 HP	END TRUCK WHEEL LOAD (W/ 25% Impact):		
AVAILABLE POWER (Volts/Phase/Hz): 120/3/60	END TRUCK WHEEL BEARING (Type/Life):		
NEMA ENCLOSURE:	MAST BEARING:		
	TOTAL CRANE WT: 2,670 LBS		

9413227.0666

UNITED ENGINEERS & CONSTRUCTORS A Raytheon Company Western Operations	EQUIPMENT DATA SHEET ☒ CDR ☐ TITLE I ☐ TITLE II ☐ TITLE III	ITEM NUMBER CR-09-101	PAGE 2 OF 2

CUSTOMER & LOCATION	PROJECT	UE&C JOB NO. 6237.006	DATE: 04/10/92
DOE-RL/WHC HANFORD, WA	WRAP FACILITY MODULE 2A	ACCOUNT NO.	BY: JDC

REVISIONS (DATE & BY)	A		B		C		D	
	E		F		G		H	

SERVICE	MANUFACTURER	NO. REQ'D.	SOURCE OF QUOTE
DRUM JIB CRANE		1	

ELECTRIC TROLLEY & HOIST

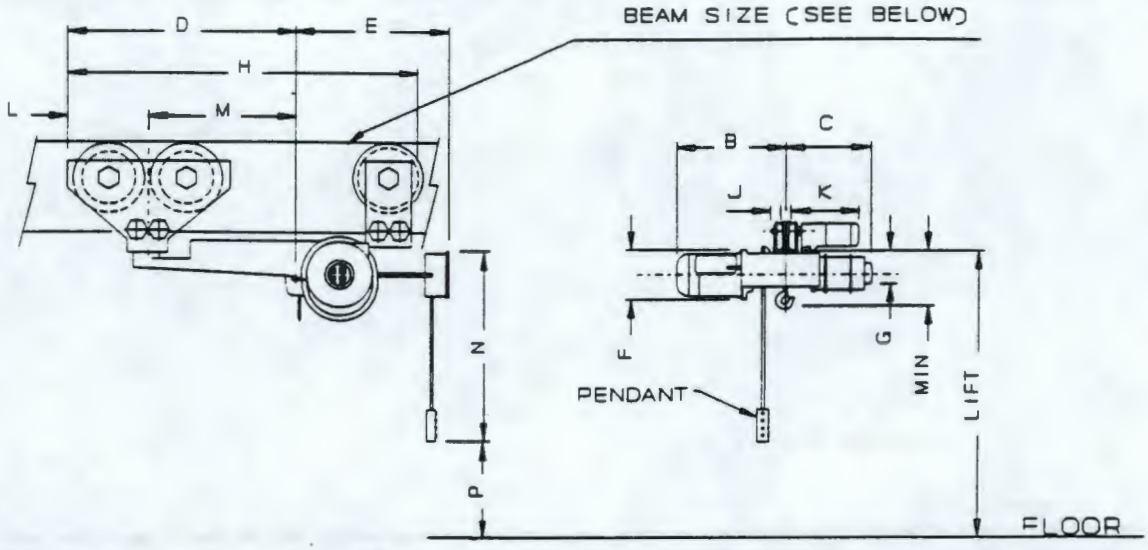

CONDITIONS OF SERVICE		DIMENSIONS	
APPLICATION: PALLETIZE/DEPALLETIZE DRUMS		A:	H:
UNIT LOAD DESCRIPTION: 55 AND 83 GALLON WASTE DRUMS		B:	J:
UNIT LOAD SIZE: 26" DIA X 39" HIGH	DUTY: 8 HOURS/DAY	C:	K:
UNIT LOAD WEIGHT: 3,000 LBS	TROLLEY SPEED: 40 FPM	D:	L:
LOCATION: RECEIVING/SHIPPING	HOIST SPEED: 14 FPM	E:	M:
RATED CAPACITY: 2 TONS	NEC AREA CLASS: .	F:	N:
HOOK LIFT:		G:	
CONSTRUCTION			
HMI HOIST SERVICE CLASS:	TROLLEY WHEEL BEARING (Type/Life):		
TYPE OF CONTROL: PENDANT	TROLLEY DRIVE: ELECTRIC		
HOIST MOTOR RATING: 2 HP	HOIST DRIVE: ELECTRIC		
TROLLEY MOTOR RATING: 1 HP	HOIST TYPE:		
AVAILABLE POWER (Volts/Phase/Hz): 460/3/60	NO. OF ROPE PARTS SUPPORTING LOAD:		
NEMA ENCLOSURE:	HOIST LIMIT SWITCH:		
MONORAIL SIZE:	HOIST & TROLLEY WT.: N/A		

UNITED ENGINEERS & CONSTRUCTORS A Raytheon Company Western Operations	EQUIPMENT DATA SHEET ☒ CDR ☐ TITLE I ☐ TITLE II ☐ TITLE III	ITEM NUMBER CR-09-102	PAGE 1 OF 2
CUSTOMER & LOCATION DOE-RL/WHC HANFORD, WA	PROJECT WRAP FACILITY MODULE 2A	UE&C JOB NO. 6237.006	DATE: 04/10/92
		ACCOUNT NO.	BY: JDC

REVISIONS (DATE & BY)	A		B		C		D	
	E		F		G		H	

SERVICE	MANUFACTURER	NO. REQ'D.	SOURCE OF QUOTE
DRUM JIB CRANE		1	

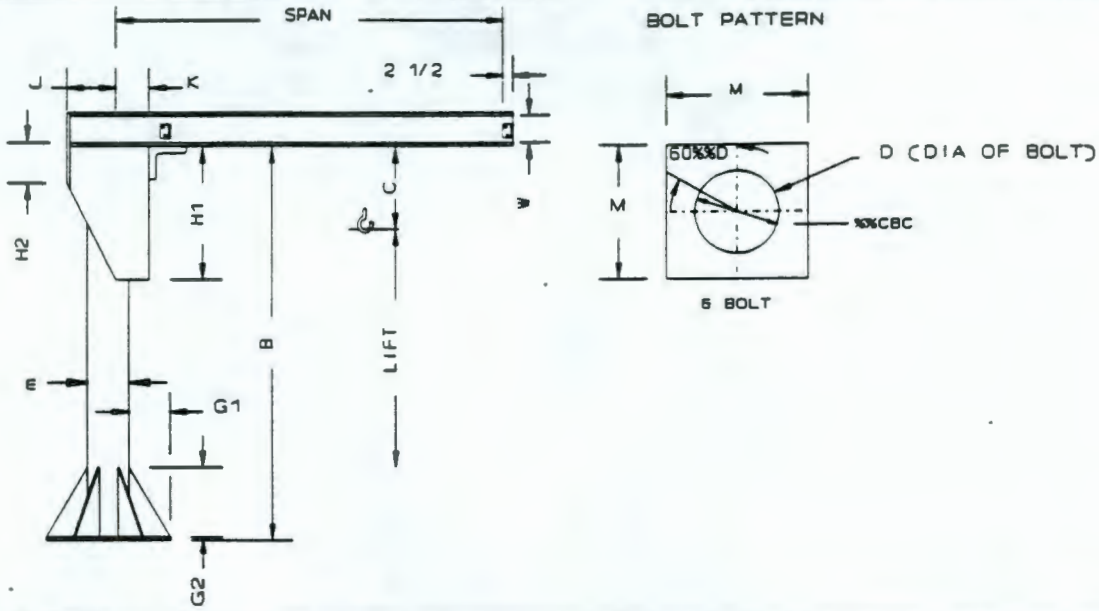

CONDITIONS OF SERVICE		DIMENSIONS	
APPLICATION: PALLETIZE/DEPALLETIZE WASTE DRUMS		A: 10'	L:
UNIT LOAD DESCRIPTION: 55 GALLON AND 83 GALLON WASTE DRUMS		B: 12'	M:
UNIT LOAD SIZE: 26" DIA X 39" HIGH	DUTY: 8 HOURS/DAY	C:	N:
UNIT LOAD WEIGHT: 3,000 LBS	BRIDGE SPEED: N/A	D:	P:
LOCATION: RECEIVING/SHIPPING	NEC AREA CLASS: UNCLASSIFIED	E:	Q:
RATED CAPACITY: 2 TONS	SPAN: 10'	F:	R:
		G:	S:
		H:	T:
CONSTRUCTION		J:	U:
STRUCTURAL STEEL MATL. (ASTM): A36	RECOMMENDED RUNWAY RAIL:	K:	
CMAA CRANE SERVICE CLASS:	TYPE OF RUNWAY/TRACK CONDUCTORS:		
TYPE OF CONTROL: PENDANT	END TRUCK WHEELBASE:		
JIB ROTATION MOTOR: .25 HP	END TRUCK WHEEL LOAD (W/ 25% Impact):		
AVAILABLE POWER (Volts/Phase/Hz): 120/3/60	END TRUCK WHEEL BEARING (Type/Life):		
NEMA ENCLOSURE:	MAST BEARING:		
	TOTAL CRANE WT: 2,670 LBS		

9413227.0668

UNITED ENGINEERS & CONSTRUCTORS A Raytheon Company Western Operations	EQUIPMENT DATA SHEET ☒ CDR ☐ TITLE I ☐ TITLE II ☐ TITLE III	ITEM NUMBER CR-09-102	PAGE 2 OF 2
CUSTOMER & LOCATION DOE-RL/WHC HANFORD, WA	PROJECT WRAP FACILITY MODULE 2A	UE&C JOB NO. 6237.006 / ACCOUNT NO.	DATE: 04/10/92 / BY: JDC

REVISIONS (DATE & BY)	A		B		C		D	
	E		F		G		H	

SERVICE	MANUFACTURER	NO. REQ'D.	SOURCE OF QUOTE
DRUM JIB CRANE		1	

ELECTRIC TROLLEY & HOIST

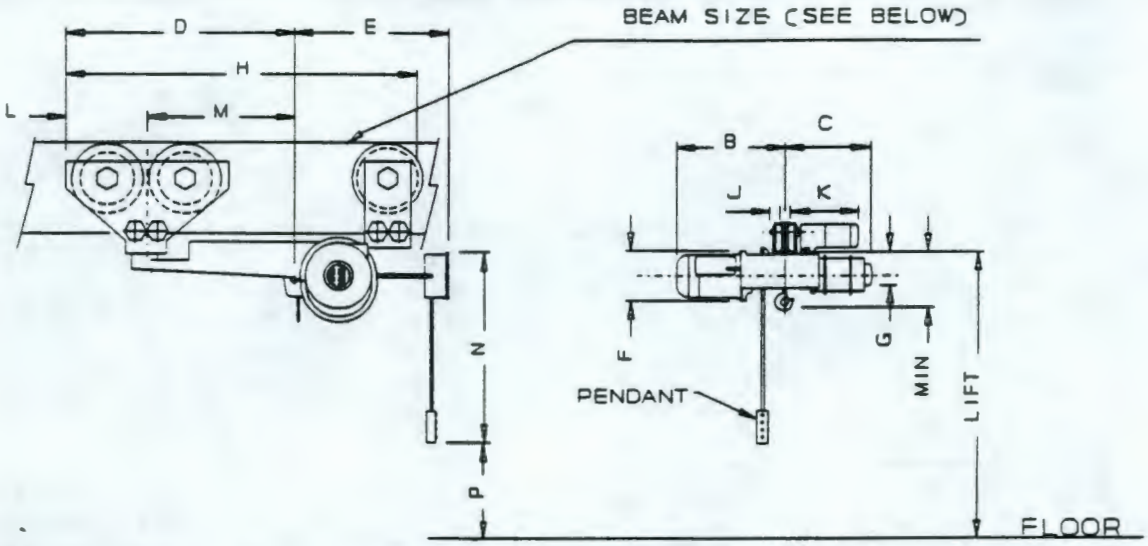

CONDITIONS OF SERVICE		DIMENSIONS	
APPLICATION: PALLETIZE/DEPALLETIZE DRUMS		A:	H:
UNIT LOAD DESCRIPTION: 55 AND 83 GALLON WASTE DRUMS		B:	J:
UNIT LOAD SIZE: 26" DIA X 32" HIGH	DUTY: 8 HOURS/DAY	C:	K:
UNIT LOAD WEIGHT: 3,000 LBS	TROLLEY SPEED: 40 FPM	D:	L:
LOCATION: RECEIVING/SHIPPING	HOIST SPEED: 14 FPM	E:	M:
RATED CAPACITY: 2 TONS	NEC AREA CLASS:	F:	N:
HOOK LIFT:		G:	
CONSTRUCTION			
HMI HOIST SERVICE CLASS:	TROLLEY WHEEL BEARING (Type/Life):		
TYPE OF CONTROL: PENDANT	TROLLEY DRIVE: ELECTRIC		
HOIST MOTOR RATING: 2 HP	HOIST DRIVE: ELECTRIC		
TROLLEY MOTOR RATING: 1 HP	HOIST TYPE:		
AVAILABLE POWER (Volts/Phase/Hz): 460/3/60	NO. OF ROPE PARTS SUPPORTING LOAD:		
NEMA ENCLOSURE:	HOIST LIMIT SWITCH:		
MONORAIL SIZE:	HOIST & TROLLEY WT.: N/A		

SECTION 14620

9413227.0670

THIS PAGE INTENTIONALLY
LEFT BLANK

THIS PAGE INTENTIONALLY
LEFT BLANK

WRAP MODULE 2A

SPECIFICATION SECTION
FOR
14620 AUTOMATIC STORAGE/RETRIEVAL

TABLE OF CONTENTS

PART 1 GENERAL

1.01 SECTION SCOPE
1.02 RELATED SECTIONS
1.03 REFERENCES
1.04 SYSTEM DESCRIPTION
1.05 SUBMITTALS
1.06 DELIVERY, STORAGE AND HANDLING
1.07 SITE CONDITIONS

PART 2 PRODUCTS

2.01 MANUFACTURERS
2.02 MATERIALS
2.03 EQUIPMENT
2.04 COMPONENTS
2.05 FABRICATION
2.06 SHOP QUALITY CONTROL

PART 3 EXECUTION

3.01 PREPARATION
3.02 ERECTION, INSTALLATION AND APPLICATION
3.03 FIELD QUALITY CONTROL
3.04 ADJUSTING AND CLEANING
3.05 DEMONSTRATION
3.06 PROTECTION

APPENDIX

APPENDIX A DATA SHEETS

94 1027 1491

WRAP MODULE 2A

SECTION 14620

AUTOMATIC STORAGE/RETRIEVAL

PART 1 GENERAL

1.01 SECTION SCOPE

A. This specification establishes the requirements for detailed design, fabrication, installation of the storage retrieval system, inventory control system, pallet storage rack, rack guard, anchor bolts and other necessary safety items that are included in the work scope.

1.02 RELATED SECTIONS

1.03 REFERENCES

A. American Iron and Steel Institute (AISI)
AISI SG-673 — Specification for Design of Cold-formed Steel Structural Members

B. American Institute of Steel Construction (AISC)
AISC — Specification for the Design, Fabrication and Erection of Structural Steel for Buildings

C. American National Standards Institute (ANSI)
ANSI MH16.2 — Safety Practices for the Use of Industrial and Commercial Steel Storage Racks

D. American Society of Testing Materials (ASTM)

E. American Welding Society (AWS)
AWS D-1.3 — Structural Welding Code-Sheet Steel

F. Occupational Safety and Health Administration (OSHA).
OSHA 29 CFR 1910.178

G. National Electric Code (NEC)

H. Uniform Building Code (UBC)

1.04 SYSTEM DESCRIPTION

A. The pallet storage and retrieval system is fully automated for the transferring of pallets into and out of lag storage. The system includes a AS/RS stacker crane, storage racks, inventory control system and shuttle cars. The storage system is computer controlled and tracks the material from the moment the pallet arrives at the pallet stand for pick-up. When the pallet arrives at the storage retrieval system, the bar code labels on the drums are read and entered into the PMS. The AS/RS stacker crane picks up the pallet and transfers it to a location preselected by the inventory control system for future processing. The inventory control system records the information and the location of the pallet. When a pallet is requested for processing or shipping, the operator selects the desired pallet and the control system directs the stacker crane to the location of the pallet and brings it to the pallet stand or transfer car. The inventory control system includes a control panet with panel display, a function keypad, and bar code scanner. Storage capacity is 182 drums.

B. Data Sheets

Equipment Tag Nos. WBS Area Location Numbers and equipment data sheets for this description are provided in **Appendix A.**

END OF SECTION

9147 1776 1473

WRAP MODULE 2A

APPENDIX A

EQUIPMENT/INSTRUMENT DATA SHEETS

WBS LOCATION	EQUIPMENT TAG	SERVICE
1108	CR-08-101	Automated Drum Storage/ Retrieval

9413227.0674

APRIL 1992

UE&C PROJECT NO. 6237.006

FILE NO. 14620 - A1

UNITED ENGINEERS & CONSTRUCTORS A Raytheon Company Western Operations	EQUIPMENT DATA SHEET ☒ CDR ☐ TITLE I ☐ TITLE II ☐ TITLE III	ITEM NUMBER CR-08-101	PAGE 1 OF 2
CUSTOMER & LOCATION DOE-RL/WHC HANFORD, WA	PROJECT WRAP FACILITY MODULE 2A	UE&C JOB NO. 6237.006 / ACCOUNT NO.	DATE: 04/20/92 / BY: JDC

REVISIONS (DATE & BY)	A		B		C		D	
	E		F		G		H	

SERVICE	MANUFACTURER	NO. REQ'D.	SOURCE OF QUOTE
DRUM STORAGE/RETRIEVAL		1	

STORAGE RACKS

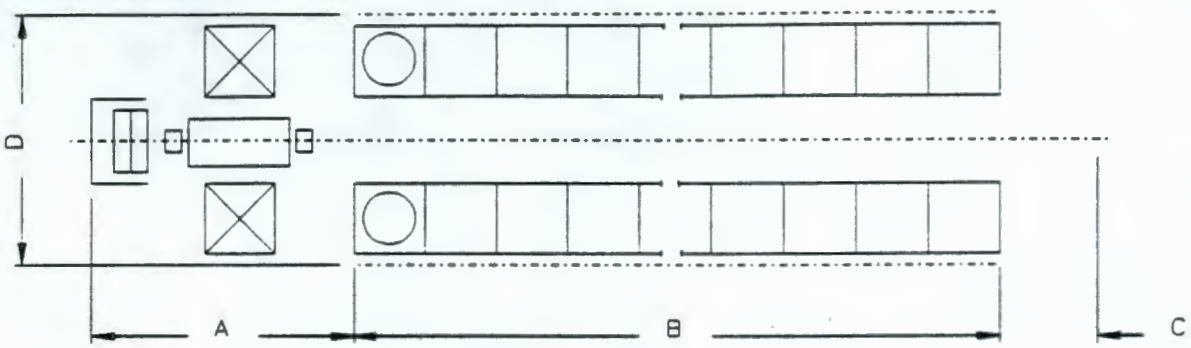

20 STORAGE BAYS LONG X 5 TIERS HIGH

CONDITIONS OF SERVICE		DIMENSIONS	
APPLICATION: STORE AND RETRIEVE WASTE DRUMS		A: 12.5'	E:
UNIT LOAD DESCRIPTION: 55 GALLON DRUMS		B: 46.5'	F:
UNIT LOAD SIZE: 22.5" DIA X 34.5" HIGH	ENVIRONMENT: COMPUTER	C: 6'	G:
UNIT LOAD WEIGHT: 3,000 LBS	FIRE PROTECTION: REQUIRED	D: 11'	H:
LOCATION: LAG STORAGE AREA	DUTY: 8 HOURS/DAY		
RATED CAPACITY: 4,000 LBS	SHUTTLE SPEED:		
STORAGE QUANTITY: 182 DRUMS	NEC AREA CLASS: UNCLASSIFIED		
CONSTRUCTION			
MATL. (ASTM): A36	RAILS/POWER SUPPLY: FESTOON		
TOTAL SYSTEM WIDTH: 11'	HANDLING EQUIPMENT: REQUIRED		
TOTAL SYSTEM LENGTH: 70'	SIGNAL COMM. METHOD: OPTICAL SPACE		
NEMA ENCLOSURE: 1	POWER FEED METHOD: INSULATED TROLLY WIRE		
S/R MACHINE: REQUIRED	SHIPPING WT.: 9,260 LBS		
AVAILABLE POWER (Volts/Phase/Hz): 460/3/60			

9413227.0675

UNITED ENGINEERS & CONSTRUCTORS A Raytheon Company Western Operations	EQUIPMENT DATA SHEET ☒ CDR ☐ TITLE I ☐ TITLE II ☐ TITLE III	ITEM NUMBER CR-08-101	PAGE 2 OF 2

CUSTOMER & LOCATION	PROJECT	UE&C JOB NO. 6237.006	DATE: 04/20/92
DOE-RL/WHC HANFORD, WA	WRAP FACILITY MODULE 2A	ACCOUNT NO.	BY: JDC

REVISIONS (DATE & BY)	A		B		C		D	
	E		F		G		H	

SERVICE	MANUFACTURER	NO. REQ'D.	SOURCE OF QUOTE
DRUM STORAGE/RETRIEVAL		1	

MAST

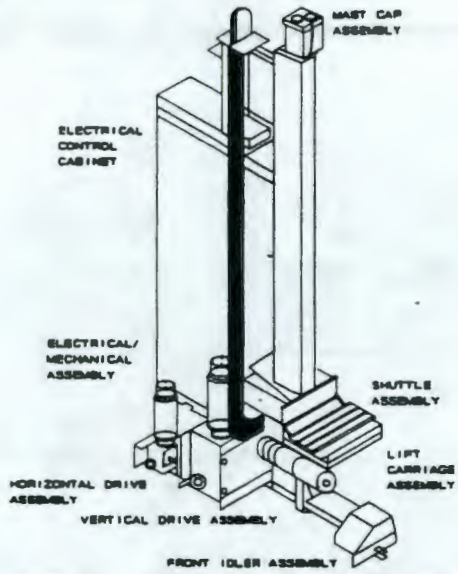

CONDITIONS OF SERVICE		DIMENSIONS	
APPLICATION: STORE AND RETRIEVE WASTE DRUMS		A:	E:
UNIT LOAD DESCRIPTION: 55 GAL DRUMS		B:	F:
UNIT LOAD SIZE: 22.5" DIA X 34.5" HIGH	DUTY: 8 HOURS/DAY	C:	G:
UNIT LOAD WEIGHT: 3,000 LBS	MAST HORIZONTAL SPEED: 210 FPM	D:	H:
LOCATION: LAG STORAGE AREA	MAST VERTICAL SPEED: 33 FPM		
RATED CAPACITY: 4,000 LBS	SHUTTLE SPEED: 66 FPM		
	NEC AREA CLASS: UNCLASSIFIED		
CONSTRUCTION			
MAST MATL. (ASTM): A36	CONTROL METHOD: QUICK FILE		
MAST TYPE: DOUBLE MAST	INVENTORY SYSTEM: QUICK FILE		
CARRIER LIFT MOTOR: 10 HP	BISYNCHRONOUS PROTOCOL: REQUIRED		
MAST MOTOR: 3 HP	LOAD REJECTION FUNCTION W/ALARM: REQUIRED		
SHUTTLE MOTOR: 1 HP	DUAL DISC STORAGE: REQUIRED		
TYPE OF CONTROL: AUTO/MANUAL	TAPE BACKUP: REQUIRED		
AVAILABLE POWER (Volts/Phase/Hz): 460/3/60			
NEMA ENCLOSURE: N/A			
POSITIONING ACCURACY: TBD			
BAR CODE READER: REQUIRED			

9413227.0676

WRAP MODULE 2A

DIVISION 15 - MECHANICAL

TABLE OF CONTENTS

SECTION	DESCRIPTION
15000	GENERAL MECHANICAL
15050	BASIC MECHANICAL, MATERIALS AND METHODS
15060	PIPING
15140	SUPPORTS AND ANCHORS
15160	PUMPS
15175	TANKS
15200	MIXERS/AGITATORS
15250	MECHANICAL INSULATION (HVAC)
15330	FIRE PROTECTION SPRINKLER SYSTEMS
15375	STANDPIPE AND HOSE SYSTEMS
15400	PLUMBING SYSTEMS
15450	PLUMBING FIXTURES AND EQUIPMENT
15481	COMPRESSED AIR SYSTEMS/BREATHING AIR
15575	STACKS (HVAC)
15682	WATER COOLED CHILLERS (HVAC)
15700	COOLING TOWER (HVAC)
15760	LIQUID HEAT TRANSFER (HVAC)
15800	AIR DISTRIBUTION (HVAC)
15855	AIR HANDLING UNITS (HVAC)
15860	RETURN AND EXHAUST FANS (HVAC)
15883	HEPA FILTER HOUSINGS
15900	CONTROLS AND INSTRUMENTATION (HVAC)
15990	TESTING AND BALANCING OF SYSTEMS (HVAC)

9413227.0677

THIS PAGE INTENTIONALLY
LEFT BLANK

SECTION 15000

9M 3227 0678

THIS PAGE INTENTIONALLY
LEFT BLANK

WRAP MODULE 2A

SPECIFICATION SECTION
FOR
15000 GENERAL MECHANICAL

TABLE OF CONTENTS

PART 1 GENERAL

1.01 SECTION SCOPE
1.02 RELATED SECTIONS
1.03 REFERENCES
1.04 SYSTEM DESCRIPTION
1.05 SUBMITTALS
1.06 DELIVERY, STORAGE AND HANDLING
1.07 SITE CONDITIONS

PART 2 PRODUCTS

2.01 MANUFACTURERS
2.02 MATERIALS
2.03 EQUIPMENT
2.04 COMPONENTS
2.05 FABRICATION
2.06 SHOP QUALITY CONTROL

PART 3 EXECUTION

3.01 PREPARATION
3.02 ERECTION, INSTALLATION AND APPLICATION
3.03 FIELD QUALITY CONTROL
3.04 ADJUSTING AND CLEANING
3.05 DEMONSTRATION
3.06 PROTECTION

9413227.0679

WRAP MODULE 2A

SECTION 15000

GENERAL MECHANICAL

PART 1 GENERAL

1.01 SECTION SCOPE

A. This specification establishes the requirements for detailed design, fabrication, installation, start-up, and acceptance testing of the mechanical equipment and provide other necessary safety items that are included in the work scope.

1.02 RELATED SECTIONS

1.03 REFERENCES

A. American National Standards Institute (ANSI)

B. American Society of Mechanical Engineers (ASME)
ASME Boiler and Pressure Vessel Code

C. American Welding Society (AWS)

D. National Electric Code (NEC)

E. Uniform Building Code

F. Uniform Mechanical Code

G. Uniform Plumbing Code

H. Uniform Fire Code

PART 2 PRODUCTS

2.02 MATERIALS

A. All materials and manufactured items shall be new and of first quality and shall be designed and furnished in strict accordance with all of the governing codes, ordinances and applicable standards.

9413227.0680

B. Equipment Manufacture: Equipment shall be of one manufacturer for each category of controls, valves, gages, dampers, HEPA filters and housings, package HVAC equipment.

C. Machinery Drives and Motors: Drives shall be designed for 150 percent of normal working capacity. Motors shall be designed with a 1.15 service factor.

D. Equipment Identification Tags: Brass or plastic equipment tags with 0.5 inch lettering shall be permanently attached to all equipment.

END OF SECTION

9413227.0681

THIS PAGE INTENTIONALLY
LEFT BLANK

SECTION 15050

94/3227.0682

THIS PAGE INTENTIONALLY
LEFT BLANK

THIS PAGE INTENTIONALLY
LEFT BLANK

WRAP MODULE 2A

SPECIFICATION SECTION
FOR
15050 BASIC MECHANICAL MATERIALS AND METHODS

TABLE OF CONTENTS

PART 1 GENERAL

1.01 SECTION SCOPE
1.02 RELATED SECTIONS
1.03 REFERENCES
1.04 SYSTEM DESCRIPTION
1.05 SUBMITTALS
1.06 DELIVERY, STORAGE AND HANDLING
1.07 SITE CONDITIONS

PART 2 PRODUCTS

2.01 MANUFACTURERS
2.02 MATERIALS
2.03 EQUIPMENT
2.04 COMPONENTS
2.05 FABRICATION
2.06 SHOP QUALITY CONTROL

PART 3 EXECUTION

3.01 PREPARATION
3.02 ERECTION, INSTALLATION AND APPLICATION
3.03 FIELD QUALITY CONTROL
3.04 ADJUSTING AND CLEANING
3.05 DEMONSTRATION
3.06 PROTECTION

WRAP MODULE 2A

SECTION 15050

BASIC MECHANICAL MATERIALS AND METHODS

PART 1 GENERAL

1.01 SECTION SCOPE

A. This specification establishes the requirements for detailed design, fabrication, installation, start-up, and acceptance testing of the mechanical equipment per basic mechanical materials and methods described in this section.

1.02 RELATED SECTIONS

1.03 REFERENCES

A. American National Standards Institute (ANSI)

B. American Society of Mechanical Engineers (ASME)

C. American Welding Society (AWS)

D. National Electric Code (NEC)

1.04 SYSTEM DESCRIPTION

A. General welding systems, general piping materials and methods and coordination of concrete work.

END OF SECTION

9413227.0804

SECTION 15060

THIS PAGE INTENTIONALLY
LEFT BLANK

94/3227.0685

THIS PAGE INTENTIONALLY
LEFT BLANK

WRAP MODULE 2A

SPECIFICATION SECTION
FOR
15060 PIPING MATERIAL AND VALVES

TABLE OF CONTENTS

PART 1 GENERAL

1.01 SECTION SCOPE
1.02 RELATED SECTIONS
1.03 REFERENCES
1.04 SYSTEM DESCRIPTION
1.05 SUBMITTALS
1.06 DELIVERY, STORAGE AND HANDLING
1.07 SITE CONDITIONS

PART 2 PRODUCTS

2.01 MANUFACTURERS
2.02 MATERIALS
2.03 EQUIPMENT
2.04 COMPONENTS
2.05 FABRICATION
2.06 SHOP QUALITY CONTROL

PART 3 EXECUTION

3.01 PREPARATION
3.02 ERECTION, INSTALLATION AND APPLICATION
3.03 FIELD QUALITY CONTROL
3.04 ADJUSTING AND CLEANING
3.05 DEMONSTRATION
3.06 PROTECTION

9413227.0686

WRAP MODULE 2A

SECTION 15060

PIPING MATERIAL AND VALVES

PART 1 GENERAL

1.01 SECTION SCOPE

A. This specification establishes the requirements for detailed design, fabrication, installation, start-up and acceptance testing of piping and valves for General Process, Secondary waste treatment, utilities aqueous make-up and chilled water piping systems.

1.02 RELATED SECTIONS

1.03 REFERENCES

A. American Society of Mechanical Engineers (ASME)

ASME Code B31.3, 1990	Chemical Plant and Petroleum Refinery Piping, March 15, 1990 Edition with November 7, 1990 Addenda for all Piping.

B. American National Standard Institute (ANSI)

ANSI/ASME B1.1	Unified Inch Screw Threads (UN and UNR Thread Form)
ANSI/ASME B1.20.1	Pipe Threads (except dry seal)
ANSI/ASME B18.2.1	Square and hex Bolts and Screws, Inch Series, Including Hex Cap Screws and Lag Screws
ANSI/ASME B18.2.2	Square and Hex Nuts
ANSI/ASME B16.5	Pipe Flanges and Flanged Fittings
ANSI/ASME B16.9	Factory-Made Wrought Steel Butt Welding Fittings
ANSI/ASME B16.10	Face-to-Face and End-to-End Dimensions of Ferrous Valves
ANSI/ASME B16.11	Forged Steel Fittings, Socket Welding and Threaded
ANSI/ASME B16.21	Nonmetallic Flat Gaskets for Pipe Flanges
ANSI/ASME B16.25	Butt Welding Ends
ANSI/ASME B16.34	Valves Flanged and Butt Welding Ends
ANSI/ASME B36.10M	Welded and Seamless Wrought Steel Pipe
ANSI/ASME B36.19M	Stainless Steel Pipe

9413227.0787

C. American Petroleum Institute (API)

API-598	Valve Inspection and Test
API-601	Metallic Gaskets for Raised-Face Pipe Flanges and Flanged Connections (Double-Jacketed Corrugated and Spiral-Wound)
API-602	Compact Carbon Steel Gate Valves

D. Manufacturers Standardization Society (MSS)

MSS-SP-6	Standard Finishes for Contact Faces of Pipe Flanges and Connecting-End Flanges of Valves and Fittings
MSS-SP-43	Wrought Stainless Steel Butt Welding fittings
MSS-SP-83	Carbon Steel Unions Socket-Welding and Threaded
MSS-SP-95	Swaged Nipples and Bull Plugs
MSS-SP-97	Forged Carbon Steel Branch Outlet Fittings, Socket Welding, Threaded and Butt Welding End

E. National Fire Protection Association (NFPA)

NFPA-30	Flammable and Conbustible Liquids Code

F. Occupational Safety and Health Administration (OSHA)

OSHA 29 CFR 1926/1910	All parts applicable to work being performed by subcontractor

1.04 SYSTEM DESCRIPTION

This specification covers piping and valves required to handle fluids for general process, secondary waste treatment, utilities, aqueous make up, polymer encapsulation and chilled water for WRAP2 facility at Hanford, WA. The general process, secondary waste treatment, aqueous make up, polymer encapsulation and chilled water systems support the non-thermal treatment of contact handled low level radioactive mixed waste. Treated solid wastes are packed, inspected certified and shipped for disposal. Radioactively contaminated liquid wastes are recycled for use in the treatment processes. The non-radioactively contaminated liquid wastes are collected separately for disposal. Utility piping system handles potable water, air and drains to support WRAP2 operations.

2.02 MATERIALS

A. All materials and manufactured items shall be new and of first quality and shall be designed and furnished in strict accordance with all of the governing codes, ordinances, and applicable standards.

B. Piping material for compressed air utility (sanitary drainage, AMU caustic feed and discharge and AMU process water), general process outside enclosures, aLl stabilization system except polymer resin and chemcial storage and polymer encapsulation, secondary waste process water, nonactive secondary waste, nonactive sump discharge and drain for secondary waste shall be:

1. Pipe: Seamless carbon steel ASTM 106, Grade B.

   a. 2 inches and smaller - threaded, or plain end Sch. 40

   b. 10 inches and smaller - Bevel ends, Sch. 40

   c. 12 inches and larger - Bevel ends, Std. Wt.

2. Fittings: 150# malleable iron Scrd. ASTM A 197 and ANSI B16.3 or 2000# ANSI forged carbon steel socket weld, ASTM A 105 and ANSI B16.11

   Size: 2 inches and smaller

3. Flanges

   a. 105# ANSI, raised face, forged carbon steel weld neck or socket weld, ASTM A 181 and ANSI B16.5

      Size: 2 inches and smaller

   b. 150# ANSI, raised face, forged carbon steel slip-on, ASTM A 105 and ANSI B16.5

      Size: 3 inches and larger

   c. 150# ANSI, raised face, forged carbon steel weld neck, ASTM A105 and ANSI B16.5

      Size: 3 inches and larger

6890.227.MG

4. Orifice Flanges: 300# ANSI, raised face, forged carbon steel, ASTM A 105 and ANSI B16.5 bored to match pipe

   Size: 2 inches to 8 inches

5. Flange Gaskets: 150# ANSI B 16.21, ring cut x 1/16 inch thick Grafoil, use 300# ANSI gaskets for orifice flanges

   Size: 0.5 inch to 24 inches

6. Flange Bolting: Chrome holy, stud bolt, threaded full length, two semi-finished heavy hex nuts each, ASTM A 193, Gr. B7, ASTM A 194, Gr. 2H, length and size in accordance with ANSI B16.5

   Size: 0.5 inch 24 inches

7. Valves

   a. 800# ANSI, forged steel, SW or BW, OS&Y, BB, Std. trim, grafoil packing and gaskets, double wedge ASTM A 105 -

      Size: 2 inches and smaller

   b. 150# ANSI cast steel, flanged, double disc, OS&Y, BB, Std. trim, grafoil packing and gaskets ASTM A 216

      Size: 2 inches and larger

   c. 150# ANSI, bronze, cast iron or malleable iron, screwed, OS&Y, BB, Std. trim, grafoil packing and gaskets, double wedge ASTM A 126

      All sizes

8. Globe Valves

   a. 800# ANSI, forged steel, SW, or BW, OS&Y, BB, Std. Trim, renewable disc and seat, Grafoil packing and seat ASTM A105

      Size: 2 inches and smaller

9413227.0690

b. 105# ANSI, Cast Steel, flanged, OS&Y, BB Std. trim, Grafoil packing and gaskets ASTM A 216

c. 105# ANSI, Bronze, cast iron or Malleable iron, scr'd. OS&Y, BB, Std. Trim, Grafoil packing and gaskets ASTM A 126

All sizes

9. Check Valves

a. 800# ANSI, SW or BW, piston or lift type, forged steel, Std. trim, Grafoil Gasket ASTM A 105

Size: 2 inches and smaller

b. 150# ANSI, flanged cast steel, swing type, bolted cap, Grafoil gasket ASTM A 216

Size: 3 inches and smaller

10. Ball Valves: 300# ANSI, cast steel body, scr'd or SW, 316 SST ball and stem, CS packing retainer and gland, TFE ball seal, Grafoil seal ring and stem packing, ASTM A 216

Size: 2 inches and smaller

C. Piping materials for general process inside enclosure, stabilization (polymer resin and chemical storage and polymer encapsulation), all utility piping for active liquid waste, active sump discharge and active drain, all AMU piping except process water and caustic fluid shall be:

1. Pipe: Stainless Steel, ASTM 312 Grade TP304L, Schedule 40S, Beveled Ends for BW, Plain Ends for SW, or Screwed

Size: 0.25 inch to 12 inches

2. Fittings

a. Seamless SST, BWE or SWE Ends, Sch. 40 (or 3000 psi) ASTM A 403, Grade WP304L and ANSI B16.9 or ASTM A 182 Grade F 304L and ANSI B16.11

9413227.0691

Size: 2 inches and smaller

b. Seamless SST, BWE, Sch. 40, ASTM A 403, Grade WP 304L and ANSI B16.9

All sizes

3. Flanges: 150# ANSI, RF, Slip-on, Weld Neck, or Lap Joint and Stub-End Forged 304L SST, ASTM A 182 Grade F 304L and ANSI B 16.5

4. Orifice Flanges: 300# ANSI, Raised Face Weld-Neck Type, Forged Stainless Steel with 0.5 inch Socket-weld Taps, Schedule 40S Bore, ASTM A 182, Grade F 304L and ANSI B 16.5

All sizes

5. Flange Gaskets: 150# ANSI, API-601, Spiral Wound Metallic Type, ASTM A 182 Grade F 304L, SST Spiral Windings with Grafoil Filler, 1/8 inches Thick 304 SST Centering Guide and Inner Ring, Inner Ring I.D. to match bore of flange. Use 300# ANSI gaskets for orifice flanges

All sizes

6. Flange Bolting: 304 SST Bolts ASTM A 193, GR B8 and Galling Resistant Nitronic 60 Nuts ASTM A 195 GR 8S (UNS S21800)

All sizes

7. Gate Valves

a. 150# ANSI, BW or SW Ends, OS&Y, bolted Bonnet, Double Wedge, Integral Seat, Body and bonnet 316L SST, Casting ASTM A 351, Grade CF3M, Forgings ASTM A 182, Grade F316L, Packing Grafoil, Bonnet Gasket Grafoil, Trim 316 SST

Size: 2 inches and smaller

b. 150# ANSI, BW Ends, OS&Y, Bolted Bonnet, Double Wedge, Integral Seat, Body and Bonnet 316L SST, Casting ASTM A 351, Grade CF3M, Forgings ASTM A 182, Grade F316L, Packing Grafoil, Bonnet Gasket Grafoil, Trim 316 SST

9413227.0692

Size: 2.5 inches and larger

c. 150# ANSI, RF, OS&Y, Bolted Bonnet, Double Wedge, Integral Seat, Body and bonnet 316 SST, Casting ASTM A 351, Grade CF8M, Forgings ASTM A 182, Grade F316, Packing Grafoil, Bonnet Gasket Grafoil, Trim 316 SST, end to end dimensions ANSI B16.10

Size: 0.5 inch and larger

8. Globe Valves

a. 150# ANSI, BW or SW Ends, OS&Y, Bolted Bonnet, body and bonnet 316L Stainless Steel, Integral Seat, Casting ASTM A 351, Grade CF3M, Forgings ASTM A 182, Grade F316L, 316 SST Trim, Grafoil Packing, Bonnet Gasket Grafoil

Size: 2 inches and smaller

b. 150# ANSI, BW Ends, OS&Y, Bolted Bonnet, Body and Bonnet 316L Stainless Steel, Integral Seat, Casting ASTM A 351, Grade CF3M, Forgings ASTM A 182, Grade F316L, 316-SST Trim, Packing Grafoil, Bonnet Gasket Grafoil

Size: 2.5 inches and larger

c. 150# ANSI, RF, OS&Y, Bolted Bonnet, body and bonnet 316 SST, Integral Seat, Casting ASTM A 351, Grade CF8M, Forgings ASTM A 182, Grade F316 SST trim, Packing Grafoil, Bonnet Gasket Grafoil, End to end dimensions ANSI B16.10

Size: 0.5 inch and larger

9. Check Valves

a. 150# ANSI, BW or SW Ends, OS&Y, Swing Type, Bolted Bonnet 316L, Stainless Steel, Integral Seat, Casting ASTM A 351, Grade CF3M, Forgings ASTM A 182, Grade F316L, Bonnet Gasket Grafoil, Trim 316 Stainless Steel

Size: 0.5 inch to 2 inches

b. 150# ANSI, BE Ends, OS&Y, Swing Type, Bolted Bonnet, Body and Bonnet 316L Stainless Steel,

94/3227.0693

Integral Seat, Casting ASTM A 351, Grade CF3M, Forgings ASTM A 182, Grade F316L, Bonnet Gasket Grafoil, Trim 316 Stainless Steel

Size: 0.5 inch and larger

c. 150# ANSI, RF, OS&Y, Swing Type, Bolted Bonnet, body and bonnet 316 SST, Integral Seat, Casting ASTM A 351, Grade CF8M, Forgings ASTM A 182, Grade F316, Bonnet Gasket Grafoil, Trim 316 SST, End to end dimensions ANSI B16.16

Size: 0.5 inch and larger

10. Ball Valves

a. 150# ANSI, BW or SW Ends, 3 piece, or Split body, Top Entry, Body 316L Stainless Steel, Casting ASTM A 351, Grade CF3M, Forgings ASTM A 182, Grade F316L, 316 SST Ball and stem, Seal and Gasket Grafoil, Trim 316 Stainless Steel, seats filled TFE

Size: 0.5 inch to 2 inches

b. 150# ANSI, BW Ends, 3 piece, or Split Body, Top Entry, Body 316L Stainless Steel, Casting ASTM A 351, Grade CF3M, Forgings ASTM A 182, Grade F316L, 316 SST Ball and stem, Seal and Gasket Grafoil, Seats filled TFE

Size: 2 inches and larger

c. 150# ANSI, RF, Body, Ball and Stem 316 SST, Castings ASTM 351, Grade VF8M, Forgings ASTM 182, Grade F316, Seal and Gasket Grafoil, Seats filled TFE

Size: 0.5 inch and larger

D. Utility Water (Potable Water) Materials

1. Tube: Seamless copper ASTM B88

a. 2 inches and smaller - hard drawn or soft drawn Type L or K Straight length or coil

9413227.0694

2. Fittings: Wrought Copper or Bronze Solder - type pressure fittings, ANSI B 16.22

   Size: 2 inches and smaller

3. Globe Valves: 150# class, Bronze, Renewable Composition Disc, Rising Stem, Union Bonnet, Solder joint Tubing End or Scrd., ASTM B 62

   Size: 2 inches and smaller

4. Check Valves: 125# class, Bronze, screwed in cap, Bronze Disc, Solder Joint Tubing End or Scrd., ASTM B62

   Size: 2 inches and smaller

5. Gate Valves: 125# class, Bronze, Double Wedge, Rising Stem Screwed in Bonnet, Solder Joint Tubing End or SCRD, ASTM B62

   Size: 2 inches and smaller

END OF SECTION

9413227.0695

SECTION 15140

94W3227.0696

THIS PAGE INTENTIONALLY
LEFT BLANK

THIS PAGE INTENTIONALLY
LEFT BLANK

WRAP MODULE 2A

SPECIFICATION SECTION
FOR
15140 SUPPORTS AND ANCHORS

TABLE OF CONTENTS

PART 1 GENERAL

1.01 SECTION SCOPE
1.02 RELATED SECTIONS
1.03 REFERENCES
1.04 SYSTEM DESCRIPTION
1.05 SUBMITTALS
1.06 DELIVERY, STORAGE AND HANDLING
1.07 SITE CONDITIONS

PART 2 PRODUCTS

2.01 MANUFACTURERS
2.02 MATERIALS
2.03 EQUIPMENT
2.04 COMPONENTS
2.05 FABRICATION
2.06 SHOP QUALITY CONTROL

PART 3 EXECUTION

3.01 PREPARATION
3.02 ERECTION, INSTALLATION AND APPLICATION
3.03 FIELD QUALITY CONTROL
3.04 ADJUSTING AND CLEANING
3.05 DEMONSTRATION
3.06 PROTECTION

APPENDIX

APPENDIX A DATA SHEETS

9413227.0697

WRAP MODULE 2A

SECTION 15140

SUPPORTS AND ANCHORS

PART 1 GENERAL

1.01 SECTION SCOPE

A. This specification establishes the requirements for detailed design, fabrication, installation, start-up, and acceptance testing of the supports and anchors as required in the contract drawings.

1.02 RELATED SECTIONS

A. Section 15050 - Basic Mechanical materials and Methods

1.03 REFERENCES

A. Manufacturers Standardization Society (MSS)

MSS SP-58	Design and manufacture of materials for pipe hangers and supports
MSS SP-69	Select and apply pipe hangers and supports
MSS SP-89	Fabricate and install pipe hangers and supports

1.04 SYSTEM DESCRIPTION

A. Supports and anchors furnished as part of factory fabricated equipment are a part of equipment assembly specified in other sections of Division 15.

PART 2 PRODUCTS

2.02 MATERIALS

A. All materials and manufactured items shall be new and of first quality and shall be designed and furnished in strict accordance with all of the governing codes, ordinances and applicable standards.

END OF SECTION

9413227.0698

SECTION 15160

94/3227.0699

THIS PAGE INTENTIONALLY
LEFT BLANK

WRAP MODULE 2A

SPECIFICATION SECTION
FOR
15160 PUMPS

TABLE OF CONTENTS

PART 1 GENERAL

1.01 SECTION SCOPE
1.02 RELATED SECTIONS
1.03 REFERENCES
1.04 SYSTEM DESCRIPTION
1.05 SUBMITTALS
1.06 DELIVERY, STORAGE AND HANDLING
1.07 SITE CONDITIONS

PART 2 PRODUCTS

2.01 MANUFACTURERS
2.02 MATERIALS
2.03 EQUIPMENT
2.04 COMPONENTS
2.05 FABRICATION
2.06 SHOP QUALITY CONTROL

PART 3 EXECUTION

3.01 PREPARATION
3.02 ERECTION, INSTALLATION AND APPLICATION
3.03 FIELD QUALITY CONTROL
3.04 ADJUSTING AND CLEANING
3.05 DEMONSTRATION
3.06 PROTECTION

APPENDIX

APPENDIX A DATA SHEETS

9413227.0700

WRAP MODULE 2A

SECTION 15160

PUMPS

PART 1 GENERAL

1.01 SECTION SCOPE

A. This specification establishes the requirements for detailed design, fabrication, installation, start-up, and acceptance testing of pumps and drivers for WRAP Module 2A Facility.

1.02 RELATED SECTIONS

1.03 REFERENCES

A. American National Standards Institute
ANSI — B73.1, Specification for Horizontal End Suction Centrifugal Pumps

B. Hydraulic Institute
HI — Standard for Centrifugal, Rotary and Reciprocating Pumps

C. National Electric Manufacturers Association
NEMA — Mg-1, Motors and Generators

1.04 SYSTEM DESCRIPTION

A. 1105 Polymer Immobilization and Solidification System: Pumps provided for transfer, mix, metering, dewatering and injection of polymer resins and related constituents.

B. 1104 Decontamination System Pumps for high pressure spray and low pressure drain returns.

C. 1106 Special Waste Treatment Wet Scrubber Recirculation Pump.

D. 1107 Secondary Waste Collection System: Pumps required for Recirculation and Delivery.

E. 1112 Aqueous Make-up System: Metering and Transfer Pumps for mixing and Delivery of Caustic, Acid and Decon Solutions.

9413227.0701

F. 1112 Process Chilled Water: Recirculation Pumps.

G. 1114 HVAC Chilled Water Pumps

H. Data Sheets

Equipment Tag Nos., WBS Area Location Numbers and equipment data sheets for this description are provided in **Appendix A.**

END OF SECTION

9413227.8702

WRAP MODULE 2A

APPENDIX A

EQUIPMENT/INSTRUMENT DATA SHEETS

WBS LOCATION	EQUIPMENT TAG	SERVICE
1105	P-05-301A,B	Solvent Transfer
1105	P-05-302	Extender Metering
1105	P-05-303A,B	Catalyst Metering
1105	P-05-304	Promoter Metering
1105	P-05-305A,B	VES Resin Transfer
1105	P-05-306	Bulk Storage Sump Pump
1105	P-05-401A,B	Mixed Polymer Pump
1105	P-05-402	Waste Waster Transfer (Vacuum Dewater Waste)
1105	P-05-307	Catalyst Sump Pump
1105	P-05-403	Vacuum Dewater Pump
1105	P-05-404	Hydrocarbon Waste Transfer
1105	P-05-405	Day Tank Sump Pump
1104	P-04-201	Decon Water Booster Pump
1104	P-04-210	Size Reduction and Repackage Area Sump Pump
1104	P-04-230	Special Waste Process Sump Pump
1104	P-04-240	Polymer Encapsulation Enclosure Sump Pump
1104	P-04-250	High Pressure Recirculation Sump
1104	P-04-251	Grout Area Sump Pump

9413227.0703

WRAP MODULE 2A

WBS LOCATION	EQUIPMENT TAG	SERVICE
1105	P-05-203	Excess Water Pump
1105	P-05-201	Vibro Grout Mixer/Pump
1106	P-06-301	Scrubber Recirculation Pump
1107	P-07-101A,B	Nonactive Waste Pumps
1107	P-07-102	Non-Active Sump Pump
1107	P-07-201	Active Waste Pump
1107	P-07-202	Active Sump Pump
1107	P-07-203	Treated Active Waste Pump
1112	P-12-101	Acid Drum Pump
1112	P-12-102	Acid Metering Pump
1112	P-12-103	Caustic Drum Pump
1112	P-12-104	Secondary Waste Treat Caustic Pump
1112	P-12-105	Chemical Scrubber Feed Pump
1112	P-12-106	Decon Solution Drum Pump
1112	P-12-107	Decon Solution Metering Pump
1112	P-12-501A,B	Active Process Chilled Water Pumps
1112	P-12-502 A,B	Nonactive Process Chilled Water Pumps
1105	P-05-308	Catalyst Drum Pump
1105	P-05-309	Promoter Drum Pump
1105	P-05-310	Solvent Drum Pump
1105	P-05-311	Extender Drum Pump
1106	P-06-302	Humidifier Condensate Pump

APRIL 1992 UE&C PROJECT NO. 6237.006

FILE NO. 15160 - A2

94122722.0704

WRAP MODULE 2A

WBS LOCATION	EQUIPMENT TAG	SERVICE
1114	P-14-101A,B	Secondary Chilled Water Pump
1114	P-14-102A,B	Primary Chilled Water Pump
1114	P-14-103A,B	Condenser Water Pump
1114	P-14-104	Heat Recovery Pump

9117227.0705

UNITED ENGINEERS & CONSTRUCTORS A Raytheon Company Western Operations	EQUIPMENT DATA SHEET ☒ CDR ☐ TITLE I ☐ TITLE II ☐ TITLE III	ITEM NUMBER P-06-301A,B	PAGE 1 OF 1
CUSTOMER & LOCATION DOE-RL/WHC HANFORD, WA	PROJECT WRAP FACILITY MODULE 2A	UE&C JOB NO. 6237.006	DATE: 04/08/92
		ACCOUNT NO.	BY: RLH

REVISIONS (DATE & BY)	A		B		C		D	
	E		F		G		H	

SERVICE SOLVENT TRANSFER PUMP	MANUFACTURER		SOURCE OF QUOTE	
NO. PUMPS REQ'D: 2	SIZE & TYPE:		NO. OF STAGES:	
NO. MOTORS REQ'D: 2	ITEM NO.:	PROVIDED BY:	MTD BY:	REF. PAGE:
NO. TURBINES REQ'D:	ITEM NO.:	PROVIDED BY:	MTD BY:	REF. PAGE:

CONDITIONS OF SERVICE, EACH PUMP				PERFORMANCE	
LIQUID: METHYLENE CHLORIDE				PROPOSAL CURVE NO.:	
GPM AT PT. NOR.: 10	RATED: 10	DISCH. PRESS: 20 PSIG		RPM:	NPSHR (WATER) (H.C.):
PT °F RATED: 60	MAX.:	SUCT. PRESS. PSIG: MAX.	RATED	EFF.:	BHP RATED: 0.16
SP GR. AT RATED PT.: 1.325	DIFF. PRES. PSI: 20			MAX. BHP RATED IMP:	
VAP. PRESS. AT RATED P. PSIA: 380 MM HG	DIFF. HEAD. FT: 35			MAX. HEAD RATED IMP: 30 FT	
VIS. AT RATED ☐ PT. ☐ CP:	NPSHA. FT:			MIN. CONTINUOUS GPM:	
CORR/EROS. CAUSED BY:	CORR ALLOW.:			ROTATION (VIEWED FROM CPLG END):	
COLD START TEMP °F:	SP GR:		& VIS:	COLD START GHP:	

CONSTRUCTION					SHOP TESTS
NOZZLES	SIZE	RATING	FACINGS	LOCATION	☒ NON-WIT. PERF. ☐ WIT. PERF.
SUCTION					☒ NON-WIT. HYDRO ☐ WIT. HYDRO
DISCHARGE					☐ NPSH REQ'D. ☐ WIT. NPSH
CASE-MOUNT	☐ CENTERLINE	☒ FOOT	☐ BRACKET	☐ VERT (TYPE)	☐ SHOP INSPECTION
CASE-SPLIT	☐ AXIAL	☐ RADIAL	TYPE SUCTION	☒ SGL ☐ DBL	☐ DISMANT. & INSP. AFTER TEST
CASE-PRESSURE	MAX. ALLOW: PSIG	CF	HYDRO TEST:	PSIG	☐ OTHER
CASE-CONNECT	☒ VENT	☒ DRAIN		☒ GAGE	
IMPELLER DIA.	RATED:	MAX.:	MIN.:	TYPE:	MATERIALS
IMPELLER MOUNT	☐ BETWEEN BRGS		☐ OVERHUNG		PUMP: CASE/TRIM CLASS: SS
BEARING-TYPE	RADIAL:		THRUST:		
LUBRICATION	☐ RING OIL ☐ FLOOD ☐ OIL MIST ☐ FLINGER ☐ PRESSURE ☒ GREASE				ASTM A296, CF-8
COUPLING	MFR:	MODEL:	☐ GUARD		
DRIVER HALF MTD BY	☐ PUMP MFR.	☐ DRIVER MFR.	☐ PURCHASER		
PACKING	MFR. & TYPE:		SIZE/NO OF RINGS:		
MECH SEAL	MFR. & MODEL:		API CLASS. CODE:		BASEPLATE: CS
	MFR. CODE:				VERTICAL PUMPS

AUXILIARIES								
C.W. PIPE PLAN API 610	☐CU	☐ SS	☐ CS	☐ TUBING	☐ PIPE	BY	PIT OR SLUMP DEPTH:	
TOTAL COOLING WATER	OF:	PSIG:	MAX.: A T	☐ SIGHT F 1 REQ'D			MIN. SUBMERGENCE REQ'D:	
PACKING COOLING INJECTION REQ'D	TOTAL GPM:			PSIG:			COLUMN ☐	☐ THREADED
SEAL FLUSH PLAN API 610	☐ CS	☐ SS	☐ TUBING	☐ PIPE	BY		LINE SHAFT ☐ OPEN	☐ ENCLOSED
EXTERNAL SEAL FLUSH FLUID			GPM	PSIG			BRGS BOWL	LINE SHAFT
AUXILIARY SEAL PLAN API 610	☐ CS	☐ SS	☐ TUBING	☐ PIPE	BY		BRG. LUBE ☐ PUMP FLUID	☐ OIL ☐ GREASE
AUX SEAL QUENCH FLUID							☐ STRAINER	

MOTOR DRIVER				
HP: 1/4	RPM:	FRAME:	VOLTS/PHASE/HZ 120/1/60	
MFR:	TYPE: SQUIRREL GAGE INDUCTION		NEMA DESIGN	PUMP THRUST LB UP DOWN
ENCLOSURE:	RATED AMBIENT TEMP 40° C		INSUL. CLASS	LENGTH BELOW MOUNTING FLANGE
ELEVATION FT	FULL LOAD AMPS		SPACE HEATERS	

APPROXIMATE WEIGHTS	PUMP & BASE 150	MOTOR:	GEAR:	TURBINE:

CODE REQUIREMENTS & SPECS:

REMARKS:
1. PRACTICALY NON-FLAMMABLE
2. AUTO IGNITION TEMP: 1139 DEGREES FAHRENHEIT
3. FLAMMABLE LIMITS IN AIR 12% LOWER, 19% UPPER

9413227.0706

UNITED ENGINEERS & CONSTRUCTORS
A Raytheon Company
Western Operations

EQUIPMENT DATA SHEET

☒ CDR ☐ TITLE I ☐ TITLE II ☐ TITLE III

ITEM NUMBER: P-05-302

PAGE: 1 OF 1

CUSTOMER & LOCATION: DOE-RL/WHC HANFORD, WA

PROJECT: WRAP FACILITY MODULE 2A

UE&C JOB NO.: 6237.006

DATE: 04/08/92

ACCOUNT NO.:

BY: RLH

REVISIONS (DATE & BY): A | B | C | D | E | F | G | H

SERVICE: EXTENDER METERING PUMP

MANUFACTURER:

NO. REQ'D: 1

SOURCE OF QUOTE:

TYPE PUMP: PLUNGER ☐ DIAPHRAGM ☒ DIRECT ACTING ☐ POWER FRAME ☐

METERING HEADS: SIMPLEX ☒ DUPLEX ☐ TRIPLEX ☐ HEAD GANG ☐

* USE SEPARATE DATA SHEET FOR EACH LIQUID END

MATERIALS

LIQUID END: SS ASTM A 296, CF-8
PLUNGER:
CROSS HEAD:
CONN.ROD:
CRANK:
GEAR (DRIVER):
GEAR (DRIVEN):
GEAR HOUSING:
FRAME:
VALVES:
VALVE SEATS:
VALVE BODY:
PACKING: MAX. TEMP. °F
GASKETS:
DIAPHRAGM: SS MAX. TEMP. °F
LAND:
LANTERN RING:
VALVE CAPS:

CONNECTIONS

	SIZE	TYPE	RATING
SUCTION			
DISCHARGE			
DRAINS			
FLUSHING			

AIR OR GAS PURGING YES ☐ NO ☐
VALVES REPLACEABLE YES ☐ NO ☐

LIQUID END

LIQUID END BODY: TYPE (PLUNGER) (DIAPHRAGM) (REMOTE) (SUBMERGED)
PLUNGER DIAM STROKE
STROKES/MIN/CYLINDER
S.W.P. W/QUOTED DRIVER SWP W/MAX. DRIVER

VALVES	SUCTION	DISCHARGE
TYPE		
NUMBER		
AREA IN.²		

PLUNGER SUPPORT (PACKING) (CROSS HEAD)
PACKING SIZE TYPE
SPECIAL SEALS

LUBRICATION

PACING DRIVER BRGS.
CONN.ROD BRGS.
CROSS HEAD GEARING
POWER CYLINDER
HYDRAULIC FLUID (DIAPHRAGM PLUNGER PUMP)

STROKE ADJUSTMENT

MANUAL ☐ AUTO ☒ WHILE RUNNING ☒ OR STOPPED ☐
REMOTE ☐ LOCAL ☐
SIGNAL: PNEUMATIC ☐ ELECTRIC ☒ HYDRAULIC ☐

AUXILIARY FEATURES

JACKETED ☐ STROKE COUNTER ☐
TIMER & MULTIPORT VALVE ☐ SPARE PACKING ☐

DRIVE

ELECTRIC ☒ GAS ☐ AIR ☐ BHP
MAKE CONSTANT SPEED ☒ VAR. SPEED ☐
RPM PHASE 1 FRAME NO.
ENCLOSURE FRAME NO.
FULL LOAD CURRENT LOCKED ROTOR CURRENT
POWER CYLINDER: DIAM. STROKE
GAS PRESS. SUPPLY EXHAUST
GAS CONSUMPTION SCFM @ M

SPEED CONTROL ELECT. ☐ PNEUMATIC ☐ MANUAL ☐
AUTOMATIC ☐ NONE ☒
SPEED REDUCER: MFR. INTEG. ☐ SEPARATE ☐
MODEL RATIO CLASS.
COUPLING: MAKE TYPE
GUARDS: COUPLING ☐ CRANK ☐
SPEED INDIC. YES ☐ NO ☐ REMOTE ☐ LOCAL ☐

SERVICE CONDITIONS

LIQUID END NO. LIQ. STYRENE (ACID) (BASIC)
PUMPING TEMP. 60 °F. VAPOR PRESS. @ P.T. 3 mm Hg
VISCOSITY 0.8 C.P. SPECIFIC GRAVITY 0.91
CORROSION OR EROSION FACTORS NO COPPER OR COPPER ALLOY
CAPACITY GPH: MAX. MIN. NORM. 180
SUCT. PRESS. PSIG: MAX. MIN. NORM. 0
DISCH. PRESS. PSIG: MAX. MIN. NORM. 20
NPSH AVAILABLE REQ'D.
BHP @ RATING 0.06
BASE PLATE
TEST: HYD. ☐ PERF. ☒ WITNESSED ☐ NOT WITNESSED ☒

REMARKS:
FLASHPOINT: 88 DEGREES FAHRENHEIT
AUTOIGNITION TEMP: 914 DEGREES FAHRENHEIT
FLAMMABLE LIMIT IN AIR: 1.1 VOL % AT 82 DEGREES FAHRENHEIT (LOWER)
6.1 VOL % AT 82 DEGREES FAHRENHEIT (UPPER)
FOR COST ESTIMATE MATERIAL IN CONTACT WITH PUMPED FLUID: SS ASTM A296, CF-8
WEIGHT: 100 LBS

9413227.0707

UNITED ENGINEERS & CONSTRUCTORS
A Raytheon Company
Western Operations

EQUIPMENT DATA SHEET

☒ CDR ☐ TITLE I ☐ TITLE II ☐ TITLE III

ITEM NUMBER: P-05-303A,B

PAGE: 1 OF 1

CUSTOMER & LOCATION: DOE-RL/WHC HANFORD, WA

PROJECT: WRAP FACILITY MODULE 2A

UE&C JOB NO.: 6237.006

DATE: 04/08/92

ACCOUNT NO.:

BY: RLH

REVISIONS (DATE & BY): A | B | C | D | E | F | G | H

SERVICE: CATALYST METERING PUMP

MANUFACTURER:

NO. REQ'D: 2

SOURCE OF QUOTE:

TYPE PUMP: PLUNGER ☐ DIAPHRAGM ☒ DIRECT ACTING ☐ POWER FRAME ☐

METERING HEADS: SIMPLEX ☐ DUPLEX ☐ TRIPLEX ☐ HEAD GANG ☐

* USE SEPARATE DATA SHEET FOR EACH LIQUID END

MATERIALS

LIQUID END: SS
PLUNGER:
CROSS HEAD:
CONN.ROD:
CRANK:
GEAR (DRIVER):
GEAR (DRIVEN):
GEAR HOUSING:
FRAME:
VALVES:
VALVE SEATS:
VALVE BODY:
PACKING: MAX. TEMP. °F:
GASKETS:
DIAPHRAGM: SS MAX. TEMP. °F:
LAND:
LANTERN RING:
VALVE CAPS:

CONNECTIONS

	SIZE	TYPE	RATING
SUCTION			
DISCHARGE			
DRAINS			
FLUSHING			

AIR OR GAS PURGING YES ☐ NO ☐
VALVES REPLACEABLE YES ☐ NO ☐

LIQUID END

LIQUID END BODY: TYPE (PLUNGER) (DIAPHRAGM) (REMOTE) (SUBMERGED)

PLUNGER DIAM: STROKE:
STROKES/MIN/CYLINDER:
S.W.P.: W/QUOTED DRIVER SWP: W/MAX. DRIVER

VALVES	SUCTION	DISCHARGE
TYPE		
NUMBER		
AREA IN.²		

PLUNGER SUPPORT: (PACKING): (CROSS HEAD):
PACKING SIZE: TYPE:
SPECIAL SEALS:

LUBRICATION

PACING: DRIVER BRGS.:
CONN.ROD BRGS.:
CROSS HEAD: GEARING:
POWER CYLINDER:
HYDRAULIC FLUID (DIAPHRAGM PLUNGER PUMP):

STROKE ADJUSTMENT

MANUAL ☐ AUTO ☒ WHILE RUNNING ☒ OR STOPPED ☐
REMOTE ☐ LOCAL ☐
SIGNAL: PNEUMATIC ☐ ELECTRIC ☒ HYDRAULIC ☐

AUXILIARY FEATURES

JACKETED ☐ STROKE COUNTER ☐
TIMER & MULTIPORT VALVE ☐ SPARE PACKING ☐

DRIVE

ELECTRIC ☒ GAS ☐ AIR ☐ BHP:
MAKE: CONSTANT SPEED ☒ VAR. SPEED ☐
RPM: PHASE: 1 FRAME NO.:
ENCLOSURE: FRAME NO.:
FULL LOAD CURRENT: LOCKED ROTOR CURRENT:
POWER CYLINDER: DIAM.: STROKE:
GAS PRESS. SUPPLY: EXHAUST:
GAS CONSUMPTION: SCFM @ MAX. SPEED

SPEED CONTROL ELECT. ☐ PNEUMATIC ☐ MANUAL ☐
AUTOMATIC ☐ NONE ☐
SPEED REDUCER: MFR.: INTEG. ☐ SEPARATE ☐
MODEL: RATIO: CLASS.:
COUPLING: MAKE: TYPE:
GUARDS: COUPLING ☐ CRANK ☐
SPEED INDIC. YES ☐ NO ☐ REMOTE ☐ LOCAL ☐

SERVICE CONDITIONS

LIQUID END NO.: LIQ.: HYDROGEN PEROXIDE (1) (ACID) (BASIC)
PUMPING TEMP.: 60 °F. VAPOR PRESS. @ P.T.:
VISCOSITY: 1.11 C.P. SPECIFIC GRAVITY: 1.13
CORROSION OR EROSION FACTORS: USE STAINLESS (WETTED PARTS)
CAPACITY GPH: MAX.: MIN.: NORM.: 6
SUCT. PRESS. PSIG: MAX.: MIN.: NORM.: 0
DISCH. PRESS. PSIG: MAX.: MIN.: NORM.: 50
NPSH AVAILABLE: REQ'D.:
BHP @ RATING: 0.01
BASE PLATE: CD
TEST: HYD. ☐ PERF. ☒ WITNESSED ☐ NOT WITNESSED ☒

REMARKS:
(1) 35 WT % HYDROGEN PEROXIDE IN WATER
FOR COST ESTIMATE MATERIAL IN CONTACT WITH PUMPED FLUID IS ASTM A296, CF-8.
(2) PUMP WEIGHT:

9413227.0708

UNITED ENGINEERS & CONSTRUCTORS
A Raytheon Company
Western Operations

EQUIPMENT DATA SHEET

☒ CDR ☐ TITLE I ☐ TITLE II ☐ TITLE III

ITEM NUMBER: P-05-304

PAGE: 1 OF 1

CUSTOMER & LOCATION: DOE-RL/WHC HANFORD, WA

PROJECT: WRAP FACILITY MODULE 2A

UE&C JOB NO.: 6237.006

DATE: 04/08/92

ACCOUNT NO.:

BY: RLH

REVISIONS (DATE & BY)								
A	04/17/92	RLH	B	4/29/92	RLH	C		D
E			F			G		H

SERVICE: PROMOTER METERING PUMP

MANUFACTURER:

NO. REQ'D: 1

SOURCE OF QUOTE:

TYPE PUMP: PLUNGER ☐ DIAPHRAGM ☒ DIRECT ACTING ☐ POWER FRAME ☐

METERING HEADS: SIMPLEX ☐ DUPLEX ☐ TRIPLEX ☐ HEAD GANG ☐

* USE SEPARATE DATA SHEET FOR EACH LIQUID END

MATERIALS

LIQUID END:
PLUNGER:
CROSS HEAD:
CONN. ROD:
CRANK:
GEAR (DRIVER):
GEAR (DRIVEN):
GEAR HOUSING:
FRAME:
VALVES:
VALVE SEATS:
VALVE BODY:
PACKING: MAX. TEMP. °F
GASKETS:
DIAPHRAGM: MAX. TEMP. °F
LAND:
LANTERN RING:
VALVE CAPS:

CONNECTIONS

	SIZE	TYPE	RATING
SUCTION			
DISCHARGE			
DRAINS			
FLUSHING			

AIR OR GAS PURGING YES ☐ NO ☐

VALVES REPLACEABLE YES ☐ NO ☐

LIQUID END

LIQUID END BODY: TYPE (PLUNGER) (DIAPHRAGM) (REMOTE) (SUBMERGED)

PLUNGER DIAM STROKE

STROKES/MIN/CYLINDER

S.W.P. W/QUOTED DRIVER SWP W/MAX. DRIVER

VALVES	SUCTION	DISCHARGE
TYPE		
NUMBER		
AREA IN.²		

PLUNGER SUPPORT (PACKING) (CROSS HEAD)

PACKING SIZE TYPE

SPECIAL SEALS

LUBRICATION

PACING: DRIVER BRGS.:
CONN. ROD BRGS.:
CROSS HEAD: GEARING:
POWER CYLINDER:
HYDRAULIC FLUID (DIAPHRAGM PLUNGER PUMP):

STROKE ADJUSTMENT

MANUAL ☐ AUTO ☐ WHILE RUNNING ☐ OR STOPPED ☐
REMOTE ☐ LOCAL ☐
SIGNAL: PNEUMATIC ☐ ELECTRIC ☐ HYDRAULIC ☐

AUXILIARY FEATURES

JACKETED ☐ STROKE COUNTER ☐
TIMER & MULTIPORT VALVE ☐ SPARE PACKING ☐

DRIVE

ELECTRIC ☐ GAS ☐ AIR ☐ BHP
MAKE: CONSTANT SPEED ☐ VAR. SPEED ☐
RPM: PHASE: FRAME NO.:
ENCLOSURE: FRAME NO.:
FULL LOAD CURRENT: LOCKED ROTOR CURRENT:
POWER CYLINDER: DIAM. STROKE
GAS PRESS. SUPPLY: EXHAUST:
GAS CONSUMPTION: SCFM @ MAX. SPEED

SPEED CONTROL ELECT. ☐ PNEUMATIC ☐ MANUAL ☐
AUTOMATIC ☐ NONE ☐
SPEED REDUCER: MFR. INTEG. ☐ SEPARATE ☐
MODEL RATIO CLASS.
COUPLING: MAKE TYPE
GUARDS: COUPLING ☐ CRANK ☐
SPEED INDIC. YES ☐ NO ☐ REMOTE ☐ LOCAL ☐

SERVICE CONDITIONS

LIQUID END NO.: LIQ.: COBALT NAPHTHEMATE (ACID)(BASIC)
PUMPING TEMP.: 60 °F. VAPOR PRESS. @ P.T.:
VISCOSITY: C.P. SPECIFIC GRAVITY: 0.94
CORROSION OR EROSION FACTORS: USE STAINLESS (WETTED PARTS)
CAPACITY GPH: MAX. MIN. NORM. 30
SUCT. PRESS. PSIG: MAX. MIN. NORM. 0
DISCH. PRESS. PSIG: MAX. MIN. NORM. 20
NPSH AVAILABLE REQ'D.
BHP @ RATING 0.01
BASE PLATE
TEST: HYD. ☐ PERF. ☐ WITNESSED ☐ NOT WITNESSED ☐

REMARKS:

9413227.0209

UNITED ENGINEERS & CONSTRUCTORS A Raytheon Company Western Operations	EQUIPMENT DATA SHEET ☒ CDR ☐ TITLE I ☐ TITLE II ☐ TITLE III	ITEM NUMBER P-05-305A,B	PAGE 1 OF 1
CUSTOMER & LOCATION: DOE-RL/WHC HANFORD, WA	PROJECT: WRAP FACILITY MODULE 2A	S-R JOB/INQUIRY NO. 6237.006	DATE: 04/08/92
		ACCOUNT NO.	BY: RLH

REVISIONS (DATE & BY)	A	04/17/92	RLH	B		C		D	
	E			F		G		H	

SERVICE: VES RESIN TRANSFER PUMP — NO. REQ'D: 2

MANUFACTURER: — SOURCE OF QUOTE:

MODEL & TYPE: — TURBINE DRIVEN: — MOTOR DRIVEN:

CONDITIONS OF SERVICE

CONDITIONS SHOWN FOR TOTAL REQUIRED SERVICE			TOTAL OPERATING PUMPS REQUIRED AND SPARE PUMPS	
PUMPING TEMP: 60 °F	SUCTION: 0 PSIG		NPSH AVAIL:	NSPH REQ'D (WATER):
CAPACITY @ P.T.: 30 GPM	DISCHARGE: 50 PSIG		RPM:	EFF.:
SPEC. GR. @ P.T.: 1.03	DIFFERENTIAL: 50 PSI		BHP @ RATING: 1.09	MAX. BHP FOR FRAME:
VISCOS. @ P.T.: 130 CP SSU	HEAD: 118.6 FT.		RECOMMENDED HP DRIVEN: 1.5	
V.P. @ P.T.: PSIA	HYDRAULIC HP:		FLUID: VINYL ESTER STYRENE	

MATERIALS	GRTNNELL HARDNESS	CONSTRUCTION
OUTER CASE: SS		CASE SWP: PSIG @ °F HYD. TEST (MAX.) PSIG
SIDE PLATE:		MIN. THICKNESS: IN. CORR. ALLOW:
LINER:		SUPPORT TYPE: SPLIT ☐ HORIZ. ☐12 VERT.
ROTOR OR GEARS:		ROTOR OR GEAR OVERHUNG: ☐ YES ☐ NO
ROTATING VANE:		DIAMETER SIZE: IN. TYPE:
IDLER:		TYPE GEAR: ☐ SPUR ☐ HELICAL ☐ HERRING BONE
TIMING GEAR:		ROTATION FACING PUMP CPLG.: (CW:CCW)
GASKETS:		RELIEF VALVES ☐ INT. ☐ EXT. PRESS. SETTING: PSIG
STUDS & NUTS:		CLEARANCE (DIAM.): IN. SIDE PLATE: IN.
SHAFT:		COUPLING MTR. ☐ SINGLE ☐ SPACER GUARD
SHAFT SLEEVES:		STUFFING BOXES BORE: IN. DEPTH:
STUFFING BOX:		JACKETED: ☐ YES ☐ NO SMOTHERING GLAND: ☐ YES ☐ NO
PACKING GLAND:		PACKING NO. RINGS: SIZE: IN. SQ.: IN. I.D.:
GLAND STUDS:		MECH. SEAL MAKE & TYPE:
LANTERN RING:		MAT'L ROT. FACE: STAT. FACE: SEAL GASK:
THROAT BUSHING:		BASE PLATE TYPE:

BEARINGS

THRUST: ☐ BALL:SLEEVE ☐ OIL GREASE ☐ INT EXT TYPE

RADIAL: ☐ BALL:SLEEVE ☐ OIL GREASE ☐ INT EXT TYPE

SPEED REDUCER

MAKE:

CASE MAT'L: GEAR MAT'L:

TYPE: CLASS:

SPEED RATO: SERVICE FACTOR:

COOLING WATER

THRUST BRG.: ☐ YES ☐ NO GPM

RADIAL BRG.: ☐ YES ☐ NO GPM

STUFF. BOX: ☐ YES ☐ NO GPM

CONNECTIONS

NOZZLES	SIZE	RATING	FACING	LOCATION
SUCTION				
DISCH.				
VENTS				
DRAINS				
COOL. WTR.				

DRIVER

MOTOR	TURBINE
MAKE:	MAKE:
ENCLOSURE:	TYPE:
FRAME NO.:	HP: RPM:
HP: 1.5 RPM:	PRESS. @ THROTTLE: PSIG
VOLTS: PHASE: CYCLES:	TEMP.: °F
START (LOW VOLT: X LINE):	EXHAUST PRESS.:
BRG. TYPE:	WATER RATE:
BRG. LUBE:	NO. HAND VALVES:

DRAWINGS

SERIAL NUMBER:

PERFORMANCE CURVE:

OUTLINE DRAWING:

CROSS SECT. DWG. OR BULLETIN # & PAGE #:

TESTING

WITNESS PERF. TEST: ☐ YES ☒ NO

WITNESS HYDRO TEST: ☐ YES ☒ NO

SUBMERGENCE TEST: ☐ YES ☒ NO

WTS. PUMP: LBS. BASE: LBS. DRIVER: LBS.

REMARKS: FLASHPOINT: 73-100°F
POS. DISP. GEAR

9413227.0710

UNITED ENGINEERS & CONSTRUCTORS A Raytheon Company Western Operations	EQUIPMENT DATA SHEET ☒ CDR ☐ TITLE I ☐ TITLE II ☐ TITLE III	ITEM NUMBER P-05-306	PAGE 1 OF 1

CUSTOMER & LOCATION	PROJECT	UE&C JOB NO. 6237.006	DATE: 05/12/92
DOE-RL/WHC HANFORD, WA	WRAP FACILITY MODULE 2A	ACCOUNT NO.	BY: RLH

REVISIONS (DATE & BY)	A		B		C		D	
	E		F		G		H	

SERVICE BULK STORAGE SUMP PUMP	MANUFACTURER	SOURCE OF QUOTE

NO. PUMPS REQ'D:	SIZE & TYPE:		NO. OF STAGES:	
NO. MOTORS REQ'D:	ITEM NO.:	PROVIDED BY:	MTD BY:	REF. PAGE:
NO. TURBINES REQ'D:	ITEM NO.:	PROVIDED BY:	MTD BY:	REF. PAGE:

CONDITIONS OF SERVICE, EACH PUMP

LIQUID: HYDROCARBON WASTE LIQUID			
GPM AT PT. NOR.:	RATED: 20	DISCH. PRESS: 10 PSIG	
PT °F RATED: 60 MAX. 110	SUCT. PRESS. PSIG: MAX. 0 RATED		
SP GR. AT RATED PT.: 1.325	DIFF. PRES. PSI: 10		
VAP. PRESS. AT RATED P.: 380 MM HG	DIFF. HEAD. FT:		
VIS. AT RATED: ☐ PT. ☐ CP:	NPSHA. FT:		
CORR/EROS. CAUSED BY:	CORR ALLOW.:		
COLD START TEMP °F:	SP GR:	& VIS:	

PERFORMANCE

PROPOSAL CURVE NO.:	
RPM:	NPSHR (WATER) (H.C.)
EFF.:	BHP RATED: 0.16
MAX. BHP RATED IMP:	
MAX. HEAD RATED IMP: 30 FT	
MIN. CONTINUOUS GPM:	
ROTATION (VIEWED FROM CPLG END):	
COLD START GHP:	

CONSTRUCTION

NOZZLES	SIZE	RATING	FACINGS	LOCATION
SUCTION				
DISCHARGE				

CASE-MOUNT	☐ CENTERLINE	☐ FOOT	☐ BRACKET	☐ VERT (TYPE)
CASE-SPLIT	☐ AXIAL	☐ RADIAL	TYPE SUCTION	☐ SGL ☐ DBL
CASE-PRESSURE	MAX. ALLOW: PSIG CF	HYDRO TEST: PSIG		
CASE-CONNECT	☐ VENT	☐ DRAIN	☐ GAGE	
IMPELLER DIA.	RATED:	MAX.:	MIN.:	TYPE:
IMPELLER MOUNT	☐ BETWEEN BRGS	☐ OVERHUNG		
BEARING-TYPE	RADIAL:	THRUST:		
LUBRICATION	☐ RING OIL ☐ FLOOD ☐ OIL MIST ☐ FLINGER ☐ PRESSURE ☐ GREASE			
COUPLING	MFR	MODEL	☐ GUARD	
DRIVER HALF MTD BY	☐ PUMP MFR.	☐ DRIVER MFR.	☐ PURCHASER	
PACKING	MFR. & TYPE:	SIZE/NO OF RINGS:		
MECH SEAL	MFR. & MODEL:	API CLASS. CODE:		
	MFR. CODE:			

SHOP TESTS

☐ NON-WIT. PERF. ☐ WIT. PERF.
☐ NON-WIT. HYDRO ☐ WIT. HYDRO
☐ NPSH REQ'D. ☐ WIT. NPSH
☐ SHOP INSPECTION
☐ DISMANT. & INSP. AFTER TEST
☐ OTHER

MATERIALS

PUMP: CASE/TRIM CLASS:

AUXILIARIES

C.W. PIPE PLAN API 610	☐CU ☐ SS ☐ CS ☐ TUBING ☐ PIPE BY			
TOTAL COOLING WATER	OF	PSIG	MAX A T	☐ SIGHT F 1 REQ'D
PACKING COOLING INJECTION REQ'D	TOTAL GPM	PSIG		
SEAL FLUSH PLAN API 610	☐ CS ☐ SS ☐ TUBING ☐ PIPE BY			
EXTERNAL SEAL FLUSH FLUID	GPM	PSIG		
AUXILIARY SEAL PLAN API 610	☐ CS ☐ SS ☐ TUBING ☐ PIPE BY			
AUX SEAL QUENCH FLUID:				

VERTICAL PUMPS

PIT OR SLUMP DEPTH:		
MIN. SUBMERGENCE REQ'D:		
COLUMN	☐	☐ THREADED
LINE SHAFT	☐ OPEN	☐ ENCLOSED
BRGS	BOWL	LINE SHAFT
BRG. LUBE	☐ PUMP FLUID	☐ OIL ☐ GREASE
☐ STRAINER		

MOTOR DRIVER

HP: 0.25	RPM:	FRAME:	VOLTS/PHASE/HZ:
MFR:	TYPE: SQUIRREL GAGE INDUCTION	NEMA DESIGN	
ENCLOSURE:	RATED AMBIENT TEMP 40° C	INSUL. CLASS	
ELEVATION: FT	FULL LOAD AMPS	SPACE HEATERS	

PUMP THRUST: LB UP DOWN

LENGTH BELOW MOUNTING FLANGE:

APPROXIMATE WEIGHTS	PUMP & BASE	MOTOR:	GEAR:	TURBINE:

CODE REQUIREMENTS & SPECS:

REMARKS:

UNITED ENGINEERS & CONSTRUCTORS
A Raytheon Company
Western Operations

EQUIPMENT DATA SHEET

☒ CDR ☐ TITLE I ☐ TITLE II ☐ TITLE III

ITEM NUMBER	PAGE
P-05-307	1 OF 1

CUSTOMER & LOCATION	PROJECT	UE&C JOB NO.	DATE: 06/12/92
DOE-RL/WHC HANFORD, WA	WRAP FACILITY MODULE 2A	6237.006	
		ACCOUNT NO.	BY: RLH

REVISIONS (DATE & BY)	A		B		C		D	
	E		F		G		H	

SERVICE	MANUFACTURER	SOURCE OF QUOTE
CATALYST SUMP PUMP		

NO. PUMPS REQ'D:	SIZE & TYPE:		NO. OF STAGES:	
NO. MOTORS REQ'D:	ITEM NO.:	PROVIDED BY:	MTD BY:	REF. PAGE:
NO. TURBINES REQ'D:	ITEM NO.:	PROVIDED BY:	MTD BY:	REF. PAGE:

CONDITIONS OF SERVICE EACH PUMP

LIQUID: 35 WT % HYDROGEN PEROXIDE IN WATER			
GPM AT PT. NOR.:	RATED: 10	DISCH. PRESS: 20 PSIG	
PT °F RATED: 60	MAX. 110	SUCT. PRESS. PSIG: MAX. 0 RATED	
SP GR. AT RATED PT.: 1.13	DIFF. PRES. PSI: 20		
VAP. PRESS. AT RATED P.:	DIFF. HEAD. FT:		
VIS. AT RATED: ☐ PT. ☒ CP: 1.11	NPSHA. FT:		
CORR/EROS. CAUSED BY:	CORR ALLOW.:		
COLD START TEMP °F:	SP GR:	& VIS:	

PERFORMANCE

PROPOSAL CURVE NO.:	
RPM:	NPSHR (WATER) (H.C.)
EFF.:	BHP RATED: 0.16
MAX. BHP RATED IMP:	
MAX. HEAD RATED IMP: 30 FT	
MIN. CONTINUOUS GPM:	
ROTATION (VIEWED FROM CPLG END):	
COLD START GHP:	

CONSTRUCTION

NOZZLES	SIZE	RATING	FACINGS	LOCATION
SUCTION				
DISCHARGE				

CASE-MOUNT	☐ CENTERLINE	☐ FOOT	☐ BRACKET	☐ VERT (TYPE)
CASE-SPLIT	☐ AXIAL	☐ RADIAL	TYPE SUCTION	☐ SGL ☐ DBL
CASE-PRESSURE	MAX. ALLOW: PSIG CF	HYDRO TEST: PSIG		
CASE-CONNECT	☐ VENT	☐ DRAIN	☐ GAGE	
IMPELLER DIA.	RATED:	MAX.:	MIN.:	TYPE:
IMPELLER MOUNT	☐ BETWEEN BRGS	☐ OVERHUNG		
BEARING-TYPE	RADIAL:	THRUST:		
LUBRICATION	☐ RING OIL ☐ FLOOD ☐ OIL MIST ☐ FLINGER ☐ PRESSURE ☐ GREASE			
COUPLING	MFR	MODEL	☐ GUARD	
DRIVER HALF MTD BY	☐ PUMP MFR.	☐ DRIVER MFR.	☐ PURCHASER	
PACKING	MFR. & TYPE:		SIZE/NO OF RINGS:	
MECH SEAL	MFR. & MODEL:		API CLASS. CODE:	
	MFR. CODE:			

SHOP TESTS

☐ NON-WIT. PERF. ☐ WIT. PERF.
☐ NON-WIT. HYDRO ☐ WIT. HYDRO
☐ NPSH REQ'D. ☐ WIT. NPSH
☐ SHOP INSPECTION
☐ DISMANT. & INSP. AFTER TEST
☐ OTHER

MATERIALS

PUMP: CASE/TRIM CLASS:

VERTICAL PUMPS

PIT OR SLUMP DEPTH:
MIN. SUBMERGENCE REQ'D:

COLUMN	☐	☐ THREADED
LINE SHAFT	☐ OPEN	☐ ENCLOSED
BRGS	BOWL	LINE SHAFT
BRG. LUBE	☐ PUMP FLUID	☐ OIL ☐ GREASE
☐ STRAINER		

AUXILIARIES

C.W. PIPE PLAN API 610	☐ CU ☐ SS ☐ CS ☐ TUBING ☐ PIPE BY			
TOTAL COOLING WATER	OF	PSIG	MAX A T	☐ SIGHT F 1 REQ'D
PACKING COOLING INJECTION REQ'D	TOTAL GPM			PSIG
SEAL FLUSH PLAN API 610	☐ CS ☐ SS ☐ TUBING ☐ PIPE BY			
EXTERNAL SEAL FLUSH FLUID		GPM	PSIG	
AUXILIARY SEAL PLAN API 610	☐ CS ☐ SS ☐ TUBING ☐ PIPE BY			
AUX SEAL QUENCH FLUID:				

MOTOR DRIVER

HP: 0.25	RPM:	FRAME:	VOLTS/PHASE/HZ:
MFR:	TYPE: SQUIRREL GAGE INDUCTION		NEMA DESIGN
ENCLOSURE:	RATED AMBIENT TEMP 40° C		INSUL. CLASS
ELEVATION: FT	FULL LOAD AMPS	SPACE HEATERS	

PUMP THRUST: LB UP DOWN
LENGTH BELOW MOUNTING FLANGE:

APPROXIMATE WEIGHTS	PUMP & BASE	MOTOR:	GEAR:	TURBINE:

CODE REQUIREMENTS & SPECS:

REMARKS:

944 3227 0712

UNITED ENGINEERS & CONSTRUCTORS A Raytheon Company Western Operations	EQUIPMENT DATA SHEET ☒ CDR ☐ TITLE I ☐ TITLE II ☐ TITLE III	ITEM NUMBER P-05-401A,B	PAGE 1 OF 1
CUSTOMER & LOCATION DOE-RL/WHC HANFORD, WA	PROJECT WRAP FACILITY MODULE 2A	S-R JOB/INQUIRY NO. 6237.006	DATE: 04/08/92
		ACCOUNT NO.	BY: RLH

REVISIONS (DATE & BY)	A	04/17/92 RLH	B		C		D	
	E		F		G		H	

SERVICE: MIXED POLYMER PUMP — NO. REQ'D: 2

MANUFACTURER: — SOURCE OF QUOTE:

MODEL & TYPE: — TURBINE DRIVEN: — MOTOR DRIVEN:

CONDITIONS OF SERVICE

CONDITIONS SHOWN FOR TOTAL REQUIRED SERVICE		TOTAL OPERATING PUMPS REQUIRED AND SPARE PUMPS	
PUMPING TEMP: 60 °F	SUCTION: 0 PSIG	NPSH AVAIL:	NSPH REQ'D (WATER):
CAPACITY @ P.T.: 5 GPM	DISCHARGE: 100 PSIG	RPM:	EFF.:
SPEC. GR. @ P.T.: 1.03	DIFFERENTIAL: 100 PSI	BHP @ RATING: 0.36	MAX. BHP FOR FRAME:
VISCOS. @ P.T.: 130 CP SSU	HEAD: 237.2 FT.	RECOMMENDED HP DRIVEN: 0.5	
V.P. @ P.T.: PSIA	HYDRAULIC HP:	FLUID: VINYL ESTER STYRENE	

MATERIALS	GRTNNELL HARDNESS	CONSTRUCTION
OUTER CASE:		CASE SWP: PSIG @ °F HYD. TEST (MAX.) PSIG
SIDE PLATE:		MIN. THICKNESS: IN. CORR. ALLOW:
LINER:		SUPPORT TYPE: SPLIT ☐ HORIZ. ☐12 VERT.
ROTOR OR GEARS:		ROTOR OR GEAR OVERHUNG: ☐ YES ☐ NO
ROTATING VANE:		DIAMETER SIZE: IN. TYPE:
IDLER:		TYPE GEAR: ☐ SPUR ☐ HELICAL ☐ HERRING BONE)
TIMING GEAR:		ROTATION FACING PUMP CPLG.: (CW:CCW)
GASKETS:		RELIEF VALVES ☐ INT. ☐ EXT. PRESS. SETTING: PSIG
STUDS & NUTS:		CLEARANCE (DIAM.): IN. SIDE PLATE: IN.
SHAFT:		COUPLING MTR. ☐ SINGLE ☐ SPACER GUARD
SHAFT SLEEVES:		STUFFING BOXES BORE: IN. DEPTH:
STUFFING BOX:		JACKETED: ☐ YES ☐ NO SMOTHERING GLAND: ☐ YES ☐ NO
PACKING GLAND:		PACKING NO. RINGS: SIZE: IN. SQ.: IN. I.D.:
GLAND STUDS:		MECH. SEAL MAKE & TYPE:
LANTERN RING:		MAT'L ROT. FACE: STAT. FACE: SEAL GASK:
THROAT BUSHING:		BASE PLATE TYPE:

BEARINGS

THRUST: ☐ BALL:SLEEVE ☐ OIL GREASE ☐ INT EXT TYPE

RADIAL: ☐ BALL:SLEEVE ☐ OIL GREASE ☐ INT EXT TYPE

SPEED REDUCER

MAKE:

CASE MAT'L: GEAR MAT'L:

TYPE: CLASS:

SPPED RATO: SERVICE FACTOR:

COOLING WATER

THRUST BRG.: ☐ YES ☐ NO GPM

RADIAL BRG.: ☐ YES ☐ NO GPM

STUFF. BOX: ☐ YES ☐ NO GPM

CONNECTIONS

NOZZLES	SIZE	RATING	FACING	LOCATION
SUCTION				
DISCH.				
VENTS				
DRAINS				
COOL. WTR.				

DRIVER

MOTOR	TURBINE
MAKE:	MAKE:
ENCLOSURE:	TYPE:
FRAME NO.:	HP: RPM:
HP: RPM:	PRESS. @ THROTTLE: PSIG
VOLTS: PHASE: CYCLES:	TEMP.: °F
START (LOW VOLT: X LINE):	EXHAUST PRESS.:
BRG. TYPE:	WATER RATE:
BRG. LUBE:	NO. HAND VALVES:

DRAWINGS

SERIAL NUMBER:

PERFORMANCE CURVE:

OUTLINE DRAWING:

CROSS SECT. DWG. OR BULLETIN # & PAGE #:

TESTING

WITNESS PERF. TEST:	☐ YES ☐ NO	
WITNESS HYDRO TEST:	☐ YES ☐ NO	
SUBMERGENCE TEST:	☐ YES ☐ NO	
WTS. PUMP: LBS.	BASE: LBS.	DRIVER: LBS.

REMARKS: FLASHPOINT: 73-100°F

(1) INCLUDES 8 WT. PERCENT STYRENE, 0.75 WT. PERCENT CATALYST ON RESIN WT. BASIS POS. DISP. GEAR

UNITED ENGINEERS & CONSTRUCTORS
A Raytheon Company
Western Operations

EQUIPMENT DATA SHEET

☒ CDR ☐ TITLE I ☐ TITLE II ☐ TITLE III

ITEM NUMBER: P-05-402

PAGE: 1 OF 1

CUSTOMER & LOCATION: DOE-RL/WHC HANFORD, WA

PROJECT: WRAP FACILITY MODULE 2A

UE&C JOB NO.: 6237.006

DATE: 04/08/92

ACCOUNT NO.:

BY: RLH

REVISIONS (DATE & BY)							
A		B		C		D	
E		F		G		H	

SERVICE: WASTE WATER TRANSFER PUMP

MANUFACTURER:

SOURCE OF QUOTE:

NO. PUMPS REQ'D:	SIZE & TYPE:		NO. OF STAGES: 1	
NO. MOTORS REQ'D:	ITEM NO.:	PROVIDED BY:	MTD BY:	REF. PAGE:
NO. TURBINES REQ'D:	ITEM NO.:	PROVIDED BY:	MTD BY:	REF. PAGE:

CONDITIONS OF SERVICE, EACH PUMP

LIQUID: WASTE WATER			
GPM AT PT. NOR.:	RATED: 5	DISCH. PRESS: 20 PSIG	
PT °F RATED: 60	MAX.	SUCT. PRESS. PSIG: MAX. 0 RATED	
SP GR. AT RATED PT.: 1.0	DIFF. PRES. PSI: 20		
VAP. PRESS. AT RATED P. PSIA: 0.2563	DIFF. HEAD. FT: 46.1		
VIS. AT RATED: ☐ PT. ☒ CP: 1.13	NPSHA. FT:		
CORR/EROS. CAUSED BY:	CORR ALLOW.:		
COLD START TEMP °F:	SP GR:	& VIS:	

PERFORMANCE

PROPOSAL CURVE NO.:	
RPM:	NPSHR (WATER) (H.C.)
EFF.:	BHP RATED: 0.08
MAX. BHP RATED IMP:	
MAX. HEAD RATED IMP: 30 FT	
MIN. CONTINUOUS GPM:	
ROTATION (VIEWED FROM CPLG END):	
COLD START GHP:	

CONSTRUCTION

NOZZLES	SIZE	RATING	FACINGS	LOCATION
SUCTION				
DISCHARGE				

CASE-MOUNT	☐ CENTERLINE	☐ FOOT	☐ BRACKET	☐ VERT (TYPE)	
CASE-SPLIT	☐ AXIAL	☐ RADIAL	TYPE SUCTION	☐ SGL	☐ DBL
CASE-PRESSURE	MAX. ALLOW: PSIG CF	HYDRO TEST: PSIG			
CASE-CONNECT	☐ VENT	☐ DRAIN	☐-GAGE		
IMPELLER DIA.	RATED:	MAX.:	MIN.:	TYPE:	
IMPELLER MOUNT	☐ BETWEEN BRGS	☐ OVERHUNG			
BEARING-TYPE	RADIAL:	THRUST:			
LUBRICATION	☐ RING OIL ☐ FLOOD ☐ OIL MIST ☐ FLINGER ☐ PRESSURE ☐ GREASE				
COUPLING	MFR	MODEL	☐ GUARD		
DRIVER HALF MTD BY	☐ PUMP MFR.	☐ DRIVER MFR.	☐ PURCHASER		
PACKING	MFR. & TYPE:		SIZE/NO OF RINGS:		
MECH SEAL	MFR. & MODEL:		API CLASS. CODE:		
	MFR. CODE:				

SHOP TESTS

☐ NON-WIT. PERF. ☐ WIT. PERF.
☒ NON-WIT. HYDRO ☐ WIT. HYDRO
☐ NPSH REQ'D. ☐ WIT. NPSH
☐ SHOP INSPECTION
☐ DISMANT. & INSP. AFTER TEST
☐ OTHER

MATERIALS

PUMP: CASE/TRIM CLASS:

BASEPLATE:

VERTICAL PUMPS

PIT OR SLUMP DEPTH:

MIN. SUBMERGENCE REQ'D:

COLUMN	☐	☐ THREADED
LINE SHAFT	☐ OPEN	☐ ENCLOSED
BRGS	BOWL	LINE SHAFT
BRG. LUBE	☐ PUMP FLUID	☐ OIL ☐ GREASE
☐ STRAINER		

AUXILIARIES

C.W. PIPE PLAN API 610	☐CU ☐ SS ☐ CS ☐ TUBING ☐ PIPE BY			
TOTAL COOLING WATER	OF	PSIG	MAX A T	☐ SIGHT F 1 REQ'D
PACKING COOLING INJECTION REQ'D	TOTAL GPM		PSIG	
SEAL FLUSH PLAN API 610	☐ CS ☐ SS ☐ TUBING ☐ PIPE BY			
EXTERNAL SEAL FLUSH FLUID		GPM	PSIG	
AUXILIARY SEAL PLAN API 610	☐ CS ☐ SS ☐ TUBING ☐ PIPE BY			
AUX SEAL QUENCH FLUID:				

MOTOR DRIVER

HP: 1/4	RPM:	FRAME:	VOLTS/PHASE/HZ: 120/1/60
MFR:	TYPE: SQUIRREL GAGE INDUCTION		NEMA DESIGN
ENCLOSURE:	RATED AMBIENT TEMP 40° C		INSUL. CLASS
ELEVATION: FT	FULL LOAD AMPS	SPACE HEATERS	

PUMP THRUST: LB UP DOWN

LENGTH BELOW MOUNTING FLANGE:

APPROXIMATE WEIGHTS	PUMP & BASE: 150 TOTAL	MOTOR:	GEAR:	TURBINE:

CODE REQUIREMENTS & SPECS:

REMARKS:

9413227.0714

UNITED ENGINEERS & CONSTRUCTORS
A Raytheon Company
Western Operations

EQUIPMENT DATA SHEET

☒ CDR ☐ TITLE I ☐ TITLE II ☐ TITLE III

ITEM NUMBER	PAGE
P-05-403	1 OF 1

CUSTOMER & LOCATION	PROJECT	S-R JOB/INQUIRY NO.	DATE: 04/08/92
DOE-RL/WHC HANFORD, WA	WRAP FACILITY MODULE 2A	6237.006	BY: RLH
		ACCOUNT NO.	

REVISIONS (DATE & BY)	A		B		C		D	
	E		F		G		H	

SERVICE VACUUM DEWATERING PUMP — NO. REQ'D 1

MANUFACTURER — SOURCE OF QUOTE

MODEL & TYPE: — TURBINE DRIVEN — MOTOR DRIVEN

CONDITIONS OF SERVICE

CONDITIONS SHOWN FOR TOTAL REQUIRED SERVICE				TOTAL OPERATING PUMPS REQUIRED AND SPARE PUMPS	
PUMPING TEMP	60 °F	SUCTION	0 PSIG	NPSH AVAIL	NSPH REQ'D (WATER)
CAPACITY @ P.T.	0.8 ACFM	DISCHARGE	5 PSIG	RPM	EFF.
SPEC. GR. @ P.T.	1.0	DIFFERENTIAL	5 PSI	BHP @ RATING 0.02	MAX. BHP FOR FRAME
VISCOS. @ P.T.	.018 CP	HEAD	FT.	RECOMMENDED HP DRIVEN	
V.P. @ P.T.	0.256 PSIA	HYDRAULIC HP		FLUID AIR (SATURATED W/WATER VAPOR)	

MATERIALS	GRINNELL HARDNESS	CONSTRUCTION
OUTER CASE STAINLESS STEEL		CASE SWP PSIG @ °F HYD. TEST (MAX.) PSIG
SIDE PLATE		MIN. THICKNESS IN. CORR. ALLOW
LINER		SUPPORT TYPE SPLIT (HORIZ.) (VERT.)
ROTOR OR GEARS		ROTOR OR GEAR OVERHUNG (YES) (NO)
ROTATING VANE		DIAMETER SIZE IN. TYPE
IDLER		TYPE GEAR (SPUR) (HELICAL) (HERRING BONE)
TIMING GEAR		ROTATION FACING PUMP CPLG. (CW:CCW)
GASKETS		RELIEF VALVES (INT.) (EXT.) PRESS. SETTING PSIG
STUDS & NUTS		CLEARANCE (DIAM.) IN. SIDE PLATE IN.
SHAFT		COUPLING MTR. (SINGLE) (SPACER) GUARD
SHAFT SLEEVES		STUFFING BOXES BORE IN. DEPTH
STUFFING BOX		JACKETED (YES) (NO) SMOTHERING GLAND (YES) (NO)
PACKING GLAND		PACKING NO. RINGS SIZE IN. SQ. IN. I.D.
GLAND STUDS		MECH. SEAL MAKE & TYPE
LANTERN RING		MAT'L ROT. FACE STAT. FACE SEAL GASK
THROAT BUSHING		BASE PLATE TYPE

BEARINGS

THRUST (BALL:SLEEVE) (OIL GREASE) (INT EXT) TYPE

RADIAL (BALL:SLEEVE) (OIL GREASE) (INT EXT) TYPE

SPEED REDUCER

MAKE

CASE MAT'L GEAR MAT'L

TYPE CLASS

SPPED RATO SERVICE FACTOR

COOLING WATER

THRUST BRG.	(YES) (NO)	GPM
RADIAL BRG.	(YES) (NO)	GPM
STUFF. BOX	(YES) (NO)	GPM

CONNECTIONS

NOZZLES	SIZE	RATING	FACING	LOCATION
SUCTION				
DISCH.				
VENTS				
DRAINS				
COOL. WTR.				

DRIVER

MOTOR	TURBINE
MAKE	MAKE
ENCLOSURE	TYPE
FRAME NO.	HP RPM
HP RPM	PRESS. @ THROTTLE PSIG
VOLTS PHASE CYCLES	TEMP. °F
START (LOW VOLT: X LINE)	EXHAUST PRESS.
BRG. TYPE	WATER RATE
BRG. LUBE	NO. HAND VALVES

DRAWINGS

SERIAL NUMBER

PERFORMANCE CURVE

OUTLINE DRAWING

CROSS SECT. DWG. OR BULLETIN # & PAGE #

TESTING

WITNESS PERF. TEST ☐ YES ☒ NO	
WITNESS HYDRO TEST ☐ YES ☒ NO	
SUBMERGENCE TEST ☐ YES ☒ NO	
WTS. TOTAL 100 LBS. BASE LBS. DRIVER LBS.	

REMARKS: VACUUM

UNITED ENGINEERS & CONSTRUCTORS A Raytheon Company Western Operations	EQUIPMENT DATA SHEET ☒ CDR ☐ TITLE I ☐ TITLE II ☐ TITLE III	ITEM NUMBER P-05-404	PAGE 1 OF 1
CUSTOMER & LOCATION DOE-RL/WHC HANFORD, WA	PROJECT WRAP FACILITY MODULE 2A	S-R JOB/INQUIRY NO. 6237.006	DATE: 04/08/92
		ACCOUNT NO.	BY: RLH

REVISIONS (DATE & BY)	A		B		C		D	
	E		F		G		H	

SERVICE: HYDROCARBON WASTE TRANSFER PUMP — NO. REQ'D: 1

MANUFACTURER — SOURCE OF QUOTE

MODEL & TYPE: — TURBINE DRIVEN — MOTOR DRIVEN

CONDITIONS OF SERVICE

CONDITIONS SHOWN FOR TOTAL REQUIRED SERVICE				TOTAL OPERATING PUMPS REQUIRED AND SPARE PUMPS	
PUMPING TEMP:	60 °F	SUCTION:	0 PSIG	NPSH AVAIL:	NSPH REQ'D (WATER):
CAPACITY @ P.T.:	40 GPM	DISCHARGE:	50 PSIG	RPM:	EFF.:
SPEC. GR. @ P.T.:	1.03	DIFFERENTIAL:	50 PSI	BHP @ RATING: 1.46	MAX. BHP FOR FRAME:
VISCOS. @ P.T.:	130 CP	HEAD:	118.6 FT.	RECOMMENDED HP DRIVEN: 2	
V.P. @ P.T.:	PSIA	HYDRAULIC HP:		FLUID: VINYL ESTER STYRENE W/SOLVENT	

MATERIALS	BRINNELL HARDNESS	CONSTRUCTION
OUTER CASE:		CASE SWP: PSIG @ °F HYD. TEST (MAX.) PSIG
SIDE PLATE:		MIN. THICKNESS: IN. CORR. ALLOW:
LINER:		SUPPORT TYPE SPLIT ☐ HORIZONTAL ☐ VERTICAL
ROTOR OR GEARS:		ROTOR OR GEAR OVERHUNG ☐ YES ☐ NO
ROTATING VANE:		DIAMETER SIZE: IN. TYPE:
IDLER:		TYPE GEAR: ☐ SPUR ☐ HELICAL ☐ HERRING BONE
TIMING GEAR:		ROTATION FACING PUMP CPLG. (CW:CCW)
GASKETS:		RELIEF VALVES ☐ INT. ☐ EXT. PRESS. SETTING PSIG
STUDS & NUTS:		CLEARANCE (DIAM.): IN. SIDE PLATE: IN.
SHAFT:		COUPLING MTR.: ☐ SINGLE ☐ SPACER GUARD
SHAFT SLEEVES:		STUFFING BOXES BORE: IN. DEPTH:
STUFFING BOX:		JACKETED: ☐ YES ☐ NO SMOTHERING GLAND: ☐ YES ☐ NO
PACKING GLAND:		PACKING NO. RINGS: SIZE: IN. SQ. IN. I.D.
GLAND STUDS:		MECH. SEAL MAKE & TYPE:
LANTERN RING:		MAT'L ROT. FACE STAT. FACE SEAL GASK
THROAT BUSHING:		BASE PLATE TYPE:

BEARINGS

THRUST: ☐ BALL:SLEEVE ☐OIL GREASE ☐ INT EXT TYPE

RADIAL: ☐ BALL:SLEEVE ☐OIL GREASE ☐ INT EXT TYPE

CONNECTIONS

NOZZLES	SIZE	RATING	FACING	LOCATION
SUCTION				
DISCH.				
VENTS				
DRAINS				
COOL. WTR.				

SPEED REDUCER

MAKE:

CASE MAT'L: GEAR MAT'L:

TYPE: CLASS:

SPEED RATIO: SERVICE FACTOR:

COOLING WATER

THRUST BRG.: ☐ YES ☐ NO GPM

RADIAL BRG.: ☐ YES ☐ NO GPM

STUFF. BOX : ☐ YES ☐ NO GPM

DRIVER

MOTOR	TURBINE
MAKE:	MAKE
ENCLOSURE:	TYPE
FRAME NO.:	HP: RPM:
HP: 2 RPM	PRESS. @ THROTTLE: PSIG
VOLTS: 460 PHASE: 3 CYCLES: 60	TEMP.: °F
START (LOW VOLT: X LINE):	EXHAUST PRESS.:
BRG. TYPE:	WATER RATE:
BRG. LUBE:	NO. HAND VALVES:

DRAWINGS

SERIAL NUMBER:

PERFORMANCE CURVE:

OUTLINE DRAWING:

CROSS SECT. DWG. OR BULLETIN # & PAGE #:

TESTING

WITNESS PERF. TEST ☐ YES ☐ NO

WITNESS HYDRO TEST ☐ YES ☒ NO

SUBMERGENCE TEST ☐ YES ☐ NO

WTS. TOTAL: 200 LBS. BASE: LBS. DRIVER: LBS.

REMARKS: POS. DISP. GEAR
FLASHPOINT: 73-100°F

9413227.0716

UNITED ENGINEERS & CONSTRUCTORS
A Raytheon Company
Western Operations

EQUIPMENT DATA SHEET

☒ CDR ☐ TITLE I ☐ TITLE II ☐ TITLE III

ITEM NUMBER	PAGE
P-05-405	1 OF 1

CUSTOMER & LOCATION	PROJECT	UE&C JOB NO.	DATE: 06/12/92
DOE-RL/WHC HANFORD, WA	WRAP FACILITY MODULE 2A	6237.006	
		ACCOUNT NO.	BY: RLH

REVISIONS (DATE & BY)	A		B		C		D	
	E		F		G		H	

SERVICE	MANUFACTURER	SOURCE OF QUOTE
DAY TANK SUMP PUMP		

NO. PUMPS REQ'D:	SIZE & TYPE:		NO. OF STAGES:	
NO. MOTORS REQ'D:	ITEM NO.:	PROVIDED BY:	MTD BY:	REF. PAGE:
NO. TURBINES REQ'D:	ITEM NO.:	PROVIDED BY:	MTD BY:	REF. PAGE:

CONDITIONS OF SERVICE, EACH PUMP

LIQUID: HYDROCARBON WASTE LIQUID			
GPM AT PT. NOR.:	RATED: 20	DISCH. PRESS: 20 PSIG	
PT °F RATED: 60	MAX. 110	SUCT. PRESS. PSIG: MAX. 0 RATED	
SP GR. AT RATED PT.: 1.325	DIFF. PRES. PSI: 20		
VAP. PRESS. AT RATED P.: 380 MM HG	DIFF. HEAD. FT:		
VIS. AT RATED: ☐ PT. ☐ CP:	NPSHA. FT:		
CORR/EROS. CAUSED BY:	CORR ALLOW.:		
COLD START TEMP °F:	SP GR:	& VIS:	

PERFORMANCE

PROPOSAL CURVE NO.:	
RPM:	NPSHR (WATER) (H.C.)
EFF.:	BHP RATED: 0.31
MAX. BHP RATED IMP:	
MAX. HEAD RATED IMP: 30 FT	
MIN. CONTINUOUS GPM:	
ROTATION (VIEWED FROM CPLG END):	
COLD START GHP:	

CONSTRUCTION

NOZZLES	SIZE	RATING	FACINGS	LOCATION
SUCTION				
DISCHARGE				

CASE-MOUNT	☐ CENTERLINE	☐ FOOT	☐ BRACKET	☐ VERT (TYPE)
CASE-SPLIT	☐ AXIAL	☐ RADIAL	TYPE SUCTION	☐ SGL ☐ DBL
CASE-PRESSURE	MAX. ALLOW: PSIG CF	HYDRO TEST: PSIG		
CASE-CONNECT	☐ VENT	☐ DRAIN	☐-GAGE	
IMPELLER DIA.	RATED:	MAX.:	MIN.:	TYPE:
IMPELLER MOUNT	☐ BETWEEN BRGS	☐ OVERHUNG		
BEARING-TYPE	RADIAL:	THRUST:		
LUBRICATION	☐ RING OIL ☐ FLOOD ☐ OIL MIST ☐ FLINGER ☐ PRESSURE ☐ GREASE			
COUPLING	MFR	MODEL	☐ GUARD	
DRIVER HALF MTD BY	☐ PUMP MFR.	☐ DRIVER MFR.	☐ PURCHASER	
PACKING	MFR. & TYPE:		SIZE/NO OF RINGS:	
MECH SEAL	MFR. & MODEL:		API CLASS. CODE:	
	MFR. CODE:			

SHOP TESTS

☐ NON-WIT. PERF. ☐ WIT. PERF.
☐ NON-WIT. HYDRO ☐ WIT. HYDRO
☐ NPSH REQ'D. ☐ WIT. NPSH
☐ SHOP INSPECTION
☐ DISMANT. & INSP. AFTER TEST
☐ OTHER

MATERIALS

PUMP: CASE/TRIM CLASS:

BASEPLATE:

VERTICAL PUMPS

PIT OR SLUMP DEPTH:

MIN. SUBMERGENCE REQ'D:

COLUMN	☐	☐ THREADED
LINE SHAFT	☐ OPEN	☐ ENCLOSED
BRGS	BOWL	LINE SHAFT
BRG. LUBE	☐ PUMP FLUID	☐ OIL ☐ GREASE
☐ STRAINER		

AUXILIARIES

C.W. PIPE PLAN API 610	☐CU ☐ SS ☐ CS ☐ TUBING ☐ PIPE BY			
TOTAL COOLING WATER	OF	PSIG	MAX A T	☐ SIGHT F 1 REQ'D
PACKING COOLING INJECTION REQ'D	TOTAL GPM		PSIG	
SEAL FLUSH PLAN API 610	☐ CS ☐ SS ☐ TUBING ☐ PIPE BY			
EXTERNAL SEAL FLUSH FLUID		GPM	PSIG	
AUXILIARY SEAL PLAN API 610	☐ CS ☐ SS ☐ TUBING ☐ PIPE BY			
AUX SEAL QUENCH FLUID:				

MOTOR DRIVER

HP: 0.25	RPM:	FRAME:	VOLTS/PHASE/HZ:	
MFR:	TYPE: SQUIRREL GAGE INDUCTION		NEMA DESIGN	PUMP THRUST: LB UP DOWN
ENCLOSURE:	RATED AMBIENT TEMP 40° C		INSUL. CLASS	LENGTH BELOW MOUNTING FLANGE:
ELEVATION: FT	FULL LOAD AMPS	SPACE HEATERS		

APPROXIMATE WEIGHTS	PUMP & BASE	MOTOR:	GEAR:	TURBINE:

CODE REQUIREMENTS & SPECS:

REMARKS:

UNITED ENGINEERS & CONSTRUCTORS A Raytheon Company Western Operations	EQUIPMENT DATA SHEET ☒ CDR ☐ TITLE I ☐ TITLE II ☐ TITLE III	ITEM NUMBER P-04-201	PAGE 1 OF 1
CUSTOMER & LOCATION DOE-RL/WHC HANFORD, WA	PROJECT WRAP FACILITY MODULE 2A	UE&C JOB NO. 6237.006 / ACCOUNT NO.	DATE: 04/16/92 / BY: VAW

REVISIONS (DATE & BY)	A		B		C		D	
	E		F		G		H	

SERVICE	MANUFACTURER	SOURCE OF QUOTE
DECON WATER BOOSTER PUMP		

NO. PUMPS REQ'D: 1	SIZE & TYPE:		NO. OF STAGES: 1	
NO. MOTORS REQ'D: 1	ITEM NO.:	PROVIDED BY:	MTD BY:	REF. PAGE:
NO. TURBINES REQ'D:	ITEM NO.:	PROVIDED BY:	MTD BY:	REF. PAGE:

CONDITIONS OF SERVICE EACH PUMP

LIQUID: PROCESS WATER				
GPM AT PT. NOR.: 23	RATED: 26	DISCH. PRESS: 152 PSIG		
PT °F RATED: 60	MAX.	SUCT. PRESS. PSIG: 58	MAX. 38 RATED	
SP GR. AT RATED PT.: 1.0	DIFF. PRES. PSI: 114			
VAP. PRESS. AT RATED P. PSIA: 0.2563	DIFF. HEAD. FT: 264			
VIS. AT RATED PT. ☐ SSU ☒ CP: 1.13	NPSHA. FT: 109			
CORR/EROS. CAUSED BY:	CORR ALLOW.:			
COLD START TEMP °F:	SP GR:	& VIS:		

PERFORMANCE

PROPOSAL CURVE NO.:	
RPM:	NPSHR (WATER) (H.C.)
EFF.:	BHP RATED: 2.8
MAX. BHP RATED IMP:	
MAX. HEAD RATED IMP: 30 FT	
MIN. CONTINUOUS GPM:	
ROTATION (VIEWED FROM CPLG END):	
COLD START GHP:	

CONSTRUCTION

NOZZLES	SIZE	RATING	FACINGS	LOCATION
SUCTION				
DISCHARGE				

CASE-MOUNT	☐ CENTERLINE	☐ FOOT	☐ BRACKET	☐ VERT (TYPE)	
CASE-SPLIT	☐ AXIAL	☐ RADIAL	TYPE SUCTION	☐ SGL	☐ DBL
CASE-PRESSURE	MAX. ALLOW: PSIG CF	HYDRO TEST: PSIG			
CASE-CONNECT	☐ VENT	☐ DRAIN	☐ GAGE		
IMPELLER DIA.	RATED:	MAX.:	MIN.:	TYPE:	
MPELLER MOUNT	☐ BETWEEN BRGS	☐ OVERHUNG			
BEARING-TYPE	RADIAL:	THRUST:			
LUBRICATION	☐ RING OIL ☐ FLOOD ☐ OIL MIST ☐ FLINGER ☐ PRESSURE ☐ GREASE				
COUPLING	MFR	MODEL	☐ GUARD		
DRIVER HALF MTD BY	☐ PUMP MFR.	☐ DRIVER MFR.	☐ PURCHASER		
PACKING	MFR. & TYPE:	SIZE/NO OF RINGS:			
MECH SEAL	MFR. & MODEL:	API CLASS. CODE:			
	MFR. CODE:				

SHOP TESTS

☐ NON-WIT. PERF. ☐ WIT. PERF.
☒ NON-WIT. HYDRO ☐ WIT. HYDRO
☐ NPSH REQ'D. ☐ WIT. NPSH
☐ SHOP INSPECTION
☐ DISMANT. & INSP. AFTER TEST
☐ OTHER

MATERIALS

PUMP: CASE/TRIM CLASS: SS-316

BASEPLATE:

VERTICAL PUMPS

PIT OR SLUMP DEPTH:
MIN. SUBMERGENCE REQ'D:

COLUMN	☐	☐ THREADED
LINE SHAFT	☐ OPEN	☐ ENCLOSED
BRGS	BOWL	LINE SHAFT

BRG. LUBE ☐ PUMP FLUID ☐ OIL ☐ GREASE
☐ STRAINER

AUXILIARIES

C.W. PIPE PLAN API 610	☐ CU ☐ SS ☐ CS ☐ TUBING ☐ PIPE BY			
TOTAL COOLING WATER	OF	PSIG	MAX A T	☐ SIGHT F 1 REQ'D
PACKING COOLING INJECTION REQ'D	TOTAL GPM		PSIG	
SEAL FLUSH PLAN API 610	☐ CS ☐ SS ☐ TUBING ☐ PIPE BY			
EXTERNAL SEAL FLUSH FLUID	GPM	PSIG		
AUXILIARY SEAL PLAN API 610	☐ CS ☐ SS ☐ TUBING ☐ PIPE BY			
AUX SEAL QUENCH FLUID:				

MOTOR DRIVER

HP: 1.5	RPM: 3,550	FRAME:	VOLTS/PHASE/HZ: 460/3/60	
MFR:	TYPE: SQUIRREL GAGE INDUCTION		NEMA DESIGN	
ENCLOSURE:	RATED AMBIENT TEMP 40° C		INSUL. CLASS	
ELEVATION: FT	FULL LOAD AMPS	SPACE HEATERS		

PUMP THRUST: LB UP DOWN
LENGTH BELOW MOUNTING FLANGE:

APPROXIMATE WEIGHTS	PUMP & BASE: 200 LBS TOTAL	MOTOR:	GEAR:	TURBINE:

CODE REQUIREMENTS & SPECS:

REMARKS:

9413227.0718

UNITED ENGINEERS & CONSTRUCTORS A Raytheon Company Western Operations	EQUIPMENT DATA SHEET ☒ CDR ☐ TITLE I ☐ TITLE II ☐ TITLE III	ITEM NUMBER P-04-210	PAGE 1 OF 1
CUSTOMER & LOCATION DOE-RL/WHC HANFORD, WA	PROJECT WRAP FACILITY MODULE 2A	UE&C JOB NO. 6237.006 / ACCOUNT NO.	DATE: 04/16/92 / BY: VAW

REVISIONS (DATE & BY)	A		B		C		D	
	E		F		G		H	

SERVICE SIZE REDUCE & REPACKAGE AREA SUMP PUMP	MANUFACTURER	SOURCE OF QUOTE

NO. PUMPS REQ'D: 1	SIZE & TYPE:		NO. OF STAGES: 1		
NO. MOTORS REQ'D:	ITEM NO.:	PROVIDED BY:	MTD BY:	REF. PAGE:	
NO. TURBINES REQ'D:	ITEM NO.:	PROVIDED BY:	MTD BY:	REF. PAGE:	

CONDITIONS OF SERVICE, EACH PUMP

LIQUID: ACTIVE WASTE WATER				
GPM AT PT. NOR.: 23	RATED: 25.52	DISCH. PRESS: 11 PSIG		
PT °F RATED: 60 MAX.	SUCT. PRESS. PSIG: 14 MAX.	13 RATED		
SP GR. AT RATED PT.: 1.0	DIFF. PRES. PSI: 12			
VAP. PRESS. AT RATED P. PSIA: 0.2563	DIFF. HEAD. FT: 29			
VIS. AT RATED PT. ☐ SSU ☒ CP: 1.13	NPSHA. FT: 26			
CORR/EROS. CAUSED BY:	CORR ALLOW.:			
COLD START TEMP °F:	SP GR:	& VIS:		

PERFORMANCE

PROPOSAL CURVE NO.:	
RPM:	NPSHR (WATER) (H.C.)
EFF.:	BHP RATED:
MAX. BHP RATED IMP:	
MAX. HEAD RATED IMP: 30 FT	
MIN. CONTINUOUS GPM:	
ROTATION (VIEWED FROM CPLG END):	
COLD START GHP:	

CONSTRUCTION

NOZZLES	SIZE	RATING	FACINGS	LOCATION
SUCTION				
DISCHARGE				

CASE-MOUNT	☐ CENTERLINE	☐ FOOT	☐ BRACKET	☐ VERT (TYPE)
CASE-SPLIT	☐ AXIAL	☐ RADIAL	TYPE SUCTION	☐ SGL ☐ DBL
CASE-PRESSURE	MAX. ALLOW: PSIG CF	HYDRO TEST: PSIG		
CASE-CONNECT	☐ VENT	☐ DRAIN	☐ GAGE	
IMPELLER DIA.	RATED:	MAX.:	MIN.:	TYPE:
IMPELLER MOUNT	☐ BETWEEN BRGS	☐ OVERHUNG		
BEARING-TYPE	RADIAL:	THRUST:		
LUBRICATION	☐ RING OIL ☐ FLOOD ☐ OIL MIST ☐ FLINGER ☐ PRESSURE ☐ GREASE			
COUPLING	MFR	MODEL	☐ GUARD	
DRIVER HALF MTD BY	☐ PUMP MFR.	☐ DRIVER MFR.	☐ PURCHASER	
PACKING	MFR. & TYPE:		SIZE/NO OF RINGS:	
MECH SEAL	MFR. & MODEL:		API CLASS. CODE:	
	MFR. CODE:			

SHOP TESTS

☐ NON-WIT. PERF. ☐ WIT. PERF.
☒ NON-WIT. HYDRO ☐ WIT. HYDRO
☐ NPSH REQ'D. ☐ WIT. NPSH
☐ SHOP INSPECTION
☐ DISMANT. & INSP. AFTER TEST
☐ OTHER

MATERIALS

PUMP: CASE/TRIM CLASS: SS - 316

AUXILIARIES

C.W. PIPE PLAN API 610	☐ CU ☐ SS ☐ CS ☐ TUBING ☐ PIPE BY				
TOTAL COOLING WATER	OF	PSIG	MAX A T	☐ SIGHT F 1 REQ'D	
PACKING COOLING INJECTION REQ'D		TOTAL GPM		PSIG	
SEAL FLUSH PLAN API 610	☐ CS ☐ SS ☐ TUBING ☐ PIPE BY				
EXTERNAL SEAL FLUSH FLUID			GPM	PSIG	
AUXILIARY SEAL PLAN API 610	☐ CS ☐ SS ☐ TUBING ☐ PIPE BY				
AUX SEAL QUENCH FLUID:					

VERTICAL PUMPS

PIT OR SLUMP DEPTH:		
MIN. SUBMERGENCE REQ'D:		
COLUMN	☐	☐ THREADED
LINE SHAFT	☐ OPEN	☐ ENCLOSED
BRGS	BOWL	LINE SHAFT
BRG. LUBE	☐ PUMP FLUID	☐ OIL ☐ GREASE
☐ STRAINER		

MOTOR DRIVER

HP: 1.5	RPM: 1,750	FRAME:	VOLTS/PHASE/HZ: 460/3/60	
MFR:	TYPE: SQUIRREL GAGE INDUCTION		NEMA DESIGN	
ENCLOSURE:	RATED AMBIENT TEMP 40°C		INSUL. CLASS	
ELEVATION: FT	FULL LOAD AMPS		SPACE HEATERS	

PUMP THRUST: LB UP DOWN
LENGTH BELOW MOUNTING FLANGE:

APPROXIMATE WEIGHTS	PUMP & BASE: 500 LBS TOTAL	MOTOR:	GEAR:	TURBINE:

CODE REQUIREMENTS & SPECS:

REMARKS:

UNITED ENGINEERS & CONSTRUCTORS A Raytheon Company Western Operations	EQUIPMENT DATA SHEET ☒ CDR ☐ TITLE I ☐ TITLE II ☐ TITLE III	ITEM NUMBER P-04-230	PAGE 1 OF 1
CUSTOMER & LOCATION DOE-RL/WHC HANFORD, WA	PROJECT WRAP FACILITY MODULE 2A	UE&C JOB NO. 6237.006 / ACCOUNT NO.	DATE: 04/16/92 / BY: VAW

REVISIONS (DATE & BY)	A		B		C		D	
	E		F		G		H	

SERVICE	MANUFACTURER	SOURCE OF QUOTE
SPECIAL WASTE PROCESS SUMP PUMP		

NO. PUMPS REQ'D: 1	SIZE & TYPE:		NO. OF STAGES: 1	
NO. MOTORS REQ'D: 1	ITEM NO.:	PROVIDED BY:	MTD BY:	REF. PAGE:
NO. TURBINES REQ'D:	ITEM NO.:	PROVIDED BY:	MTD BY:	REF. PAGE:

CONDITIONS OF SERVICE, EACH PUMP

LIQUID: ACTIVE WASTE WATER				
GPM AT PT. NOR.: 37	RATED: 41	DISCH. PRESS: 11 PSIG		
PT °F RATED: 60	MAX.	SUCT. PRESS. PSIG: 14	MAX. 13 RATED	
SP GR. AT RATED PT.: 1.0	DIFF. PRES. PSI: 12			
VAP. PRESS. AT RATED P. PSIA: 0.2563	DIFF. HEAD. FT: 29			
VIS. AT RATED PT. ☐ SSU ☒ CP: 1.13	NPSHA. FT: 26			
CORR/EROS. CAUSED BY:	CORR ALLOW.:			
COLD START TEMP °F:	SP GR:	& VIS:		

PERFORMANCE

PROPOSAL CURVE NO.:	
RPM:	NPSHR (WATER) (H.C.)
EFF.:	BHP RATED: 0.5
MAX. BHP RATED IMP:	
MAX. HEAD RATED IMP: 30 FT	
MIN. CONTINUOUS GPM:	
ROTATION (VIEWED FROM CPLG END):	
COLD START GHP:	

CONSTRUCTION

NOZZLES	SIZE	RATING	FACINGS	LOCATION
SUCTION				
DISCHARGE				

CASE-MOUNT	☐ CENTERLINE	☐ FOOT	☐ BRACKET	☐ VERT (TYPE)
CASE-SPLIT	☐ AXIAL	☐ RADIAL	TYPE SUCTION	☐ SGL ☐ DBL
CASE-PRESSURE	MAX. ALLOW: PSIG CF	HYDRO TEST: PSIG		
CASE-CONNECT	☐ VENT	☐ DRAIN	☐ GAGE	
IMPELLER DIA.	RATED:	MAX.:	MIN.:	TYPE:
MPELLER MOUNT	☐ BETWEEN BRGS	☐ OVERHUNG		
BEARING-TYPE	RADIAL:	THRUST:		
LUBRICATION	☐ RING OIL ☐ FLOOD ☐ OIL MIST ☐ FLINGER ☐ PRESSURE ☐ GREASE			
COUPLING	MFR	MODEL	☐ GUARD	
DRIVER HALF MTD BY	☐ PUMP MFR.	☐ DRIVER MFR.	☐ PURCHASER	
PACKING	MFR. & TYPE:		SIZE/NO OF RINGS:	
MECH SEAL	MFR. & MODEL:		API CLASS. CODE:	
	MFR. CODE:			

SHOP TESTS

☐ NON-WIT. PERF. ☐ WIT. PERF.
☒ NON-WIT. HYDRO ☐ WIT. HYDRO
☐ NPSH REQ'D. ☐ WIT. NPSH
☐ SHOP INSPECTION
☐ DISMANT. & INSP. AFTER TEST
☐ OTHER

MATERIALS

PUMP: CASE/TRIM CLASS: SS-316

BASEPLATE:

AUXILIARIES

C.W. PIPE PLAN API 610	☐ CU ☐ SS ☐ CS ☐ TUBING ☐ PIPE BY			
TOTAL COOLING WATER	OF	PSIG	MAX A T	☐ SIGHT F 1 REQ'D
PACKING COOLING INJECTION REQ'D	TOTAL GPM		PSIG	
SEAL FLUSH PLAN API 610	☐ CS ☐ SS ☐ TUBING ☐ PIPE BY			
EXTERNAL SEAL FLUSH FLUID	GPM	PSIG		
AUXILIARY SEAL PLAN API 610	☐ CS ☐ SS ☐ TUBING ☐ PIPE BY			
AUX SEAL QUENCH FLUID:				

VERTICAL PUMPS

PIT OR SLUMP DEPTH:		
MIN. SUBMERGENCE REQ'D:		
COLUMN	☐	☐ THREADED
LINE SHAFT	☐ OPEN	☐ ENCLOSED
BRGS	BOWL	LINE SHAFT
BRG. LUBE	☐ PUMP FLUID	☐ OIL ☐ GREASE
☐ STRAINER		

MOTOR DRIVER

HP: 1.5	RPM: 1,750	FRAME:	VOLTS/PHASE/HZ: 460/3/60
MFR:	TYPE: SQUIRREL GAGE INDUCTION		NEMA DESIGN
ENCLOSURE:	RATED AMBIENT TEMP 40° C		INSUL. CLASS
ELEVATION: FT	FULL LOAD AMPS	SPACE HEATERS	

PUMP THRUST: LB UP DOWN

LENGTH BELOW MOUNTING FLANGE:

APPROXIMATE WEIGHTS	PUMP & BASE: 500 LBS TOTAL	MOTOR:	GEAR:	TURBINE:

CODE REQUIREMENTS & SPECS:

REMARKS:

9413227.0720

UNITED ENGINEERS & CONSTRUCTORS A Raytheon Company Western Operations	EQUIPMENT DATA SHEET ☒ CDR ☐ TITLE I ☐ TITLE II ☐ TITLE III	ITEM NUMBER P-04-240	PAGE 1 OF 1
CUSTOMER & LOCATION DOE-RL/WHC HANFORD, WA	PROJECT WRAP FACILITY MODULE 2A	UE&C JOB NO. 6237.006 / ACCOUNT NO.	DATE: 04/16/92 / BY: VAW

REVISIONS (DATE & BY)	A		B		C		D	
	E		F		G		H	

SERVICE POLYMER ENCAPSULATION ENCLOSURE SUMP PUMP	MANUFACTURER	SOURCE OF QUOTE

NO. PUMPS REQ'D: 1	SIZE & TYPE:		NO. OF STAGES: 1	
NO. MOTORS REQ'D: 1	ITEM NO.:	PROVIDED BY:	MTD BY:	REF. PAGE:
NO. TURBINES REQ'D:	ITEM NO.:	PROVIDED BY:	MTD BY:	REF. PAGE:

CONDITIONS OF SERVICE, EACH PUMP

LIQUID: ACTIVE WASTE WATER				
GPM AT PT. NOR.: 12	RATED: 13	DISCH. PRESS: 11 PSIG		
PT °F RATED: 60 MAX.	SUCT. PRESS. PSIG: 14 MAX.	13 RATED		
SP GR. AT RATED PT.: 1.0	DIFF. PRES. PSI: 12			
VAP. PRESS. AT RATED P. PSIA: 0.2563	DIFF. HEAD. FT: 29			
VIS. AT RATED PT. ☐ SSU ☒ CP: 1.13	NPSHA. FT: 26			
CORR/EROS. CAUSED BY:	CORR ALLOW.:			
COLD START TEMP °F:	SP GR:	& VIS:		

PERFORMANCE

PROPOSAL CURVE NO.:	
RPM:	NPSHR (WATER) (H.C.)
EFF.:	BHP RATED: 0.2
MAX. BHP RATED IMP:	
MAX. HEAD RATED IMP: 30 FT	
MIN. CONTINUOUS GPM:	
ROTATION (VIEWED FROM CPLG END):	
COLD START GHP:	

CONSTRUCTION

NOZZLES	SIZE	RATING	FACINGS	LOCATION
SUCTION				
DISCHARGE				

CASE-MOUNT	☐ CENTERLINE	☐ FOOT	☐ BRACKET	☐ VERT (TYPE)
CASE-SPLIT	☐ AXIAL	☐ RADIAL	TYPE SUCTION	☐ SGL ☐ DBL
CASE-PRESSURE	MAX. ALLOW: PSIG CF	HYDRO TEST: PSIG		
CASE-CONNECT	☐ VENT	☐ DRAIN	☐ GAGE	
IMPELLER DIA.	RATED:	MAX.:	MIN.:	TYPE:
IMPELLER MOUNT	☐ BETWEEN BRGS	☐ OVERHUNG		
BEARING-TYPE	RADIAL:	THRUST:		
LUBRICATION	☐ RING OIL ☐ FLOOD ☐ OIL MIST ☐ FLINGER ☐ PRESSURE ☐ GREASE			
COUPLING	MFR	MODEL	☐ GUARD	
DRIVER HALF MTD BY	☐ PUMP MFR.	☐ DRIVER MFR.	☐ PURCHASER	
PACKING	MFR. & TYPE:		SIZE/NO OF RINGS:	
MECH SEAL	MFR. & MODEL:		API CLASS. CODE:	
	MFR. CODE:			

SHOP TESTS

☐ NON-WIT. PERF. ☐ WIT. PERF.
☒ NON-WIT. HYDRO ☐ WIT. HYDRO
☐ NPSH REQ'D. ☐ WIT. NPSH
☐ SHOP INSPECTION
☐ DISMANT. & INSP. AFTER TEST
☐ OTHER

MATERIALS

PUMP: CASE/TRIM CLASS: SS

VERTICAL PUMPS

PIT OR SLUMP DEPTH:
MIN. SUBMERGENCE REQ'D:

COLUMN	☐	☐ THREADED
LINE SHAFT	☐ OPEN	☐ ENCLOSED
BRGS	BOWL	LINE SHAFT
BRG. LUBE	☐ PUMP FLUID	☐ OIL ☐ GREASE
☐ STRAINER		

AUXILIARIES

C.W. PIPE PLAN API 610	☐ CU ☐ SS ☐ CS ☐ TUBING ☐ PIPE BY			
TOTAL COOLING WATER	OF	PSIG	MAX A T	☐ SIGHT F 1 REQ'D
PACKING COOLING INJECTION REQ'D	TOTAL GPM		PSIG	
SEAL FLUSH PLAN API 610	☐ CS ☐ SS ☐ TUBING ☐ PIPE BY			
EXTERNAL SEAL FLUSH FLUID		GPM	PSIG	
AUXILIARY SEAL PLAN API 610	☐ CS ☐ SS ☐ TUBING ☐ PIPE BY			
AUX SEAL QUENCH FLUID:				

MOTOR DRIVER

HP: 1.5	RPM: 1,750	FRAME:	VOLTS/PHASE/HZ: 460/3/60	
MFR:	TYPE: SQUIRREL GAGE INDUCTION		NEMA DESIGN	
ENCLOSURE:	RATED AMBIENT TEMP 40° C		INSUL. CLASS	
ELEVATION: FT	FULL LOAD AMPS		SPACE HEATERS	

PUMP THRUST: LB UP DOWN
LENGTH BELOW MOUNTING FLANGE:

APPROXIMATE WEIGHTS	PUMP & BASE: 500 LBS	MOTOR:	GEAR:	TURBINE:

CODE REQUIREMENTS & SPECS:

REMARKS:

UNITED ENGINEERS & CONSTRUCTORS
A Raytheon Company
Western Operations

EQUIPMENT DATA SHEET

☒ CDR ☐ TITLE I ☐ TITLE II ☐ TITLE III

ITEM NUMBER: P-04-250

PAGE: 1 OF 1

CUSTOMER & LOCATION: DOE-RL/WHC HANFORD, WA

PROJECT: WRAP FACILITY MODULE 2A

UE&C JOB NO.: 6237.006

DATE: 04/16/92

ACCOUNT NO.:

BY: VAW

REVISIONS (DATE & BY)							
A		B		C		D	
E		F		G		H	

SERVICE: HIGH PRESSURE RECIRCULATION PUMP

MANUFACTURER:

NO. REQ'D: 1

SOURCE OF QUOTE:

SIZE AND TYPE:

NO. OF CYLINDERS:

DRIVER TYPE: ITEM NO.: PROVIDED BY:

MTD. BY: REF. PAGE:

CONDITIONS OF SERVICE, EACH PUMP

LIQUID: ACTIVE WASTEWATER

GPM REQ'D. AT RATED PT: 8.8 DISCH. PRESS. 1503 PSIG

PT °F RATED: 60 MAX. SUCTION PRESS. PSIG 14 MAX 13 RATED

SG AT RATED PT: 1.0 DIFF. PRESS. PSI: 1506

VP AT RATED PT PSIA: 0.2563 DIFF. HEAD FT.: 3477

VISC. AT RATED PT. ☐ SSU ☒ CS: 1.13 NPSHA (INCL. ACC. HEAD) FT.: 16

CORR./EROS. CAUSED BY:

COLD START TEMP. °F: @SG: & VISC.: CS/SSU

CONSTRUCTION

NOZZLES	SIZE	RATING	FACING	LOCATION
SUCTION				
DISCH.				

BEARINGS:

CRANKSHAFT MAIN

CONNECTING ROD

CROSS HEAD

LUBRICATION: ☐ PRESS. ☐ SPLASH ☐ MIST

PACKING: MFG.

TYPE: SIZE:

SUCTION VALVES: NO.: SIZE: AREA: IN²:

VELOCITY, RATED FPM MAX. FPM

DISCHARGE VALVES: NO.: SIZE: AREA: IN²:

VELOCITY, RATED FPM MAX. FPM

COUPLING: MFG.: TYPE:

GUARDS:

DRIVES

V-BELTS: MFG.: TYPE:

NO.: RATIO:

GEARS: ☐ INTERNAL ☐ EXTERNAL

MFG.: RATIO:

VARIABLE SPEED DRIVE: MFG.:

SIZE AND TYPE: SEE PAGE

INPUT SPEED: RPM. CRANK SPEED: RPM

PULSATION DAMPENERS

LOCATION	MFG.	SIZE	% P TO P	INTERNALS	CODE & STAMP
SUCTION					
DISCH.					

MOTOR DRIVER

HP: 10 RPM: FRAME: VOLTS/PH/HZ: 460/3/60

MFG.: TYPE: SQUIRREL CAGE INDUCTION

NEMA DESIGN: ENCLOSURE:

RATED AMBIENT TEMP. 40°C INSUL. CLASS:

ELEVATION: FULL LOAD AMPS:

SPACE HEATERS: BASEPLATE:

MOUNTING LOCATION:

PERFORMANCE

RATED GPM: 7.7 MAX. GPM:

NPSHR. FT.:

RATED BHP: 7.1

EFF. % VOLUMETRIC: MECH.:

RATED PISTON SPEED: FPM

MAX. PISTON SPEED: FPM

RELIEF VALVE SETTING: PSIG

MAX. CYL. WP: PSIG AT °F

RELIEF VALVE ☐ INTERNAL ☐ BY OTHERS

HORSEPOWER AT RV SETTING:

COLD START HP.:

SHOP TESTS

NON-WIT.	WITNESSED
☐ PERFORM.	☐ PERFORM.
☒ HYDRO	☐ HYDRO
☐ NPSH	☐ NPSH

☐ SHOP INSPECTION

☐ DISM. & INSPECT. AFTER TEST

WEIGHTS - LBS.

PUMP & BASE: MOTOR:

GEAR: TOTAL: 750

MATERIALS

CYLINDER: SS - 316

CYLINDER LINER: SS-316

PISTON/PLUNGER:

RINGS AND BANDS:

PISTON ROD:

PACKING:

STUFFING BOX:

LANTERN RING:

PACKING GLAND:

VALVES:

VALVE SEATS:

VALVE SPRINGS:

CODE REQUIREMENTS AND SPECS.:

REMARKS:

9413227.0722

UNITED ENGINEERS & CONSTRUCTORS A Raytheon Company Western Operations	EQUIPMENT DATA SHEET ☒ CDR ☐ TITLE I ☐ TITLE II ☐ TITLE III	ITEM NUMBER P-04-251	PAGE 1 OF 1

CUSTOMER & LOCATION	PROJECT	UE&C JOB NO. 6237.006	DATE: 04/16/92
DOE-RL/WHC HANFORD, WA	WRAP FACILITY MODULE 2A	ACCOUNT NO.	BY: VAW

REVISIONS (DATE & BY)	A		B		C		D	
	E		F		G		H	

SERVICE	MANUFACTURER	SOURCE OF QUOTE
GROUT AREA SUMP PUMP		

NO. PUMPS REQ'D: 1	SIZE & TYPE:		NO. OF STAGES: 1	
NO. MOTORS REQ'D: 1	ITEM NO.:	PROVIDED BY:	MTD BY:	REF. PAGE:
NO. TURBINES REQ'D:	ITEM NO.:	PROVIDED BY:	MTD BY:	REF. PAGE:

CONDITIONS OF SERVICE EACH PUMP

LIQUID: ACTIVE WASTE WATER				
GPM AT PT. NOR.: 28	RATED: 30	DISCH. PRESS: 11 PSIG		
PT °F RATED: 60	MAX.	SUCT. PRESS. PSIG: 14	MAX. 13 RATED	
SP GR. AT RATED PT.: 1.0	DIFF. PRES. PSI: 13			
VAP. PRESS. AT RATED P. PSIA: 0.2563	DIFF. HEAD. FT: 30			
VIS. AT RATED PT. ☐ SSU ☒ CP: 1.13	NPSHA. FT: 25			
CORR/EROS. CAUSED BY:	CORR ALLOW.:			
COLD START TEMP °F:	SP GR:		& VIS:	

PERFORMANCE

PROPOSAL CURVE NO.:	
RPM:	NPSHR (WATER) (H.C.)
EFF.:	BHP RATED: .4
MAX. BHP RATED IMP:	
MAX. HEAD RATED IMP: 30 FT	
MIN. CONTINUOUS GPM:	
ROTATION (VIEWED FROM CPLG END):	
COLD START GHP:	

CONSTRUCTION

NOZZLES	SIZE	RATING	FACINGS	LOCATION
SUCTION				
DISCHARGE				

CASE-MOUNT	☐ CENTERLINE	☐ FOOT	☐ BRACKET	☐ VERT (TYPE)
CASE-SPLIT	☐ AXIAL	☐ RADIAL	TYPE SUCTION	☐ SGL ☐ DBL
CASE-PRESSURE	MAX. ALLOW: PSIG CF	HYDRO TEST: PSIG		
CASE-CONNECT	☐ VENT	☐ DRAIN	☐ GAGE	
IMPELLER DIA.	RATED:	MAX.:	MIN.:	TYPE:
IMPELLER MOUNT	☐ BETWEEN BRGS	☐ OVERHUNG		
BEARING-TYPE	RADIAL:	THRUST:		
LUBRICATION	☐ RING OIL ☐ FLOOD ☐ OIL MIST ☐ FLINGER ☐ PRESSURE ☐ GREASE			
COUPLING	MFR	MODEL	☐ GUARD	
DRIVER HALF MTD BY	☐ PUMP MFR.	☐ DRIVER MFR.	☐ PURCHASER	
PACKING	MFR. & TYPE:		SIZE/NO OF RINGS:	
MECH SEAL	MFR. & MODEL:		API CLASS. CODE:	
	MFR. CODE:			

SHOP TESTS

☐ NON-WIT. PERF. ☐ WIT. PERF.
☒ NON-WIT. HYDRO ☐ WIT. HYDRO
☐ NPSH REQ'D. ☐ WIT. NPSH
☐ SHOP INSPECTION
☐ DISMANT. & INSP. AFTER TEST
☐ OTHER

MATERIALS

PUMP: CASE/TRIM CLASS: SS - 316

AUXILIARIES

C.W. PIPE PLAN API 610	☐ CU ☐ SS ☐ CS ☐ TUBING ☐ PIPE BY			
TOTAL COOLING WATER	OF	PSIG	MAX A T	☐ SIGHT F 1 REQ'D
PACKING COOLING INJECTION REQ'D	TOTAL GPM		PSIG	
SEAL FLUSH PLAN API 610	☐ CS ☐ SS ☐ TUBING ☐ PIPE BY			
EXTERNAL SEAL FLUSH FLUID		GPM	PSIG	
AUXILIARY SEAL PLAN API 610	☐ CS ☐ SS ☐ TUBING ☐ PIPE BY			
AUX SEAL QUENCH FLUID:				

VERTICAL PUMPS

PIT OR SLUMP DEPTH:		
MIN. SUBMERGENCE REQ'D:		
COLUMN	☐	☐ THREADED
LINE SHAFT	☐ OPEN	☐ ENCLOSED
BRGS	BOWL	LINE SHAFT
BRG. LUBE	☐ PUMP FLUID	☐ OIL ☐ GREASE
☐ STRAINER		

MOTOR DRIVER

HP: 1.5	RPM: 1,750	FRAME:	VOLTS/PHASE/HZ: 460/3/60	
MFR:	TYPE: SQUIRREL GAGE INDUCTION		NEMA DESIGN	PUMP THRUST: LB UP DOWN
ENCLOSURE:	RATED AMBIENT TEMP 40° C		INSUL. CLASS	LENGTH BELOW MOUNTING FLANGE:
ELEVATION: FT	FULL LOAD AMPS		SPACE HEATERS	

APPROXIMATE WEIGHTS	PUMP & BASE: 500 LBS TOTAL	MOTOR:	GEAR:	TURBINE:

CODE REQUIREMENTS & SPECS:

REMARKS:

UNITED ENGINEERS & CONSTRUCTORS
A Raytheon Company
Western Operations

EQUIPMENT DATA SHEET

☒ CDR ☐ TITLE I ☐ TITLE II ☐ TITLE III

ITEM NUMBER: P-05-203

PAGE: 1 OF 1

CUSTOMER & LOCATION: DOE-RL/WHC HANFORD, WA

PROJECT: WRAP FACILITY MODULE 2A

UE&C JOB NO.: 6237.006

DATE: 06/19/92

ACCOUNT NO.:

BY: JPJ

REVISIONS (DATE & BY)								
	A		B		C		D	
	E		F		G		H	

SERVICE: EXCESS WATER PUMP	MANUFACTURER	SOURCE OF QUOTE

NO. PUMPS REQ'D: 1	SIZE & TYPE:		NO. OF STAGES: 1	
NO. MOTORS REQ'D: 1	ITEM NO.:	PROVIDED BY:	MTD BY:	REF. PAGE:
NO. TURBINES REQ'D:	ITEM NO.:	PROVIDED BY:	MTD BY:	REF. PAGE:

CONDITIONS OF SERVICE, EACH PUMP

LIQUID: WATER WITH SUSPENDED GRIT				
GPM AT PT. NOR.: 5	RATED:	DISCH. PRESS: PSIG		
PT °F RATED:	MAX.	SUCT. PRESS. PSIG: MAX.	RATED	
SP GR. AT RATED PT.: 1.0	DIFF. PRES. PSI: 5			
VAP. PRESS. AT RATED P. PSIA:	DIFF. HEAD. FT:			
VIS. AT RATED: ☐ PT. ☐ CP:	NPSHA. FT:			
CORR/EROS. CAUSED BY: GRIT (1)	CORR ALLOW.:			
COLD START TEMP °F:	SP GR:	& VIS:		

PERFORMANCE

PROPOSAL CURVE NO.:	
RPM:	NPSHR (WATER) (H.C.)
EFF.:	BHP RATED: 0.05
MAX. BHP RATED IMP:	
MAX. HEAD RATED IMP:	
MIN. CONTINUOUS GPM:	
ROTATION (VIEWED FROM CPLG END):	
COLD START GHP:	

CONSTRUCTION

NOZZLES	SIZE	RATING	FACINGS	LOCATION
SUCTION				
DISCHARGE				

CASE-MOUNT	☐ CENTERLINE	☐ FOOT	☐ BRACKET	☐ VERT (TYPE)
CASE-SPLIT	☐ AXIAL	☐ RADIAL	TYPE SUCTION	☐ SGL ☐ DBL
CASE-PRESSURE	MAX. ALLOW: PSIG CF	HYDRO TEST: PSIG		
CASE-CONNECT	☐ VENT	☐ DRAIN	☐ GAGE	
IMPELLER DIA.	RATED:	MAX.:	MIN.:	TYPE:
IMPELLER MOUNT	☐ BETWEEN BRGS	☐ OVERHUNG		
BEARING-TYPE	RADIAL:	THRUST:		
LUBRICATION	☐ RING OIL ☐ FLOOD ☐ OIL MIST ☐ FLINGER ☐ PRESSURE ☐ GREASE			
COUPLING	MFR	MODEL	☐ GUARD	
DRIVER HALF MTD BY	☐ PUMP MFR.	☐ DRIVER MFR.	☐ PURCHASER	
PACKING	MFR. & TYPE:		SIZE/NO OF RINGS:	
MECH SEAL	MFR. & MODEL:		API CLASS. CODE:	
	MFR. CODE:			

SHOP TESTS

☐ NON-WIT. PERF. ☐ WIT. PERF.
☒ NON-WIT. HYDRO ☐ WIT. HYDRO
☐ NPSH REQ'D. ☐ WIT. NPSH
☐ SHOP INSPECTION
☐ DISMANT. & INSP. AFTER TEST
☐ OTHER

MATERIALS

PUMP: CASE/TRIM CLASS: 316 SS

BASEPLATE:

VERTICAL PUMPS

PIT OR SLUMP DEPTH:

MIN. SUBMERGENCE REQ'D:

COLUMN	☐	☐ THREADED
LINE SHAFT	☐ OPEN	☐ ENCLOSED
BRGS	BOWL	LINE SHAFT
BRG. LUBE	☐ PUMP FLUID	☐ OIL ☐ GREASE
☐ STRAINER		

AUXILIARIES

C.W. PIPE PLAN API 610	☐ CU ☐ SS ☐ CS ☐ TUBING ☐ PIPE BY			
TOTAL COOLING WATER	OF	PSIG	MAX A T	☐ SIGHT F 1 REQ'D
PACKING COOLING INJECTION REQ'D	TOTAL GPM		PSIG	
SEAL FLUSH PLAN API 610	☐ CS ☐ SS ☐ TUBING ☐ PIPE BY			
EXTERNAL SEAL FLUSH FLUID	GPM	PSIG		
AUXILIARY SEAL PLAN API 610	☐ CS ☐ SS ☐ TUBING ☐ PIPE BY			
AUX SEAL QUENCH FLUID:				

MOTOR DRIVER

HP: 1.8	RPM:	FRAME:	VOLTS/PHASE/HZ:
MFR:	TYPE: SQUIRREL GAGE INDUCTION	NEMA DESIGN	
ENCLOSURE:	RATED AMBIENT TEMP 40° C	INSUL. CLASS	
ELEVATION: FT	FULL LOAD AMPS	SPACE HEATERS	

PUMP THRUST: LB UP DOWN

LENGTH BELOW MOUNTING FLANGE:

APPROXIMATE WEIGHTS	PUMP & BASE:	MOTOR:	GEAR:	TURBINE:

CODE REQUIREMENTS & SPECS:

REMARKS: (1) GRIT COMPOSED OF PORTLAND CEMENT AND BLAST FURNACE SLAG

9413227.0724

UNITED ENGINEERS & CONSTRUCTORS A Raytheon Company Western Operations	EQUIPMENT DATA SHEET ☒ CDR ☐ TITLE I ☐ TITLE II ☐ TITLE III	ITEM NUMBER P-05-201	PAGE 1 OF 1

CUSTOMER & LOCATION	PROJECT	UE&C JOB NO. 6237.006	DATE: 05/19/92
DOE-RL/WHC HANFORD, WA	WRAP FACILITY MODULE 2A	ACCOUNT NO.	BY: JPJ

REVISIONS (DATE & BY)	A		B		C		D	
	E		F		G		H	

SERVICE	MANUFACTURER	SOURCE OF QUOTE
VIBRO GROUT MIXER/PUMP		

NO. PUMPS REQ'D: 1	SIZE & TYPE: SPECIAL LOW SHEAR MIXER/PUMP		NO. OF STAGES: 1	
NO. MOTORS REQ'D: 1	ITEM NO.:	PROVIDED BY:	MTD BY:	REF. PAGE:
NO. TURBINES REQ'D:	ITEM NO.:	PROVIDED BY:	MTD BY:	REF. PAGE:

CONDITIONS OF SERVICE, EACH PUMP

LIQUID: CEMENT GROUT MIX (OPC, BFS, H_2O, TYP)				
GPM AT PT. NOR.: 15-20	RATED:	DISCH. PRESS: PSIG		
PT °F RATED:	MAX.	SUCT. PRESS. PSIG:	MAX.	RATED
SP GR. AT RATED PT.: 1.2	DIFF. PRES. PSI: 15			
VAP. PRESS. AT RATED P. PSIA:	DIFF. HEAD. FT:			
VIS. AT RATED: ☐ PT. ☐ CP:	NPSHA. FT:			
CORR/EROS. CAUSED BY: BFS	CORR ALLOW.:			
COLD START TEMP °F:	SP GR:		& VIS:	

PERFORMANCE

PROPOSAL CURVE NO.:	
RPM:	NPSHR (WATER) (H.C.)
EFF.:	BHP RATED: 0.75
MAX. BHP RATED IMP:	
MAX. HEAD RATED IMP:	
MIN. CONTINUOUS GPM:	
ROTATION (VIEWED FROM CPLG END):	
COLD START GHP:	

CONSTRUCTION

NOZZLES	SIZE	RATING	FACINGS	LOCATION
SUCTION				
DISCHARGE				

CASE-MOUNT	☐ CENTERLINE	☐ FOOT	☐ BRACKET	☐ VERT (TYPE)
CASE-SPLIT	☐ AXIAL	☐ RADIAL	TYPE SUCTION	☐ SGL ☐ DBL
CASE-PRESSURE	MAX. ALLOW: PSIG	CF	HYDRO TEST:	PSIG
CASE-CONNECT	☐ VENT	☐ DRAIN		☐ GAGE
IMPELLER DIA.	RATED:	MAX.:	MIN.:	TYPE:
IMPELLER MOUNT	☐ BETWEEN BRGS		☐ OVERHUNG	
BEARING-TYPE	RADIAL:		THRUST:	
LUBRICATION	☐ RING OIL ☐ FLOOD ☐ OIL MIST ☐ FLINGER ☐ PRESSURE ☐ GREASE			
COUPLING	MFR	MODEL	☐ GUARD	
DRIVER HALF MTD BY	☐ PUMP MFR.	☐ DRIVER MFR.	☐ PURCHASER	
PACKING	MFR. & TYPE:		SIZE/NO OF RINGS:	
MECH SEAL	MFR. & MODEL:		API CLASS. CODE:	
	MFR. CODE:			

SHOP TESTS

☐ NON-WIT. PERF. ☐ WIT. PERF.
☒ NON-WIT. HYDRO ☐ WIT. HYDRO
☐ NPSH REQ'D. ☐ WIT. NPSH
☐ SHOP INSPECTION
☐ DISMANT. & INSP. AFTER TEST
☐ OTHER

MATERIALS

PUMP: CASE/TRIM CLASS: 316 SS

BASEPLATE:

VERTICAL PUMPS

PIT OR SLUMP DEPTH:

MIN. SUBMERGENCE REQ'D:

COLUMN	☐	☐ THREADED
LINE SHAFT	☐ OPEN	☐ ENCLOSED
BRGS	BOWL	LINE SHAFT
BRG. LUBE	☐ PUMP FLUID	☐ OIL ☐ GREASE
☐ STRAINER		

AUXILIARIES

C.W. PIPE PLAN API 610	☐ CU ☐ SS ☐ CS ☐ TUBING ☐ PIPE BY			
TOTAL COOLING WATER	OF	PSIG	MAX A T	☐ SIGHT F 1 REQ'D
PACKING COOLING INJECTION REQ'D		TOTAL GPM		PSIG
SEAL FLUSH PLAN API 610	☐ CS ☐ SS ☐ TUBING ☐ PIPE BY			
EXTERNAL SEAL FLUSH FLUID			GPM	PSIG
AUXILIARY SEAL PLAN API 610	☐ CS ☐ SS ☐ TUBING ☐ PIPE BY			
AUX SEAL QUENCH FLUID:				

MOTOR DRIVER

HP: 1	RPM:	FRAME:	VOLTS/PHASE/HZ:	
MFR:	TYPE: SQUIRREL GAGE INDUCTION		NEMA DESIGN	
ENCLOSURE:	RATED AMBIENT TEMP 40° C		INSUL. CLASS	
ELEVATION: FT	FULL LOAD AMPS		SPACE HEATERS	

PUMP THRUST: LB UP DOWN

LENGTH BELOW MOUNTING FLANGE:

APPROXIMATE WEIGHTS	PUMP & BASE:	MOTOR:	GEAR:	TURBINE:

CODE REQUIREMENTS & SPECS:

REMARKS: BFS = BLAST FURNACE SLAG

UNITED ENGINEERS & CONSTRUCTORS A Raytheon Company Western Operations	EQUIPMENT DATA SHEET ☒ CDR ☐ TITLE I ☐ TITLE II ☐ TITLE III	ITEM NUMBER P-06-301	PAGE 1 OF 1

CUSTOMER & LOCATION	PROJECT	UE&C JOB NO. 6237.006	DATE: 04/06/92
DOE-RL/WHC HANFORD, WA	WRAP FACILITY MODULE 2A	ACCOUNT NO.	BY: RLH

REVISIONS (DATE & BY)	A		B		C		D	
	E		F		G		H	

SERVICE	MANUFACTURER	SOURCE OF QUOTE
SCRUBBER CIRCULATION PUMP		

NO. PUMPS REQ'D: 1	SIZE & TYPE:		NO. OF STAGES: 1	
NO. MOTORS REQ'D: 1	ITEM NO.:	PROVIDED BY:	MTD BY:	REF. PAGE:
NO. TURBINES REQ'D:	ITEM NO.:	PROVIDED BY:	MTD BY:	REF. PAGE:

CONDITIONS OF SERVICE, EACH PUMP

LIQUID: SCRUBBING WATER				
GPM AT PT. NOR.:	RATED: 2	DISCH. PRESS: 10 PSIG		
PT °F RATED: 60	MAX. 140	SUCT. PRESS. PSIG:	MAX.	RATED
SP GR. AT RATED PT.: 1.0	DIFF. PRES. PSI: 10			
VAP. PRESS. AT RATED P. PSIA: .02563	DIFF. HEAD. FT: 23.0			
VIS. AT RATED: ☐ PT. ☒ CP: 1.0	NPSHA. FT:			
CORR/EROS. CAUSED BY:	CORR ALLOW.:			
COLD START TEMP °F:	SP GR:		& VIS:	

PERFORMANCE

PROPOSAL CURVE NO.:	
RPM:	NPSHR (WATER) (H.C.)
EFF.:	BHP RATED: .02
MAX. BHP RATED IMP:	
MAX. HEAD RATED IMP: 30 FT	
MIN. CONTINUOUS GPM:	
ROTATION (VIEWED FROM CPLG END):	
COLD START GHP:	

CONSTRUCTION

NOZZLES	SIZE	RATING	FACINGS	LOCATION
SUCTION				
DISCHARGE				

CASE-MOUNT	☐ CENTERLINE	☐ FOOT	☐ BRACKET	☐ VERT (TYPE)
CASE-SPLIT	☐ AXIAL	☐ RADIAL	TYPE SUCTION	☐ SGL ☐ DBL
CASE-PRESSURE	MAX. ALLOW: PSIG	CF	HYDRO TEST:	PSIG
CASE-CONNECT	☐ VENT	☐ DRAIN		☐ GAGE
IMPELLER DIA.	RATED:	MAX.:	MIN.:	TYPE:
IMPELLER MOUNT	☐ BETWEEN BRGS		☐ OVERHUNG	
BEARING-TYPE	RADIAL:		THRUST:	
LUBRICATION	☐ RING OIL ☐ FLOOD ☐ OIL MIST ☐ FLINGER ☐ PRESSURE ☐ GREASE			
COUPLING	MFR	MODEL	☐ GUARD	
DRIVER HALF MTD BY	☐ PUMP MFR.	☐ DRIVER MFR.	☐ PURCHASER	
PACKING	MFR. & TYPE:		SIZE/NO OF RINGS:	
MECH SEAL	MFR. & MODEL:		API CLASS. CODE:	
	MFR. CODE:			

SHOP TESTS

☐ NON-WIT. PERF. ☐ WIT. PERF.
☒ NON-WIT. HYDRO ☐ WIT. HYDRO
☐ NPSH REQ'D. ☐ WIT. NPSH
☐ SHOP INSPECTION
☐ DISMANT. & INSP. AFTER TEST
☐ OTHER

MATERIALS

PUMP: CASE/TRIM CLASS: SS 316

BASEPLATE:

VERTICAL PUMPS

PIT OR SLUMP DEPTH:
MIN. SUBMERGENCE REQ'D:

COLUMN	☐	☐ THREADED
LINE SHAFT	☐ OPEN	☐ ENCLOSED
BRGS	BOWL	LINE SHAFT
BRG. LUBE	☐ PUMP FLUID	☐ OIL ☐ GREASE
☐ STRAINER		

AUXILIARIES

C.W. PIPE PLAN API 610	☐ CU ☐ SS ☐ CS ☐ TUBING ☐ PIPE BY			
TOTAL COOLING WATER	OF	PSIG	MAX A T	☐ SIGHT F 1 REQ'D
PACKING COOLING INJECTION REQ'D	TOTAL GPM			PSIG
SEAL FLUSH PLAN API 610	☐ CS ☐ SS ☐ TUBING ☐ PIPE BY			
EXTERNAL SEAL FLUSH FLUID			GPM	PSIG
AUXILIARY SEAL PLAN API 610	☐ CS ☐ SS ☐ TUBING ☐ PIPE BY			
AUX SEAL QUENCH FLUID:				

MOTOR DRIVER

HP: 1/3	RPM: 3,450	FRAME: 120/1/60	VOLTS/PHASE/HZ:
MFR:	TYPE: SQUIRREL GAGE INDUCTION		NEMA DESIGN
ENCLOSURE:	RATED AMBIENT TEMP 40° C		INSUL. CLASS
ELEVATION: FT	FULL LOAD AMPS	SPACE HEATERS	

PUMP THRUST: LB UP DOWN
LENGTH BELOW MOUNTING FLANGE:

APPROXIMATE WEIGHTS	PUMP & BASE: 50 LBS TOTAL	MOTOR:	GEAR:	TURBINE:

CODE REQUIREMENTS & SPECS:

REMARKS:

9413227.0726

UNITED ENGINEERS & CONSTRUCTORS A Raytheon Company Western Operations	EQUIPMENT DATA SHEET ☒ CDR ☐ TITLE I ☐ TITLE II ☐ TITLE III	ITEM NUMBER P-07-101A,B	PAGE 1 OF 1

CUSTOMER & LOCATION	PROJECT	UE&C JOB NO. 6237.006	DATE: 04/10/92
DOE-RL/WHC HANFORD, WA	WRAP FACILITY MODULE 2A	ACCOUNT NO.	BY: TPS

REVISIONS (DATE & BY)	A		B		C		D	
	E		F		G		H	

SERVICE	MANUFACTURER	SOURCE OF QUOTE
NON-ACTIVE WASTE PUMPS A,B		

NO. PUMPS REQ'D: 2	SIZE & TYPE:		NO. OF STAGES: 1	
NO. MOTORS REQ'D: 2	ITEM NO.:	PROVIDED BY:	MTD BY:	REF. PAGE:
NO. TURBINES REQ'D:	ITEM NO.:	PROVIDED BY:	MTD BY:	REF. PAGE:

CONDITIONS OF SERVICE, EACH PUMP

LIQUID: WATER					
GPM AT PT. NOR.: 13	RATED: 15	DISCH. PRESS: 20 PSIG			
PT °F RATED: 60°F	MAX.	SUCT. PRESS. PSIG: 1.6	MAX. -0.775	RATED	
SP GR. AT RATED PT.: 1.0	DIFF. PRES. PSI: 20				
VAP. PRESS. AT RATED P. PSIA: 0.2563	DIFF. HEAD. FT: 47				
VIS. AT RATED: ☐ PT. ☒ CP: 1.13	NPSHA. FT: 29				
CORR/EROS. CAUSED BY:	CORR ALLOW.:				
COLD START TEMP °F:	SP GR:	& VIS:			

PERFORMANCE

PROPOSAL CURVE NO.:	
RPM:	NPSHR (WATER) (H.C.)
EFF.:	BHP RATED: 0.30
MAX. BHP RATED IMP:	
MAX. HEAD RATED IMP: 30 FT	
MIN. CONTINUOUS GPM:	
ROTATION (VIEWED FROM CPLG END):	
COLD START GHP:	

CONSTRUCTION

NOZZLES	SIZE	RATING	FACINGS	LOCATION
SUCTION	1.5"	NPT		HORIZONTAL
DISCHARGE	1"	STO TAPER PIPE		VERTICAL

CASE-MOUNT	☐ CENTERLINE	☒ FOOT	☐ BRACKET	☐ VERT (TYPE)	
CASE-SPLIT	☐ AXIAL	☒ RADIAL	TYPE SUCTION	☐ SGL	☐ DBL
CASE-PRESSURE	MAX. ALLOW: PSIG	CF	HYDRO TEST: PSIG		
CASE-CONNECT	☐ VENT	☐ DRAIN	☐ GAGE		
IMPELLER DIA.	RATED:	MAX.:	MIN.:	TYPE:	
IMPELLER MOUNT	☐ BETWEEN BRGS	☐ OVERHUNG			
BEARING-TYPE	RADIAL:	THRUST:			
LUBRICATION	☐ RING OIL ☐ FLOOD ☐ OIL MIST ☐ FLINGER ☐ PRESSURE ☐ GREASE				
COUPLING	MFR	MODEL: MAGNETIC	☐ GUARD		
DRIVER HALF MTD BY	☒ PUMP MFR.	☐ DRIVER MFR.	☐ PURCHASER		
PACKING	MFR. & TYPE: NONE	SIZE/NO OF RINGS:			
MECH SEAL	MFR. & MODEL: SEAL-LESS	API CLASS. CODE:			
	MFR. CODE:				

SHOP TESTS

☐ NON-WIT. PERF. ☐ WIT. PERF.
☒ NON-WIT. HYDRO ☐ WIT. HYDRO
☐ NPSH REQ'D. ☐ WIT. NPSH
☐ SHOP INSPECTION
☐ DISMANT. & INSP. AFTER TEST
☐ OTHER

MATERIALS

PUMP: CASE/TRIM CLASS: 316 SS

AUXILIARIES

C.W. PIPE PLAN API 610	☐ CU	☐ SS	☐ CS	☐ TUBING	☐ PIPE BY
TOTAL COOLING WATER	OF	PSIG	MAX A T	☐ SIGHT F 1 REQ'D	
PACKING COOLING INJECTION REQ'D	TOTAL GPM	PSIG			
SEAL FLUSH PLAN API 610	☐ CS	☐ SS	☐ TUBING	☐ PIPE BY	
EXTERNAL SEAL FLUSH FLUID	GPM	PSIG			
AUXILIARY SEAL PLAN API 610	☐ CS	☐ SS	☐ TUBING	☐ PIPE BY	
AUX SEAL QUENCH FLUID:					

VERTICAL PUMPS

PIT OR SLUMP DEPTH:		
MIN. SUBMERGENCE REQ'D:		
COLUMN	☐	☐ THREADED
LINE SHAFT	☐ OPEN	☐ ENCLOSED
BRGS	BOWL	LINE SHAFT
BRG. LUBE	☐ PUMP FLUID	☐ OIL ☐ GREASE
☐ STRAINER		

MOTOR DRIVER

HP: 3/4	RPM: 3,450	FRAME:	VOLTS/PHASE/HZ: 460/3/60	
MFR:	TYPE: SQUIRREL GAGE INDUCTION		NEMA DESIGN	
ENCLOSURE: TEFC	RATED AMBIENT TEMP 40° C		INSUL. CLASS	
ELEVATION: FT	FULL LOAD AMPS: 1-1	SPACE HEATERS		

PUMP THRUST: LB	UP	DOWN		
LENGTH BELOW MOUNTING FLANGE:				

APPROXIMATE WEIGHTS	PUMP & BASE: 44 LBS TOTAL	MOTOR:	GEAR:	TURBINE:

CODE REQUIREMENTS & SPECS:

REMARKS:

UNITED ENGINEERS & CONSTRUCTORS A Raytheon Company Western Operations	EQUIPMENT DATA SHEET ☒ CDR ☐ TITLE I ☐ TITLE II ☐ TITLE III	ITEM NUMBER P-07-102	PAGE 1 OF 1

CUSTOMER & LOCATION	PROJECT	UE&C JOB NO. 6237.006	DATE: 04/13/92
DOE-RL/WHC HANFORD, WA	WRAP FACILITY MODULE 2A	ACCOUNT NO.	BY: TPS

REVISIONS (DATE & BY)	A		B		C		D	
	E		F		G		H	

SERVICE	MANUFACTURER	SOURCE OF QUOTE
NON-ACTIVE SUMP PUMP		

NO. PUMPS REQ'D: 1	SIZE & TYPE:		NO. OF STAGES: 1	
NO. MOTORS REQ'D: 1	ITEM NO.:	PROVIDED BY:	MTD BY:	REF. PAGE:
NO. TURBINES REQ'D:	ITEM NO.:	PROVIDED BY:	MTD BY:	REF. PAGE:

CONDITIONS OF SERVICE, EACH PUMP

LIQUID: WATER				
GPM AT PT. NOR.: 15	RATED: 16.5	DISCH. PRESS: 5 PSIG		
PT °F RATED: 60°F	MAX.	SUCT. PRESS. PSIG: 0.9 MAX.	0 RATED	
SP GR. AT RATED PT.: 1.0	DIFF. PRES. PSI: 5			
VAP. PRESS. AT RATED P. PSIA: 0.2563	DIFF. HEAD. FT: 10			
VIS. AT RATED: ☐ PT. ☒ CP: 1.13	NPSHA. FT: 30			
CORR/EROS. CAUSED BY:	CORR ALLOW.:			
COLD START TEMP °F:	SP GR:	& VIS:		

PERFORMANCE

PROPOSAL CURVE NO.:	
RPM:	NPSHR (WATER) (H.C.)
EFF.:	BHP RATED: 0.06
MAX. BHP RATED IMP:	
MAX. HEAD RATED IMP: 30 FT	
MIN. CONTINUOUS GPM:	
ROTATION (VIEWED FROM CPLG END):	
COLD START GHP:	

CONSTRUCTION

NOZZLES	SIZE	RATING	FACINGS	LOCATION
SUCTION				
DISCHARGE				

CASE-MOUNT	☐ CENTERLINE	☐ FOOT	☐ BRACKET	☐ VERT (TYPE)
CASE-SPLIT	☐ AXIAL	☐ RADIAL	TYPE SUCTION	☐ SGL ☐ DBL
CASE-PRESSURE	MAX. ALLOW: PSIG CF	HYDRO TEST: PSIG		
CASE-CONNECT	☐ VENT	☐ DRAIN	☐ GAGE	
IMPELLER DIA.	RATED:	MAX.:	MIN.:	TYPE:
IMPELLER MOUNT	☐ BETWEEN BRGS	☐ OVERHUNG		
BEARING-TYPE	RADIAL:	THRUST:		
LUBRICATION	☐ RING OIL ☐ FLOOD ☐ OIL MIST ☐ FLINGER ☐ PRESSURE ☐ GREASE			
COUPLING	MFR	MODEL	☐ GUARD	
DRIVER HALF MTD BY	☐ PUMP MFR.	☐ DRIVER MFR.	☐ PURCHASER	
PACKING	MFR. & TYPE:		SIZE/NO OF RINGS:	
MECH SEAL	MFR. & MODEL:		API CLASS. CODE:	
	MFR. CODE:			

SHOP TESTS

☐ NON-WIT. PERF. ☐ WIT. PERF.
☒ NON-WIT. HYDRO ☐ WIT. HYDRO
☐ NPSH REQ'D. ☐ WIT. NPSH
☐ SHOP INSPECTION
☐ DISMANT. & INSP. AFTER TEST
☐ OTHER

MATERIALS

PUMP: CASE/TRIM CLASS:

BASEPLATE:

AUXILIARIES

C.W. PIPE PLAN API 610	☐CU ☐ SS ☐ CS ☐ TUBING ☐ PIPE BY			
TOTAL COOLING WATER	OF	PSIG	MAX A T	☐ SIGHT F 1 REQ'D
PACKING COOLING INJECTION REQ'D	TOTAL GPM		PSIG	
SEAL FLUSH PLAN API 610	☐ CS ☐ SS ☐ TUBING ☐ PIPE BY			
EXTERNAL SEAL FLUSH FLUID	GPM	PSIG		
AUXILIARY SEAL PLAN API 610	☐ CS ☐ SS ☐ TUBING ☐ PIPE BY			
AUX SEAL QUENCH FLUID:				

VERTICAL PUMPS

PIT OR SLUMP DEPTH: 2'

MIN. SUBMERGENCE REQ'D:

COLUMN	☐	☐ THREADED
LINE SHAFT	☐ OPEN	☐ ENCLOSED
BRGS	BOWL	LINE SHAFT
BRG. LUBE	☐ PUMP FLUID	☐ OIL ☐ GREASE
☐ STRAINER		

MOTOR DRIVER

HP: 1/4	RPM:	FRAME:	VOLTS/PHASE/HZ: 120/1/60
MFR:	TYPE: SQUIRREL GAGE INDUCTION		NEMA DESIGN
ENCLOSURE:	RATED AMBIENT TEMP 40° C		INSUL. CLASS
ELEVATION: FT	FULL LOAD AMPS	SPACE HEATERS	

PUMP THRUST: LB UP DOWN

LENGTH BELOW MOUNTING FLANGE:

APPROXIMATE WEIGHTS	PUMP & BASE: 310 LBS TOTAL	MOTOR:	GEAR:	TURBINE:

CODE REQUIREMENTS & SPECS:

REMARKS:

9413227.0728

UNITED ENGINEERS & CONSTRUCTORS A Raytheon Company Western Operations	EQUIPMENT DATA SHEET ☒ CDR ☐ TITLE I ☐ TITLE II ☐ TITLE III	ITEM NUMBER P-07-201	PAGE 1 OF 1

CUSTOMER & LOCATION	PROJECT	UE&C JOB NO. 6237.006	DATE: 04/10/92
DOE-RL/WHC HANFORD, WA	WRAP FACILITY MODULE 2A	ACCOUNT NO.	BY: TPS

REVISIONS (DATE & BY)	A		B		C		D	
	E		F		G		H	

SERVICE	MANUFACTURER	SOURCE OF QUOTE
ACTIVE WASTE PUMP		

NO. PUMPS REQ'D: 1	SIZE & TYPE: CENTRIFUGAL		NO. OF STAGES: 1	
NO. MOTORS REQ'D: 1	ITEM NO.:	PROVIDED BY:	MTD BY:	REF. PAGE:
NO. TURBINES REQ'D:	ITEM NO.:	PROVIDED BY:	MTD BY:	REF. PAGE:

CONDITIONS OF SERVICE EACH PUMP

LIQUID: WATER				
GPM AT PT. NOR.: 45	RATED: 50	DISCH. PRESS: 38 PSIG		
PT °F RATED: 60°F	MAX.	SUCT. PRESS. PSIG: 4 MAX.	-2 RATED	
SP GR. AT RATED PT.: 1.0	DIFF. PRES. PSI: 40			
VAP. PRESS. AT RATED P. PSIA: 0.2563	DIFF. HEAD. FT: 93			
VIS. AT RATED: ☐ PT. ☐ CP: 1.13	NPSHA. FT: 26			
CORR/EROS. CAUSED BY:	CORR ALLOW.:			
COLD START TEMP °F:	SP GR:	& VIS:		

PERFORMANCE

PROPOSAL CURVE NO.:	
RPM:	NPSHR (WATER) (H.C.)
EFF.:	BHP RATED: 1.97
MAX. BHP RATED IMP:	
MAX. HEAD RATED IMP: 30 FT	
MIN. CONTINUOUS GPM:	
ROTATION (VIEWED FROM CPLG END):	
COLD START GHP:	

CONSTRUCTION

NOZZLES	SIZE	RATING	FACINGS	LOCATION
SUCTION				
DISCHARGE				

CASE-MOUNT	☐ CENTERLINE	☐ FOOT	☐ BRACKET	☐ VERT (TYPE)	
CASE-SPLIT	☐ AXIAL	☐ RADIAL	TYPE SUCTION	☐ SGL	☐ DBL
CASE-PRESSURE	MAX. ALLOW: PSIG	CF	HYDRO TEST: -	PSIG	
CASE-CONNECT	☐ VENT	☐ DRAIN		☐ GAGE	
IMPELLER DIA.	RATED:	MAX.:	MIN.:	TYPE:	
IMPELLER MOUNT	☐ BETWEEN BRGS		☐ OVERHUNG		
BEARING-TYPE	RADIAL:		THRUST:		
LUBRICATION	☐ RING OIL	☐ FLOOD	☐ OIL MIST	☐ FLINGER	☐ PRESSURE ☐ GREASE
COUPLING	MFR	MODEL	☐ GUARD		
DRIVER HALF MTD BY	☐ PUMP MFR.	☐ DRIVER MFR.	☐ PURCHASER		
PACKING	MFR. & TYPE:		SIZE/NO OF RINGS:		
MECH SEAL	MFR. & MODEL:		API CLASS. CODE:		
	MFR. CODE:				

SHOP TESTS

☐ NON-WIT. PERF. ☐ WIT. PERF.
☒ NON-WIT. HYDRO ☐ WIT. HYDRO
☐ NPSH REQ'D. ☐ WIT. NPSH
☐ SHOP INSPECTION
☐ DISMANT. & INSP. AFTER TEST
☐ OTHER

MATERIALS

PUMP: CASE/TRIM CLASS: 316 SS
BASEPLATE:

VERTICAL PUMPS

PIT OR SLUMP DEPTH:
MIN. SUBMERGENCE REQ'D:

COLUMN	☐	☐ THREADED
LINE SHAFT	☐ OPEN	☐ ENCLOSED
BRGS	BOWL	LINE SHAFT
BRG. LUBE	☐ PUMP FLUID	☐ OIL ☐ GREASE
☐ STRAINER		

AUXILIARIES

C.W. PIPE PLAN API 610	☐CU ☐ SS ☐ CS ☐ TUBING ☐ PIPE BY			
TOTAL COOLING WATER	OF	PSIG	MAX A T	☐ SIGHT F 1 REQ'D
PACKING COOLING INJECTION REQ'D	TOTAL GPM		PSIG	
SEAL FLUSH PLAN API 610	☐ CS ☐ SS ☐ TUBING ☐ PIPE BY			
EXTERNAL SEAL FLUSH FLUID		GPM	PSIG	
AUXILIARY SEAL PLAN API 610	☐ CS ☐ SS ☐ TUBING ☐ PIPE BY			
AUX SEAL QUENCH FLUID:				

MOTOR DRIVER

HP: 3	RPM:	FRAME:	VOLTS/PHASE/HZ: 460/3/60	
MFR:	TYPE: SQUIRREL GAGE INDUCTION		NEMA DESIGN	
ENCLOSURE:	RATED AMBIENT TEMP 40° C		INSUL. CLASS	
ELEVATION: FT	FULL LOAD AMPS		SPACE HEATERS	

PUMP THRUST: LB UP DOWN
LENGTH BELOW MOUNTING FLANGE:

APPROXIMATE WEIGHTS	PUMP & BASE: 155 LBS TOTAL	MOTOR:	GEAR:	TURBINE:

CODE REQUIREMENTS & SPECS:

REMARKS:

UNITED ENGINEERS & CONSTRUCTORS A Raytheon Company Western Operations	EQUIPMENT DATA SHEET ☒ CDR ☐ TITLE I ☐ TITLE II ☐ TITLE III	ITEM NUMBER P-07-202	PAGE 1 OF 1
CUSTOMER & LOCATION: DOE-RL/WHC HANFORD, WA	PROJECT: WRAP FACILITY MODULE 2A	UE&C JOB NO. 6237.006 / ACCOUNT NO.	DATE: 04/13/92 / BY: TPS

REVISIONS (DATE & BY)	A		B		C		D	
	E		F		G		H	

SERVICE	MANUFACTURER	SOURCE OF QUOTE
ACTIVE SUMP PUMP		

NO. PUMPS REQ'D: 1	SIZE & TYPE: VERT.		NO. OF STAGES:	
NO. MOTORS REQ'D: 1	ITEM NO.:	PROVIDED BY:	MTD BY:	REF. PAGE:
NO. TURBINES REQ'D:	ITEM NO.:	PROVIDED BY:	MTD BY:	REF. PAGE:

CONDITIONS OF SERVICE, EACH PUMP

LIQUID: WATER				
GPM AT PT. NOR.: 25	RATED: 27.5	DISCH. PRESS: 8 PSIG		
PT °F RATED: 60°F	MAX.	SUCT. PRESS. PSIG: 0.9 MAX.	0 RATED	
SP GR. AT RATED PT.: 1.0	DIFF. PRES. PSI: 8			
VAP. PRESS. AT RATED P. PSIA: 0.2563	DIFF. HEAD. FT: 18			
VIS. AT RATED: ☐ PT. ☒ CP: 1.13	NPSHA. FT: 30			
CORR/EROS. CAUSED BY:	CORR ALLOW.:			
COLD START TEMP °F:	SP GR:	& VIS:		

PERFORMANCE

PROPOSAL CURVE NO.:	
RPM:	NPSHR (WATER) (H.C.)
EFF.:	BHP RATED: 0.20
MAX. BHP RATED IMP:	
MAX. HEAD RATED IMP: 30 FT	
MIN. CONTINUOUS GPM:	
ROTATION (VIEWED FROM CPLG END):	
COLD START GHP:	

CONSTRUCTION

NOZZLES	SIZE	RATING	FACINGS	LOCATION
SUCTION				
DISCHARGE				

CASE-MOUNT	☐ CENTERLINE	☐ FOOT	☐ BRACKET	☐ VERT (TYPE)
CASE-SPLIT	☐ AXIAL	☐ RADIAL	TYPE SUCTION	☐ SGL ☐ DBL
CASE-PRESSURE	MAX. ALLOW: PSIG CF	HYDRO TEST: PSIG		
CASE-CONNECT	☐ VENT	☐ DRAIN	☐ GAGE	
IMPELLER DIA.	RATED:	MAX.:	MIN.:	TYPE:
IMPELLER MOUNT	☐ BETWEEN BRGS	☐ OVERHUNG		
BEARING-TYPE	RADIAL:	THRUST:		
LUBRICATION	☐ RING OIL ☐ FLOOD ☐ OIL MIST ☐ FLINGER ☐ PRESSURE ☐ GREASE			
COUPLING	MFR	MODEL	☐ GUARD	
DRIVER HALF MTD BY	☐ PUMP MFR.	☐ DRIVER MFR.	☐ PURCHASER	
PACKING	MFR. & TYPE:		SIZE/NO OF RINGS:	
MECH SEAL	MFR. & MODEL:		API CLASS. CODE:	
	MFR. CODE:			

SHOP TESTS

☐ NON-WIT. PERF. ☐ WIT. PERF.
NON-WIT. HYDRO ☐ WIT. HYDRO
☐ NPSH REQ'D. ☐ WIT. NPSH
☐ SHOP INSPECTION
☐ DISMANT. & INSP. AFTER TEST
☐ OTHER

MATERIALS

PUMP: CASE/TRIM CLASS: 316 SS

BASEPLATE:

VERTICAL PUMPS

PIT OR SLUMP DEPTH: 2'

MIN. SUBMERGENCE REQ'D:

COLUMN	☐	☐ THREADED
LINE SHAFT	☐ OPEN	☐ ENCLOSED
BRGS	BOWL	LINE SHAFT
BRG. LUBE	☐ PUMP FLUID	☐ OIL ☐ GREASE
☐ STRAINER		

AUXILIARIES

C.W. PIPE PLAN API 610	☐ CU ☐ SS ☐ CS ☐ TUBING ☐ PIPE BY			
TOTAL COOLING WATER	OF	PSIG	MAX A T	☐ SIGHT F 1 REQ'D
PACKING COOLING INJECTION REQ'D	TOTAL GPM		PSIG	
SEAL FLUSH PLAN API 610	☐ CS ☐ SS ☐ TUBING ☐ PIPE BY			
EXTERNAL SEAL FLUSH FLUID	GPM	PSIG		
AUXILIARY SEAL PLAN API 610	☐ CS ☐ SS ☐ TUBING ☐ PIPE BY			
AUX SEAL QUENCH FLUID:				

MOTOR DRIVER

HP: 1/2	RPM:	FRAME:	VOLTS/PHASE/HZ: 460/3/60
MFR:	TYPE: SQUIRREL GAGE INDUCTION	NEMA DESIGN	
ENCLOSURE:	RATED AMBIENT TEMP 40° C	INSUL. CLASS	
ELEVATION: FT	FULL LOAD AMPS	SPACE HEATERS	

PUMP THRUST: LB UP DOWN

LENGTH BELOW MOUNTING FLANGE:

APPROXIMATE WEIGHTS	PUMP & BASE: 315 LBS TOTAL	MOTOR:	GEAR:	TURBINE:

CODE REQUIREMENTS & SPECS:

REMARKS:

9413227.0730

UNITED ENGINEERS & CONSTRUCTORS
A Raytheon Company
Western Operations

EQUIPMENT DATA SHEET

☒ CDR ☐ TITLE I ☐ TITLE II ☐ TITLE III

ITEM NUMBER: P-07-203

PAGE: 1 OF 1

CUSTOMER & LOCATION: DOE-RL/WHC HANFORD, WA

PROJECT: WRAP FACILITY MODULE 2A

UE&C JOB NO.: 6237.006

DATE: 04/17/92

ACCOUNT NO.:

BY: TPS

REVISIONS (DATE & BY)								
	A		B		C		D	
	E		F		G		H	

SERVICE: TREATED ACTIVE WASTE PUMP

MANUFACTURER:

SOURCE OF QUOTE:

NO. PUMPS REQ'D: 1 | SIZE & TYPE: | NO. OF STAGES:

NO. MOTORS REQ'D: 1 | ITEM NO.: | PROVIDED BY: | MTD BY: | REF. PAGE:

NO. TURBINES REQ'D: | ITEM NO.: | PROVIDED BY: | MTD BY: | REF. PAGE:

CONDITIONS OF SERVICE, EACH PUMP

LIQUID: ACTIVE WASTEWATER

GPM AT PT. NOR.: 25 | RATED: 27.5 | DISCH. PRESS: 20 PSIG

PT °F RATED: 60 | MAX. | SUCT. PRESS. PSIG: 4 | MAX. -0.67 RATED

SP GR. AT RATED PT.: 1.0 | DIFF. PRES. PSI: 20.00

VAP. PRESS. AT RATED P. PSIA: 0.2563 | DIFF. HEAD. FT: 46.2

VIS. AT RATED: ☐ PT. ☒ CP: 1.13 | NPSHA. FT: 28

CORR/EROS. CAUSED BY: | CORR ALLOW.:

COLD START TEMP °F: | SP GR: | & VIS:

PERFORMANCE

PROPOSAL CURVE NO.:

RPM: | NPSHR (WATER) (H.C.)

EFF.: | BHP RATED:

MAX. BHP RATED IMP:

MAX. HEAD RATED IMP: 30 FT

MIN. CONTINUOUS GPM:

ROTATION (VIEWED FROM CPLG END):

COLD START GHP:

CONSTRUCTION

NOZZLES	SIZE	RATING	FACINGS	LOCATION
SUCTION				
DISCHARGE				

CASE-MOUNT: ☐ CENTERLINE ☐ FOOT ☐ BRACKET ☐ VERT (TYPE)

CASE-SPLIT: ☐ AXIAL ☐ RADIAL TYPE SUCTION ☐ SGL ☐ DBL

CASE-PRESSURE: MAX. ALLOW: PSIG CF | HYDRO TEST: PSIG

CASE-CONNECT: ☐ VENT ☐ DRAIN ☐ GAGE

IMPELLER DIA.: RATED: | MAX.: | MIN.: | TYPE:

IMPELLER MOUNT: ☐ BETWEEN BRGS ☐ OVERHUNG

BEARING-TYPE: RADIAL: | THRUST:

LUBRICATION: ☐ RING OIL ☐ FLOOD ☐ OIL MIST ☐ FLINGER ☐ PRESSURE ☐ GREASE

COUPLING: MFR | MODEL | ☐ GUARD

DRIVER HALF MTD BY: ☐ PUMP MFR. ☐ DRIVER MFR. ☐ PURCHASER

PACKING: MFR. & TYPE: | SIZE/NO OF RINGS:

MECH SEAL: MFR. & MODEL: | API CLASS. CODE:

MFR. CODE:

SHOP TESTS

☐ NON-WIT. PERF. ☐ WIT. PERF.
☒ NON-WIT. HYDRO ☐ WIT. HYDRO
☐ NPSH REQ'D. ☐ WIT. NPSH
☐ SHOP INSPECTION
☐ DISMANT. & INSP. AFTER TEST
☐ OTHER

MATERIALS

PUMP: CASE/TRIM CLASS: 316 SS

BASEPLATE:

AUXILIARIES

C.W. PIPE PLAN API 610 ☐CU ☐ SS ☐ CS ☐ TUBING ☐ PIPE BY

TOTAL COOLING WATER | OF | PSIG | MAX A T | ☐ SIGHT F 1 REQ'D

PACKING COOLING INJECTION REQ'D | TOTAL GPM | PSIG

SEAL FLUSH PLAN API 610 ☐ CS ☐ SS ☐ TUBING ☐ PIPE BY

EXTERNAL SEAL FLUSH FLUID | GPM | PSIG

AUXILIARY SEAL PLAN API 610 ☐ CS ☐ SS ☐ TUBING ☐ PIPE BY

AUX SEAL QUENCH FLUID:

VERTICAL PUMPS

PIT OR SLUMP DEPTH:

MIN. SUBMERGENCE REQ'D:

COLUMN ☐ ☐ THREADED

LINE SHAFT ☐ OPEN ☐ ENCLOSED

BRGS BOWL LINE SHAFT

BRG. LUBE ☐ PUMP FLUID ☐ OIL ☐ GREASE

☐ STRAINER

MOTOR DRIVER

HP: 1.5 | RPM: 1,750 | FRAME: | VOLTS/PHASE/HZ: 460/3/60

MFR: | TYPE: SQUIRREL GAGE INDUCTION | NEMA DESIGN

ENCLOSURE: | RATED AMBIENT TEMP 40° C | INSUL. CLASS

ELEVATION: FT | FULL LOAD AMPS | SPACE HEATERS

PUMP THRUST: LB UP DOWN

LENGTH BELOW MOUNTING FLANGE:

APPROXIMATE WEIGHTS | PUMP & BASE: 500 LBS TOTAL | MOTOR: | GEAR: | TURBINE:

CODE REQUIREMENTS & SPECS:

REMARKS:

UNITED ENGINEERS & CONSTRUCTORS A Raytheon Company Western Operations	EQUIPMENT DATA SHEET ☒ CDR ☐ TITLE I ☐ TITLE II ☐ TITLE III	ITEM NUMBER P-12-101	PAGE 1 OF 1

CUSTOMER & LOCATION	PROJECT	UE&C JOB NO. 6237.006	DATE: 05/20/92
DOE-RL/WHC HANFORD, WA	WRAP FACILITY MODULE 2A	ACCOUNT NO.	BY: TPS

REVISIONS (DATE & BY)	A		B		C		D	
	E		F		G		H	

SERVICE	MANUFACTURER	NO. REQ'D.	SOURCE OF QUOTE
ACID DRUM PUMP		1	

CONDITIONS OF SERVICE		DIMENSIONS	
APPLICATION:		A:	F:
DESCRIPTION: SELF PRIMING ROTARY HAND PUMP		B:	G:
LIQUID: 93% SULFURIC ACID	SUCTION LIFT: 5'	C:	H:
PT °F: 60	DIFF HEAD FT: 15'	D:	I:
SP GR AT RATED PT: 1.83	GPM: 5	E:	J:
VAP PRESS AT RATED PT:			
VISCOSITY AT PT, CP: 22			
CONSTRUCTION			
BUNG CONNECTION: 2"			
WETTED PARTS: ALLOY 2D			
WEIGHT: 10 LBS			

9413227.0732

UNITED ENGINEERS & CONSTRUCTORS
A Raytheon Company
Western Operations

EQUIPMENT DATA SHEET

☒ CDR ☐ TITLE I ☐ TITLE II ☐ TITLE III

ITEM NUMBER: P-12-102

PAGE: 1 OF 1

CUSTOMER & LOCATION: DOE-RL/WHC HANFORD, WA

PROJECT: WRAP FACILITY MODULE 2A

UE&C JOB NO.: 6237.006

DATE: 04/17/92

ACCOUNT NO.:

BY: TPS

REVISIONS (DATE & BY)	A		B		C		D	
	E		F		G		H	

SERVICE: ACID METERING PUMP

MANUFACTURER:

NO. REQ'D: 1

SOURCE OF QUOTE:

TYPE PUMP: PLUNGER ☐ DIAPHRAGM ☒ DIRECT ACTING ☐ POWER FRAME ☐

METERING HEADS: SIMPLEX ☒ DUPLEX ☐ TRIPLEX ☐ HEAD GANG ☐

* USE SEPARATE DATA SHEET FOR EACH LIQUID END

MATERIALS

LIQUID END: ALLOY 20
PLUNGER:
CROSS HEAD:
CONN.ROD:
CRANK:
GEAR (DRIVER):
GEAR (DRIVEN):
GEAR HOUSING:
FRAME:
VALVES:
VALVE SEATS:
VALVE BODY:
PACKING: MAX. TEMP. °F:
GASKETS:
DIAPHRAGM: TEFLON MAX. TEMP. °F:
LAND:
LANTERN RING:
VALVE CAPS:

CONNECTIONS

	SIZE	TYPE	RATING
SUCTION			
DISCHARGE			
DRAINS			
FLUSHING			

AIR OR GAS PURGING YES ☐ NO ☐

VALVES REPLACEABLE YES ☐ NO ☐

LIQUID END

LIQUID END BODY: TYPE (PLUNGER) (DIAPHRAGM) (REMOTE) (SUBMERGED)

PLUNGER DIAM: STROKE:

STROKES/MIN/CYLINDER:

S.W.P. W/QUOTED DRIVER SWP W/MAX. DRIVER

VALVES	SUCTION	DISCHARGE
TYPE		
NUMBER		
AREA IN.²		

PLUNGER SUPPORT: (PACKING) (CROSS HEAD)

PACKING SIZE: TYPE:

SPECIAL SEALS:

LUBRICATION

PACING: DRIVER BRGS.:

CONN. ROD BRGS.:

CROSS HEAD: GEARING:

POWER CYLINDER:

HYDRAULIC FLUID (DIAPHRAGM PLUNGER PUMP):

STROKE ADJUSTMENT

MANUAL ☐ AUTO ☐ WHILE RUNNING ☐ OR STOPPED ☐

REMOTE ☐ LOCAL ☐

SIGNAL: PNEUMATIC ☐ ELECTRIC ☐ HYDRAULIC ☐

AUXILIARY FEATURES

JACKETED ☐ STROKE COUNTER ☐

TIMER & MULTIPORT VALVE ☐ SPARE PACKING ☐

DRIVE

ELECTRIC ☒ GAS ☐ AIR ☐ BHP

MAKE: CONSTANT SPEED ☒ VAR. SPEED ☐

RPM: PHASE: FRAME NO.:

ENCLOSURE: FRAME NO.:

FULL LOAD CURRENT: LOCKED ROTOR CURRENT:

POWER CYLINDER: DIAM.: STROKE:

GAS PRESS. SUPPLY: EXHAUST:

GAS CONSUMPTION: SCFM @ MAX. SPEED

SPEED CONTROL ELECT. ☒ PNEUMATIC ☐ MANUAL ☐ AUTOMATIC ☐ NONE ☐

SPEED REDUCER: MFR. INTEG. ☐ SEPARATE ☐

MODEL: RATIO: CLASS.:

COUPLING: MAKE: TYPE:

GUARDS: COUPLING ☐ CRANK ☐

SPEED INDIC. YES ☐ NO ☐ REMOTE ☐ LOCAL ☐

SERVICE CONDITIONS

LIQUID END NO.: 1 LIQ.: 1%-5% H_2SO_4 ☒ (ACID) ☐ (BASIC)

PUMPING TEMP.: 60 °F. VAPOR PRESS. @ P.T.: 0.28

VISCOSITY: 0.5 C.P. SPECIFIC GRAVITY: 1.02

CORROSION OR EROSION FACTORS:

CAPACITY GPH: MAX. 20 MIN. 2.0 NORM. 10.0

SUCT. PRESS. PSIG: MAX. 1.23 MIN. -0.9 NORM. 0.66

DISCH. PRESS. PSIG: MAX. 60 MIN. ATM NORM. 50

NPSH AVAILABLE: 29.2 REQ'D.:

BHP @ RATING: 1/2 HP

BASE PLATE: CARBON STEEL

TEST: HYD. ☒ PERF. ☒ WITNESSED ☐ NOT WITNESSED ☒

REMARKS:

9413227.0733

UNITED ENGINEERS & CONSTRUCTORS A Raytheon Company Western Operations	EQUIPMENT DATA SHEET ☒ CDR ☐ TITLE I ☐ TITLE II ☐ TITLE III	ITEM NUMBER P-12-103	PAGE 1 OF 1

CUSTOMER & LOCATION	PROJECT	UE&C JOB NO. 6237.006	DATE: 06/20/92
DOE-RL/WHC HANFORD, WA	WRAP FACILITY MODULE 2A	ACCOUNT NO.	BY: TPS

REVISIONS (DATE & BY)	A		B		C		D	
	E		F		G		H	

SERVICE	MANUFACTURER	NO. REQ'D.	SOURCE OF QUOTE
CAUSTIC DRUM PUMP		1	

CONDITIONS OF SERVICE		DIMENSIONS	
APPLICATION:		A:	F:
DESCRIPTION: SELF PRIMING ROTARY HAND PUMP		B:	G:
LIQUID: 50% SODIUM HYDROXIDE	SUCTION LIFT: 5'	C:	H:
PT °F: 60	DIFF HEAD FT: 15'	D:	I:
SP GR AT RATED PT: 1.53	GPM: 5	E:	J:
VAP PRESS AT RATED PT:			
VISCOSITY AT PT, CP: 10			
CONSTRUCTION			
BUNG CONNECTION: 2"			
WETTED PARTS; CARBON STEEL			
WEIGHT: 10 LBS			

9W3227.0734

UNITED ENGINEERS & CONSTRUCTORS
A Raytheon Company
Western Operations

EQUIPMENT DATA SHEET

☒ CDR ☐ TITLE I ☐ TITLE II ☐ TITLE III

ITEM NUMBER: P-12-104

PAGE: 1 OF 1

CUSTOMER & LOCATION: DOE-RL/WHC HANFORD, WA

PROJECT: WRAP FACILITY MODULE 2A

UE&C JOB NO.: 6237.006

DATE: 04/17/92

ACCOUNT NO.:

BY: TPS

REVISIONS (DATE & BY): A ___ B ___ C ___ D ___ E ___ F ___ G ___ H ___

SERVICE: SECONDARY WASTE TREATMENT CAUSTIC PUMP

MANUFACTURER:

NO. REQ'D: 1

SOURCE OF QUOTE:

TYPE PUMP: PLUNGER ☐ DIAPHRAGM ☒ DIRECT ACTING ☐ POWER FRAME ☐

METERING HEADS: SIMPLEX ☒ DUPLEX ☐ TRIPLEX ☐ HEAD GANG ☐

* USE SEPARATE DATA SHEET FOR EACH LIQUID END

MATERIALS

LIQUID END: C.S.
PLUNGER:
CROSS HEAD:
CONN.ROD:
CRANK:
GEAR (DRIVER):
GEAR (DRIVEN):
GEAR HOUSING:
FRAME:
VALVES:
VALVE SEATS:
VALVE BODY:
PACKING: MAX. TEMP. °F:
GASKETS:
DIAPHRAGM: TEFLON MAX. TEMP. °F:
LAND:
LANTERN RING:
VALVE CAPS:

CONNECTIONS

	SIZE	TYPE	RATING
SUCTION			
DISCHARGE			
DRAINS			
FLUSHING			

AIR OR GAS PURGING YES ☐ NO ☐
VALVES REPLACEABLE YES ☐ NO ☐

LIQUID END

LIQUID END BODY: TYPE (PLUNGER) (DIAPHRAGM) (REMOTE) (SUBMERGED)
PLUNGER DIAM: STROKE:
STROKES/MIN/CYLINDER:
S.W.P. W/QUOTED DRIVER SWP W/MAX. DRIVER

VALVES	SUCTION	DISCHARGE
TYPE		
NUMBER		
AREA IN.²		

PLUNGER SUPPORT: (PACKING) (CROSS HEAD)
PACKING SIZE: TYPE:
SPECIAL SEALS:

LUBRICATION

PACING: DRIVER BRGS.:
CONN. ROD BRGS.:
CROSS HEAD: GEARING:
POWER CYLINDER:
HYDRAULIC FLUID (DIAPHRAGM PLUNGER PUMP):

STROKE ADJUSTMENT

MANUAL ☐ AUTO ☐ WHILE RUNNING ☐ OR STOPPED ☐
REMOTE ☐ LOCAL ☐
SIGNAL: PNEUMATIC ☐ ELECTRIC ☐ HYDRAULIC ☐

AUXILIARY FEATURES

JACKETED ☐ STROKE COUNTER ☐
TIMER & MULTIPORT VALVE ☐ SPARE PACKING ☐

DRIVE

ELECTRIC ☒ GAS ☐ AIR ☐ BHP
MAKE: CONSTANT SPEED ☒ VAR. SPEED ☐
RPM: PHASE: FRAME NO.:
ENCLOSURE: FRAME NO.:
FULL LOAD CURRENT: LOCKED ROTOR CURRENT:
POWER CYLINDER: DIAM.: STROKE:
GAS PRESS. SUPPLY: EXHAUST:
GAS CONSUMPTION: SCFM @ MAX. SPEED

SPEED CONTROL ELECT. ☒ PNEUMATIC ☐ MANUAL ☐
AUTOMATIC ☐ NONE ☐
SPEED REDUCER: MFR. INTEG. ☐ SEPARATE ☐
MODEL: RATIO: CLASS.:
COUPLING: MAKE: TYPE:
GUARDS: COUPLING ☐ CRANK ☐
SPEED INDIC. YES ☐ NO ☐ REMOTE ☐ LOCAL ☐

SERVICE CONDITIONS

LIQUID END NO.: 1 LIQ.: 1%-5% NaOH ☐ (ACID) ☒ (BASIC)
PUMPING TEMP.: 90 °F. VAPOR PRESS. @ P.T.: 0.26
VISCOSITY: 0.9 C.P. SPECIFIC GRAVITY: 1.06
CORROSION OR EROSION FACTORS:
CAPACITY GPH: MAX. 20 MIN. 2.0 NORM. 10.0
SUCT. PRESS. PSIG: MAX. 1.29 MIN. -0.09 NORM. 0.69
DISCH. PRESS. PSIG: MAX. 60 MIN. ATM NORM. 50
NPSH AVAILABLE: 28.14' REQ'D.:
BHP @ RATING: 1/2 HP
BASE PLATE: CARBON STEEL
TEST: HYD. ☒ PERF. ☒ WITNESSED ☐ NOT WITNESSED ☒

REMARKS:

UNITED ENGINEERS & CONSTRUCTORS
A Raytheon Company
Western Operations

EQUIPMENT DATA SHEET

☒ CDR ☐ TITLE I ☐ TITLE II ☐ TITLE III

ITEM NUMBER	PAGE
P-12-105	1 OF 1

CUSTOMER & LOCATION	PROJECT	UE&C JOB NO.	DATE:
DOE-RL/WHC HANFORD, WA	WRAP FACILITY MODULE 2A	6237.006	04/17/92
		ACCOUNT NO.	BY: TPS

REVISIONS (DATE & BY)	A		B		C		D	
	E		F		G		H	

SERVICE	MANUFACTURER	NO. REQ'D	SOURCE OF QUOTE
CHEMICAL SCRUBBER FEED PUMP		1	

TYPE PUMP: PLUNGER ☐ DIAPHRAGM ☒ DIRECT ACTING ☐ POWER FRAME ☐
METERING HEADS: SIMPLEX ☒ DUPLEX ☐ TRIPLEX ☐ HEAD GANG ☐
* USE SEPARATE DATA SHEET FOR EACH LIQUID END

MATERIALS

LIQUID END: C.S.
PLUNGER:
CROSS HEAD:
CONN.ROD:
CRANK:
GEAR (DRIVER):
GEAR (DRIVEN):
GEAR HOUSING:
FRAME:
VALVES:
VALVE SEATS:
VALVE BODY:
PACKING: MAX. TEMP. °F:
GASKETS:
DIAPHRAGM: TEFLON MAX. TEMP. °F:
LAND:
LANTERN RING:
VALVE CAPS:

CONNECTIONS

	SIZE	TYPE	RATING
SUCTION			
DISCHARGE			
DRAINS			
FLUSHING			

AIR OR GAS PURGING YES ☐ NO ☐
VALVES REPLACEABLE YES ☐ NO ☐

LIQUID END

LIQUID END BODY: TYPE (PLUNGER) (DIAPHRAGM) (REMOTE) (SUBMERGED)
PLUNGER DIAM: STROKE:
STROKES/MIN/CYLINDER:
S.W.P. W/QUOTED DRIVER SWP W/MAX. DRIVER

VALVES	SUCTION	DISCHARGE
TYPE		
NUMBER		
AREA IN.²		

PLUNGER SUPPORT: (PACKING) (CROSS HEAD)
PACKING SIZE: TYPE:
SPECIAL SEALS:

LUBRICATION

PACING: DRIVER BRGS.:
CONN. ROD BRGS.:
CROSS HEAD: GEARING:
POWER CYLINDER:
HYDRAULIC FLUID (DIAPHRAGM PLUNGER PUMP):

STROKE ADJUSTMENT

MANUAL ☐ AUTO ☐ WHILE RUNNING ☐ OR STOPPED ☐
REMOTE ☐ LOCAL ☐
SIGNAL: PNEUMATIC ☐ ELECTRIC ☐ HYDRAULIC ☐

AUXILIARY FEATURES

JACKETED ☐ STROKE COUNTER ☐
TIMER & MULTIPORT VALVE ☐ SPARE PACKING ☐

DRIVE

ELECTRIC ☐ GAS ☐ AIR ☐ BHP
MAKE: CONSTANT SPEED ☐ VAR. SPEED ☐
RPM: PHASE: FRAME NO.:
ENCLOSURE: FRAME NO.:
FULL LOAD CURRENT: LOCKED ROTOR CURRENT:
POWER CYLINDER: DIAM.: STROKE:
GAS PRESS. SUPPLY: EXHAUST:
GAS CONSUMPTION: SCFM @ MAX. SPEED

SPEED CONTROL ELECT. ☐ PNEUMATIC ☐ MANUAL ☐
AUTOMATIC ☐ NONE ☐
SPEED REDUCER: MFR. INTEG. ☐ SEPARATE ☐
MODEL: RATIO: CLASS.:
COUPLING: MAKE: TYPE:
GUARDS: COUPLING ☐ CRANK ☐
SPEED INDIC. YES ☐ NO ☐ REMOTE ☐ LOCAL ☐

SERVICE CONDITIONS

LIQUID END NO.: 1 LIQ.: 1%-5% NaOH ☐ (ACID) ☒ (BASIC)
PUMPING TEMP.: 60 °F. VAPOR PRESS. @ P.T.: 0.26
VISCOSITY: 0.9 C.P. SPECIFIC GRAVITY: 1.06
CORROSION OR EROSION FACTORS:
CAPACITY GPH: MAX. 20 MIN. 2.0 NORM. 10.0
SUCT. PRESS. PSIG: MAX. 1.29 MIN. -0.09 NORM. 0.69
DISCH. PRESS. PSIG: MAX. 60 MIN. ATM NORM. 50
NPSH AVAILABLE: 28.14' REQ'D.:
BHP @ RATING: 1/2 HP
BASE PLATE: CARBON STEEL
TEST: HYD. ☒ PERF. ☒ WITNESSED ☐ NOT WITNESSED ☒

REMARKS:

9413227.0736

UNITED ENGINEERS & CONSTRUCTORS A Raytheon Company Western Operations	EQUIPMENT DATA SHEET ☒ CDR ☐ TITLE I ☐ TITLE II ☐ TITLE III	ITEM NUMBER P-12-106	PAGE 1 OF 1

CUSTOMER & LOCATION	PROJECT	UE&C JOB NO. 6237.006	DATE: 05/20/92
DOE-RL/WHC HANFORD, WA	WRAP FACILITY MODULE 2A	ACCOUNT NO.	BY: TPS

REVISIONS (DATE & BY)	A		B		C		D	
	E		F		G		H	

SERVICE	MANUFACTURER	NO. REQ'D.	SOURCE OF QUOTE
DECON SOLUTION DRUM PUMP		1	

CONDITIONS OF SERVICE		DIMENSIONS	
APPLICATION:		A:	F:
UNIT LOAD DESCRIPTION:		B:	G:
LIQUID: TBD	SUCTION LIFT: 5'	C:	H:
PT °F: 60	DIFF HEAD FT: 15'	D:	I:
SP GR AT RATED PT:	GPM: 15	E:	J:
VAP PRESS AT RATED PT:			
VISCOSITY AT PT, CP:			
CONSTRUCTION			
BUNG CONNECTION: 2"			
WETTED PARTS; STAINLESS STEEL			
ENCLOSURE:			
HP: 1/3			
ELECTRICAL (VOLT/PHASE/HZ): 120/1/60			
WEIGHT: 16 LBS			

9413227.0737

UNITED ENGINEERS & CONSTRUCTORS
A Raytheon Company
Western Operations

EQUIPMENT DATA SHEET

☒ CDR ☐ TITLE I ☐ TITLE II ☐ TITLE III

ITEM NUMBER: P-12-107

PAGE: 1 OF 1

CUSTOMER & LOCATION: DOE-RL/WHC HANFORD, WA

PROJECT: WRAP FACILITY MODULE 2A

UE&C JOB NO.: 6237.006

DATE: 04/17/92

ACCOUNT NO.:

BY: TPS

REVISIONS (DATE & BY): A ___ B ___ C ___ D ___ E ___ F ___ G ___ H ___

SERVICE: DECON SOLUTION METERING PUMP

MANUFACTURER:

NO. REQ'D: 1

SOURCE OF QUOTE:

TYPE PUMP: PLUNGER ☐ DIAPHRAGM ☒ DIRECT ACTING ☐ POWER FRAME ☐

METERING HEADS: SIMPLEX ☒ DUPLEX ☐ TRIPLEX ☐ HEAD GANG ☐

* USE SEPARATE DATA SHEET FOR EACH LIQUID END

MATERIALS

LIQUID END: S.S.
PLUNGER:
CROSS HEAD:
CONN.ROD:
CRANK:
GEAR (DRIVER):
GEAR (DRIVEN):
GEAR HOUSING:
FRAME:
VALVES:
VALVE SEATS:
VALVE BODY:
PACKING: MAX. TEMP. °F:
GASKETS:
DIAPHRAGM: TEFLON MAX. TEMP. °F:
LAND:
LANTERN RING:
VALVE CAPS:

CONNECTIONS

	SIZE	TYPE	RATING
SUCTION			
DISCHARGE			
DRAINS			
FLUSHING			

AIR OR GAS PURGING YES ☐ NO ☐
VALVES REPLACEABLE YES ☐ NO ☐

LIQUID END

LIQUID END BODY: TYPE (PLUNGER) (DIAPHRAGM) (REMOTE) (SUBMERGED)
PLUNGER DIAM.: STROKE:
STROKES/MIN/CYLINDER:
S.W.P. W/QUOTED DRIVER SWP W/MAX. DRIVER

VALVES	SUCTION	DISCHARGE
TYPE		
NUMBER		
AREA IN.²		

PLUNGER SUPPORT: (PACKING) (CROSS HEAD)
PACKING SIZE: TYPE:
SPECIAL SEALS:

LUBRICATION

PACING: DRIVER BRGS.:
CONN. ROD BRGS.:
CROSS HEAD: GEARING:
POWER CYLINDER:
HYDRAULIC FLUID (DIAPHRAGM PLUNGER PUMP):

STROKE ADJUSTMENT

MANUAL ☐ AUTO ☐ WHILE RUNNING ☐ OR STOPPED ☐
REMOTE ☐ LOCAL ☐
SIGNAL: PNEUMATIC ☐ ELECTRIC ☐ HYDRAULIC ☐

AUXILIARY FEATURES

JACKETED ☐ STROKE COUNTER ☐
TIMER & MULTIPORT VALVE ☐ SPARE PACKING ☐

DRIVE

ELECTRIC ☒ GAS ☐ AIR ☐ BHP
MAKE: CONSTANT SPEED ☐ VAR. SPEED ☐
RPM: PHASE: FRAME NO.:
ENCLOSURE: FRAME NO.:
FULL LOAD CURRENT: LOCKED ROTOR CURRENT:
POWER CYLINDER: DIAM.: STROKE:
GAS PRESS. SUPPLY: EXHAUST:
GAS CONSUMPTION: SCFM @ MAX. SPEED

SPEED CONTROL ELECT. ☒ PNEUMATIC ☐ MANUAL ☐
AUTOMATIC ☐ NONE ☐
SPEED REDUCER: MFR. INTEG. ☐ SEPARATE ☐
MODEL: RATIO: CLASS.:
COUPLING: MAKE: TYPE:
GUARDS: COUPLING ☐ CRANK ☐
SPEED INDIC. YES ☐ NO ☐ REMOTE ☐ LOCAL ☐

SERVICE CONDITIONS

LIQUID END NO.: 1 LIQ.: TBD ☐ (ACID) ☐ (BASIC)
PUMPING TEMP.: 60 °F. VAPOR PRESS. @ P.T.:
VISCOSITY: C.P. SPECIFIC GRAVITY:
CORROSION OR EROSION FACTORS:
CAPACITY GPH: MAX. 36 MIN. 3.6 NORM. 18
SUCT. PRESS. PSIG: MAX. 1.49 MIN. -.24 NORM. 0.63
DISCH. PRESS. PSIG: MAX. 200 MIN. 40 NORM. 150
NPSH AVAILABLE: 29.5' REQ'D.:
BHP @ RATING: 1/2 HP
BASE PLATE: CARBON STEEL
TEST: HYD. ☒ PERF. ☒ WITNESSED ☐ NOT WITNESSED ☒

REMARKS:

9413227.0738

UNITED ENGINEERS & CONSTRUCTORS A Raytheon Company Western Operations	EQUIPMENT DATA SHEET ☒ CDR ☐ TITLE I ☐ TITLE II ☐ TITLE III	ITEM NUMBER P-12-501A,B	PAGE 1 OF 1

CUSTOMER & LOCATION	PROJECT	UE&C JOB NO. 6237.006	DATE: 04/29/92
DOE-RL/WHC HANFORD, WA	WRAP FACILITY MODULE 2A	ACCOUNT NO.	BY: KDV

REVISIONS (DATE & BY)	A		B		C		D	
	E		F		G		H	

SERVICE ACTIVE CHILLED WATER PUMPS	MANUFACTURER	SOURCE OF QUOTE

NO. PUMPS REQ'D: 2	SIZE & TYPE:		NO. OF STAGES: 1	
NO. MOTORS REQ'D: 2	ITEM NO.: SAME	PROVIDED BY: VENDOR	MTD BY: VENDOR	REF. PAGE:
NO. TURBINES REQ'D:	ITEM NO.:	PROVIDED BY:	MTD BY:	REF. PAGE:

CONDITIONS OF SERVICE, EACH PUMP

LIQUID: 45% PROPYLENE GLYCOL, 55% WATER BY WEIGHT			
GPM AT PT. NOR.: 5	RATED:	DISCH. PRESS: 35 PSIG	
PT °F RATED (NOTE 1):	MAX. 57°F	SUCT. PRESS. PSIG: 0 MAX.	0 RATED
SP GR. AT RATED PT.: 1.04	DIFF. PRES. PSI: 35		
VAP. PRESS. AT RATED P. PSIA: 0.2	DIFF. HEAD. FT: 78		
VIS. AT RATED: ☐ PT. ☒ CP: 10 CP	NPSHA. FT: 3 FT		
CORR/EROS. CAUSED BY: FLUID	CORR ALLOW.:		
COLD START TEMP °F:	SP GR:	& VIS:	

PERFORMANCE (NOTE 2)

PROPOSAL CURVE NO.:	
RPM:	NPSHR (WATER) (H.C.)
EFF.:	BHP RATED:
MAX. BHP RATED IMP: .1	
MAX. HEAD RATED IMP: 30 FT	
MIN. CONTINUOUS GPM:	
ROTATION (VIEWED FROM CPLG END):	
COLD START GHP:	

CONSTRUCTION

NOZZLES	SIZE	RATING	FACINGS	LOCATION
SUCTION				
DISCHARGE				

CASE-MOUNT	☐ CENTERLINE	☐ FOOT	☐ BRACKET	☐ VERT (TYPE)
CASE-SPLIT	☐ AXIAL	☐ RADIAL	TYPE SUCTION	☐ SGL ☐ DBL
CASE-PRESSURE	MAX. ALLOW: PSIG CF	HYDRO TEST: PSIG		
CASE-CONNECT	☐ VENT	☐ DRAIN	☐ GAGE	
IMPELLER DIA.	RATED:	MAX.:	MIN.:	TYPE:
IMPELLER MOUNT	☐ BETWEEN BRGS	☐ OVERHUNG		
BEARING-TYPE	RADIAL:	THRUST:		
LUBRICATION	☐ RING OIL ☐ FLOOD ☐ OIL MIST ☐ FLINGER ☐ PRESSURE ☐ GREASE			
COUPLING	MFR	MODEL	☐ GUARD	
DRIVER HALF MTD BY	☐ PUMP MFR.	☐ DRIVER MFR.	☐ PURCHASER	
PACKING	MFR. & TYPE:		SIZE/NO OF RINGS:	
MECH SEAL	MFR. & MODEL:		API CLASS. CODE:	
	MFR. CODE:			

SHOP TESTS

☒ NON-WIT. PERF. ☐ WIT. PERF.
☒ NON-WIT. HYDRO ☐ WIT. HYDRO
☐ NPSH REQ'D. ☐ WIT. NPSH
☐ SHOP INSPECTION
☐ DISMANT. & INSP. AFTER TEST
☐ OTHER

MATERIALS

PUMP: CASE/TRIM CLASS:
CARBON STEEL

BASEPLATE: CARBON STEEL

VERTICAL PUMPS

PIT OR SLUMP DEPTH:
MIN. SUBMERGENCE REQ'D:

COLUMN	☐	☐ THREADED
LINE SHAFT	☐ OPEN	☐ ENCLOSED
BRGS	BOWL	LINE SHAFT

BRG. LUBE ☐ PUMP FLUID ☐ OIL ☐ GREASE
☐ STRAINER

AUXILIARIES

C.W. PIPE PLAN API 610	☐CU ☐ SS ☐ CS ☐ TUBING ☐ PIPE BY			
TOTAL COOLING WATER	OF	PSIG	MAX A T	☐ SIGHT F 1 REQ'D
PACKING COOLING INJECTION REQ'D	TOTAL GPM		PSIG	
SEAL FLUSH PLAN API 610	☐ CS ☐ SS ☐ TUBING ☐ PIPE BY			
EXTERNAL SEAL FLUSH FLUID			GPM	PSIG
AUXILIARY SEAL PLAN API 610	☐ CS ☐ SS ☐ TUBING ☐ PIPE BY			
AUX SEAL QUENCH FLUID:				

MOTOR DRIVER

HP: 0.25	RPM:	FRAME:	VOLTS/PHASE/HZ:
MFR:	TYPE: SQUIRREL GAGE INDUCTION		NEMA DESIGN
ENCLOSURE:	RATED AMBIENT TEMP 40° C		INSUL. CLASS
ELEVATION: FT	FULL LOAD AMPS	SPACE HEATERS	

PUMP THRUST: LB UP DOWN
LENGTH BELOW MOUNTING FLANGE:

APPROXIMATE WEIGHTS	PUMP & BASE	MOTOR:	GEAR:	TURBINE:

CODE REQUIREMENTS & SPECS:

REMARKS:
1. SYSTEM OPERATING TEMPERATURE TO BE 42°F TO 57°F NORMAL PUMP SUCTION AT 57°F
2. HYDRAULIC HP = 0.23 HP (100% EFF)

UNITED ENGINEERS & CONSTRUCTORS A Raytheon Company Western Operations	EQUIPMENT DATA SHEET ☒ CDR ☐ TITLE I ☐ TITLE II ☐ TITLE III	ITEM NUMBER P-12-502A,B	PAGE 1 OF 1
CUSTOMER & LOCATION: DOE-RL/WHC HANFORD, WA	PROJECT: WRAP FACILITY MODULE 2A	UE&C JOB NO. 6237.006 / ACCOUNT NO.	DATE: 04/29/92 / BY: KDV

REVISIONS (DATE & BY)	A		B		C		D	
	E		F		G		H	

SERVICE	MANUFACTURER	SOURCE OF QUOTE
NONACTIVE CHILLED WATER PUMPS		

NO. PUMPS REQ'D: 2	SIZE & TYPE:		NO. OF STAGES: 1	
NO. MOTORS REQ'D: 2	ITEM NO.: SAME	PROVIDED BY: VENDOR	MTD BY: VENDOR	REF. PAGE:
NO. TURBINES REQ'D:	ITEM NO.:	PROVIDED BY:	MTD BY:	REF. PAGE:

CONDITIONS OF SERVICE, EACH PUMP

LIQUID: 45% PROPYLENE GLYCOL, 55% WATER BY WEIGHT			
GPM AT PT. NOR.: 5	RATED:	DISCH. PRESS: 35 PSIG	
PT °F RATED (NOTE 1):	MAX. 57°F	SUCT. PRESS. PSIG: 0 MAX.	0 RATED
SP GR. AT RATED PT.: 1.04	DIFF. PRES. PSI: 35		
VAP. PRESS. AT RATED P. PSIA: 0.2	DIFF. HEAD. FT: 78		
VIS. AT RATED: ☐ PT. ☒ CP: 10 CP	NPSHA. FT: 3 FT		
CORR/EROS. CAUSED BY: FLUID	CORR ALLOW.:		
COLD START TEMP °F:	SP GR:	& VIS:	

PERFORMANCE (NOTE 2)

PROPOSAL CURVE NO.:	
RPM:	NPSHR (WATER) (H.C.)
EFF.:	BHP RATED:
MAX. BHP RATED IMP: .1	
MAX. HEAD RATED IMP: 30 FT	
MIN. CONTINUOUS GPM:	
ROTATION (VIEWED FROM CPLG END):	
COLD START GHP:	

CONSTRUCTION

NOZZLES	SIZE	RATING	FACINGS	LOCATION
SUCTION				
DISCHARGE				

CASE-MOUNT	☐ CENTERLINE	☐ FOOT	☐ BRACKET	☐ VERT (TYPE)
CASE-SPLIT	☐ AXIAL	☐ RADIAL	TYPE SUCTION	☐ SGL ☐ DBL
CASE-PRESSURE	MAX. ALLOW: PSIG CF	HYDRO TEST: - PSIG		
CASE-CONNECT	☐ VENT	☐ DRAIN	☐ GAGE	
IMPELLER DIA.	RATED:	MAX.:	MIN.:	TYPE:
IMPELLER MOUNT	☐ BETWEEN BRGS	☐ OVERHUNG		
BEARING-TYPE	RADIAL:	THRUST:		
LUBRICATION	☐ RING OIL ☐ FLOOD ☐ OIL MIST ☐ FLINGER ☐ PRESSURE ☐ GREASE			
COUPLING	MFR	MODEL	☐ GUARD	
DRIVER HALF MTD BY	☐ PUMP MFR.	☐ DRIVER MFR.	☐ PURCHASER	
PACKING	MFR. & TYPE:		SIZE/NO OF RINGS:	
MECH SEAL	MFR. & MODEL:		API CLASS. CODE:	
	MFR. CODE:			

SHOP TESTS

☒ NON-WIT. PERF. ☐ WIT. PERF.
☒ NON-WIT. HYDRO ☐ WIT. HYDRO
☐ NPSH REQ'D. ☐ WIT. NPSH
☐ SHOP INSPECTION
☐ DISMANT. & INSP. AFTER TEST
☐ OTHER

MATERIALS

PUMP: CASE/TRIM CLASS:
CARBON STEEL

BASEPLATE: CARBON STEEL

VERTICAL PUMPS

PIT OR SLUMP DEPTH:
MIN. SUBMERGENCE REQ'D:

COLUMN	☐	☐ THREADED
LINE SHAFT	☐ OPEN	☐ ENCLOSED
BRGS	BOWL	LINE SHAFT
BRG. LUBE	☐ PUMP FLUID	☐ OIL ☐ GREASE
☐ STRAINER		

AUXILIARIES

C.W. PIPE PLAN API 610	☐ CU ☐ SS ☐ CS ☐ TUBING ☐ PIPE BY			
TOTAL COOLING WATER	OF	PSIG	MAX A T	☐ SIGHT F 1 REQ'D
PACKING COOLING INJECTION REQ'D	TOTAL GPM		PSIG	
SEAL FLUSH PLAN API 610	☐ CS ☐ SS ☐ TUBING ☐ PIPE BY			
EXTERNAL SEAL FLUSH FLUID	GPM	PSIG		
AUXILIARY SEAL PLAN API 610	☐ CS ☐ SS ☐ TUBING ☐ PIPE BY			
AUX SEAL QUENCH FLUID:				

MOTOR DRIVER

HP: 0.25	RPM:	FRAME:	VOLTS/PHASE/HZ:
MFR:	TYPE: SQUIRREL GAGE INDUCTION	NEMA DESIGN	
ENCLOSURE:	RATED AMBIENT TEMP 40° C	INSUL. CLASS	
ELEVATION: FT	FULL LOAD AMPS	SPACE HEATERS	

PUMP THRUST: LB UP DOWN
LENGTH BELOW MOUNTING FLANGE:

APPROXIMATE WEIGHTS	PUMP & BASE	MOTOR:	GEAR:	TURBINE:

CODE REQUIREMENTS & SPECS:

REMARKS:
1. SYSTEM OPERATING TEMPERATURE TO BE 42°F TO 57°F NORMAL PUMP SUCTION AT 57°F
2. HYDRAULIC HP = 0.23 HP (100% EFF)

9413227.0740

UNITED ENGINEERS & CONSTRUCTORS A Raytheon Company Western Operations	EQUIPMENT DATA SHEET ☒ CDR ☐ TITLE I ☐ TITLE II ☐ TITLE III	ITEM NUMBER P-05-308	PAGE 1 OF 1

CUSTOMER & LOCATION	PROJECT	UE&C JOB NO. 6237.006	DATE: 06/20/92
DOE-RL/WHC HANFORD, WA	WRAP FACILITY MODULE 2A	ACCOUNT NO.	BY: RLH

REVISIONS (DATE & BY)	A		B		C		D	
	E		F		G		H	

SERVICE	MANUFACTURER	NO. REQ'D.	SOURCE OF QUOTE
CATALYST DRUM PUMP		1	

CONDITIONS OF SERVICE		DIMENSIONS	
APPLICATION:		A:	F:
UNIT LOAD DESCRIPTION:		B:	G:
LIQUID: 35 WT % HYDROGEN PEROXIDE	SUCTION LIFT: 10'	C:	H:
PT °F: 60 (110 MAX)	DIFF HEAD FT: 20'	D:	I:
SP GR AT RATED PT: 1.13	GPM: 10	E:	J:
VAP PRESS AT RATED PT:			
VISCOSITY AT PT, CP: 1.11			
CONSTRUCTION			
BUNG CONNECTION:			
WETTED PARTS; STAINLESS STEEL			
ENCLOSURE:			
HP: 1/3			
ELECTRICAL (VOLT/PHASE/HZ):			
WEIGHT:			

UNITED ENGINEERS & CONSTRUCTORS A Raytheon Company Western Operations	EQUIPMENT DATA SHEET ☒ CDR ☐ TITLE I ☐ TITLE II ☐ TITLE III	ITEM NUMBER P-05-309	PAGE 1 OF 1

CUSTOMER & LOCATION	PROJECT	UE&C JOB NO. 6237.006	DATE: 05/20/92
DOE-RL/WHC HANFORD, WA	WRAP FACILITY MODULE 2A	ACCOUNT NO.	BY: RLH

REVISIONS (DATE & BY)	A		B		C		D	
	E		F		G		H	

SERVICE	MANUFACTURER	NO. REQ'D.	SOURCE OF QUOTE
PROMOTER DRUM PUMP		1	

CONDITIONS OF SERVICE		DIMENSIONS	
APPLICATION:		A:	F:
UNIT LOAD DESCRIPTION:		B:	G:
LIQUID: COBALT NAPHTHENATE	SUCTION LIFT: 10'	C:	H:
PT °F: 60 (110 MAX)	DIFF HEAD FT: 20'	D:	I:
SP GR AT RATED PT: 0.94	GPM: 10	E:	J:
VAP PRESS AT RATED PT:			
VISCOSITY AT PT, CP:			
CONSTRUCTION			
BUNG CONNECTION:			
WETTED PARTS; STAINLESS STEEL			
ENCLOSURE:			
HP: 1/3			
ELECTRICAL (VOLT/PHASE/HZ):			
WEIGHT:			

9413227.0742

UNITED ENGINEERS & CONSTRUCTORS A Raytheon Company Western Operations	EQUIPMENT DATA SHEET ☒ CDR ☐ TITLE I ☐ TITLE II ☐ TITLE III	ITEM NUMBER P-05-310	PAGE 1 OF 1

CUSTOMER & LOCATION	PROJECT	UE&C JOB NO. 6237.006	DATE: 05/20/92
DOE-RL/WHC HANFORD, WA	WRAP FACILITY MODULE 2A	ACCOUNT NO.	BY: RLH

REVISIONS (DATE & BY)	A		B		C		D	
	E		F		G		H	

SERVICE	MANUFACTURER	NO. REQ'D.	SOURCE OF QUOTE
SOLVENT DRUM PUMP		1	

CONDITIONS OF SERVICE		DIMENSIONS	
APPLICATION:		A:	F:
UNIT LOAD DESCRIPTION:		B:	G:
LIQUID: METHYLENE CHLORIDE	SUCTION LIFT: 10'	C:	H:
PT °F: 60 (110 MAX)	DIFF HEAD FT: 20'	D:	I:
SP GR AT RATED PT: 1.325	GPM: 10	E:	J:
VAP PRESS AT RATED PT: 380 MM HG			
VISCOSITY AT PT, CP:			
CONSTRUCTION			
BUNG CONNECTION:			
WETTED PARTS; STAINLESS STEEL			
ENCLOSURE:			
HP: 1/3			
ELECTRICAL (VOLT/PHASE/HZ):			
WEIGHT:			

9413227.0743

UNITED ENGINEERS & CONSTRUCTORS A Raytheon Company Western Operations	EQUIPMENT DATA SHEET ☒ CDR ☐ TITLE I ☐ TITLE II ☐ TITLE III	ITEM NUMBER P-05-311	PAGE 1 OF 1

CUSTOMER & LOCATION	PROJECT	UE&C JOB NO. 6237.006	DATE: 06/20/92
DOE-RL/WHC HANFORD, WA	WRAP FACILITY MODULE 2A	ACCOUNT NO.	BY: RLH

REVISIONS (DATE & BY)	A		B		C		D	
	E		F		G		H	

SERVICE	MANUFACTURER	NO. REQ'D.	SOURCE OF QUOTE
EXTENDER DRUM PUMP		1	

CONDITIONS OF SERVICE		DIMENSIONS	
APPLICATION:		A:	F:
UNIT LOAD DESCRIPTION:		B:	G:
LIQUID: STYRENE	SUCTION LIFT: 10'	C:	H:
PT °F: 60 (110 MAX)	DIFF HEAD FT: 20'	D:	I:
SP GR AT RATED PT: 0.91	GPM: 10	E:	J:
VAP PRESS AT RATED PT:			
VISCOSITY AT PT, CP: 0.8			
CONSTRUCTION			
BUNG CONNECTION:			
WETTED PARTS; STAINLESS STEEL			
ENCLOSURE:			
HP: 1/3			
ELECTRICAL (VOLT/PHASE/HZ):			
WEIGHT:			

UNITED ENGINEERS & CONSTRUCTORS A Raytheon Company Western Operations	EQUIPMENT DATA SHEET ☒ CDR ☐ TITLE I ☐ TITLE II ☐ TITLE III	ITEM NUMBER P-06-302	PAGE 1 OF 1

CUSTOMER & LOCATION	PROJECT	UE&C JOB NO. 6237.006	DATE: 05/15/92
DOE-RL/WHC HANFORD, WA	WRAP FACILITY MODULE 2A	ACCOUNT NO.	BY: RLH

REVISIONS (DATE & BY)	A		B		C		D	
	E		F		G		H	

SERVICE	MANUFACTURER	SOURCE OF QUOTE
HUMIDIFIER CONDENSATE PUMP		

NO. PUMPS REQ'D:	SIZE & TYPE:		NO. OF STAGES:	
NO. MOTORS REQ'D:	ITEM NO.:	PROVIDED BY:	MTD BY:	REF. PAGE:
NO. TURBINES REQ'D:	ITEM NO.:	PROVIDED BY:	MTD BY:	REF. PAGE:

CONDITIONS OF SERVICE, EACH PUMP					PERFORMANCE	
LIQUID: HUMIDIFIER CONDENSATE					PROPOSAL CURVE NO.:	
GPM AT PT. NOR.:		RATED: 6	DISCH. PRESS: 20 PSIG		RPM:	NPSHR (WATER) (H.C.)
PT °F RATED: 60	MAX.	SUCT. PRESS. PSIG:	MAX.	RATED	EFF.:	BHP RATED: 0.08
SP GR. AT RATED PT.: 1.0		DIFF. PRES. PSI: 20			MAX. BHP RATED IMP:	
VAP. PRESS. AT RATED P. PSIA: 0.18		DIFF. HEAD. FT: 46.1			MAX. HEAD RATED IMP: 30 FT	
VIS. AT RATED: ☐ PT. ☒ CP: 1.3		NPSHA. FT:			MIN. CONTINUOUS GPM:	
CORR/EROS. CAUSED BY:		CORR ALLOW.:			ROTATION (VIEWED FROM CPLG END):	
COLD START TEMP °F:		SP GR:		& VIS:	COLD START GHP:	

CONSTRUCTION					SHOP TESTS
NOZZLES	SIZE	RATING	FACINGS	LOCATION	☐ NON-WIT. PERF. ☐ WIT. PERF.
SUCTION					☒ NON-WIT. HYDRO ☐ WIT. HYDRO
DISCHARGE					☐ NPSH REQ'D. ☐ WIT. NPSH
CASE-MOUNT	☐ CENTERLINE ☐ FOOT ☐ BRACKET ☐ VERT (TYPE)				☐ SHOP INSPECTION
CASE-SPLIT	☐ AXIAL ☐ RADIAL TYPE SUCTION ☐ SGL ☐ DBL				☐ DISMANT. & INSP. AFTER TEST
CASE-PRESSURE	MAX. ALLOW: PSIG CF		HYDRO TEST: PSIG		☐ OTHER
CASE-CONNECT	☐ VENT	☐ DRAIN		☐ GAGE	
IMPELLER DIA.	RATED:	MAX.:	MIN.:	TYPE:	MATERIALS
IMPELLER MOUNT	☐ BETWEEN BRGS		☐ OVERHUNG		PUMP: CASE/TRIM CLASS: SS 316
BEARING-TYPE	RADIAL:		THRUST:		
LUBRICATION	☐ RING OIL ☐ FLOOD ☐ OIL MIST ☐ FLINGER ☐ PRESSURE ☐ GREASE				
COUPLING	MFR	MODEL	☐ GUARD		
DRIVER HALF MTD BY	☐ PUMP MFR.	☐ DRIVER MFR.	☐ PURCHASER		
PACKING	MFR. & TYPE:		SIZE/NO OF RINGS:		
MECH SEAL	MFR. & MODEL:		API CLASS. CODE:		BASEPLATE:
	MFR. CODE:				VERTICAL PUMPS

AUXILIARIES					VERTICAL PUMPS		
					PIT OR SLUMP DEPTH:		
C.W. PIPE PLAN API 610	☐CU ☐ SS ☐ CS ☐ TUBING ☐ PIPE BY				MIN. SUBMERGENCE REQ'D:		
TOTAL COOLING WATER	OF	PSIG	MAX A T	☐ SIGHT F 1 REQ'D	COLUMN	☐	☐ THREADED
PACKING COOLING INJECTION REQ'D		TOTAL GPM		PSIG	LINE SHAFT	☐ OPEN	☐ ENCLOSED
SEAL FLUSH PLAN API 610	☐ CS ☐ SS ☐ TUBING ☐ PIPE BY				BRGS	BOWL	LINE SHAFT
EXTERNAL SEAL FLUSH FLUID			GPM	PSIG	BRG. LUBE	☐ PUMP FLUID	☐ OIL ☐ GREASE
AUXILIARY SEAL PLAN API 610	☐ CS ☐ SS ☐ TUBING ☐ PIPE BY				☐ STRAINER		
AUX SEAL QUENCH FLUID:							

MOTOR DRIVER					
HP: 0.20	RPM: 3,450	FRAME: 120/1/60	VOLTS/PHASE/HZ:		
MFR:	TYPE: SQUIRREL GAGE INDUCTION		NEMA DESIGN	PUMP THRUST: LB	UP DOWN
ENCLOSURE:	RATED AMBIENT TEMP 40° C		INSUL. CLASS	LENGTH BELOW MOUNTING FLANGE:	
ELEVATION: FT	FULL LOAD AMPS		SPACE HEATERS		
APPROXIMATE WEIGHTS	PUMP & BASE: 80 LBS TOTAL	MOTOR:		GEAR:	TURBINE:

CODE REQUIREMENTS & SPECS:

REMARKS:

UNITED ENGINEERS & CONSTRUCTORS A Raytheon Company Western Operations	EQUIPMENT DATA SHEET ☒ CDR ☐ TITLE I ☐ TITLE II ☐ TITLE III	ITEM NUMBER P-14-101A,B	PAGE 1 OF 1

CUSTOMER & LOCATION	PROJECT	UE&C JOB NO. 6237.006	DATE: 06/08/92
DOE-RL/WHC HANFORD, WA	WRAP FACILITY MODULE 2A	ACCOUNT NO.	BY: MP

REVISIONS (DATE & BY)	A		B		C		D	
	E		F		G		H	

SERVICE SECONDARY CHILLED WATER PUMP	MANUFACTURER	SOURCE OF QUOTE

NO. PUMPS REQ'D: 2	SIZE & TYPE:		NO. OF STAGES: 1	
NO. MOTORS REQ'D: 2	ITEM NO.:	PROVIDED BY:	MTD BY:	REF. PAGE:
NO. TURBINES REQ'D:	ITEM NO.:	PROVIDED BY:	MTD BY:	REF. PAGE:

CONDITIONS OF SERVICE, EACH PUMP

LIQUID: 45% GLYCOL - 55% WATER BY WEIGHT				
GPM AT PT. NOR.: 1,200	RATED:	DISCH. PRESS: PSIG		
PT °F RATED:	MAX.	SUCT. PRESS. PSIG: MAX.	RATED	
SP GR. AT RATED PT.:		DIFF. PRES. PSI:		
VAP. PRESS. AT RATED P. PSIA:		DIFF. HEAD. FT: 80 FT		
VIS. AT RATED: ☐ PT. ☐ CP:		NPSHA. FT:		
CORR/EROS. CAUSED BY:		CORR ALLOW.:		
COLD START TEMP °F:		SP GR:	& VIS:	

PERFORMANCE

PROPOSAL CURVE NO.:	
RPM:	NPSHR (WATER) (H.C.)
EFF.:	BHP RATED:
MAX. BHP RATED IMP:	
MAX. HEAD RATED IMP: 80 FT	
MIN. CONTINUOUS GPM: 1,200	
ROTATION (VIEWED FROM CPLG END):	
COLD START GHP:	

CONSTRUCTION

NOZZLES	SIZE	RATING	FACINGS	LOCATION
SUCTION				
DISCHARGE				

CASE-MOUNT	☐ CENTERLINE	☐ FOOT	☐ BRACKET	☐ VERT (TYPE)
CASE-SPLIT	☐ AXIAL	☐ RADIAL	TYPE SUCTION	☐ SGL ☐ DBL
CASE-PRESSURE	MAX. ALLOW: PSIG CF	HYDRO TEST: PSIG		
CASE-CONNECT	☐ VENT	☐ DRAIN	☐ GAGE	
IMPELLER DIA.	RATED:	MAX.:	MIN.:	TYPE:
IMPELLER MOUNT	☐ BETWEEN BRGS	☐ OVERHUNG		
BEARING-TYPE	RADIAL:	THRUST:		
LUBRICATION	☐ RING OIL ☐ FLOOD ☐ OIL MIST ☐ FLINGER ☐ PRESSURE ☐ GREASE			
COUPLING	MFR	MODEL	☐ GUARD	
DRIVER HALF MTD BY	☐ PUMP MFR.	☐ DRIVER MFR.	☐ PURCHASER	
PACKING	MFR. & TYPE:		SIZE/NO OF RINGS:	
MECH SEAL	MFR. & MODEL:		API CLASS. CODE:	
	MFR. CODE:			

SHOP TESTS

☐ NON-WIT. PERF. ☐ WIT. PERF.
☐ NON-WIT. HYDRO ☐ WIT. HYDRO
☐ NPSH REQ'D. ☐ WIT. NPSH
☐ SHOP INSPECTION
☐ DISMANT. & INSP. AFTER TEST
☐ OTHER

MATERIALS

PUMP: CASE/TRIM CLASS:
SHAFT - STAINLESS STEEL
IMPELLER - BRONZE

BASEPLATE:

VERTICAL PUMPS

PIT OR SLUMP DEPTH:
MIN. SUBMERGENCE REQ'D:

COLUMN	☐	☐ THREADED
LINE SHAFT	☐ OPEN	☐ ENCLOSED
BRGS	BOWL	LINE SHAFT
BRG. LUBE	☐ PUMP FLUID	☐ OIL ☐ GREASE
☐ STRAINER		

AUXILIARIES

C.W. PIPE PLAN API 610	☐CU ☐ SS ☐ CS ☐ TUBING ☐ PIPE BY			
TOTAL COOLING WATER	OF	PSIG	MAX A T	☐ SIGHT F 1 REQ'D
PACKING COOLING INJECTION REQ'D		TOTAL GPM		PSIG
SEAL FLUSH PLAN API 610	☐ CS ☐ SS ☐ TUBING ☐ PIPE BY			
EXTERNAL SEAL FLUSH FLUID			GPM	PSIG
AUXILIARY SEAL PLAN API 610	☐ CS ☐ SS ☐ TUBING ☐ PIPE BY			
AUX SEAL QUENCH FLUID:				

MOTOR DRIVER

HP: 50	RPM:	FRAME:	VOLTS/PHASE/HZ: 460/3/60	
MFR:	TYPE: SQUIRREL GAGE INDUCTION		NEMA DESIGN	
ENCLOSURE:	RATED AMBIENT TEMP 40° C		INSUL. CLASS	
ELEVATION: 710 FT	FULL LOAD AMPS		SPACE HEATERS	

PUMP THRUST: LB UP DOWN
LENGTH BELOW MOUNTING FLANGE:

APPROXIMATE WEIGHTS	PUMP & BASE	MOTOR:	GEAR:	TURBINE:

CODE REQUIREMENTS & SPECS:

REMARKS: ELECTRONIC SPEED CONTROL

9413227.0746

UNITED ENGINEERS & CONSTRUCTORS A Raytheon Company Western Operations	EQUIPMENT DATA SHEET ☒ CDR ☐ TITLE I ☐ TITLE II ☐ TITLE III	ITEM NUMBER P-14-102A,B	PAGE 1 OF 1

CUSTOMER & LOCATION	PROJECT	UE&C JOB NO. 6237.006	DATE: 06/08/92
DOE-RL/WHC HANFORD, WA	WRAP FACILITY MODULE 2A	ACCOUNT NO.	BY: MP

REVISIONS (DATE & BY)	A		B		C		D	
	E		F		G		H	

SERVICE	MANUFACTURER	SOURCE OF QUOTE
PRIMARY CHILLED WATER PUMP		

NO. PUMPS REQ'D: 2	SIZE & TYPE:		NO. OF STAGES: 1	
NO. MOTORS REQ'D: 2	ITEM NO.:	PROVIDED BY:	MTD BY:	REF. PAGE:
NO. TURBINES REQ'D:	ITEM NO.:	PROVIDED BY:	MTD BY:	REF. PAGE:

CONDITIONS OF SERVICE EACH PUMP					PERFORMANCE	
LIQUID: 45% GLYCOL - 55% WATER BY WEIGHT					PROPOSAL CURVE NO.:	
GPM AT PT. NOR.: 600		RATED:	DISCH. PRESS: PSIG		RPM:	NPSHR (WATER) (H.C.)
PT °F RATED:	MAX.	SUCT. PRESS. PSIG:	MAX.	RATED	EFF.:	BHP RATED:
SP GR. AT RATED PT.:		DIFF. PRES. PSI:			MAX. BHP RATED IMP:	
VAP. PRESS. AT RATED P. PSIA:		DIFF. HEAD. FT: 50 FT			MAX. HEAD RATED IMP: 50 FT	
VIS. AT RATED: ☐ PT. ☐ CP:		NPSHA. FT:			MIN. CONTINUOUS GPM: 600	
CORR/EROS. CAUSED BY:		CORR ALLOW.:			ROTATION (VIEWED FROM CPLG END):	
COLD START TEMP °F:		SP GR:		& VIS:	COLD START GHP:	

CONSTRUCTION					SHOP TESTS
NOZZLES	SIZE	RATING	FACINGS	LOCATION	☐ NON-WIT. PERF. ☐ WIT. PERF.
SUCTION					☐ NON-WIT. HYDRO ☐ WIT. HYDRO
DISCHARGE					☐ NPSH REQ'D. ☐ WIT. NPSH
CASE-MOUNT	☐ CENTERLINE	☐ FOOT	☐ BRACKET	☐ VERT (TYPE)	☐ SHOP INSPECTION
CASE-SPLIT	☐ AXIAL	☐ RADIAL	TYPE SUCTION	☐ SGL ☐ DBL	☐ DISMANT. & INSP. AFTER TEST
CASE-PRESSURE	MAX. ALLOW:	PSIG	CF	HYDRO TEST: PSIG	☐ OTHER
CASE-CONNECT	☐ VENT	☐ DRAIN		☐ GAGE	
IMPELLER DIA.	RATED:	MAX.:	MIN.:	TYPE:	MATERIALS
IMPELLER MOUNT	☐ BETWEEN BRGS		☐ OVERHUNG		PUMP: CASE/TRIM CLASS:
BEARING-TYPE	RADIAL:		THRUST:		SHAFT - STAINLESS STEEL
LUBRICATION	☐ RING OIL ☐ FLOOD ☐ OIL MIST ☐ FLINGER ☐ PRESSURE ☐ GREASE				IMPELLER - BRONZE
COUPLING	MFR	MODEL	☐ GUARD		
DRIVER HALF MTD BY	☐ PUMP MFR.	☐ DRIVER MFR.	☐ PURCHASER		
PACKING	MFR. & TYPE:		SIZE/NO OF RINGS:		
MECH SEAL	MFR. & MODEL:		API CLASS. CODE:		BASEPLATE:
	MFR. CODE:				VERTICAL PUMPS

AUXILIARIES					VERTICAL PUMPS		
					PIT OR SLUMP DEPTH:		
C.W. PIPE PLAN API 610	☐CU ☐ SS ☐ CS ☐ TUBING ☐ PIPE BY				MIN. SUBMERGENCE REQ'D:		
TOTAL COOLING WATER	OF	PSIG	MAX A T	☐ SIGHT F 1 REQ'D	COLUMN	☐	☐ THREADED
PACKING COOLING INJECTION REQ'D		TOTAL GPM		PSIG	LINE SHAFT	☐ OPEN	☐ ENCLOSED
SEAL FLUSH PLAN API 610	☐ CS ☐ SS ☐ TUBING ☐ PIPE BY				BRGS	BOWL	LINE SHAFT
EXTERNAL SEAL FLUSH FLUID			GPM	PSIG	BRG. LUBE	☐ PUMP FLUID	☐ OIL ☐ GREASE
AUXILIARY SEAL PLAN API 610	☐ CS ☐ SS ☐ TUBING ☐ PIPE BY				☐ STRAINER		
AUX SEAL QUENCH FLUID:							

MOTOR DRIVER						
HP: 15	RPM:	FRAME:	VOLTS/PHASE/HZ: 460/3/60			
MFR:	TYPE: SQUIRREL GAGE INDUCTION			NEMA DESIGN	PUMP THRUST: LB	UP DOWN
ENCLOSURE:	RATED AMBIENT TEMP 40° C			INSUL. CLASS	LENGTH BELOW MOUNTING FLANGE:	
ELEVATION: 710 FT	FULL LOAD AMPS		SPACE HEATERS			
APPROXIMATE WEIGHTS	PUMP & BASE		MOTOR:		GEAR:	TURBINE:

CODE REQUIREMENTS & SPECS:

REMARKS:

UNITED ENGINEERS & CONSTRUCTORS A Raytheon Company Western Operations	EQUIPMENT DATA SHEET ☒ CDR ☐ TITLE I ☐ TITLE II ☐ TITLE III	ITEM NUMBER P-14-103A,B	PAGE 1 OF 1

CUSTOMER & LOCATION	PROJECT	UE&C JOB NO. 6237.006	DATE: 06/08/92
DOE-RL/WHC HANFORD, WA	WRAP FACILITY MODULE 2A	ACCOUNT NO.	BY: MP

REVISIONS (DATE & BY)	A		B		C		D	
	E		F		G		H	

SERVICE	MANUFACTURER	SOURCE OF QUOTE
CONDENSER WATER PUMP		

NO. PUMPS REQ'D: 2	SIZE & TYPE:		NO. OF STAGES: 1	
NO. MOTORS REQ'D: 2	ITEM NO.:	PROVIDED BY:	MTD BY:	REF. PAGE:
NO. TURBINES REQ'D:	ITEM NO.:	PROVIDED BY:	MTD BY:	REF. PAGE:

CONDITIONS OF SERVICE, EACH PUMP					PERFORMANCE	
LIQUID: 45% GLYCOL - 55% WATER BY WEIGHT					PROPOSAL CURVE NO.:	
GPM AT PT. NOR.: 600		RATED:	DISCH. PRESS: PSIG		RPM:	NPSHR (WATER) (H.C.)
PT °F RATED:	MAX.	SUCT. PRESS. PSIG:	MAX.	RATED	EFF.:	BHP RATED:
SP GR. AT RATED PT.:		DIFF. PRES. PSI:			MAX. BHP RATED IMP:	
VAP. PRESS. AT RATED P. PSIA:		DIFF. HEAD. FT:			MAX. HEAD RATED IMP: 50 FT	
VIS. AT RATED: ☐ PT. ☐ CP:		NPSHA. FT:			MIN. CONTINUOUS GPM: 600	
CORR/EROS. CAUSED BY:		CORR ALLOW.:			ROTATION (VIEWED FROM CPLG END):	
COLD START TEMP °F:		SP GR:		& VIS:	COLD START GHP:	

CONSTRUCTION					SHOP TESTS
NOZZLES	SIZE	RATING	FACINGS	LOCATION	☐ NON-WIT. PERF. ☐ WIT. PERF.
SUCTION					☐ NON-WIT. HYDRO ☐ WIT. HYDRO
DISCHARGE					☐ NPSH REQ'D. ☐ WIT. NPSH
CASE-MOUNT	☐ CENTERLINE	☐ FOOT	☐ BRACKET	☐ VERT (TYPE)	☐ SHOP INSPECTION
CASE-SPLIT	☐ AXIAL	☐ RADIAL	TYPE SUCTION	☐ SGL ☐ DBL	☐ DISMANT. & INSP. AFTER TEST
CASE-PRESSURE	MAX. ALLOW: PSIG CF		HYDRO TEST: PSIG		☐ OTHER
CASE-CONNECT	☐ VENT	☐ DRAIN		☐ GAGE	
IMPELLER DIA.	RATED:	MAX.:	MIN.:	TYPE:	MATERIALS
IMPELLER MOUNT	☐ BETWEEN BRGS		☐ OVERHUNG		PUMP: CASE/TRIM CLASS:
BEARING-TYPE	RADIAL:		THRUST:		SHAFT - STAINLESS STEEL
LUBRICATION	☐ RING OIL ☐ FLOOD ☐ OIL MIST ☐ FLINGER ☐ PRESSURE ☐ GREASE				IMPELLER - BRONZE
COUPLING	MFR	MODEL	☐ GUARD		
DRIVER HALF MTD BY	☐ PUMP MFR.	☐ DRIVER MFR.	☐ PURCHASER		
PACKING	MFR. & TYPE:		SIZE/NO OF RINGS:		
MECH SEAL	MFR. & MODEL:		API CLASS. CODE:		BASEPLATE:
	MFR. CODE:				VERTICAL PUMPS

AUXILIARIES					VERTICAL PUMPS		
					PIT OR SLUMP DEPTH:		
C.W. PIPE PLAN API 610	☐CU ☐ SS ☐ CS ☐ TUBING ☐ PIPE BY				MIN. SUBMERGENCE REQ'D:		
TOTAL COOLING WATER	OF	PSIG	MAX A T	☐ SIGHT F 1 REQ'D	COLUMN	☐	☐ THREADED
PACKING COOLING INJECTION REQ'D		TOTAL GPM		PSIG	LINE SHAFT	☐ OPEN	☐ ENCLOSED
SEAL FLUSH PLAN API 610	☐ CS ☐ SS ☐ TUBING ☐ PIPE BY				BRGS	BOWL	LINE SHAFT
EXTERNAL SEAL FLUSH FLUID			GPM	PSIG	BRG. LUBE	☐ PUMP FLUID	☐ OIL ☐ GREASE
AUXILIARY SEAL PLAN API 610	☐ CS ☐ SS ☐ TUBING ☐ PIPE BY				☐ STRAINER		
AUX SEAL QUENCH FLUID:							

MOTOR DRIVER						
HP: 30	RPM:	FRAME:	VOLTS/PHASE/HZ: 460/3/60			
MFR:	TYPE: SQUIRREL GAGE INDUCTION			NEMA DESIGN	PUMP THRUST: LB UP DOWN	
ENCLOSURE:	RATED AMBIENT TEMP 40° C			INSUL. CLASS	LENGTH BELOW MOUNTING FLANGE:	
ELEVATION: 710 FT	FULL LOAD AMPS		SPACE HEATERS			
APPROXIMATE WEIGHTS	PUMP & BASE		MOTOR:		GEAR:	TURBINE:

CODE REQUIREMENTS & SPECS:

REMARKS:

9413227.0748

UNITED ENGINEERS & CONSTRUCTORS
A Raytheon Company
Western Operations

EQUIPMENT DATA SHEET

☒ CDR ☐ TITLE I ☐ TITLE II ☐ TITLE III

ITEM NUMBER: P-14-104

PAGE: 1 OF 1

CUSTOMER & LOCATION: DOE-RL/WHC HANFORD, WA

PROJECT: WRAP FACILITY MODULE 2A

UE&C JOB NO.: 6237.006

DATE: 06/08/92

ACCOUNT NO.:

BY: MP

REVISIONS (DATE & BY)								
	A		B		C		D	
	E		F		G		H	

SERVICE: HEAT RECOVERY

MANUFACTURER:

SOURCE OF QUOTE:

NO. PUMPS REQ'D: 2	SIZE & TYPE:		NO. OF STAGES: 1	
NO. MOTORS REQ'D: 2	ITEM NO.:	PROVIDED BY:	MTD BY:	REF. PAGE:
NO. TURBINES REQ'D:	ITEM NO.:	PROVIDED BY:	MTD BY:	REF. PAGE:

CONDITIONS OF SERVICE, EACH PUMP

LIQUID: 45% GLYCOL - 55% WATER BY WEIGHT

GPM AT PT. NOR.: 350 | RATED: | DISCH. PRESS: PSIG

PT °F RATED: | MAX. | SUCT. PRESS. PSIG: | MAX. | RATED

SP GR. AT RATED PT.: | DIFF. PRES. PSI:

VAP. PRESS. AT RATED P. PSIA: | DIFF. HEAD. FT: 70

VIS. AT RATED: ☐ PT. ☐ CP: | NPSHA. FT:

CORR/EROS. CAUSED BY: | CORR ALLOW.:

COLD START TEMP °F: | SP GR: | & VIS:

PERFORMANCE

PROPOSAL CURVE NO.:

RPM: | NPSHR (WATER) (H.C.)

EFF.: | BHP RATED:

MAX. BHP RATED IMP:

MAX. HEAD RATED IMP: 70 FT

MIN. CONTINUOUS GPM: 350

ROTATION (VIEWED FROM CPLG END):

COLD START GHP:

CONSTRUCTION

NOZZLES	SIZE	RATING	FACINGS	LOCATION
SUCTION				
DISCHARGE				

CASE-MOUNT: ☐ CENTERLINE ☐ FOOT ☐ BRACKET ☐ VERT (TYPE)

CASE-SPLIT: ☐ AXIAL ☐ RADIAL TYPE SUCTION ☐ SGL ☐ DBL

CASE-PRESSURE: MAX. ALLOW: PSIG CF | HYDRO TEST: PSIG

CASE-CONNECT: ☐ VENT ☐ DRAIN ☐ GAGE

IMPELLER DIA.: RATED: | MAX.: | MIN.: | TYPE:

IMPELLER MOUNT: ☐ BETWEEN BRGS ☐ OVERHUNG

BEARING-TYPE: RADIAL: | THRUST:

LUBRICATION: ☐ RING OIL ☐ FLOOD ☐ OIL MIST ☐ FLINGER ☐ PRESSURE ☐ GREASE

COUPLING: MFR | MODEL | ☐ GUARD

DRIVER HALF MTD BY: ☐ PUMP MFR. ☐ DRIVER MFR. ☐ PURCHASER

PACKING: MFR. & TYPE: | SIZE/NO OF RINGS:

MECH SEAL: MFR. & MODEL: | API CLASS. CODE:

MFR. CODE:

SHOP TESTS

☐ NON-WIT. PERF. ☐ WIT. PERF.
☐ NON-WIT. HYDRO ☐ WIT. HYDRO
☐ NPSH REQ'D. ☐ WIT. NPSH
☐ SHOP INSPECTION
☐ DISMANT. & INSP. AFTER TEST
☐ OTHER

MATERIALS

PUMP: CASE/TRIM CLASS:

SHAFT - STAINLESS STEEL

IMPELLER - BRONZE

BASEPLATE:

VERTICAL PUMPS

PIT OR SLUMP DEPTH:

MIN. SUBMERGENCE REQ'D:

COLUMN | ☐ | ☐ THREADED

LINE SHAFT | ☐ OPEN | ☐ ENCLOSED

BRGS | BOWL | LINE SHAFT

BRG. LUBE ☐ PUMP FLUID ☐ OIL ☐ GREASE

☐ STRAINER

AUXILIARIES

C.W. PIPE PLAN API 610 ☐ CU ☐ SS ☐ CS ☐ TUBING ☐ PIPE BY

TOTAL COOLING WATER | OF | PSIG | MAX A T | ☐ SIGHT F 1 REQ'D

PACKING COOLING INJECTION REQ'D | TOTAL GPM | PSIG

SEAL FLUSH PLAN API 610 ☐ CS ☐ SS ☐ TUBING ☐ PIPE BY

EXTERNAL SEAL FLUSH FLUID | GPM | PSIG

AUXILIARY SEAL PLAN API 610 ☐ CS ☐ SS ☐ TUBING ☐ PIPE BY

AUX SEAL QUENCH FLUID:

MOTOR DRIVER

HP: 15 | RPM: | FRAME: | VOLTS/PHASE/HZ: 460/3/60

MFR: | TYPE: SQUIRREL GAGE INDUCTION | NEMA DESIGN

ENCLOSURE: | RATED AMBIENT TEMP 40° C | INSUL. CLASS

ELEVATION: 710 FT | FULL LOAD AMPS | SPACE HEATERS

PUMP THRUST: LB UP DOWN

LENGTH BELOW MOUNTING FLANGE:

APPROXIMATE WEIGHTS | PUMP & BASE | MOTOR: | GEAR: | TURBINE:

CODE REQUIREMENTS & SPECS:

REMARKS:

SECTION 15175

THIS PAGE INTENTIONALLY
LEFT BLANK

94/3227.0750

THIS PAGE INTENTIONALLY
LEFT BLANK

WRAP MODULE 2A

SPECIFICATION SECTION
FOR
15175 TANKS

TABLE OF CONTENTS

PART 1 GENERAL

1.01 SECTION SCOPE
1.02 RELATED SECTIONS
1.03 REFERENCES
1.04 SYSTEM DESCRIPTION
1.05 SUBMITTALS
1.06 DELIVERY, STORAGE AND HANDLING
1.07 SITE CONDITIONS

PART 2 PRODUCTS

2.01 MANUFACTURERS
2.02 MATERIALS
2.03 EQUIPMENT
2.04 COMPONENTS
2.05 FABRICATION
2.06 SHOP QUALITY CONTROL

PART 3 EXECUTION

3.01 PREPARATION
3.02 ERECTION, INSTALLATION AND APPLICATION
3.03 FIELD QUALITY CONTROL
3.04 ADJUSTING AND CLEANING
3.05 DEMONSTRATION
3.06 PROTECTION

APPENDIX

APPENDIX A DATA SHEETS

WRAP MODULE 2A

SECTION 15175

TANKS

PART 1 GENERAL

1.01 SECTION SCOPE

A. This specification establishes the requirements for detailed design, fabrication, installation, start-up and acceptance testing of tanks for WRAP Module 2A.

1.02 RELATED SECTIONS

1.03 REFERENCES

A. American Society of Mechanical Engineers (ASME)
ASME VIII
ASME III

B. American Petroleum Institute (API)
API 650

C. National Fire Protection Association (NFPA)
NFPA-30 Flammable and Combustible Liquids Code

1.04 SYSTEM DESCRIPTION

A. Tanks are required to handle liquids and solids associated with the WRAP2A processes. Supports, branches and other fittings specific to the tank duty will be provided and designed in accordance with the appropriate Codes and Standards.

B. Data Sheets

Equipment Tag Nos., WBS Area Location Numbers, and equipment data sheets for this description are provided in **Appendix A.**

END OF SECTION

9413227.0752

WRAP MODULE 2A

APPENDIX A

EQUIPMENT/INSTRUMENT DATA SHEETS

WBS LOCATION	EQUIPMENT TAG	SERVICE
1104	V-04-101A,B	Polymer Encapsulation Off-Gas Carbon Adsorber
1105	T-05-301A,B	Solvent Storage
1105	T-05-302	Extender Storage
1105	T-05-303	Catalyst Storage
1105	T-05-304	Promoter Storage
1105	T-05-305A,B	VES Resin Storage
1105	V-05-301A,B,C	Vault Exhaust Carbon Adsorber
1105	T-05-401	Polymer Mixing
1105	T-05-402	Hydrocarbon Waste
1105	V-05-401	Liquid Catch
1105	T-05-521A,B	Weigh Hopper
1105	T-05-522	Absorbent Discharge Hopper
1105	T-05-541	Weigh Hopper
1106	T-06-101A,B	Shredder Discharge Bin
1106	V-06-301	Chemical Scrubber
1106	T-06-301	Discharge Hopper
1107	T-07-101A,B	Nonactive Waste Collection Tanks
1107	T-07-201	Active Waste Collection Tank
1107	T-07-202	Treated Active Waste Tank

WRAP MODULE 2A

WBS LOCATION	EQUIPMENT TAG	SERVICE
1112	T-12-101	Acid Feed Tank
1112	T-12-104	Acid Feed Pot
1112	T-12-102	Caustic Feed Tank
1112	T-12-105	Caustic Feed Pot
1112	T-12-103	Decon Solution Feed Tank
1112	T-12-106	Decon Solution Feed Pot
1106	H-06-201	Mercury Evaporator
1106	X-06-301	Feed Hopper Vibratory Screen
1104	V-04-101A,B	Polymer Encapsulation Off-gas Carbon Adsorber

9413227.0754

NO. VESSELS REQ'D. (☐ HORIZ - ☒ VERT.) 2	CUSTOMER: DOE-RL/WHC
SHELL DIA. ☒ I.D. - ☐ O.D.: 5'-0"	PROJECT: WRAP FACILITY MODULE 2A
SHELL THICKNESS: 3/16"	LOCATION: HANFORD, WA
HEADS THICKNESS: ASME F&D 3/16"	☒ CDR ☐ TITLE I ☐ TITLE II ☐ TITLE III
SHELL & HEAD THICKNESS INCLUDE C.A: YES	
SHELL LENGTH (SEAM TO SEAM): 5'-0"	
SUPPORT: (4) LEGS - CARBON STEEL	
CODE: ASME VIII 1 DESIGN CONDITIONS:	

ITEM NO. T-05-301A,B

	OPER.	DESIGN	ALLOW.
PRESS. (PSIG)	0	ATMOS	
TEMP. (°F)	60	-10/150	

CORR. ALLOW. SHELL: 1/16 HEADS: 1/16

X-RAY: SPOT STRESS RELIEF: NO

WINDLOAD: SEISMIC ZONE UBC - 2B

MATERIALS

HEADS: STAINLESS STEEL

SHELL: STAINLESS STEEL

NOZZLES & FLANGES: STAINLESS STEEL

GASKETS:

NOZZLES &	NO.	SIZE-RATING-FACE
1. LIQUID DISCHARGE	1	2"
2. LIQUID INLET	1	1.5"
3. NITROGEN PURGE	1	1"
4. OFF-GAS OUTLET	1	2"
5.		
6.		
7		
8.		
9.		
10.		
11.		
12.		
13.		
14.		
15.		

INTERNALS & ACCESSORIES	FURNISHED BY VESSEL PAD.	OTHERS
FILTER ELEM.		
PACKING		
LADDERS & PLATFORMS		
INLET PIPING	X	

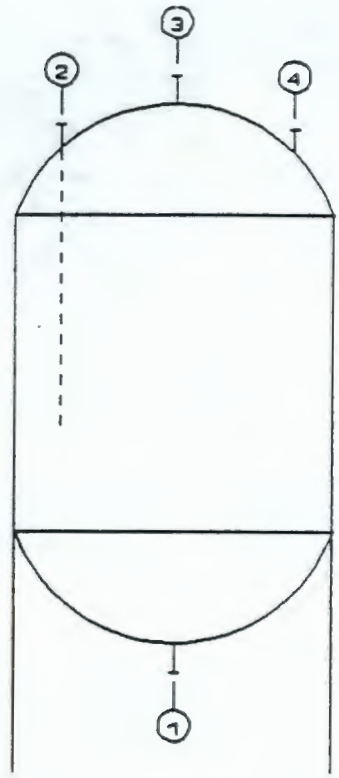

NOTES: 1. ALL COUPLING 6000#, UNLESS OTHERWISE
2. DESIGN AND FABRICATE ONLY - NO STAMP

NO.	DATE	BY	REVISIONS
A	7/21/92	RLH	ADDED DUPLICATE TANK

VESSEL: SOLVENT STORAGE TANK

FOR:

PLANT:

LOCATION:

ORDER NO.: 6237.006 ITEM NO.:

MFGR.:

DATE: 04/09/92 BY: RLH

UNITED ENGINEERS & CONSTRUCTORS
A Raytheon Company
Western Operations

9413227.0755

NO. VESSELS REQ'D. (☐ HORIZ - ☒ VERT.) 1	CUSTOMER: DOE-RL/WHC
SHELL DIA. ☒ I.D. - ☐ O.D.: 5'-0"	PROJECT: WRAP FACILITY MODULE 2A
SHELL THICKNESS: 1/4"	LOCATION: HANFORD, WA
HEADS THICKNESS: ASME F&D 1/4"	☒ CDR ☐ TITLE I ☐ TITLE II ☐ TITLE III
SHELL & HEAD THICKNESS INCLUDE C.A: YES	
SHELL LENGTH (SEAM TO SEAM): 5'-0"	
SUPPORT: (4) LEGS - CARBON STEEL	
CODE: ASME VIII 1 DESIGN CONDITIONS:	

ITEM NO. T-05-302

	OPER.	DESIGN	ALLOW.
PRESS. (PSIG)	0	ATMOS	
TEMP. (°F)	60	-10/150	

CORR. ALLOW. SHELL: 1/16 HEADS: 1/16

X-RAY: SPOT STRESS RELIEF: NO

WINDLOAD: SEISMIC ZONE UBC - 2B

MATERIALS

HEADS: CARBON STEEL W/EPOXY LINING

SHELL: CARBON STEEL W/EPOXY LINING

NOZZLES & FLANGES:

GASKETS:

NOZZLES &	NO.	SIZE-RATING-FACE
1. LIQUID DISCHARGE	1	1.5"
2. LIQUID INLET	1	1.5"
3. NITROGEN PURGE	1	1"
4. OFF-GAS OUTLET	1	2"
5. MANWAY	1	18" - 150# - RF
6.		
7		
8.		
9.		
10.		
11.		
12.		
13.		
14.		
15.		

INTERNALS & ACCESSORIES	FURNISHED BY VESSEL PAD.	OTHERS
FILTER ELEM.		
PACKING		
LADDERS & PLATFORMS		
INLET PIPING	X	

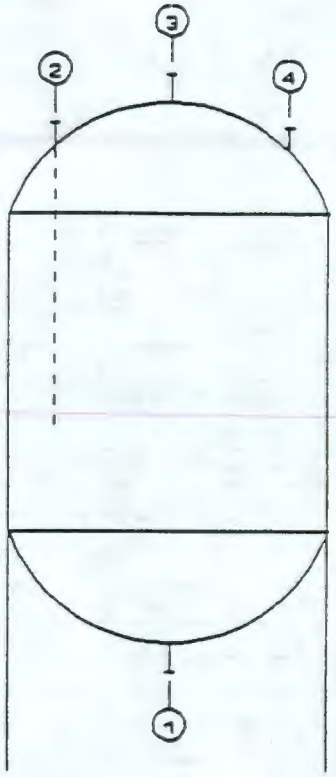

NOTES: 1. ALL COUPLING 6000#, UNLESS OTHERWISE
2. DESIGN AND FABRICATE ONLY - NO STAMP

NO.	DATE	BY	REVISIONS

VESSEL: EXTENDER STORAGE TANK

FOR:

PLANT:

LOCATION:

ORDER NO.: 6237.006 ITEM NO.:

MFGR.:

DATE: 04/09/92 BY: RLH

UNITED ENGINEERS & CONSTRUCTORS
A Raytheon Company
Western Operations

9413227.0756

NO. VESSELS REQ'D. (☐ HORIZ - ☒ VERT.) 1	CUSTOMER: DOE-RL/WHC
SHELL DIA. ☒ I.D. - ☐ O.D.: 3'-0"	PROJECT: WRAP FACILITY MODULE 2A
SHELL THICKNESS: 3/16"	LOCATION: HANFORD, WA
HEADS THICKNESS: ASME F&D 3/16"	☒ CDR ☐ TITLE I ☐ TITLE II ☐ TITLE III
SHELL & HEAD THICKNESS INCLUDE C.A: YES	
SHELL LENGTH (SEAM TO SEAM): 3'-0"	
SUPPORT: (3) LEGS - CARBON STEEL	
CODE: ASME VIII 1 DESIGN CONDITIONS:	

ITEM NO. T-05-303

NOTE 2	OPER.	DESIGN	ALLOW.
PRESS. (PSIG)	0	ATMOS	
TEMP. (°F)	600	-10/150	

CORR. ALLOW. SHELL: 1/16 HEADS: 1/16

X-RAY: SPOT STRESS RELIEF: NO

WINDLOAD: SEISMIC ZONE UBC - 2B

MATERIALS

HEADS: STAINLESS STEEL

SHELL: STAINLESS STEEL

NOZZLES & FLANGES: STAINLESS STEEL

GASKETS:

NOZZLES &	NO.	SIZE-RATING-FACE
1. LIQUID DISCHARGE	1	1.5"
2. LIQUID INLET	1	1"
3. NITROGEN PURGE	1	1"
4. OFF-GAS OUTLET	1	2"
5.		
6.		
7		
8.		
9.		
10.		
11.		
12.		
13.		
14.		
15.		

INTERNALS & ACCESSORIES	FURNISHED BY VESSEL PAD.	OTHERS
FILTER ELEM.		
PACKING		
LADDERS & PLATFORMS		
INLET PIPING	X	

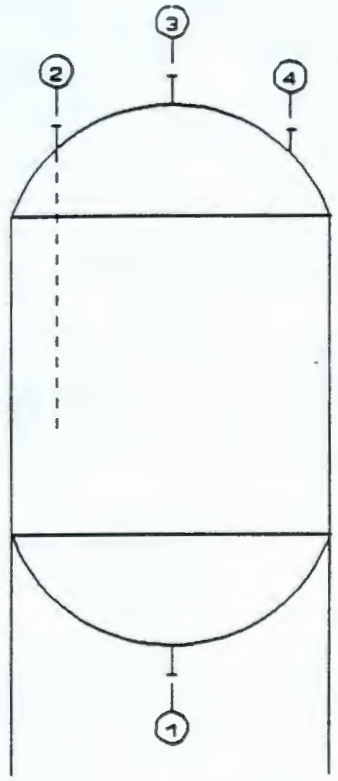

NOTES: 1. ALL COUPLING 6000#, UNLESS OTHERWISE
2. DESIGN AND FABRICATE ONLY - NO STAMP

NO.	DATE	BY	REVISIONS

VESSEL: CATALYST STORAGE TANK

FOR:

PLANT:

LOCATION:

ORDER NO.: 6237.006 ITEM NO.:

MFGR.:

DATE: 04/09/92 BY: RLH

UNITED ENGINEERS & CONSTRUCTORS
A Raytheon Company
Western Operations

9413227.0757

NO. VESSELS REQ'D. (☐ HORIZ - ☒ VERT.) 1	CUSTOMER: DOE-RL/WHC
SHELL DIA. ☒ I.D. - ☐ O.D.: 3'-0"	PROJECT: WRAP FACILITY MODULE 2A
SHELL THICKNESS: 3/16"	LOCATION: HANFORD, WA
HEADS THICKNESS: ASME F&D 3/16"	☒ CDR ☐ TITLE I ☐ TITLE II ☐ TITLE III
SHELL & HEAD THICKNESS INCLUDE C.A: YES	
SHELL LENGTH (SEAM TO SEAM): 3'-0"	
SUPPORT: (3) LEGS - CARBON STEEL	
CODE: ASME VIII 1 DESIGN CONDITIONS:	

ITEM NO. T-05-304

NOTE 2	OPER.	DESIGN	ALLOW.
PRESS. (PSIG)	0	ATMOS	
TEMP. (°F)	60	-10/150	

CORR. ALLOW. SHELL: 1/16 HEADS: 1/16

X-RAY: SPOT STRESS RELIEF: NO

WINDLOAD: SEISMIC ZONE UBC - 2B

MATERIALS

HEADS: STAINLESS STEEL

SHELL: STAINLESS STEEL

NOZZLES & FLANGES: STAINLESS STEEL

GASKETS:

NOZZLES &	NO.	SIZE-RATING-FACE
1. LIQUID DISCHARGE	1	1.5"
2. LIQUID INLET	1	1"
3. NITROGEN PURGE	1	1"
4. OFF-GAS OUTLET	1	2"
5.		
6.		
7		
8.		
9.		
10.		
11.		
12.		
13.		
14.		
15.		

INTERNALS & ACCESSORIES	FURNISHED BY VESSEL PAD.	OTHERS
FILTER ELEM.		
PACKING		
LADDERS & PLATFORMS		
INLET PIPING	X	

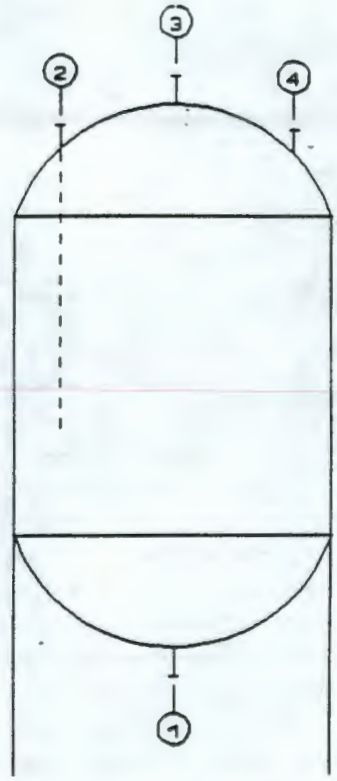

NOTES: 1. ALL COUPLING 6000#, UNLESS OTHERWISE
2. DESIGN AND FABRICATE ONLY - NO STAMP

NO.	DATE	BY	REVISIONS

VESSEL: PROMOTER STORAGE TANK

FOR:

PLANT:

LOCATION:

ORDER NO.: 6237.006 ITEM NO.:

MFGR.:

UNITED ENGINEERS & CONSTRUCTORS
A Raytheon Company
Western Operations

DATE: 04/09/92 BY: RLH

NO. VESSELS REQ'D. (VERT.): 2	CUSTOMER: DOE-RL/WHC
SHELL DIA. I.D.: 10'-0"	PROJECT: WRAP FACILITY MODULE 2A
SHELL THICKNESS: 1/4"	LOCATION: HANFORD, WA
HEADS THICKNESS S.E.: ASME F&D 1/4"	☒ CDR ☐ TITLE I ☐ TITLE II ☐ TITLE III
SHELL & HEAD THICKNESS INCLUDE C.A: YES	
SHELL LENGTH (SEAM TO SEAM): 10'-0"	
SUPPORT: SKIRT 3/8" THICK A36	
CODE: ASME-VIII-1 DESIGN CONDITIONS	

ITEM NO. T-05-305A,B

NOTE 2	OPER.	DESIGN	ALLOW.
PRESS. (PSIG)	0	ATMOS	
TEMP. (°F)	60	-10/150	

CORR. ALLOW. SHELL: 1/16 HEADS: 1/16

X-RAY: SPOT STRESS RELIEF: NO

WINDLOAD

SEISMIC ZONE UBC - 2B

MATERIALS

HEADS: A285 GR.C WITH EPOXY LINING

SHELL: A285 GR.C WITH EPOXY LINING

NOZZLES & FLANGES:

GASKETS:

NOZZLES &	NO.	SIZE-RATING-FACE
1. LIQUID DISCHG	1	4"
2. LIQUID INLET	1	3"
3. NITROGEN PURGE	1	1"
4. OFFGAS OUTLET	2	2"
5. MANWAY	1	18" - 150# - RF
6.		
7		
8.		
9.		
10.		
11.		
12.		
13.		
14.		
15.		

INTERNALS & ACCESSORIES	FURNISHED BY VESSEL PAD.	OTHERS
FILTER ELEM.		
PACKING		
INSUL. RINGS		
LADDERS & PLATFORMS		
INLET PIPING	X	

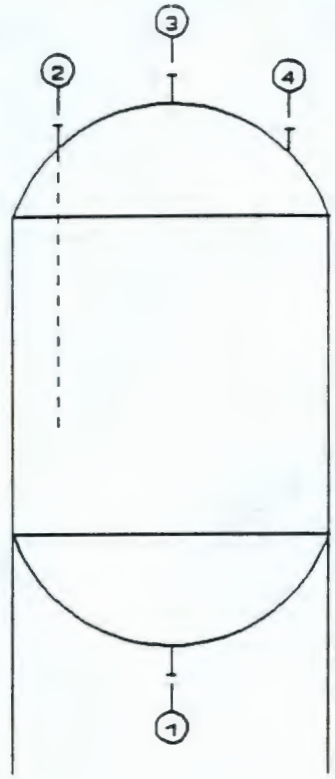

NOTES: 1. ALL COUPLING 6000#, UNLESS OTHERWISE

2. DESIGN AND FABRICATE ONLY - NO STAMP

NO.	DATE	BY	REVISIONS

VESSEL: VES RESIN STORAGE TANK

FOR:

PLANT:

LOCATION:

ORDER NO.: 6237.006 ITEM NO.:

MFGR.

UNITED ENGINEERS & CONSTRUCTORS
A Raytheon Company
Western Operations

DATE: 04/09/92 BY: RLH

REV. A: 04/17/92

9413227.0759

NO. VESSELS REQ'D. (☐ HORIZ - ☒ VERT.) 1	CUSTOMER: DOE-RL/WHC
SHELL DIA. ☒ I.D. - ☐ O.D.: 6'-0"	PROJECT: WRAP FACILITY MODULE 2A
SHELL THICKNESS: 3/16"	LOCATION: HANFORD, WA
HEADS THICKNESS: ASME F&D 3/16" CONE 3/16"	☒ CDR ☐ TITLE I ☐ TITLE II ☐ TITLE III
SHELL & HEAD THICKNESS INCLUDE C.A: YES	
SHELL LENGTH (SEAM TO SEAM): 5'-0"	
SUPPORT: 1/4" SKIRT - CARBON STEEL	
CODE: ASME-VIII-1 DESIGN CONDITIONS:	

ITEM NO. T-05-401

	OPER.	DESIGN	ALLOW.
PRESS. (PSIG)	0	ATMOS	
TEMP. (°F)	60	-10/150	

CORR. ALLOW. SHELL: 1/16" HEADS: 1/16"

X-RAY: SPOT STRESS RELIEF: NO

WINDLOAD: SEISMIC ZONE UBC - 2B

MATERIALS

HEADS: STAINLESS STEEL

SHELL: STAINLESS STEEL

NOZZLES & FLANGES: STAINLESS STEEL

GASKETS:

NOZZLES &	NO.	SIZE-RATING-FACE
1. LIQUID DISCHARGE	1	3"
2. RECYCLE INLET	1	2"
3. PROMOTER	1	1"
4. NITROGEN PURGE	1	1"
5. EXTENDER INLET	1	1"
6. VES RESIN INLET	1	3"
7. OFF-GAS OUTLET	1	2"
8. MANWAY	1	18" - 150# - RF
9.		
10.		
11.		
12.		
13.		
14.		
15.		

INTERNALS & ACCESSORIES	FURNISHED BY VESSEL PAD.	OTHERS
FILTER ELEM.		
PACKING		
LADDERS & PLATFORMS		
MIXING AGITATOR		X

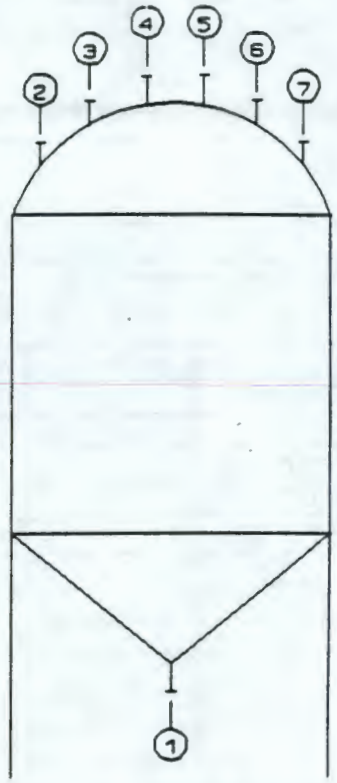

NOTES: 1. ALL COUPLING 6000#, UNLESS OTHERWISE

2. DESIGN AND FABRICATE ONLY - NO STAMP

NO.	DATE	BY	REVISIONS

VESSEL: POLYMER MIXING TANK

FOR:

PLANT:

LOCATION:

ORDER NO.: 6237.006 ITEM NO.:

MFGR.:

DATE: 04/09/92 BY: RLH

UNITED ENGINEERS & CONSTRUCTORS
A Raytheon Company
Western Operations

NO. VESSELS REQ'D. (☐ HORIZ - ☒ VERT.) 1	CUSTOMER: DOE-RL/WHC	ITEM NO. T-06-402
SHELL DIA. ☒ I.D. - ☐ O.D.: 6'-0"	PROJECT: WRAP FACILITY MODULE 2A	
SHELL THICKNESS: 3/16"	LOCATION: HANFORD, WA	
HEADS THICKNESS: ASME F&D 3/16"	☒ CDR ☐ TITLE I ☐ TITLE II ☐ TITLE III	
SHELL & HEAD THICKNESS INCLUDE C.A: YES		
SHELL LENGTH (SEAM TO SEAM): 5'-0"		
SUPPORT: (4) LEGS - CARBON STEEL		
CODE: ASME-VIII-1 DESIGN CONDITIONS:		

NOTE 2	OPER.	DESIGN	ALLOW.
PRESS. (PSIG)	0	ATMOS	
TEMP. (°F)	60	-10/150	

CORR. ALLOW. SHELL: 1/16 HEADS: 1/16

X-RAY: SPOT STRESS RELIEF: NO

WINDLOAD: SEISMIC ZONE UBC - 2B

MATERIALS

HEADS: STAINLESS STEEL

SHELL: STAINLESS STEEL

NOZZLES & FLANGES: STAINLESS STEEL

GASKETS:

NOZZLES &	NO.	SIZE-RATING-FACE
1. LIQUID DISCHARGE	1	2"
2. LIQUID INLET	1	1.5"
3. NITROGEN PURGE	1	1"
4. OFF-GAS OUTLET	1	2"
5. MANWAY	1	18" - 150# - RF
6.		
7.		
8.		
9.		
10.		
11.		
12.		
13.		
14.		
15.		

INTERNALS & ACCESSORIES	FURNISHED BY VESSEL PAD.	FURNISHED BY OTHERS
FILTER ELEM.		
PACKING		
INSUL. RINGS		
LADDERS & PLATFORMS		

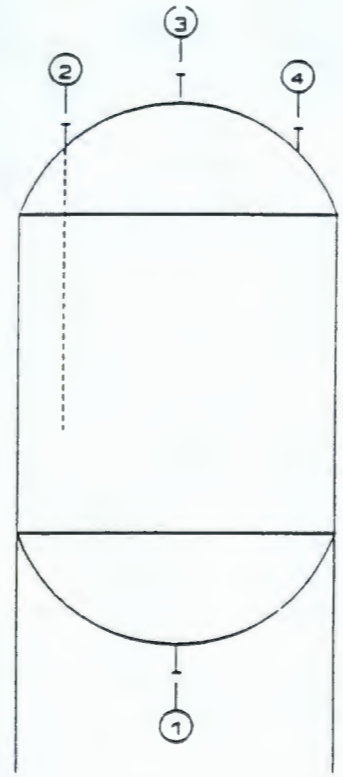

NOTES: 1. ALL COUPLING 6000#, UNLESS OTHERWISE
2. DESIGN AND FABRICATE ONLY - NO STAMP

NO.	DATE	BY	REVISIONS

VESSEL: HYDROCARBON WASTE TANK

FOR:

PLANT:

LOCATION:

ORDER NO.: 6237.006 ITEM NO.:

MFGR.:

UNITED ENGINEERS & CONSTRUCTORS
A Raytheon Company
Western Operations

DATE: 04/09/92 BY: RLH

9413227.0791

NO. VESSELS REQ'D. (☐ HORIZ - ☐ VERT.) 1	CUSTOMER: DOE-RL/WHC
SHELL DIA. ☒ I.D. - ☐ O.D.: 2'-0"	PROJECT: WRAP FACILITY MODULE 2A
SHELL THICKNESS: 1/4"	LOCATION: HANFORD, WA
HEADS THICKNESS: ASME F&D 1/4"	☒ CDR ☐ TITLE I ☐ TITLE II ☐ TITLE III
SHELL & HEAD THICKNESS INCLUDE C.A: YES	
SHELL LENGTH (SEAM TO SEAM): 3'-0"	
SUPPORT: (3) LEGS	
CODE: ASME-VIII-1 DESIGN CONDITIONS:	

ITEM NO. V-06-401

NOTE 2	OPER.	DESIGN	ALLOW.
PRESS. (PSIG)	-5		
TEMP. (°F)	60	150	

CORR. ALLOW. SHELL: 1/16 HEADS: 1/16

X-RAY: SPOT STRESS RELIEF: NO

WINDLOAD: SEISMIC ZONE UBC - 2B

MATERIALS

HEADS: STAINLESS STEEL

SHELL: STAINLESS STEEL

NOZZLES & FLANGES: C.S.

GASKETS:

NOZZLES &	NO.	SIZE-RATING-FACE
1. LIQUID DISCHARGE	1	1.5"
2. LIQUID INLET	1	1.5"
3. VACUUM CONN	1	2"
4.		
5.		
6.		
7		
8.		
9.		
10.		
11.		
12.		
13.		
14.		
15.		

INTERNALS & ACCESSORIES	FURNISHED BY VESSEL PAD.	OTHERS
FILTER ELEM.		
PACKING		
INSUL. RINGS		
LADDERS & PLATFORMS		

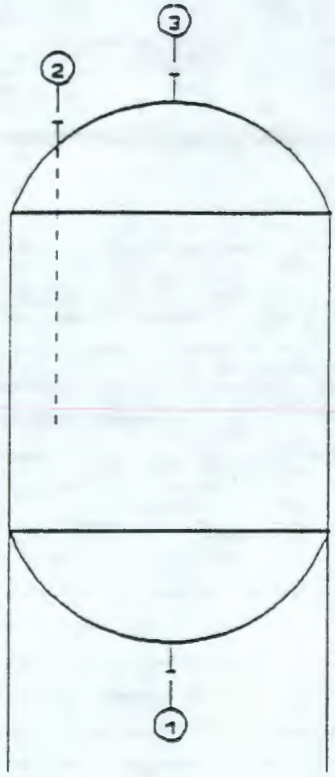

NOTES: 1. ALL COUPLING 6000#, UNLESS OTHERWISE
2. DESIGN AND FABRICATE ONLY - NO STAMP

NO.	DATE	BY	REVISIONS

VESSEL: LIQUID CATCH DRUM

FOR:

PLANT:

LOCATION:

ORDER NO.: 6237.006 ITEM NO.:

MFGR.:

DATE: 04/10/92 BY: RLH

UNITED ENGINEERS & CONSTRUCTORS
A Raytheon Company
Western Operations

9413227.0762

UNITED ENGINEERS & CONSTRUCTORS A Raytheon Company Western Operations	EQUIPMENT DATA SHEET ☒ CDR ☐ TITLE I ☐ TITLE II ☐ TITLE III	ITEM NUMBER T-05-521A,B	PAGE 1 OF 1

CUSTOMER & LOCATION	PROJECT	UE&C JOB NO. 6237.006	DATE: 04/13/92
DOE-RL/WHC HANFORD, WA	WRAP FACILITY MODULE 2A	ACCOUNT NO.	BY: SAS

REVISIONS (DATE & BY)	A		B		C		D	
	E		F		G		H	

SERVICE	MANUFACTURER	NO. REQ'D.	SOURCE OF QUOTE
WEIGH HOPPER		2	

WEIGH HOPPER

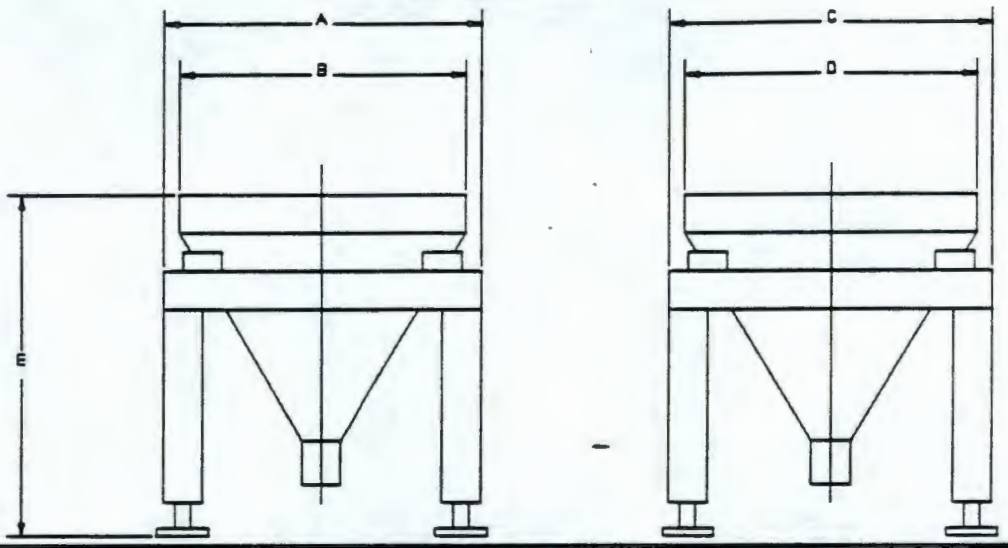

CONDITIONS OF SERVICE		DIMENSIONS	
APPLICATION: WEIGH OUT FIXED MASSES OF WASTE INTO NEW DRUMS		A: 36"	F:
UNIT LOAD DESCRIPTION: LLRMW FROM 55 AND 85 GALLON DRUMS		B:	G:
UNIT LOAD SIZE: 15 CU FT	DUTY: 8 HOURS/DAY	C:	H:
UNIT LOAD WEIGHT: 3,000 LBS		D:	I:
LOCATION: SHREDDER AND REPACK PROCESS ENCL		E:	J:
SOLIDS DENSITY: 30-450 LBS/CU FT			
SOLID SIZE: 2" X 2" X 2" MAX			
CYCLE TAG: 1 LOAD EVERY 5 MINS			
CONSTRUCTION			
MATERIAL: STAINLESS STEEL			
WEIGHT: 500 LBS			

9413227.0763

UNITED ENGINEERS & CONSTRUCTORS A Raytheon Company Western Operations	EQUIPMENT DATA SHEET ☒ CDR ☐ TITLE I ☐ TITLE II ☐ TITLE III	ITEM NUMBER T-05-522	PAGE 1 OF 1

CUSTOMER & LOCATION	PROJECT	UE&C JOB NO. 6237.006	DATE: 04/13/92
DOE-RL/WHC HANFORD, WA	WRAP FACILITY MODULE 2A	ACCOUNT NO.	BY: SAS

REVISIONS (DATE & BY)	A		B		C		D	
	E		F		G		H	

SERVICE	MANUFACTURER	NO. REQ'D.	SOURCE OF QUOTE
WEIGH HOPPER		1	

WEIGH HOPPER

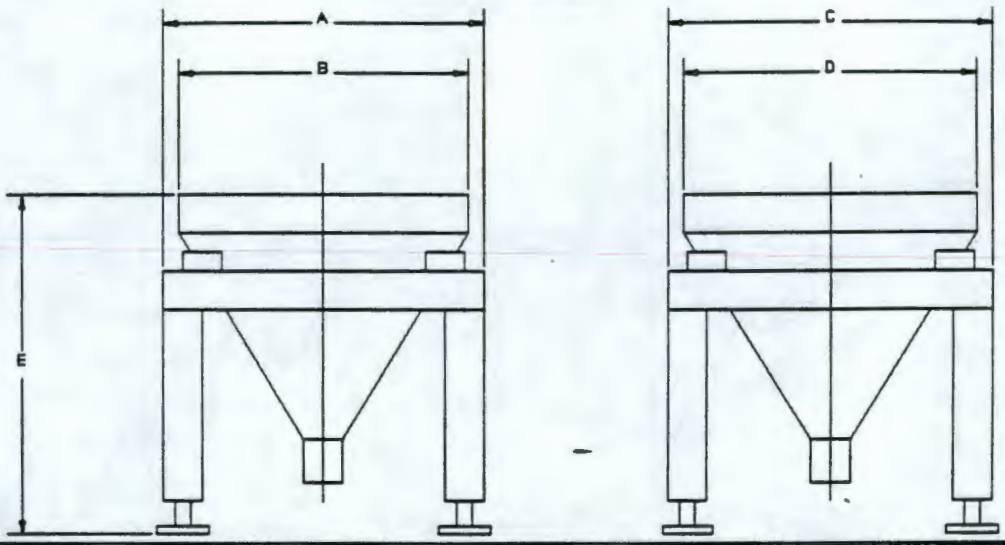

CONDITIONS OF SERVICE		DIMENSIONS	
APPLICATION: WEIGH OUT FIXED MASSES OF ABSORBENT INTO SHREDDER VIBRANCE TABLE		A:	F:
UNIT LOAD DESCRIPTION: ABSORBENT POWDER		B:	G:
UNIT LOAD SIZE: 15 CU FT	DUTY: 8 HOURS/DAY	C:	H:
UNIT LOAD WEIGHT: 1,300 LBS		D:	I:
LOCATION: SHREDDER AND REPACK PROCESS ENCL		E:	J:
CONSTRUCTION			
MATERIAL: STAINLESS STEEL			

UNITED ENGINEERS & CONSTRUCTORS A Raytheon Company Western Operations	EQUIPMENT DATA SHEET ☒ CDR ☐ TITLE I ☐ TITLE II ☐ TITLE III	ITEM NUMBER T-05-541	PAGE 1 OF 1

CUSTOMER & LOCATION	PROJECT	UE&C JOB NO. 6237.006	DATE: 04/13/92
DOE-RL/WHC HANFORD, WA	WRAP FACILITY MODULE 2A	ACCOUNT NO.	BY: SAS

REVISIONS (DATE & BY)	A		B		C		D	
	E		F		G		H	

SERVICE	MANUFACTURER	NO. REQ'D.	SOURCE OF QUOTE
WEIGH HOPPER		1	

WEIGH HOPPER

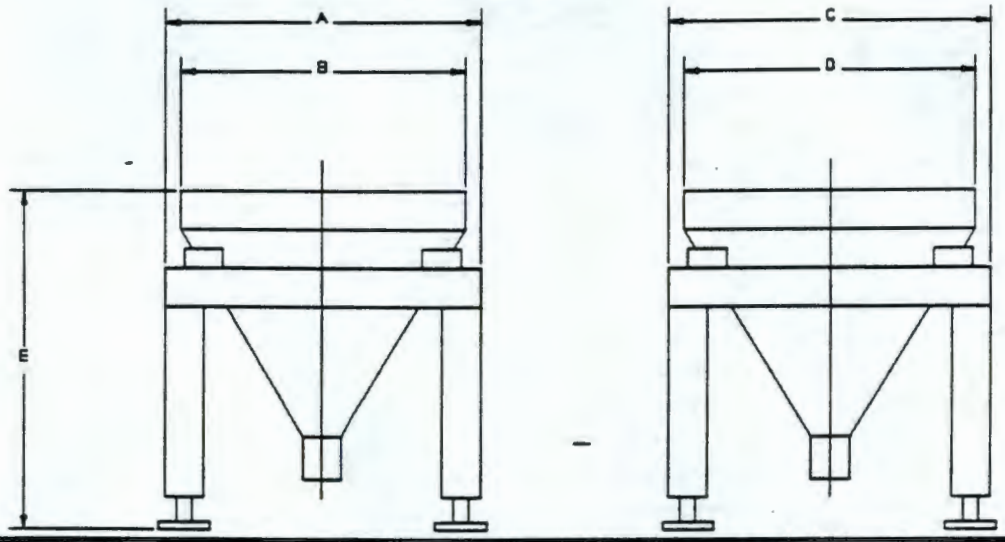

CONDITIONS OF SERVICE		DIMENSIONS	
APPLICATION: WEIGH OUT FIXED MASSES OF WASTE INTO NEW DRUMS		A:	F:
UNIT LOAD DESCRIPTION: LLRMW FROM 55 AND 85 GALLON DRUMS		B:	G:
UNIT LOAD SIZE: 15 CU FT	DUTY: 8 HOURS/DAY	C:	H:
UNIT LOAD WEIGHT: 3,000 LBS		D:	I:
LOCATION: PUG MILL ENCLOSURE		E:	J:
SOLIDS DENSITY: 60-90 LBS/CU FT			
CYCLE TIME: LOAD EVERY 5 MINUTES			
CYCLE TAG: 1 LOAD EVERY 5 MINS			
CONSTRUCTION			
MATERIAL: STAINLESS STEEL			
WEIGHT: 500 LBS			

9413227.0765

NO. VESSELS REQ'D. (☐ HORIZ - ☒ VERT.) 2	CUSTOMER: DOE-RL/WHC
SHELL DIA. ☒ I.D. - ☐ O.D.: 2'-6"	PROJECT: WRAP FACILITY MODULE 2A
SHELL THICKNESS:	LOCATION: HANFORD, WA
HEADS THICKNESS:	☒ CDR ☐ TITLE I ☐ TITLE II ☐ TITLE III
SHELL & HEAD THICKNESS INCLUDE C.A:	
SHELL LENGTH (SEAM TO SEAM): 2'-6"	
SUPPORT:	
CODE: DESIGN CONDITIONS:	

ITEM NO. T-06-101

	OPER.	DESIGN	ALLOW.
PRESS. (PSIG)	0		
TEMP. (°F)	60		

CORR. ALLOW. SHELL: HEADS:

X-RAY: STRESS RELIEF:

WINDLOAD:

MATERIALS

HEADS: CARBON STEEL

SHELL: CARBON STEEL

NOZZLES & FLANGES: CARBON STEEL

GASKETS:

NOZZLES &	NO.	SIZE-RATING-FACE
1. SOLIDS DISCHARGE	1	8" - 150 - RF
2.		
3.		
4.		
5.		
6.		
7		
8.		
9.		
10.		
11.		
12.		
13.		
14.		
15.		

INTERNALS & ACCESSORIES	FURNISHED BY VESSEL PAD.	FURNISHED BY OTHERS
FILTER ELEM.		
DISCHARGE VALVE	X	
SUPPORT FRAME	X	
LADDERS & PLATFORMS		

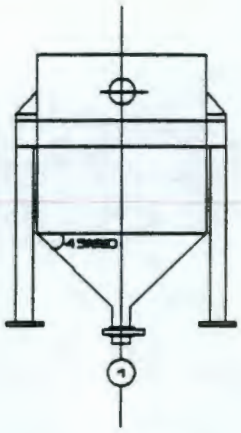

NOTES: 1. ALL COUPLING 6000#, UNLESS OTHERWISE

NO.	DATE	BY	REVISIONS

VESSEL: SHREDDER DISCHARGE BIN

FOR:

PLANT:

LOCATION:

ORDER NO.: 6237.006 ITEM NO.:

MFGR.:

DATE: 04/13/92 BY: RLH

UNITED ENGINEERS & CONSTRUCTORS
A Raytheon Company
Western Operations

NO. VESSELS REQ'D. (☐ HORIZ - ☒ VERT.) 1	CUSTOMER: DOE-RL/WHC
SHELL DIA. ☒ I.D. - ☐ O.D.: 6"	PROJECT: WRAP FACILITY MODULE 2A
SHELL THICKNESS:	LOCATION: HANFORD, WA
HEADS THICKNESS:	☒ CDR ☐ TITLE I ☐ TITLE II ☐ TITLE III
SHELL & HEAD THICKNESS INCLUDE C.A:	
SHELL LENGTH (SEAM TO SEAM): 30"	
SUPPORT:	
CODE: DESIGN CONDITIONS:	

ITEM NO. V-06-301

	OPER.	DESIGN	ALLOW.
PRESS. (W.C.)	-10"		
TEMP. (°F)	50	140	

CORR. ALLOW. SHELL: HEADS:

X-RAY: STRESS RELIEF:

WINDLOAD:

SEISMIC ZONE: SEISMIC ZONE 2B

MATERIALS

HEADS: POLYETHYLENE

SHELL: POLYETHYLENE

NOZZLES & FLANGES: POLYETHYLENE

PACKING: POLYETHYLENE

NOZZLES &	NO.	SIZE-RATING-FACE
1. GAS INLET	1	2" - 150 - RF
2. GAS OUTLET	1	2" - 150 - RF
3. LIQUID INLET	1	1.5" - 150 - RF
4. LIQUID OUTLET	1	1.5" - 150 - RF
5.		
6.		
7		
8.		
9.		
10.		
11.		
12.		
13.		
14.		
15.		

INTERNALS & ACCESSORIES	FURNISHED BY VESSEL PAD.	OTHERS
FILTER ELEM.		
PACKING	X	
INSUL. RINGS		
LADDERS & PLATFORMS		

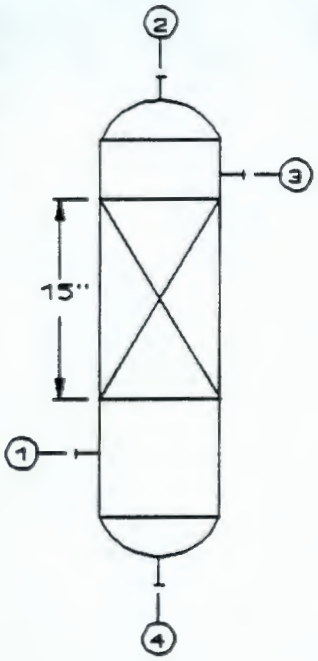

NOTES: 1. ALL COUPLING 6000#, UNLESS OTHERWISE

NO.	DATE	BY	REVISIONS

VESSEL: CHEMICAL SCRUBBER

FOR:

PLANT:

LOCATION:

ORDER NO.: 6237.006 ITEM NO.: V-06-301

MFGR.:

UNITED ENGINEERS & CONSTRUCTORS
A Raytheon Company
Western Operations

DATE: 04/10/92 BY: RLH

9413227.0767

UNITED ENGINEERS & CONSTRUCTORS A Raytheon Company Western Operations	EQUIPMENT DATA SHEET ☒ CDR ☐ TITLE I ☐ TITLE II ☐ TITLE III	ITEM NUMBER T-06-301	PAGE 1 OF 1

CUSTOMER & LOCATION	PROJECT	UE&C JOB NO. 6237.006	DATE: 06/18/92
DOE-RL/WHC HANFORD, WA	WRAP FACILITY MODULE 2A	ACCOUNT NO.	BY: GBD

REVISIONS (DATE & BY)	A		B		C		D	
	E		F		G		H	

SERVICE	MANUFACTURER	NO. REQ'D.	SOURCE OF QUOTE
DISCHARGE BIN - CONVEYOR OUTLET		1	

DISCHARGE BIN

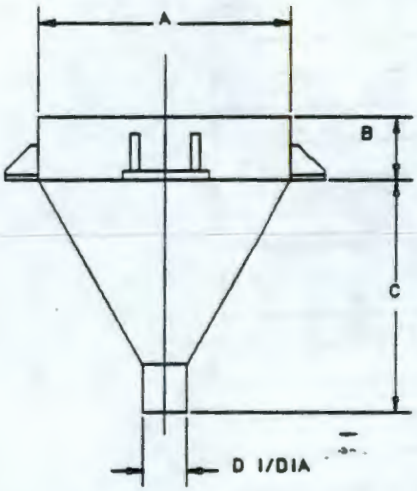

CONDITIONS OF SERVICE		DIMENSIONS	
APPLICATION: GUIDE FOR REACTIVE METALS FROM CONVEYOR INTO 55 GALLON DRUM		A: 2'-6"	F:
UNIT LOAD DESCRIPTION: REACTIVE METALS WASTE		B: 9"	G:
UNIT LOAD WEIGHT: 1,000 LBS	DUTY: 8 HRS/DAY	C: 3'-0"	H:
		D: 12"	I:
		E:	J:
CONSTRUCTION			
MATERIAL: A36			
SUPPORT: LUGS			

9413227.0768

NO. VESSELS REQ'D. (☐ HORIZ - ☒ VERT.) 2	CUSTOMER: DOE-RL/WHC
SHELL DIA. ☒ I.D. - ☐ O.D.: 4'	PROJECT: WRAP FACILITY MODULE 2A
SHELL THICKNESS: 3/16"	LOCATION: HANFORD, WA
HEADS THICKNESS: ASME F&D 3/16"	☒ CDR ☐ TITLE I ☐ TITLE II ☐ TITLE III
SHELL & HEAD THICKNESS INCLUDE C.A: YES	
SHELL LENGTH (SEAM TO SEAM): 5'-6"	
SUPPORT: SKIRT - CARBON STEEL 1/4" THICK	
CODE: DESIGN CONDITIONS:	

ITEM NO. T-07-101A,B

	OPER.	DESIGN	ALLOW.
PRESS. (PSIG)	-1" H_2O		
TEMP. (°F)	AMB		

CORR. ALLOW. SHELL: 1/16 HEADS: 1/16

X-RAY: SPOT STRESS RELIEF: NO

WINDLOAD:

SEISMIC ZONE: UBC SEISMIC ZONE 2B

MATERIALS

HEADS: STAINLESS STEEL

SHELL: STAINLESS STEEL

NOZZLES & FLANGES: STAINLESS STEEL

GASKETS:

NOZZLES &	NO.	SIZE-RATING-FACE
1. INLET	1	3" - 150 - RF
2. OUTLET	1	1.5" - 150 - RF
3. OVERFLOW	1	3" - 150 - RF
4. SOLIDS SLURRY	1	1.5" - 150 - RF
5. SUMP CONNECT	1	1.5 - 150 - RF
6. OFF-GAS	1	2" - 150 - RF
7. MANWAY	1	24" - 150 - RF
8. MIXER	1	6" - 150 - RF
9.		
10.		
11.		
12.		
13.		
14.		
15.		

INTERNALS & ACCESSORIES	FURNISHED BY VESSEL PAD.	OTHERS
FILTER ELEM.		
PACKING		
INSUL. RINGS		
LADDERS & PLATFORMS		

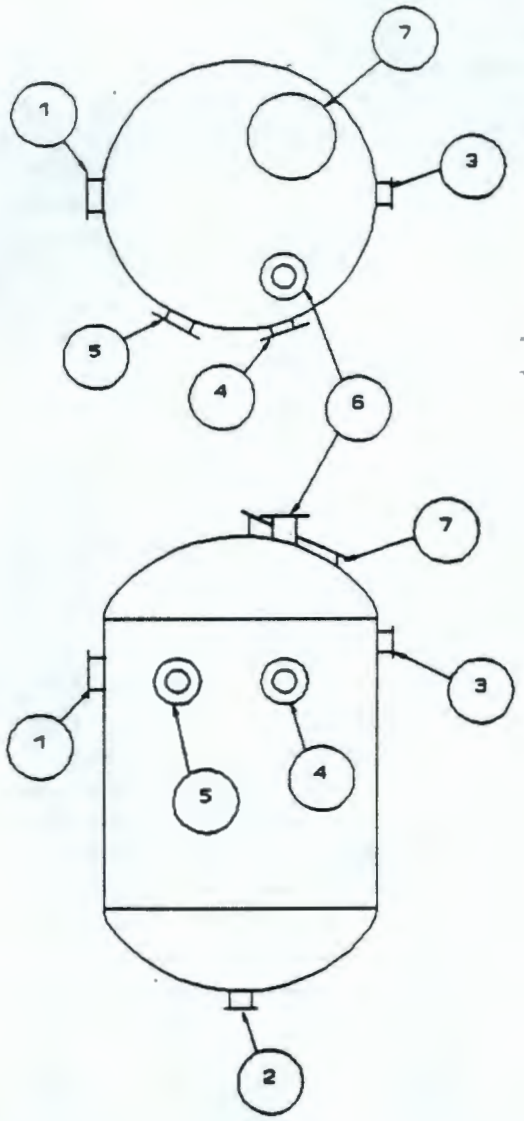

NOTES: 1. ALL COUPLING 6000#, UNLESS OTHERWISE

NO.	DATE	BY	REVISIONS

VESSEL: NON-ACTIVE WASTE COLLECTION TANK

FOR:

PLANT:

LOCATION:

ORDER NO.: 6237.006 ITEM NO.:

MFGR.:

DATE: 4/09/92 BY: TPS

UNITED ENGINEERS & CONSTRUCTORS
A Raytheon Company
Western Operations

9413227.0769

NO. VESSELS REQ'D. (☐ HORIZ - ☒ VERT.) 1	CUSTOMER: DOE-RL/WHC
SHELL DIA. ☒ I.D. - ☐ O.D.: 12'	PROJECT: WRAP FACILITY MODULE 2A
SHELL THICKNESS: 1/4"	LOCATION: HANFORD, WA
HEADS THICKNESS: ASME F&D 3/16"	☒ CDR ☐ TITLE I ☐ TITLE II ☐ TITLE III
SHELL & HEAD THICKNESS INCLUDE C.A: YES	
SHELL LENGTH (SEAM TO SEAM): 12'	
SUPPORT: SKIRT - CARBON STEEL 3/16" THICK	
CODE: DESIGN CONDITIONS:	

ITEM NO. T-07-201

	OPER.	DESIGN	ALLOW.
PRESS. (PSIG)	-1" H_2O		1.0 PSI
TEMP. (°F)	AMB	AMB	100°F

CORR. ALLOW. SHELL: 1/16 HEADS: 1/16

X-RAY: SPOT STRESS RELIEF: NO

WINDLOAD:

SEISMIC ZONE: UBC SEISMIC ZONE 2B

MATERIALS

HEADS: STAINLESS STEEL

SHELL: STAINLESS STEEL

NOZZLES & FLANGES: STAINLESS STEEL

GASKETS:

NOZZLES &	NO.	SIZE-RATING-FACE
1. INLET	1	3" - 150 - RF
2. OUTLET	1	2" - 150 - RF
3. OVERFLOW	1	3" - 150 - RF
4. SOLIDS SLURRY	1	2" - 150 - RF
5. SUMP CONNECT	1	2" - 150 - RF
6. OFF-GAS	1	2" - 150 - RF
7. MANWAY	1	24" - 150 - RF
8.		
9.		
10.		
11.		
12.		
13.		
14.		
15.		

INTERNALS & ACCESSORIES	FURNISHED BY VESSEL PAD.	FURNISHED BY OTHERS
FILTER ELEM.		
PACKING		
INSUL. RINGS		
LADDERS & PLATFORMS		

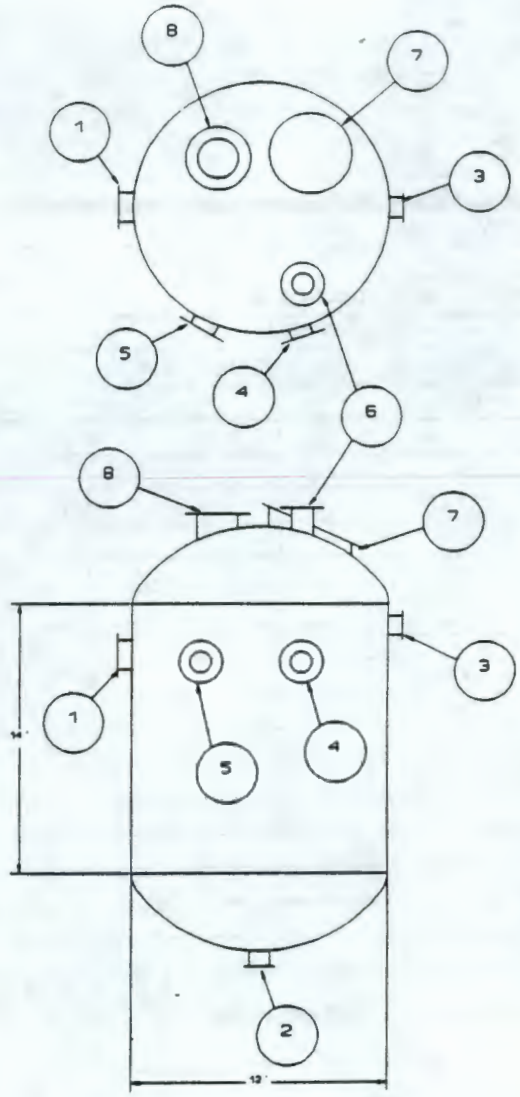

NOTES: 1. ALL COUPLING 6000#, UNLESS OTHERWISE

NO.	DATE	BY	REVISIONS

VESSEL: ACTIVE WASTE COLLECTION TANK

FOR:

PLANT:

LOCATION:

ORDER NO.: 6237.006 ITEM NO.:

MFGR.:

DATE: 04/09/92 BY: TPS

UNITED ENGINEERS & CONSTRUCTORS
A Raytheon Company
Western Operations

9413227.0770

NO. VESSELS REQ'D. (☐ HORIZ - ☒ VERT.) 1	CUSTOMER: DOE-RL/WHC
SHELL DIA. ☒ I.D. - ☐ O.D.: 8'	PROJECT: WRAP FACILITY MODULE 2A
SHELL THICKNESS: 3/16"	LOCATION: HANFORD, WA
HEADS THICKNESS: 3/16" ASME F&D	☒ CDR ☐ TITLE I ☐ TITLE II ☐ TITLE III
SHELL & HEAD THICKNESS INCLUDE C.A: YES	
SHELL LENGTH (SEAM TO SEAM): 8'	
SUPPORT: SKIRT - CARBON STEEL	
CODE: ASME VIII DESIGN CONDITIONS:	

ITEM NO. T-07-202

	OPER.	DESIGN	ALLOW.
PRESS. (PSIG)	-1" H_2O		
TEMP. (°F)	60		

CORR. ALLOW. SHELL: 1/16" HEADS: 1/16"

X-RAY: SPOT STRESS RELIEF: NO

WINDLOAD:

SEISMIC ZONE: UBC SEISMIC ZONE 2B

MATERIALS

HEADS: STAINLESS STEEL T304

SHELL: STAINLESS STEEL

NOZZLES & FLANGES: STAINLESS STEEL

GASKETS:

NOZZLES &	NO.	SIZE-RATING-FACE
1. FILL	1	2" - 150# - RF
2. PUMP SUCTION	1	2" - 150# - RF
3. OVERFLOW	1	2" - 150# - RF
4. SUMP CONNECT	1	2" - 150# - RF
5. VENT	1	2" - 150# - RF
6. MIXER	1	6" - 150# - RF
7 MANWAY	1	18" - 150# - RF
8.		
9.		
10.		
11.		
12.		
13.		
14.		
15.		

INTERNALS & ACCESSORIES	FURNISHED BY VESSEL PAD.	OTHERS
FILTER ELEM.		
PACKING		
LADDERS & PLATFORMS		
INTERNAL MIXER BAFFLES (4)	X	

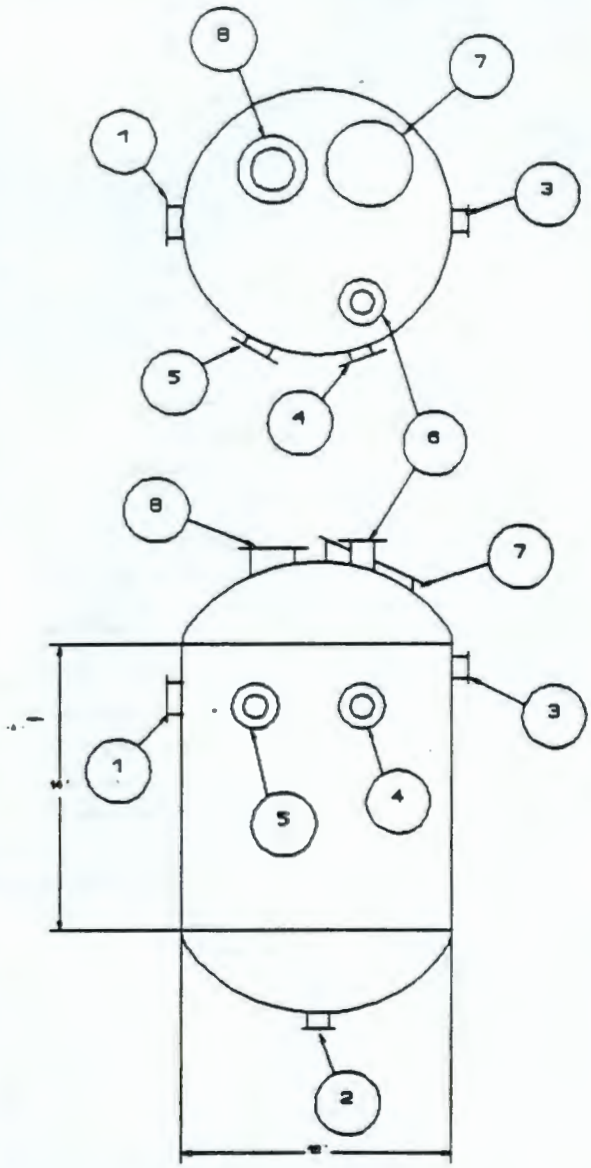

NOTES: 1. ALL COUPLING 6000#, UNLESS OTHERWISE

NO.	DATE	BY	REVISIONS

VESSEL: TREATED ACTIVE WASTE TANK

FOR:

PLANT:

LOCATION:

ORDER NO.: 6237.006 ITEM NO.:

MFGR.:

DATE: 04/20/92 BY: TPS

UNITED ENGINEERS & CONSTRUCTORS
A Raytheon Company
Western Operations

9413227.0771

G:\BECKY\WP51\WRAP\T07202.RV0

NO. VESSELS REQ'D. (☐ HORIZ - ☒ VERT.) 1	CUSTOMER: DOE-RL/WHC
SHELL DIA. ☒ I.D. - ☐ O.D.: 27"	PROJECT: WRAP FACILITY MODULE 2A
SHELL THICKNESS: 1/4"	LOCATION: HANFORD, WA
HEADS THICKNESS: 1/4" FLAT FLANGE & BOTTOM	☒ CDR ☐ TITLE I ☐ TITLE II ☐ TITLE III
SHELL & HEAD THICKNESS INCLUDE C.A: YES	
SHELL LENGTH (SEAM TO SEAM): 36"	
SUPPORT: FULLY SUPPORTED FLAT BOTTOM	
CODE: UL-142 DESIGN CONDITIONS:	

ITEM NO. T-12-101

	OPER.	DESIGN	ALLOW.
PRESS. (PSIG)	ATM		
TEMP. (°F)	60		

CORR. ALLOW. SHELL: 1/16" HEADS: 1/16"

X-RAY: NONE STRESS RELIEF: NO

WINDLOAD: SEISMIC ZONE

SEISMIC ZONE: UBC - 2B

MATERIALS

HEADS:

SHELL: CS - LINED

NOZZLES & FLANGES: CS - LINED

GASKETS:

NOZZLES &	NO.	SIZE-RATING-FACE
1. WATER PILL	1	1" - 150# - FF
2. POT FEEDER	1	1" - 150# - FF
3. VENT	1	1" - 150# - FF
4. PUMP SUCTION	1	1" - 150# - FF
5. DRAIN	1	1" - 150# - FF
6.		
7		
8.		
9.		
10.		
11.		
12.		
13.		
14.		
15.		

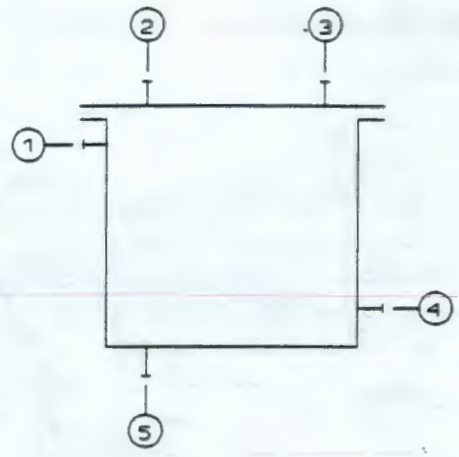

INTERNALS & ACCESSORIES	FURNISHED BY VESSEL PAD.	OTHERS
FILTER ELEM.		
PACKING		
INSUL. RINGS		
LADDERS & PLATFORMS		

NOTES: 1. ALL COUPLING 6000#, UNLESS OTHERWISE

NO.	DATE	BY	REVISIONS

VESSEL: ACID FEED TANK

FOR:

PLANT:

LOCATION:

ORDER NO.: ITEM NO.: T-12-101

MFGR.:

DATE: 04/17/92 BY: TPS

UNITED ENGINEERS & CONSTRUCTORS
A Raytheon Company
Western Operations

9112227.0772

NO. VESSELS REQ'D. (☐ HORIZ - ☒ VERT.) 1	CUSTOMER: DOE-RL/WHC
SHELL DIA. ☒ I.D. - ☐ O.D.: 27"	PROJECT: WRAP FACILITY MODULE 2A
SHELL THICKNESS: 1/4"	LOCATION: HANFORD, WA
HEADS THICKNESS: 1/4" FLAT FLANGE & BOTTOM	☒ CDR ☐ TITLE I ☐ TITLE II ☐ TITLE III
SHELL & HEAD THICKNESS INCLUDE C.A: YES	
SHELL LENGTH (SEAM TO SEAM): 36"	
SUPPORT: FULLY SUPPORTED FLAT BOTTOM	
CODE: UL-142 DESIGN CONDITIONS:	

	OPER.	DESIGN	ALLOW.
PRESS. (PSIG)	ATM		
TEMP. (°F)	60		

CORR. ALLOW. SHELL: 1/16" HEADS: 1/16"

X-RAY: NONE STRESS RELIEF: YES

WINDLOAD:

SEISMIC ZONE: UBC - 2B

MATERIALS

HEADS:

SHELL: CS

NOZZLES & FLANGES: CS

GASKETS:

NOZZLES &	NO.	SIZE-RATING-FACE
1. WATER PILL	1	1" - 150# - FF
2. POT FEEDER	1	1" - 150# - FF
3. VENT	1	1" - 150# - FF
4. PUMP SUCTION	1	1" - 150# - FF
5. DRAIN	1	1" - 150# - FF
6.		
7		
8.		
9.		
10.		
11.		
12.		
13.		
14.		
15.		

INTERNALS & ACCESSORIES	FURNISHED BY VESSEL PAD.	FURNISHED BY OTHERS
FILTER ELEM.		
PACKING		
INSUL. RINGS		
LADDERS & PLATFORMS		

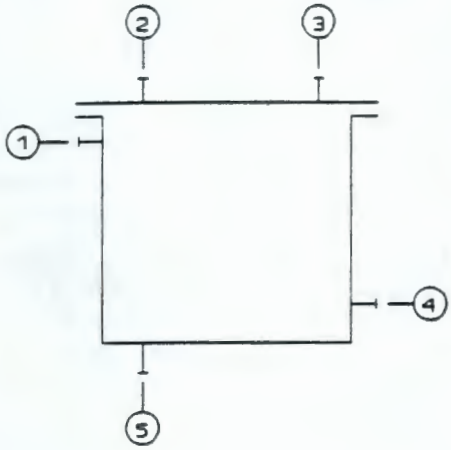

NOTES: 1. ALL COUPLING 6000#, UNLESS OTHERWISE

NO.	DATE	BY	REVISIONS

VESSEL: CAUSTIC FEED TANK

FOR:

PLANT:

LOCATION:

ORDER NO.: ITEM NO.: T-12-102

MFGR.:

DATE: 04/17/92 BY: TPS

UNITED ENGINEERS & CONSTRUCTORS
A Raytheon Company
Western Operations

9413227.0773

NO. VESSELS REQ'D. (☐ HORIZ - ☒ VERT.) 1	CUSTOMER: DOE-RL/WHC
SHELL DIA. ☒ I.D. - ☐ O.D.: 3'	PROJECT: WRAP FACILITY MODULE 2A
SHELL THICKNESS: 3/16"	LOCATION: HANFORD, WA
HEADS THICKNESS:	☒ CDR ☐ TITLE I ☐ TITLE II ☐ TITLE III
SHELL & HEAD THICKNESS INCLUDE C.A: YES	
SHELL LENGTH (SEAM TO SEAM): 4'	
SUPPORT: FULLY SUPPORTED FLAT BOTTOM	
CODE: UL-142 DESIGN CONDITIONS:	

ITEM NO. T-12-103

	OPER.	DESIGN	ALLOW.
PRESS. (PSIG)	ATM		
TEMP. (°F)	60		

CORR. ALLOW. SHELL: 1/16" HEADS: 1/16"

X-RAY: NONE STRESS RELIEF: NONE

WINDLOAD: SEISMIC ZONE

SEISMIC ZONE: UBC - 2B

MATERIALS

HEADS:

SHELL: SS

NOZZLES & FLANGES: SS

GASKETS:

NOZZLES &	NO.	SIZE-RATING-FACE
1. WATER FILL	1	1.5" - 150# - FF
2. POT FEEDER	1	1.5" - 150# - FF
3. VENT	1	1" - 150# - FF
4. PUMP SUCTION	1	1.5" - 150# - FF
5. DRAIN	1	1.5" - 150# - FF
6.		
7		
8.		
9.		
10.		
11.		
12.		
13.		
14.		
15.		

INTERNALS & ACCESSORIES	FURNISHED BY VESSEL PAD.	FURNISHED BY OTHERS
FILTER ELEM.		
PACKING		
INSUL. RINGS		
LADDERS & PLATFORMS		

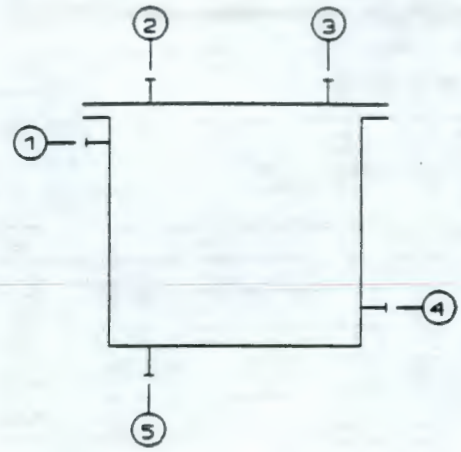

NOTES: 1. ALL COUPLING 6000#, UNLESS OTHERWISE

NO.	DATE	BY	REVISIONS

VESSEL: DELON SOLUTION FEED TANK

FOR:

PLANT:

LOCATION:

ORDER NO.: ITEM NO.: T-12-103

MFGR.:

UNITED ENGINEERS & CONSTRUCTORS
A Raytheon Company
Western Operations

DATE: 04/17/92 BY: TPS

NO. VESSELS REQ'D. (☐ HORIZ - ☒ VERT.) 1	CUSTOMER: DOE-RL/WHC	ITEM NO. T-12-104
SHELL DIA. ☒ I.D. - ☐ O.D.: 21"	PROJECT: WRAP FACILITY MODULE 2A	
SHELL THICKNESS:	LOCATION: HANFORD, WA	
HEADS THICKNESS:	☒ CDR ☐ TITLE I ☐ TITLE II ☐ TITLE III	

SHELL & HEAD THICKNESS INCLUDE C.A:

SHELL LENGTH (SEAM TO SEAM): 24"

SUPPORT:

CODE: UL 142 DESIGN CONDITIONS:

	OPER.	DESIGN	ALLOW.
PRESS. (PSIG)	ATM		
TEMP. (°F)	60		

CORR. ALLOW. SHELL: HEADS:

X-RAY: STRESS RELIEF:

WINDLOAD:

SEISMIC ZONE: UBC - 2B

MATERIALS

HEADS:

SHELL:

NOZZLES & FLANGES:

GASKETS:

NOZZLES &	NO.	SIZE-RATING-FACE
1. FILL	1	1" - 150# - FF
2. OUTLET	1	1" - 150# - FF
3. VENT	1	1" - 150# - FF
4.		
5.		
6.		
7		
8.		
9.		
10.		
11.		
12.		
13.		
14.		
15.		

INTERNALS & ACCESSORIES	FURNISHED BY VESSEL PAD.	FURNISHED BY OTHERS
FILTER ELEM.		
PACKING		
INSUL. RINGS		
LADDERS & PLATFORMS		

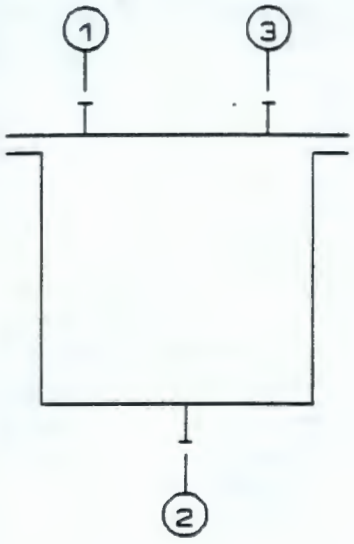

NOTES: 1. ALL COUPLING 6000#, UNLESS OTHERWISE

2. TANK SHALL HAVE A CALIBRATED LEVEL INDICATOR

NO.	DATE	BY	REVISIONS

VESSEL: ACID FEED POT

FOR:

PLANT:

LOCATION:

ORDER NO.: ITEM NO.: T-12-104

MFGR.:

DATE: 04/17/92 BY: TPS

UNITED ENGINEERS & CONSTRUCTORS
A Raytheon Company
Western Operations

9413227.0775

NO. VESSELS REQ'D. (☐ HORIZ - ☒ VERT.)	CUSTOMER: DOE-RL/WHC
SHELL DIA. ☒ I.D. - ☐ O.D.: 21"	PROJECT: WRAP FACILITY MODULE 2A
SHELL THICKNESS:	LOCATION: HANFORD, WA
HEADS THICKNESS:	☒ CDR ☐ TITLE I ☐ TITLE II ☐ TITLE III
SHELL & HEAD THICKNESS INCLUDE C.A:	
SHELL LENGTH (SEAM TO SEAM): 24"	
SUPPORT:	
CODE: UL 142 DESIGN CONDITIONS:	

ITEM NO. T-12-105

	OPER.	DESIGN	ALLOW.
PRESS. (PSIG)	ATM		
TEMP. (°F)	60		

CORR. ALLOW. SHELL: HEADS:

X-RAY: STRESS RELIEF:

WINDLOAD:

SEISMIC ZONE: UBC - 2B

MATERIALS

HEADS:

SHELL:

NOZZLES & FLANGES:

GASKETS:

NOZZLES &	NO.	SIZE-RATING-FACE
1. FILL	1	1" - 150# - FF
2. OUTLET	1	1" - 150# - FF
3. VENT	1	1" - 150# - FF
4.		
5.		
6.		
7		
8.		
9.		
10.		
11.		
12.		
13.		
14.		
15.		

INTERNALS & ACCESSORIES	FURNISHED BY VESSEL PAD.	FURNISHED BY OTHERS
FILTER ELEM.		
PACKING		
INSUL. RINGS		
LADDERS & PLATFORMS		

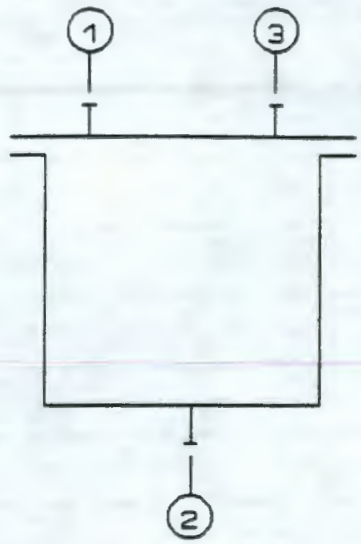

NOTES: 1. ALL COUPLING 6000#, UNLESS OTHERWISE

2. TANK SHALL HAVE A CALIBRATED LEVEL INDICATOR

NO.	DATE	BY	REVISIONS

VESSEL: CAUSTIC FEED POT

FOR:

PLANT:

LOCATION:

ORDER NO.: ITEM NO.: T-12-105

MFGR.:

DATE: 04/17/92 BY: TPS

UNITED ENGINEERS & CONSTRUCTORS
A Raytheon Company
Western Operations

NO. VESSELS REQ'D. (☐ HORIZ - ☒ VERT.)	CUSTOMER: DOE-RL/WHC
SHELL DIA. ☒ I.D. - ☐ O.D.: 21"	PROJECT: WRAP FACILITY MODULE 2A
SHELL THICKNESS:	LOCATION: HANFORD, WA
HEADS THICKNESS:	☒ CDR ☐ TITLE I ☐ TITLE II ☐ TITLE III
SHELL & HEAD THICKNESS INCLUDE C.A:	
SHELL LENGTH (SEAM TO SEAM): 24"	
SUPPORT:	
CODE: UL 142 DESIGN CONDITIONS:	

ITEM NO. T-12-106

	OPER.	DESIGN	ALLOW.
PRESS. (PSIG)	ATM		
TEMP. (°F)	60		

CORR. ALLOW. SHELL: HEADS:

X-RAY: STRESS RELIEF:

WINDLOAD:

MATERIALS

HEADS:

SHELL:

NOZZLES & FLANGES:

GASKETS:

NOZZLES &	NO.	SIZE-RATING-FACE
1. FILL	1	1" - 150# - FF
2. OUTLET	1	1" - 150# - FF
3. VENT	1	1" - 150# - FF
4.		
5.		
6.		
7		
8.		
9.		
10.		
11.		
12.		
13.		
14.		
15.		

INTERNALS & ACCESSORIES	FURNISHED BY VESSEL PAD.	FURNISHED BY OTHERS
FILTER ELEM.		
PACKING		
INSUL. RINGS		
LADDERS & PLATFORMS		

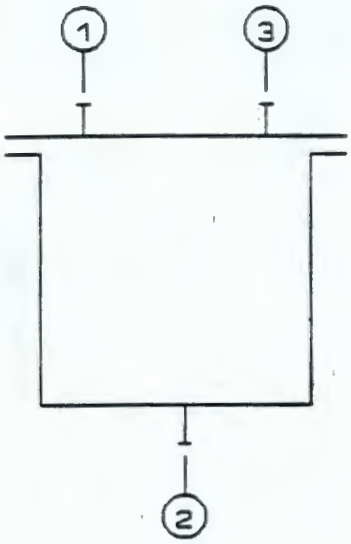

NOTES: 1. ALL COUPLING 6000#, UNLESS OTHERWISE

2. TANK SHALL HAVE A CALIBRATED LEVEL INDICATOR

NO.	DATE	BY	REVISIONS

VESSEL: DECON SOLN FEED POT

FOR:

PLANT:

LOCATION:

ORDER NO.: ITEM NO.: T-12-106

MFGR.:

UNITED ENGINEERS & CONSTRUCTORS
A Raytheon Company
Western Operations

DATE: 04/17/92 BY: TPS

9413227.0777

NO. VESSELS REQ'D. (☐ HORIZ - ☒ VERT.) 1	CUSTOMER: DOE-RL/WHC	ITEM NO. H-06-201
SHELL DIA. ☒ I.D. - ☐ O.D.: 30"	PROJECT: WRAP FACILITY MODULE 2A	
SHELL THICKNESS:	LOCATION: HANFORD, WA	
HEADS THICKNESS:	☒ CDR ☐ TITLE I ☐ TITLE II ☐ TITLE III	

SHELL & HEAD THICKNESS INCLUDE C.A:

SHELL LENGTH (SEAM TO SEAM): 36"

SUPPORT: BRACKETS (4 OF ATTACHED TO SHELL)

CODE: DESIGN CONDITIONS:

	OPER.	DESIGN	ALLOW.
PRESS. (PSIG)	1 ATM		
TEMP. (°F)	500	550	

CORR. ALLOW. SHELL: 1/16" HEADS: 1/16"

X-RAY: SPOT STRESS RELIEF: NO

WINDLOAD:

SEISMIC ZONE:

MATERIALS

HEADS: STAINLESS STEEL

SHELL: STAINLESS STEEL

NOZZLES & FLANGES: STAINLESS STEEL

GASKETS:

NOZZLES &	NO.	SIZE-RATING-FACE
1. NITROGEN PURGE	1	1" - 300 - RF
2. OFF-GAS VENTS	1	3" - 300 - RF
3. CHARGE	1	18" - 300 - RF
4. DISCHARGE	1	18" - 300 - RF
5.		
6.		
7		
8.		
9.		
10.		
11.		
12.		
13.		
14.		
15.		

INTERNALS & ACCESSORIES	FURNISHED BY VESSEL PAD.	OTHERS
FILTER ELEM.		
ELECTRIC HEATERS 17,000 BTU/HR	3 OFF	
INSUL. RINGS		
LADDERS & PLATFORMS		

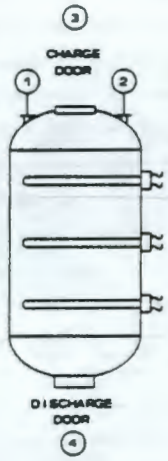

NOTES: 1. ALL COUPLING 6000#, UNLESS OTHERWISE

NO.	DATE	BY	REVISIONS

VESSEL: MERCURY EVAPORATOR

FOR:

PLANT:

LOCATION:

ORDER NO.: 6237.006 ITEM NO.:

MFGR.:

DATE: 04/28/92 BY: GBD

UNITED ENGINEERS & CONSTRUCTORS
A Raytheon Company
Western Operations

UNITED ENGINEERS & CONSTRUCTORS A Raytheon Company Western Operations	EQUIPMENT DATA SHEET ☒ CDR ☐ TITLE I ☐ TITLE II ☐ TITLE III	ITEM NUMBER X-06-301	PAGE 1 OF 1

CUSTOMER & LOCATION	PROJECT	UE&C JOB NO. 6237.006	DATE: 06/18/92
DOE-RL/WHC HANFORD, WA	WRAP FACILITY MODULE 2A	ACCOUNT NO.	BY: GBD

REVISIONS (DATE & BY)	A		B		C		D	
	E		F		G		H	

SERVICE	MANUFACTURER	NO. REQ'D.	SOURCE OF QUOTE
FEED HOPPER - VIBRATORY SCREEN		1	

FEED HOPPER

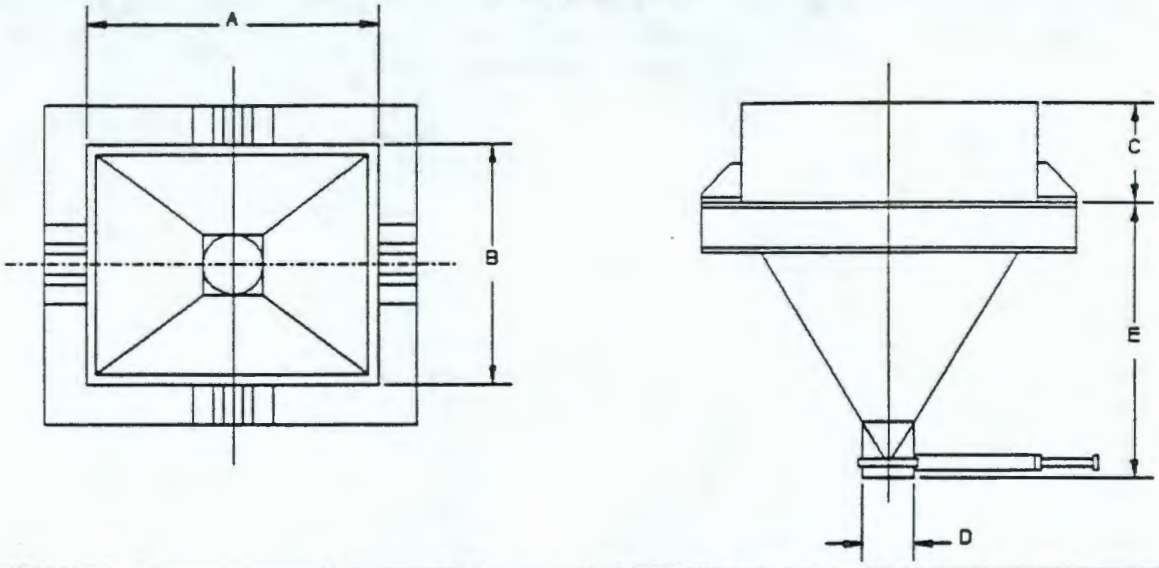

CONDITIONS OF SERVICE		DIMENSIONS	
APPLICATION: TRANSFER CONTENTS OF WASTE DRUM TO VIBRATORY SCREEN		A: 3'-0"	F:
UNIT LOAD DESCRIPTION: REACTIVE METALS WASTE		B: 4'-0"	G:
UNIT LOAD WEIGHT: 1,000 LBS	DUTY: 8 HRS/DAY	C: 9"	H:
		D: 12" DIA	I:
		E: 4'-0"	J:
CONSTRUCTION			
MATERIAL: A36			
SUPPORT: RING			
DISCHARGE VALVE: 12" SLIDE			
VALVE OPERATION: PNEUMATIC			

9413227.0779

NO. VESSELS REQ'D. (☐ HORIZ - ☒ VERT.) 3	CUSTOMER: DOE-RL/WHC
SHELL DIA. ☒ I.D. - ☐ O.D.: 48"	PROJECT: WRAP FACILITY MODULE 2A
SHELL THICKNESS:	LOCATION: HANFORD, WA
HEADS THICKNESS S.E:	☒ CDR ☐ TITLE I ☐ TITLE II ☐ TITLE III
SHELL & HEAD THICKNESS INCLUDE C.A:	
SHELL LENGTH (SEAM TO SEAM): 5'-0"	
SUPPORT:	
CODE: DESIGN CONDITIONS:	

ITEM NO. V-05-301A,B,C

	OPER.	DESIGN	ALLOW.
PRESS. (PSIG)	0- -15"WC	±20" WC	
TEMP. (°F)	60°	20-150	

CORR. ALLOW. SHELL: HEADS:

X-RAY: STRESS RELIEF:

WINDLOAD:

SEISMIC ZONE: UBC SEISMIC ZONE 2B

MATERIALS

HEADS: 304L

SHELL: 304L

NOZZLES & FLANGES: 304L

GASKETS:

NOZZLES &	NO.	SIZE-RATING-FACE
1. GAS INLET	1	6"
2. GAS OUTLET	1	6"
3. CARBON FILL	1	6"
4. CARBON DRAIN	2	6"
5. SAMPLE CONNECT	1	1"
6.		
7		
8.		
9.		
10.		
11.		
12.		
13.		
14.		
15.		

INTERNALS & ACCESSORIES EACH VESSEL	FURNISHED BY VESSEL PAD.	FURNISHED BY OTHERS
FILTER ELEM.		
PACKING RETAINING SCREENS	2	
INSUL. RINGS		
LADDERS & PLATFORMS		

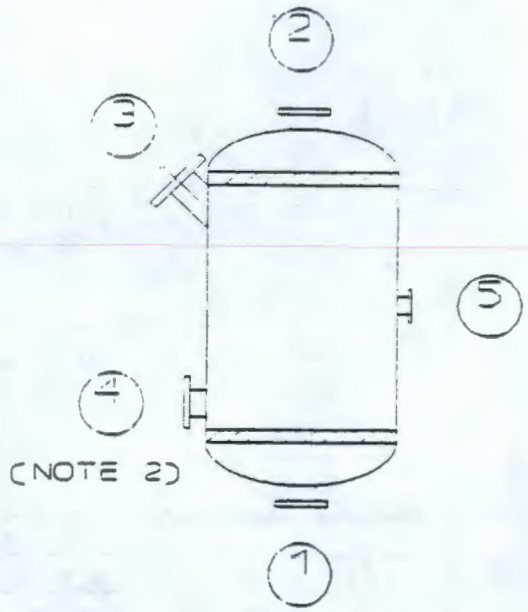

NOTES: 1. ALL COUPLING 6000#, UNLESS OTHERWISE SEPCIFIED

2. LOCATE DRAIN NOZZLES 90° APART

3. RETAINING SCREENS ARE 10 MESH (U.S.) BOTTOM SCREEN SUPPORTS 950 LBS OF CARBON PELLETS

NO.	DATE	BY	REVISIONS

VESSEL: VAULT EXHAUST CARBON ADSORBER

FOR:

PLANT:

LOCATION:

ORDER NO.: 6237.006 ITEM NO.:

MFGR.:

DATE: 07/23/92 BY: RLH

UNITED ENGINEERS & CONSTRUCTORS
A Raytheon Co
Western Operations

9413227.0780

NO. VESSELS REQ'D. (☐ HORIZ - ☒ VERT.) 2	CUSTOMER: DOE-RL/WHC
SHELL DIA. ☒ I.D. - ☐ O.D.: 36"	PROJECT: WRAP FACILITY MODULE 2A
SHELL THICKNESS:	LOCATION: HANFORD, WA
HEADS THICKNESS S.E.:	☒ CDR ☐ TITLE I ☐ TITLE II ☐ TITLE III
SHELL & HEAD THICKNESS INCLUDE C.A:	
SHELL LENGTH (SEAM TO SEAM): 5'-0"	
SUPPORT:	
CODE: DESIGN CONDITIONS:	

ITEM NO. V-04-101A,B

	OPER.	DESIGN	ALLOW.
PRESS. (PSIG)	0- -15"WC	±20" WC	
TEMP. (°F)	45-60°	20-150	

CORR. ALLOW. SHELL: HEADS:

X-RAY: STRESS RELIEF:

WINDLOAD:

SEISMIC ZONE: UBC SEISMIC ZONE 2B

MATERIALS

HEADS: 304L

SHELL: 304L

NOZZLES & FLANGES: 304L

GASKETS:

NOZZLES &	NO.	SIZE-RATING-FACE
1. GAS INLET	1	6"
2. GAS OUTLET	1	6"
3. CARBON FILL	1	6"
4. CARBON DRAIN	2	6"
5. SAMPLE CONNECT	1	1"
6.		
7		
8.		
9.		
10.		
11.		
12.		
13.		
14.		
15.		

INTERNALS & ACCESSORIES EACH VESSEL	FURNISHED BY VESSEL PAD.	FURNISHED BY OTHERS
FILTER ELEM.		
PACKING RETAINING SCREENS	2	
INSUL. RINGS		
LADDERS & PLATFORMS		

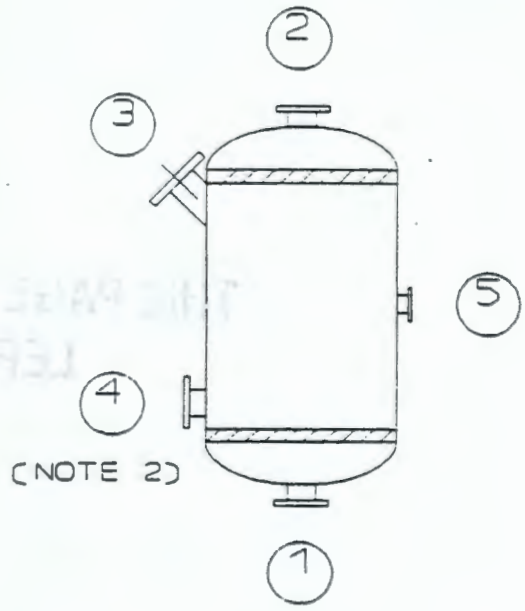

NOTES: 1. ALL COUPLING 6000#, UNLESS OTHERWISE SPECIFIED

2. LOCATE DRAIN NOZZLES 90° APART

3. RETAINING SCREENS ARE 10 MESH (U.S.) BOTTOM SCREEN SUPPORTS 950 LBS OF CARBON PELLETS

NO.	DATE	BY	REVISIONS

VESSEL: POLYMER ENCAPSULATION OFF-GAS CARBON ADSORBER

FOR:

PLANT:

LOCATION:

ORDER NO.: 6237.006 ITEM NO.:

MFGR.:

DATE: 07/23/92 BY: KDV

UNITED ENGINEERS & CONSTRUCTORS
A Raytheon Company
Western Operations

9413227.0781

THIS PAGE INTENTIONALLY
LEFT BLANK

SECTION 15200

9113227.0782

THIS PAGE INTENTIONALLY
LEFT BLANK

THIS PAGE INTENTIONALLY
LEFT BLANK

WRAP MODULE 2A

SPECIFICATION SECTION
FOR
15200 AGITATORS AND MIXERS

PART 1 GENERAL

1.01 SECTION SCOPE
1.02 RELATED SECTIONS
1.03 REFERENCES
1.04 SYSTEM DESCRIPTION
1.05 SUBMITTALS
1.06 DELIVERY, STORAGE AND HANDLING
1.07 SITE CONDITIONS

PART 2 PRODUCTS

2.01 MANUFACTURERS
2.02 MATERIALS
2.03 EQUIPMENT
2.04 COMPONENTS
2.05 FABRICATION
2.06 SHOP QUALITY CONTROL

PART 3 EXECUTION

3.01 PREPARATION
3.02 ERECTION, INSTALLATION AND APPLICATION
3.03 FIELD QUALITY CONTROL
3.04 ADJUSTING AND CLEANING
3.05 DEMONSTRATION
3.06 PROTECTION

APPENDIX

APPENDIX A DATA SHEETS

WRAP MODULE 2A

SECTION 15200

AGITATORS AND MIXERS

PART 1 GENERAL

1.01 SECTION SCOPE

A. This specification establishes the requirements for detailed design, fabrication, installation, start-up, and acceptance testing of Agitators and Mixers used in WRAP 2A Facility.

1.02 RELATED SECTIONS

1.03 REFERENCES

A. Anti-Friction Bearing Manufacturer's Association
AFBMA All applicable sections.

B. American National Standards Institute
ANSI All applicable sections.

C. American Society for Testing and Materials
ASTM All applicable sections.

D. American Welding Society
AWS D1.1 "Structural Welding Code"

E. Occupational Safety and Health Administration
OSHA 29 CFR Part 1910

F. National Electric Code
NEC All applicable sections.

G. National Electric Manufacturers Association
NEMA MG-1 Motors and Generators

H. American Gear Manufacturers Association
AGMA All applicable sections.

I. Mechanical Power Transmission Association
MPTA ND 301 All applicable sections.

9413227.0784

1.04 SYSTEM DESCRIPTION

A.

1. Provide vibratory, paddle type and inline mixers for various plant process systems.

Equipment Tag Nos. WBS Area Location Numbers and equipment data sheets for this description are provided in **Appendix A.**

END OF SECTION

9413227.0785

WRAP MODULE 2A

APPENDIX A

EQUIPMENT/INSTRUMENT DATA SHEETS

WBS LOCATION	EQUIPMENT TAG	SERVICE
1105	M-05-401	Polymer Mixing Agitator
1105	M-05-402	In-Drum Mixer
1105	M-05-403	Vibratory Drum Mixer
1105	M-05-411	Vibratory Drum Mixer
1105	M-05-412	Vibratory Drum Mixer
1105	M-05-413	Vibratory Drum Mixer
1105	M-05-404	In-Line Mixer 1
1105	M-05-405	In-Line Mixer 2
1105	M-05-406	In-Line Mixer 3
1105	M-05-407	In-Line Mixer 4
1105	M-05-408	In-Drum Mixer
1105	M-05-409	In-Drum Mixer
1105	M-05-410	In-Drum Mixer
1105	M-05-203	Grout/Waste Drum Mixer
1107	M-07-101 A;B	Non-Active Waste Tank Mixer
1107	M-07-201	Treated Active Waste Tank Mixer
1112	M-12-101	Acid Tank Mixer
1112	M-12-102	Caustic Tank Mixer
1112	M-12-103	Decon Solution Tank Mixer
1105	M-05-201	Vibratory Drum Mixer

9413227.0786

UNITED ENGINEERS & CONSTRUCTORS A Raytheon Company Western Operations	EQUIPMENT DATA SHEET ☒ CDR ☐ TITLE I ☐ TITLE II ☐ TITLE III	ITEM NUMBER M-06-401	PAGE 1 OF 1
CUSTOMER & LOCATION: DOE-RL/WHC HANFORD, WA	PROJECT: WRAP FACILITY MODULE 2A	UE&C JOB NO. 6237.006 / ACCOUNT NO.	DATE: 06/18/92 / BY: RLH

REVISIONS (DATE & BY)	A		B		C		D	
	E		F		G		H	

SERVICE	MANUFACTURER	NO. REQ'D	SOURCE OF QUOTE
IN-TANK POLYMER MIXER		1**	

PHYSICAL PROPERTIES OF MATERIALS

COMPONENT	FLOW RATE	WT. % *	S. G.	VIS. (CP)	TEMP.	
VES RESIN		92.0	1.03	130	60	
EXTENDER		7.4	0.91	0.8	60	
PROMOTER		0.6			60	
TOTAL		100.0				

MIXTURE: S.G. 1.03 VIS. 130 CP

SOLID PROPERTIES: ☐ SOLUBLE ☐ INSOLUBLE ☐ ABRASIVE

OPERATING CONDITIONS

OPERATING PRESS. 0 PSIG TEMP. 60°F

LEVEL IN TANK 5'

CLASS OF OPERATION: ☐ HEAT TRANSFER ☐ DISSOLVING ☒ BLENDING MISCIBLE SOLIDS ☐ GAS DISPERSION ☐ BLENDING MISCIBLE LIQUIDS ☐ DISPENSING INSOLUBLE LIQUIDS ☒ SUSPENDING SOLIDS

MIXING CYCLE: ☐ CONTINUOUS TOTAL FLOW RATE ____ GPM

☒ BATCH DESIGNED TO MIX 1,100 GAL IN 30 MINUTES

VESSEL DETAILS

SIZE: 6'-0" DIA X 5'-0" SS TYPE: VERTICAL

TOP: ☐ OPEN ☒ CLOSED BOTTOM: ☐ FLAT ☒ CONE ☐ ROUND

MATERIAL OF CONSTRUCTION: STAINLESS STEEL

ENTRANCE: ☒ TOP ☐ SIDE

NOZZLE: SIZE & RATING: ____ MAT.: ____

DESIGN PRESS.: ____ PSIG TEMP. ____

☐ COILS ☐ BAFFLES SKETCH NO.: ____

MIXER DETAILS

☐ IMPELLER ☐ TURBINE ☒ PROPELLER

NO. OF IMPELLERS: 2 SIZE: ____ BLADES EA.: ____

IMPELLER RPM: ____ BHP: ____ MAT.: ____

BLADES: ☒ FIXED ☐ REMOVABLE ☐ FLAT

☐ UP THRUST ☐ DOWN THRUST ☐ STABILIZER REQ'D.

SHAFT: DIAM.: ____ LENGTH: 5'

MAT.: ____ CRITICAL SPEED: ____ RPM

SEALING REQUIREMENTS: ☐ PACKING TYPE: ____

☐ MECH. SEAL MFG. ☐ MODEL: ____

☐ CARTRIDGE ☐ DOUBLE ☐ SINGLE

MOUNTING: ☐ NOZZLE ☐ CLAMP ☐ BEAM

DRIVE DETAILS

☐ GEAR REDUCER:

TYPE: ____ RATIO: ____ LUBE: ____

AGMA CLASS: ____ SERVICE FACTOR: ____

COUPLINGS: MFG. & MODEL: ____

H.S. SHAFT: ☐ FLEXIBLE ☐ RIGID RPM: ____

L.S. SHAFT: ☐ FLEXIBLE ☐ RIGID RPM: ____

BEARINGS: ☐ RADIAL ☐ THRUST ☐ STEADY

MOTOR MFG.: ____

FURN. BY: ____ MTD. BY: ____

HP: 2 RPM: ____ VOLTS/PHASE/Hz: ____

ENC.: ____ INSUL.: ____ LUBE: ____

FRAME: ____ FULL LOAD AMPS: ____ STARTING AMPS: ____

GENERAL INFORMATION

WEIGHT: 150 LBS DIMENSION PRINT NO.: ____

REMARKS: *FOR BATCH OPERATIONS

UNITED ENGINEERS & CONSTRUCTORS A Raytheon Company Western Operations	EQUIPMENT DATA SHEET ☒ CDR ☐ TITLE I ☐ TITLE II ☐ TITLE III	ITEM NUMBER M-05-402	PAGE 1 OF 1
CUSTOMER & LOCATION: DOE-RL/WHC HANFORD, WA	PROJECT: WRAP FACILITY MODULE 2A	UE&C JOB NO. 6237.006 / ACCOUNT NO.	DATE: 06/18/92 / BY: RLH

REVISIONS (DATE & BY)	A	B	C	D
	E	F	G	H

SERVICE	MANUFACTURER	NO. REQ'D	SOURCE OF QUOTE
IN-DRUM MIXER		1**	

PHYSICAL PROPERTIES OF MATERIALS

COMPONENT	FLOW RATE	WT. % *	S. G.	VIS. (CP)	TEMP.	
MIXED POLY		40	1.03	130	60	
WASTE		60				

MIXTURE: S.G.____ VIS.____ CP

SOLID PROPERTIES: ☐ SOLUBLE ☐ INSOLUBLE ☐ ABRASIVE

OPERATING CONDITIONS

OPERATING PRESS. 0 PSIG TEMP. 60°F

LEVEL IN TANK

CLASS OF OPERATION: ☐ HEAT TRANSFER ☐ DISSOLVING ☐ BLENDING MISCIBLE SOLIDS ☐ GAS DISPERSION ☐ BLENDING MISCIBLE LIQUIDS ☐ DISPENSING INSOLUBLE LIQUIDS ☒ SUSPENDING SOLIDS

MIXING CYCLE: ☐ CONTINUOUS TOTAL FLOW RATE____ GPM

☐ BATCH DESIGNED TO MIX 50 GAL IN 15 MINUTES

VESSEL DETAILS

SIZE: 26" DIA TYPE: 55 GAL DRUM

TOP: ☒ OPEN ☐ CLOSED BOTTOM: ☐ FLAT ☐ CONE ☐ ROUND

MATERIAL OF CONSTRUCTION: CARBON STEEL W/PE LINING

ENTRANCE: ☒ TOP ☐ SIDE

NOZZLE: SIZE & RATING:_____ MAT.:_____

DESIGN PRESS.:_____ PSIG TEMP._____

☐ COILS ☐ BAFFLES SKETCH NO.:

MIXER DETAILS

☐ IMPELLER ☐ TURBINE ☒ PROPELLER

NO. OF IMPELLERS: 1 SIZE: 15" DIA BLADES EA.: 3

IMPELLER RPM: 400 BHP:_____ MAT.:_____

BLADES: ☐ FIXED ☒ REMOVABLE ☐ FLAT

☐ UP THRUST ☐ DOWN THRUST ☐ STABILIZER REQ'D.

SHAFT: DIAM.:_____ LENGTH:_____

MAT.:_____ CRITICAL SPEED:_____ RPM

SEALING REQUIREMENTS: ☐ PACKING TYPE:_____

☐ MECH. SEAL MFG. ☐ MODEL:_____

☐ CARTRIDGE ☐ DOUBLE ☐ SINGLE

MOUNTING: ☐ NOZZLE ☐ CLAMP ☐ BEAM

DRIVE DETAILS

☐ GEAR REDUCER:

TYPE:_____ RATIO:_____ LUBE:_____

AGMA CLASS:_____ SERVICE FACTOR:_____

COUPLINGS: MFG. & MODEL:_____

H.S. SHAFT: ☐ FLEXIBLE ☐ RIGID RPM:_____

L.S. SHAFT: ☐ FLEXIBLE ☐ RIGID RPM:_____

BEARINGS: ☐ RADIAL ☐ THRUST ☐ STEADY

MOTOR MFG.:_____

FURN. BY:_____ MTD. BY:_____

HP: .5 RPM:_____ VOLTS/PHASE/Hz:_____

ENC.:_____ INSUL.:_____ LUBE:_____

FRAME:_____ FULL LOAD AMPS:_____ STARTING AMPS:_____

GENERAL INFORMATION

WEIGHT: 100 LBS DIMENSION PRINT NO.:_____

REMARKS: *FOR BATCH OPERATIONS
**A MOTOR HOUSING WITH AGITATOR SHAFT CONNECTED TO A DISPOSABLE PROPELLER

9413227.0788

UNITED ENGINEERS & CONSTRUCTORS A Raytheon Company Western Operations	EQUIPMENT DATA SHEET ☒ CDR ☐ TITLE I ☐ TITLE II ☐ TITLE III	ITEM NUMBER M-05-403	PAGE 1 OF 1

CUSTOMER & LOCATION	PROJECT	UE&C JOB NO. 6237.006	DATE: 04/20/92
DOE-RL/WHC HANFORD, WA	WRAP FACILITY MODULE 2A	ACCOUNT NO.	BY: RLH

REVISIONS (DATE & BY)	A	04/29/92	RLH	B		C		D	
	E			F		G		H	

SERVICE	MANUFACTURER	NO. REQ'D.	SOURCE OF QUOTE
VIBRATORY MIXER		1	

CONDITIONS OF SERVICE

MIXING REQUIREMENTS:

FLUID 1: MIXED POLYMER
30 WT% OF TOTAL
SPECIFIC GRAVITY: 1.03
VISCOSITY: 130 CP
TEMPERATURE: 60°F

FLUID 2: SHREDDED/BULK WASTE
70 WT% OF TOTAL

BATCH REQUIREMENTS:

MIX 50 GALLONS* IN 15 MINUTES
CONTAINER SIZE: 55 GALLON DRUM - 23.5 DIA X 35" HIGH
MAXIMUM CONTAINER CONTENTS WT: 1,000 LBS

NOTES: * - 90 PERCENT FULL MAXIMUM
WEIGHT: 500 LBS

9413227.0789

UNITED ENGINEERS & CONSTRUCTORS A Raytheon Company Western Operations	EQUIPMENT DATA SHEET ☒ CDR ☐ TITLE I ☐ TITLE II ☐ TITLE III	ITEM NUMBER M-05-404	PAGE 1 OF 1

CUSTOMER & LOCATION	PROJECT	UE&C JOB NO. 6237.006	DATE: 04/21/92
DOE-RL/WHC HANFORD, WA	WRAP FACILITY MODULE 2A	ACCOUNT NO.	BY: RLH

REVISIONS (DATE & BY)	A	04/29/92	RLH	B		C		D	
	E			F		G		H	

SERVICE	MANUFACTURER	NO. REQ'D.	SOURCE OF QUOTE
IN-LINE MIXER		1	

CONDITIONS OF SERVICE

MIXING REQUIREMENTS:

FLUID 1: MIXED POLYMER

FLOW RATE:	5 GPM
SPECIFIC GRAVITY:	1.03
VISCOSITY:	130 CP
TEMPERATURE:	60°F
PRESSURE:	100 PSIG

FLUID 2: CATALYST (HYDROGEN PEROXIDE 35 WT %)

FLOW RATE:	0.24 LBS/MIN
SPECIFIC GRAVITY:	1.13
VISOCITY:	1.11 CP
TEMPERATURE:	60°F
PRESSURE:	50 PSIG
MAXIMUM ΔP ALLOWED:	40 PSI

MIXING ELEMENTS:

STATIC MIXING ELEMENTS IN 1.5" DIA X 22" PIPE SECTION
REMOVABLE FOR SOLVENT CLEANING
STAINLESS STEEL CONSTRUCTION

NOTES: * - THREE SETS OF REMOVABLE MIXING ELEMENTS REQUIRED PER UNIT
WEIGHT: 100 LBS

9413227.0790

UNITED ENGINEERS & CONSTRUCTORS A Raytheon Company Western Operations	EQUIPMENT DATA SHEET ☒ CDR ☐ TITLE I ☐ TITLE II ☐ TITLE III	ITEM NUMBER M-05-405	PAGE 1 OF 1

CUSTOMER & LOCATION	PROJECT	UE&C JOB NO. 6237.006	DATE: 04/21/92
DOE-RL/WHC HANFORD, WA	WRAP FACILITY MODULE 2A	ACCOUNT NO.	BY: RLH

REVISIONS (DATE & BY)	A	04/29/92	RLH	B		C		D	
	E			F		G		H	

SERVICE	MANUFACTURER	NO. REQ'D.	SOURCE OF QUOTE
IN-LINE MIXER		1	

CONDITIONS OF SERVICE

MIXING REQUIREMENTS:

FLUID 1: MIXED POLYMER

FLOW RATE:	5 GPM
SPECIFIC GRAVITY:	1.03
VISCOSITY:	130 CP
TEMPERATURE:	60°F
PRESSURE:	100 PSIG

FLUID 2: CATALYST (HYDROGEN PEROXIDE, 35 WT %)

FLOW RATE:	0.24 LBS/MIN
SPECIFIC GRAVITY:	1.13
VISCOSITY:	1.11 CP
TEMPERATURE:	60°F
PRESSURE:	50 PSIG
MAXIMUM ΔP ALLOWED:	40 PSI

MIXING ELEMENTS:

STATIC MIXING ELEMENTS IN 1.5" DIA X 22" PIPE SECTION
REMOVABLE FOR SOLVENT CLEANING
STAINLESS STEEL CONSTRUCTION

NOTES: * - THREE SETS OF REMOVABLE MIXING ELEMENTS REQUIRED PER UNIT
WEIGHT: 100 LBS

9413227.0791

UNITED ENGINEERS & CONSTRUCTORS A Raytheon Company Western Operations	EQUIPMENT DATA SHEET ☒ CDR ☐ TITLE I ☐ TITLE II ☐ TITLE III	ITEM NUMBER M-05-406	PAGE 1 OF 1

CUSTOMER & LOCATION	PROJECT	UE&C JOB NO. 6237.006	DATE: 04/21/92
DOE-RL/WHC HANFORD, WA	WRAP FACILITY MODULE 2A	ACCOUNT NO.	BY: RLH

REVISIONS (DATE & BY)	A	04/29/92	RLH	B		C		D	
	E			F		G		H	

SERVICE	MANUFACTURER	NO. REQ'D.	SOURCE OF QUOTE
IN-LINE MIXER		1	

CONDITIONS OF SERVICE

MIXING REQUIREMENTS:

FLUID 1: MIXED POLYMER

FLOW RATE:	5 GPM
SPECIFIC GRAVITY:	1.03
VISCOSITY:	130 CP
TEMPERATURE:	60°F
PRESSURE:	100 PSIG

FLUID 2: CATALYST (HYDROGEN PEROXIDE, 35 WT %)

FLOW RATE:	0.24 LBS/MIN
SPECIFIC GRAVITY:	1.13
VISOCITY:	1.11 CP
TEMPERATURE:	60°F
PRESSURE:	50 PSIG
MAXIMUM ΔP ALLOWED:	40 PSI

MIXING ELEMENTS:

STATIC MIXING ELEMENTS IN 1.5" DIA X 22" PIPE SECTION
REMOVABLE FOR SOLVENT CLEANING
STAINLESS STEEL CONSTRUCTION

NOTES: * - THREE SETS OF REMOVABLE MIXING ELEMENTS REQUIRED PER UNIT
WEIGHT: 100 LBS

9413227.0792

UNITED ENGINEERS & CONSTRUCTORS A Raytheon Company Western Operations	EQUIPMENT DATA SHEET ☒ CDR ☐ TITLE I ☐ TITLE II ☐ TITLE III	ITEM NUMBER M-05-407	PAGE 1 OF 1

CUSTOMER & LOCATION	PROJECT	UE&C JOB NO. 6237.006	DATE: 04/21/92
DOE-RL/WHC HANFORD, WA	WRAP FACILITY MODULE 2A	ACCOUNT NO.	BY: RLH

REVISIONS (DATE & BY)	A	04/29/92	RLH	B		C		D	
	E			F		G		H	

SERVICE	MANUFACTURER	NO. REQ'D.	SOURCE OF QUOTE
IN-LINE MIXER		1	

CONDITIONS OF SERVICE

MIXING REQUIREMENTS:

FLUID 1: MIXED POLYMER

FLOW RATE:	5 GPM
SPECIFIC GRAVITY:	1.03
VISCOSITY:	130 CP
TEMPERATURE:	60°F
PRESSURE:	100 PSIG

FLUID 2: CATALYST (HYDROGEN PEROXIDE, 35 WT %)

FLOW RATE:	0.24 LBS/MIN
SPECIFIC GRAVITY:	1.13
VISOCITY:	1.11 CP
TEMPERATURE:	60°F
PRESSURE:	50 PSIG
MAXIMUM ΔP ALLOWED:	40 PSI

MIXING ELEMENTS:

STATIC MIXING ELEMENTS IN 1.5" DIA X 22" PIPE SECTION
REMOVABLE FOR SOLVENT CLEANING
STAINLESS STEEL CONSTRUCTION

NOTES: * - THREE SETS OF REMOVABLE MIXING ELEMENTS REQUIRED PER UNIT
WEIGHT: 100 LBS

9413227.0793

UNITED ENGINEERS & CONSTRUCTORS A Raytheon Company Western Operations	EQUIPMENT DATA SHEET ☒ CDR ☐ TITLE I ☐ TITLE II ☐ TITLE III	ITEM NUMBER M-05-408	PAGE 1 OF 1

CUSTOMER & LOCATION	PROJECT	UE&C JOB NO.	DATE: 04/10/92
DOE-RL/WHC HANFORD, WA	WRAP FACILITY MODULE 2A	6237.006 ACCOUNT NO.	BY: RLH

REVISIONS (DATE & BY)	A	04/17/92	RLH	B		C		D	
	E			F		G		H	

SERVICE	MANUFACTURER	NO. REQ'D	SOURCE OF QUOTE
IN-DRUM MIXER		1**(A)	

PHYSICAL PROPERTIES OF MATERIALS

COMPONENT	FLOW RATE	WT. % *	S. G.	VIS. (CP)	TEMP.	
MIXED POLY		40	1.03	130	60	
WASTE		60				
TOTAL		100				

MIXTURE: S.G.____ VIS.____ CP

SOLID PROPERTIES: ☐ SOLUBLE ☐ INSOLUBLE ☐ ABRASIVE

OPERATING CONDITIONS

OPERATING PRESS. 0 PSIG TEMP. 60°F

LEVEL IN TANK

CLASS OF OPERATION: ☐ HEAT TRANSFER ☐ DISSOLVING ☐ BLENDING MISCIBLE SOLIDS ☐ GAS DISPERSION ☐ BLENDING MISCIBLE LIQUIDS ☐ DISPENSING INSOLUBLE LIQUIDS ☒ SUSPENDING SOLIDS

MIXING CYCLE: ☐ CONTINUOUS TOTAL FLOW RATE____ GPM

☐ BATCH DESIGNED TO MIX 50 GAL IN 15 MINUTES

VESSEL DETAILS

SIZE: 26" DIA TYPE: 55 GAL DRUM

TOP: ☒ OPEN ☐ CLOSED BOTTOM: ☐ FLAT ☐ CONE ☐ ROUND

MATERIAL OF CONSTRUCTION: CARBON STEEL W/PE LINING

ENTRANCE: ☒ TOP ☐ SIDE

NOZZLE: SIZE & RATING:_____ MAT.:_____

DESIGN PRESS.:_____ PSIG TEMP._____

☐ COILS ☐ BAFFLES SKETCH NO.:_____

MIXER DETAILS

☐ IMPELLER ☐ TURBINE ** ☒ PROPELLER

NO. OF IMPELLERS: 1 SIZE: 15" DIA BLADES EA.: 3

IMPELLER RPM: 400 BHP:_____ MAT.:_____

BLADES: ☐ FIXED ☒ REMOVABLE ☐ FLAT

☐ UP THRUST ☐ DOWN THRUST ☐ STABILIZER REQ'D.

SHAFT: DIAM.:_____ LENGTH:_____

MAT.:_____ CRITICAL SPEED:_____ RPM

SEALING REQUIREMENTS: ☐ PACKING TYPE:_____

☐ MECH. SEAL MFG. ☐ MODEL:_____

☐ CARTRIDGE ☐ DOUBLE ☐ SINGLE

MOUNTING: ☐ NOZZLE ☐ CLAMP ☐ BEAM

DRIVE DETAILS

☐ GEAR REDUCER:

TYPE:_____ RATIO:_____ LUBE:_____

AGMA CLASS:_____ SERVICE FACTOR:_____

COUPLINGS: MFG. & MODEL:_____

H.S. SHAFT: ☐ FLEXIBLE ☐ RIGID RPM:_____

L.S. SHAFT: ☐ FLEXIBLE ☐ RIGID RPM:_____

BEARINGS: ☐ RADIAL ☐ THRUST ☐ STEADY

MOTOR MFG.:_____

FURN. BY:_____ MTD. BY:_____

HP:_____ RPM:_____ VOLTS/PHASE/H_z:_____

ENC.:_____ INSUL.:_____ LUBE:_____

FRAME:_____ FULL LOAD AMPS:_____ STARTING AMPS:_____

GENERAL INFORMATION

WEIGHT: 50 LBS DIMENSION PRINT NO.:_____

REMARKS:
*FOR BATCH OPERATIONS
**A MOTOR HOUSING WITH AGITATOR SHAFT CONNECTED TO A DISPOSABLE PROPELLER

9413227.0794

UNITED ENGINEERS & CONSTRUCTORS A Raytheon Company Western Operations	EQUIPMENT DATA SHEET ☒ CDR ☐ TITLE I ☐ TITLE II ☐ TITLE III	ITEM NUMBER M-05-409	PAGE 1 OF 1
CUSTOMER & LOCATION DOE-RL/WHC HANFORD, WA	PROJECT WRAP FACILITY MODULE 2A	UE&C JOB NO. 6237.006 / ACCOUNT NO.	DATE: 04/10/92 / BY: RLH

REVISIONS (DATE & BY)	A	04/17/92	RLH	B		C		D	
	E			F		G		H	

SERVICE	MANUFACTURER	NO. REQ'D	SOURCE OF QUOTE
IN-DRUM MIXER		1**(A)	

PHYSICAL PROPERTIES OF MATERIALS

COMPONENT	FLOW RATE	WT. % *	S. G.	VIS. (CP)	TEMP.	
MIXED POLY		40	1.03	130	60	
WASTE		60				
TOTAL		100				

MIXTURE: S.G.____ VIS.____ CP

SOLID PROPERTIES: ☐ SOLUBLE ☐ INSOLUBLE ☐ ABRASIVE

OPERATING CONDITIONS

OPERATING PRESS. 0 PSIG TEMP. 60°F

LEVEL IN TANK

CLASS OF OPERATION: ☐ HEAT TRANSFER ☐ DISSOLVING ☐ BLENDING MISCIBLE SOLIDS ☐ GAS DISPERSION ☐ BLENDING MISCIBLE LIQUIDS ☐ DISPENSING INSOLUBLE LIQUIDS ☒ SUSPENDING SOLIDS

MIXING CYCLE: ☐ CONTINUOUS TOTAL FLOW RATE____ GPM

☐ BATCH DESIGNED TO MIX 50 GAL IN 15 MINUTES

VESSEL DETAILS

SIZE: 26" DIA TYPE: 55 GAL DRUM

TOP: ☒ OPEN ☐ CLOSED BOTTOM: ☐ FLAT ☐ CONE ☐ ROUND

MATERIAL OF CONSTRUCTION: CARBON STEEL W/PE LINING

ENTRANCE: ☒ TOP ☐ SIDE

NOZZLE: SIZE & RATING:_____ MAT.:_____

DESIGN PRESS.:_____ PSIG TEMP._____

☐ COILS ☐ BAFFLES SKETCH NO.:

MIXER DETAILS

☐ IMPELLER ☐ TURBINE ** ☒ PROPELLER

NO. OF IMPELLERS: 1 SIZE: 15" DIA BLADES EA.: 3

IMPELLER RPM: 400 BHP:_____ MAT.:_____

BLADES: ☐ FIXED ☒ REMOVABLE ☐ FLAT

☐ UP THRUST ☐ DOWN THRUST ☐ STABILIZER REQ'D.

SHAFT: DIAM.:_____ LENGTH:_____

MAT.:_____ CRITICAL SPEED:_____ RPM

SEALING REQUIREMENTS: ☐ PACKING TYPE:_____

☐ MECH. SEAL MFG. ☐ MODEL:_____

☐ CARTRIDGE ☐ DOUBLE ☐ SINGLE

MOUNTING: ☐ NOZZLE ☐ CLAMP ☐ BEAM

DRIVE DETAILS

☐ GEAR REDUCER:

TYPE:_____ RATIO:_____ LUBE:_____

AGMA CLASS:_____ SERVICE FACTOR:_____

COUPLINGS: MFG. & MODEL:_____

H.S. SHAFT: ☐ FLEXIBLE ☐ RIGID RPM:_____

L.S. SHAFT: ☐ FLEXIBLE ☐ RIGID RPM:_____

BEARINGS: ☐ RADIAL ☐ THRUST ☐ STEADY

MOTOR MFG.:_____

FURN. BY:_____ MTD. BY:_____

HP:_____ RPM:_____ VOLTS/PHASE/H_Z:_____

ENC.:_____ INSUL.:_____ LUBE:_____

FRAME:_____ FULL LOAD AMPS:_____ STARTING AMPS:_____

GENERAL INFORMATION

WEIGHT: 50 LBS DIMENSION PRINT NO.:_____

REMARKS: *FOR BATCH OPERATIONS

**A MOTOR HOUSING WITH AGITATOR SHAFT CONNECTED TO A DISPOSABLE PROPELLER

9413227.0795

UNITED ENGINEERS & CONSTRUCTORS A Raytheon Company Western Operations	EQUIPMENT DATA SHEET ☒ CDR ☐ TITLE I ☐ TITLE II ☐ TITLE III	ITEM NUMBER M-05-410	PAGE 1 OF 1
CUSTOMER & LOCATION: DOE-RL/WHC HANFORD, WA	PROJECT: WRAP FACILITY MODULE 2A	UE&C JOB NO. 6237.006 / ACCOUNT NO.	DATE: 04/10/92 / BY: RLH

REVISIONS (DATE & BY)	A	04/17/92	RLH	B		C		D	
	E			F		G		H	

SERVICE	MANUFACTURER	NO. REQ'D	SOURCE OF QUOTE
IN-DRUM MIXER		1**(A)	

PHYSICAL PROPERTIES OF MATERIALS

COMPONENT	FLOW RATE	WT. % *	S. G.	VIS. (CP)	TEMP.	
MIXED POLY		40	1.03	130	60	
WASTE		60				
TOTAL		100				

MIXTURE: S.G.____ VIS.____ CP

SOLID PROPERTIES: ☐ SOLUBLE ☐ INSOLUBLE ☐ ABRASIVE

OPERATING CONDITIONS

OPERATING PRESS. 0 PSIG TEMP. 60°F

LEVEL IN TANK

CLASS OF OPERATION: ☐ HEAT TRANSFER ☐ DISSOLVING ☐ BLENDING MISCIBLE SOLIDS ☐ GAS DISPERSION ☐ BLENDING MISCIBLE LIQUIDS ☐ DISPENSING INSOLUBLE LIQUIDS ☒ SUSPENDING SOLIDS

MIXING CYCLE: ☐ CONTINUOUS TOTAL FLOW RATE____ GPM

☐ BATCH DESIGNED TO MIX 50 GAL IN 15 MINUTES

VESSEL DETAILS

SIZE: 26" DIA TYPE: 55 GAL DRUM

TOP: ☒ OPEN ☐ CLOSED BOTTOM: ☐ FLAT ☐ CONE ☐ ROUND

MATERIAL OF CONSTRUCTION: CARBON STEEL W/PE LINING

ENTRANCE: ☒ TOP ☐ SIDE

NOZZLE: SIZE & RATING:_____ MAT.:_____

DESIGN PRESS.:_____ PSIG TEMP._____

☐ COILS ☐ BAFFLES SKETCH NO.:

MIXER DETAILS

☐ IMPELLER ☐ TURBINE ** ☒ PROPELLER

NO. OF IMPELLERS: 1 SIZE: 15" DIA BLADES EA.: 3

IMPELLER RPM: 400 BHP:_____ MAT.:_____

BLADES: ☐ FIXED____ ☒ REMOVABLE ☐ FLAT

☐ UP THRUST ☐ DOWN THRUST ☐ STABILIZER REQ'D.

SHAFT: DIAM.:_____ LENGTH:_____

MAT.:_____ CRITICAL SPEED:_____ RPM

SEALING REQUIREMENTS: ☐ PACKING TYPE:_____

☐ MECH. SEAL MFG. ☐ MODEL:_____

☐ CARTRIDGE ☐ DOUBLE ☐ SINGLE

MOUNTING: ☐ NOZZLE ☐ CLAMP ☐ BEAM

DRIVE DETAILS

☐ GEAR REDUCER:

TYPE:_____ RATIO:_____ LUBE:_____

AGMA CLASS:_____ SERVICE FACTOR:_____

COUPLINGS: MFG. & MODEL:_____

H.S. SHAFT: ☐ FLEXIBLE ☐ RIGID RPM:_____

L.S. SHAFT: ☐ FLEXIBLE ☐ RIGID RPM:_____

BEARINGS: ☐ RADIAL ☐ THRUST ☐ STEADY

MOTOR MFG.:_____

FURN. BY:_____ MTD. BY:_____

HP:_____ RPM:_____ VOLTS/PHASE/H_Z:_____

ENC.:_____ INSUL.:_____ LUBE:_____

FRAME:_____ FULL LOAD AMPS:_____ STARTING AMPS:_____

GENERAL INFORMATION

WEIGHT: 50 LBS DIMENSION PRINT NO.:_____

REMARKS: *FOR BATCH OPERATIONS
**A MOTOR HOUSING WITH AGITATOR SHAFT CONNECTED TO A DISPOSABLE PROPELLER

UNITED ENGINEERS & CONSTRUCTORS A Raytheon Company Western Operations	EQUIPMENT DATA SHEET ☒ CDR ☐ TITLE I ☐ TITLE II ☐ TITLE III	ITEM NUMBER M-05-411	PAGE 1 OF 1
CUSTOMER & LOCATION DOE-RL/WHC HANFORD, WA	PROJECT WRAP FACILITY MODULE 2A	UE&C JOB NO. 6237.006 ACCOUNT NO.	DATE: 04/20/92 BY: RLH

REVISIONS (DATE & BY)	A	04/29/92	RLH	B		C		D	
	E			F		G		H	

SERVICE	MANUFACTURER	NO. REQ'D.	SOURCE OF QUOTE
VIBRATORY MIXER		1	

CONDITIONS OF SERVICE

MIXING REQUIREMENTS:

FLUID 1: MIXED POLYMER
30 WT% OF TOTAL
SPECIFIC GRAVITY: 1.03
VISCOSITY: 130 CP
TEMPERATURE: 60°F

FLUID 2: SHREDDED/BULK WASTE
70 WT% OF TOTAL

BATCH REQUIREMENTS:

MIX 50 GALLONS* IN 15 MINUTES
CONTAINER SIZE: 55 GALLON DRUM - 23.5 DIA X 35" HIGH
MAXIMUM CONTAINER CONTENTS WT: 1,000 LBS

NOTES: * - 90 PERCENT FULL MAXIMUM
WEIGHT: 500 LBS

9413227.0797

UNITED ENGINEERS & CONSTRUCTORS A Raytheon Company Western Operations	EQUIPMENT DATA SHEET ☒ CDR ☐ TITLE I ☐ TITLE II ☐ TITLE III	ITEM NUMBER M-05-412	PAGE 1 OF 1

CUSTOMER & LOCATION	PROJECT	UE&C JOB NO. 6237.006	DATE: 04/20/92
DOE-RL/WHC HANFORD, WA	WRAP FACILITY MODULE 2A	ACCOUNT NO.	BY: RLH

REVISIONS (DATE & BY)	A	04/29/92	RLH	B		C		D	
	E			F		G		H	

SERVICE	MANUFACTURER	NO. REQ'D.	SOURCE OF QUOTE
VIBRATORY MIXER		1	

CONDITIONS OF SERVICE

MIXING REQUIREMENTS:

FLUID 1: MIXED POLYMER
30 WT% OF TOTAL
SPECIFIC GRAVITY: 1.03
VISCOSITY: 130 CP
TEMPERATURE: 60°F

FLUID 2: SHREDDED/BULK WASTE
70 WT% OF TOTAL

BATCH REQUIREMENTS:

MIX 50 GALLONS* IN 15 MINUTES
CONTAINER SIZE: 55 GALLON DRUM - 23.5 DIA X 35" HIGH
MAXIMUM CONTAINER CONTENTS WT: 1,000 LBS

NOTES: * - 90 PERCENT FULL MAXIMUM
WEIGHT: 500 LBS

UNITED ENGINEERS & CONSTRUCTORS A Raytheon Company Western Operations	EQUIPMENT DATA SHEET ☒ CDR ☐ TITLE I ☐ TITLE II ☐ TITLE III	ITEM NUMBER M-05-413	PAGE 1 OF 1

CUSTOMER & LOCATION	PROJECT	UE&C JOB NO. 6237.006	DATE: 04/20/92
DOE-RL/WHC HANFORD, WA	WRAP FACILITY MODULE 2A	ACCOUNT NO.	BY: RLH

REVISIONS (DATE & BY)	A	04/29/92	RLH	B		C		D	
	E			F		G		H	

SERVICE	MANUFACTURER	NO. REQ'D.	SOURCE OF QUOTE
VIBRATORY MIXER		1	

CONDITIONS OF SERVICE

MIXING REQUIREMENTS:

FLUID 1: MIXED POLYMER
30 WT% OF TOTAL
SPECIFIC GRAVITY: 1.03
VISCOSITY: 130 CP
TEMPERATURE: 60°F

FLUID 2: SHREDDED/BULK WASTE
70 WT% OF TOTAL

BATCH REQUIREMENTS:

MIX 50 GALLONS* IN 15 MINUTES
CONTAINER SIZE: 55 GALLON DRUM - 23.5 DIA X 35" HIGH
MAXIMUM CONTAINER CONTENTS WT: 1,000 LBS

NOTES: * - 90 PERCENT FULL MAXIMUM
WEIGHT: 500 LBS

9413227.0799

UNITED ENGINEERS & CONSTRUCTORS A Raytheon Company Western Operations	EQUIPMENT DATA SHEET ☒ CDR ☐ TITLE I ☐ TITLE II ☐ TITLE III	ITEM NUMBER M-05-203	PAGE 1 OF 1
CUSTOMER & LOCATION DOE-RL/WHC HANFORD, WA	PROJECT WRAP FACILITY MODULE 2A	UE&C JOB NO. 6237.006 / ACCOUNT NO.	DATE: 05/22/92 / BY: JPJ

REVISIONS (DATE & BY)	A		B		C		D	
	E		F		G		H	

SERVICE	MANUFACTURER	NO. REQ'D	SOURCE OF QUOTE
GROUT/WASTE DRUM MIXER		1	

PHYSICAL PROPERTIES OF MATERIALS

COMPONENT	FLOW RATE	WT. % *	S. G.	VIS. (CP)	TEMP.	
OPC						
BFS						
PFA						
H_2O						
WASTE						

MIXTURE: S.G. 1.5 VIS. ____ CP

SOLID PROPERTIES: ☐ SOLUBLE ☒ INSOLUBLE ☒ ABRASIVE

OPERATING CONDITIONS

OPERATING PRESS. ATMOS PSIG TEMP. AMBIENT

LEVEL IN TANK ____

CLASS OF OPERATION: ☐ HEAT TRANSFER ☐ DISSOLVING ☒ BLENDING MISCIBLE SOLIDS ☐ GAS DISPERSION ☐ BLENDING MISCIBLE LIQUIDS ☐ DISPENSING INSOLUBLE LIQUIDS ☐ SUSPENDING SOLIDS

MIXING CYCLE: ☐ CONTINUOUS TOTAL FLOW RATE ____ GPM

☒ BATCH DESIGNED TO MIX ____ IN ____ MINUTES

VESSEL DETAILS

SIZE: 55 GAL TYPE: DRUM

TOP: ☒ OPEN ☐ CLOSED BOTTOM: ☒ FLAT ☐ CONE ☐ ROUND

MATERIAL OF CONSTRUCTION: MILD STEEL

ENTRANCE: ☒ TOP ☐ SIDE

NOZZLE: SIZE & RATING: ____ MAT.: ____

DESIGN PRESS.: ATMOS PSIG TEMP. AMBIENT

☐ COILS ☐ BAFFLES SKETCH NO.: ____

MIXER DETAILS

☐ IMPELLER ☐ TURBINE ☐ PROPELLER

NO. OF IMPELLERS: ____ SIZE: ____ BLADES EA.: ____

IMPELLER RPM: ____ BHP: 1 MAT.: ____

BLADES: ☐ FIXED ☐ REMOVABLE ☐ FLAT

☒ UP THRUST ☐ DOWN THRUST ☐ STABILIZER REQ'D.

SHAFT: DIAM.: ____ LENGTH: ____

MAT.: ____ CRITICAL SPEED: ____ RPM

SEALING REQUIREMENTS: ☐ PACKING TYPE: ____

☐ MECH. SEAL MFG. ☐ MODEL: ____

☐ CARTRIDGE ☐ DOUBLE ☐ SINGLE

MOUNTING: ☐ NOZZLE ☐ CLAMP ☐ BEAM

DRIVE DETAILS

☐ GEAR REDUCER:

TYPE: ____ RATIO: ____ LUBE: ____

AGMA CLASS: ____ SERVICE FACTOR: 1.25

COUPLINGS: MFG. & MODEL: ____

H.S. SHAFT: ☐ FLEXIBLE ☐ RIGID RPM: ____

L.S. SHAFT: ☐ FLEXIBLE ☐ RIGID RPM: ____

BEARINGS: ☐ RADIAL ☐ THRUST ☐ STEADY

MOTOR MFG.: ____

FURN. BY: ____ MTD. BY: ____

HP: ____ RPM: ____ VOLTS/PHASE/H_z: 460/3/60

ENC.: ____ INSUL.: ____ LUBE: ____

FRAME: ____ FULL LOAD AMPS: ____ STARTING AMPS: ____

GENERAL INFORMATION

WEIGHT: ____ DIMENSION PRINT NO.: ____

REMARKS: *FOR BATCH OPERATIONS
MIXER TO BE SPECIAL LOST PADDLE TYPE. (MIXING PADDLE WILL REMAIN IN THE DRUM AFTER MIXING IS COMPLETED.) MIXER MOTOR TO BE INSTANTLY RELEASABLE FROM MIXER PADDLE.

UNITED ENGINEERS & CONSTRUCTORS A Raytheon Company Western Operations	EQUIPMENT DATA SHEET ☒ CDR ☐ TITLE I ☐ TITLE II ☐ TITLE III	ITEM NUMBER M-07-101A,B	PAGE 1 OF 1

CUSTOMER & LOCATION	PROJECT	UE&C JOB NO. 6237.006	DATE: 04/17/92
DOE-RL/WHC HANFORD, WA	WRAP FACILITY MODULE 2A	ACCOUNT NO.	BY: TPS

REVISIONS (DATE & BY)	A		B		C		D	
	E		F		G		H	

SERVICE	MANUFACTURER	NO. REQ'D	SOURCE OF QUOTE
NONACTIVE WASTE TANK MIXERS		2	

PHYSICAL PROPERTIES OF MATERIALS

COMPONENT	FLOW RATE	WT. % *	S. G.	VIS. (CP)	TEMP.	
WASTEWATE		100%	1.0	1.13	60	
CAUSTIC		TRACE	1.06	0.9	60	
SULFUR ACID		TRACE	1.02	06	60	

MIXTURE: S.G. 1.0 VIS. 1.13 CP

SOLID PROPERTIES: ☐ SOLUBLE ☐ INSOLUBLE ☐ ABRASIVE

OPERATING CONDITIONS

OPERATING PRESS. ATM PSIG TEMP. 60°F
LEVEL IN TANK 4.5'
CLASS OF OPERATION: ☐ HEAT TRANSFER ☐ DISSOLVING
☒ BLENDING MISCIBLE SOLIDS ☐ GAS DISPERSION
☐ BLENDING MISCIBLE LIQUIDS
☐ DISPENSING INSOLUBLE LIQUIDS ☒ SUSPENDING SOLIDS
MIXING CYCLE: ☐ CONTINUOUS TOTAL FLOW RATE ____ GPM
☒ BATCH DESIGNED TO MIX 500 GAL IN 20 MINUTES

VESSEL DETAILS

SIZE: 4' DIA X 5.5' HIGH - (500 GAL) TYPE: ____
TOP: ☐ OPEN ☒ CLOSED BOTTOM: ☐ FLAT ☐ CONE ☒ ROUND
MATERIAL OF CONSTRUCTION: STAINLESS STEEL
ENTRANCE: ☒ TOP ☐ SIDE
NOZZLE: SIZE & RATING: 6" - 150 - FF MAT.: SS
DESIGN PRESS.: ATM PSIG TEMP. 60
☐ COILS ☐ BAFFLES SKETCH NO.: ____

MIXER DETAILS

☒ IMPELLER ☐ TURBINE ☐ PROPELLER
NO. OF IMPELLERS: 1 SIZE: ____ BLADES EA.: ____
IMPELLER RPM: ____ BHP: .5 MAT.: ____
BLADES: ☒ FIXED ☒ REMOVABLE ☐ FLAT
☐ UP THRUST ☐ DOWN THRUST ☐ STABILIZER REQ'D.
SHAFT: DIAM.: ____ LENGTH: ____
MAT.: ____ CRITICAL SPEED: ____ RPM
SEALING REQUIREMENTS: ☐ PACKING TYPE: ____
☐ MECH. SEAL MFG. ☐ MODEL: ____
☐ CARTRIDGE ☐ DOUBLE ☐ SINGLE
MOUNTING: ☐ NOZZLE ☐ CLAMP ☐ BEAM

DRIVE DETAILS

☐ GEAR REDUCER:
TYPE: ____ RATIO: ____ LUBE: ____
AGMA CLASS: ____ SERVICE FACTOR: ____
COUPLINGS: MFG. & MODEL: ____
H.S. SHAFT: ☐ FLEXIBLE ☐ RIGID RPM: ____
L.S. SHAFT: ☐ FLEXIBLE ☐ RIGID RPM: ____
BEARINGS: ☐ RADIAL ☐ THRUST ☐ STEADY
MOTOR MFG.: ____
FURN. BY: ____ MTD. BY: ____
HP: .5 RPM: ____ VOLTS/PHASE/H_Z: 120/1/60
ENC.: ____ INSUL.: ____ LUBE: ____
FRAME: ____ FULL LOAD AMPS: ____ STARTING AMPS: ____

GENERAL INFORMATION

WEIGHT: 80 LBS DIMENSION PRINT NO.: ____

REMARKS: *FOR BATCH OPERATIONS

9413227.0801

UNITED ENGINEERS & CONSTRUCTORS A Raytheon Company Western Operations	EQUIPMENT DATA SHEET ☒ CDR ☐ TITLE I ☐ TITLE II ☐ TITLE III	ITEM NUMBER M-07-201	PAGE 1 OF 1

CUSTOMER & LOCATION	PROJECT	UE&C JOB NO. 6237.006	DATE: 04/13/92
DOE-RL/WHC HANFORD, WA	WRAP FACILITY MODULE 2A	ACCOUNT NO.	BY: TPS

REVISIONS (DATE & BY)	A		B		C		D	
	E		F		G		H	

SERVICE	MANUFACTURER	NO. REQ'D	SOURCE OF QUOTE
TREATED ACTIVE WASTE TANK MIXER		1	

PHYSICAL PROPERTIES OF MATERIALS

COMPONENT	FLOW RATE	WT. % *	S. G.	VIS. (CP)	TEMP.	
WATER		100%	1.0	1.13	60	
H_2SO_4 (1%)		TRACE	1.006	0.5	60	
NaOH (1%)		TRACE	1.012	1.13	10	

MIXTURE: S.G. 1.0 VIS. 1.13 CP

SOLID PROPERTIES: ☐ SOLUBLE ☒ INSOLUBLE ☐ ABRASIVE

OPERATING CONDITIONS

*OPERATING PRESS. 0 PSIG TEMP. 60

LEVEL IN TANK 7'

CLASS OF OPERATION: ☐ HEAT TRANSFER ☐ DISSOLVING ☐ BLENDING MISCIBLE SOLIDS ☐ GAS DISPERSION ☒ BLENDING MISCIBLE LIQUIDS ☐ DISPENSING INSOLUBLE LIQUIDS ☐ SUSPENDING SOLIDS

MIXING CYCLE: ☐ CONTINUOUS TOTAL FLOW RATE ____ GPM

☒ BATCH DESIGNED TO MIX 3,000 GAL IN 20 MINUTES

VESSEL DETAILS

SIZE: 8' DIA X 8' SS TYPE: VERTICAL

TOP: ☐ OPEN ☒ CLOSED BOTTOM: ☐ FLAT ☐ CONE ☒ ROUND

MATERIAL OF CONSTRUCTION: ____

ENTRANCE: ☒ TOP ☐ SIDE

NOZZLE: SIZE & RATING: 8"-150#-FF MAT.: ____

DESIGN PRESS.: 0 PSIG TEMP. 60

☐ COILS ☐ BAFFLES SKETCH NO.: ____

MIXER DETAILS

☒ IMPELLER ☐ TURBINE ☐ PROPELLER

NO. OF IMPELLERS: 1 SIZE: ____ BLADES EA.: ____

IMPELLER RPM: ____ BHP: ____ MAT.: ____

BLADES: ☐ FIXED ☐ REMOVABLE ☐ FLAT

☐ UP THRUST ☐ DOWN THRUST ☐ STABILIZER REQ'D.

SHAFT: DIAM.: ____ LENGTH: ____

MAT.: ____ CRITICAL SPEED: ____ RPM

SEALING REQUIREMENTS: ☐ PACKING TYPE: ____

☐ MECH. SEAL MFG. ☐ MODEL: ____

☐ CARTRIDGE ☐ DOUBLE ☐ SINGLE

MOUNTING: ☐ NOZZLE ☐ CLAMP ☐ BEAM

DRIVE DETAILS

☐ GEAR REDUCER:

TYPE: ____ RATIO: ____ LUBE: ____

AGMA CLASS: ____ SERVICE FACTOR: ____

COUPLINGS: MFG. & MODEL: ____

H.S. SHAFT: ☐ FLEXIBLE ☐ RIGID RPM: ____

L.S. SHAFT: ☐ FLEXIBLE ☐ RIGID RPM: ____

BEARINGS: ☐ RADIAL ☐ THRUST ☐ STEADY

MOTOR MFG.: ____

FURN. BY: ____ MTD. BY: ____

HP: 1 RPM: ____ VOLTS/PHASE/H_z: 480/3/60

ENC.: ____ INSUL.: ____ LUBE: ____

FRAME: ____ FULL LOAD AMPS: ____ STARTING AMPS: ____

GENERAL INFORMATION

WEIGHT: 100 LBS DIMENSION PRINT NO.: ____

REMARKS: *FOR BATCH OPERATIONS

UNITED ENGINEERS & CONSTRUCTORS A Raytheon Company Western Operations	EQUIPMENT DATA SHEET ☒ CDR ☐ TITLE I ☐ TITLE II ☐ TITLE III	ITEM NUMBER M-12-101	PAGE 1 OF 1

CUSTOMER & LOCATION	PROJECT	UE&C JOB NO. 6237.006	DATE: 04/17/92
DOE-RL/WHC HANFORD, WA	WRAP FACILITY MODULE 2A	ACCOUNT NO.	BY: TPS

REVISIONS (DATE & BY)	A		B		C		D	
	E		F		G		H	

SERVICE	MANUFACTURER	NO. REQ'D	SOURCE OF QUOTE
ACID TANK MIXER			

PHYSICAL PROPERTIES OF MATERIALS

COMPONENT	FLOW RATE	WT. % *	S. G.	VIS. (CP)	TEMP.	
WATER		95% - 99%	1.0	1.13	60°F	
SULFUR ACID		1% - 5%	1.83	7	60°F	

MIXTURE: S.G. 1.02 VIS. 0.5 CP

SOLID PROPERTIES: ☐ SOLUBLE ☐ INSOLUBLE ☐ ABRASIVE

OPERATING CONDITIONS

OPERATING PRESS. ATM PSIG TEMP. 60°F
LEVEL IN TANK 30"
CLASS OF OPERATION: ☐ HEAT TRANSFER ☐ DISSOLVING
☐ BLENDING MISCIBLE SOLIDS ☐ GAS DISPERSION
☒ BLENDING MISCIBLE LIQUIDS
☐ DISPENSING INSOLUBLE LIQUIDS ☐ SUSPENDING SOLIDS
MIXING CYCLE: ☐ CONTINUOUS TOTAL FLOW RATE ____ GPM
☐ BATCH DESIGNED TO MIX 75 GAL. IN 10 MINUTES

VESSEL DETAILS

SIZE: 75 GAL (27" DIA X 36" HIGH TYPE: ____
TOP: ☒ OPEN ☐ CLOSED BOTTOM: ☒ FLAT ☐ CONE ☐ ROUND
MATERIAL OF CONSTRUCTION: LINED CS
ENTRANCE: ☒ TOP ☐ SIDE
NOZZLE: SIZE & RATING: ____ MAT.: ____
DESIGN PRESS.: ATM PSIG TEMP. 60°F
☐ COILS ☐ BAFFLES SKETCH NO.: ____

MIXER DETAILS

☒ IMPELLER ☐ TURBINE ☐ PROPELLER
NO. OF IMPELLERS: 1 SIZE: ____ BLADES EA.: ____
IMPELLER RPM: 1,750 BHP: ____ MAT.: ____
BLADES: ☐ FIXED ☐ REMOVABLE ☐ FLAT
☐ UP THRUST ☐ DOWN THRUST ☐ STABILIZER REQ'D.
SHAFT: DIAM.: ____ LENGTH: ____
MAT.: ____ CRITICAL SPEED: ____ RPM
SEALING REQUIREMENTS: ☐ PACKING TYPE: ____
☐ MECH. SEAL MFG. ☐ MODEL: ____
☐ CARTRIDGE ☐ DOUBLE ☐ SINGLE
MOUNTING: ☐ NOZZLE ☐ CLAMP ☐ BEAM

DRIVE DETAILS

☐ GEAR REDUCER:
TYPE: ____ RATIO: ____ LUBE: ____
AGMA CLASS: ____ SERVICE FACTOR: ____
COUPLINGS: MFG. & MODEL: ____
H.S. SHAFT: ☐ FLEXIBLE ☐ RIGID RPM: ____
L.S. SHAFT: ☐ FLEXIBLE ☐ RIGID RPM: ____
BEARINGS: ☐ RADIAL ☐ THRUST ☐ STEADY
MOTOR MFG.: ____
FURN. BY: ____ MTD. BY: ____
HP: 1/8 RPM: ____ VOLTS/PHASE/Hz: 120/1/60
ENC.: ____ INSUL.: ____ LUBE: ____
FRAME: ____ FULL LOAD AMPS: ____ STARTING AMPS: ____

GENERAL INFORMATION

WEIGHT: 30 LBS DIMENSION PRINT NO.: ____

REMARKS:
*FOR BATCH OPERATIONS
1. TANK WILL HAVE COVER

9413227.0803

UNITED ENGINEERS & CONSTRUCTORS A Raytheon Company Western Operations	EQUIPMENT DATA SHEET ☒ CDR ☐ TITLE I ☐ TITLE II ☐ TITLE III	ITEM NUMBER M-12-102	PAGE 1 OF 1
CUSTOMER & LOCATION: DOE-RL/WHC HANFORD, WA	PROJECT: WRAP FACILITY MODULE 2A	UE&C JOB NO. 6237.006 / ACCOUNT NO.	DATE: 04/17/92 / BY: TPS

REVISIONS (DATE & BY)	A		B		C		D	
	E		F		G		H	

SERVICE	MANUFACTURER	NO. REQ'D	SOURCE OF QUOTE
CAUSTIC TANK MIXER			

PHYSICAL PROPERTIES OF MATERIALS

COMPONENT	FLOW RATE	WT. % *	S. G.	VIS. (CP)	TEMP.	
WATER		95% - 99%	1.0	1.13	60°F	
CAUSTIC		1% - 5%	1.53	10	60°F	

MIXTURE: S.G. 1.06 VIS. 0.9 CP

SOLID PROPERTIES: ☐ SOLUBLE ☐ INSOLUBLE ☐ ABRASIVE

OPERATING CONDITIONS

OPERATING PRESS. ATM PSIG TEMP. 60°F

LEVEL IN TANK 30"

CLASS OF OPERATION: ☐ HEAT TRANSFER ☐ DISSOLVING ☐ BLENDING MISCIBLE SOLIDS ☐ GAS DISPERSION ☒ BLENDING MISCIBLE LIQUIDS ☐ DISPENSING INSOLUBLE LIQUIDS ☐ SUSPENDING SOLIDS

MIXING CYCLE: ☐ CONTINUOUS TOTAL FLOW RATE ____ GPM

☐ BATCH DESIGNED TO MIX 75 GAL IN 10 MINUTES

VESSEL DETAILS

SIZE: 75 GAL (27" DIA X 36" HIGH) TYPE: ____

TOP: ☒ OPEN ☐ CLOSED BOTTOM: ☒ FLAT ☐ CONE ☐ ROUND

MATERIAL OF CONSTRUCTION: LINED CS

ENTRANCE: ☒ TOP ☐ SIDE

NOZZLE: SIZE & RATING: ____ MAT.: ____

DESIGN PRESS.: ATM PSIG TEMP. 60°F

☐ COILS ☐ BAFFLES SKETCH NO.: ____

MIXER DETAILS

☒ IMPELLER ☐ TURBINE ☐ PROPELLER

NO. OF IMPELLERS: 1 SIZE: ____ BLADES EA.: ____

IMPELLER RPM: ____ BHP: ____ MAT.: ____

BLADES: ☐ FIXED ☐ REMOVABLE ☐ FLAT

☐ UP THRUST ☐ DOWN THRUST ☐ STABILIZER REQ'D.

SHAFT: DIAM.: ____ LENGTH: ____

MAT.: ____ CRITICAL SPEED: ____ RPM

SEALING REQUIREMENTS: ☐ PACKING TYPE: ____

☐ MECH. SEAL MFG. ☐ MODEL: ____

☐ CARTRIDGE ☐ DOUBLE ☐ SINGLE

MOUNTING: ☐ NOZZLE ☐ CLAMP ☐ BEAM

DRIVE DETAILS

☐ GEAR REDUCER:

TYPE: ____ RATIO: ____ LUBE: ____

AGMA CLASS: ____ SERVICE FACTOR: ____

COUPLINGS: MFG. & MODEL: ____

H.S. SHAFT: ☐ FLEXIBLE ☐ RIGID RPM: ____

L.S. SHAFT: ☐ FLEXIBLE ☐ RIGID RPM: ____

BEARINGS: ☐ RADIAL ☐ THRUST ☐ STEADY

MOTOR MFG.: ____

FURN. BY: ____ MTD. BY: ____

HP: 1/8 RPM: ____ VOLTS/PHASE/H_z: 120/1/60

ENC.: ____ INSUL.: ____ LUBE: ____

FRAME: ____ FULL LOAD AMPS: ____ STARTING AMPS: ____

GENERAL INFORMATION

WEIGHT: 30 LBS DIMENSION PRINT NO.: 30 LBS

REMARKS:

*FOR BATCH OPERATIONS

1. TANK WILL HAVE COVER

UNITED ENGINEERS & CONSTRUCTORS A Raytheon Company Western Operations	EQUIPMENT DATA SHEET ☒ CDR ☐ TITLE I ☐ TITLE II ☐ TITLE III	ITEM NUMBER M-12-103	PAGE 1 OF 1
CUSTOMER & LOCATION DOE-RL/WHC HANFORD, WA	PROJECT WRAP FACILITY MODULE 2A	UE&C JOB NO. 6237.006 / ACCOUNT NO.	DATE: 04/17/92 / BY: TPS

REVISIONS (DATE & BY)	A		B		C		D	
	E		F		G		H	

SERVICE	MANUFACTURER	NO. REQ'D	SOURCE OF QUOTE
DECON SOLUTION TANK MIXER			

PHYSICAL PROPERTIES OF MATERIALS

COMPONENT	FLOW RATE	WT. % *	S. G.	VIS. (CP)	TEMP.	
TBD						

MIXTURE: S.G.____ VIS.____ CP

SOLID PROPERTIES: ☐ SOLUBLE ☐ INSOLUBLE ☐ ABRASIVE

OPERATING CONDITIONS

OPERATING PRESS. ATM PSIG TEMP. 60°F

LEVEL IN TANK 30"

CLASS OF OPERATION: ☐ HEAT TRANSFER ☐ DISSOLVING ☐ BLENDING MISCIBLE SOLIDS ☐ GAS DISPERSION ☒ BLENDING MISCIBLE LIQUIDS ☐ DISPENSING INSOLUBLE LIQUIDS ☐ SUSPENDING SOLIDS

MIXING CYCLE: ☐ CONTINUOUS TOTAL FLOW RATE____GPM

☐ BATCH DESIGNED TO MIX 75 GAL IN 10 MINUTES

VESSEL DETAILS

SIZE: 150 GAL (3' DIA X 4' HIGH) TYPE:__

TOP: ☐ OPEN ☐ CLOSED BOTTOM: ☒ FLAT ☐ CONE ☐ ROUND

MATERIAL OF CONSTRUCTION: CARBON STEEL

ENTRANCE: ☒ TOP ☐ SIDE

NOZZLE: SIZE & RATING:____ MAT.:____

DESIGN PRESS.: ATM PSIG TEMP. 60°F

☐ COILS ☐ BAFFLES SKETCH NO.:

MIXER DETAILS

☒ IMPELLER ☐ TURBINE ☐ PROPELLER

NO. OF IMPELLERS: 1 SIZE:____ BLADES EA.:____

IMPELLER RPM:____ BHP:____ MAT.:____

BLADES: ☐ FIXED ☐ REMOVABLE ☐ FLAT ☐ UP THRUST ☐ DOWN THRUST ☐ STABILIZER REQ'D.

SHAFT: DIAM.:____ LENGTH:____

MAT.:____ CRITICAL SPEED:____ RPM

SEALING REQUIREMENTS: ☐ PACKING TYPE:____

☐ MECH. SEAL MFG. ☐ MODEL:____

☐ CARTRIDGE ☐ DOUBLE ☐ SINGLE

MOUNTING: ☐ NOZZLE ☐ CLAMP ☐ BEAM

DRIVE DETAILS

☐ GEAR REDUCER:

TYPE:____ RATIO:____ LUBE:____

AGMA CLASS:____ SERVICE FACTOR:____

COUPLINGS: MFG. & MODEL:____

H.S. SHAFT: ☐ FLEXIBLE ☐ RIGID RPM:____

L.S. SHAFT: ☐ FLEXIBLE ☐ RIGID RPM:____

BEARINGS: ☐ RADIAL ☐ THRUST ☐ STEADY

MOTOR MFG.:____

FURN. BY:____ MTD. BY:____

HP: 1/2 RPM:____ VOLTS/PHASE/H_z: 460/3/60

ENC.:____ INSUL.:____ LUBE:____

FRAME:____ FULL LOAD AMPS:____ STARTING AMPS:____

GENERAL INFORMATION

WEIGHT: 60 LBS DIMENSION PRINT NO.:____

REMARKS: *FOR BATCH OPERATIONS
1. TANK WILL HAVE COVER

9413227.0805

UNITED ENGINEERS & CONSTRUCTORS A Raytheon Company Western Operations	EQUIPMENT DATA SHEET ☒ CDR ☐ TITLE I ☐ TITLE II ☐ TITLE III	ITEM NUMBER M-05-201	PAGE 1 OF 1

CUSTOMER & LOCATION	PROJECT	UE&C JOB NO. 6237.006	DATE: 04/22/92
DOE-RL/WHC HANFORD, WA	WRAP FACILITY MODULE 2A	ACCOUNT NO.	BY: SMM

REVISIONS (DATE & BY)	A		B		C		D	
	E		F		G		H	

SERVICE	MANUFACTURER	NO. REQ'D.	SOURCE OF QUOTE
VIBRATORY MIXER		1	

CONDITIONS OF SERVICE

MIXING REQUIREMENTS

FLUID 1: PREMIXED GROUT

60 WT % OF TOTAL (H0 % WASTE LOADING)
BULK DENSITY: 90 LBS/CU FT
VICOSITY: 225 CP (500 MM (PAS/FLOW))
TEMPERATURE: 60°F

FLUID 2: SHREDDED/BULK WASTE

40% WT OF TOTAL

CYCLE REQUIREMENTS

VIBRATE/MIX 50 GALLONS IN 15 MINUTES

CONTAINER SIZE: 55 GALLON DRUM (23.5" X 34.5")
MAXIMUM WT.: 1,000 LBS

SECTION 15250

94/3227.0807

THIS PAGE INTENTIONALLY
LEFT BLANK

THIS PAGE INTENTIONALLY
LEFT BLANK

WRAP MODULE 2A

SPECIFICATION SECTION
FOR
15250 MECHANICAL INSULATION

TABLE OF CONTENTS

PART 1 GENERAL

1.01 SECTION SCOPE
1.02 RELATED SECTIONS
1.03 REFERENCES
1.04 SYSTEM DESCRIPTION
1.05 SUBMITTALS
1.06 DELIVERY, STORAGE AND HANDLING
1.07 SITE CONDITIONS

PART 2 PRODUCTS

2.01 MANUFACTURERS
2.02 MATERIALS
2.03 EQUIPMENT
2.04 COMPONENTS
2.05 FABRICATION
2.06 SHOP QUALITY CONTROL

PART 3 EXECUTION

3.01 PREPARATION
3.02 ERECTION, INSTALLATION AND APPLICATION
3.03 FIELD QUALITY CONTROL
3.04 ADJUSTING AND CLEANING
3.05 DEMONSTRATION
3.06 PROTECTION

WRAP MODULE 2A

SECTION 15250

MECHANICAL INSULATION

PART 1 GENERAL

1.01 SECTION SCOPE

A. This specification establishes the requirements for detailed design, fabrication, installation, start-up, and acceptance testing of chilled glycol piping, run-around heat recovery glycol piping and outside air, supply and return ductwork.

1.02 RELATED SECTIONS

1.03 REFERENCES

A. American Society of Testing and Materials (ASTM)
ASTM C-547
ASTM C-534
ASTM C-612
ASTM C-553

B. American Society of Heating, Refrigeration and Air Conditioning Engineers (ASHRAE)
ASHRAE Std. 90

PART 2 PRODUCTS

2.02 MATERIALS

A. Rigid molded fiber glass pipe covering having a density of 4 pounds/cubic foot in compliance with ASTM C-547, having a k-factor of approximately 0.22 at 75°F, and suitable for temperatures from minus 40°F to 450°F. The thickness of the insulation is per ASHRAE Std. 90.

B. Faced Fiberglass Equipment Insulation: Rigid molded fiber glass pipe covering having a density of 6 pounds/cubic foot in compliance with ASTM C-612, having a k-factor of approximately 0.22 at 75°F, and suitable for temperatures from minus 40°F to 250°F. The thickness of the insulation is per ASHRAE Std. 90.

C. Faced Fiberglass Duct Insulation Board: Rigid molded fiber glass pipe covering having a density of 3

0080.2227.0809

pounds/cubic foot in compliance with ASTM C-612, having a k-factor of approximately 0.22 at 75°F, and suitable for temperatures from minus 40°F to 250°F. The thickness of the insulation is per ASHRAE Std. 90.

END OF SECTION

0180.22.94

THIS PAGE INTENTIONALLY
LEFT BLANK

SECTION 15330

94L3227.0811

THIS PAGE INTENTIONALLY
LEFT BLANK

WRAP MODULE 2A

SPECIFICATION SECTION
FOR
15330 FIRE PROTECTION SPRINKLER SYSTEMS

TABLE OF CONTENTS

PART 1 GENERAL

1.01 SECTION SCOPE
1.02 RELATED SECTIONS
1.03 REFERENCES
1.04 SYSTEM DESCRIPTION
1.05 SUBMITTALS
1.06 DELIVERY, STORAGE AND HANDLING
1.07 SITE CONDITIONS

PART 2 PRODUCTS

2.01 MANUFACTURERS
2.02 MATERIALS
2.03 EQUIPMENT
2.04 COMPONENTS
2.05 FABRICATION
2.06 SHOP QUALITY CONTROL

PART 3 EXECUTION

3.01 PREPARATION
3.02 ERECTION, INSTALLATION AND APPLICATION
3.03 FIELD QUALITY CONTROL
3.04 ADJUSTING AND CLEANING
3.05 DEMONSTRATION
3.06 PROTECTION

2180.227.MG

WRAP MODULE 2A

SECTION 15330

FIRE PROTECTION SPRINKLER SYSTEMS

PART 1 GENERAL

1.01 SECTION SCOPE

A. This specification establishes the requirements for detailed design, fabrication, installation, start-up and acceptance testing of the wet and dry pipe sprinkler fire protection systems for WRAP Module 2A.

1.02 RELATED SECTIONS

1.03 REFERENCES

A. National Fire Protection Association (NFPA)

NFPA 13 - 1991	Installation of Sprinkler Systems
NFPA 14 - 1990	Installation of Standpipe and Hose Systems
NFPA 70 - 1990	National Electrical Code
NFPA 72 - 1990	Installation, Maintenance and Use of Protective Signaling Systems
NFPA 101 - 1991	Life Safety Code
NFPA 231C - 1991	Rack Storage of Materials

B. Department of Energy (DOE)

DOE 5480.7	Fire Protection
RLIP 5480.7	Fire Protection
DOE 6430.1A	General Design Criteria
DOE/EP-0108	Standard for Fire Protection of DOE Electronic Computer/Date Processing Systems

C. Factory Mutual Approval Guides

D. Underwriters Laboratory (UL)

UL	Fire Protection Equipment Directory

E. Drawings

1. Fire Protection Zone Plan - Ground and Lower Level, Rev. A

9413227.0813

2. Fire Protection Utility Flow Diagram, Rev. A

3. Fire Protection Zone Plan - Upper Level, Rev. A

1.04 SYSTEM DESCRIPTION

A. Fire Areas and Zones

1. The entire facility shall be provided with automatic wet or dry pipe sprinkler protection. The facility shall be divided into two fire areas (i.e., areas separated by 2 hour fire rated barriers). Fire Area 1 covers all process support areas; i.e., the non-SWP sections of the building. Fire Area 2 covers the process area and glovebox enclosures (SWP portions of the building). See Drawings 140696 and 140697.

2. Each Fire area shall be further subdivided into fire zones. Each fire zone shall be identified separately at the Fire Alarm Control Panel (FACP).

B. Sprinkler Systems - General

1. Two looped sprinkler systems, corresponding to the two Fire Areas discussed above, shall be provided to protect the entire facility. Each sprinkler system shall be complete with redundant risers and alarm check valves.

2. Each zone within a sprinkler system shall be provided with isolation valves with valve tamper switches. An individual water flow switch for each zone shall provide alarm and location information at the FACP in the event of a fire.

3. Sprinkler systems shall interface with building fire and smoke alarm system as shown on Drawing 140695.

4. A fire department connection shall be provided as shown on Drawings 140696 and 140695.

C. Sprinkler System - Fire Area 1

1. With the exception of the polymer storage zone, described below, this sprinkler system shall be hydraulically designed to NFPA 13 Ordinary Hazard, Group 1 criteria. The system design density shall be 0.15 gpm per sq. ft. over 1,500 sq. ft. design area.

9413227.0814

Ordinary temperature rated sprinkler heads shall be used. All zones, except for the polymer storage zone, shall be wet pipe.

2. The polymer storage zone shall be hydraulically designed to meet NFPA 13 Ordinary Hazard, Group 2 criteria. The system design density shall be 0.20 gpm per sq. ft. over a design area of 1,500 sq. ft. This zone shall be designed as a dry pipe system and shall include exposure protection sprinklers to protect the building exterior. Ordinary temperature rated sprinkler heads shall be used.

D. Sprinkler System - Fire Area 2

1. This sprinkler system shall be hydraulically designed to NFPA 13 Ordinary Hazard, Group 2 criteria. The system design density shall be 0.20 gpm per sq. ft. over 1,500 sq. ft. design area. Intermediate temperature rated sprinkler heads will be used throughout.

2. The gloveboxes shall be provided with automatic wet pipe sprinkler systems of the supervised pre-action type to minimize the possibility of accidental discharge of water.

3. The drum storage area shall be provided with an in-rack sprinkler system designed in accordance with NFPA 231C "Rack Storage of Materials".

END OF SECTION

9413227.0815

SECTION 15375

9180.227/3 HG

THIS PAGE INTENTIONALLY
LEFT BLANK

WRAP MODULE 2A

SPECIFICATION SECTION
FOR
15375 STANDPIPE AND HOSE SYSTEMS

TABLE OF CONTENTS

Page

PART 1 GENERAL

1.01 SECTION SCOPE
1.02 RELATED SECTIONS
1.03 REFERENCES
1.04 SYSTEM DESCRIPTION
1.05 SUBMITTALS
1.06 DELIVERY, STORAGE AND HANDLING
1.07 SITE CONDITIONS

PART 2 PRODUCTS

2.01 MANUFACTURERS
2.02 MATERIALS
2.03 EQUIPMENT
2.04 COMPONENTS
2.05 FABRICATION
2.06 SHOP QUALITY CONTROL

PART 3 EXECUTION

3.01 PREPARATION
3.02 ERECTION, INSTALLATION AND APPLICATION
3.03 FIELD QUALITY CONTROL
3.04 ADJUSTING AND CLEANING
3.05 DEMONSTRATION
3.06 PROTECTION

9413227.0817

WRAP MODULE 2A

SECTION 15375

STANDPIPE AND HOSE SYSTEMS

PART 1 GENERAL

1.01 SECTION SCOPE

A. This specification establishes the requirements for detailed design, fabrication, installation, start-up, and acceptance testing of the standpipe and hose systems for WRAP Module 2A.

1.02 RELATED SECTIONS

1.03 REFERENCES

A. National Fire Protection Association

NFPA 13 - 1991	Installation of Sprinkler Systems
NFPA 14 - 1990	Installation of Standpipe and Hose Systems
NFPA 70 - 1990	National Electrical Code
NFPA 72 - 1990	Installation, Maintenance, and Use of Protective Signalling Systems
NFPA 101 - 1991	Life Safety Code

B. Department of Energy

DOE 5480.7	Fire Protection
RLIP 5480.7	Fire Protection
DOE 6430.1A	General Design Criteria

C. Factory Mutual Approval Guides

D. UL Fire Protection Equipment Directory

E. Drawings

1. Fire Protection Zone Plan - Ground and Lower Level, Rev. A
2. Fire Protection Utility Flow Diagram, Rev. A
3. Fire Protection zone Plan - Upper Level, Rev. A

1.04 SYSTEM DESCRIPTION

A. Wet standpipes and fire hose connections shall be located throughout WRAP Module 2A.

9413227.0818

B. The system shall be designed to NFPA 14, Class I requirements.

C. The system shall interface with the building fire alarm and smoke detection system.

D. Hose connections shall be provided in each airlock and as required elsewhere to provide complete coverage.

E. Hose connections only are provided. The standpipe system is intended for the use of the Hanford Fire Department only, and not the building occupants.

END OF SECTION

9413227.0819

THIS PAGE INTENTIONALLY
LEFT BLANK

SECTION 15400

944 3227.0820

THIS PAGE INTENTIONALLY
LEFT BLANK

WRAP MODULE 2A

SPECIFICATION SECTION
FOR
15400 PLUMBING SYSTEMS

TABLE OF CONTENTS

PART 1 GENERAL

1.01 SECTION SCOPE
1.02 RELATED SECTIONS
1.03 REFERENCES
1.04 SYSTEM DESCRIPTION
1.05 SUBMITTALS
1.06 DELIVERY, STORAGE AND HANDLING
1.07 SITE CONDITIONS

PART 2 PRODUCTS

2.01 MANUFACTURERS
2.02 MATERIALS
2.03 EQUIPMENT
2.04 COMPONENTS
2.05 FABRICATION
2.06 SHOP QUALITY CONTROL

PART 3 EXECUTION

3.01 PREPARATION
3.02 ERECTION, INSTALLATION AND APPLICATION
3.03 FIELD QUALITY CONTROL
3.04 ADJUSTING AND CLEANING
3.05 DEMONSTRATION
3.06 PROTECTION

WRAP MODULE 2A

SECTION

15400

PART 1 GENERAL

1.01 SECTION SCOPE

A. Plumbing systems for the entire building.

1.02 RELATED SECTIONS

1.03 REFERENCES

A. Uniform Plumbing Code, 1991 Edition

B. American national Standards Institute A117.1.

C. Hanford A/E Standards

1.04 SYSTEM DESCRIPTION

A. Sanitary Drainage System Inside Building: Extent of system shall include the building drains, branch piping, waste and vent stacks, fixture traps, cleanouts and other related items as hereinafter specified and connections to plumbing fixtures, floor drains and other equipment indicated on Drawings or specified as requiring waste, drain and vent facilities.

1. Building sanitary drains shall interface with sanitary sewers 5 feet outside building wall.

B. Storm Drainage System: Shall consist of exterior gutters and downspouts.

1. The gutters and downspouts shall discharge to concrete splashblocks at grade.

C. Potable Cold Waster Distribution: Extent of system shall include distribution pipes, necessary connecting pipes, fittings, shut-off valves, pressure regulating valves, backflow preventers, shock absorbers and other supply specialties as indicated on Drawings and as specified herein, and connections to plumbing fixtures and other equipment indicated on the Drawings and specified as requiring cold water, including connections to equipment

9413227.0822

furnished under other Sections and Divisions of these Specifications.

1. Potable water service line shall include piping from a point 5 feet outside the building wall and throughout the building.

D. Potable Hot Water Distribution Systems: Shall include electric water heater, circulating pump, water distribution and circulating lines, necessary connecting pipes, fittings, shut-off valves and other parts specified herein and indicated on Drawings and connections to plumbing fixtures and other equipment requiring hot water, including connections to equipment furnished under other sections and Divisions of these Specifications.

2.04 COMPONENTS

A. **Lavatories (Countertop)**

White, vitreous china, 21" x 19" self-rimming countertop lavatory; cast brass 1.25 inch P-trap with cleanout; 1.25 inch tailpiece with integral strainer; flexible supplies with loose key stops, cold and hot water mixing faucet.

B. **Lavatories (Wall Mounted)**

White vitreous china, 20" x 23" wall mounted with carrier lavatory; cast brass 1.25 inch P-trap with cleanout; 1.25 inch tailpiece with integral strainer; flexible supplies with loose key stops, cold and hot water mixing faucet.

C. **Mop Service Basin**

Floor Mounted: Molded stone 24" x 24" with 10 inch high sides and integral cast drain; removable strainer plate; and chrome-plated all brass faucet with rigid hose-end spout and pall hook; integral stops; vacuum breaker and wall brace.

D. **Electric Water Cooler**

Wall Mounted: All stainless steel top and cabinet, automatic stream regulator, chrome plated cast brass 1.25 inch P-trap.

9413227.0823

E. **Electric Water Cooler (Handicapped)**

Wall mounted barrier free electric water cooler; all stainless steel top and cabinet; chrome plated cast brass 1.25 inch P-trap; and automatic stream regulator.

F. **Shower Trim**

Thermostatic mixing valve for concealing piping, metal lever control handle combination strainer check stops, 3 gpm maximum shower head with spray adjustment, shower arm and escutcheon. Drain with double drainage flange.

G. **Decontamination Shower**

Reinforced molded fiberglass three sided booth with base and top, six chrome-plated brass spray nozzles along side of unit, one spray nozzle mounted at top of unit. One inch self-closing valve actuated by walk-on galvanized steel treadle. One duel head eye/face wash mounted on the rear wall of the unit. Two inch I.P.S. drain connection.

H. **Emergency Shower/Eyewash**

Free standing combination shower and eyewash, 1.25 inch galvanized pipe with 9 inch floor flange, stay-open chrome plated brass ball valves, shower valve operated with rigid stainless steel pull-rod; eyewash operated with foot-treadle or push-flag.

I. **Plumbing Fixture Mounting Heights**

- Waterclosets: 15 inches floor to rim
- Handicapped waterclosets: 18 inches floor to rim
- Urinals: 24 inches floor to rim
- Lavatories: 34 inches floor to rim
- Handicapped lavatories: per ANSI 117.1
- Electric water coolers: 40 inch floor to rim
- Handicapped electric water coolers: 36 inch maximum floor to spout outlet; 27 inch minimum floor to underside of cabinet
- Mop service basin: floor mounted, mount faucet 30 inch above floor.

J. **Plumbing Equipment**

Electric water heater (H-12-201), 700 gallon electric storage water heater, ASME glasslined tank, 125 psi

94/3227.0824

working pressure, insulated to meet ASHRAE 90A energy standards. 60 KW input, 480 volt, 3 phase. 246 GPH recovery at 100°F temperature rise. Four heating elements. Entire vessel and controls shall be encased in a rectangular sheet metal enclosure with baked enamel finish.

K. **Potable Hot Water Circulating Pump**

Pump shall be in-line, all bronze fitted ,horizontal mounted with flanged connections.

1. Pump shall be 1 inch pipe size, 10 gpm at 8 feet TDH, 1/12 horsepower, 1,750 rpm, 115 volt, single phase.

2. Provide support and anchor piping as required to support circulating pump.

3. Pump shall be controlled by an on-off wall mounted toggle switch.

L. **Thermostatic Mixing Valve**

Thermostatic tempering valve for exposed piping, solid bimetal thermostat, adjustable screwdriver operated temperature setting (set at 110°F); angle checkstops on inlets, copper tube connections.

M. **Trap Primer Valve**

Automatic floor drain trap primer valve, brass body with vacuum breaker, 0.5 inch pipe size.

N. **Hose Bibb (Interior)**

Chrome plated brass with 0.75 inch hose thread, vacuum breaker, wall flange and removable metal handle.

O. **Wall Hydrant (Exterior)**

Cast bronze exterior freeze-proof wall hydrant, integral vacuum breaker, 0.75 inch hose thread outlet, bronze operating key; satin finish Nikaloy face; and 0.75 inch inlet connection.

94 4227 0825

P. **Shock Absorbers**

Stainless steel bellows type with combination pressurized nitrogen-hydraulic fluid compression chamber.

Certification: Units shall be certified in accordance with Plumbing and Drainage Institute Standard WH-201.

Approved Manufacturers: Subject to compliance with requirements, Josam 75000 Series; Smith 5000 Series or Zurn Z-1700 Series are acceptable.

Plan Code	P.D.I. Size	Fixture Units
SA-1	A	1-11
SA-2	B	12-32
SA-3	C	33-60

Provide 12" x 12" access panel for all concealed shock absorbers.

Q. **Floor Drains (Finished Areas)**

Cast iron body with 6 inch diameter Nikaloy adjustable strainer head, bottom inside caulk outlet and flashing collar; 0.50 inch primer tap.

R. **Floor Drains (Mechanical Equipment Rooms)**

Cast iron body with 9 inch diameter Nikaloy adjustable strainer, removable sediment bucket, flashing collar.

PART 3 EXECUTION

3.02 ERECTION, INSTALLATION AND APPLICATION

A. **Fixture Installation**

Secure fixtures to walls and floor or countertops in accordance with manufacturer's roughing-in and setting requirements and form a rigid installation.

B. **Testing**

All piping shall be tested for leaks before being covered or concealed.

END OF SECTION

94113227.0826

SECTION 15450

94/3227.0827

THIS PAGE INTENTIONALLY
LEFT BLANK

THIS PAGE INTENTIONALLY
LEFT BLANK

WRAP MODULE 2A

SPECIFICATION SECTION
FOR
15450 PLUMBING FIXTURES AND EQUIPMENT

TABLE OF CONTENTS

PART 1 GENERAL

1.01 SECTION SCOPE
1.02 RELATED SECTIONS
1.03 REFERENCES
1.04 SYSTEM DESCRIPTION
1.05 SUBMITTALS
1.06 DELIVERY, STORAGE AND HANDLING
1.07 SITE CONDITIONS

PART 2 PRODUCTS

2.01 MANUFACTURERS
2.02 MATERIALS
2.03 EQUIPMENT
2.04 COMPONENTS
2.05 FABRICATION
2.06 SHOP QUALITY CONTROL

PART 3 EXECUTION

3.01 PREPARATION
3.02 ERECTION, INSTALLATION AND APPLICATION
3.03 FIELD QUALITY CONTROL
3.04 ADJUSTING AND CLEANING
3.05 DEMONSTRATION
3.06 PROTECTION

9W4227.0828

WRAP MODULE 2A

SECTION 15450

PLUMBING FIXTURES AND EQUIPMENT

PART 1 GENERAL

1.01 SECTION SCOPE

A. Work includes plumbing fixtures and equipment for entire building.

1.02 RELATED SECTIONS

A. Section 15400 - Plumbing Systems

1.03 REFERENCES

A. All fixtures and equipment shall be in compliance with the Uniform Plumbing Code, 1991 Edition.

B. Facilities for the physically handicapped shall be in compliance with the American National Standards Institute A117.1 edition.

PART 2 PRODUCTS

2.02 MATERIALS

A. Sanitary Waste and Vent Piping: Shall consist of service weight cast iron soil pipe, tar coated inside and outside, ASTM A74. Hub and spigot type piping shall be used below the floor slab. No-hub type or hub and spigot type piping shall be used above the floor slab. Joints for hub and spigot piping shall be with neoprene gaskets, ASTM C564. Joints for no-hub piping shall be with stainless steel shield and neoprene sleeve, C.I.S.P.I., 310.

B. Cleanouts:

1. Provide cleanouts where indicated on Drawings and, at junction of building drain with building sewer, at points of change in direction greater than 45 degrees in horizontal drains, at 50 foot intervals inside building in straight runs, at end of branch drains, and at base of waste stacks.

94A3227.0829

2. Cleanouts shall be full size of pipe on pipes up to 4 inches in diameter and 4 inches for larger pipes.

3. Plugs for cleanouts shall be brass or bronze with countersunk slot and lead seal.

C. Potable Water Piping: Shall consist of Type "L" hard drawn seamless copper tube, ASTM B88. Wrought copper or cast bronze solder joint fittings, ANSI B16.22. Joints above floor 95-5 (Tin-antimony) solder. Joints below floor brazed with silver alloy filler metal.

D. Valves:

1. Gate Valves: Bronze, 125 psig SWP, solid wedge, union bonnet, rising stem, threaded.

2. Check Valves: Bronze, 125 psig SWP, "Y" pattern, swing type, threaded.

3. Ball Valves: Cast bronze body, bronze ball, full port, 150 psig SWP with blowout-proof silicon bronze stem and buna N seat, threaded ends.

4. Pressure Regulating Valve: Bronze body, stainless steel integral strainer, stainless steel seat, 300 psi inlet pressure, 25 to 75 psi adjustable range, threaded ends with union inlet.

E. Insulation: Insulate all potable cold and hot waster piping with rigid molded fiber glass pipe covering having a density of 4 pounds per cubic foot, in compliance with ASTM C547, having a K-factor of approximately 0.22 at 75°F, .5 inch thick for cold water and 1 inch thick for hot water.

F. Traps:

1. Separate Fixture Traps: Provide traps for fixtures and other equipment requiring connection to drainage systems, except where trap is an integral part of the fixture.

2. Floor Drain Traps: Traps for floor drains shall be approved "P" pattern. Material, weight and joint type shall conform to pipe and fittings of drainage system in which installed.

9413227.0830

2.04 COMPONENTS

A. **Plumbing Fixtures**

Provide plumbing fixtures complete with all required trim, including but not limited to, carriers, support faucets, stops, waste fittings, traps, seat, flushometer, vacuum breakers, bolts, gaskets and escutcheons.

Metal trim, exposed piping and escutcheons shall be chrome plated.

Subject to compliance with requirements, acceptable manufacturers are:

1. Waterclosets, Urinals and Lavatories: Kohler, American Standard and Crane.

2. Mop Service Basins: Fiat, Stern-Williams and Florestone.

3. Electric Water Coolers: Oasis, Elkay, Halsey-Taylor and Haws.

4. Shower Trim: Powers, Leonard, Speakman and Symmons.

5. Emergency Showers, Decontamination Showers: Haws and Guardian.

6. Eye Wash: Haws and Guardian.

7. Faucets and Trim: Kohler, American Standard, Crane, Symmons, Speakman and Chicago Faucet.

8. Flush Valves: Sloan, Delany and Zurn.

9. Seats: Kohler, Olsonite, Church and Beneke.

10. Sinks: Elkay, Just and Kohler.

11. Floor Drains: Josam, Zurn and J.R. Smith.

12. Carriers: Josam, Zurn and J.R. Smith.

B. **Water Closets**

Flush Valve, Wall Hung: White, vitreous china, siphon jet, elongated rim water closet with 1.5 inch top spud;

6237.0831

white, solid plastic open front seat with self-sustaining check hinge and less cover; flush valve and vacuum breaker and rubber bumper on screwdriver 1 inch angle stop; and carrier, horizontal or vertical with fittings as required.

C. **Urinals**

White, vitreous china washout urinal with integral extended shields, flushing rim, trap and .75 inch top spud, flush valve with vacuum breaker on screwdriver .75 inch angle stop, and carrier with bottom bearing plate, feet or block base as required.

END OF SECTION

94 3227 0832

THIS PAGE INTENTIONALLY
LEFT BLANK

SECTION 15481

94J3227.0833

THIS PAGE INTENTIONALLY
LEFT BLANK

WRAP MODULE 2A

SPECIFICATION SECTION
FOR
15481 COMPRESSED AIR SYSTEMS

TABLE OF CONTENTS

PART 1 GENERAL

1.01 SECTION SCOPE
1.02 RELATED SECTIONS
1.03 REFERENCES
1.04 SYSTEM DESCRIPTION
1.05 SUBMITTALS
1.06 DELIVERY, STORAGE AND HANDLING
1.07 SITE CONDITIONS

PART 2 PRODUCTS

2.01 MANUFACTURERS
2.02 MATERIALS
2.03 EQUIPMENT
2.04 COMPONENTS
2.05 FABRICATION
2.06 SHOP QUALITY CONTROL

PART 3 EXECUTION

3.01 PREPARATION
3.02 ERECTION, INSTALLATION AND APPLICATION
3.03 FIELD QUALITY CONTROL
3.04 ADJUSTING AND CLEANING
3.05 DEMONSTRATION
3.06 PROTECTION

APPENDIX

APPENDIX A DATA SHEETS

9117227.0834

WRAP MODULE 2A

SECTION 15481

COMPRESSED AIR SYSTEMS

PART 1 GENERAL

1.01 SECTION SCOPE

A. This specification establishes the requirements for detailed design, fabrication, installation, start-up, and acceptance testing of utility air compressors and compressed air systems for WRAP Module 2A Facility.

1.02 RELATED SECTIONS

1.03 REFERENCES

A. American National Standards Institute (ANSI)

B. ASME Boiler and Pressure Vessel Code (ASME)

C. American Welding Society (AWS)

D. National Electric Code (NEC)

1.04 SYSTEM DESCRIPTION

A. Provide process and dried filtered instrument air to all facility processes. Provide nitrogen gas to process systems and provide portable breathing air systems.

The compressors will be two rotary screw type with pre and after filters, twin dryers and vertical receiver. The nitrogen gas system will use a permeable membrane system and store nitrogen in an integral receiver.

The breathing air systems will be portable bottles on racks with mask and hose.

Equipment Tag Nos. WBS Area Location Numbers and equipment data sheets for this description are provided in **Appendix A.**

END OF SECTION

9413227.0835

WRAP MODULE 2A

APPENDIX A

EQUIPMENT/INSTRUMENT DATA SHEETS

WBS LOCATION	EQUIPMENT TAG	SERVICE
1112	C-12-301A,B	Instrument Air Compressor
1112	DR-12-301	Instrument Air Dryer
1112	F-12-301 A,B	Instrument Air Prefilter
1112	F-12-302	Instrument Air After Filter
1112	V-12-301	Instrument Air Receiver
1112	U-12-301	Nitrogen Generation Package
1112	V-12-302	Nitrogen Receiver
1112	BA-12-301	Portable Breathing Air
1112	BA-12-302	Portable Breathing Air
1112	BA-12-303	Portable Breathing Air
1112	BA-12-304	Portable Breathing Air
1112	BA-12-305	Portable Breathing Air
1112	BA-12-306	Portable Breathing Air

9413277.0836

WRAP MODULE 2A

WBS LOCATION	EQUIPMENT TAG	SERVICE
1112	BA-12-307	Portable Breathing Air
1112	BA-12-308	Portable Breathing Air
1112	BA-12-309	Portable Breathing Air
1112	BA-12-310	Portable Breathing Air

9413227.0837

UNITED ENGINEERS
& CONSTRUCTORS
A Raytheon Company

Western Operations

CUSTOMER: DOE-RL/WHC
PROJECT: WRAP FACILITY MODULE 2A
LOCATION: HANFORD, WA

ITEM NO.: BA-12-301
ACCT.:
UE&C JOB: 6237.006
PAGE: 1 OF 1
DATE: 04/30/92 BY: KDV

SERVICE: PORTABLE BREATHING AIR SUPPLY UNITS NO. REQ'D.: 1
REVISIONS: A BY B BY C BY D BY
MANUFACTURER: MODEL: SIZE: TYPE:
SOURCE: QUOTATION NO.: DATE:

THE PORTABLE BREATHING AIR SUPPLY UNITS INCLUDE THE FOLLOWING:

- 2 HIGH PRESSURE AIR BOTTLES SECURED TO A PORTABLE RACK UNIT
- 100 FEET OF HOSE AND MASK
- VALVES, REGULATORS AND ALARMS WILL BE MANIFOLDED TOGETHER WITH THE AIR BOTTLES ON THE RACK UNIT

9413227.0838

UNITED ENGINEERS
& CONSTRUCTORS
A Raytheon Company

Western Operations

CUSTOMER: DOE-RL/WHC
PROJECT: WRAP FACILITY MODULE 2A
LOCATION: HANFORD, WA

ITEM NO.: BA-12-302
ACCT.:
UE&C JOB: 6237.006
PAGE: 1 OF 1
DATE: 04/30/92 BY: KDV

SERVICE: PORTABLE BREATHING AIR SUPPLY UNITS NO. REQ'D.: 1
REVISIONS: A BY B BY C BY D BY
MANUFACTURER: MODEL: SIZE: TYPE:
SOURCE: QUOTATION NO.: DATE:

THE PORTABLE BREATHING AIR SUPPLY UNITS INCLUDE THE FOLLOWING:

- 2 HIGH PRESSURE AIR BOTTLES SECURED TO A PORTABLE RACK UNIT
- 100 FEET OF HOSE AND MASK
- VALVES, REGULATORS AND ALARMS WILL BE MANIFOLDED TOGETHER WITH THE AIR BOTTLES ON THE RACK UNIT

9413227.0839

UNITED ENGINEERS
& CONSTRUCTORS
A Raytheon Company

Western Operations

CUSTOMER: DOE-RL/WHC
PROJECT: WRAP FACILITY MODULE 2A
LOCATION: HANFORD, WA

ITEM NO.: BA-12-303
ACCT.:
UE&C JOB: 6237.006
PAGE: 1 OF 1
DATE: 04/30/92 BY: KDV

SERVICE: PORTABLE BREATHING AIR SUPPLY UNITS NO. REQ'D.: 1
REVISIONS: A BY B BY C BY D BY
MANUFACTURER: MODEL: SIZE: TYPE:
SOURCE: QUOTATION NO.: DATE:

THE PORTABLE BREATHING AIR SUPPLY UNITS INCLUDE THE FOLLOWING:

- **2 HIGH PRESSURE AIR BOTTLES SECURED TO A PORTABLE RACK UNIT**
- **100 FEET OF HOSE AND MASK**
- **VALVES, REGULATORS AND ALARMS WILL BE MANIFOLDED TOGETHER WITH THE AIR BOTTLES ON THE RACK UNIT**

9413227.0840

UNITED ENGINEERS
& CONSTRUCTORS
A Raytheon Company

Western Operations

CUSTOMER: DOE-RL/WHC
PROJECT: WRAP FACILITY MODULE 2A
LOCATION: HANFORD, WA

ITEM NO.: BA-12-304
ACCT.:
UE&C JOB: 6237.006
PAGE: 1 OF 1
DATE: 04/30/92 BY: KDV

SERVICE: PORTABLE BREATHING AIR SUPPLY UNITS NO. REQ'D.: 1
REVISIONS: A BY B BY C BY D BY
MANUFACTURER: MODEL: SIZE: TYPE:
SOURCE: QUOTATION NO.: DATE:

THE PORTABLE BREATHING AIR SUPPLY UNITS INCLUDE THE FOLLOWING:

- 2 HIGH PRESSURE AIR BOTTLES SECURED TO A PORTABLE RACK UNIT
- 100 FEET OF HOSE AND MASK
- VALVES, REGULATORS AND ALARMS WILL BE MANIFOLDED TOGETHER WITH THE AIR BOTTLES ON THE RACK UNIT

9413227.0841

UNITED ENGINEERS
& CONSTRUCTORS
A Raytheon Company

Western Operations

CUSTOMER: DOE-RL/WHC
PROJECT: WRAP FACILITY MODULE 2A
LOCATION: HANFORD, WA

ITEM NO.: BA-12-305
ACCT.:
UE&C JOB: 6237.006
PAGE: 1 OF 1
DATE: 04/30/92 BY: KDV

SERVICE: PORTABLE BREATHING AIR SUPPLY UNITS NO. REQ'D.: 1
REVISIONS: A BY B BY C BY D BY
MANUFACTURER: MODEL: SIZE: TYPE:
SOURCE: QUOTATION NO.: DATE:

THE PORTABLE BREATHING AIR SUPPLY UNITS INCLUDE THE FOLLOWING:

- 2 HIGH PRESSURE AIR BOTTLES SECURED TO A PORTABLE RACK UNIT
- 100 FEET OF HOSE AND MASK
- VALVES, REGULATORS AND ALARMS WILL BE MANIFOLDED TOGETHER WITH THE AIR BOTTLES ON THE RACK UNIT

9413227.0842

UNITED ENGINEERS
& CONSTRUCTORS
A Raytheon Company

Western Operations

CUSTOMER: DOE-RL/WHC
PROJECT: WRAP FACILITY MODULE 2A
LOCATION: HANFORD, WA

ITEM NO.: BA-12-306
ACCT.:
UE&C JOB: 6237.006
PAGE: 1 OF 1
DATE: 04/30/92 BY: KDV

SERVICE: PORTABLE BREATHING AIR SUPPLY UNITS NO. REQ'D.: 1
REVISIONS: A BY B BY C BY D BY
MANUFACTURER: MODEL: SIZE: TYPE:
SOURCE: QUOTATION NO.: DATE:

THE PORTABLE BREATHING AIR SUPPLY UNITS INCLUDE THE FOLLOWING:

- 2 HIGH PRESSURE AIR BOTTLES SECURED TO A PORTABLE RACK UNIT
- 100 FEET OF HOSE AND MASK
- VALVES, REGULATORS AND ALARMS WILL BE MANIFOLDED TOGETHER WITH THE AIR BOTTLES ON THE RACK UNIT

9413227.0843

UNITED ENGINEERS
& CONSTRUCTORS
A Raytheon Company

Western Operations

CUSTOMER: DOE-RL/WHC
PROJECT: WRAP FACILITY MODULE 2A
LOCATION: HANFORD, WA

ITEM NO.: BA-12-307
ACCT.:
UE&C JOB: 6237.006
PAGE: 1 OF 1
DATE: 04/30/92 BY: KDV

SERVICE: PORTABLE BREATHING AIR SUPPLY UNITS NO. REQ'D.: 1
REVISIONS: A BY B BY C BY D BY
MANUFACTURER: MODEL: SIZE: TYPE:
SOURCE: QUOTATION NO.: DATE:

THE PORTABLE BREATHING AIR SUPPLY UNITS INCLUDE THE FOLLOWING:

- **2 HIGH PRESSURE AIR BOTTLES SECURED TO A PORTABLE RACK UNIT**
- **100 FEET OF HOSE AND MASK**
- **VALVES, REGULATORS AND ALARMS WILL BE MANIFOLDED TOGETHER WITH THE AIR BOTTLES ON THE RACK UNIT**

9413227.0844

UNITED ENGINEERS
& CONSTRUCTORS
A Raytheon Company

Western Operations

CUSTOMER: DOE-RL/WHC
PROJECT: WRAP FACILITY MODULE 2A
LOCATION: HANFORD, WA

ITEM NO.: BA-12-308
ACCT.:
UE&C JOB: 6237.006
PAGE: 1 OF 1
DATE: 04/30/92 BY: KDV

SERVICE: PORTABLE BREATHING AIR SUPPLY UNITS NO. REQ'D.: 1
REVISIONS: A BY B .BY C BY D BY
MANUFACTURER: MODEL: SIZE: TYPE:
SOURCE: QUOTATION NO.: DATE:

THE PORTABLE BREATHING AIR SUPPLY UNITS INCLUDE THE FOLLOWING:

- 2 HIGH PRESSURE AIR BOTTLES SECURED TO A PORTABLE RACK UNIT
- 100 FEET OF HOSE AND MASK
- VALVES, REGULATORS AND ALARMS WILL BE MANIFOLDED TOGETHER WITH THE AIR BOTTLES ON THE RACK UNIT

9113227.0045

UNITED ENGINEERS
& CONSTRUCTORS
A Raytheon Company

Western Operations

CUSTOMER: DOE-RL/WHC
PROJECT: WRAP FACILITY MODULE 2A
LOCATION: HANFORD, WA

ITEM NO.: BA-12-309
ACCT.:
UE&C JOB: 6237.006
PAGE: 1 OF 1
DATE: 04/30/92 BY: KDV

SERVICE: PORTABLE BREATHING AIR SUPPLY UNITS NO. REQ'D.: 1
REVISIONS: A BY B BY C BY D BY
MANUFACTURER: MODEL: SIZE: TYPE:
SOURCE: QUOTATION NO.: DATE:

THE PORTABLE BREATHING AIR SUPPLY UNITS INCLUDE THE FOLLOWING:

- **2 HIGH PRESSURE AIR BOTTLES SECURED TO A PORTABLE RACK UNIT**
- **100 FEET OF HOSE AND MASK**
- **VALVES, REGULATORS AND ALARMS WILL BE MANIFOLDED TOGETHER WITH THE AIR BOTTLES ON THE RACK UNIT**

9413227.0846

UNITED ENGINEERS
& CONSTRUCTORS
A Raytheon Company

Western Operations

CUSTOMER: DOE-RL/WHC
PROJECT: WRAP FACILITY MODULE 2A
LOCATION: HANFORD, WA

ITEM NO.: BA-12-310
ACCT.:
UE&C JOB: 6237.006
PAGE: 1 OF 1
DATE: 04/30/92 BY: KDV

SERVICE: PORTABLE BREATHING AIR SUPPLY UNITS NO. REQ'D.: 1
REVISIONS: A BY B BY C BY D BY
MANUFACTURER: MODEL: SIZE: TYPE:
SOURCE: QUOTATION NO.: DATE:

THE PORTABLE BREATHING AIR SUPPLY UNITS INCLUDE THE FOLLOWING:

- 2 HIGH PRESSURE AIR BOTTLES SECURED TO A PORTABLE RACK UNIT
- 100 FEET OF HOSE AND MASK
- VALVES, REGULATORS AND ALARMS WILL BE MANIFOLDED TOGETHER WITH THE AIR BOTTLES ON THE RACK UNIT

9113227.0017

UNITED ENGINEERS & CONSTRUCTORS
A Raytheon Company
Western Operations

EQUIPMENT DATA SHEET

☒ CDR ☐ TITLE I ☐ TITLE II ☐ TITLE III

ITEM NUMBER: C-12-301A,B

PAGE: 1 OF 1

CUSTOMER & LOCATION: DOE-RL/WHC HANFORD, WA

PROJECT: WRAP FACILITY MODULE 2A

UE&C JOB NO.: 6237.006

DATE: 04/29/92

ACCOUNT NO.:

BY: KDV

REVISIONS (DATE & BY)							
A		B		C		D	
E		F		G		H	

SERVICE	MANUFACTURER	NO. REQ'D	SOURCE OF QUOTE
INSTRUMENT AIR COMPRESSOR PACKAGE		2	

NO. COMPRESSORS REQ'D: 2 | SIZE & TYPE: OIL FLOODED ROTARY SCREW | NO. OF STAGES: SINGLE STAGE

NO. MOTORS REQ'D: 2 | ITEM NO.: SAME | PROVIDED BY: VENDOR | MTD. BY: VENDOR | REF. PAGE:

NO. OTHER DRIVERS REQ'D: | ITEM NO.: | PROVIDED BY: | MTD. BY: | REF. PAGE:

CONDITIONS OF SERVICE, EACH COMPRESSOR

☒ INSTRUMENT ☒ PLANT AIR ☐ OTHER

INLET CAPACITY @ RATED: 200 ACFM LB/HR DRY | BARO. 14.7 PSIA

INLET PRESS. @ RATED: ATM PSIA | INLET TEMP. @ RATED: 60°F

DISCH PRESS @ RATED: 139.7 PSIA | DISCH. TEMP. @ RATED: °F

MIN. INLET: 40°F | MAX INLET TEMP.: 70°F | AFTERCOOLER DISCH. TEMP. 85°F

REL. HUMIDITY: 100% | CLEAN FILTER PRESS. DROP: PSI

SURGE AT RATED RPM: INLET ACFM

COMPRESSOR CONSTRUCTION

NOZZLE LOADS: PARALLEL (IN LINE) (F_P), VERT(F_V), HORIZ 90° TO F_P(F_H) - AT FACE

ALLOW. LOADS	F_P(LB)	F_V	F_H	F_R	$M_{PCT.LIN}$	M_V	M_H	M_R
SUCTION								
DISCHARGE								

NOZZLES	SIZE	RATING	FACINGS	LOCATION
SUCTION				
DISCHARGE				

☒ PACKAGE COMP. | EQUIPMENT SUITABLE FOR OPERATION ☒ INDOOR ☐ OUTDOOR

☐ OIL FREE AIR | MAX. OPERATING CASE PRESS.: PSIG@ °F

SHAFT SEALS: ☐ LABYRINTH ☐ CARBON | LUBE PUMP DRIVE ☐ SHAFT ☐ MOTOR

BRGS.: ☐ ANTIFRICTION ☐ SLEEVE | THRUST BRG.: | MAX CONT. RPM:

AUXILIARIES

DRIVE: ☐ DIRECT ☐ ANTISPARKING V-BELT ☐ INTEGRAL GEAR ☐ GEAR UNIT SEE PG.:

COUPLING: TYPE MFR: MODEL: | ☐ GUARD (OSHA)

☒ INLET FILTER/SILENCER/WEATHERHOOD: INLET FILTER

☒ FILTER, DRY MICRON | ☐ DISCH. SILENCER | ☐ BLOW-OFF SILENCER

☐ THROTTLE VALVE: ☐ SUCTION ☐ DISCH. ☐ OPEN-CLOSE ☐ MODULATING

☐ BLOW-OFF VALVE: ☐ OPEN-CLOSE ☐ MODULATING | ☒ DISCH. CHECK VALVE

☒ RELIEVE VALVE | RELIEF VALVE SET AT 150 PSIG

☐ FOR RECEIVER, AFTERCOOLER, INTERCOOLER, SEPARATOR, SEE PG(S):

☐ RECEIVER, CAPACITY FT³ | ☐ RECEIVER DRAIN VALVE

☒ AFTERCOOLER: ☒ INTEGRAL ☐ REMOTE ☐ LIQUID ☒ AIR

☒ INTERCOOLER(S): ☒ INTEGRAL ☐ REMOTE ☐ LIQUID ☒ AIR

☒ CONDENSATE SEPARATOR, TRAP & DRAIN ON: ☒ AFTERCOOLER ☐ INTERCOOLER(S)

☒ SEPARATOR DRAIN VALVE(S) ☒ ELECT. ☐ PNEU. | ☐ FULL FLOW OIL FILTER

☐ VALVE(S) ON: H_2O JACKET ☐ AFTERCOOLER ☐ INTERCOOLER(S) | ☐ ELECT ☐ PNEU.

☐ ASME CODE SEC. VIII, DIV. 1 | ☐ WITH STAMP | ☐ APPLICABLE TO THE FOLLOWING:

☐ RECEIVER ☐ AFTERCOOLER ☐ INTERCOOLER(S) ☐ SEPARATOR(S)

MOTOR DRIVE

HP: | RPM: | FRAME: | VOLTS/PHASE/CYCLE: 460V/30/60

MFR.: | TYPE: SQUIRREL CAGE INDUCTION | NEMA DESIGN

ENCLOSURE: | RATED AMBIENT TEMP. 40°C | INSUL. CLASS:

ELEVATION: FT. | FULL LOAD AMPS: | SPACE HEATERS:

COOLING

LIQUID COOLANT: ☐ H_2O ☒ COOLING AIR TEMP. °F

LIQUID COOLANT: | TEMP °F | PRESS.: PSIG | MAX.ΔT: °F

COMP: GPM | AFTERCOOLER GPM | INTERCOOLER GPM

PERFORMANCE

PROPOSAL CURVE NO.:

BHP @ RATED: | RPM:

OVERALL EFF.: % | MAX. BHP RATED IMP.:

SUCT. THROTTLING. CFM: TO

SHOP TESTS

☐A. Performance ☐B. Mech. Run ☐C. Shop Insp.

☐D. Hydro On: ☐ E. All Press. Containing Parts

F. Comp. H_2O Jacket ☐G. Aftercooler

H. Intercooler(s) ☐ I. Case Hydro PSIG

J. Complete Unit Test

Test Requiring Witness ☐ A ☐ B ☐ C

☐ D ☐ E ☐ F ☐ G ☐ H ☐ I ☐ J

MATERIALS

CASING: | IMPELLER: | DIFF.:

SHAFT: | SLEEVE: | DIAPH:

LABYRINTH: | GASKETS:

SEALS | ROT. FACE | STA. FACE

ALARMS & SHUTDOWNS

CONTACTS FURNISHED FOR:	ALARM	SHUTDOWN
LOW LUBE OIL PRESS.	☐	☐
LOW LUBE OIL LEVEL	☐	☐
HIGH OIL FILTER Δ P	☐	☐
HIGH GAS DISCH. TEMP.	☐	☐
HIGH J.W. DISCH. TEMP.	☐	☐
HIGH INLET AIR FILTER Δ P	☐	☐
HIGH VIBRATION	☐	☐

FOR ALARM CONTACTS SHALL: ☐ OPEN ☐ CLOSE

FOR SHUTDOWN CONTACT SHALL: ☐ OPEN ☐ CLOSE

REMOTE SHUTDOWN: ☐ ELEC. ☐ PNEUM. ☐ HYDR.

CONTROLS

☐ A. SUCT. THROTTLE-VALVE & BLOW-OFF VALVE

☐ B. MODULATING BLOW-OFF VALVE

☐ C. MODULATING SUCT. THROTTLE VALVE

☐ D. MODULATING DISCH. THROTTLE VALVE

☐ E. SELECTOR SWITCH

☐ F. STARTUP, ALL MOVES: ☐ UNLOADED ☐ LOADED

☐ G. PRESS. SW. LOAD PSIG. UNLOAD PSIG

☐ H. AUTO. MTR. OVERLOAD PROTECTION

☐ I. SW. ENCL. NEMA: | CONT. PANELS, NEMA

☐ J. CONTROLS & ALARMS: V/PH/HZ:

☐ K. CONTROLS & ALARMS: PRESSURE: PSIG

APPROXIMATE WEIGHTS | COMP. & BASE: | DRIVER: | OTHER:

CODE REQUIREMENTS & SPECS:

REMARKS:

9413227.0848

UNITED ENGINEERS & CONSTRUCTORS A Raytheon Company Western Operations	EQUIPMENT DATA SHEET ☒ CDR ☐ TITLE I ☐ TITLE II ☐ TITLE III	ITEM NUMBER DR-12-301	PAGE 1 OF 1

CUSTOMER & LOCATION	PROJECT	UE&C JOB NO. 6237.006	DATE: 04/28/92
DOE-RL/WHC HANFORD, WA	WRAP FACILITY MODULE 2A	ACCOUNT NO.	BY: KDV

REVISIONS (DATE & BY)	A		B		C		D	
	E		F		G		H	

SERVICE	MANUFACTURER	NO. REQ'D.	SOURCE OF QUOTE
INSTRUMENT AIR DRYER PACKAGE		1	

CONDITIONS OF SERVICE

MODEL & TYPE: DESICCANT DRYER

ENTERING CONDITIONS:

FLUID DRYED: AIR
SP.GR. AT 60°F: 1.0
QUANTITY SCFM (14.7 PSIA & 60°F): 200
OPERATING PRESS. PSIA: 139.7
MAX. OPER. PRESS., PSIA: 164.7
DESIGN PRESS., PSIG: 150

ENTERING TEMP. °F: 85
GAS SATURATED AT ENTERING TEMP.: ☒ YES ☐ NO
IF NOT SATURATED
RELATIVE HUMIDITY, % RH _____ @ _____ °F
ABSOLUTE HUMIDITY, #/CU.FT. _____

EFFLUENT CONDITONS:

EXIT DEW POINT: -40°F @ _____ PSIA
EXIT ABSOLUTE HUMIDITY, GRAINS/# DRY AIR: _____
EXIT DRY BULB TEMPERATURE °F: _____

OPERATION

DRYING REQUIRED: ☒ CONTINUOUSLY ☐ INTERMITTENTLY
IF INTERMITTENTLY, HOURS: _____ ON _____ OFF
IF CONTINUOUSLY, HOURS: _____ DRYING _____ REGENERATING _____ COOLING
MAX. CAPACITY SCFM @ 60°F & 14.7 PSIA: 250 SCFM @100 PSIG AND 100°F (EXCLUDING PURGE)

TYPE REGENERATION: ☐ OPEN ☐ HEAT ☐ CLOSED ☒ HEATLESS ☒ PURGE ☐ REFRIGERATION ☐ BLOWER

DESSICANT: TYPE ACTIVATED ALUMINA
QUANTITY PER TOWER _____

CONTROLS: ☒ AUTOMATIC ☐ SEMI-AUTOMATIC ☐ MANUAL
UNIT PRESSURE DROP, PSI: _____
PURGE FLOW, SCFM: 30 SCFM

UTILITIES

ELECTRICAL:
115 VOLTS. 1 PHASE 60 CYCLE
STEAM:
W.P. _____ PSIG. _____ °F
SUPERHEAT
FUEL GAS:
_____ BTU/CU.FT. _____ PSIG

COLLING WATER:
_____ PSIG. _____ °F. _____ GPM
SOURCE OF HEAT FOR REGENERATION
☐ ELECTRICITY. ☐ STEAM. ☐ GAS
OTHER: PURGE AIR
QUANTITY: 30 SCFM

ELECTRICAL SPECS:
☐ NEMA TYPE I ☐ NEMA TYPE VII ☐ OTHER
STANDARD INDOOR EXPLOSION PROOF

MOTOR: HP _____ PH _____ BY _____
TYPE: _____
FRAME: _____

DESIGN DATA

SPACE REQUIRED FOR UNIT: _____

NO. REQUIRED: 1 SIZE EACH: _____ MATERIAL: _____
CODE REQUIREMENTS: ASME SECTION VIII DIV. 1 PSVs SET @150 PSIG ON EACH DRYER

REMARKS:
1. CONNECTIONS FOR INLET AND OUTLET ARE
2. PACKAGE INCLUDES: DIFFERENTIAL PRESSURE GAUGES, OPERATION SEQUENCE LIGHTS, TOWER PRESSURE GAUGES AND PRESSURE SAFETY VALVES, ELECTRICAL TIMED DRYER VALVES (2) AND VENT VALVES (2), (2) EXHAUST MUFFLERS AND CONTROL PANEL.
3. ALL COMPONENTS MOUNTED, PIPED AND WIRED.

UNITED ENGINEERS & CONSTRUCTORS A Raytheon Company Western Operations	EQUIPMENT DATA SHEET ☒ CDR ☐ TITLE I ☐ TITLE II ☐ TITLE III	ITEM NUMBER F-12-301A,B	PAGE 1 OF 1

CUSTOMER & LOCATION	PROJECT	UE&C JOB NO. 6237.006	DATE: 04/29/92
DOE-RL/WHC HANFORD, WA	WRAP FACILITY MODULE 2A	ACCOUNT NO.	BY: KDV

REVISIONS (DATE & BY)	A		B		C		D	
	E		F		G		H	

SERVICE	MANUFACTURER	NO. REQ'D.	SOURCE OF QUOTE
INSTRUMENT AIR PREFILTER		2	

OPERATING CONDITIONS

FLUID FILTERED: AIR
FLOW RATE - NORMAL: 200 SCFM
MAXIMUM: 250 SCFM @ 100 PSIG
INLET TEMPERATURE: 85 °F
INLET PRESSURE: 125 PSIG
SPECIFIC GRAVITY AT INLET TEMP.: 1.0
VISCOSITY AT INLET TEMP.: 0.02 CP

MAX. ALLOWABLE ΔP - CLEAN: _____ PSI
DIRTY: _____ PSI
TYPE OF SOLIDS: _____
FILTRATION REQUIRED: _____
REMOVE: _____

MATERIALS AND DESIGN

TYPE: COALESCING
NUMBER OF CARTRIDGES: _____
CARTRIDGE SIZE: _____
FILTERING MEDIA: _____
FILTERING AREA: _____
DESIGN PRESSURE: 150 PSIG
DESIGN TEMPERATURE: 150 °F
CODE: _____

CONNECTIONS: FILTER SERVICE INDICATOR
INLET: 1.5" THREADER
OUTLET: 1.5" THREADER
DRAINS: AUTOMATIC FLOAT TYPE VALVE
PRESSURE GAUGES: REQUIRED
RELIEF VALVE: _____
RELIEF VALVE SETTING: _____

CASE AND COVER	TYPE COVER	GASKETS	FILTER MATERIAL	CENTER CORE
CAST IRON	SINGLE BOLT	TEFLON	COTTON	PHENOLIC
STEEL	MULTIPLE BOLT	ASBESTOS	CELULOSE ACETATE	HARD RUBBER
304ss	SWING BOLT	LEAD	GLASS FIBER	304ss
316ss	LIFTING SCREW	NEOPRENE	NYLON	316ss
BRASS	HANDWHEEL	VELEMOID	JUTE	
BRONZE		TEFLON-ASBES.	PAPER	

REMARKS:

9413227.0850

UNITED ENGINEERS & CONSTRUCTORS A Raytheon Company Western Operations	EQUIPMENT DATA SHEET ☒ CDR ☐ TITLE I ☐ TITLE II ☐ TITLE III	ITEM NUMBER F-12-302	PAGE 1 OF 1

CUSTOMER & LOCATION	PROJECT	UE&C JOB NO. 6237.006	DATE: 04/29/92
DOE-RL/WHC HANFORD, WA	WRAP FACILITY MODULE 2A	ACCOUNT NO.	BY: KDV

REVISIONS (DATE & BY)	A		B		C		D	
	E		F		G		H	

SERVICE	MANUFACTURER	NO. REQ'D.	SOURCE OF QUOTE
INSTRUMENT AIR AFTER FILTER		1	

OPERATING CONDITIONS

FLUID FILTERED: AIR
FLOW RATE - NORMAL: 200 SCFM
MAXIMUM: 415 SCFM @ 100 PSIG
INLET TEMPERATURE: 100°F
INLET PRESSURE: 125 PSIG
SPECIFIC GRAVITY AT INLET TEMP.: 1.0
VISCOSITY AT INLET TEMP.: 0.02 CP

MAX. ALLOWABLE ΔP - CLEAN: PSI
DIRTY: PSI
TYPE OF SOLIDS: DESSICANT DUST
FILTRATION REQUIRED: 0.5 MICRON
REMOVE:

MATERIALS AND DESIGN

TYPE: PARTICULATE
NUMBER OF CARTRIDGES:
CARTRIDGE SIZE:
FILTERING MEDIA:
FILTERING AREA:
DESIGN PRESSURE: 150 PSIG
DESIGN TEMPERATURE: 150°F
CODE:

CONNECTIONS:
INLET: 1.5" THREADER
OUTLET: 1.5" THREADER
DRAINS: REQUIRED
PRESSURE GAUGES: REQUIRED
RELIEF VALVE:
RELIEF VALVE SETTING:

CASE AND COVER	TYPE COVER	GASKETS	FILTER MATERIAL	CENTER CORE
CAST IRON	SINGLE BOLT	TEFLON	COTTON	PHENOLIC
STEEL	MULTIPLE BOLT	ASBESTOS	CELULOSE ACETATE	HARD RUBBER
304ss	SWING BOLT	LEAD	GLASS FIBER	304ss
316ss	LIFTING SCREW	NEOPRENE	NYLON	316ss
BRASS	HANDWHEEL	VELEMOID	JUTE	
BRONZE		TEFLON-ASBES.	PAPER	

REMARKS:

9413227.0851

UNITED ENGINEERS & CONSTRUCTORS A Raytheon Company Western Operations	EQUIPMENT DATA SHEET ☒ CDR ☐ TITLE I ☐ TITLE II ☐ TITLE III	ITEM NUMBER U-12-301	PAGE 1 OF 1

CUSTOMER & LOCATION	PROJECT	UE&C JOB NO. 6237.006	DATE: 04/30/92
DOE-RL/WHC HANFORD, WA	WRAP FACILITY MODULE 2A	ACCOUNT NO.	BY: KDV

REVISIONS (DATE & BY)	A		B		C		D	
	E		F		G		H	

SERVICE	MANUFACTURER	NO. REQ'D.	SOURCE OF QUOTE
NITROGEN GENERATION PACKAGE		1	

NITROGEN GENERATION PACKAGE

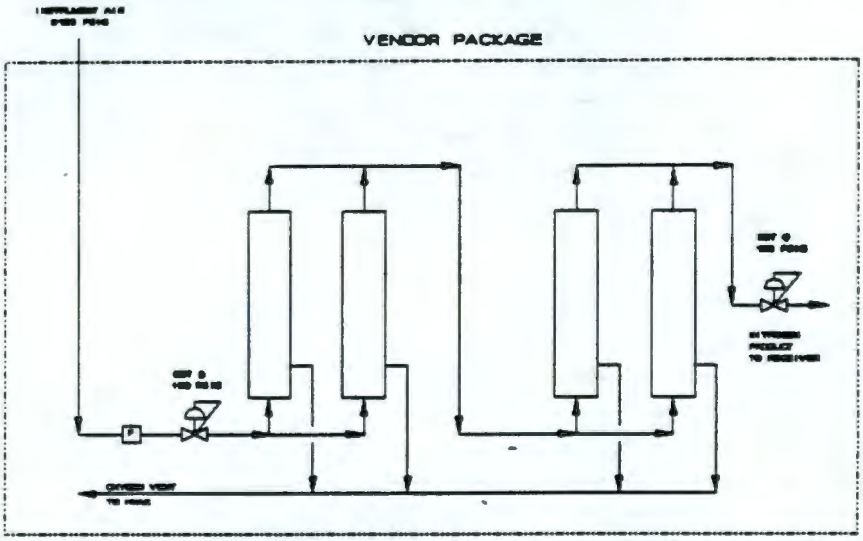

CONDITIONS OF SERVICE		DIMENSIONS	
APPLICATION: SEMI-PERMEABLE MEMBRANE MULTI-BED UNIT		A:	F:
PRODUCT: 4.0 SCFM NITROGEN W/2% OR LESS OXYGEN CONTENT, 70-100 PSIG @125 PSIG		B:	G:
FEED: 12.8 SCFM INSTRUMENT AIR		C:	H:
DESIGN: 150 PSIG @150°F		D:	I:
		E:	J:
CONSTRUCTION			
WALL MOUNTED CABINET WITH THE FOLLOWING:			
- 0.1 MICRON FILTER-REG WITH AUTO DRAIN TRAP @100 PSIG			
- AIR PRESSURE GAUGE			
- 0.01 MICRON FILTER W\AUTO DRAIN TRAP			
- AIR PRESSURE SAFETY VALVE @150 PSIG			
- MEMBRANE SEPARATORS			
- HEATER AND TEMPERATURE GAUGE			
- NITROGEN PRESSURE GAUGE			
- THROTTLING ROTOMETER			
- NITROGEN PRODUCT PRESSURE REG @100 PSIG			

9413227.0852

NO. VESSELS REQ'D. (☐ HORIZ - ☒ VERT.) 1	CUSTOMER: DOE-RL/WHC
SHELL DIA. ☒ I.D. - ☐ O.D.: 4'-6"	PROJECT: WRAP FACILITY MODULE 2A
SHELL THICKNESS:	LOCATION: HANFORD, WA
HEADS THICKNESS:	☒ CDR ☐ TITLE I ☐ TITLE II ☐ TITLE III
SHELL & HEAD THICKNESS INCLUDE C.A:	
SHELL LENGTH (SEAM TO SEAM): 11'-0" SS	
SUPPORT:	

ITEM NO. V-12-301

CODE: ASME SECT VIII DESIGN CONDITIONS:

	OPER.	DESIGN	ALLOW.
PRESS. (PSIG)	125	150	
TEMP. (°F)	100	150	

CORR. ALLOW. SHELL: HEADS:

X-RAY: STRESS RELIEF:

WINDLOAD:

SEISMIC ZONE: UBC SEISMIC ZONE 2B

MATERIALS

HEADS: CARBON STEEL

SHELL: CARBON STEEL

NOZZLES & FLANGES: CARBON STEEL

GASKETS:

NOZZLES &	NO.	SIZE-RATING-FACE
1. AIR INLET	1	
2. AIR OUTLET	1	
3. PSV/VENT	1	
4. PRESS INDICATOR	1	
5. PRESS SWITCH	1	
6. DRAIN	1	
7		
8.		
9.		
10.		
11.		
12.		
13.		
14.		
15.		

INTERNALS & ACCESSORIES	FURNISHED BY VESSEL PAD.	FURNISHED BY OTHERS
FILTER ELEM.		
PACKING		
INSUL. RINGS		
LADDERS & PLATFORMS		

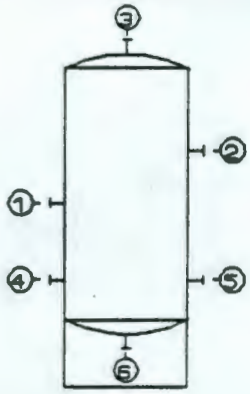

NOTES: 1. ALL COUPLING 6000#, UNLESS OTHERWISE
2. CAPACITY: 1,500 GALLONS
3. PRESS INDICATOR, PSV SET @150 PSIG, MANUAL DRAIN VALVE INCLUDED (ALL SHIPPED LOOSE)

NO.	DATE	BY	REVISIONS

VESSEL: INSTUMENT AIR RECEIVER

FOR:

PLANT:

LOCATION:

ORDER NO.: ITEM NO.: V-12-301

MFGR.:

DATE: 04/29/92 BY: KDV

UNITED ENGINEERS & CONSTRUCTORS
A Raytheon Company
Western Operations

NO. VESSELS REQ'D. (☐ HORIZ - ☒ VERT.) 1	CUSTOMER: DOE-RL/WHC	ITEM NO. V-12-302
SHELL DIA. ☒ I.D. - ☐ O.D.: 24"	PROJECT: WRAP FACILITY MODULE 2A	
SHELL THICKNESS:	LOCATION: HANFORD, WA	
HEADS THICKNESS: 2:1 SE	☒ CDR ☐ TITLE I ☐ TITLE II ☐ TITLE III	
SHELL & HEAD THICKNESS INCLUDE C.A:		
SHELL LENGTH (SEAM TO SEAM): 7'-0"		
SUPPORT:		
CODE: DESIGN CONDITIONS:		

	OPER.	DESIGN	ALLOW.
PRESS. (PSIG)	100	150	
TEMP. (°F)	100	150	

CORR. ALLOW. SHELL: HEADS:

X-RAY: STRESS RELIEF:

WINDLOAD:

MATERIALS

HEADS: CARBON STEEL

SHELL: CARBON STEEL

NOZZLES & FLANGES: CARBON STEEL

GASKETS:

NOZZLES &	NO.	SIZE-RATING-FACE
1. N_2 INLET	1	
2. N_2 OUTLET	1	
3. DRAIN	1	
4. SAFETY VALVE	1	
5. VENT	1	
6. PRESS INDICATOR	1	
7		
8.		
9.		
10.		
11.		
12.		
13.		
14.		
15.		

INTERNALS & ACCESSORIES	FURNISHED BY VESSEL PAD.	FURNISHED BY OTHERS
FILTER ELEM.		
PACKING		
INSUL. RINGS		
LADDERS & PLATFORMS		

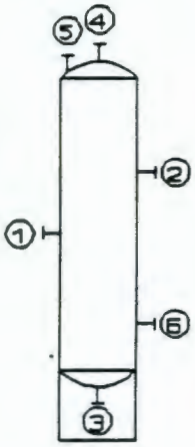

NOTES:
1. ALL COUPLING 6000#, UNLESS OTHERWISE
2. CAPACITY: 180 GALLONS
3. PRESS INDICATOR, PSV SET @ 150 PSIG, MANUAL DRAIN AND VENT VALVES INCLUDED

NO.	DATE	BY	REVISIONS

VESSEL: NITROGEN RECEIVER

FOR:

PLANT:

LOCATION:

ORDER NO.: ITEM NO.: V-12-301

MFGR.:

DATE: 04/30/92 BY: KDV

UNITED ENGINEERS & CONSTRUCTORS
A Raytheon Company
Western Operations

9413227.0854

THIS PAGE INTENTIONALLY
LEFT BLANK

SECTION 15575

9/14 3227.0855

THIS PAGE INTENTIONALLY
LEFT BLANK

WRAP MODULE 2A

SPECIFICATION SECTION
FOR
15575 STACKS (HVAC)

TABLE OF CONTENTS

PART 1 GENERAL

1.01 SECTION SCOPE
1.02 RELATED SECTIONS
1.03 REFERENCES
1.04 SYSTEM DESCRIPTION
1.05 SUBMITTALS
1.06 DELIVERY, STORAGE AND HANDLING
1.07 SITE CONDITIONS

PART 2 PRODUCTS

2.01 MANUFACTURERS
2.02 MATERIALS
2.03 EQUIPMENT
2.04 COMPONENTS
2.05 FABRICATION
2.06 SHOP QUALITY CONTROL

PART 3 EXECUTION

3.01 PREPARATION
3.02 ERECTION, INSTALLATION AND APPLICATION
3.03 FIELD QUALITY CONTROL
3.04 ADJUSTING AND CLEANING
3.05 DEMONSTRATION
3.06 PROTECTION

APPENDIX

APPENDIX A DATA SHEETS

WRAP MODULE 2A

SECTION 15575

STACKS (HVAC)

PART 1 GENERAL

1.01 SECTION SCOPE

A. This specification establishes the requirements for detailed design, fabrication, installation, start-up and acceptance testing of the stack which is part of process exhaust air system and provide other necessary safety items that are included in the work scope.

1.02 RELATED SECTIONS

1.03 REFERENCES

A. American Society for Testing and Materials (ASTM)

B. American Society of Heating, Refrigeration and Air Conditioning Engineers (ASHRAE)

C. American Welding Society, (AWS)
AWS D1.1 "Structural Welding Code"

D. National Fire Protection Association (NFPA)
NFPA - 211

1.04 SYSTEM DESCRIPTION

A. Exhaust stack shall be provided to discharge plant Zone I and II ventilation and off-gas system exhaust air.

B. Data Sheets

Equipment Tag Nos. WBS Area Location Numbers and equipment data sheets for this description are provided in **Appendix A.**

PART 2 PRODUCTS

2.02 MATERIALS

A. All materials and manufactured items shall be new and of first quality and shall be designed and furnished in

9413227.0857

strict accordance with all of the governing codes, ordinances and applicable standards.

END OF SECTION

9413227.0858

WRAP MODULE 2A

APPENDIX A

EQUIPMENT/INSTRUMENT DATA SHEETS

WBS LOCATION	EQUIPMENT TAG	SERVICE
1114	XS-14-101	

9413227.0859

APRIL 1992

UE&C PROJECT NO. 6237.006

FILE NO. 15575 - A1

UNITED ENGINEERS & CONSTRUCTORS A Raytheon Company Western Operations	EQUIPMENT DATA SHEET ☒ CDR ☐ TITLE I ☐ TITLE II ☐ TITLE III	ITEM NUMBER XS-14-101	PAGE 1 OF 2
CUSTOMER & LOCATION DOE-RL/WHC HANFORD, WA	PROJECT WRAP FACILITY MODULE 2A	UE&C JOB NO. 6237.006 ACCOUNT NO.	DATE: 06/08/92 BY: JMK

REVISIONS (DATE & BY)	A		B		C		D	
	E		F		G		H	

SERVICE	MANUFACTURER	NO. REQ'D.	SOURCE OF QUOTE
STACK FOR EXHAUST AIR PROCESS SYSTEM		1	

EXHAUST STACK DATA SHEET

1. **Service:** Process and room exhaust air @ approximately 75°F.
2. **Quantity:** 1 each
3. **Size:** 72" DIA x 68'-0" HIGH. Two duct sections connected by flanged joint at 34'-0" above concrete pad. Provide flanged "Y" 72" DIA inlet duct at plus approximately 20'-0" above pad.
4. **Mounting:** Bolted to concrete pad outside and supported with (8 each) guywires. Anchored to ground.
5. **Capacity:** 72,000 ACFM
6. **Construction:** 3/8" thick 300 series stainless steel
7. **Stack Flow and Radiation Monitor Flange** Provide 4 each sample parts of 6" DIA ANSI welded vertical face steel pipe flanges at centerline plus 40'-0" above concrete pad. Pipe shall be 90° welded "T", 6" DIA x 10" long, schedule 40, ANSI A55.
8. Man platform welded in place around stack with caged ladder. Floor shall be approximately 55'-10" above concrete pad. Caged ladder shall extend from pad up to platform, and design shall conform to CFR 29, OSHA 1910.27. Platform shall be of 30" wide with 36" high handrail provide 6' clear pull space in front of sample port flanges, outward from stack.
9. **Flushing Drain:** Provide water tight, sloped steel sealoff sheet at bottom of stack with valved drain pipe.
10. **Structural Design:** Per UBC, zone 2B. Shall include effects of Von Karman vortex shedding and natural vibration frequencies of stack. Design calculations by a professional structural engineer, Washington State, shall be submitted for review.

9413227.0860

UNITED ENGINEERS & CONSTRUCTORS A Raytheon Company Western Operations	EQUIPMENT DATA SHEET ☒ CDR ☐ TITLE I ☐ TITLE II ☐ TITLE III	ITEM NUMBER XS-14-101	PAGE 2 OF 2
CUSTOMER & LOCATION DOE-RL/WHC HANFORD, WA	PROJECT WRAP FACILITY MODULE 2A	UE&C JOB NO. 6237.006 / ACCOUNT NO.	DATE: 06/08/92 / BY: JMK

REVISIONS (DATE & BY)	A		B		C		D	
	E		F		G		H	

SERVICE	MANUFACTURER	NO. REQ'D.	SOURCE OF QUOTE
STACK FOR EXHAUST AIR PROCESS SYSTEM		1	

EXHAUST STACK

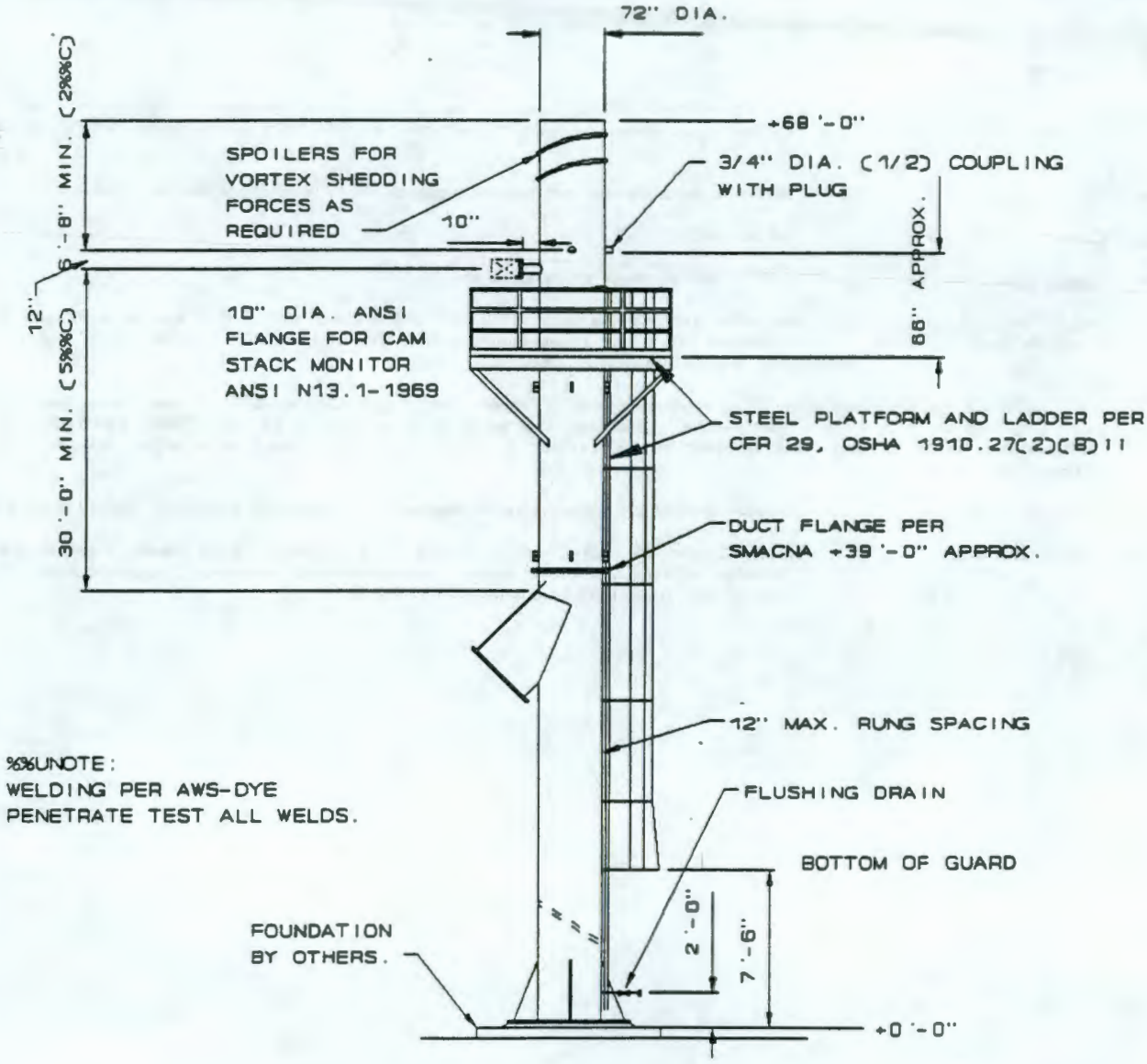

1. DESIGN STACK FREE STANDING. D=72" DIA., H=68'-0".
2. STRUCTURAL DESIGN PER UBC, ZONE 2B.
   STRUCTURAL DESIGN SHALL INCLUDE EFFECTS OF VON KARMAN VORTEX SHEDDING, AND NATURAL VIBRATION FREQUENCIES OF STACK
   DESIGN CALCULATIONS BY P.E. SHALL BE SUBMITTED FOR REVIEW
3. MATERIAL FOR STACK SHALL BE 3/8" THICK MIN. 300 SERIES STAINLESS STEEL.

SECTION 15682

9H3227.0862

THIS PAGE INTENTIONALLY
LEFT BLANK

WRAP MODULE 2A

SPECIFICATION SECTION
FOR
15682 WATER COOLED CHILLERS (HVAC)

TABLE OF CONTENTS

PART 1 GENERAL

1.01 SECTION SCOPE
1.02 RELATED SECTIONS
1.03 REFERENCES
1.04 SYSTEM DESCRIPTION
1.05 SUBMITTALS
1.06 DELIVERY, STORAGE AND HANDLING
1.07 SITE CONDITIONS

PART 2 PRODUCTS

2.01 MANUFACTURERS
2.02 MATERIALS
2.03 EQUIPMENT
2.04 COMPONENTS
2.05 FABRICATION
2.06 SHOP QUALITY CONTROL

PART 3 EXECUTION

3.01 PREPARATION
3.02 ERECTION, INSTALLATION AND APPLICATION
3.03 FIELD QUALITY CONTROL
3.04 ADJUSTING AND CLEANING
3.05 DEMONSTRATION
3.06 PROTECTION

APPENDIX

APPENDIX A DATA SHEETS

94 7227.0863

WRAP MODULE 2A

SECTION 15682

WATER COOLED CHILLERS (HVAC)

PART 1 GENERAL

1.01 SECTION SCOPE

A. This specification establishes the requirements for detailed design, fabrication, installation, start-up, and acceptance testing of the chillers which are part of the chilled water system and provide other necessary safety items that are included in the work scope.

1.02 RELATED SECTIONS

1.03 REFERENCES

A. National Electric Code (NEC)

B. National Electric Manufacturers' Association (NEMA)

C. Underwriters Laboratories (UL)

1.04 SYSTEM DESCRIPTION

A. Chillers shall be provided to generate chilled water required for facility cooling. Chilled water shall be pumped to respective coils located in air handler.

B. Data Sheets

Equipment Tag Nos. WBS Area Location Numbers and equipment data sheets for this description are provided in **Appendix A.**

PART 2 PRODUCTS

2.02 MATERIALS

A. All materials and manufactured items shall be new and of first quality and shall be designed and furnished in strict accordance with all of the governing codes, ordinances and applicable standards.

END OF SECTION

9413227.0864

WRAP MODULE 2A

APPENDIX A

EQUIPMENT/INSTRUMENT DATA SHEETS

WBS LOCATION	EQUIPMENT TAG	SERVICE
1114	CH-14-101A,B	Chilled Glycol
1112	CH-12-501A,B	Process Chiller

9417227.0865

APRIL 1992

UE&C PROJECT NO. 6237.006

FILE NO. 15682 - A2

UNITED ENGINEERS
& CONSTRUCTORS
A Raytheon Company

Western Operations

CUSTOMER: DOE-RL/WHC
PROJECT: WRAP FACILITY MODULE 2A
LOCATION: HANFORD, WA

ITEM NO.: CH-14-101A,B
ACCT.:
UE&C JOB: 6237.006
PAGE: 1 OF 1
DATE: 06/08/92 BY: JPJ

SERVICE: CHILLERS - CHILLED WATER SYSTEM NO. REQ'D.: 2
REVISIONS: A BY B BY C BY D BY
MANUFACTURER: MODEL: SIZE: 200 TON TYPE:
SOURCE: QUOTATION NO.: DATE:

CHILLER - PACKAGE

Chiller with control panel to be mounted on skids with a weather proof enclosure.

System: 45% Glycol, 200 refrigerated tones, chilled water temperature 42°F Lev., 200 HP each, 52°F ent., Condenser Water--Temp. 85° Lev., 100° Ent.

NOTE: 1. Based on water cooled Rotary Screw Chiller.

2. Control panel to have contact points for central computer control system (4-20 ma).

3. Condensing section based on CFC-22 refrigerant.

4. Furnish starter with chiller package.

9413227.0866

UNITED ENGINEERS & CONSTRUCTORS A Raytheon Company Western Operations	EQUIPMENT DATA SHEET ☒ CDR ☐ TITLE I ☐ TITLE II ☐ TITLE III	ITEM NUMBER CH-12-501A.B	PAGE 1 OF 1

CUSTOMER & LOCATION	PROJECT	UE&C JOB NO. 6237.006	DATE: 05/01/92
DOE-RL/WHC HANFORD, WA	WRAP FACILITY MODULE 2A	ACCOUNT NO.	BY: KDV

REVISIONS (DATE & BY)	A		B		C		D	
	E		F		G		H	

SERVICE	MANUFACTURER	NO. REQ'D.	SOURCE OF QUOTE
PROCESS CHILLER		2	

PROCESS CHILLER

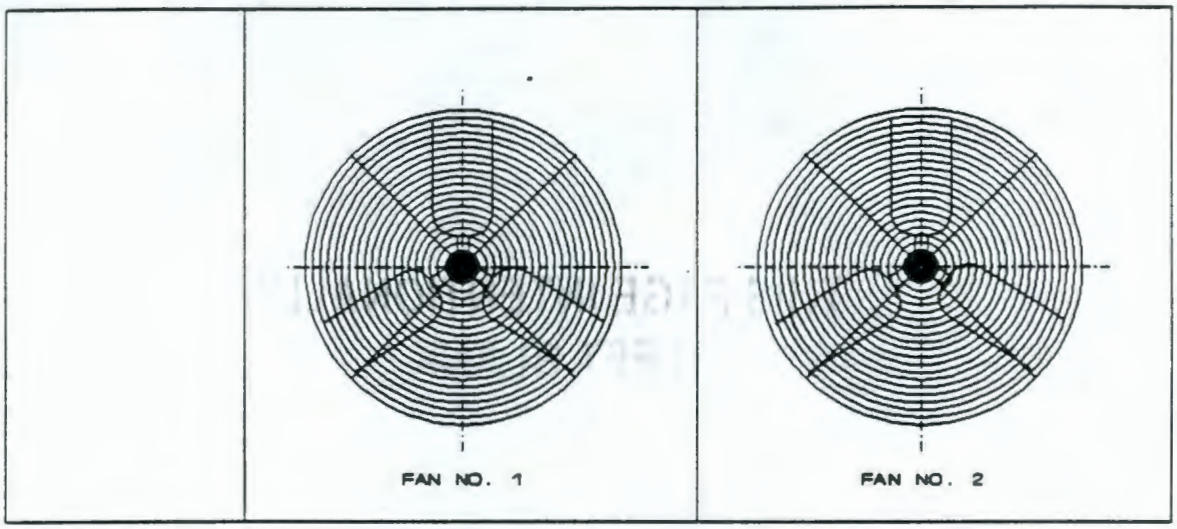

CONDITIONS OF SERVICE		DIMENSIONS	
PACKAGE CHILLER	EVAPORATOR CHILLED WATER	A:	F:
REFRIG DUTY: 5 TONS	FLOW RATE: 4.5 GPM (EACH EVAPORATOR)	B:	G:
REFRIGERANT: R-22	CHILLED WATER: 45% PROPYLENE GLYCOL; 55% WATER BY WEIGHT	C:	H:
COMPRESSOR: ONE STAGE RECIPROCATING	ENTERING TEMP: 57°F	D:	I:
CONDENSER DUTY: 84,000 BTU/HR	OUTLET TEMP: 42°F	E:	J:
CONDENSER TYPE: AIR COOLED	OPER PRESS: 35 PSIG		
CONDENSER TEMP: 120°F (110°F OUTSIDE AIR)	LIQUID GRAVITY: 1.04		
EVAPORATORS: 2	LIQUID VISCOSITY: 10 CP		
DUTY: 30,000 BTU/HR (EACH)	LIQ SPEC HT: 0.875 BTU/LB°F		
EVAPORATOR TEMP: 20°F			
CONSTRUCTION			
SKID MOUNTED WITH CONTROL PANEL, MOTOR STARTER AND GAGES			

9413227.0867

THIS PAGE INTENTIONALLY
LEFT BLANK

SECTION 15700

94/3227.0868

THIS PAGE INTENTIONALLY
LEFT BLANK

WRAP MODULE 2A

SPECIFICATION SECTION
FOR
15700 COOLING TOWER (HVAC)

TABLE OF CONTENTS

PART 1 GENERAL

1.01 SECTION SCOPE
1.02 RELATED SECTIONS
1.03 REFERENCES
1.04 SYSTEM DESCRIPTION
1.05 SUBMITTALS
1.06 DELIVERY, STORAGE AND HANDLING
1.07 SITE CONDITIONS

PART 2 PRODUCTS

2.01 MANUFACTURERS
2.02 MATERIALS
2.03 EQUIPMENT
2.04 COMPONENTS
2.05 FABRICATION
2.06 SHOP QUALITY CONTROL

PART 3 EXECUTION

3.01 PREPARATION
3.02 ERECTION, INSTALLATION AND APPLICATION
3.03 FIELD QUALITY CONTROL
3.04 ADJUSTING AND CLEANING
3.05 DEMONSTRATION
3.06 PROTECTION

APPENDIX

APPENDIX A DATA SHEETS

9411227.0869

WRAP MODULE 2A

SECTION 15700

COOLING TOWER

PART 1 GENERAL

1.01 SECTION SCOPE

A. This specification establishes the requirements for detailed design, fabrication, installation, start-up, and acceptance testing of cooling tower and other necessary safety items that are included in the work scope.

1.02 RELATED SECTIONS

1.03 REFERENCES

A. American Society of Testing and Materials (ASTM)

B. National Fire Protection Association (NFPA)

C. National Electric Code (NEC)

D. American National Standards Institute (ANSI)

1.04 SYSTEM DESCRIPTION

A. Cooling tower shall provide condenser water to the chillers for heat rejection. Condenser pumps shall be utilized to pump condensed water from the cooling tower to the chillers.

B. Data Sheets

Equipment Tag Nos. WBS Area Location Numbers and equipment data sheets for this description are provided in **Appendix A.**

END OF SECTION

9413227.0870

WRAP MODULE 2A

APPENDIX A

EQUIPMENT/INSTRUMENT DATA SHEETS

WBS LOCATION	EQUIPMENT TAG	SERVICE
1114	CT-14-101	

94/3227.0871

APRIL 1992

UE&C PROJECT NO. 6237.006

FILE NO. 15700 - A1

UNITED ENGINEERS & CONSTRUCTORS A Raytheon Company Western Operations	EQUIPMENT DATA SHEET ☒ CDR ☐ TITLE I ☐ TITLE II ☐ TITLE III	ITEM NUMBER CT-14-101	PAGE 1 OF 2

CUSTOMER & LOCATION	PROJECT	UE&C JOB NO. 6237.006	DATE: 06/08/92
DOE-RL/WHC HANFORD, WA	WRAP FACILITY MODULE 2A	ACCOUNT NO.	BY: JPJ

REVISIONS (DATE & BY)	A		B		C		D	
	E		F		G		H	

SERVICE	MANUFACTURER	NO. REQ'D.	SOURCE OF QUOTE
EVAPORATOR COOLING TOWER		1	

PERFORMANCE DATA

TOWER TYPE: DRAFT/FLOW _____ °F
DESIGN WET BULB TEMP. 50' UPWIND OF TOWER 68 °F
DESIGN WET BULB 5' FROM LOUVERS _____ °F
DESIGN EXIT AIR WET BULB _____ °F
WATER TEMPERATURE (HOT) 100°F W/45% GLYCOL °F
WATER TEMPERATURE (COLD) 85°F W/45% GLYCOL °F
DESIGN WATER CIRCULATION _____ GPM
DESIGN HEAT TRANSFER DUTY _____ BTU/HR
DESIGN WIND VELOCITY _____ MPH
ELEVATION ABOVE SEA LEVEL 710 FT
PERFORMANCE WITH FANS NOT IN OPERATION _____ GPM
(NATURAL DRAFT) _____ TEMP: ON/OFF
MINIMUM ATMOSPHERIC TEMP _____ °F

GENERAL NOTES:

1. TOWER ENCLOSED W/PREFAB PANELS TO FORM A WEATHER TIGHT ENCLOSURE.
2. TOWER RATED AT 400 REFRIGERATED TONS.
3. FANS (2 EA) TO HAVE 10 HP 2-SPEED MOTORS.
4. UNIT TO HAVE FULLY INTEGRATED CONTROL PANEL WITH LOW VOLTAGE CONTACTS TO RECEIVE CENTRAL CONTROL SYSTEM.
5. TOWER SUMP TO HANDLE 1,200 GPM.

OPERATING DATA

ELECTRIC POWER AVAILABLE 460/3 V/~/0
STEAM SUPPLY _____ PSIG/°F
EXHAUST _____ PSIG/°F
PUMPING POWER COSTS _____ $/HYD.HP/HR.
FAN POWER COSTS _____ $/KWH
PAYOUT PERIOD _____ HR.
BASIN COSTS _____ $/FT²

TOWER DATA

MANUFACTURER'S MODEL _____
NO. OF CELLS _____
CELL SIZE _____ FT. X FT.
OVERALL LENGTH/WIDTH _____ FT./FT.
HT. OVERALL ABOVE BASIN CURB _____ FT.
HT. OF DISTRIB. NOZZLES ABOVE BASIN CURB _____ FT.
NOZZLE PRESSURE LOSS _____ PSI
TYPE WATER DISTRIB. SYSTEM _____
COLUMN LEG EXTENTION BELOW BASIN CURB _____
(MFR. STD.) _____ IN.
DRIFT LOSS (% CIRCULATION) _____ %
TYPE OF ELIMINATORS _____
HEIGHT OF FILLING _____ FT.
VOL. SPRAY CHAMBER TOTAL _____ FT.³
TOTAL EFFECTIVE COOLING VOL. _____ FT.³
EFFECTIVE SPLASH SURFACE TOTAL _____ FT.²
EFFECTIVE WETTED SURFACE TOTAL _____ FT.²
EFFECTIVE CROSS SECTION AREA TOTAL _____ FT.²
WATER FLOW PER EFFECTIVE AREA _____ GPM/FT.²
LINEAL VELOCITY OF AIR (EMPTY TOWER) _____ FPS
NO. & SIZE OF RETURN CONNS. _____
COIL SHED REQUIRED _____
HEIGHT OF COIL SHED _____ FT.
WIDTH OF BAYS _____ FT.
NO. OF BAYS _____
LENGTH OF COOLING COILS _____ FT.

UNITED ENGINEERS & CONSTRUCTORS A Raytheon Company Western Operations	EQUIPMENT DATA SHEET ☒ CDR ☐ TITLE I ☐ TITLE II ☐ TITLE III	ITEM NUMBER CT-14-101	PAGE 2 OF 2
CUSTOMER & LOCATION DOE-RL/WHC HANFORD, WA	PROJECT WRAP FACILITY MODULE 2A	UE&C JOB NO. 6237.006 ACCOUNT NO.	DATE: 06/08/92 BY: JPJ

REVISIONS (DATE & BY)	A		B		C		D	
	E		F		G		H	

SERVICE	MANUFACTURER	NO. REQ'D.	SOURCE OF QUOTE
COOLING TOWER - EVAPORATOR		1	

HVAC - CHILLED WATER

Performance Data

Design Wet Bulb 5' from Louvers	68°F.
Water Temperature (Hot)	100°F with 45 Percent Glycol
Water Temperature (Cold)	85°F with 45 percent Glycol

Cooling Tower (Tower Rated at 400 Refrigerated Tons)

1. 2 speed 10 HP each motor-propeller fans
2. With electric panel and control
3. 1,200 GPM, 45 Percent Propylene Glycol

9413227.0873

THIS PAGE INTENTIONALLY
LEFT BLANK

SECTION 15760

94A3227.0874

THIS PAGE INTENTIONALLY
LEFT BLANK

THIS PAGE INTENTIONALLY
LEFT BLANK

WRAP MODULE 2A

SPECIFICATION SECTION
FOR
15760 LIQUID HEAT TRANSFER

TABLE OF CONTENTS

PART 1 GENERAL

1.01 SECTION SCOPE
1.02 RELATED SECTIONS
1.03 REFERENCES
1.04 SYSTEM DESCRIPTION
1.05 SUBMITTALS
1.06 DELIVERY, STORAGE AND HANDLING
1.07 SITE CONDITIONS

PART 2 PRODUCTS

2.01 MANUFACTURERS
2.02 MATERIALS
2.03 EQUIPMENT
2.04 COMPONENTS
2.05 FABRICATION
2.06 SHOP QUALITY CONTROL

PART 3 EXECUTION

3.01 PREPARATION
3.02 ERECTION, INSTALLATION AND APPLICATION
3.03 FIELD QUALITY CONTROL
3.04 ADJUSTING AND CLEANING
3.05 DEMONSTRATION
3.06 PROTECTION

APPENDIX

APPENDIX A DATA SHEETS

9417277.0875

WRAP MODULE 2A

SECTION 15760

LIQUID HEAT TRANSFER

PART 1 GENERAL

1.01 SECTION SCOPE

A. This specification establishes the requirements for detailed design, fabrication, installation, start-up, and acceptance testing of coils, valves, expansion tanks, air separators, piping and other necessary mechanical equipment for the heat transfer system and provide other necessary safety items that are included in the work scope.

1.02 RELATED SECTIONS

1.03 REFERENCES

A. American National Standards Institute (ANSI)

B. American Society of Mechanical Engineers (ASME)
ASME Boiler and Pressure Vessel Code
Section XIII, Division I, Pressure Vessels

C. American Society of Testing and Materials (ASTM)

1.04 SYSTEM DESCRIPTION

A. Liquid heat transfer equipment shall be utilized for required functional design of hydronic system. Cooling coils shall be provided for plant cooling and heat recovery.

B. Data Sheets

Equipment Tag Nos. WBS Area Location Numbers and equipment data sheets for this description are provided in **Appendix A.**

PART 2 PRODUCTS

2.02 MATERIALS

A. All materials and manufactured items shall be new and of first quality and shall be designed and furnished in

9413227.0876

strict accordance with all of the governing codes, ordinances and applicable standards.

END OF SECTION

9413227.0877

WRAP MODULE 2A

APPENDIX A

EQUIPMENT/INSTRUMENT DATA SHEETS

WBS LOCATION	EQUIPMENT TAG	SERVICE
1114	AS-14-101	Air Separator, Chilled Glycol System
1114	ET-14-101	Expansion Tank, Chilled Glycol System

9413227.0878

APRIL 1992

UE&C PROJECT NO. 6237.006

FILE NO. 15760 - A1

NO. VESSELS REQ'D. (☐ HORIZ - ☐ VERT.)	CUSTOMER: DOE-RL/WHC	ITEM NO. ET-14-101
SHELL DIA. ☐ I.D. - ☐ O.D.: 30"	PROJECT: WRAP FACILITY MODULE 2A	
SHELL THICKNESS:	LOCATION: HANFORD, WA	
HEADS THICKNESS:	☒ CDR ☐ TITLE I ☐ TITLE II ☐ TITLE III	
SHELL & HEAD THICKNESS INCLUDE C.A:		
SHELL LENGTH (SEAM TO SEAM): 72"		
SUPPORT:		
CODE: ASME SECTON VIII DESIGN CONDITIONS:		

	OPER.	DESIGN	ALLOW.
PRESS. (PSIG)		125	
TEMP. (°F)		350	

CORR. ALLOW. SHELL: HEADS:

X-RAY: STRESS RELIEF:

WINDLOAD:

MATERIALS

HEADS:

SHELL: GALVANIZED STEEL

NOZZLES & FLANGES:

GASKETS:

NOZZLES &	NO.	SIZE-RATING-FACE
1.		
2.		
3.		
4.		
5.		
6.		
7		
8.		
9.		
10.		
11.		
12.		
13.		
14.		
15.		

INTERNALS & ACCESSORIES	FURNISHED BY VESSEL PAD.	FURNISHED BY OTHERS
FILTER ELEM.		
PACKING		
INSUL. RINGS		
LADDERS & PLATFORMS		

NO.	DATE	BY	REVISIONS

NOTES: WEIGHT: 456 LBS

1. 180 GALLONS WITH SIGHT GLASS
2. WORKING PRESSURE - 30 PSI
3. MODEL NO. 202

VESSEL: EXPANSION TANK

FOR: CHILLED WATER SYSTEM

PLANT:

LOCATION:

ORDER NO.: 6237.006 ITEM NO.:

MFGR.:

DATE: 06/09/92 BY: JK

UNITED ENGINEERS & CONSTRUCTORS
A Raytheon Company
Western Operations

9413227.0879

NO. VESSELS REQ'D. (☐ HORIZ - ☐ VERT.) 1	CUSTOMER: DOE-RL/WHC	ITEM NO. AS-14-101
SHELL DIA. ☐ I.D. - ☐ O.D.: 16"	PROJECT: WRAP FACILITY MODULE 2A	
SHELL THICKNESS:	LOCATION: HANFORD, WA	
HEADS THICKNESS:	☒ CDR ☐ TITLE I ☐ TITLE II ☐ TITLE III	

SHELL & HEAD THICKNESS INCLUDE C.A:

SHELL LENGTH (SEAM TO SEAM): 36"

SUPPORT:

CODE: ASME SECTON VIII DESIGN CONDITIONS:

	OPER.	DESIGN	ALLOW.
PRESS. (PSIG)		125	
TEMP. (°F)		350	

CORR. ALLOW. SHELL: HEADS:

X-RAY: STRESS RELIEF:

WINDLOAD:

MATERIALS

HEADS:

SHELL: GALVANIZED STEEL

NOZZLES & FLANGES:

GASKETS:

NOZZLES &	NO.	SIZE-RATING-FACE
1.		
2.		
3.		
4.		
5.		
6.		
7		
8.		
9.		
10.		
11.		
12.		
13.		
14.		
15.		

INTERNALS & ACCESSORIES	FURNISHED BY VESSEL PAD.	FURNISHED BY OTHERS
FILTER ELEM.		
PACKING		
INSUL. RINGS		
LADDERS & PLATFORMS		

NOTES: WEIGHT: 220 LBS

1. 40 GPM

2. MODEL NO. R-5

NO.	DATE	BY	REVISIONS

VESSEL: AIR SEPARATOR

FOR: CHILLED WATER SYSTEM

PLANT:

LOCATION:

ORDER NO.: 6237.006 ITEM NO.:

MFGR.:

DATE: 06/09/92 BY: JK

UNITED ENGINEERS & CONSTRUCTORS
A Raytheon Company
Western Operations

SECTION 15800

PH 3227.0881

THIS PAGE INTENTIONALLY
LEFT BLANK

WRAP MODULE 2A

SPECIFICATION SECTION
FOR
15800 AIR DISTRIBUTION (HVAC)

TABLE OF CONTENTS

PART 1 GENERAL

1.01 SECTION SCOPE
1.02 RELATED SECTIONS
1.03 REFERENCES
1.04 SYSTEM DESCRIPTION
1.05 SUBMITTALS
1.06 DELIVERY, STORAGE AND HANDLING
1.07 SITE CONDITIONS

PART 2 PRODUCTS

2.01 MANUFACTURERS
2.02 MATERIALS
2.03 EQUIPMENT
2.04 COMPONENTS
2.05 FABRICATION
2.06 SHOP QUALITY CONTROL

PART 3 EXECUTION

3.01 PREPARATION
3.02 ERECTION, INSTALLATION AND APPLICATION
3.03 FIELD QUALITY CONTROL
3.04 ADJUSTING AND CLEANING
3.05 DEMONSTRATION
3.06 PROTECTION

APPENDIX

APPENDIX A DATA SHEETS

94N3227.0882

WRAP MODULE 2A

SECTION 15800

AIR DISTRIBUTION (HVAC)

PART 1 GENERAL

1.01 SECTION SCOPE

A. This specification establishes the requirements for detailed design, fabrication, installation, start-up and acceptance testing of ductwork, louvers, diffusers, fire dampers, volume dampers and VAV boxes which are part of the air system and provide other necessary safety items that are included in the work scope.

1.02 RELATED SECTIONS

1.03 REFERENCES

A. Sheet Metal and Air Conditioning Contractors National Association (SMACNA)

SMACNA - 87	Duct Construction Standard

B. Air Movement and Control Association (AMCA)

AMCA 99-86	Standards Handbook
AMCA Std. 500-85	Dampers and Louvers
AMCA Std. 210-85	Laboratory Method of Testing Fans for Rating

C. American Society of Testing and Materials (ASTM)

1.04 SYSTEM DESCRIPTION

A. Data Sheets

Equipment Tag Nos., WBS Area Location Numbers and equipment data sheets for this description are provided in **Appendix A.**

PART 2 PRODUCTS

2.02 MATERIALS

A. All materials and manufactured items shall be new and of first quality and shall be designed and furnished in

9413227.0883

strict accordance with all of the governing codes, ordinances and applicable standards.

END OF SECTION

9413227.0884

WRAP MODULE 2A

APPENDIX A

EQUIPMENT/INSTRUMENT DATA SHEETS

WBS LOCATION	EQUIPMENT TAG	SERVICE
1114	CB-14-401A-T	Cabinet Heater
1114	EH-14-301A,B	Unit Heater
1114	EH-14-302A-G	Unit Heater
1114	LV-14-101A-D	Wall Louver
1105	F-05-301A,B	Carbon Adsorber Prefilter
1105	F-05-302A,B	Vault Exhaust Filter

9413227.0885

UNITED ENGINEERS
& CONSTRUCTORS
A Raytheon Company

Western Operations

CUSTOMER: DOE-RL/WHC
PROJECT: WRAP FACILITY MODULE 2A
LOCATION: HANFORD, WA

ITEM NO.: CB-14-401A-T
ACCT.:
UE&C JOB: 6237.006
PAGE: 1 OF 1
DATE: 06/10/92 BY: JPJ

SERVICE: CABINET HEATER
NO. REQ'D.: 20
REVISIONS: A BY B BY C BY D BY
MANUFACTURER: MODEL: SIZE: TYPE:
SOURCE: QUOTATION NO.: DATE:

CABINET HEATER

350 CFM @ 0.25" S.P.

160/120V ELECTRIC WITH THERMOSTAT

KW

1/6 HP

9413227.0886

G:\BECKY\WP51\WRAP\CB14401A.RV0

UNITED ENGINEERS
& CONSTRUCTORS
A Raytheon Company

Western Operations

CUSTOMER: DOE-RL/WHC
PROJECT: WRAP FACILITY MODULE 2A
LOCATION: HANFORD, WA

ITEM NO.: EH-14-301A,B
ACCT.:
UE&C JOB: 6237.006
PAGE: 1 OF 1
DATE: 06/10/92 BY: JPJ

SERVICE: UNIT HEATER, CLEAN DRUM AREA
NO. REQ'D.: 2
REVISIONS: A BY B BY C BY D BY
MANUFACTURER: MODEL: SIZE: TYPE:
SOURCE: QUOTATION NO.: DATE:

UNIT HEATER

3,000 ACFM @ 0.5" S.P.

1/60/120V

25 KW

0.5 HP

9113227.0007

G:\BECKY\WP51\WRAP\EH14301A.RV0

UNITED ENGINEERS
& CONSTRUCTORS
A Raytheon Company

Western Operations

CUSTOMER: DOE-RL/WHC
PROJECT: WRAP FACILITY MODULE 2A
LOCATION: HANFORD, WA

ITEM NO.: EH-14-302A-G
ACCT.:
UE&C JOB: 6237.006
PAGE: 1 OF 1
DATE: 06/10/92 BY: JPJ

SERVICE: UNIT HEATER, TRANSFER CODE AND SHIPPING NO. REQ'D.: 7
REVISIONS: A BY B BY C BY D BY
MANUFACTURER: MODEL: SIZE: TYPE:
SOURCE: QUOTATION NO.: DATE:

UNIT HEATER

1,000 ACFM @ 0.5" S.P.

1/60/120V

8 KW

1/6 HP

9413227.0888

UNITED ENGINEERS
& CONSTRUCTORS
A Raytheon Company

Western Operations

CUSTOMER: DOE-RL/WHC
PROJECT: WRAP FACILITY MODULE 2A
LOCATION: HANFORD, WA

ITEM NO.: LV-14-101A,B,C,D
ACCT.:
UE&C JOB: 6237.006
PAGE: 1 OF 1
DATE: 06/10/92 BY: JPJ

SERVICE: WALL LOUVER, AIR INTAKE
NO. REQ'D.: 4
REVISIONS: A BY B BY C BY D BY
MANUFACTURER: MODEL: SIZE: TYPE:
SOURCE: QUOTATION NO.: DATE:

LOUVER

TYPE: ALL WEATHER (WITH BIRDSCREW)

MATERIAL: ALUMINUM (18 GAUGE)

CFM: 23,693 ACFM

S.P.: 0.05" WC

9413227.0889

UNITED ENGINEERS & CONSTRUCTORS A Raytheon Company Western Operations	EQUIPMENT DATA SHEET ☒ CDR ☐ TITLE I ☐ TITLE II ☐ TITLE III	ITEM NUMBER F-05-301A,B	PAGE 1 OF 1

CUSTOMER & LOCATION	PROJECT	UE&C JOB NO. 6237.006	DATE: 07/21/92
DOE-RL/WHC HANFORD, WA	WRAP FACILITY MODULE 2A	ACCOUNT NO.	BY: RLH

REVISIONS (DATE & BY)	A		B		C		D	
	E		F		G		H	

SERVICE	MANUFACTURER	NO. REQ'D.	SOURCE OF QUOTE
CARBON ADSORBER PREFILTER		2	

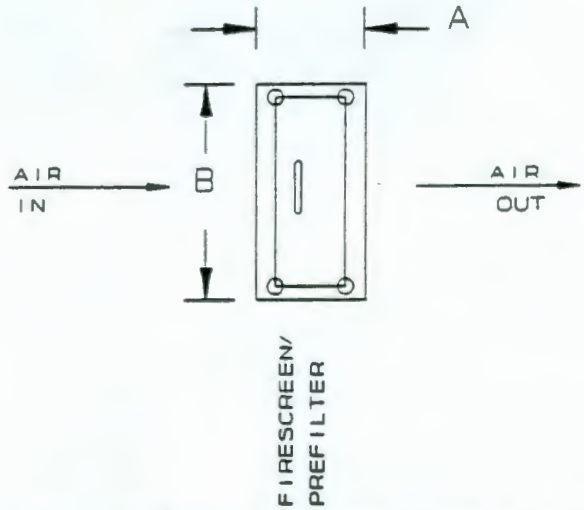

CONDITIONS OF SERVICE		DIMENSIONS	
APPLICATION: 700 ACFM, AIR WITH SOLVENT CHEMICAL FUMES, 60°F		A: 10"	F:
SIZE: 2'-0" X 2'-0" X 2" PREFILTER WITH FIRESCREEN		B: 2'-3"	G:
COMPONENTS: FIRESCREEN, PREFILTER	DUTY: 24 HRS/DAY	C:	H:
DESIGN TEMPERATURE: 150°F		D:	I:
DESIGN PRESS: -15" WC		E:	J:
LOCATION: ABOVE SOLVENT STORAGE TANK VAULT			
CONSTRUCTION			
CONSTRUCTION MATERIAL: 304 STAINLESS STEEL			
HOUSING: BAG-IN, BAG-OUT (1) SAMPLING PORT			
WEIGHT: 85 LBS			

9413227.0890

UNITED ENGINEERS & CONSTRUCTORS A Raytheon Company Western Operations	EQUIPMENT DATA SHEET ☒ CDR ☐ TITLE I ☐ TITLE II ☐ TITLE III	ITEM NUMBER F-05-302A,B	PAGE 1 OF 1

CUSTOMER & LOCATION	PROJECT	UE&C JOB NO. 6237.006	DATE: 07/21/
DOE-RL/WHC HANFORD, WA	WRAP FACILITY MODULE 2A	ACCOUNT NO.	BY: RLH

REVISIONS (DATE & BY)	A		B		C		D	
	E		F		G		H	

SERVICE	MANUFACTURER	NO. REQ'D.	SOURCE OF QUOTE
VAULT EXHAUST FILTER		2	

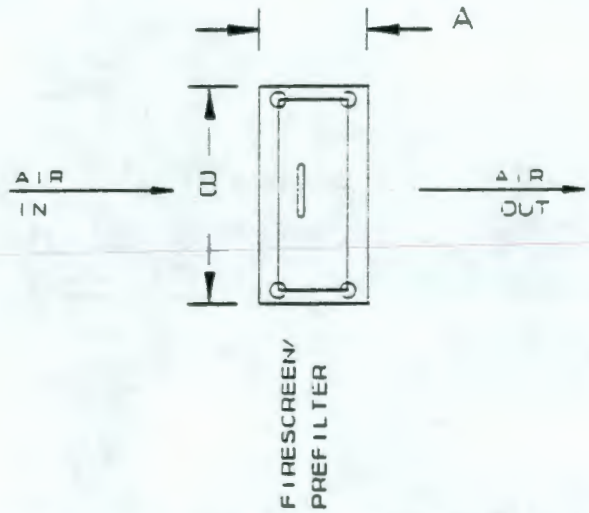

CONDITIONS OF SERVICE		DIMENSIONS	
APPLICATION: 700 ACFM, AIR WITH SOLVENT CHEMICAL FUMES, 60°F		A: 10"	F:
SIZE: 2'-0" X 2'-0" X 2" PREFILTER WITH FIRESCREEN		B: 2'-3"	G:
COMPONENTS: FIRESCREEN, PREFILTER	DUTY: 24 HRS/DAY	C:	H:
DESIGN TEMPERATURE: 150°F		D:	I:
DESIGN PRESS: -15" WC		E:	J:
LOCATION: ABOVE SOLVENT STORAGE TANK VAULT			
CONSTRUCTION			
CONSTRUCTION MATERIAL: 304 STAINLESS STEEL			
HOUSING: BAG-IN, BAG-OUT (1) SAMPLING PORT			
WEIGHT: 85 LBS			

9413227.0891

SECTION 15855

94-13227.0892

THIS PAGE INTENTIONALLY
LEFT BLANK

WRAP MODULE 2A

SPECIFICATION SECTION
FOR
15855 AIR HANDLING UNITS (HVAC)

TABLE OF CONTENTS

PART 1 GENERAL

1.01 SECTION SCOPE
1.02 RELATED SECTIONS
1.03 REFERENCES
1.04 SYSTEM DESCRIPTION
1.05 SUBMITTALS
1.06 DELIVERY, STORAGE AND HANDLING
1.07 SITE CONDITIONS

PART 2 PRODUCTS

2.01 MANUFACTURERS
2.02 MATERIALS
2.03 EQUIPMENT
2.04 COMPONENTS
2.05 FABRICATION
2.06 SHOP QUALITY CONTROL

PART 3 EXECUTION

3.01 PREPARATION
3.02 ERECTION, INSTALLATION AND APPLICATION
3.03 FIELD QUALITY CONTROL
3.04 ADJUSTING AND CLEANING
3.05 DEMONSTRATION
3.06 PROTECTION

APPENDIX

APPENDIX A DATA SHEETS

9413227.0893

WRAP MODULE 2A

SECTION 15855

AIR HANDLING UNITS (HVAC)

PART 1 GENERAL

1.01 SECTION SCOPE

A. This specification establishes the requirements for detailed design, fabrication, installation, start-up, and acceptance testing of air handling units which are a part of the air system and provide other necessary safety items that are included in the work scope.

1.02 RELATED SECTIONS

1.03 REFERENCES

A. Air Movement and Control Association (AMCA)
Amca Compliance

B. Air Conditioning and Refrigeration Institute (ARI)
ARI 430 Standard for Central-Station Air Handling Units

C. American Society of Heating, Refrigeration and Air Conditioning Engineers (ASHRAE)
ASHRAE 15 Safety Code for Mechanical Refrigeration

D. National Electric Code (NEC)

E. National Fire Protection Association (NFPA)
NFPA 90A Standard for the Installation of Air Conditioning and Ventilating Systems

PART 2 PRODUCTS

2.02 MATERIALS

A. All materials and manufactured items shall be new and of first quality and shall be designed and furnished in strict accordance with all of the governing codes, ordinances and applicable standards.

END OF SECTION

WRAP MODULE 2A

APPENDIX A

EQUIPMENT/INSTRUMENT DATA SHEETS

WBS LOCATION	EQUIPMENT TAG	SERVICE
1114	AH-14-101A,B,C,D	Make Up Air Handling Units, Process
1114	AH-14-201	Air Handling Unit, Change Room
1114	AH-14-301	Air Handling Unit, Shipping/ Receiving
1114	AH-14-401	Air Handling Unit, Administration Area
1114	AC-14-501A,B	Computer Room AC Unit
1114	AH-14-601	Air Handling Unit, HVAC Equipment Room
1114	SF-14-101A,B,C,D	Supply Fan Make Up Air Handling Unit, Process
1114	SF-14-201	Supply Fan Air Handling Unit, Change Room
1114	SF-14-301	Supply Fan, Air Handling Unit Shipping/ Receiving
1114	SF-14-401	Supply Fan Air Handling Unit Administration

9413227.0885

WRAP MODULE 2A

WBS LOCATION	EQUIPMENT TAG	SERVICE
1114	SF-14-601	Supply Fan Air Handling Unit, Equipment Room

9413227.0896

APRIL 1992

UE&C PROJECT NO. 6237.006

FILE NO. 15855 - A4

UNITED ENGINEERS & CONSTRUCTORS
A Raytheon Company
Western Operations

EQUIPMENT DATA SHEET

CUSTOMER: DOE-RL/WHC
PROJECT: WRAP FACILITY MODULE 2A
LOCATION: HANFORD, WA
☐ CDR ☐ TITLE I ☐ TITLE II ☐ TITLE III

ITEM NO. AH-14-101A,B,C,D
ACCT.
UE&C JOB 6237.006
PAGE 1 OF 1
DATE: 06/08/92 BY: JMK

SERVICE: MAKE UP AIR - PROCESS ZONE I & II NO. REQ'D. 4
REVISIONS: A BY B BY C BY D BY
MANUFACTURER MODEL SIZE TYPE
SOURCE QUOTATION NO. DATE:

FAN SECTION

FAN DATA

CFM: 23,693 OUT. VEL. FPM
RPM: BHP MAX. RPM
EXT. SP: 6.5 "WC: INT: SP "WC
VEL. PRESS "WC: TOT. PRESS 3.0 "WC
ROTATION: CCW ☐ CW: ☐ DISCHARGE
BLADE: FC ☐ BC ☐ AIR FOIL ☐
NO. OF FANS FAN DIA. TIP SPEED FPS
NOISE LEVEL

MOTOR DATA

HP 50 RPM ☐ 1 ☐ 2 SPEED
VOLTS 460 AMPS PHASE 3 CYCLE 60
DRIP PROOF ☐ TOT. ENCLOSED ☐ EXPLOSION PROOF ☐
MOTOR POSITION
DRIVE: BELT ☐ DIRECT ☐ ADJUSTABLE SHEAVE ☐
MOTOR FURNISHED BY
MOTOR MANUFACTURER
STARTER FURNISHED BY

HEATING COILS

PHYSICAL DATA	PRE-HEAT	RE-HEAT
SIZE		84" X 82"
TYPE FIN-TUBE		
ROWS	2	2
PASS		
CASING HEIGHT	82"	82"
TUBE LENGTH		
FACE AREA - SQ. FT (47.4)		36

RATING	PRE-HEAT	RE-HEAT
ENT. AIR TEMP °F	9°F	55°F
LEAV. AIR TEMP °F	55°F	75°F
TTL. LOAD MBH/HR	310 KW	200 KW
FACE VEL. - FPM	500	500
AIR FRICT. "WC	0.30	0.30
STM. PRES. - PSIG		
HOT WATER - GPM		
TEMP. - IN °F		
TEMP - OUT °F		
MAX. HEAD LOSS - FT.	5	5

METAL: COIL NICHROME FIN
SPECIAL COATINGS: GALVANIZED STEEL CASING
CONNECTIONS: SUPPLY: RETURN:
PRE-HEAT ☐ RH ☐ LH ☐ RH ☐ LH
RE-HEAT ☐ RH ☐ LH ☐ RH ☐ LH

ELECTRIC CONTRACTORS, AIRFLOW SWITCH AND SAFETY CUTOUTS WITH LOCAL PANEL

COOLING COIL

PHYSICAL DATA

SIZE 84" X 82" TYPE TUBE/FIN
TUBE FACE
TUBE LENGTH
FACE AREA SQ. FT. 47.4
METAL: COIL COPPER TUBE FIN COPPER
SPECIAL COATINGS GALVANIZED STEEL CASING

RATINGS

ENT. AIR DRY BULB 101 °F WET BULB 68 °F
LEAV. AIR DRY BULB °F WET BULB °F
SENSIBLE LOAD MBH TONS
TOTAL LOAD MBH 1,334 TONS
FACE VELOCITY - FPM 500
AIR FRICTION "WC 0.9" WC

DIRECT EXPANSION	ROWS	SOL. VALVE	EXP'N VALVE
	1ST CIR	TONS	TONS
	2ND CIR	TONS	TONS
SUC. TEMP. °F	TOTAL	VOLTS	☐ R-22: ☐ R-12

CHILLED WATER	GPM	HEAD LOSS	NO. OF ROWS
	334	5 FT.	6

HUMIDIFIER: 170 KW

CONNECTIONS: SUPPLY: ☐ RH ☐ LH ☐ RTN ☐ RH ☐ LH
4" DIA INLET/OUTLET

45% PROPYLENE GLYCOL
PROVIDE LOCAL CONTROL PANEL

FACE: ☐ FACE AND BYPASS ☐

BLADES: PARALLEL ☐ OPPOSED ☐
BLADES: PARALLEL ☐ OPPOSED ☐

FURNISHED BY
FURNISHED BY
1. ☐ 2. ☐ 3. ☐

FILTERS

30% PREFILTER

FLAT ☐ ANGLE ☐
THICKNESS IN.
THROWAWAY ☐ METAL ☐

80% FINAL

PRESSURE DROP "WC
FACE AREA FT²
CFM VEL. MAX.

VIBRATION ISOLATORS

NO. 6 EACH
TYPE SPRING/SNUBBER
FURNISHED BY

SPECIAL NOTES

ABOVE DATA COMPENSATED FOR 700 FT. ABOVE SEA LEVEL. UNIT WEIGHT LBS.

SUPPLY FAN LOCATED EXTERNAL TO A/H UNIT

9413227.0897

UNITED ENGINEERS & CONSTRUCTORS
A Raytheon Company
Western Operations

EQUIPMENT DATA SHEET

CUSTOMER DOE-RL/WHC
PROJECT WRAP FACILITY MODULE 2A
LOCATION HANFORD, WA
☐ CDR ☐ TITLE I ☐ TITLE II ☐ TITLE III

ITEM NO. AH-14-201
ACCT.
UE&C JOB 6237.006
PAGE 1 OF 1
DATE: 06/08/92 BY: JMK

SERVICE: SUPPLY-CHANGE ROOMS NO. REQ'D. 1
REVISIONS: A BY B BY C BY D BY
MANUFACTURER MODEL SIZE TYPE
SOURCE QUOTATION NO. DATE:

FAN SECTION

FAN DATA

CFM: 7,100 OUT. VEL. FPM
RPM: BHP MAX. RPM
EXT. SP: 4 "WC: INT: SP "WC
VEL. PRESS "WC: TOT. PRESS "WC
ROTATION: CCW ☐ CW: ☐ DISCHARGE
BLADE: FC ☐ BC ☐ AIR FOIL ☐
NO. OF FANS FAN DIA. TIP SPEED FPS
NOISE LEVEL

MOTOR DATA

HP 7.5 + 5 RPM ☐ 1 ☐ 2 SPEED
VOLTS AMPS PHASE 3 CYCLE
DRIP PROOF ☐ TOT. ENCLOSED ☐ EXPLOSION PROOF ☐
MOTOR POSITION
DRIVE: BELT ☐ DIRECT ☐ ADJUSTABLE SHEAVE ☐
MOTOR FURNISHED BY
MOTOR MANUFACTURER
STARTER FURNISHED BY

HEATING COILS

PHYSICAL DATA	PRE-HEAT	RE-HEAT	RATING	PRE-HEAT	RE-HEAT
SIZE NICHROME		48" x 42"	ENT. AIR TEMP °F		9°F
TYPE FIN-TUBE		ELECTRIC	LEAV. AIR TEMP °F		75°F
ROWS		150 KW	TTL. LOAD MBH/HR		512
PASS			FACE VEL. - FPM		500
CASING HEIGHT		42"	AIR FRICT. "WC		0.2
TUBE LENGTH			STM. PRES. - PSIG		
FACE AREA - SQ. FT		14.2	HOT WATER - GPM		
			TEMP. - IN °F		
			TEMP - OUT °F		
			MAX. HEAD LOSS - FT.		

METAL: COIL FIN
SPECIAL COATINGS: GALVANIZED STEEL (SUPPLY)
CONNECTIONS: SUPPLY: RETURN:
PRE-HEAT ☐ RH ☐ LH ☐ RH ☐ LH
RE-HEAT ☐ RH ☐ LH ☐ RH ☐ LH

COOLING COIL

PHYSICAL DATA

SIZE TYPE
TUBE FACE
TUBE LENGTH
FACE AREA SQ. FT.
METAL: COIL FIN
SPECIAL COATINGS

RATINGS

ENT. AIR DRY BULB 101 °F WET BULB 68 °F
LEAV. AIR DRY BULB °F WET BULB °F
SENSIBLE LOAD MBH 200 MPH TONS
TOTAL LOAD MBH TONS
FACE VELOCITY - FPM
AIR FRICTION "WC

DIRECT EXPANSION	ROWS	SOL. VALVE	EXP'N VALVE
	1ST CIR	TONS	TONS
	2ND CIR	TONS	TONS
SUC. TEMP. °F	TOTAL	VOLTS	☐ R-22: ☐ R-12

CHILLED WATER	GPM	HEAD LOSS	NO. OF ROWS
	50	10 FT.	6

45 PERCENT PROPYLENE GYCOL

CONNECTIONS: SUPPLY: ☐ RH ☐ LH ☐ RTN ☐ RH ☐ LH
2" DIA INPUT/OUTPUT

LOCAL CONTROL PANEL

FACE: ☐ FACE AND BYPASS ☐

BLADES: PARALLEL ☐ OPPOSED ☐
BLADES: PARALLEL ☐ OPPOSED ☐

FURNISHED BY
FURNISHED BY
1. ☐ 2. ☐ 3. ☐

FILTERS

30% PREFILTER: FLAT ☐ ANGLE ☐ THICKNESS IN. THROWAWAY ☐ METAL ☐

80% FINAL: PRESSURE DROP "WC FACE AREA FT² CFM VEL. MAX.

VIBRATION ISOLATORS

NO. 4
TYPE SPRING
FURNISHED BY

SPECIAL NOTES

ABOVE DATA COMPENSATED FOR 700 FT. ABOVE SEA LEVEL. UNIT WEIGHT LBS.
HEAT RECOVERY WHEEL 70% EFFICIENT

G:\BECKY\WP51\WRAP\AH14201.RV0

9413227.0880

UNITED ENGINEERS & CONSTRUCTORS
A Raytheon Company
Western Operations

EQUIPMENT DATA SHEET

CUSTOMER: DOE-RL/WHC
PROJECT: WRAP FACILITY MODULE 2A
LOCATION: HANFORD, WA
☐ CDR ☐ TITLE I ☐ TITLE II ☐ TITLE III

ITEM NO. AH-14-301
ACCT.
UE&C JOB 6237.006
PAGE 1 OF 1
DATE: 06/08/92 BY: JMK

SERVICE: SUPPLY-SHIPPING AND RECEIVING AND TRANSFER NO. REQ'D. 1
REVISIONS: A BY B BY C BY D BY
MANUFACTURER MODEL SIZE TYPE
SOURCE QUOTATION NO. DATE:

FAN SECTION

FAN DATA

CFM: 18,000 OUT. VEL. FPM
RPM: BHP MAX. RPM
EXT. SP: 4 "WC: INT: SP "WC
VEL. PRESS "WC: TOT. PRESS 30 "WC
ROTATION: CCW ☐ CW: ☐ DISCHARGE
BLADE: FC ☐ BC ☐ AIR FOIL ☐
NO. OF FANS FAN DIA. TIP SPEED FPS
NOISE LEVEL

MOTOR DATA

HP 20 RPM ☐ 1 ☐ 2 SPEED
VOLTS 460 AMPS PHASE 3 CYCLE
DRIP PROOF ☐ TOT. ENCLOSED ☐ EXPLOSION PROOF ☐
MOTOR POSITION
DRIVE: BELT ☐ DIRECT ☐ ADJUSTABLE SHEAVE ☐
MOTOR FURNISHED BY
MOTOR MANUFACTURER
STARTER FURNISHED BY

HEATING COILS

PHYSICAL DATA	PRE-HEAT	RE-HEAT
SIZE		72" X 72"
TYPE		
ROWS		
PASS		
CASING HEIGHT		72"
TUBE LENGTH		
FACE AREA - SQ. FT		36

RATING	PRE-HEAT	RE-HEAT
ENT. AIR TEMP °F		60°F
LEAV. AIR TEMP °F		75°F
TTL. LOAD MBH/HR		100 KW
FACE VEL. - FPM		500
AIR FRICT. "WC		0.2
STM. PRES. - PSIG		
HOT WATER - GPM		
TEMP. - IN °F		
TEMP - OUT °F		
MAX. HEAD LOSS - FT.		

METAL: COIL FIN
SPECIAL COATINGS: GALVANIZED STEEL
CONNECTIONS: SUPPLY: RETURN:
PRE-HEAT ☐ RH ☐ LH ☐ RH ☐ LH
RE-HEAT ☐ RH ☐ LH ☐ RH ☐ LH

HUMIDIFIER: 20 KW

COOLING COIL

PHYSICAL DATA

SIZE 72" X 72" TYPE TUBE-FIN
TUBE FACE
TUBE LENGTH
FACE AREA SQ. FT.
METAL: COIL FIN
SPECIAL COATINGS

PATINGS

ENT. AIR DRY BULB 98°F WET BULB 66°F
LEAV. AIR DRY BULB °F WET BULB °F
SENSIBLE LOAD MBH 400 TONS
TOTAL LOAD MBH TONS
FACE VELOCITY - FPM 500
AIR FRICTION "WC 0.9" WC

DIRECT EXPANSION	ROWS	SOL. VALVE	EXP'N VALVE
	1ST CIR	TONS	TONS
	2ND CIR	TONS	TONS
SUC. TEMP. °F	TOTAL	VOLTS	☐ R-22: ☐ R-12

CHILLED WATER GPM 100 HEAD LOSS 10 FT. NO. OF ROWS 6

45 PERCENT PROPYLENE GYCOL

CONNECTIONS: SUPPLY: ☐ RH ☐ LH ☐ RTN ☐ RH ☐ LH
2" DIA INPUT/OUTPUT

PROVIDE LOCAL CONTROL PANEL WITH UNIT

FACE: ☐ FACE AND BYPASS ☐

BLADES: PARALLEL ☐ OPPOSED ☐
BLADES: PARALLEL ☐ OPPOSED ☐

FURNISHED BY
FURNISHED BY
1. ☐ 2. ☐ 3. ☐

FILTERS

30% PREFILTER: FLAT ☐ ANGLE ☐ THICKNESS IN. THROWAWAY ☐ METAL ☐

80% FINAL: PRESSURE DROP "WC FACE AREA FT² CFM VEL. MAX.

VIBRATION ISOLATORS

NO.
TYPE SPRING/SNUBBER
FURNISHED BY

SPECIAL NOTES

ABOVE DATA COMPENSATED FOR 700 FT. ABOVE SEA LEVEL. UNIT WEIGHT LBS.

9413227.0899

UNITED ENGINEERS & CONSTRUCTORS
A Raytheon Company
Western Operations

EQUIPMENT DATA SHEET

CUSTOMER: DOE-RL/WHC
PROJECT: WRAP FACILITY MODULE 2A
LOCATION: HANFORD, WA
☐ CDR ☐ TITLE I ☐ TITLE II ☐ TITLE III

ITEM NO. AH-14-401
ACCT.
UE&C JOB 6237.006
PAGE 1 OF 1
DATE: 06/08/92 BY: JMK

SERVICE: SUPPLY-ADMINISTRATION AREA NO. REQ'D. 1
REVISIONS: A BY B BY C BY D BY
MANUFACTURER MODEL SIZE TYPE
SOURCE QUOTATION NO. DATE:

FAN SECTION

FAN DATA

CFM: 25,000 OUT. VEL. FPM
RPM: BHP MAX. RPM
EXT. SP: 3.5 "WC: INT: SP 3.5 "WC
VEL. PRESS "WC: TOT. PRESS 30 "WC
ROTATION: CCW ☐ CW: ☐ DISCHARGE
BLADE: FC ☐ BC ☐ AIR FOIL ☐
NO. OF FANS FAN DIA. TIP SPEED FPS
NOISE LEVEL

MOTOR DATA

HP 30 RPM ☐ 1 ☐ 2 SPEED
VOLTS 460 AMPS PHASE 3 CYCLE
DRIP PROOF ☐ TOT. ENCLOSED ☐ EXPLOSION PROOF ☐
MOTOR POSITION
DRIVE: BELT ☐ DIRECT ☐ ADJUSTABLE SHEAVE ☐
MOTOR FURNISHED BY
MOTOR MANUFACTURER
STARTER FURNISHED BY

HEATING COILS

PHYSICAL DATA	PRE-HEAT	RE-HEAT
SIZE		84" X 84"
TYPE FIN-TUBE		ELECTRIC
ROWS		
PASS		
CASING HEIGHT		
TUBE LENGTH		
FACE AREA - SQ. FT		

RATING	PRE-HEAT	RE-HEAT
ENT. AIR TEMP °F		60°F
LEAV. AIR TEMP °F		75°F
TTL. LOAD MBH/HR		120 KW
FACE VEL. - FPM		
AIR FRICT. "WC		
STM. PRES. - PSIG		
HOT WATER - GPM		
TEMP. - IN °F		
TEMP - OUT °F		
MAX. HEAD LOSS - FT.		

METAL: COIL FIN
SPECIAL COATINGS:
CONNECTIONS: SUPPLY: RETURN:
PRE-HEAT ☐ RH ☐ LH ☐ RH ☐ LH
RE-HEAT ☐ RH ☐ LH ☐ RH ☐ LH

HUMIDIFIER: 66 KW

COOLING COIL

PHYSICAL DATA

SIZE TYPE
TUBE FACE
TUBE LENGTH
FACE AREA SQ. FT.
METAL: COIL FIN
SPECIAL COATINGS

RATINGS

ENT. AIR DRY BULB °F WET BULB °F
LEAV. AIR DRY BULB °F WET BULB °F
SENSIBLE LOAD MBH TONS
TOTAL LOAD MBH TONS
FACE VELOCITY - FPM
AIR FRICTION "WC

DIRECT EXPANSION	ROWS	SOL. VALVE	EXP'N VALVE
	1ST CIR	TONS	TONS
	2ND CIR	TONS	TONS
SUC. TEMP. °F	TOTAL	VOLTS	☐ R-22: ☐ R-12

CHILLED WATER GPM
HEAD LOSS FT.
NO. OF ROWS
45 PERCENT PROPYLENE GYCOL

CONNECTIONS: SUPPLY: ☐ RH ☐ LH ☐ RTN ☐ RH ☐ LH

PROVIDE LOCAL CONTROL PANEL WITH UNIT

FACE: ☐ FACE AND BYPASS ☐
BLADES: PARALLEL ☐ OPPOSED ☐
FURNISHED BY

BLADES: PARALLEL ☐ OPPOSED ☐
FURNISHED BY

1. ☐ 2. ☐ 3. ☐

FILTERS

30% PREFILTER — 80% FINAL

FLAT ☐ ANGLE ☐
THICKNESS IN.
THROWAWAY ☐ METAL ☐

PRESSURE DROP "WC
FACE AREA FT²
CFM VEL. MAX.

VIBRATION ISOLATORS

NO.
TYPE SPRING/SNUBBER
FURNISHED BY

SPECIAL NOTES

ABOVE DATA COMPENSATED FOR 700 FT. ABOVE SEA LEVEL. UNIT WEIGHT LBS.

9413227.0900

UNITED ENGINEERS & CONSTRUCTORS
A Raytheon Company
Western Operations

EQUIPMENT DATA SHEET

CUSTOMER: DOE-RL/WHC
PROJECT: WRAP FACILITY MODULE 2A
LOCATION: HANFORD, WA
☐ CDR ☐ TITLE I ☐ TITLE II ☐ TITLE III

ITEM NO. AC-14-501A,B
ACCT.
UE&C JOB 6237.006
PAGE 1 OF 1
DATE: 06/08/92 BY: JMK

SERVICE: SUPPLY-CONTROL/COMPUTER ROOM NO. REQ'D. 2
REVISIONS: A BY B BY C BY D BY
MANUFACTURER MODEL SIZE TYPE
SOURCE QUOTATION NO. DATE:

FAN SECTION

FAN DATA

CFM: 4,000 OUT. VEL. FPM
RPM: BHP MAX. RPM
EXT. SP: .5 "WC: INT: SP "WC
VEL. PRESS "WC: TOT. PRESS "WC
ROTATION: CCW ☐ CW: ☐ DISCHARGE
BLADE: FC ☐ BC ☐ AIR FOIL ☐
NO. OF FANS FAN DIA. TIP SPEED FPS
NOISE LEVEL

MOTOR DATA

HP RPM ☐ 1 ☐ 2 SPEED
VOLTS AMPS PHASE CYCLE
DRIP PROOF ☐ TOT. ENCLOSED ☐ EXPLOSION PROOF ☐
MOTOR POSITION
DRIVE: BELT ☐ DIRECT ☐ ADJUSTABLE SHEAVE ☐
MOTOR FURNISHED BY
MOTOR MANUFACTURER
STARTER FURNISHED BY

HEATING COILS

PHYSICAL DATA	PRE-HEAT	RE-HEAT
SIZE		
TYPE FIN-TUBE		ELECTRIC
ROWS		15 KW
PASS		
CASING HEIGHT		
TUBE LENGTH		
FACE AREA - SQ. FT		

RATING	PRE-HEAT	RE-HEAT
ENT. AIR TEMP °F		
LEAV. AIR TEMP °F		
TTL. LOAD MBH/HR		52 KW
FACE VEL. - FPM		500
AIR FRICT. "WC		0.2
STM. PRES. - PSIG		
HOT WATER - GPM		
TEMP. - IN °F		
TEMP - OUT °F		
MAX. HEAD LOSS - FT.		

METAL: COIL FIN
SPECIAL COATINGS: GALVANIZED STEEL CASING
CONNECTIONS: SUPPLY: RETURN:
PRE-HEAT ☐ RH ☐ LH ☐ RH ☐ LH
RE-HEAT ☐ RH ☐ LH ☐ RH ☐ LH

HUMIDIFIER: 50 KW

COOLING COIL

PHYSICAL DATA

SIZE TYPE
TUBE FACE
TUBE LENGTH
FACE AREA SQ. FT.
METAL: COIL FIN
SPECIAL COATINGS

RATINGS

ENT. AIR DRY BULB °F WET BULB °F
LEAV. AIR DRY BULB °F WET BULB °F
SENSIBLE LOAD MBH TONS 7.5
TOTAL LOAD MBH TONS
FACE VELOCITY - FPM
AIR FRICTION "WC

DIRECT EXPANSION	ROWS	SOL. VALVE	EXP'N VALVE
	1ST CIR	TONS	TONS
	2ND CIR	TONS	TONS
SUC. TEMP. °F	TOTAL	VOLTS	☐ R-22: ☐ R-12

CHILLED WATER	GPM	HEAD LOSS	NO. OF ROWS
	25	10 FT.	6

45 PERCENT PROPYLENE GYCOL

CONNECTIONS: SUPPLY: ☐ RH ☐ LH ☐ RTN ☐ RH ☐ LH
1.5" DIA INPUT/OUTPUT

INFRARED HUMIDIFIER
PROVIDE LOCAL CONTROL PANEL

FACE: ☐ FACE AND BYPASS ☐

BLADES: PARALLEL ☐ OPPOSED ☐
BLADES: PARALLEL ☐ OPPOSED ☐

FURNISHED BY
FURNISHED BY

1. ☐ 2. ☐ 3. ☐

30% PREFILTER FILTERS **80% FINAL**

FLAT ☐ ANGLE ☐
THICKNESS IN.
THROWAWAY ☐ METAL ☐

PRESSURE DROP "WC
FACE AREA FT²
CFM VEL. MAX.

VIBRATION ISOLATORS

NO.
TYPE SPRING/SNUBBER
FURNISHED BY

SPECIAL NOTES

ABOVE DATA COMPENSATED FOR 700 FT. ABOVE SEA LEVEL. UNIT WEIGHT LBS.

9413227.0901

UNITED ENGINEERS & CONSTRUCTORS
A Raytheon Company
Western Operations

EQUIPMENT DATA SHEET

CUSTOMER: DOE-RL/WHC
PROJECT: WRAP FACILITY MODULE 2A
LOCATION: HANFORD, WA
☐ CDR ☐ TITLE I ☐ TITLE II ☐ TITLE III

ITEM NO. AH-14-601
ACCT.
UE&C JOB 6237.006
PAGE 1 OF 1
DATE: 06/08/92 BY: JMK

SERVICE: SUPPLY-EQUIPMENT ROOM NO. REQ'D. 1
REVISIONS: A BY B BY C BY D BY
MANUFACTURER MODEL SIZE TYPE
SOURCE QUOTATION NO. DATE:

FAN SECTION

FAN DATA

CFM: 30,200 OUT. VEL. FPM
RPM: BHP MAX. RPM
EXT. SP: "WC: INT: SP "WC
VEL. PRESS "WC: TOT. PRESS 3.0 "WC
ROTATION: CCW ☐ CW: ☐ DISCHARGE
BLADE: FC ☐ BC ☐ AIR FOIL ☐
NO. OF FANS FAN DIA. TIP SPEED FPS
NOISE LEVEL

MOTOR DATA

HP 30 RPM ☐ 1 ☐ 2 SPEED
VOLTS 460 AMPS PHASE 3 CYCLE
DRIP PROOF ☐ TOT. ENCLOSED ☐ EXPLOSION PROOF ☐
MOTOR POSITION
DRIVE: BELT ☐ DIRECT ☐ ADJUSTABLE SHEAVE ☐
MOTOR FURNISHED BY VARIABLE SPEED
MOTOR MANUFACTURER
STARTER FURNISHED BY

HEATING COILS

PHYSICAL DATA	PRE-HEAT	RE-HEAT	RATING	PRE-HEAT	RE-HEAT
SIZE		80" X 82"	ENT. AIR TEMP °F		
TYPE		ELECTRIC	LEAV. AIR TEMP °F		
ROWS			TTL. LOAD MBH/HR		160 KW
PASS			FACE VEL. - FPM		650
CASING HEIGHT		82"	AIR FRICT. "WC		0.2
TUBE LENGTH			STM. PRES. - PSIG		
FACE AREA - SQ. FT			HOT WATER - GPM		
			TEMP. - IN °F		–
			TEMP - OUT °F		
			MAX. HEAD LOSS - FT.		10

METAL: COIL FIN
SPECIAL COATINGS: GALVANIZED STEEL
CONNECTIONS: SUPPLY: RETURN:
PRE-HEAT ☐ RH ☐ LH ☐ RH ☐ LH
RE-HEAT ☐ RH ☐ LH ☐ RH ☐ LH

PROVIDE ELECTRIC COIL CONTROLS, AIRFLOW SWITCH, THERMAL CUTOUTS

COOLING COIL

PHYSICAL DATA

SIZE TYPE
TUBE FACE
TUBE LENGTH
FACE AREA SQ. FT.
METAL: COIL FIN
SPECIAL COATINGS

RATINGS

ENT. AIR DRY BULB °F WET BULB °F
LEAV. AIR DRY BULB °F WET BULB °F
SENSIBLE LOAD MBH TONS 7.5
TOTAL LOAD MBH TONS –
FACE VELOCITY - FPM
AIR FRICTION "WC

DIRECT EXPANSION	ROWS	SOL. VALVE	EXP'N VALVE
	1ST CIR	TONS	TONS
	2ND CIR	TONS	TONS
SUC. TEMP. °F	TOTAL	VOLTS	☐ R-22: ☐ R-12

CHILLED WATER	GPM	HEAD LOSS	NO. OF ROWS
		FT.	

45 PERCENT PROPYLENE GYCOL

CONNECTIONS: SUPPLY: ☐ RH ☐ LH ☐ RTN ☐ RH ☐ LH

HEATING/VENTILATING UNIT
PROVIDE LOCAL CONTROL PANEL

FACE: ☐ FACE AND BYPASS ☐

BLADES: PARALLEL ☐ OPPOSED ☐
BLADES: PARALLEL ☐ OPPOSED ☐

FURNISHED BY
FURNISHED BY
1. ☐ 2. ☐ 3. ☐

FILTERS

30% PREFILTER: FLAT ☐ ANGLE ☐ THICKNESS IN. THROWAWAY ☐ METAL ☐

68% FINAL: PRESSURE DROP "WC; FACE AREA FT²; CFM VEL. MAX.

VIBRATION ISOLATORS

NO.
TYPE
FURNISHED BY

SPECIAL NOTES

ABOVE DATA COMPENSATED FOR 700 FT. ABOVE SEA LEVEL. UNIT WEIGHT LBS.

G:\BECKY\WP51\WRAP\Ah14601.RV0

9413227.0902

UNITED ENGINEERS & CONSTRUCTORS A Raytheon Company Western Operations	EQUIPMENT DATA SHEET ☒ CDR ☐ TITLE I ☐ TITLE II ☐ TITLE III	ITEM NUMBER SF-14-101A,B,C,D	PAGE 1 OF 1
CUSTOMER & LOCATION DOE-RL/WHC HANFORD, WA	PROJECT WRAP FACILITY MODULE 2A	UE&C JOB NO. 6237.006 / ACCOUNT NO.	DATE: 05/15/92 / BY: MP

REVISIONS (DATE & BY)	A		B		C		D	
	E		F		G		H	

SERVICE: PROCESS EXHAUST HEPA FILTER UNIT	MANUFACTURER:	SOURCE OF QUOTE:
NO. FANS REQ'D: 1	SIZE & MODEL:	
NO. MOTORS REQ'D: 1	ITEM NO: PROVIDED BY: MTD. BY:	REF. PAGE:
NO. TURBINES REQ'D:	ITEM NO: PROVIDED BY: MTD. BY:	REF. PAGE:

CONDITIONS OF SERVICE, EACH FAN

FLUID HANDLED: AIR			BULK DENSITY:
COMPOSITION:			
PARTICULATES:	TYPE:	SIZE:	GRAINS/CU. FT.:
BAROMETER: 700 FT ALT PSIA	REL. HUMIDITY: %	CORR./EROS. CAUSED BY:	
TEMPERATURE, SUCTION: °F		TEMPERATURE DISCHARGE:	
SUCTION PRESS: (PSIA)("H_2OABS)	DISCH. PRESS: (PSIA)("H_2OABS)	FAN STATIC PRESS: 3.5 ("H_2OABS)	
CAPACITY, NORMAL @S.P.T.: ACFM		CAPACITY, DESIGN @S.P.T.: 23,693 ACFM	
CAPACITY, DESIGN & SUCTION CONDITIONS: ACFM			

SPECIFICATIONS

☐ SINGLE WIDTH, SINGLE INLET			☐ DOUBLE WIDTH, DOUBLE INLET	
ARRANGEMENT:			CLASS: UNCLASSIFIED	
INLET	SIZE:	RATING: LOCATION:	FAN SPEED NORMAL:	RPM
OUTLET	SIZE:	RATING: LOCATION:	FAN SPEED MAXIMUM:	RPM
MATERIALS CONSTRUCT	CASING:	IMP:	DESIGN CONDITIONS:	
	SHAFT:	SHAFT SLEEVE:	CUT. VEL. DESIGN: FPM OUT. VEL. MAX.:	FPM
PACKING	MFG:	TYPE: NO. RINGS:	CASE DESIGN PRESSURE:	PSIG
MECH. SEAL	MFG:	TYPE:	CASE DESIGN TEMPERATURE:	°F
COUPLING	MFG:	TYPE:	IMP. DIA. & TYPE:	
DAMPERS	☐ INLET	☐ OUTLET	ACCESS DOOR LOCATION:	
BEARINGS	☐ BALL	☐ SLEEVE ☐ ROLLER	☐ OIL LUBRICATED	☐ GREASE
COOLING	☐ WATER ☐ WATER-GLYCOL	GPM:	TEMP.: Δ T: °F	PRESSURE: PSIG
DRIVE TYPE	☐ DIRECT	☐ GEAR	☐ V-BELT	☐ DRIVE GUARD
DRIVER POSITION FOR V-BELT DRIVE (SEE SKETCH BELOW): ☐ W ☐ X ☐ Y ☐ Z				

MOTOR DRIVE

HP: 50	RPM:	FRAME:	VOLTS/PHASE/CYCLE: 460/3/60
MFR:		TYPE: SQUIRREL CAGE	NEMA DESIGN:
ENCLOSURE:		RATED AMBIENT TEMP: 40°C	INSUL. CLASS:
ELEVATION: FT.		FULL LOAD AMPS:	SPACE HEATERS:

GENERAL INFORMATION

APPROX.	FAN & BASE:	FAN:	MOTOR:	TURBINE:	GEAR:
INSP. REQ'D.:	☐ NON-WIT. PERF.		☐ WITNESSED PERF.		☐ SHOP TEST
	☐ DISMANT. & INSP. AFTER TEST		☐ OTHER:		
PERFORMANCE CURVE NO.:			DIMENSIONAL PRINT NO.:		
CODE REQUIREMENTS & SPECS.					

REMARKS: FANS ARE HOUSED IN AIR HANDLING UNITS AH-14-101A,B,C PURCHASED WITH A/H UNITS

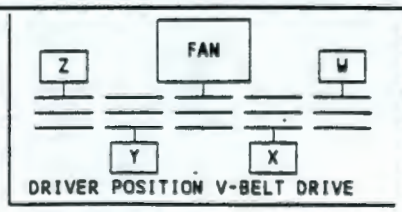

DRIVER POSITION V-BELT DRIVE

9413227.0903

UNITED ENGINEERS & CONSTRUCTORS A Raytheon Company Western Operations	EQUIPMENT DATA SHEET ☒ CDR ☐ TITLE I ☐ TITLE II ☐ TITLE III	ITEM NUMBER SF-14-201	PAGE 1 OF 1

CUSTOMER & LOCATION	PROJECT	UE&C JOB NO. 6237.006	DATE: 05/15/92
DOE-RL/WHC HANFORD, WA	WRAP FACILITY MODULE 2A	ACCOUNT NO.	BY: MP

REVISIONS (DATE & BY)	A		B		C		D	
	E		F		G		H	

SERVICE: LOCKER ROOM SUPPLY FAN	MANUFACTURER:	SOURCE OF QUOTE:
NO. FANS REQ'D: 1	SIZE & MODEL:	
NO. MOTORS REQ'D: 1	ITEM NO: PROVIDED BY: MTD. BY:	REF. PAGE:
NO. TURBINES REQ'D:	ITEM NO: PROVIDED BY: MTD. BY:	REF. PAGE:

CONDITIONS OF SERVICE, EACH FAN

FLUID HANDLED: AIR			BULK DENSITY:
COMPOSITION:			
PARTICULATES:	TYPE:	SIZE:	GRAINS/CU. FT.:
BAROMETER: 700 FT ALT PSIA	REL. HUMIDITY: %	CORR./EROS. CAUSED BY:	
TEMPERATURE, SUCTION: °F		TEMPERATURE DISCHARGE:	
SUCTION PRESS: (PSIA)("H_2OABS)	DISCH. PRESS: (PSIA)("H_2OABS)	FAN STATIC PRESS: 4" TSP ("H_2OABS)	
CAPACITY, NORMAL @S.P.T.: ACFM		CAPACITY, DESIGN @S.P.T.: 7,100 ACFM	
CAPACITY, DESIGN & SUCTION CONDITIONS: ACFM			

SPECIFICATIONS

☐ SINGLE WIDTH, SINGLE INLET				☐ DOUBLE WIDTH, DOUBLE INLET		
ARRANGEMENT:				CLASS: UNCLASSIFIED		
INLET	SIZE:	RATING:	LOCATION:	FAN SPEED NORMAL:		RPM
OUTLET	SIZE:	RATING:	LOCATION:	FAN SPEED MAXIMUM:		RPM
MATERIALS CONSTRUCT	CASING:	IMP:		DESIGN CONDITIONS:		-
	SHAFT:	SHAFT SLEEVE:		CUT. VEL. DESIGN:	FPM OUT. VEL. MAX.:	FPM
PACKING	MFG:	TYPE:	NO. RINGS:	CASE DESIGN PRESSURE:		PSIG
MECH. SEAL	MFG:	TYPE:		CASE DESIGN TEMPERATURE:		°F
COUPLING	MFG:	TYPE:		IMP. DIA. & TYPE:		
DAMPERS	☐ INLET	☐ OUTLET		ACCESS DOOR LOCATION:		
BEARINGS	☐ BALL	☐ SLEEVE	☐ ROLLER	☐ OIL LUBRICATED		☐ GREASE
COOLING	☐ WATER	☐ WATER-GLYCOL	GPM:	TEMP.:	Δ T: °F	PRESSURE: PSIG
DRIVE TYPE	☐ DIRECT		☐ GEAR	☐ V-BELT	☐ DRIVE GUARD	-
DRIVER POSITION FOR V-BELT DRIVE (SEE SKETCH BELOW): ☐ W ☐ X ☐ Y ☐ Z						-

MOTOR DRIVE

HP: 7.5	RPM:	FRAME:	VOLTS/PHASE/CYCLE: 460/3/60
MFR:		TYPE: SQUIRREL CAGE	NEMA DESIGN:
ENCLOSURE:		RATED AMBIENT TEMP: 40°C	INSUL. CLASS:
ELEVATION: FT.		FULL LOAD AMPS:	SPACE HEATERS:

GENERAL INFORMATION

APPROX.	FAN & BASE:	FAN:	MOTOR:	TURBINE:	GEAR:
INSP. REQ'D.:	☐ NON-WIT. PERF.		☐ WITNESSED PERF.		☐ SHOP TEST
	☐ DISMANT. & INSP. AFTER TEST		☐ OTHER:		
PERFORMANCE CURVE NO.:			DIMENSIONAL PRINT NO.:		
CODE REQUIREMENTS & SPECS.					

REMARKS: FAN IS HOUSED IN AIR HANDLING UNIT AH-14-201 PURCHASED WITH A/H UNIT

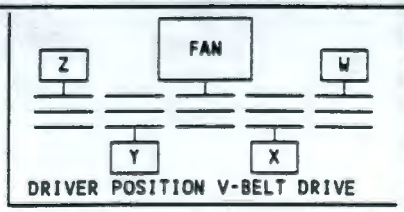

UNITED ENGINEERS & CONSTRUCTORS A Raytheon Company Western Operations	EQUIPMENT DATA SHEET ☒ CDR ☐ TITLE I ☐ TITLE II ☐ TITLE III	ITEM NUMBER SF-14-301	PAGE 1 OF 1

CUSTOMER & LOCATION	PROJECT	UE&C JOB NO. 6237.006	DATE: 05/15/92
DOE-RL/WHC HANFORD, WA	WRAP FACILITY MODULE 2A	ACCOUNT NO.	BY: MP

REVISIONS (DATE & BY)	A		B		C		D	
	E		F		G		H	

SERVICE: SUPPLY FAN	MANUFACTURER:	SOURCE OF QUOTE:
NO. FANS REQ'D: 1	SIZE & MODEL:	
NO. MOTORS REQ'D: 1	ITEM NO: PROVIDED BY: MTD. BY:	REF. PAGE:
NO. TURBINES REQ'D:	ITEM NO: PROVIDED BY: MTD. BY:	REF. PAGE:

CONDITIONS OF SERVICE, EACH FAN

FLUID HANDLED: AIR			BULK DENSITY:
COMPOSITION:			
PARTICULATES:	TYPE:	SIZE:	GRAINS/CU. FT.:
BAROMETER: PSIA	REL. HUMIDITY: %	CORR./EROS. CAUSED BY:	
TEMPERATURE, SUCTION: °F		TEMPERATURE DISCHARGE:	
SUCTION PRESS: (PSIA)("H_2OABS)	DISCH. PRESS: (PSIA)("H_2OABS)	FAN STATIC PRESS: 3" TSP ("H_2OABS)	
CAPACITY, NORMAL @S.P.T.: ACFM		CAPACITY, DESIGN @S.P.T.: 18,000 ACFM	
CAPACITY, DESIGN & SUCTION CONDITIONS:			ACFM

SPECIFICATIONS

☐ SINGLE WIDTH, SINGLE INLET				☐ DOUBLE WIDTH, DOUBLE INLET		
ARRANGEMENT:				CLASS: UNCLASSIFIED		
INLET	SIZE:	RATING:	LOCATION:	FAN SPEED NORMAL:		RPM
OUTLET	SIZE:	RATING:	LOCATION:	FAN SPEED MAXIMUM:		RPM
MATERIALS	CASING:	IMP:		DESIGN CONDITIONS:		
CONSTRUCT	SHAFT:	SHAFT SLEEVE:		CUT. VEL. DESIGN:	FPM OUT. VEL. MAX.:	FPM
PACKING	MFG:	TYPE:	NO. RINGS:	CASE DESIGN PRESSURE:		PSIG
MECH. SEAL	MFG:	TYPE:		CASE DESIGN TEMPERATURE:		°F
COUPLING	MFG:	TYPE:		IMP. DIA. & TYPE:		
DAMPERS	☐ INLET	☐ OUTLET		ACCESS DOOR LOCATION:		
BEARINGS	☐ BALL	☐ SLEEVE	☐ ROLLER	☐ OIL LUBRICATED		☐ GREASE
COOLING	☐ WATER	☐ WATER-GLYCOL	GPM:	TEMP.:	Δ T: °F	PRESSURE: PSIG
DRIVE TYPE	☐ DIRECT		☐ GEAR	☐ V-BELT	☐ DRIVE GUARD	
DRIVER POSITION FOR V-BELT DRIVE (SEE SKETCH BELOW): ☐ W ☐ X ☐ Y ☐ Z						

MOTOR DRIVE

HP: 20	RPM:	FRAME:	VOLTS/PHASE/CYCLE: 460/3/60
MFR:		TYPE: SQUIRREL CAGE	NEMA DESIGN:
ENCLOSURE:		RATED AMBIENT TEMP: 40°C	INSUL. CLASS:
ELEVATION: FT.		FULL LOAD AMPS:	SPACE HEATERS:

GENERAL INFORMATION

APPROX.	FAN & BASE:	FAN:	MOTOR:	TURBINE:	GEAR:
INSP. REQ'D.:	☐ NON-WIT. PERF.		☐ WITNESSED PERF.		☐ SHOP TEST
	☐ DISMANT. & INSP. AFTER TEST		☐ OTHER:		
PERFORMANCE CURVE NO.:			DIMENSIONAL PRINT NO.:		
CODE REQUIREMENTS & SPECS.					

REMARKS: FAN IS HOUSED IN AIR HANDLING UNIT AH-14-301 PURCHASED WITH A/H UNIT

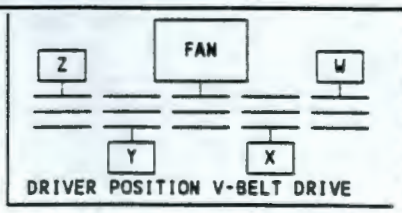

9413227.0905

UNITED ENGINEERS & CONSTRUCTORS A Raytheon Company Western Operations	EQUIPMENT DATA SHEET ☒ CDR ☐ TITLE I ☐ TITLE II ☐ TITLE III	ITEM NUMBER SF-14-401	PAGE 1 OF 1

CUSTOMER & LOCATION	PROJECT	UE&C JOB NO. 6237.006	DATE: 05/15/92
DOE-RL/WHC HANFORD, WA	WRAP FACILITY MODULE 2A	ACCOUNT NO.	BY: MP

REVISIONS (DATE & BY)	A		B		C		D	
	E		F		G		H	

SERVICE: SUPPLY FAN	MANUFACTURER:	SOURCE OF QUOTE:
NO. FANS REQ'D: 1	SIZE & MODEL:	
NO. MOTORS REQ'D: 1	ITEM NO: PROVIDED BY: MTD. BY:	REF. PAGE:
NO. TURBINES REQ'D:	ITEM NO: PROVIDED BY: MTD. BY:	REF. PAGE:

CONDITIONS OF SERVICE, EACH FAN

FLUID HANDLED: AIR			BULK DENSITY:
COMPOSITION:			
PARTICULATES:	TYPE:	SIZE:	GRAINS/CU. FT.:
BAROMETER: PSIA	REL. HUMIDITY: %	CORR./EROS. CAUSED BY:	
TEMPERATURE, SUCTION: °F		TEMPERATURE DISCHARGE:	
SUCTION PRESS: (PSIA)("H_2OABS)	DISCH. PRESS: (PSIA)("H_2OABS)	FAN STATIC PRESS: 3.5" TSP ("H_2OABS)	
CAPACITY, NORMAL @S.P.T.: ACFM		CAPACITY, DESIGN @S.P.T.: 25,000 ACFM	
CAPACITY, DESIGN & SUCTION CONDITIONS:			ACFM

SPECIFICATIONS

☐ SINGLE WIDTH, SINGLE INLET			☐ DOUBLE WIDTH, DOUBLE INLET	
ARRANGEMENT:			CLASS: UNCLASSIFIED	
INLET	SIZE: RATING:	LOCATION:	FAN SPEED NORMAL:	RPM
OUTLET	SIZE: RATING:	LOCATION:	FAN SPEED MAXIMUM:	RPM
MATERIALS CONSTRUCT	CASING: IMP:		DESIGN CONDITIONS:	
	SHAFT: SHAFT SLEEVE:		CUT. VEL. DESIGN: FPM OUT. VEL. MAX.:	FPM
PACKING	MFG: TYPE:	NO. RINGS:	CASE DESIGN PRESSURE:	PSIG
MECH. SEAL	MFG: TYPE:		CASE DESIGN TEMPERATURE:	°F
COUPLING	MFG: TYPE:		IMP. DIA. & TYPE:	
DAMPERS	☐ INLET ☐ OUTLET		ACCESS DOOR LOCATION:	
BEARINGS	☐ BALL ☐ SLEEVE	☐ ROLLER	☐ OIL LUBRICATED	☐ GREASE
COOLING	☐ WATER ☐ WATER-GLYCOL	GPM:	TEMP.:	Δ T: °F PRESSURE: PSIG
DRIVE TYPE	☐ DIRECT	☐ GEAR	☐ V-BELT	☐ DRIVE GUARD
DRIVER POSITION FOR V-BELT DRIVE (SEE SKETCH BELOW): ☐ W ☐ X ☐ Y ☐ Z				

MOTOR DRIVE

HP:	RPM:	FRAME:	VOLTS/PHASE/CYCLE: 460/3/60
MFR:		TYPE: SQUIRREL CAGE	NEMA DESIGN:
ENCLOSURE:		RATED AMBIENT TEMP: 40°C	INSUL. CLASS:
ELEVATION: FT.		FULL LOAD AMPS:	SPACE HEATERS:

GENERAL INFORMATION

APPROX.	FAN & BASE:	FAN:	MOTOR:	TURBINE:	GEAR:
INSP. REQ'D.:	☐ NON-WIT. PERF.		☐ WITNESSED PERF.		☐ SHOP TEST
	☐ DISMANT. & INSP. AFTER TEST		☐ OTHER:		
PERFORMANCE CURVE NO.:			DIMENSIONAL PRINT NO.:		
CODE REQUIREMENTS & SPECS.					

REMARKS: FAN IS HOUSED IN AIR HANDLING UNIT AH-14-401 PURCHASED WITH A/H UNIT

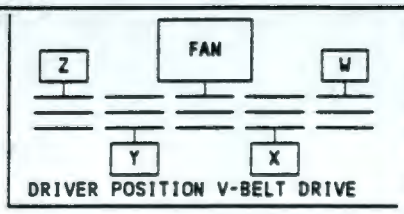

UNITED ENGINEERS & CONSTRUCTORS A Raytheon Company Western Operations	EQUIPMENT DATA SHEET ☒ CDR ☐ TITLE I ☐ TITLE II ☐ TITLE III	ITEM NUMBER SF-14-601	PAGE 1 OF 1

CUSTOMER & LOCATION	PROJECT	UE&C JOB NO. 6237.006	DATE: 05/15/92
DOE-RL/WHC HANFORD, WA	WRAP FACILITY MODULE 2A	ACCOUNT NO.	BY: MP

REVISIONS (DATE & BY)	A		B		C		D	
	E		F		G		H	

SERVICE: SUPPLY FAN	MANUFACTURER:	SOURCE OF QUOTE:
NO. FANS REQ'D: 1	SIZE & MODEL:	
NO. MOTORS REQ'D: 1	ITEM NO: PROVIDED BY: MTD. BY:	REF. PAGE:
NO. TURBINES REQ'D:	ITEM NO: PROVIDED BY: MTD. BY:	REF. PAGE:

CONDITIONS OF SERVICE, EACH FAN

FLUID HANDLED: AIR		BULK DENSITY:	
COMPOSITION:			
PARTICULATES:	TYPE:	SIZE:	GRAINS/CU. FT.:
BAROMETER: PSIA	REL. HUMIDITY: %	CORR./EROS. CAUSED BY:	
TEMPERATURE, SUCTION: °F		TEMPERATURE DISCHARGE:	
SUCTION PRESS: (PSIA)("H_2OABS)	DISCH. PRESS: (PSIA)("H_2OABS)	FAN STATIC PRESS: 3" TSP ("H_2OABS)	
CAPACITY, NORMAL @S.P.T.: ACFM		CAPACITY, DESIGN @S.P.T.: 30,200 ACFM	
CAPACITY, DESIGN & SUCTION CONDITIONS:			ACFM

SPECIFICATIONS

☐ SINGLE WIDTH, SINGLE INLET				☐ DOUBLE WIDTH, DOUBLE INLET	
ARRANGEMENT:				CLASS: UNCLASSIFIED	
INLET	SIZE:	RATING:	LOCATION:	FAN SPEED NORMAL:	RPM
OUTLET	SIZE:	RATING:	LOCATION:	FAN SPEED MAXIMUM:	RPM
MATERIALS	CASING:	IMP:		DESIGN CONDITIONS:	
CONSTRUCT	SHAFT:	SHAFT SLEEVE:		CUT. VEL. DESIGN: FPM OUT. VEL. MAX.:	FPM
PACKING	MFG:	TYPE:	NO. RINGS:	CASE DESIGN PRESSURE:	PSIG
MECH. SEAL	MFG:	TYPE:		CASE DESIGN TEMPERATURE:	°F
COUPLING	MFG:	TYPE:		IMP. DIA. & TYPE:	
DAMPERS	☐ INLET	☐ OUTLET		ACCESS DOOR LOCATION:	
BEARINGS	☐ BALL	☐ SLEEVE	☐ ROLLER	☐ OIL LUBRICATED	☐ GREASE
COOLING	☐ WATER ☐ WATER-GLYCOL	GPM:		TEMP.:	Δ T: °F PRESSURE: PSIG
DRIVE TYPE	☐ DIRECT	☐ GEAR		☐ V-BELT	☐ DRIVE GUARD
DRIVER POSITION FOR V-BELT DRIVE (SEE SKETCH BELOW): ☐ W ☐ X ☐ Y ☐ Z					

MOTOR DRIVE

HP: 30	RPM:	FRAME:	VOLTS/PHASE/CYCLE: 460/3/60
MFR:		TYPE: SQUIRREL CAGE	NEMA DESIGN:
ENCLOSURE:		RATED AMBIENT TEMP: 40°C	INSUL. CLASS:
ELEVATION: FT.		FULL LOAD AMPS:	SPACE HEATERS:

GENERAL INFORMATION

APPROX.	FAN & BASE:	FAN:	MOTOR:	TURBINE:	GEAR:
INSP. REQ'D.:	☐ NON-WIT. PERF.		☐ WITNESSED PERF.		☐ SHOP TEST
	☐ DISMANT. & INSP. AFTER TEST		☐ OTHER:		
PERFORMANCE CURVE NO.:			DIMENSIONAL PRINT NO.:		
CODE REQUIREMENTS & SPECS.					

REMARKS: FAN IS HOUSED IN AIR HANDLING UNIT AH-14-601 PURCHASED WITH A/H UNIT

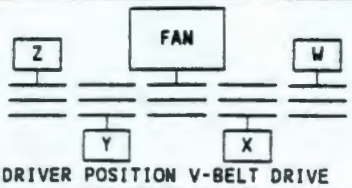

DRIVER POSITION V-BELT DRIVE

9413227.0907

THIS PAGE INTENTIONALLY
LEFT BLANK

SECTION 15860

9413227.0908

THIS PAGE INTENTIONALLY
LEFT BLANK

WRAP MODULE 2A

SPECIFICATION SECTION
FOR
15860 RETURN AND EXHAUST FANS

TABLE OF CONTENTS

PART 1 GENERAL

1.01 SECTION SCOPE
1.02 RELATED SECTIONS
1.03 REFERENCES
1.04 SYSTEM DESCRIPTION
1.05 SUBMITTALS
1.06 DELIVERY, STORAGE AND HANDLING
1.07 SITE CONDITIONS

PART 2 PRODUCTS

2.01 MANUFACTURERS
2.02 MATERIALS
2.03 EQUIPMENT
2.04 COMPONENTS
2.05 FABRICATION
2.06 SHOP QUALITY CONTROL

PART 3 EXECUTION

3.01 PREPARATION
3.02 ERECTION, INSTALLATION AND APPLICATION
3.03 FIELD QUALITY CONTROL
3.04 ADJUSTING AND CLEANING
3.05 DEMONSTRATION
3.06 PROTECTION

APPENDIX

APPENDIX A DATA SHEETS

9413227.0909

WRAP MODULE 2A

SECTION 15860

RETURN AND EXHAUST FANS

PART 1 GENERAL

1.01 SECTION SCOPE

A. This specification establishes the requirements for detailed design, fabrication, installation, start-up, and acceptance testing of return and exhaust fans for the HVAC systems and provide other necessary safety items that are included in the work scope.

1.02 RELATED SECTIONS

1.03 REFERENCES

A. Air Movement and Control Association (AMCA)

B. Underwriters Laboratories (UL)

1.04 SYSTEM DESCRIPTION

A. Data Sheets

Equipment Tag Nos. WBS Area Location Numbers and equipment data sheets for this description are provided in **Appendix A.**

END OF SECTION

9413227.0910

UNITED ENGINEERS & CONSTRUCTORS A Raytheon Company Western Operations	EQUIPMENT DATA SHEET ☒ CDR ☐ TITLE I ☐ TITLE II ☐ TITLE III	ITEM NUMBER EF-14-101A,B,C,D	PAGE 1 OF 1

CUSTOMER & LOCATION	PROJECT	UE&C JOB NO. 6237.006	DATE: 06/08/92
DOE-RL/WHC HANFORD, WA	WRAP FACILITY MODULE 2A	ACCOUNT NO.	BY: JPJ

REVISIONS (DATE & BY)	A		B		C		D	
	E		F		G		H	

SERVICE: ZONE II PROCESS EXHAUST FAN	MANUFACTURER:	SOURCE OF QUOTE:
NO. FANS REQ'D: 4	SIZE & MODEL:	
NO. MOTORS REQ'D: 4	ITEM NO: PROVIDED BY: MTD. BY:	REF. PAGE:
NO. TURBINES REQ'D:	ITEM NO: PROVIDED BY: MTD. BY:	REF. PAGE:

CONDITIONS OF SERVICE, EACH FAN

FLUID HANDLED: AIR			BULK DENSITY:
COMPOSITION:			
PARTICULATES:	TYPE:	SIZE:	GRAINS/CU. FT.:
BAROMETER: PSIA	REL. HUMIDITY: 15%	CORR./EROS. CAUSED BY:	
TEMPERATURE, SUCTION: °F		TEMPERATURE DISCHARGE:	
SUCTION PRESSURE: (PSIA)("H_2OABS)	DISCH. PRESS: (PSIA)("H_2OABS)	FAN STATIC PRESS: 12.5 ("H_2OABS)	
CAPACITY, NORMAL @S.P.T.: 19,913 ACFM		CAPACITY, DESIGN @S.P.T.: 19,913 ACFM	
CAPACITY, DESIGN & SUCTION CONDITIONS: 19,913 ACFM			

SPECIFICATIONS

☒ SINGLE WIDTH, SINGLE INLET CENTRIFUGAL				☐ DOUBLE WIDTH, DOUBLE INLET		
ARRANGEMENT:				CLASS: UNCLASSIFIED		
INLET	SIZE:	RATING:	LOCATION:	FAN SPEED NORMAL:		RPM
OUTLET	SIZE:	RATING:	LOCATION:	FAN SPEED MAXIMUM:		RPM
MATERIALS	CASING: SS	IMP:		DESIGN CONDITIONS:		
CONSTRUCT	SHAFT:	SHAFT SLEEVE:		CUT. VEL. DESIGN:	FPM OUT. VEL. MAX.:	FPM
PACKING	MFG:	TYPE:	NO. RINGS:	CASE DESIGN PRESSURE:		PSIG
MECH. SEAL	MFG:	TYPE:		CASE DESIGN TEMPERATURE:		°F
COUPLING	MFG:	TYPE:		IMP. DIA. & TYPE:		
DAMPERS	☒ INLET VIV	☐ OUTLET		ACCESS DOOR LOCATION:		
BEARINGS	☐ BALL	☐ SLEEVE	☒ ROLLER	☐ OIL LUBRICATED	☐ GREASE	
COOLING	☐ WATER ☐ WATER-GLYCOL	GPM:		TEMP.:	Δ T: °F	PRESSURE: PSIG
DRIVE TYPE	☐ DIRECT	☐ GEAR		☒ V-BELT	☒ DRIVE GUARD	
DRIVER POSITION FOR V-BELT DRIVE (SEE SKETCH BELOW): ☐ W ☐ X ☐ Y ☐ Z						

MOTOR DRIVE

HP: 75	RPM:	FRAME:	VOLTS/PHASE/CYCLE: 460/3/60
MFR:		TYPE: SQUIRREL CAGE	NEMA DESIGN:
ENCLOSURE:		RATED AMBIENT TEMP: 40°C	INSUL. CLASS:
ELEVATION: 710 FT.		FULL LOAD AMPS:	SPACE HEATERS:

GENERAL INFORMATION

APPROX.	FAN & BASE:	FAN:	MOTOR:	TURBINE:	GEAR:
INSP. REQ'D.:	☐ NON-WIT. PERF.		☐ WITNESSED PERF.		☐ SHOP TEST
	☐ DISMANT. & INSP. AFTER TEST		☐ OTHER:		
PERFORMANCE CURVE NO.:			DIMENSIONAL PRINT NO.:		
CODE REQUIREMENTS & SPECS.					

REMARKS: FAN HAS AUTOMATIC BACKDRAFT DAMPER

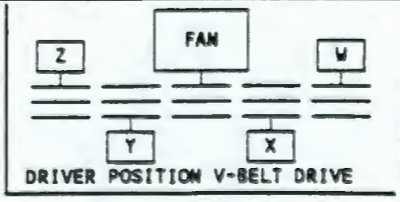

9413227.0911

WRAP MODULE 2A

APPENDIX A

EQUIPMENT/INSTRUMENT DATA SHEETS

WBS LOCATION	EQUIPMENT TAG	SERVICE
1114	EF-14-101A,B,C,D	Process Exhaust Air Fan
1114	EF-14-104A,B	Zone I Process Exhaust Fan
1114	EF-14-201	Change Room Exhaust Fan
1114	RF-14-301	Return Fan Shipping/ Receiving Area
1114	RF-14-401	Return Fan Administration Area
1114	EF-14-401	Toilet Exhaust Fan
1114	EF-14-601A,B	Roof Exhaust Fan
1114	EF-14-602	Exhaust Fan Compressor Room
1106	C-06-301	Scrubber Off-Gas Blower
1105	C-05-301A,B	Vault Exhaust Blower

9413227.0912

UNITED ENGINEERS & CONSTRUCTORS A Raytheon Company Western Operations	EQUIPMENT DATA SHEET ☒ CDR ☐ TITLE I ☐ TITLE II ☐ TITLE III	ITEM NUMBER EF-14-104A,B	PAGE 1 OF 1
CUSTOMER & LOCATION DOE-RL/WHC HANFORD, WA	PROJECT WRAP FACILITY MODULE 2A	UE&C JOB NO. 6237.006 / ACCOUNT NO.	DATE: 06/08/92 / BY: JPJ

REVISIONS (DATE & BY)	A		B		C		D	
	E		F		G		H	

SERVICE: ZONE I PROCESS EXHAUST FAN

MANUFACTURER:

SOURCE OF QUOTE:

NO. FANS REQ'D: 2

SIZE & MODEL:

NO. MOTORS REQ'D: 2 — ITEM NO: PROVIDED BY: MTD. BY: REF. PAGE:

NO. TURBINES REQ'D: — ITEM NO: PROVIDED BY: MTD. BY: REF. PAGE:

CONDITIONS OF SERVICE, EACH FAN

FLUID HANDLED: AIR — BULK DENSITY:

COMPOSITION:

PARTICULATES: — TYPE: — SIZE: — GRAINS/CU. FT.:

BAROMETER: PSIA — REL. HUMIDITY: 15% — CORR./EROS. CAUSED BY:

TEMPERATURE, SUCTION: °F — TEMPERATURE DISCHARGE:

SUCTION PRESS: (PSIA)("H_2OABS) DISCH. PRESS: (PSIA)("H_2OABS) FAN STATIC PRESS: 14 ("H_2OABS)

CAPACITY, NORMAL @S.P.T.: 11,540 ACFM — CAPACITY, DESIGN @S.P.T.: 11,540 ACFM

CAPACITY, DESIGN & SUCTION CONDITIONS: 11,540 ACFM

SPECIFICATIONS

☒ SINGLE WIDTH, SINGLE INLET CENTRIFUGAL — ☐ DOUBLE WIDTH, DOUBLE INLET

ARRANGEMENT: — CLASS: UNCLASSIFIED

INLET	SIZE:	RATING:	LOCATION:	FAN SPEED NORMAL: RPM
OUTLET	SIZE:	RATING:	LOCATION:	FAN SPEED MAXIMUM: RPM
MATERIALS	CASING: SS	IMP:		DESIGN CONDITIONS:
CONSTRUCT	SHAFT:	SHAFT SLEEVE:		CUT. VEL. DESIGN: FPM OUT. VEL. MAX.: FPM
PACKING	MFG:	TYPE:	NO. RINGS:	CASE-DESIGN PRESSURE: PSIG
MECH. SEAL	MFG:	TYPE:		CASE DESIGN TEMPERATURE: °F
COUPLING	MFG:	TYPE:		IMP. DIA. & TYPE:
DAMPERS	☒ INLET VIV	☐ OUTLET		ACCESS DOOR LOCATION:
BEARINGS	☐ BALL	☐ SLEEVE	☒ ROLLER	☐ OIL LUBRICATED ☐ GREASE
COOLING	☐ WATER ☐ WATER-GLYCOL	GPM:	TEMP.:	Δ T: °F PRESSURE: PSIG
DRIVE TYPE	☐ DIRECT	☐ GEAR	☒ V-BELT	☒ DRIVE GUARD

DRIVER POSITION FOR V-BELT DRIVE (SEE SKETCH BELOW): ☐ W ☐ X ☐ Y ☐ Z

MOTOR DRIVE

HP: 50	RPM:	FRAME:	VOLTS/PHASE/CYCLE: 460/3/60
MFR:		TYPE: SQUIRREL CAGE	NEMA DESIGN:
ENCLOSURE:		RATED AMBIENT TEMP: 40°C	INSUL. CLASS:
ELEVATION: 710 FT.		FULL LOAD AMPS:	SPACE HEATERS:

GENERAL INFORMATION

APPROX.	FAN & BASE:	FAN:	MOTOR:	TURBINE:	GEAR:

INSP. REQ'D.: ☐ NON-WIT. PERF. ☐ WITNESSED PERF. ☐ SHOP TEST ☐ DISMANT. & INSP. AFTER TEST ☐ OTHER:

PERFORMANCE CURVE NO.: — DIMENSIONAL PRINT NO.:

CODE REQUIREMENTS & SPECS.

REMARKS: FAN HAS AUTOMATIC BACKDRAFT DAMPER

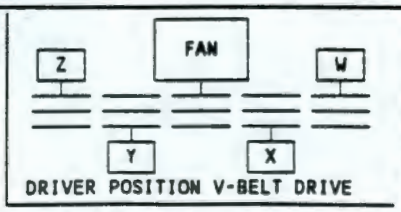

9413227.0913

UNITED ENGINEERS & CONSTRUCTORS A Raytheon Company Western Operations	EQUIPMENT DATA SHEET ☒ CDR ☐ TITLE I ☐ TITLE II ☐ TITLE III	ITEM NUMBER EF-14-201	PAGE 1 OF 1

CUSTOMER & LOCATION	PROJECT	UE&C JOB NO. 6237.006	DATE: 06/08/92
DOE-RL/WHC HANFORD, WA	WRAP FACILITY MODULE 2A	ACCOUNT NO.	BY: JPJ

REVISIONS (DATE & BY)	A		B		C		D	
	E		F		G		H	

SERVICE: LOCKER ROOM EXHAUST FAN	MANUFACTURER:		SOURCE OF QUOTE:
NO. FANS REQ'D: 1	SIZE & MODEL:		
NO. MOTORS REQ'D: 1	ITEM NO:	PROVIDED BY:	MTD. BY: REF. PAGE:
NO. TURBINES REQ'D:	ITEM NO:	PROVIDED BY:	MTD. BY: REF. PAGE:

CONDITIONS OF SERVICE, EACH FAN

FLUID HANDLED: AIR			BULK DENSITY:
COMPOSITION:			
PARTICULATES:	TYPE:	SIZE:	GRAINS/CU. FT.:
BAROMETER: PSIA	REL. HUMIDITY: 15%	CORR./EROS. CAUSED BY:	
TEMPERATURE, SUCTION: °F		TEMPERATURE DISCHARGE:	
SUCTION PRESS: (PSIA)("H_2OABS)	DISCH. PRESS: (PSIA)("H_2OABS)	FAN STATIC PRESS: 2.5 ("H_2OABS)	
CAPACITY, NORMAL @S.P.T.: 6,400 ACFM		CAPACITY, DESIGN @S.P.T.: 6,400 ACFM	
CAPACITY, DESIGN & SUCTION CONDITIONS:		6,400 ACFM	

SPECIFICATIONS

☒ SINGLE WIDTH, SINGLE INLET CENTRIFUGAL				☐ DOUBLE WIDTH, DOUBLE INLET	
ARRANGEMENT:				CLASS: UNCLASSIFIED	
INLET	SIZE:	RATING:	LOCATION:	FAN SPEED NORMAL:	RPM
OUTLET	SIZE:	RATING:	LOCATION:	FAN SPEED MAXIMUM:	RPM
MATERIALS CONSTRUCT	CASING:	IMP:		DESIGN CONDITIONS:	
	SHAFT:	SHAFT SLEEVE:		CUT. VEL. DESIGN: FPM OUT. VEL. MAX.:	FPM
PACKING	MFG:	TYPE:	NO. RINGS:	CASE DESIGN PRESSURE:	PSIG
MECH. SEAL	MFG:	TYPE:		CASE DESIGN TEMPERATURE:	°F
COUPLING	MFG:	TYPE:		IMP. DIA. & TYPE:	
DAMPERS	☒ INLET	☐ OUTLET		ACCESS DOOR LOCATION:	
BEARINGS	☐ BALL	☐ SLEEVE	☒ ROLLER	☐ OIL LUBRICATED	☐ GREASE
COOLING	☐ WATER ☐ WATER-GLYCOL	GPM:	TEMP.:	Δ T: °F	PRESSURE: PSIG
DRIVE TYPE	☐ DIRECT	☐ GEAR	☒ V-BELT	☐ DRIVE GUARD	
DRIVER POSITION FOR V-BELT DRIVE (SEE SKETCH BELOW): ☐ W ☐ X ☐ Y ☐ Z					

MOTOR DRIVE

HP: 5	RPM:	FRAME:	VOLTS/PHASE/CYCLE: 460/3/60
MFR:		TYPE: SQUIRREL CAGE	NEMA DESIGN:
ENCLOSURE:		RATED AMBIENT TEMP: 40°C	INSUL. CLASS:
ELEVATION: 710 FT.		FULL LOAD AMPS:	SPACE HEATERS:

GENERAL INFORMATION

APPROX.	FAN & BASE:	FAN:	MOTOR:	TURBINE:	GEAR:
INSP. REQ'D.:	☐ NON-WIT. PERF.		☐ WITNESSED PERF.		☐ SHOP TEST
	☐ DISMANT. & INSP. AFTER TEST		☐ OTHER:		
PERFORMANCE CURVE NO.:			DIMENSIONAL PRINT NO.:		
CODE REQUIREMENTS & SPECS.					

REMARKS: FAN MOUNTED INSIDE AH-14-201. INTERLOCK FAN MOTOR TO START WITH AH-14-201

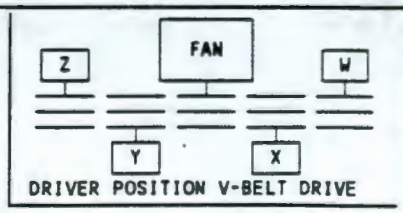

DRIVER POSITION V-BELT DRIVE

UNITED ENGINEERS & CONSTRUCTORS
A Raytheon Company
Western Operations

EQUIPMENT DATA SHEET

CUSTOMER DOE-RL/WHC
PROJECT WRAP FACILITY MODULE 2A
LOCATION HANFORD, WA
☐ CDR ☐ TITLE I ☐ TITLE II ☐ TITLE III

TAG NO. RF-14-301
ACCT.
S-R JOB 6237.006
PAGE 1 OF 1
DATE: 06/08/92 BY: JPJ

SERVICE: SHIPPING AREA RETURN AIR FAN NO. REQ'D. 1
REVISIONS: A BY B BY C BY D BY
MANUFACTURER MODEL SIZE TYPE
SOURCE QUOTATION NO. DATE:

FAN DATA

CFM: 18,000 OUT. VEL.
FPM:
RPM: BHP: .5" SP: "W
ROTATION: CCW ☐: CW: ☐ CENTRIFUGAL: SWSI ☐ DWDI ☐
BLADE: FC ☐: BI ☐: PROPELLER ☒
WHEEL DIA. IN TIP SPEED FPS
NOISE LEVEL

MOTOR DATA

HP: 3 RPM: ☐ 1: ☐ 2 SPEED
VOLTS: 460 AMPS PHASE 3 CYCLE: 60
DRIP PROOF ☐: TOT. ENCLOSED ☐ EXPLOSION PROOF ☐
MOTOR POSITION
DRIVE: BELT ☐: DIRECT ☐: ADJUSTABLE SHEAVE ☐
MOTOR FURNISHED BY
STARTER FURNISHED BY

CABINET & MOUNTING

HOODED TYPE ☐: AXIAL TYPE ☒

REVERSED. DOWNSTREAM AIR FLOW ☐ NORMAL. UPSTREAM AIR FLOW ☐

MATERIALS: METAL GALVANIZED GAUGE INTERNAL COATING
MOUNTING DIMENSIONS: CURB IN. SQ.: WALL IN. SQ.: LIMITING HEIGHT IN.
PREFABRICATED CURB FURNISHED WITH UNIT ☐: SOUND ATTENUATING TYPE ☐
BIRD SCREEN MESH GAUGE GALVANIZED WIRE. BY
FAN GUARD

DAMPERS

BACKDRAFT ☐: AUTOMATIC ☐: FURNISHED BY
MATERIALS: BLADES BLADE EDGES BEARINGS

CONTROLS

INTERLOCK FAN MOTOR TO START WITH: AIR HANDLER AH-14-301
PUSH BUTTON: START-STOP ☐: LOCAL: ☐: REMOTE ☐: PANEL MOUNTED ☐
HIGH TEMP: STOP ☐: START ☐: DAMPER CLOSED ☐ DAMPER OPEN ☐

SPECIAL NOTES

ABOVE DATA COMPENSATED FOR: 710 FT. ABOVE SEA LEVEL. UNIT WEIGHT LBS.

9413227.0915

UNITED ENGINEERS & CONSTRUCTORS
A Raytheon Company
Western Operations

EQUIPMENT DATA SHEET

CUSTOMER DOE-RL/WHC
PROJECT WRAP FACILITY MODULE 2A
LOCATION HANFORD, WA
☐ CDR ☐ TITLE I ☐ TITLE II ☐ TITLE III

TAG NO. RF-14-401
ACCT.
S-R JOB 6237.006
PAGE 1 OF 1
DATE: 06/08/92 BY: JPJ

SERVICE: ADMINISTRATION AIR RETURN AIR FAN NO. REQ'D. 1
REVISIONS: A BY B BY C BY D BY
MANUFACTURER MODEL SIZE TYPE
SOURCE QUOTATION NO. DATE:

FAN DATA

CFM: 22,500 OUT. VEL.
FPM:
RPM: BHP: .5" SP: "W
ROTATION: CCW ☐ CW: ☐ CENTRIFUGAL: SWSI ☐ DWDI ☐
BLADE: FC ☐ BI ☐ PROPELLER ☒
WHEEL DIA. IN TIP SPEED FPS
NOISE LEVEL

MOTOR DATA

HP: 5 RPM: ☐ 1: ☐ 2 SPEED
VOLTS: 460 AMPS PHASE 3 CYCLE: 60
DRIP PROOF ☐: TOT. ENCLOSED ☐ EXPLOSION PROOF ☐
MOTOR POSITION
DRIVE: BELT ☐ DIRECT ☐ ADJUSTABLE SHEAVE ☐
MOTOR FURNISHED BY
STARTER FURNISHED BY

CABINET & MOUNTING

HOODED TYPE ☐: AXIAL TYPE ☒

REVERSED. DOWNSTREAM AIR FLOW ☐ NORMAL. UPSTREAM AIR FLOW ☐

MATERIALS: METAL GALVANIZED GAUGE INTERNAL COATING
MOUNTING DIMENSIONS: CURB IN. SQ.: WALL IN. SQ.: LIMITING HEIGHT IN.
PREFABRICATED CURB FURNISHED WITH UNIT ☐ SOUND ATTENUATING TYPE ☐
BIRD SCREEN MESH GAUGE GALVANIZED WIRE. BY
FAN GUARD

DAMPERS

BACKDRAFT ☐: AUTOMATIC ☐: FURNISHED BY
MATERIALS: BLADES BLADE EDGES BEARINGS

CONTROLS

INTERLOCK FAN MOTOR TO START WITH: AIR HANDLER AH-14-401
PUSH BUTTON: START-STOP ☐ LOCAL: ☐ REMOTE ☐ PANEL MOUNTED ☐
HIGH TEMP: STOP ☐ START ☐ DAMPER CLOSED ☐ DAMPER OPEN ☐

SPECIAL NOTES

ABOVE DATA COMPENSATED FOR: 710 FT. ABOVE SEA LEVEL. UNIT WEIGHT LBS.

9413227.0916

UNITED ENGINEERS & CONSTRUCTORS
A Raytheon Company
Western Operations

EQUIPMENT DATA SHEET

CUSTOMER: DOE-RL/WHC
PROJECT: WRAP FACILITY MODULE 2A
LOCATION: HANFORD, WA
☐ CDR ☐ TITLE I ☐ TITLE II ☐ TITLE III

TAG NO. EF-14-401
ACCT.
S-R JOB 6237.006
PAGE 1 OF 1
DATE: 05/15/92 BY: MP

SERVICE: EXHAUST - TOILETS NO. REQ'D. 1
REVISIONS: A BY B BY C BY D BY
MANUFACTURER MODEL SIZE TYPE
SOURCE QUOTATION NO. DATE:

FAN DATA

CFM: 1,000 OUT. VEL.
FPM:
RPM: BHP: .25" WG SP:
"W
ROTATION: CCW ☐ CW: ☐ CENTRIFUGAL: SWSI ☐ DWDI ☐
BLADE: FC ☐ BI ☐ PROPELLER ☒
WHEEL DIA. IN TIP SPEED FPS
NOISE LEVEL

MOTOR DATA

HP: 1/12 RPM: ☒ 1: ☐ 2 SPEED
VOLTS: 120 AMPS PHASE 1 CYCLE: 60
DRIP PROOF ☐: TOT. ENCLOSED ☐ EXPLOSION PROOF ☐
MOTOR POSITION: VERTICAL
DRIVE: BELT ☐ DIRECT ☒: ADJUSTABLE SHEAVE ☐
MOTOR FURNISHED BY: VENDOR
STARTER FURNISHED BY:

CABINET & MOUNTING

POWER ROOF EXHAUST FAN

ROOF MOUNTED

HOODED TYPE ☒: AXIAL TYPE ☐

WALL EXHAUST FAN

REVERSED. DOWNSTREAM AIR FLOW ☐ NORMAL. UPSTREAM AIR FLOW ☐

MATERIALS: METAL ALUMINUM GAUGE INTERNAL COATING
MOUNTING DIMENSIONS: CURB IN. SQ.: WALL IN. SQ.: LIMITING HEIGHT IN.
PREFABRICATED CURB FURNISHED WITH UNIT ☒: SOUND ATTENUATING TYPE ☐
BIRD SCREEN: .5" SQUARE MESH GAUGE GALVANIZED WIRE. BY
FAN GUARD

DAMPERS

BACKDRAFT ☒ AUTOMATIC ☒ FURNISHED BY: FAN VENDOR
MATERIALS: BLADES BLADE EDGES BEARINGS

CONTROLS

INTERLOCK FAN MOTOR TO START WITH:
PUSH BUTTON: START-STOP ☒ LOCAL: ☒ REMOTE ☐ PANEL MOUNTED ☐
HIGH TEMP: STOP ☐ START ☐ DAMPER CLOSED ☐ DAMPER OPEN ☐

SPECIAL NOTES

ABOVE DATA COMPENSATED FOR: 710 FT. ABOVE SEA LEVEL. UNIT WEIGHT LBS.

9413227.0917

UNITED ENGINEERS & CONSTRUCTORS
A Raytheon Company
Western Operations

EQUIPMENT DATA SHEET

CUSTOMER DOE-RL/WHC
PROJECT WRAP FACILITY MODULE 2A
LOCATION HANFORD, WA
☐ CDR ☐ TITLE I ☐ TITLE II ☐ TITLE III

TAG NO. EF-14-601A,B
ACCT.
S-R JOB 6237.006
PAGE 1 OF 1
DATE: 05/15/92 BY: MP

SERVICE: EXHAUST - MECHANICAL EQUIPMENT ROOM NO. REQ'D. 2
REVISIONS: A BY B BY C BY D BY
MANUFACTURER MODEL SIZE TYPE
SOURCE QUOTATION NO. DATE:

FAN DATA

CFM: 10,500 OUT. VEL.
FPM:
RPM: BHP: .5" TSP SP:
"W
ROTATION: CCW ☐ CW: ☐ CENTRIFUGAL: SWSI ☐ DWDI ☐
BLADE: FC ☐ BI ☐ PROPELLER ☒
WHEEL DIA. IN TIP SPEED FPS
NOISE LEVEL

MOTOR DATA

HP: 2 RPM: ☒ 1 ☐ 2 SPEED
VOLTS: 460 AMPS PHASE 3 CYCLE: 60
DRIP PROOF ☐ TOT. ENCLOSED ☐ EXPLOSION PROOF ☐
MOTOR POSITION: VERTICAL
DRIVE: BELT ☐ DIRECT ☒ ADJUSTABLE SHEAVE ☐
MOTOR FURNISHED BY: VENDOR
STARTER FURNISHED BY:

CABINET & MOUNTING

POWER ROOF EXHAUST FAN

ROOF MOUNTED

HOODED TYPE ☒ AXIAL TYPE ☐

WALL EXHAUST FAN

REVERSED. DOWNSTREAM AIR FLOW ☐ NORMAL. UPSTREAM AIR FLOW ☐

MATERIALS: METAL GALVANIZED GAUGE INTERNAL COATING
MOUNTING DIMENSIONS: CURB IN. SQ.: WALL IN. SQ.: LIMITING HEIGHT IN.
PREFABRICATED CURB FURNISHED WITH UNIT ☒ SOUND ATTENUATING TYPE ☐
BIRD SCREEN: .5" SQUARE MESH GAUGE GALVANIZED WIRE. BY
FAN GUARD

DAMPERS

BACKDRAFT ☒ AUTOMATIC ☒ FURNISHED BY: FAN VENDOR
MATERIALS: BLADES BLADE EDGES BEARINGS

CONTROLS

INTERLOCK FAN MOTOR TO START WITH: THERMOSTAT
PUSH BUTTON: START-STOP ☐ LOCAL ☐ REMOTE ☒ PANEL MOUNTED ☐
HIGH TEMP: STOP ☐ START ☒ DAMPER CLOSED ☐ DAMPER OPEN ☐

SPECIAL NOTES

ABOVE DATA COMPENSATED FOR: 710 FT. ABOVE SEA LEVEL. UNIT WEIGHT LBS.

UNITED ENGINEERS & CONSTRUCTORS
A Raytheon Company
Western Operations

EQUIPMENT DATA SHEET

CUSTOMER DOE-RL/WHC
PROJECT WRAP FACILITY MODULE 2A
LOCATION HANFORD, WA
☐ CDR ☐ TITLE I ☐ TITLE II ☐ TITLE III

TAG NO. EF-14-602
ACCT.
S-R JOB 6237.006
PAGE 1 OF 1
DATE: 06/08/92 BY: JPJ

SERVICE: COMPRESSOR ROOM EXHAUST NO. REQ'D. 1
REVISIONS: A BY B BY C BY D BY
MANUFACTURER MODEL SIZE TYPE
SOURCE QUOTATION NO. DATE:

FAN DATA

CFM: 600 OUT. VEL. FPM:
RPM: BHP: .25" SP: "W
ROTATION: CCW ☐ CW: ☐ CENTRIFUGAL: SWSI ☐ DWDI ☐
BLADE: FC ☐ BI ☐ PROPELLER ☒
WHEEL DIA. IN TIP SPEED FPS
NOISE LEVEL

MOTOR DATA

HP: 1/12 RPM: ☒ 1 ☐ 2 SPEED
VOLTS: 120 AMPS PHASE 1 CYCLE: 60
DRIP PROOF ☐ TOT. ENCLOSED ☐ EXPLOSION PROOF ☐
MOTOR POSITION: VERTICAL
DRIVE: BELT ☐ DIRECT ☒ ADJUSTABLE SHEAVE ☐
MOTOR FURNISHED BY: VENDOR
STARTER FURNISHED BY:

CABINET & MOUNTING

POWER ROOF EXHAUST FAN	WALL EXHAUST FAN
ROOF MOUNTED	
HOODED TYPE ☒ AXIAL TYPE ☐	REVERSED. DOWNSTREAM AIR FLOW ☐ NORMAL. UPSTREAM AIR FLOW ☐

MATERIALS: METAL GALVANIZED GAUGE INTERNAL COATING
MOUNTING DIMENSIONS: CURB IN. SQ.: WALL IN. SQ.: LIMITING HEIGHT IN.
PREFABRICATED CURB FURNISHED WITH UNIT ☒ SOUND ATTENUATING TYPE ☐
BIRD SCREEN: .5" SQUARE MESH GAUGE GALVANIZED WIRE. BY
FAN GUARD

DAMPERS

BACKDRAFT ☒ AUTOMATIC ☒ FURNISHED BY: FAN VENDOR
MATERIALS: BLADES BLADE EDGES BEARINGS

CONTROLS

INTERLOCK FAN MOTOR TO START WITH: THERMOSTAT
PUSH BUTTON: START-STOP ☐ LOCAL ☐ REMOTE ☒ PANEL MOUNTED ☐
HIGH TEMP: STOP ☐ START ☒ DAMPER CLOSED ☐ DAMPER OPEN ☐

SPECIAL NOTES

ABOVE DATA COMPENSATED FOR: FT. ABOVE SEA LEVEL. UNIT WEIGHT LBS.

9413227.0919

UNITED ENGINEERS & CONSTRUCTORS A Raytheon Company Western Operations	EQUIPMENT DATA SHEET ☒ CDR ☐ TITLE I ☐ TITLE II ☐ TITLE III	ITEM NUMBER C-05-301A,B	PAGE 1 OF 1

CUSTOMER & LOCATION	PROJECT	UE&C JOB NO. 6237.006	DATE: 07/21
DOE-RL/WHC HANFORD, WA	WRAP FACILITY MODULE 2A	ACCOUNT NO.	BY: RLH

REVISIONS (DATE & BY)	A		B		C		D	
	E		F		G		H	

SERVICE: VAULT EXHAUST BLOWER	MANUFACTURER:	SOURCE OF QUOTE:
NO. FANS REQ'D: 2	SIZE & MODEL:	
NO. MOTORS REQ'D: 2	ITEM NO: PROVIDED BY: MTD. BY:	REF. PAGE:
NO. TURBINES REQ'D:	ITEM NO: PROVIDED BY: MTD. BY:	REF. PAGE:

CONDITIONS OF SERVICE, EACH FAN

FLUID HANDLED: AIR			BULK DENSITY:
COMPOSITION: AIR WITH TRACE HYDROCARBON VAPOR			
PARTICULATES:	TYPE:	SIZE:	GRAINS/CU. FT.:
BAROMETER: 700 FT ALT	REL. HUMIDITY: %	CORR./EROS. CAUSED BY:	
TEMPERATURE, SUCTION: 60°F		TEMPERATURE DISCHARGE:	
SUCTION PRESS: (PSIA)("H₂OABS)	DISCH. PRESS: (PSIA)("H₂OABS)	FAN STATIC PRESS: 10 ("H₂OABS)	
CAPACITY, NORMAL @S.P.T.: ACFM		CAPACITY, DESIGN @S.P.T.: 700 ACFM	
CAPACITY, DESIGN @ SUCTION CONDITIONS:			ACFM

SPECIFICATIONS

☐ SINGLE WIDTH, SINGLE INLET				☐ DOUBLE WIDTH, DOUBLE INLET	
ARRANGEMENT:				CLASS: UNCLASSIFIED	
INLET	SIZE:	RATING:	LOCATION:	FAN SPEED NORMAL:	RPM
OUTLET	SIZE:	RATING:	LOCATION:	FAN SPEED MAXIMUM:	RPM
MATERIALS CONSTRUCT	CASING:	IMP:		DESIGN CONDITIONS:	
	SHAFT:	SHAFT SLEEVE:		CUT. VEL. DESIGN: FPM OUT. VEL. MAX.:	FPM
PACKING	MFG:	TYPE:	NO. RINGS:	CASE DESIGN PRESSURE:	PSIG
MECH. SEAL	MFG:	TYPE:		CASE DESIGN TEMPERATURE:	
COUPLING	MFG:	TYPE:		IMP. DIA. & TYPE:	
DAMPERS	☐ INLET	☐ OUTLET		ACCESS DOOR LOCATION:	
BEARINGS	☐ BALL	☐ SLEEVE	☐ ROLLER	☐ OIL LUBRICATED	☐ GREASE
COOLING	☐ WATER ☐ WATER-GLYCOL	GPM:		TEMP.:	Δ T: °F PRESSURE: PSIG
DRIVE TYPE	☐ DIRECT	☐ GEAR		☐ V-BELT	☐ DRIVE GUARD
DRIVER POSITION FOR V-BELT DRIVE (SEE SKETCH BELOW): ☐ W ☐ X ☐ Y ☐ Z					

MOTOR DRIVE

HP: 5	RPM: 2200	FRAME:	VOLTS/PHASE/CYCLE: 460/3/60
MFR:		TYPE: SQUIRREL CAGE	NEMA DESIGN:
ENCLOSURE:		RATED AMBIENT TEMP: 40°C	INSUL. CLASS:
ELEVATION: FT.		FULL LOAD AMPS:	SPACE HEATERS:

GENERAL INFORMATION

APPROX.	FAN & BASE:	FAN:	MOTOR:	TURBINE:	GEAR:
INSP. REQ'D.:	☐ NON-WIT. PERF.		☐ WITNESSED PERF.		☐ SHOP TEST
	☐ DISMANT. & INSP. AFTER TEST		☐ OTHER:		
PERFORMANCE CURVE NO.:			DIMENSIONAL PRINT NO.:		
CODE REQUIREMENTS & SPECS.					

REMARKS:

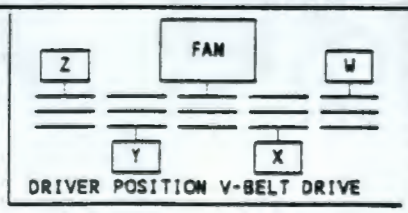

9413227.0920

SECTION 15883

9W/3227.092

THIS PAGE INTENTIONALLY
LEFT BLANK

WRAP MODULE 2A

SPECIFICATION SECTION
FOR
15883 HEPA FILTER HOUSINGS

TABLE OF CONTENTS

PART 1 GENERAL

1.01 SECTION SCOPE
1.02 RELATED SECTIONS
1.03 REFERENCES
1.04 SYSTEM DESCRIPTION
1.05 SUBMITTALS
1.06 DELIVERY, STORAGE AND HANDLING
1.07 SITE CONDITIONS

PART 2 PRODUCTS

2.01 MANUFACTURERS
2.02 MATERIALS
2.03 EQUIPMENT
2.04 COMPONENTS
2.05 FABRICATION
2.06 SHOP QUALITY CONTROL

PART 3 EXECUTION

3.01 PREPARATION
3.02 ERECTION, INSTALLATION AND APPLICATION
3.03 FIELD QUALITY CONTROL
3.04 ADJUSTING AND CLEANING
3.05 DEMONSTRATION
3.06 PROTECTION

APPENDIX

APPENDIX A DATA SHEETS

9413227.0922

WRAP MODULE 2A

SECTION 15883

HEPA FILTER HOUSINGS

PART 1 GENERAL

1.01 SECTION SCOPE

A. This specification establishes the requirements for detailed design, fabrication, installation, start-up and acceptance testing of a HEPA filter housings. The housing shall be a bag-out, side access unit, consisting of one rack for 24 x 24 x 2 inch prefilters, and two racks for 24 x 24 x 11.5 inch fluid seal HEPA filters. 8 x 8 inch cartridge HEPA filter systems are also included.

1.02 RELATED SECTIONS

1.03 REFERENCES

"Filter Plenum Fire Protection Criteria"--Draft--August, 1991, should be used as a guide.

1.04 SYSTEM DESCRIPTION

A. Data Sheets

Equipment Tag Nos., WBS Area Location Numbers and equipment data sheets for this description are provided in **Appendix A.**

END OF SECTION

9413227.0923

WRAP MODULE 2A

APPENDIX A

EQUIPMENT/INSTRUMENT DATA SHEETS

WBS LOCATION	EQUIPMENT TAG	SERVICE
1114	F-14-101A,B,C,D	Process and Room Exhaust
1104	F-04-101A,B	Active Waste Tanks Off-gas
1104	F-04-102A,B	Size Reduction Off-gas
1104	F-04-103A,B	Polymer Encap Off-gas Prefilter
1104	F-04-104A,B	Polymer Encap Off-gas Prefilter Final Filter
1104	F-04-105A,B	Grout Powder Tank Off-gas
1104	F-04-106	Grout Enclosure Off-gas
1104	F-04-107A,B	S/W Enclosure Filter
1104	F-04-108	Sample MGT Hoods
1104	F-04-109A,B	Nonactive Tanks Off-gas
1104	F-04-121	Acid Feed Tank Air Inlet
1104	F-04-122	Caustic Feed Tank Air Inlet
1104	F-04-123	Decon Feed Tank Air Inlet
1104	F-04-124A,B	Nonactive Waste Tank Air Inlet
1104	F-04-125	Active Waste Tank Air Inlet
1104	F-04-126	Treated Active Tank Air Inlet
1104	F-04-127	Size Reduction/Grout Enclosure Air Inlet
1104	F-04-128	Polymer Enclosure Air Inlet

WRAP MODULE 2A

WBS LOCATION	EQUIPMENT TAG	SERVICE
1104	F-04-129	S/W Grout Enclosure Air Inlet

9413227.0925

APRIL 1992

UE&C PROJECT NO. 6237.006

FILE NO. 15883 - A2

UNITED ENGINEERS
& CONSTRUCTORS
A Raytheon Company

Western Operations

CUSTOMER: DOE-RL/WHC
PROJECT: WRAP FACILITY MODULE 2A
LOCATION: HANFORD, WA

ITEM NO.: F-14-101A-D
ACCT.:
UE&C JOB: 6237.006
PAGE: 1 OF 1
DATE: 06/10/92 BY: JPJ

SERVICE: PROCESS EXHAUST HEPA AIR FILTER UNIT NO. REQ'D.: 4
REVISIONS: A BY B BY C BY D BY
MANUFACTURER: MODEL: SIZE: TYPE:
SOURCE: QUOTATION NO.: DATE:

HEPA FILTER

19,913 ACFM @ 12.5" TOTAL STATIC PRESSURE

30% PREFILTER

(2) BAGOUT HEPA SECTIONS AND TEST SECTIONS

1,078 MBH

270 GPM HEAT RECOVERY COIL WITH 45% GLYCOL

UNITS A/B STACKED WITH CONTROL PANEL

9413227.0926

UNITED ENGINEERS & CONSTRUCTORS A Raytheon Company Western Operations	EQUIPMENT DATA SHEET ☒ CDR ☐ TITLE I ☐ TITLE II ☐ TITLE III	ITEM NUMBER F-04-101A,B	PAGE 1 OF 1

CUSTOMER & LOCATION	PROJECT	UE&C JOB NO. 6237.006	DATE: 05/05/92
DOE-RL/WHC HANFORD, WA	WRAP FACILITY MODULE 2A	ACCOUNT NO.	BY: KDV

REVISIONS (DATE & BY)	A		B		C		D	
	E		F		G		H	

SERVICE	MANUFACTURER	NO. REQ'D.	SOURCE OF QUOTE
ACTIVE WASTE TANKS OFF-GAS FILTER		2	

HEPA FILTER

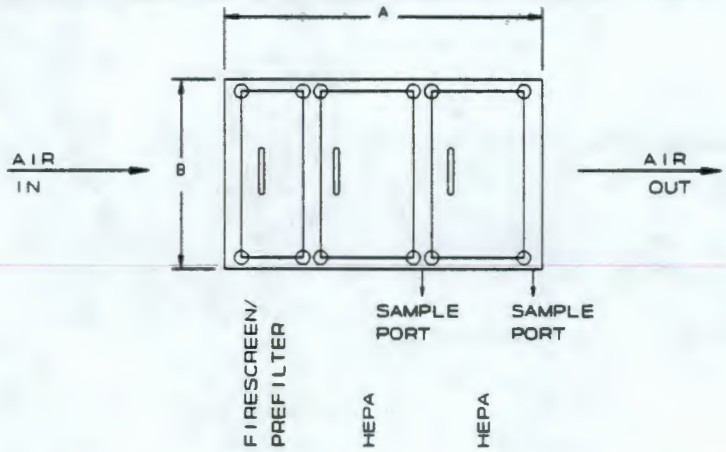

CONDITIONS OF SERVICE		DIMENSIONS	
APPLICATION: 200 ACFM, OFF-GAS (AIR) FROM ACTIVE WASTE TANKS T-12-201 AND 202		A:	F:
SIZE:		B:	G:
COMPONENTS: PREFILTER, HEPA FILTER HEPA FILTER	DUTY: 24 HRS/DAY	C:	H:
DESIGN TEMPERATURE: 150°F		D:	I:
DESIGN PRESS: -15" WC		E:	J:
LOCATION: ACTIVE FILTER ROOM			
CONSTRUCTION			
CONSTRUCTION MATERIAL: 304 STAINLESS STEEL			
HOUSING: BAG-IN, BAG-OUT (2) SAMPLING PORTS			
WEIGHT: 325 LBS			

UNITED ENGINEERS & CONSTRUCTORS A Raytheon Company Western Operations	EQUIPMENT DATA SHEET ☒ CDR ☐ TITLE I ☐ TITLE II ☐ TITLE III	ITEM NUMBER F-04-102A,B	PAGE 1 OF 1

CUSTOMER & LOCATION	PROJECT	UE&C JOB NO. 6237.006	DATE: 05/05/92
DOE-RL/WHC HANFORD, WA	WRAP FACILITY MODULE 2A	ACCOUNT NO.	BY: KDV

REVISIONS (DATE & BY)	A		B		C		D	
	E		F		G		H	

SERVICE	MANUFACTURER	NO. REQ'D.	SOURCE OF QUOTE
SIZE REDUCTION OFF-GAS FILTER		2	

HEPA FILTER

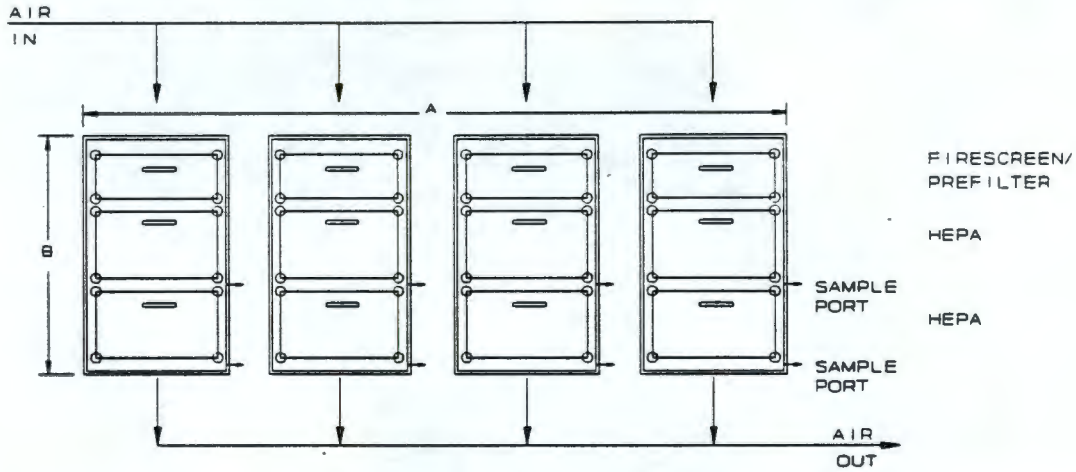

CONDITIONS OF SERVICE		DIMENSIONS	
APPLICATION: 3,700 ACFM, OFF-GAS AIR FROM SIZE REDUCTION SHREDDERS ENCL, PUB MILL ENCL & BOX BREAKDOWN CELL		A:	F:
SIZE:		B:	G:
COMPONENTS: FIRESCREEN, PREFILTER, HEPA FILTER, HEPA FILTER	DUTY: 24 HRS/DAY	C:	H:
DESIGN TEMPERATURE: 150°F		D:	I:
DESIGN PRESS: -15" WC		E:	J:
LOCATION: ACTIVE FILTER ROOM			
CONSTRUCTION			
CONSTRUCTION MATERIAL: 304 STAINLESS STEEL			
HOUSING: BAG-IN, BAG-OUT (2) SAMPLING PORTS/FILTER TRAIN			
WEIGHT: 1,600 LBS			

9413227.0928

UNITED ENGINEERS & CONSTRUCTORS A Raytheon Company Western Operations	EQUIPMENT DATA SHEET ☒ CDR ☐ TITLE I ☐ TITLE II ☐ TITLE III	ITEM NUMBER F-04-103A,B	PAGE 1 OF 1

CUSTOMER & LOCATION	PROJECT	UE&C JOB NO. 6237.006	DATE: 05/04/92
DOE-RL/WHC HANFORD, WA	WRAP FACILITY MODULE 2A	ACCOUNT NO.	BY: KDV

REVISIONS (DATE & BY)	A		B		C		D	
	E		F		G		H	

SERVICE	MANUFACTURER	NO. REQ'D.	SOURCE OF QUOTE
POLYMER ENCAPS OF OFF-GAS PREFILTER		2	

HEPA FILTER

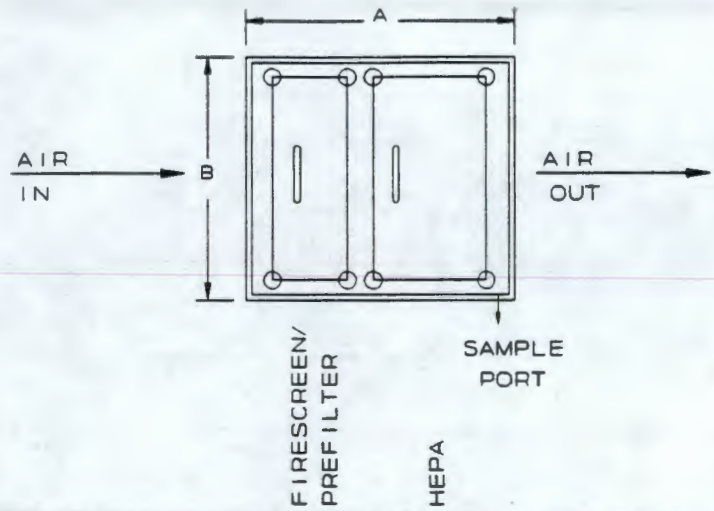

CONDITIONS OF SERVICE		DIMENSIONS	
APPLICATION: 200 ACFM, AIR WITH POLYMER CHEMICAL FUMES, 45°F		A:	F:
SIZE:		B:	G:
COMPONENTS: FIRESCREEN, PREFILTER, HEPA FILTER	DUTY: 24 HRS/DAY	C:	H:
DESIGN TEMPERATURE: 150°F		D:	I:
DESIGN PRESS: -15" WC		E:	J:
LOCATION: ACTIVE FILTER ROOM			
CONSTRUCTION			
CONSTRUCTION MATERIAL: 304 STAINLESS STEEL			
HOUSING: BAG-IN, BAG-OUT (1) SAMPLING PORT			
WEIGHT: 200 LBS			

UNITED ENGINEERS & CONSTRUCTORS A Raytheon Company Western Operations	EQUIPMENT DATA SHEET ☒ CDR ☐ TITLE I ☐ TITLE II ☐ TITLE III	ITEM NUMBER F-04-104A,B	PAGE 1 OF 1

CUSTOMER & LOCATION	PROJECT	UE&C JOB NO. 6237.006	DATE: 05/05/92
DOE-RL/WHC HANFORD, WA	WRAP FACILITY MODULE 2A	ACCOUNT NO.	BY: KDV

REVISIONS (DATE & BY)	A		B		C		D	
	E		F		G		H	

SERVICE	MANUFACTURER	NO. REQ'D.	SOURCE OF QUOTE
POLYMER ENCAPS OFF-GAS FINAL FILTER		2	

FILTER

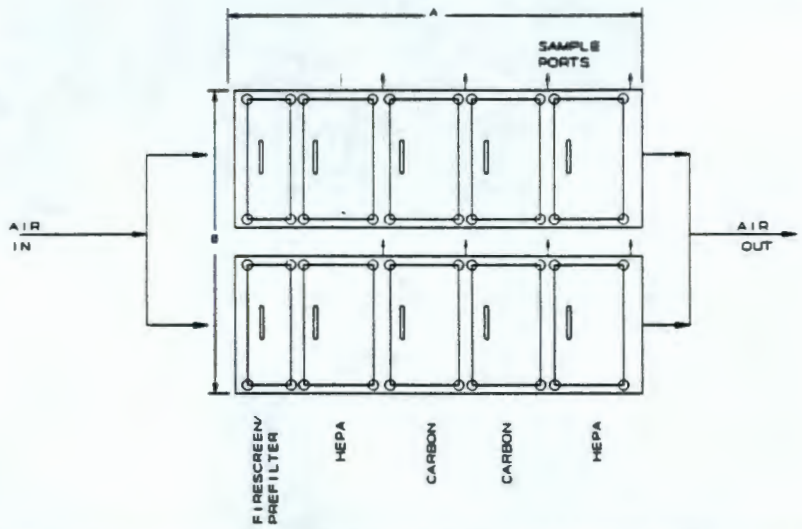

CONDITIONS OF SERVICE		DIMENSIONS	
APPLICATION: 200 ACFM, AIR WITH TRACE OF POLYMER CHEMICAL FUMES AND CARBON DUST, 45°F		A:	F:
SIZE:		B:	G:
COMPONENTS: HEPA FILTER	DUTY: 24 HRS/DAY	C:	H:
DESIGN TEMP: 150°F		D:	I:
DESIGN PRESS: -15" WC		E:	J:
LOCATION: ACTIVE FILTER ROOM			
CONSTRUCTION			
CONSTRUCTION MATERIAL: 304 STAINLESS STEEL			
HOUSING: BAG-IN, BAG-OUT (1) SAMPLE PORT			
WEIGHT: 150 LBS			

9413227.0930

UNITED ENGINEERS & CONSTRUCTORS A Raytheon Company Western Operations	EQUIPMENT DATA SHEET ☒ CDR ☐ TITLE I ☐ TITLE II ☐ TITLE III	ITEM NUMBER F-04-105A,B	PAGE 1 OF 1

CUSTOMER & LOCATION	PROJECT	UE&C JOB NO. 6237.006	DATE: 05/05/92
DOE-RL/WHC HANFORD, WA	WRAP FACILITY MODULE 2A	ACCOUNT NO.	BY: KDV

REVISIONS (DATE & BY)	A		B		C		D	
	E		F		G		H	

SERVICE	MANUFACTURER	NO. REQ'D.	SOURCE OF QUOTE
GROUT POWER TANKS OFF-GAS FILTER		2	

HEPA FILTER

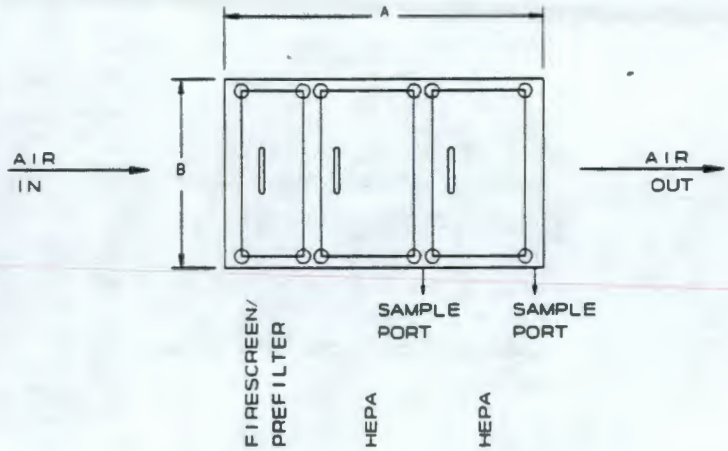

CONDITIONS OF SERVICE		DIMENSIONS	
APPLICATION: 200 ACFM, OFF-GAS (AIR) FROM VIBRO GROUT SILO DUST COLLECTORS S-05-201 203 AND 210 AND AGITATED GROUT SILO DUST COLLECTORS S-05-205, 206 AND 209		A:	F:
SIZE:		B:	G:
COMPONENTS: FIRESCREEN, PREFILTER, HEPA FILTER HEPA FILTER	DUTY: 24 HRS/DAY	C:	H:
DESIGN TEMPERATURE: 150°F		D:	I:
DESIGN PRESS: -15" WC		E:	J:
LOCATION: ACTIVE FILTER ROOM			
CONSTRUCTION			
CONSTRUCTION MATERIAL: CARBON STEEL			
HOUSING: (2) SAMPLING PORTS			
WEIGHT: 325 LBS			

UNITED ENGINEERS & CONSTRUCTORS A Raytheon Company Western Operations	EQUIPMENT DATA SHEET ☒ CDR ☐ TITLE I ☐ TITLE II ☐ TITLE III	ITEM NUMBER F-04-106	PAGE 1 OF 1

CUSTOMER & LOCATION	PROJECT	UE&C JOB NO. 6237.006	DATE: 05/05/92
DOE-RL/WHC HANFORD, WA	WRAP FACILITY MODULE 2A	ACCOUNT NO.	BY: KDV

REVISIONS (DATE & BY)	A		B		C		D	
	E		F		G		H	

SERVICE	MANUFACTURER	NO. REQ'D.	SOURCE OF QUOTE
GROUT ENCLOSURE OFF-GAS FILTER		1	

HEPA FILTER

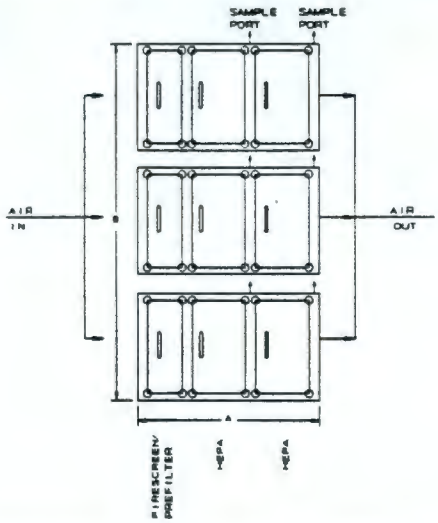

CONDITIONS OF SERVICE		DIMENSIONS	
APPLICATION: 2,500 ACFM, OFF-GAS (AIR) FROM GROUT ENCLOSURE GB-05-201		A:	F:
SIZE:		B:	G:
COMPONENTS: FIRESCREEN, PREFILTER, HEPA FILTER, HEPA FILTER	DUTY: 24 HRS/DAY	C:	H:
DESIGN TEMPERATURE: 150°F		D:	I:
DESIGN PRESS: -15" WC		E:	J:
LOCATION: ACTIVE FILTER ROOM			
CONSTRUCTION			
CONSTRUCTION MATERIAL: CARBON STEEL			
HOUSING: BAG-IN, BAG-OUT (2) SAMPLING PORTS/PREFILTER TRAIN			
WEIGHT: 975 LBS			

9413227.0932

UNITED ENGINEERS & CONSTRUCTORS A Raytheon Company Western Operations	EQUIPMENT DATA SHEET ☒ CDR ☐ TITLE I ☐ TITLE II ☐ TITLE III	ITEM NUMBER F-04-107A,B	PAGE 1 OF 1

CUSTOMER & LOCATION	PROJECT	UE&C JOB NO. 6237.006	DATE: 05/05/92
DOE-RL/WHC HANFORD, WA	WRAP FACILITY MODULE 2A	ACCOUNT NO.	BY: KDV

REVISIONS (DATE & BY)	A		B		C		D	
	E		F		G		H	

SERVICE	MANUFACTURER	NO. REQ'D.	SOURCE OF QUOTE
SPECIAL WASTE ENCLOSURE OFF-GAS FILTER		2	

FILTER

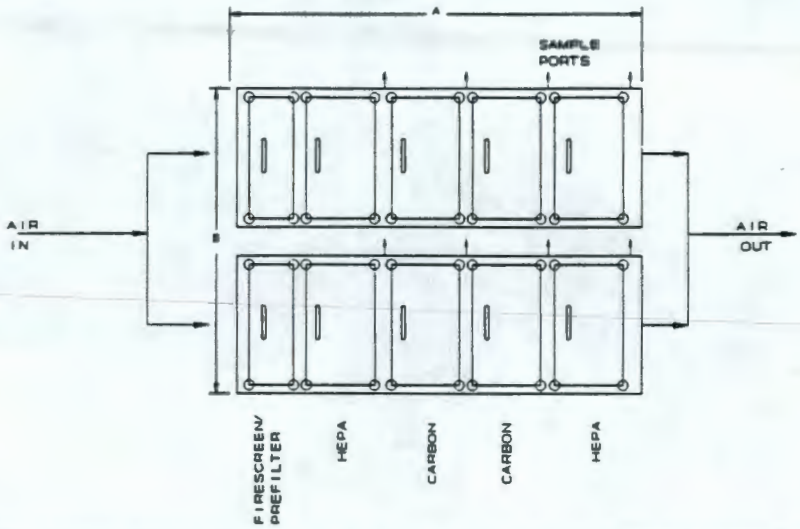

CONDITIONS OF SERVICE		DIMENSIONS	
APPLICATION: 1,620 ACFM, OFF-GAS (AIR) FROM SPECIAL WASTE SHREDDER ENCL GB-06-101, HUMIDIFIER CHAMBER GB-06-301 & REACTIVE METALS ENCL GB-06-302		A:	F:
SIZE:		B:	G:
COMPONENTS: FIRESCREEN, PREFILTER, HEPA FILTER, CARBON FILTER, CARBON FILTER, HEPA FILTER	DUTY: 24 HRS/DAY	C:	H:
DESIGN TEMP: 150°F		D:	I:
DESIGN PRESS: -15" WC		E:	J:
LOCATION: ACTIVE FILTER ROOM			
CONSTRUCTION			
CONSTRUCTION MATERIAL: 304 STAINLESS STEEL			
HOUSING: BAG-IN, BAG-OUT (4) SAMPLING PORTS/FILTER TRAIN			
WEIGHT: 1,200 LBS			

UNITED ENGINEERS & CONSTRUCTORS A Raytheon Company Western Operations	EQUIPMENT DATA SHEET ☒ CDR ☐ TITLE I ☐ TITLE II ☐ TITLE III	ITEM NUMBER F-04-108	PAGE 1 OF 1

CUSTOMER & LOCATION	PROJECT	UE&C JOB NO. 6237.006	DATE: 05/05/92
DOE-RL/WHC HANFORD, WA	WRAP FACILITY MODULE 2A	ACCOUNT NO.	BY: KDV

REVISIONS (DATE & BY)	A		B		C		D	
	E		F		G		H	

SERVICE	MANUFACTURER	NO. REQ'D.	SOURCE OF QUOTE
SAMPLE MGMT HOODS OFF-GAS FILTER		1	

FILTER

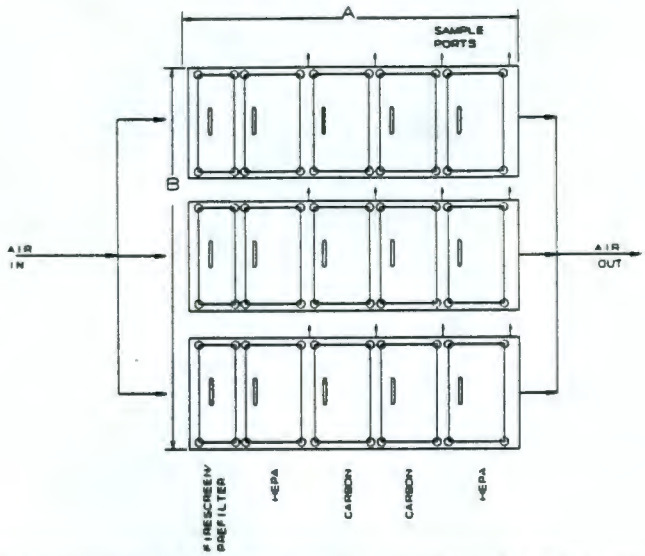

CONDITIONS OF SERVICE		DIMENSIONS	
APPLICATION: 2,505 ACFM, OFF-GAS (AIR) FROM (6) SAMPLE MANAGEMENT HOODS		A:	F:
SIZE:		B:	G:
COMPONENTS: FIRESCREEN, PREFILTER, HEPA FILTER, CARBON FILTER, CARBON FILTER, HEPA FILTER	DUTY: 24 HRS/DAY	C:	H:
DESIGN TEMP: 150°F		D:	I:
DESIGN PRESS: -15" WC		E:	J:
LOCATION: ACTIVE FILTER ROOM			
CONSTRUCTION			
CONSTRUCTION MATERIAL: 304 STAINLESS STEEL			
HOUSING: BAG-IN, BAG-OUT (4) SAMPLING PORTS/FILTER TRAIN			
WEIGHT: 1,200 LBS			

9413227.0934

UNITED ENGINEERS & CONSTRUCTORS A Raytheon Company Western Operations	EQUIPMENT DATA SHEET ☒ CDR ☐ TITLE I ☐ TITLE II ☐ TITLE III	ITEM NUMBER F-04-109A,B	PAGE 1 OF 1

CUSTOMER & LOCATION	PROJECT	UE&C JOB NO. 6237.006	DATE: 05/05/92
DOE-RL/WHC HANFORD, WA	WRAP FACILITY MODULE 2A	ACCOUNT NO.	BY: KDV

REVISIONS (DATE & BY)	A		B		C		D	
	E		F		G		H	

SERVICE	MANUFACTURER	NO. REQ'D.	SOURCE OF QUOTE
NONACTIVE TANKS OFF-GAS FILTER		2	

HEPA FILTER

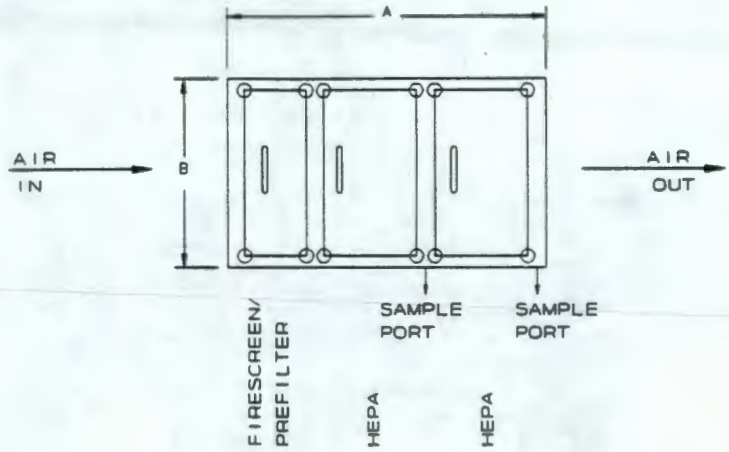

CONDITIONS OF SERVICE		DIMENSIONS	
APPLICATION: 20 ACFM, OFF-GAS (AIR) FROM AMU TANKS T-12-101, 102 AND 103 AND NONACTIVE WASTE COLLECTION		A:	F:
SIZE:		B:	G:
COMPONENTS: PREFILTER, HEPA FILTER HEPA FILTER	DUTY: 24 HRS/DAY	C:	H:
DESIGN TEMPERATURE: 150°F		D:	I:
DESIGN PRESS: -15" WC		E:	J:
LOCATION: ACTIVE FILTER ROOM			
CONSTRUCTION			
CONSTRUCTION MATERIAL: 304 STAINLESS STEEL			
HOUSING: BAG-IN, BAG-OUT (2) SAMPLING PORTS			
WEIGHT: 325 LBS			

UNITED ENGINEERS & CONSTRUCTORS A Raytheon Company Western Operations	EQUIPMENT DATA SHEET ☒ CDR ☐ TITLE I ☐ TITLE II ☐ TITLE III	ITEM NUMBER F-04-121	PAGE 1 OF 1

CUSTOMER & LOCATION	PROJECT	UE&C JOB NO. 6237.006	DATE: 05/04/92
DOE-RL/WHC HANFORD, WA	WRAP FACILITY MODULE 2A	ACCOUNT NO.	BY: KDV

REVISIONS (DATE & BY)	A		B		C		D	
	E		F		G		H	

SERVICE	MANUFACTURER	NO. REQ'D.	SOURCE OF QUOTE
ACID FEED TANK INLET AIR FILTER		1	

INLET AIR HEPA FILTER

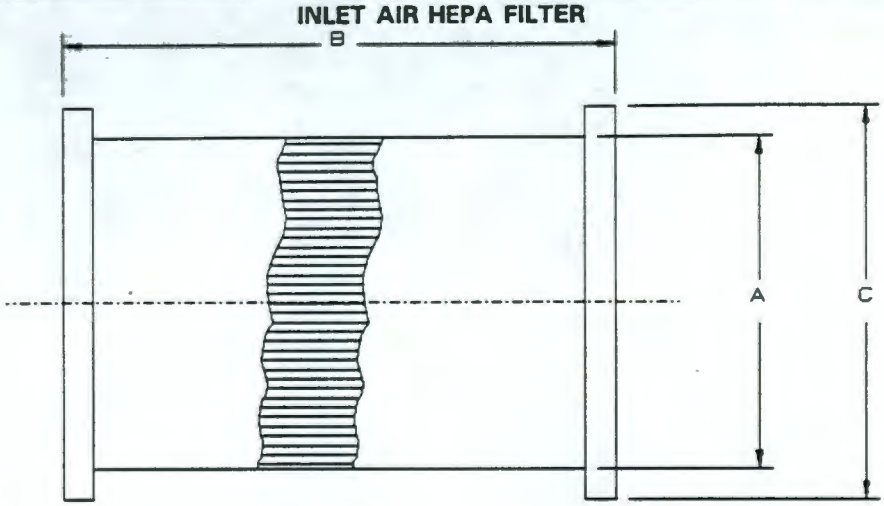

CONDITIONS OF SERVICE		DIMENSIONS	
APPLICATION: 1 ACFM, INLET AIR @ 50 PERCENT RH, 60°F		A: 6"	F:
SIZE: 6" DIA X 6" LONG - FILTER ELEMENT		B: 5-7/8"	G:
COMPONENTS: HEPA FILTER	DUTY: 24 HRS/DAY	C: 7-7/8"	H:
DESIGN TEMPERATURE: 150°F		D:	I:
DESIGN PRESS: -15" WC		E:	J:
LOCATION: FEED TANK AREA			
CONSTRUCTION			
CONSTRUCTION MATERIAL: POLYETHYLENE			
WEIGHT: 10 LBS			

9413227.0936

UNITED ENGINEERS & CONSTRUCTORS A Raytheon Company Western Operations	EQUIPMENT DATA SHEET ☒ CDR ☐ TITLE I ☐ TITLE II ☐ TITLE III	ITEM NUMBER F-04-122	PAGE 1 OF 1

CUSTOMER & LOCATION	PROJECT	UE&C JOB NO. 6237.006	DATE: 05/04/92
DOE-RL/WHC HANFORD, WA	WRAP FACILITY MODULE 2A	ACCOUNT NO.	BY: KDV

REVISIONS (DATE & BY)	A		B		C		D	
	E		F		G		H	

SERVICE	MANUFACTURER	NO. REQ'D.	SOURCE OF QUOTE
CAUSTIC FEED TANK INLET AIR FILTER		1	

INLET AIR HEPA FILTER

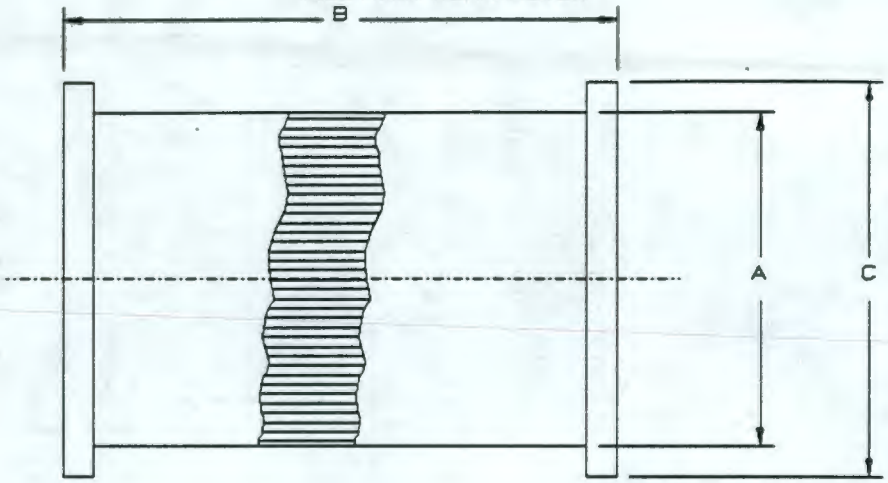

CONDITIONS OF SERVICE		DIMENSIONS	
APPLICATION: 1 ACFM, INLET AIR @ 50 PERCENT RH, 60°F		A: 6"	F:
SIZE: 6" DIA X 6" LONG - FILTER ELEMENT		B: 5-7/8"	G:
COMPONENTS: HEPA FILTER	DUTY: 24 HRS/DAY	C: 7-7/8"	H:
DESIGN TEMPERATURE: 150°F		D:	I:
DESIGN PRESS: -15" WC		E:	J:
LOCATION: FEED TANK AREA			
CONSTRUCTION			
CONSTRUCTION MATERIAL: CARBON STEEL			
WEIGHT: 10 LBS			

9413227.0937

UNITED ENGINEERS & CONSTRUCTORS A Raytheon Company Western Operations	EQUIPMENT DATA SHEET ☒ CDR ☐ TITLE I ☐ TITLE II ☐ TITLE III	ITEM NUMBER F-04-123	PAGE 1 OF 1

CUSTOMER & LOCATION	PROJECT	UE&C JOB NO. 6237.006	DATE: 05/04/92
DOE-RL/WHC HANFORD, WA	WRAP FACILITY MODULE 2A	ACCOUNT NO.	BY: KDV

REVISIONS (DATE & BY)	A		B		C		D	
	E		F		G		H	

SERVICE	MANUFACTURER	NO. REQ'D.	SOURCE OF QUOTE
DECON SOLUTION FEED TANK INLET AIR FILTER		1	

INLET AIR HEPA FILTER

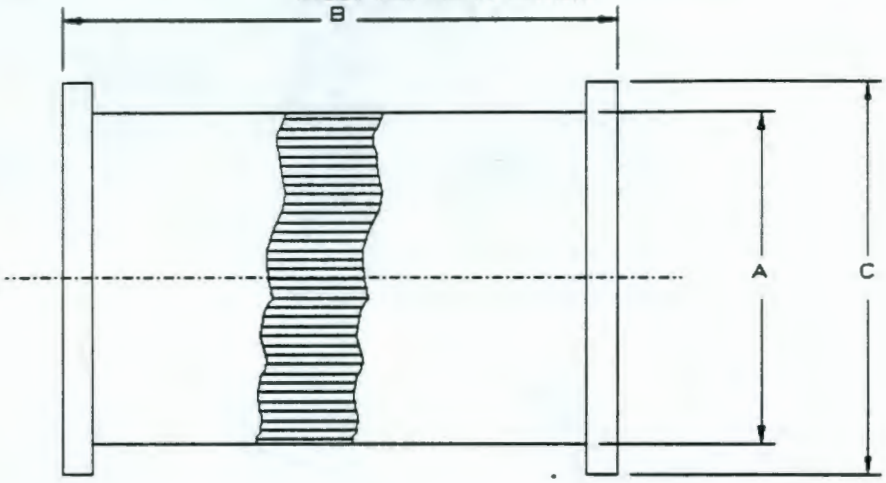

CONDITIONS OF SERVICE		DIMENSIONS	
APPLICATION: 3 ACFM, INLET AIR @ 50 PERCENT RH, 60°F		A: 6"	F:
SIZE: 6" DIA X 6" LONG - FILTER ELEMENT		B: 5-7/8"	G:
COMPONENTS: HEPA FILTER	DUTY: 24 HRS/DAY	C: 7-7/8"	H:
DESIGN TEMPERATURE: 150°F		D:	I:
DESIGN PRESS: -15" WC		E:	J:
LOCATION: FEED TANK AREA			
CONSTRUCTION			
CONSTRUCTION MATERIAL: 304 STAINLESS STEEL			
WEIGHT: 10 LBS			

9413227.0938

UNITED ENGINEERS & CONSTRUCTORS A Raytheon Company Western Operations	EQUIPMENT DATA SHEET ☒ CDR ☐ TITLE I ☐ TITLE II ☐ TITLE III	ITEM NUMBER F-04-124A,B	PAGE 1 OF 1

CUSTOMER & LOCATION	PROJECT	UE&C JOB NO. 6237.006	DATE: 05/04/92
DOE-RL/WHC HANFORD, WA	WRAP FACILITY MODULE 2A	ACCOUNT NO.	BY: KDV

REVISIONS (DATE & BY)	A		B		C		D	
	E		F		G		H	

SERVICE	MANUFACTURER	NO. REQ'D.	SOURCE OF QUOTE
NONACTIVE WASTE COLLECTION TANKS INLET AIR FILTER		2	

INLET AIR HEPA FILTER

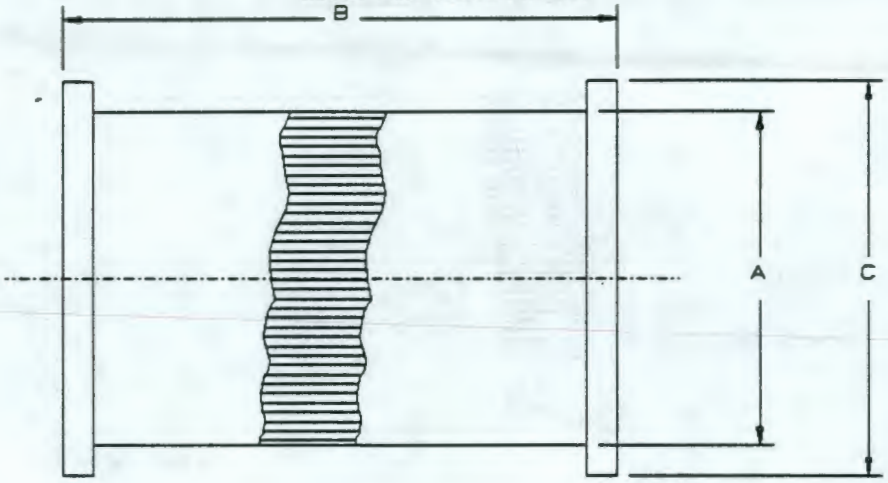

CONDITIONS OF SERVICE		DIMENSIONS	
APPLICATION: 5 ACFM, INLET AIR @ 50 PERCENT RH, 60°F		A: 6"	F:
SIZE: 6" DIA X 6" LONG - FILTER ELEMENT		B: 5-7/8"	G:
COMPONENTS: HEPA FILTER	DUTY: 24 HRS/DAY	C: 7-7/8"	H:
DESIGN TEMPERATURE: 150°F		D:	I:
DESIGN PRESS: -15" WC		E:	J:
LOCATION: WASTE COLLECTION TANK AREA			
CONSTRUCTION			
CONSTRUCTION MATERIAL: 304 STAINLESS STEEL			
WEIGHT: 10 LBS			

UNITED ENGINEERS & CONSTRUCTORS A Raytheon Company Western Operations	EQUIPMENT DATA SHEET ☒ CDR ☐ TITLE I ☐ TITLE II ☐ TITLE III	ITEM NUMBER F-04-125	PAGE 1 OF 1

CUSTOMER & LOCATION	PROJECT	UE&C JOB NO. 6237.006	DATE: 05/04/92
DOE-RL/WHC HANFORD, WA	WRAP FACILITY MODULE 2A	ACCOUNT NO.	BY: KDV

REVISIONS (DATE & BY)	A		B		C		D	
	E		F		G		H	

SERVICE	MANUFACTURER	NO. REQ'D.	SOURCE OF QUOTE
ACTIVE WASTE COLLECTION TANK INLET AIR FILTER		1	

INLET AIR HEPA FILTER

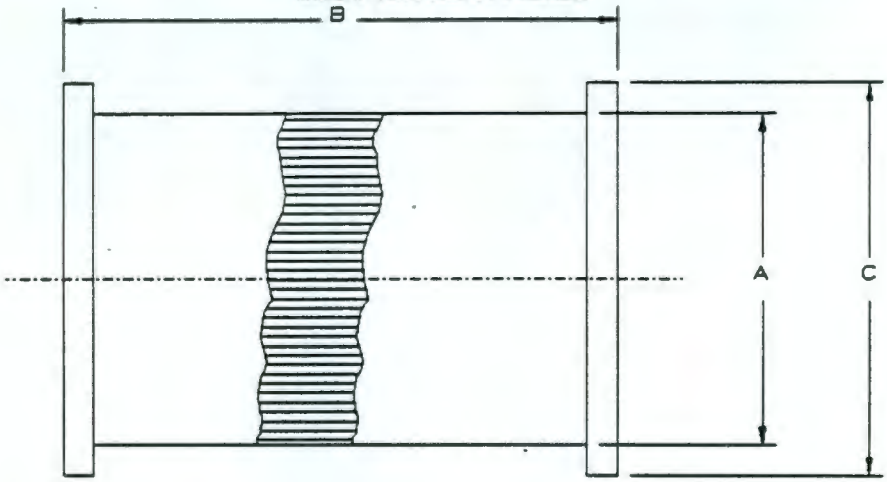

CONDITIONS OF SERVICE		DIMENSIONS	
APPLICATION: 140 ACFM, INLET AIR @ 50 PERCENT RH, 60°F		A: 12"	F:
SIZE: 12" DIA X 11.5" LONG - FILTER ELEMENT		B: 11.5"	G:
COMPONENTS: HEPA FILTER	DUTY: 24 HRS/DAY	C: 13-7/8"	H:
DESIGN TEMPERATURE: 150°F		D:	I:
DESIGN PRESS: -15" WC		E:	J:
LOCATION: WASTE COLLECTION TANK AREA			
CONSTRUCTION			
CONSTRUCTION MATERIAL: 304 STAINLESS STEEL			
WEIGHT: 15 LBS			

9413227.0940

UNITED ENGINEERS & CONSTRUCTORS A Raytheon Company Western Operations	EQUIPMENT DATA SHEET ☒ CDR ☐ TITLE I ☐ TITLE II ☐ TITLE III	ITEM NUMBER F-04-126	PAGE 1 OF 1

CUSTOMER & LOCATION	PROJECT	UE&C JOB NO. 6237.006	DATE: 05/04/92
DOE-RL/WHC HANFORD, WA	WRAP FACILITY MODULE 2A	ACCOUNT NO.	BY: KDV

REVISIONS (DATE & BY)	A		B		C		D	
	E		F		G		H	

SERVICE	MANUFACTURER	NO. REQ'D.	SOURCE OF QUOTE
TREATED ACTIVE WASTE TANK INLET AIR FILTER		1	

INLET AIR HEPA FILTER

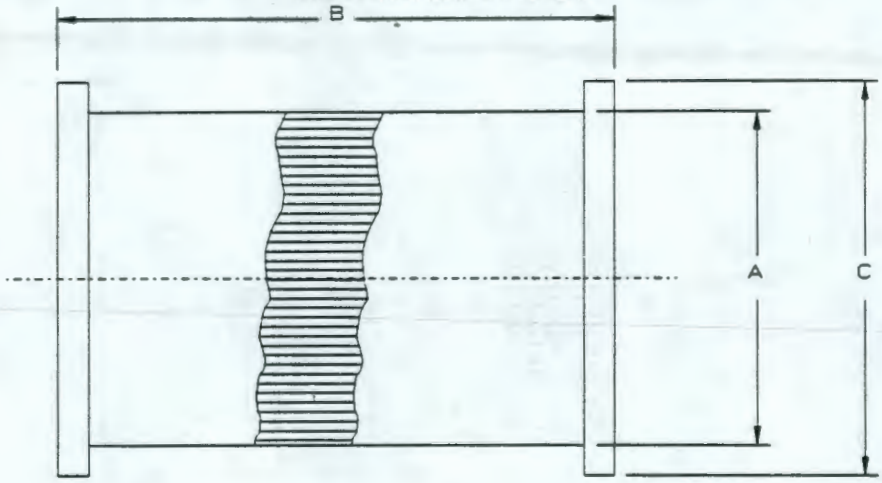

CONDITIONS OF SERVICE		DIMENSIONS	
APPLICATION: 30 ACFM, INLET AIR @ 50 PERCENT RH, 60°F		A: 8"	F:
SIZE: 8" DIA X 6" LONG - FILTER ELEMENT		B: 5-7/8"	G:
COMPONENTS: HEPA FILTER	DUTY: 24 HRS/DAY	C: 9-7/8"	H:
DESIGN TEMPERATURE: 150°F		D:	I:
DESIGN PRESS: -15" WC		E:	J:
LOCATION: WASTE COLLECTION TANK AREA			
CONSTRUCTION			
CONSTRUCTION MATERIAL: 304 STAINLESS STEEL			
WEIGHT: 12 LBS			

UNITED ENGINEERS & CONSTRUCTORS A Raytheon Company Western Operations	EQUIPMENT DATA SHEET ☒ CDR ☐ TITLE I ☐ TITLE II ☐ TITLE III	ITEM NUMBER F-04-127	PAGE 1 OF 1

CUSTOMER & LOCATION	PROJECT	UE&C JOB NO. 6237.006	DATE: 05/04/92
DOE-RL/WHC HANFORD, WA	WRAP FACILITY MODULE 2A	ACCOUNT NO.	BY: KDV

REVISIONS (DATE & BY)	A		B		C		D	
	E		F		G		H	

SERVICE	MANUFACTURER	NO. REQ'D.	SOURCE OF QUOTE
SIZE REDUCTION & GROUT ENCL INLET AIR FILTER		1	

INLET AIR HEPA FILTER

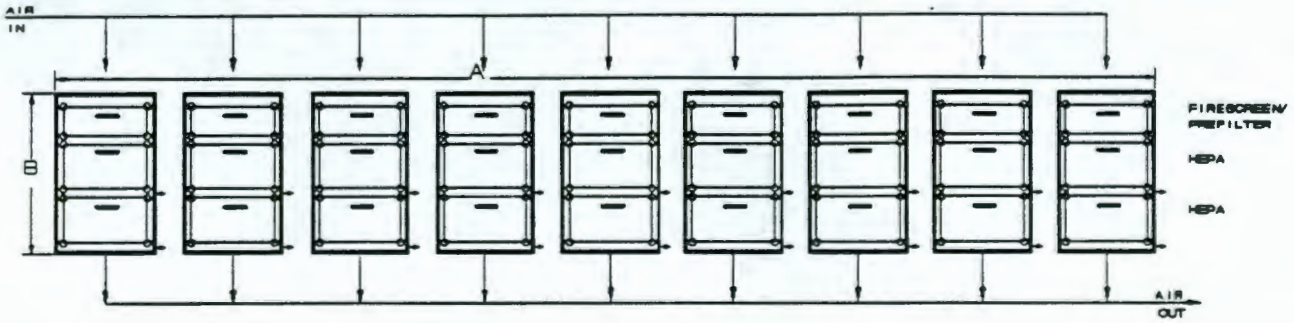

CONDITIONS OF SERVICE		DIMENSIONS	
APPLICATION: 8,500 ACFM, INLET AIR @ 50 PERCENT RH, 60°F		A:	F:
SIZE: 2'-0" X 2'-0" X 2" - PREFILTER ELEMENT, 2'-0" X 2'-0" X 1'-0" - FILTER ELEMENT		B:	G:
COMPONENTS: PREFILTER, HEPA FILTER	DUTY: 24 HRS/DAY	C:	H:
DESIGN TEMPERATURE: 150°F		D:	I:
DESIGN PRESS: -15" WC		E:	J:
LOCATION: SIZE REDUCTION AREA			
CONSTRUCTION			
CONSTRUCTION MATERIAL: CARBON STEEL			
WEIGHT: 1,400 LBS			

9413227.0942

UNITED ENGINEERS & CONSTRUCTORS A Raytheon Company Western Operations	EQUIPMENT DATA SHEET ☒ CDR ☐ TITLE I ☐ TITLE II ☐ TITLE III	ITEM NUMBER F-04-128	PAGE 1 OF 1
CUSTOMER & LOCATION DOE-RL/WHC HANFORD, WA	PROJECT WRAP FACILITY MODULE 2A	UE&C JOB NO. 6237.006	DATE: 05/04/92
		ACCOUNT NO.	BY: KDV

REVISIONS (DATE & BY)	A		B		C		D	
	E		F		G		H	

SERVICE	MANUFACTURER	NO. REQ'D.	SOURCE OF QUOTE
POLYMER ENCLOSURE INLET AIR FILTER		1	

INLET AIR HEPA FILTER

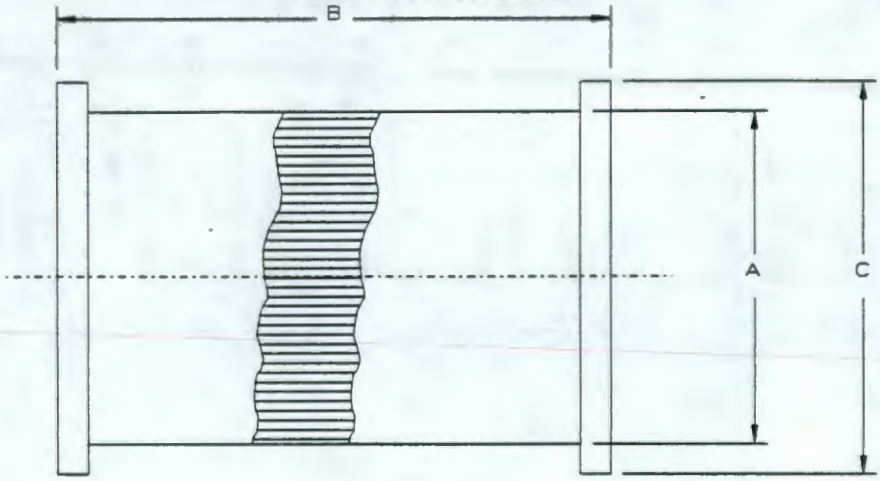

CONDITIONS OF SERVICE		DIMENSIONS	
APPLICATION: 200 ACFM, INLET AIR @ 50 PERCENT RH, 60°F		A: 12"	F:
SIZE: 12" DIA X 11.5" LONG - FILTER ELEMENT		B: 11.5"	G:
COMPONENTS: HEPA FILTER	DUTY: 24 HRS/DAY	C: 13-7/8"	H:
DESIGN TEMPERATURE: 150°F		D:	I:
DESIGN PRESS: -15" WC		E:	J:
LOCATION: POLYMER AREA			
CONSTRUCTION			
CONSTRUCTION MATERIAL: CARBON STEEL			
WEIGHT:			

UNITED ENGINEERS & CONSTRUCTORS A Raytheon Company Western Operations	EQUIPMENT DATA SHEET ☒ CDR ☐ TITLE I ☐ TITLE II ☐ TITLE III	ITEM NUMBER F-04-129	PAGE 1 OF 1

CUSTOMER & LOCATION	PROJECT	UE&C JOB NO. 6237.006	DATE: 05/12/92
DOE-RL/WHC HANFORD, WA	WRAP FACILITY MODULE 2A	ACCOUNT NO.	BY: KDV

REVISIONS (DATE & BY)	A		B		C		D	
	E		F		G		H	

SERVICE	MANUFACTURER	NO. REQ'D.	SOURCE OF QUOTE
SPECIAL WASTE SHREDDER ENCL INLET AIR FILTER		1	

INLET AIR HEPA FILTER

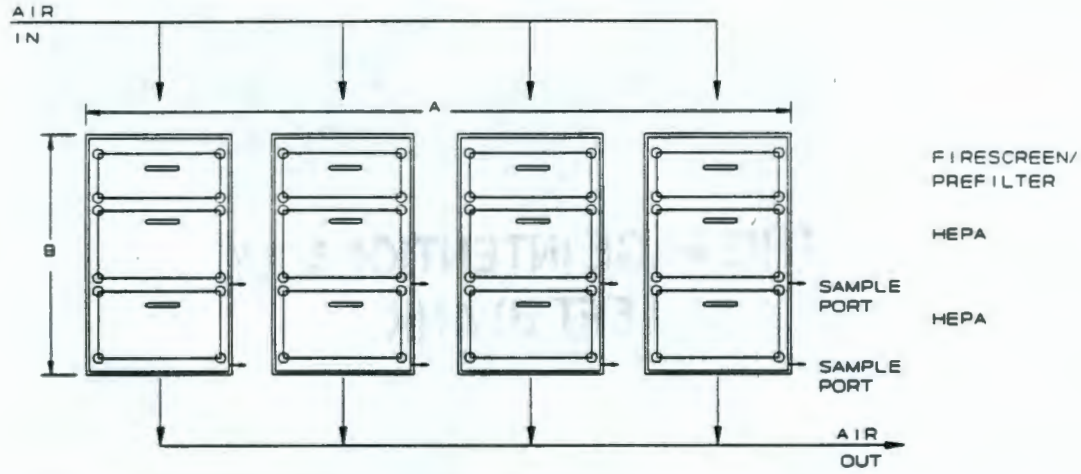

CONDITIONS OF SERVICE		DIMENSIONS	
APPLICATION: 1,000 ACFM, INLET AIR @ 50 PERCENT RH, 60°F		A:	F:
SIZE: 2'-0" X 2'-0' X 1'-0" - FILTER ELEMENT		B:	G:
COMPONENTS: PREFILTER, HEPA FILTER	DUTY: 24 HRS/DAY	C:	H:
DESIGN TEMPERATURE: 150°F		D:	I:
DESIGN PRESS: -15" WC		E:	J:
LOCATION: SPECIAL WASTE AREA			
CONSTRUCTION			
CONSTRUCTION MATERIAL: CARBON STEEL			
HOUSING:			
WEIGHT: 150 LBS			

THIS PAGE INTENTIONALLY
LEFT BLANK

SECTION 15900

9M 3227 .0945

THIS PAGE INTENTIONALLY
LEFT BLANK

WRAP MODULE 2A

SPECIFICATION SECTION
FOR
15900 CONTROLS AND INSTRUMENTATION (HVAC)

TABLE OF CONTENTS

PART 1 GENERAL

1.01 SECTION SCOPE
1.02 RELATED SECTIONS
1.03 REFERENCES
1.04 SYSTEM DESCRIPTION
1.05 SUBMITTALS
1.06 DELIVERY, STORAGE AND HANDLING
1.07 SITE CONDITIONS

PART 2 PRODUCTS

2.01 MANUFACTURERS
2.02 MATERIALS
2.03 EQUIPMENT
2.04 COMPONENTS
2.05 FABRICATION
2.06 SHOP QUALITY CONTROL

PART 3 EXECUTION

3.01 PREPARATION
3.02 ERECTION, INSTALLATION AND APPLICATION
3.03 FIELD QUALITY CONTROL
3.04 ADJUSTING AND CLEANING
3.05 DEMONSTRATION
3.06 PROTECTION

WRAP MODULE 2A

SECTION 15900

CONTROLS AND INSTRUMENTATION (HVAC)

PART 1 GENERAL

1.01 SECTION SCOPE

A. This specification establishes the requirements for detailed design, fabrication, installation, start-up and acceptance testing of temperature, pressure and airflow control systems as described in contract documents including control systems for air handlers, VAV unit heaters, baseboard heaters, high efficiency filter train exhaust fans and supply air fan room pressure control systems.

9413227.0947

1.02 RELATED SECTIONS

1.03 REFERENCES

A. National Electric Code (NEC)

B. Underwriters Laboratories
UL 508 Industrial Control Equipment

C. American Society of Heating, Refrigeration and Air Conditioning Engineers (ASHRAE)

1.04 SYSTEM DESCRIPTION

A. HVAC control system shall provide monitoring, alarm and supervisory control functions for the facility HVAC system. System shall be a interactive, distributed control, digital control system.

PART 2 PRODUCTS

2.02 MATERIALS

A. Instrument air piping shall be copper tubing.

B. All control equipment shall be provided by one manufacturer.

END OF SECTION

SECTION 15990

94/3227.0948

THIS PAGE INTENTIONALLY
LEFT BLANK

WRAP MODULE 2A

SPECIFICATION SECTION
FOR
15990 TESTING AND BALANCING (HVAC)

TABLE OF CONTENTS

PART 1 GENERAL

1.01 SECTION SCOPE
1.02 RELATED SECTIONS
1.03 REFERENCES
1.04 SYSTEM DESCRIPTION
1.05 SUBMITTALS
1.06 DELIVERY, STORAGE AND HANDLING
1.07 SITE CONDITIONS

PART 2 PRODUCTS

2.01 MANUFACTURERS
2.02 MATERIALS
2.03 EQUIPMENT
2.04 COMPONENTS
2.05 FABRICATION
2.06 SHOP QUALITY CONTROL

PART 3 EXECUTION

3.01 PREPARATION
3.02 ERECTION, INSTALLATION AND APPLICATION
3.03 FIELD QUALITY CONTROL
3.04 ADJUSTING AND CLEANING
3.05 DEMONSTRATION
3.06 PROTECTION

9413227.0949

WRAP MODULE 2A

SECTION 15990

TESTING AND BALANCING (HVAC)

PART 1 GENERAL

1.01 SECTION SCOPE

A. This specification establishes the requirements for the mechanical systems to be adjusted and balanced by an independent balancing agency at completion of installation. Independent shall mean balancing agency is not associated with any engineering, contracting or manufacturing firm, and derives its income solely from testing, adjusting and balancing mechanical systems.

1.02 RELATED SECTIONS

1.03 REFERENCES

A. Sheet Metal and Air Conditioning Contractors National Association (SMACNA)

B. Associated Air Balance Council (AABC)

1.04 SYSTEM DESCRIPTION

A. Systems to be balanced consist of all air and water systems associated with facility HVAC design.

B. Air system components consist of air handling units, HEPA filter exhaust units, fans, dampers, louvers, air filters and ductwork.

C. Water system components consist of chillers, cooling tower, pumps, valves, cooling coils, heat recovery coils, expansion tank, air separator, valves, piping and accessories.

END OF SECTION

9413227.0950