0010816

WHC-EP-0342
Addendum 13

# 222-S Laboratory Wastewater Stream-Specific Report

SEP 1990
RECEIVED
EDMC

Prepared for the U.S. Department of Energy
Office of Environmental Restoration
and Waste Management

Westinghouse
Hanford Company Richland, Washington

Hanford Operations and Engineering Contractor for the
U.S. Department of Energy under Contract DE-AC06-87RL10930

Approved for Public Release

**DISCLAIMER**

This report was prepared as an account of work sponsored by an agency of the United States Government. Neither the United States Government nor any agency thereof, nor any of their employees, nor any of their contractors, subcontractors or their employees, makes any warranty, express or implied, or assumes any legal liability or responsibility for the accuracy, completeness, or any third party's use or the results of such use of any information, apparatus, product, or process disclosed, or represents that its use would not infringe privately owned rights. Reference herein to any specific commercial product, process, or service by trade name, trademark, manufacturer, or otherwise, does not necessarily constitute or imply its endorsement, recommendation, or favoring by the United States Government or any agency thereof or its contractors or subcontractors. The views and opinions of authors expressed herein do not necessarily state or reflect those of the United States Government or any agency thereof.

This report has been reproduced from the best available copy.
Available in paper copy and microfiche.
The U.S. Department of Energy and its contractors can obtain copies of this report from:
Office of Scientific and Technical Information
P.O. Box 62
Oak Ridge, TN 37831
(615) 576-8401
This report is publicly available from:
National Technical Information Service
5285 Port Royal Road
Springfield, VA 22161
(703) 487-4650

Printed in the United States of America

DISCLM-1.CHP (7-90)

START

0010816
192

WHC-EP-0342
Addendum 13

# 222-S Laboratory Wastewater Stream-Specific Report

SEP 1990
RECEIVED
EDMC

Prepared for the U.S. Department of Energy
Office of Environmental Restoration
and Waste Management

Westinghouse
Hanford Company Richland, Washington

Hanford Operations and Engineering Contractor for the
U.S. Department of Energy under Contract DE-AC06-87RL10930

Approved for Public Release

THIS PAGE INTENTIONALLY
LEFT BLANK

WHC-EP-0342
Addendum 13

UC-630

# 222-S Laboratory Wastewater Stream-Specific Report

M. J. Hall

Date Published
August 1990

Prepared for the U.S. Department of Energy
Office of Environmental Restoration
and Waste Management

Westinghouse Hanford Company
P.O. Box 1970
Richland, Washington 99352

Hanford Operations and Engineering Contractor for the
U.S. Department of Energy under Contract DE-AC06-87RL10930

Approved for Public Release

THIS PAGE INTENTIONALLY
LEFT BLANK

# 222-S LABORATORY WASTEWATER STREAM-SPECIFIC REPORT

M. J. Hall

## ABSTRACT

*The proposed wastestream designation for the 222-S Laboratory wastestream is that this stream is not a dangerous waste, pursuant to the Washington (State) Administration Code (WAC) 173-303*, Dangerous Waste Regulations.* *A combination of process knowledge and sampling data was used to make this determination.*

---

*Ecology, 1989, *Dangerous Waste Regulations*, Washington (State) Administrative Code (WAC) 173-303, Washington State Department of Ecology, Olympia, Washington.

This page intentionally left blank.

## EXECUTIVE SUMMARY

The proposed designation for the 222-S Laboratory wastestream located in the 200 West Area is that the stream is not a dangerous waste, pursuant to the Washington (State) Administrative Code (WAC) 173-303, *Dangerous Waste Regulations*.* A combination of process and sampling data was used to determine if the effluent contains a listed dangerous waste (WAC 173-303-080). Sampling data alone is compared to the dangerous waste criteria (WAC 173-303-100) and dangerous waste characteristics (WAC 173-303-090). The basis for the sampling data was 4 samples taken from the 207-SL Retention Basin between October 9, 1989, and March 21, 1990.

*Ecology, 1989, *Dangerous Waste Regulations*, Washington (State) Administrative Code (WAC) 173-303, Washington State Department of Ecology, Olympia, Washington.

This page intentionally left blank.

## LIST OF TERMS

| | |
|---|---|
| BAT | Best Available Technology |
| BDL | below detection limits |
| CERCLA | *Comprehensive Environmental Response Compensation and Liability Act* |
| DCG | Derived Concentration Guides |
| DOE | U.S. Department of Energy |
| DWC | dangerous waste constituents |
| DWS | Drinking Water Standards |
| EC | equivalent concentration |
| Ecology | Washington State Department of Ecology |
| EP | extraction procedures |
| EPA | U.S. Environmental Protection Agency |
| FY | fiscal year |
| GC/MS | gas chromatography/mass spectrometry |
| HH | halogenated hydrocarbons |
| IARC | International Agency for Research on Cancer |
| MCL | maximum concentration limits |
| MSDS | Material Safety Data Sheet |
| PAH | polycyclic aromatic hydrocarbons |
| PCL | Process Control Laboratories |
| PUREX | Plutonium-Uranium Extraction |
| REDOX | Reduction-Oxidation |
| SARA | Superfund Amendments and Reauthorization Act |
| SC | specific carcinogen |
| TC | total concentration |
| TDS | total dissolved solids |
| TEDS | Treated Effluent Disposal System |
| U90%CI | upper limit 90% confidence interval |
| WAC | Washington (State) Administrative Code |

This page intentionally left blank.

9 1 1 1 1 7 5 1 2 7 6

## CONTENTS

1.0 INTRODUCTION . . . . . 1-1
1.1 BACKGROUND . . . . . 1-1
1.2 APPROACH . . . . . 1-1
1.3 SCOPE . . . . . 1-4

2.0 PROCESS DATA . . . . . 2-1
2.1 PHYSICAL LAYOUT . . . . . 2-1
2.1.1 222-S Laboratory . . . . . 2-1
2.1.2 219-S Waste Treatment Building . . . . . 2-4
2.1.3 291-S Exhaust Fan Control House and Stack . . . . . 2-5
2.1.4 222-SA Analytical Chemical Standards Laboratory . . . 2-5
2.1.5 207-SL Retention Basin . . . . . 2-5
2.1.6 216-S-26 Crib . . . . . 2-6
2.2 CONTRIBUTORS . . . . . 2-6
2.2.1 Process Chemicals . . . . . 2-6
2.2.2 Laboratory Chemical Stocks . . . . . 2-8
2.2.3 Maintenance Chemicals . . . . . 2-9
2.2.4 Janitorial Supplies and Aerosols . . . . . 2-9
2.2.5 Radionuclides . . . . . 2-9
2.3 PROCESS DESCRIPTION . . . . . 2-9
2.3.1 Present Activities . . . . . 2-9
2.3.2 Past Activities . . . . . 2-10
2.3.3 Future Activities . . . . . 2-10
2.4 PROCESS DATA . . . . . 2-11

3.0 SAMPLING DATA . . . . . 3-1
3.1 DATA SOURCE . . . . . 3-1
3.1.1 Wastestream Data . . . . . 3-1
3.1.2 Background Data . . . . . 3-4
3.2 DATA PRESENTATION . . . . . 3-4

4.0 DATA OVERVIEW . . . . . 4-1
4.1 DATA COMPARISON . . . . . 4-1
4.2.1 Chemical . . . . . 4-4
4.2.2 Radiological . . . . . 4-4
4.2 STREAM DEPOSITION RATES . . . . . 4-4

5.0 DESIGNATION . . . . . 5-1
5.1 DANGEROUS WASTE LISTS . . . . . 5-1
5.1.1 Discarded Chemical Products . . . . . 5-1
5.1.2 Dangerous Waste Sources . . . . . 5-3
5.2 LISTED WASTE DATA CONSIDERATIONS . . . . . 5-3
5.2.1 Process Evaluation . . . . . 5-3
5.2.2 Sampling Data . . . . . 5-4
5.3 PROPOSED LISTED WASTE DESIGNATION . . . . . 5-5
5.3.1 Discarded Chemical Products . . . . . 5-5
5.3.2 Dangerous Waste Sources . . . . . 5-11

CONTENTS (continued)

5.4 DANGEROUS WASTE CRITERIA . . . . . 5-12
5.4.1 Toxic Dangerous Wastes . . . . . 5-12
5.4.2 Persistent Dangerous Wastes . . . . . 5-13
5.4.3 Carcinogenic Dangerous Wastes . . . . . 5-14
5.5 DANGEROUS WASTE CHARACTERISTICS . . . . . 5-14
5.5.1 Ignitability . . . . . 5-14
5.5.2 Corrosivity . . . . . 5-15
5.5.3 Reactivity . . . . . 5-15
5.5.4 Extraction Procedure Toxicity . . . . . 5-15
5.6 PROPOSED DESIGNATION . . . . . 5-15

6.0 ACTION PLAN . . . . . 6-1
6.1 FUTURE SAMPLING . . . . . 6-1
6.2 TECHNICAL ISSUES . . . . . 6-1

7.0 REFERENCES . . . . . 7-1

APPENDIXES:

A Process Chemicals, Chemical Stocks, Maintenance Chemicals and Janitorial Supplies and Aerosols . . . . . A-1

B Sample Data . . . . . B-1

## LIST OF FIGURES

1-1 Characterization Strategy . . . . . 1-3

1-2 Location of the 222-S Control Laboratory at the Hanford Site . . 1-5

1-3 The 222-S Laboratory and Associated Facilities . . . . . 1-6

2-1 222-S Laboratory Wastewater System . . . . . 2-2

2-2 222-S Laboratory Coolant and Condensate Flow Diagram . . . . . 2-3

5-1 Illustration of the Designation Procedure . . . . . 5-2

## LIST OF TABLES

1-1 Stream-Specific Report Reference List . . . . . 1-2

3-1 Procedures for 222-S Laboratory Wastewater Samples . . . . . 3-2

3-2 Contract Laboratory Analytical Information Sheet . . . . . 3-5

3-3 Chemical Data Summary . . . . . 3-8

4-1 Comparison of Sampling Data and Process Data . . . . . 4-2

4-2 Evaluation of 222-S Laboratory Wastewater . . . . . 4-3

4-3 Comparison of Detected Sample Data with Detected Background Data . . . . . 4-5

4-4 Comparison Ratios that Exceed 1.0 . . . . . 4-6

4-5 Deposition Rate for 222-S Laboratory Wastewater . . . . . 4-7

5-1 Inorganic Chemistry for the 222-S Laboratory Wastewater . . . . . 5-6

5-2 Dangerous Waste Designation Report for 222-S Laboratory Wastewater . . . . . 5-8

This page intentionally left blank.

9111395120

# 222-S LABORATORY WASTEWATER STREAM-SPECIFIC REPORT

## 1.0 INTRODUCTION

### 1.1 BACKGROUND

In response to the *Hanford Federal Facility Agreement and Consent Order* (Tri-Party Agreement) (Ecology et al. 1989), comments were received from the public regarding reduction of the discharge of liquid effluents into the soil column. As a result, the U.S. Department of Energy (DOE), with the concurrence of the Washington State Department of Ecology (Ecology) and the U.S. Environmental Protection Agency (EPA), committed to assess the contaminant migration potential of liquid discharges at the Hanford Site (Lawrence 1989).

This assessment is described in the *Liquid Effluent Study Project Plan* (WHC 1990a), a portion of which characterizes 33 liquid effluent streams. This characterization consists of integrating the following elements, pursuant to the Washington Administrative Code (WAC) 173-303 (Ecology 1989): process data, sampling data, and dangerous waste regulations.

The results of the characterization study are documented in 33 separate reports, one report per wastestream. The complete list of stream-specific reports appears in Table 1-1.

### 1.2 APPROACH

This report characterizes the 222-S Control Laboratory, 222-SA Analytical Chemical Standards Laboratory, and 291-S Exhaust Fan Control House and Stack wastestreams in sufficient detail so that a dangerous waste designation, in accordance with WAC 173-303-070, can be proposed and so that an assessment of the relative effluent priorities, with regard to the need for treatment and alternative disposal practices can be made.

The characterization strategy (shown in Figure 1-1) is implemented by means of the following steps.

1. Describe both process and sampling data (Sections 2.0 and 3.0, respectively).

2. Integrate the data (Section 4.0).

Table 1-1. Stream-Specific Report Reference List.

| | |
|---|---|
| WHC-EP-0342 Addendum 1 | 300 Area Process Wastewater |
| WHC-EP-0342 Addendum 2 | PUREX Plant Chemical Sewer |
| WHC-EP-0342 Addendum 3 | N Reactor Effluent |
| WHC-EP-0342 Addendum 4 | 163-N Demineralizer Wastewater |
| WHC-EP-0342 Addendum 5 | PUREX Plant Steam Condensate |
| WHC-EP-0342 Addendum 6 | B Plant Chemical Sewer |
| WHC-EP-0342 Addendum 7 | $UO_3$/U Plant Wastewater |
| WHC-EP-0342 Addendum 8 | Plutonium Finishing Plant Wastewater |
| WHC-EP-0342 Addendum 9 | REDOX Complex Wastewater |
| WHC-EP-0342 Addendum 10 | T Plant Wastewater |
| WHC-EP-0342 Addendum 11 | 2724-W Laundry Wastewater |
| WHC-EP-0342 Addendum 12 | PUREX Plant Process Condensate |
| WHC-EP-0342 Addendum 13 | 222-S Laboratory Wastewater |
| WHC-EP-0342 Addendum 14 | PUREX Plant Ammonia Scrubber Condensate |
| WHC-EP-0342 Addendum 15 | 242-A Evaporator Process Condensate |
| WHC-EP-0342 Addendum 16 | B Plant Steam Condensate |
| WHC-EP-0342 Addendum 17 | B Plant Process Condensate |
| WHC-EP-0342 Addendum 18 | 2101-M Laboratory Wastewater |
| WHC-EP-0342 Addendum 19 | $UO_3$ Plant Process Condensate |
| WHC-EP-0342 Addendum 20 | PUREX Plant Cooling Water |
| WHC-EP-0342 Addendum 21 | 242-A Evaporator Cooling Water |
| WHC-EP-0342 Addendum 22 | B Plant Cooling Water |
| WHC-EP-0342 Addendum 23 | 241-A Tank Farm Cooling Water |
| WHC-EP-0342 Addendum 24 | 284-E Powerplant Cooling Water |
| WHC-EP-0342 Addendum 25 | 244-AR Vault Cooling Water |
| WHC-EP-0342 Addendum 26 | 242-A Evaporator Steam Condensate |
| WHC-EP-0342 Addendum 27 | 284-W Powerplant Wastewater |
| WHC-EP-0342 Addendum 28 | 400 Area Secondary Cooling Water |
| WHC-EP-0342 Addendum 29 | 242-S Evaporator Steam Condensate |
| WHC-EP-0342 Addendum 30 | 241-AY/AZ Tank Farms Steam Condensate |
| WHC-EP-0342 Addendum 31 | 209-E Laboratory Reflector Water |
| WHC-EP-0342 Addendum 32 | T Plant Laboratory Wastewater |
| WHC-EP-0342 Addendum 33 | 183-D Filter Backwash Wastewater |

9 1 1 1 3 9 5 1 2 5 2

Figure 1-1. Characterization Strategy.

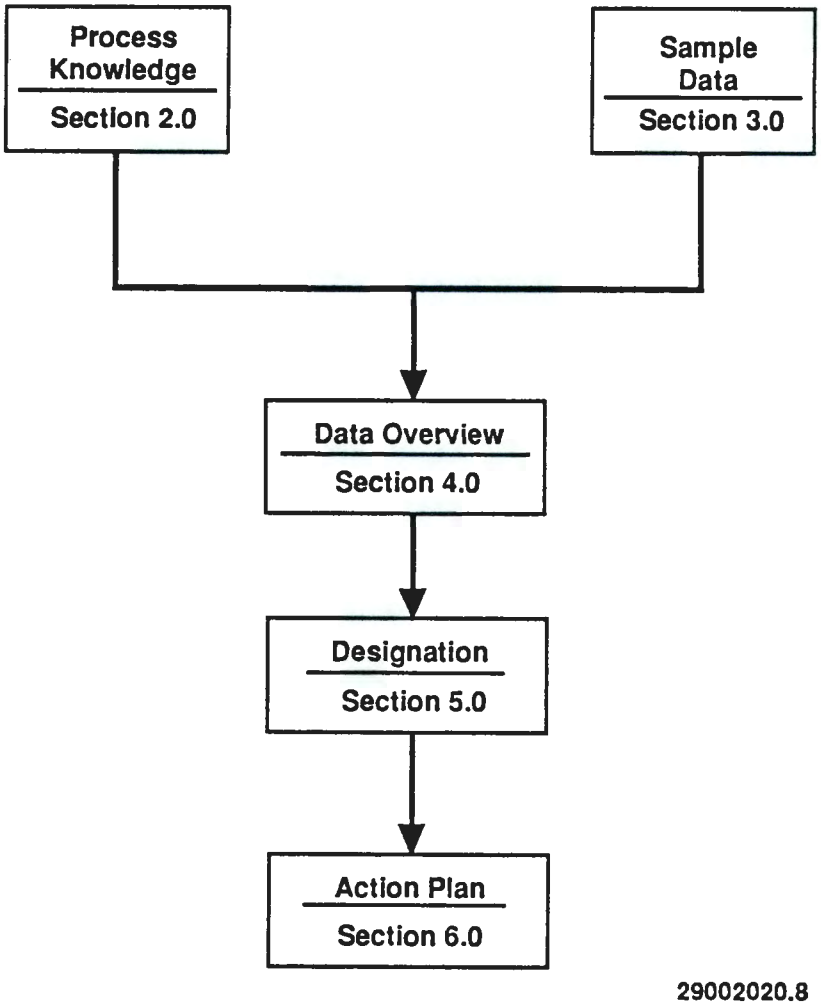

3. Propose a designation (Section 5.0).

4. Design an action plan, if needed, to obtain additional characterization data (Section 6.0).

## 1.3 SCOPE

Although the primary focus of this report is the characterization (both process knowledge and sampling data) of the 222-S Laboratory wastewater, two additional wastestreams are evaluated (the 222-SA Laboratory wastewater and the 291-S Facility cooling water). The latter two wastestreams, however, are characterized based on process knowledge only.

This report does not address any other wastestreams of these facilities, such as solid, gaseous, radioactive or hazardous liquid or sanitary waste. Figure 1-2 shows the location of the 222-S Laboratory at the Hanford Site. Figure 1-3 shows the relationship between the 222-S Laboratory and associated facilities.

Historical changes, process campaign changes, and sampling data are considered only if relevant to the characterization of the wastestream as it presently exists. Both process and sampling data will be judged adequate when the normal process system fluctuations have been described in sufficient detail to predict present operation. Future configuration/process modifications are addressed only if they will significantly alter the present effluent.

The sampling data, included as Appendix B-1, are from 4 samples taken from the 207-SL Retention Basin between October 1989 through March 1990. This data will be used for designation, and maximum contamination level (MCL) and derived concentration guide (DCG) comparisons. All sampling data, including sampling data obtained before October 1989, appears in Appendix B-2. The sampling data does not include the 222-SA Laboratory wastewater or 291-S Facility cooling water.

Figure 1-2. Location of the 222-S Control Laboratory at the Hanford Site.

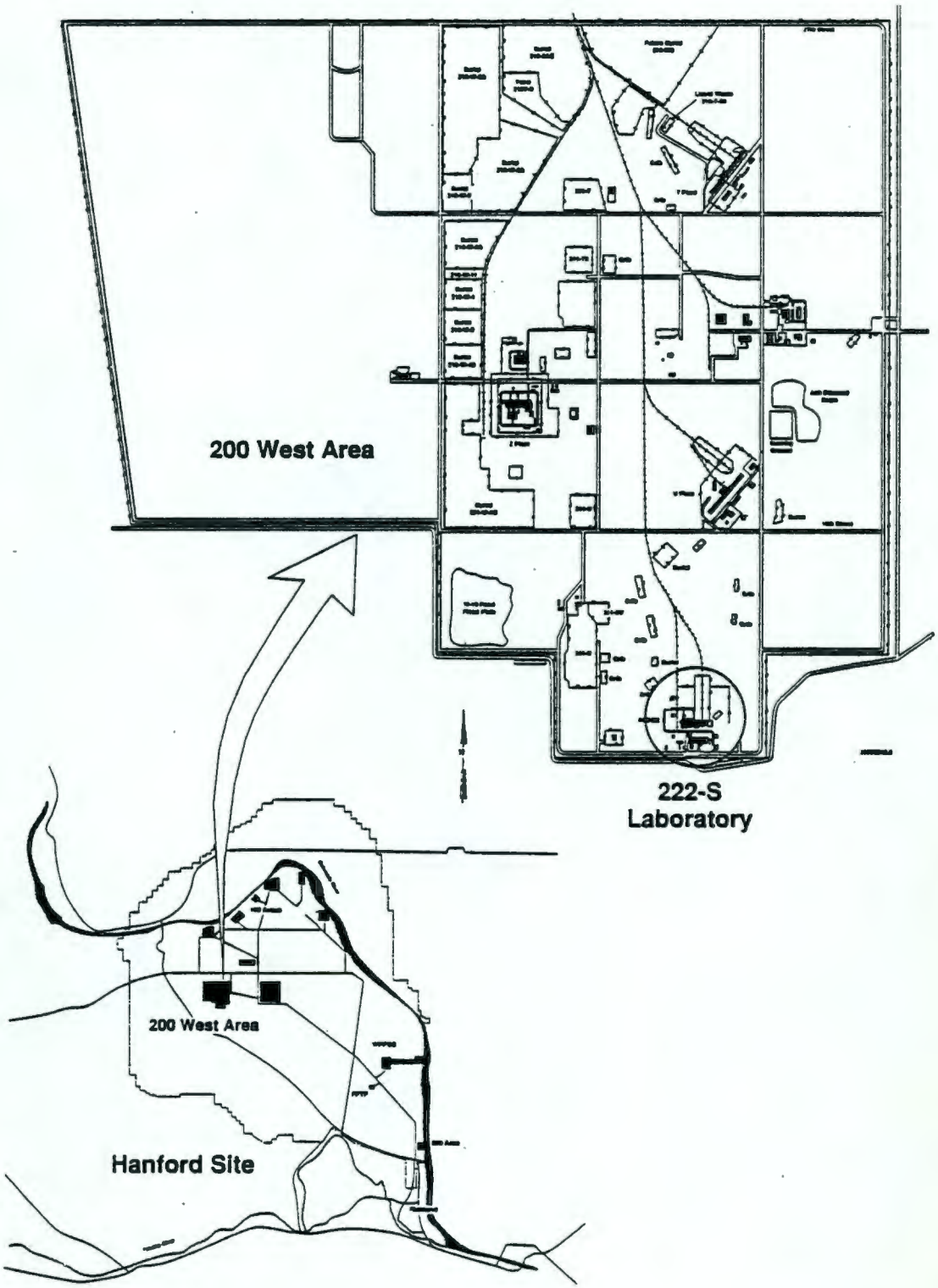

Figure 1-3. The 222-S Laboratory and Associated Facilities.

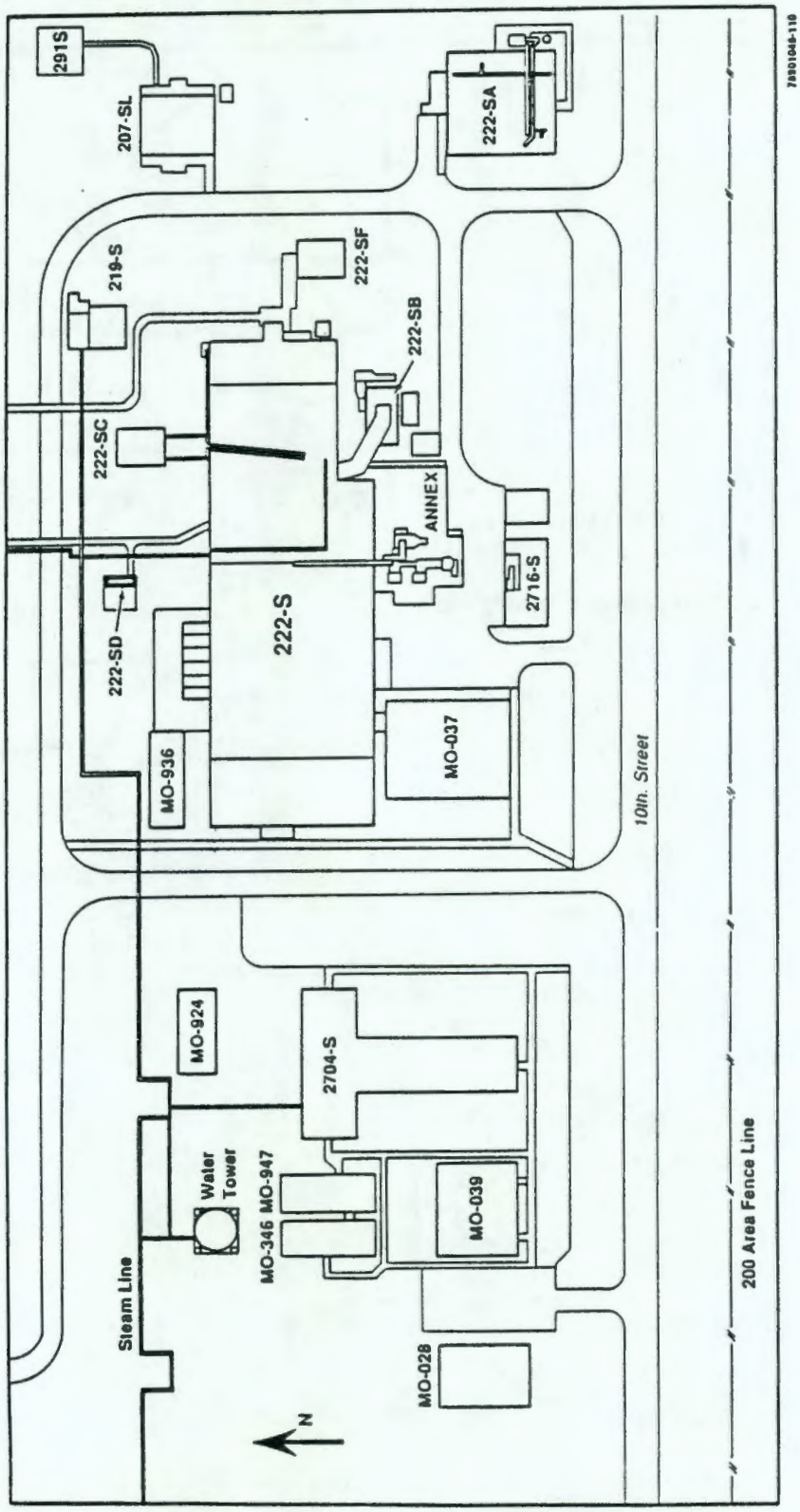

# 2.0 PROCESS DATA

This section presents a qualitative and quantitative process knowledge-based characterization of the chemical and radiological constituents of the 222-S Laboratory, 222-SA Laboratory, and 291-S Facility wastestreams. These process data are discussed in terms of the following factors:

1. Location and physical layout of the process facility
2. A general description of the present, past, and future activities of the process
3. The identity of the wastestream contributors
4. The identity and concentration of the constituents of each contributor.

## 2.1 PHYSICAL LAYOUT

The 222-S Laboratory is located in the 200 West Area of the Hanford Site. Nonradioactive wastewater from this building and from the nearby 219-S Waste Treatment Building flows to two concrete retention compartments in the 207-SL Retention Basin, where it is accumulated and sampled before discharge. (Sanitary wastes are not part of this stream.) Wastewater meeting radioactive and chemical discharge specifications is routed from the 207-SL Basin to the 216-S-26 Crib, which is located southeast of the 222-S Laboratory, outside the 200 West exclusion area. Figure 2-1 shows the layout of the wastewater system. The 222-SA Laboratory and the 291-S Facility also contribute water to the 216-S-26 Crib. These streams, however, are not accumulated in the 207-SL Basin. Figure 2-2 shows a flow diagram of major sources of wastewater generated within the 222-S Laboratory.

### 2.1.1 222-S Laboratory

The 222-S Laboratory is a two-story building, 322 ft long and 107 ft wide. The first floor contains three general areas. The west area contains the lunchroom, offices, and locker rooms, which are maintained free of radioactivity and toxic chemicals. The central portion contains laboratories and service areas for work with low- to intermediate-level radioactivity or toxic materials, although an occasional high-level sample may be located in this area. The east area, commonly referred to as the Multicurie Section, contains laboratories, hot cells, and service areas for working with intermediate- to high-level radioactive samples. The central and east areas contain laboratory benches and hoods that are supplied with services such as electrical outlets, tap water, distilled water, propane, compressed air, and process vacuum.

Figure 2-1. 222-S Laboratory Wastewater System.

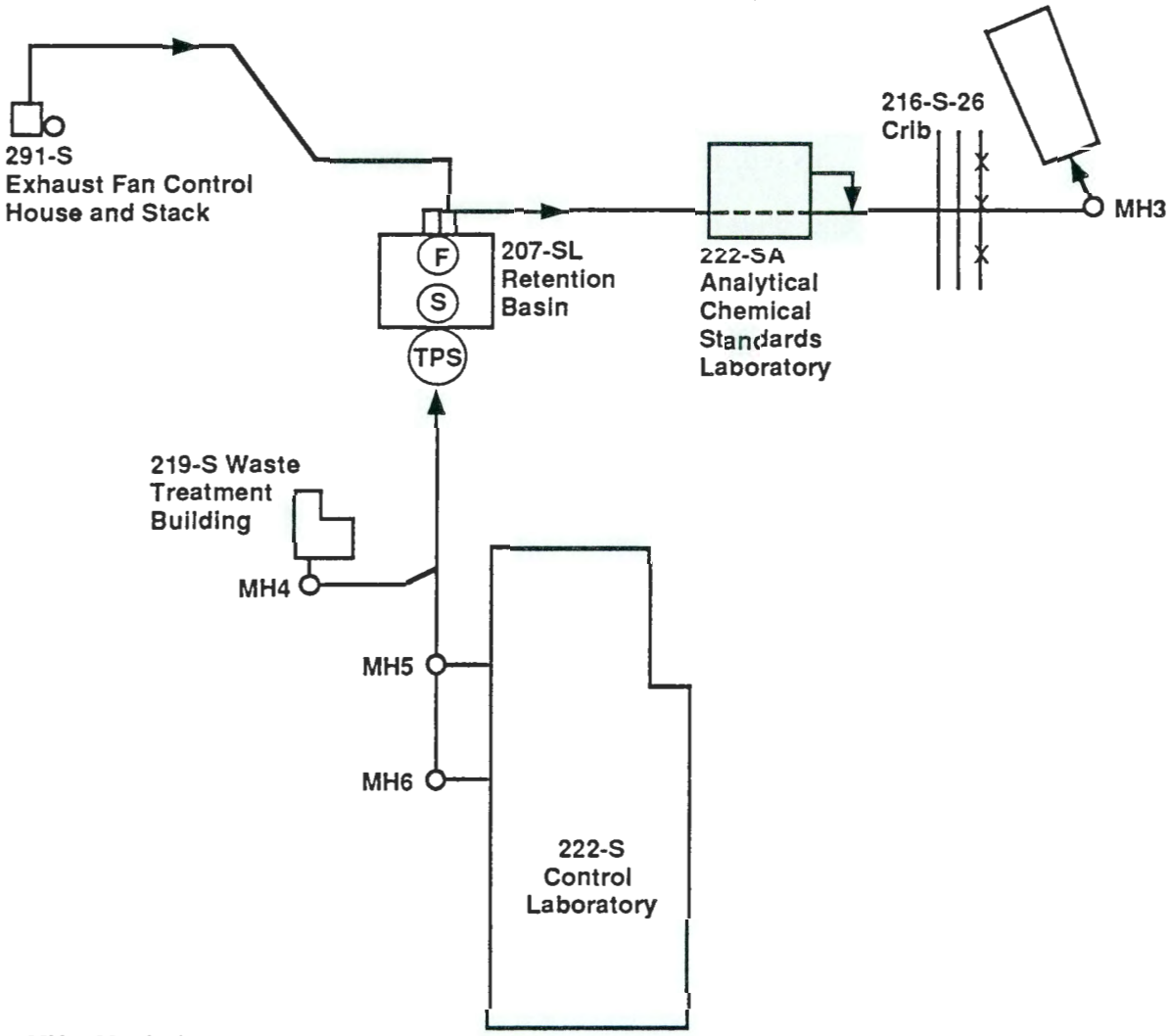


MH = Manhole

TPS = Time proportional sampler (Record)

(S) = Sampling location for SSR samples (grab samples)

(F) = Flow measurement location

299003038.43

Figure 2-2. 222-S Laboratory Coolant and Condensate Flow Diagram.

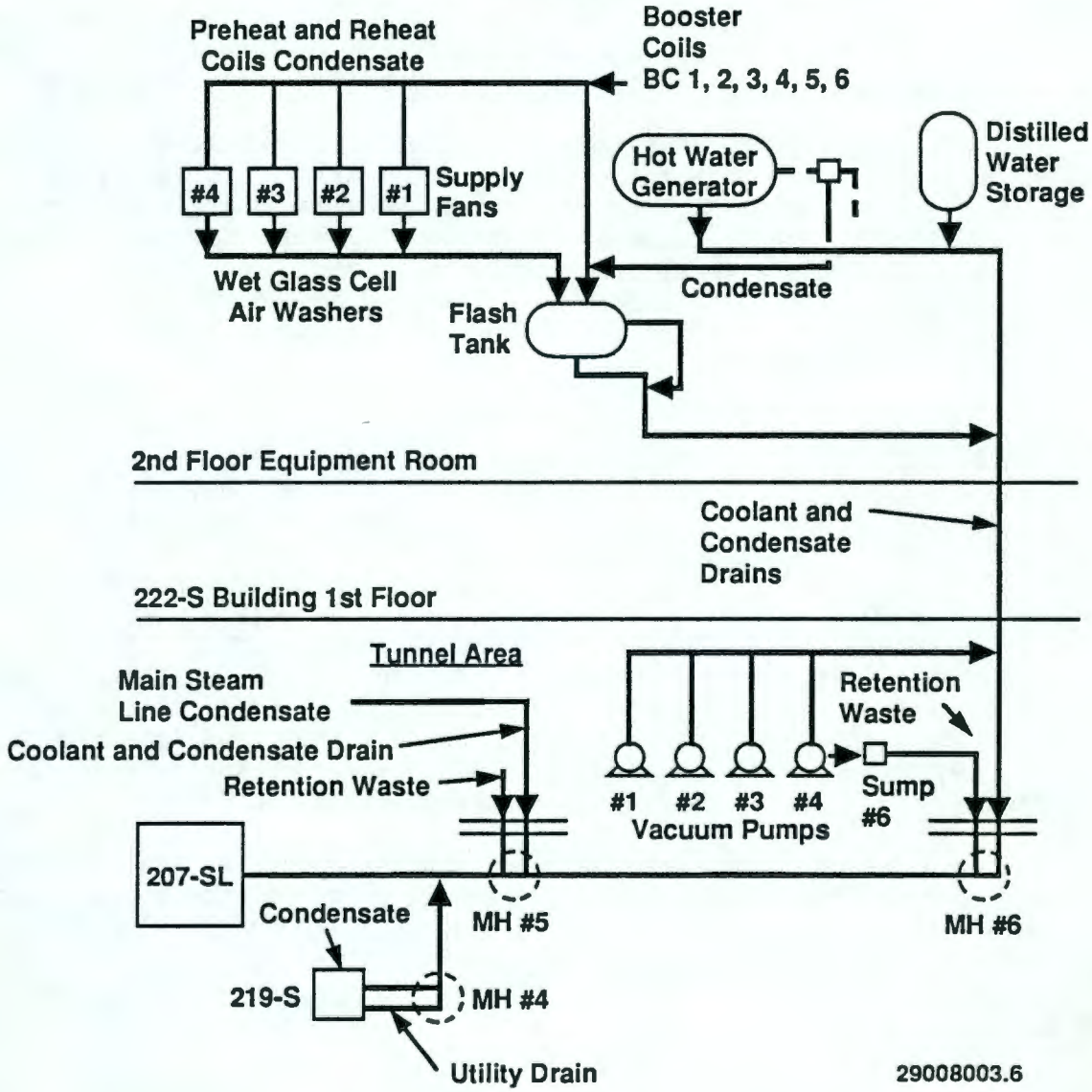

The supply water for 222-S Laboratory consists of raw and sanitary water and steam. The raw water is used in the fire sprinkler system and contributes less than 1% of the wastestream flow. Sanitary water is used as the primary supply water to the laboratory and contributes 85% to the wastestream flow. Steam condensate contributes the remaining 15% of the wastestream flow.

Radioactive effluents containing hazardous constituents are segregated from nonradioactive and nonhazardous effluents. All first floor laboratory sinks, hood drains, drinking water fountains, service sinks, bathroom sinks, distilled water supplies, equipment cooling water, and steam condensate from the low- to intermediate-level radioactive areas empty into the 207-SL Retention Basin. The laboratory sinks and hood drain from the Multicurie Section areas of the first floor also empty into the 207-SL Retention Basin.

The second floor contains the ventilation supply fans, supply and exhaust ductwork, the ventilation system operation and control room, a glass shop, and storage areas. This area is a radioactive surface contamination zone. The sinks and drains from the glass blowing shop on the second floor empty into the 207-SL Retention Basin. The second floor distilled water overflow and drain, the backwash and drain from the Millipore* deionized water unit, a floor drain near the unit, and the flash tank overflow and drain lines all empty into the 207-SL Retention Basin. Lines into the flash tank include cooling water from the supply fans, condensate from booster coils, and condensate from the reheat and preheat coils on supply fans (see Figure 2-2). Overflow and drain lines from the overhead nitric acid storage tank empty into the main nitric acid storage tank outside of the building.

The basement contains service piping, vacuum pumps, a counting room, an instrument maintenance shop, and a scanning electron microscope laboratory. This area is also a radioactive surface contamination zone. All effluent generated in the basement of the 222-S Laboratory is analyzed for radioactive contamination and, if below release criteria, is discharged to the 207-SL Retention Basin.

### 2.1.2 219-S Waste Treatment Building

The 219-S Building collects radioactive and radioactive mixed liquid waste generated by 222-S Laboratory operations. This facility consists of two below-grade vaults, called cells A and B; a 27-ft by 25-ft below-grade concrete vault, containing three stainless steel tanks; a 22-ft by 13-ft transit building; the pipe trench and operating gallery; and an attached concrete-walled sample gallery. Overflow and drain lines from the caustic tank (used for neutralizing radioactive wastes) are routed to the hot waste

---

*Millipore is a trademark of the Millipore Corporation, Bedford, Massachussetts.

### 2.1.3 291-S Exhaust Fan Control House and Stack

Cooling water (raw) from the 291-S Facility emergency exhaust fan is routed to the 207-SL Retention Basin discharge box. Because this cooling water is added directly to the 207-SL Basin discharge box, it bypasses the sampling unit at the 207-SL Basin inlet and, therefore, is not routinely sampled and analyzed before going to the 216-S-26 Crib. The cooling water flowrate is approximately 6-8 gal/min when the emergency fan is activated. The fan and cooling water operate approximately 30 h/yr.

### 2.1.4 222-SA Analytical Chemical Standards Laboratory

The 222-SA Laboratory is a five-wide-trailer located southeast of the 222-S Control Laboratory. One section of the 222-SA Laboratory is used for preparing nonradioactive standards for the Plutonium-Uranium Extraction (PUREX) Plant Analytical Laboratory, the 234-5 Analytical Laboratory, and the 222-S Laboratory. The other section of the 222-SA Laboratory is used for cold process development work. Nonhazardous effluents (see Section 2.2.1 for a more detailed discussion) from the 222-SA Laboratory sinks, fume hoods, safety eye wash, and glass washer are discharged to the 216-S-26 Crib. This discharge occurs downstream of the 207-SL Retention Basin; therefore, it is not routinely sampled and analyzed. Because the 222-SA Laboratory is a "cold" standards laboratory, no monitoring for radioactive contaminants is required.

### 2.1.5 207-SL Retention Basin

The 222-S Laboratory wastewater, which is normally free of radioactive and hazardous chemical contamination, is routed to the 207-SL Retention Basin. The 207-SL Retention Basin acts as a temporary holding facility for potentially radioactive or hazardous liquid effluents before they are discharged to the 216-S-26 Crib. The 207-SL Facility is a below-grade concrete structure located directly east of the 222-S Building. Two 25,000-gal-capacity compartments allow batch collection, sampling, and discharge of the waste. The only monitoring equipment on the wastestream is a time-proportional sampler at the inlet to the 207-SL Basin used to automatically collect the record sample. The flow is normally measured using the totalizer and integrator on the proportional sampler. When the integrator or sampler is not functioning, the record sample is collected as a grab sample and the flow is measured by a dip tube in the basin that measure the number of inches of wastewater in the basin. The number of inches of wastewater is converted to gallons of wastewater. The wastewater is retained in the compartment until chemical and radionuclide analyses are completed. If the wastewater meets discharge specifications for surface discharge, it is routed to the 216-S-26 Crib, which is located southeast of the 222-S Laboratory. Wastewater generated during emergency or upset conditions within the 222-S Laboratory that exceeds radioactivity limits or Comprehensive Environmental Response Compensation and Liability Act (CERCLA) reportable quantities is routed to the 219-S Waste Treatment Building for disposal to

underground storage tanks. Effluent not meeting pH requirements is adjusted to a pH between 2.0 and 12.5 and discharged to the 216-S-26 Crib. Chemical adjustment of the effluent was not performed in the October 1989 to March 1990 sampling period.

### 2.1.6 216-S-26 Crib

The 216-S-26 Crib receives all effluents (meeting discharge specifications) that are collected in the 207-SL Retention Basin, the effluent from the 291-S Facility, and the nonhazardous effluent from the 222-SA Laboratory. The crib was designed to handle laboratory wastewater at 75,000 gal/d or 25,000 gal/8-h shift. Dimensions of the 216-S-26 Crib are approximately 420 ft by 10 ft.

## 2.2 CONTRIBUTORS

The following subsections describe known and potential contributors of wastewater and chemicals to the 222-S Laboratory wastewater system. Discharges to this system are limited to nonradioactive, nonhazardous wastewaters. Five types of contributors are described:

1. Process chemicals
2. Laboratory chemical stocks
3. Maintenance chemicals
4. Janitorial supplies and aerosols
5. Radionuclides.

### 2.2.1 Process Chemicals

Process chemicals are defined as pure chemicals or commercial products that are used on a routine basis. These substances are either known to be discharged via the 222-S Laboratory wastewater system or they are located so that a discharge is possible.

In the 222-S Laboratory, process chemicals include liquid laboratory cleaner, which is used in ultrasonic cleaners to clean glassware. Ultrasonic cleaning solution is discharged to the wastewater system. This cleaner is purchased in 5-gal-capacity bottles and mixed for use at a maximum concentration of 7.5 mL/gal (2%). About 10 to 15 gal are purchased each year for use in the 222-S Laboratory. The Material Safety Data Sheet (MSDS) for this product shows that it contains 0.7% ammonia as a hazardous ingredient. The MSDS also states that "Micro" is biodegradable and of low aquatic toxicity. An $LD_{50}$ (species not given) of >10,000 mg/L is reported. The MSDS states that the product is not toxic.

ingredient. The MSDS also states that "Micro" is biodegradable and of low aquatic toxicity. An $LD_{50}$ (species not given) of >10,000 mg/L is reported. The MSDS states that the product is not toxic.

Other commercial products, such as Dearcide* 730 and Dearcide 702, which are biocides, and Dearborn Poly Mate* 4690, a corrosion inhibitor, are used in the 222-S Laboratory's ventilation air supply water wash units. Additions of these chemicals are made only during months when ventilation system cooling water is in use (typically summer). Dearcide 730 consists of white tablets of 99% trichloro-s-triazinetrione. Additions are made weekly (if needed) for each fan in operation. A second tablet is added to the system whenever the existing tablet is more than half dissolved. Dearcide 702 is an aqueous solution of small quantities of several chemicals. (See Table A-1, Appendix A.) Four ounces of this liquid are added to the system weekly for each operating fan. Poly Mate 4690 is pumped into the system automatically from a drum. This product has been discontinued by the manufacturer. Composition data are not available at this time for Poly Mate 4690, although they have been requested by the Hanford Environmental Health Foundation.

The 222-S Laboratory also has a nitric acid tank. A pan drain for this tank was formerly routed to the retention basins. This drain has been rerouted, however, to an outdoor nitric acid tank that is not connected to the wastewater disposal system.

The only routine chemicals discharged from the 222-SA Laboratory are soaps used in cleaning used glassware. Used glassware in this laboratory is triple rinsed into accumulation containers which are managed and disposed of in labpacks according to WAC 173-303 requirements. Following triple rinsing, glassware is washed in ultrasonic cleaners. This ultrasonic cleaning solution is discharged to the 216-S-26 Crib. A number of commercial cleaners are used, including Micro Liquid Laboratory Cleaner, Markson All Purpose Detergent, Markson Ammoniated Detergent, Markson Sonic Phosphoric Detergent, and ESPI** Decontam. New glassware is washed in a commercial dishwasher using no soap. The Micro Liquid Laboratory Cleaner is the same nontoxic solution as that used in the 222-S Laboratory. The MSDS for the Markson products were not immediately available. The MSDS for the ESPI Decontam lists no hazardous ingredients, indicates that the product is nontoxic, and shows that it has a pH of 12 at full concentration.

Ion exchange columns in the 222-S and 222-SA Laboratories are backwashed with water only. New columns, however, are filled with a solution containing 20% glycerine and 3% formalin. (Formalin is a solution generally made up of formaldehyde, water, and methanol.) When the new columns are installed they are backwashed with water and the backwash goes to the 207-SL Basin or the 216-S-26 Crib.

---

*Trademarks of W. R. Grace and Company, New York, New York.

**ESPI is a trademark of Electronic Space Products, Inc., Los Angles, California.

Steam condensate discharged from the various facilities may contain Dearborn Super Filmeen* 14 which is used as a steam treatment at the power plants. Super Filmeen 14 is also a product listed as discontinued by its manufacturer. The MSDS lists no hazardous ingredients for this product. Concentrations of this product are expected to be very small because the 222-S Laboratory is at the end of the distribution system.

Appendix A, Table A-1, contains a list of the process chemicals known to enter the wastewater system.

### 2.2.2 Laboratory Chemical Stocks

Both the 222-S and 222-SA Laboratories contain numerous containers of small quantities of chemicals used in research and routine analytical work. Tables A-2, A-3, and A-4 of Appendix A contain lists of these chemicals. The bases for these tables are the December 5, 1989, process control laboratories (PCL) chemical inventory and the 222-SA Laboratory chemical inventory.

Dangerous chemicals are not discharged to the wastewater system. They are packaged for appropriate disposal according to standard operating procedures. There is a potential for accidental release because many of the chemicals are located in areas that also have drains to the wastewater system; however, there have been no spills of laboratory chemical stocks to the wastewater system. For example, until March 1990, the use of dispensing bottles in the 222-S Laboratory resulted in the occasional discharge of small droplets (<mL quantities) of some solutions to laboratory drains. These discharges occurred when solutions were removed from the dispensing bottle. Small droplets clinging to the discharge tubes were expelled, along with some air, when the plunger was depressed to raise the level of the solution to the outlet. The dispensing bottles were stored so that the discharge tubes were positioned over laboratory sinks. In March 1990, however, this practice was discontinued, and the discharges were collected and disposed of in accordance with WAC 173-303-200.

Chemicals contained in these dispensing bottles included nitric acid (7M), hydrochloric acid (7M), sodium carbonate (0.25M), silver nitrate (0.25M), Carbo-sorb** (98% 2-methoxyethylamine), ammonium chloride/ammonium hydroxide pH 10 solution, acetic acid, ammonium acetate buffer pH 4.5, and nitric acid (0.8M).

---

*Filmeen is a trademark of W. R. Grace and Company, Inc., New York, New York.

**Carbo-sorb is a trademark of Packard Instrument Company, Inc., Donners Grove, Illinois.

### 2.2.3 Maintenance Chemicals

The 222-S Laboratory maintenance area contains a number of commercial products (see Appendix A, Table A-5). Because manufacturers are required to report on MSDS only some of the ingredients considered hazardous by EPA, not all chemical components of these products are known.

### 2.2.4 Janitorial Supplies and Aerosols

The 222-S and 222-SA Laboratories use a number of janitorial supplies and aerosols in routine operations (see Appendix A, Table A-6). Alternate products may be used. Some of these products are duplicates of those listed as maintenance chemicals. The majority of the janitorial products are discharged through proper use to the sanitary sewer.

### 2.2.5 Radionuclides

Discharges to the 222-S Laboratory wastewater system are normally limited to nonradioactive sources. Consequently, little radioactive contamination is found in this stream. Wastewater exceeding the discharge specifications established in WHC-CM-7-5, *Environmental Compliance Manual*, Part F (WHC 1989b), are routed to the 219-S Waste Treatment Building. The total annual activity of alpha- and beta-emitting radionuclides discharged in 1988 from the 222-S Laboratory to the 216-S-26 Crib were $6.79 \times 10^{-5}$ and $<1.27 \times 10^{-4}$ curies, respectively (Coony and Thomas 1989). In 1987, the total alpha and beta discharges were $<3.72 \times 10^{-5}$ and $<5.23 \times 10^{-4}$ curies, respectively (Coony et al. 1988).

## 2.3 PROCESS DESCRIPTION

The 222-S Laboratory was built during 1950 and 1951 to provide the analytical support necessary for process control in the Reduction-Oxidation (REDOX) Plant. The REDOX process is no longer operating and the nature of support responsibilities at the 222-S Laboratory has changed according to various missions over the years.

### 2.3.1 Present Activities

Facility personnel currently use the 4 hot cells and 150 open-face hoods at the 222-S Laboratory in support of several programs and plant operations (including PUREX Plant technology), waste fractionization and encapsulation, waste concentration, grout processing, and other activities associated with tank farms operations and single-shell tank waste characterization. Laboratory operations generate an active wastewater stream, averaging 6,800 gal (2,100-8,400) per 8-h shift, that is disposed of to the 216-S-26 Crib.

The 222-SA Laboratory is a "cold" (nonradioactive) laboratory that supplies standards for use in other laboratories, such as in the PUREX plant. The estimated volume of wastewater generated by the 222-S Laboratory is 1,000 gal/d. The wastewater discharge to the 216-S-26 Crib occurs downstream from the 207-SL Retention Basin and is not sampled or analyzed.

### 2.3.2 Past Activities

The 222-S Laboratory was originally built to support operation of the REDOX process and was used to support various plant operations. The process activities have changed little in the past five years. The 216-S-26 Crib was placed into service in October 1984. Before 1984, the wastewater was discharged to the 216-S-19 Pond or the 216-S-20 Crib.

### 2.3.3 Future Activities

The 222-S Laboratory has several process changes planned that will affect the 222-S Laboratory wastewater stream. The major change is the installation of recirculating vacuum pumps in the tunnel area. A 50% reduction in wastewater flow is expected as a result of installing the recirculating vacuum pumps. The wastewater will be collected, sampled and discharged once per day instead of once per shift.

The second process change will be the addition of holding tanks to accumulate wastewater that does not meet chemical or radioactivity discharge criteria. The 222-S wastewater that meets discharge criteria will be routed to the 200 Area Treated Effluent Disposal System (TEDS). The wastewater from the 222-SA Laboratory and the 291-S Facility will be routed to the 207-SL Retention Basin as part of this upgrade. An Engineering Study has been completed and funding is being sought for completing the project during FY 1993. Hanford Federal Facility Agreement and Consent Order (Tri-Party Agreement) Milestone M-17-08, complete 200 Area treated effluent system, is scheduled for completion in June 1995.

The 222-S Laboratory is planning to add a treatment facility to process incoming steam. This process will add the commercial product Dearborn Steamate 2004* to the steam. Additional treatment of the steam is required because the 222-S Laboratory is at the end of the steam distribution system; hence, the additives that are made to the steam at the power plant do not carry to the 222-S Laboratory in adequate concentrations. Steamate 2004, a "return line treatment," is a liquid containing <8% diethylaminoethanol and <8% morpholine.

The time-proportional sampler used to collect the record sample will be replaced by a flow-proportional sampler during fiscal year (FY) 1991.

---

*Steamate 2004 is a trademark of W. R. Grace and Company, Inc., New York, New York.

## 2.4 PROCESS DATA

Chemicals that are known to be discharged via the 222-S Laboratory wastewater system are listed in Appendix A, Table A-1. Tables A-2 through A-6 of Appendix A contain lists of chemical stocks, maintenance supplies, as well as janitorial supplies and aerosols that could potentially be discharged to the wastewater system.

Estimated concentrations of chemicals known to be discharged to the 222-S Laboratory wastewater system are discussed below. The chemicals discharged via the 222-S Laboratory wastewater system may vary seasonally and according to laboratory activities. Additions of biocides to the ventilation system air supply water wash units are made only in the summer months. Laboratory chemical stocks, maintenance chemicals, and janitorial supplies and aerosols are not listed because either discharge is not likely or, in the case of chemicals stored in syringe-type dispensing bottles, the amount discharged was small. Chemicals stored in this manner included nitric acid (7M), hydrochloric acid (7M), sodium carbonate, "Carbo-sorb," ammonium chloride/ammonium hydroxide (pH 10), acetic acid, ammonium acetate buffer (pH 4.5), and nitric acid (0.8M).

The only routine discharge to the wastewater system for which annual quantities have been estimated is the discharge of "Micro" cleaner from the 222-S Laboratory. This cleaner contains 0.7% ammonia. Assuming a density of 1.0, the discharge of 15 gal (0.04 gal/d) of this material, when mixed in a daily flow of 18,000 gal, would result in a discharge concentration of 0.02 ppm of ammonia. Concentrations of ammonia at the 216-S-26 Crib are likely to be higher, because of the additional discharges, which equal the amount discharged by the 222-S Laboratory, made by the 222-SA Laboratory.

The 222-S Laboratory wastewater system consists of primarily nonradioactive streams. Consequently, no routine or quantifiable discharges of radionuclides are expected. Extremely low levels of radioactivity may be released to the 207-SL as a result of washing and rinsing laboratory glassware used to prepare effluent samples for analysis. The contents of the 207-SL Retention Basin are sampled and analyzed before discharge to verify that radioactive releases to the soil column do not exceed discharge limits established in WHC-CM-7-5 (WHC 1989b).

The flow (L/mo) of wastewater from the 222-S Laboratory to the 216-S-26 Crib during the sampling period, as measured using the dip tube method described in Section 2.1.5, is shown below:

| Month | Flow (L/mo) |
|---|---|
| October 89 | 3.10E+06 |
| November 89 | 3.20E+06 |
| December 89 | 2.20E+06 |
| January 90 | 1.87E+06 |
| February 90 | 1.85E+06 |
| March 90 | 1.82E+06 |

An additional 1,000 gal/d is the estimated discharge from the 222-SA Laboratory (Engineering Science, Inc. 1989).

# 3.0 SAMPLING DATA

This section provides an evaluation of the sampling data pertaining to the 222-S Laboratory wastewater. The sampling data does not include wastewaters from the 291-S Stack Fan House or from the 222-SA Standards Laboratory. These data are divided into two categories, wastestream data and background data, each of which is further subdivided into chemical data and radiological data. The discussion identifies the source of the samplings (Section 3.1) and a discussion of the data (Section 3.2).

## 3.1 DATA SOURCE

The data sources for this analysis are wastestream data (chemical and radiological) and background data (chemical and radionuclide content of the 200 West Area raw and sanitary water). All samples were collected as grab samples from the 207-SL Basin, even though this sample point did not sample the 291-S Facility or 222-SA Laboratory wastestream contributors. This sample point was chosen because it represented the major flow contributor to the 216-S-26 Crib. The 291-S cooling water was not sampled because it is used to cool the ventilation exhaust fan oil bath and is not expected to contribute radioactive or chemical constituents. It is not possible to sample the 222-SA Laboratory wastewater.

### 3.1.1 Wastestream Data

The wastestream data are made up of two distinct data sets: the chemical data set and the radiological data set (WHC 1990c).

**3.1.1.1 Chemical Data.** The chemical data set consists of four wastestream samples collected from the 207-SL Basin as grab samples from October 1989, through March 1990. All four samples were delivered to the contract laboratory for analysis. The chemical raw data (including only the detected analytes) are contained in Appendix B, Table B-1. Table 3-1 summarizes the analytical methods used to analyze the samples.

Representative samples were taken pursuant to EPA sampling and analytical protocols contained in Test Methods for Evaluating Solid Waste: Physical/Chemical Methods, SW-846 (EPA 1986). Grab samples of wastewater from the 207-SL Basin were collected randomly from various work shifts because the laboratory operates continuously on a demand basis. The details of sampling procedures and analytical procedures are contained in the *Waste Stream Characterization Report*, Volume 4 (WHC 1989a).

**3.1.1.2 Radiological Data.** Radiological data are presented for characterization completeness only, because they have no current impact on the dangerous waste designation. The radiological data set consists of four wastestream samples collected from the 207-SL Basin as grab samples from October 1989

Table 3-1. Procedures for 222-S Laboratory Wastewater Samples.
(sheet 1 of 2)

| LEAD# | 50661 | 50673 | 50804 | 51079 |
|---|---|---|---|---|
| CofC# | 50661 | 50673 | 50804 | 51079 |
| Alkalinity | X | X | X | X |
| Alpha counting | X | X | X | X |
| $^{241}Am$ | X | X | X | X |
| Ammonia | X | X | X | X |
| Arsenic | X | X | X | X |
| Atomic emission spectroscopy | X | X | X | X |
| Beta counting | X | X | X | X |
| $^{14}C$ | X | X | X | X |
| Conductivity-field | X | X | X | X |
| Curium isotopes | X | | X | X |
| Cyanide | X | X | X | X |
| Direct aqueous injection (GC) | X | X | X | X |
| Fluoride (LDL) | X | X | X | X |
| Gamma energy analysis | X | X | X | X |
| Hydrazine | X | X | X | X |
| Ion chromatography | X | X | X | X |
| Lead | X | X | X | X |
| Low-energy photon detection | X | | X | |
| Mercury | X | X | X | X |
| pH-field | X | X | X | X |
| Plutonium isotopes | X | X | X | X |
| Selenium | X | X | X | X |
| Semivolatile organics (GC/MS) | X | X | X | X |
| Strontium beta counting | X | X | X | X |
| Sulfide | X | X | X | X |
| Suspended solids | X | X | X | X |
| Temperature-field | X | X | X | X |
| Thallium | X | X | X | X |
| Total carbon | X | X | X | X |
| Total dissolved solids | X | X | X | X |
| Total organic carbon | X | X | X | X |
| Total organic halides (LDL) | X | X | X | X |
| Total radium alpha counting | X | X | X | X |
| Tritium | X | X | | X |
| Uranium | X | X | X | X |
| Uranium isotopes | X | X | X | X |
| Volatile organics (GC/MS) | X | X | X | X |
| LEAD# | 50661B | 50673B | 50804B | 51079B |
| CofC# | 50662 | 50674 | 50805 | 51080 |

Table 3-1. Procedures for 222-S Laboratory Wastewater Samples.
(sheet 2 of 2)

| | | | | |
|---|---|---|---|---|
| LEAD# | 50661E | 50673E | 50804E | 51079E |
| CofC# | 50664 | 50676 | 50807 | 51082 |
| Volatile organics (GC/MS) | X | X | X | X |
| LEAD# | 50661T | 50673T | 50804T | 51079T |
| CofC# | 50663 | 50675 | 50806 | 51081 |
| Volatile organics (GC/MS) | X | X | X | X |
| Atomic emission spectroscopy | X | X | X | X |
| Ignitability | X | X | X | X |
| Mercury (mixed matrix) | X | X | X | X |
| Reactive cyanide | X | X | X | X |
| Reactive sulfide | X | X | X | X |

Notes:

Procedures that were performed for a given sample are identified by an "X". Procedure references appear with the data.

LEAD# is the Liquid Effluent Analytical Data number that appears in the data reports. CofC# is the chain-of-custody number.

Abbreviations:

gas chromatography (GC)
low-detection limit (LDL)
mass spectrometry (MS)

through March 1990 from the 207-SL Basin. The radiological samples were analyzed at the contract laboratory. The radiological raw data are contained in Appendix B, Table B-1.

### 3.1.2 Background Data

Knowledge of the feed water makeup chemistry (background data) for the processes was used, in conjunction with other data, to identify effluent constituents attributable to facility additions. This knowledge guided the process evaluation as well as supported listed waste determinations. There will be no attempt in this report to subtract source levels from the final effluent composition used for designation purposes. The bearing this type of information may have on permit release limits is also beyond the scope of this report.

The 222-S Laboratory uses sanitary, distilled, and raw Columbia River water. The sanitary water is river water that has been filtered, treated with alum, clarified, and chlorinated. Radiological and chemical analyses of the 200 West Area sanitary and raw water are presented below.

**3.1.2.1 Chemical Background.** The chemical background data set is made up of four samples of 200 West Area sanitary water (2724-W) collected during the sampling campaign conducted October 1, 1989, through March 31, 1990. The 2724-W sanitary water data are used for comparison purposes because it best represents the available data for the 200 West Area sanitary water. The chemical background data are contained in Appendix B, Table B-3.

**3.1.2.2 Radionuclide Background.** The radionuclide background data set is made up of 200 West Area raw water data collected from 1986 through 1987. The radionuclide background data are contained in Appendix B, Table B-3.

## 3.2 DATA PRESENTATION

The purpose of data presentation is to determine which analytes are present in the 222-S Laboratory wastestream. Data reduction is approached in three steps: (1) determining which analyses were performed, (2) listing the analytes that were detected, and (3) developing a statistical summary.

Samples were analyzed according to procedures of EPA protocol SW-846 (EPA 1986), when available, recently introduced EPA methods, standard analytical methods, methods of the American Society for Testing and Materials, or, as a final default, by local laboratory methods. Current (as of July 25, 1989) contract laboratory analytical methods are listed in Table 3-2.

Field measurements (i.e., conductivity, pH, and temperature) were performed by the Westinghouse Hanford Company sampling team. Laboratory analyses were performed by the contract laboratory.

Table 3-2. Contract Laboratory Analytical Information Sheet (Revised 7/25/89). (sheet 1 of 2)

| Analysis | | Reference[a] methods |
|---|---|---|
| RCRA Screening Tests | | |
| Ignitability | | SW846 Sec. 7.1 |
| Corrosivity | | SW846 Sec. 7.2 |
| Reactivity | | SW846 Sec. 7.3 |
| Extraction Procedure Toxicity (EPTOX) | ORGANICS | SW846 Sec. 7.4 |
| | INORGANICS | SW846 Sec. 7.4 |
| | EXTRACTION | 1310 |

| Analysis | Detection limit[b] (water)ppm | |
|---|---|---|
| Suspended Solids | 5.000 | 209B |
| Coliform Bacteria | 2.2MPN | 9131 |
| Coliform Bacteria by Membrane Filter | 1 CPH | 9132 |
| Conductivity | | D1125A |
| pH | | 9040 |
| ICP Metals | [c] | 6010 |
| Chlorinated Pesticides[b] | 0.0001 | 8080 |
| Chlorinated Pesticides (Enhanced)[b] | 0.0001 | 8080 |
| Volatile Organic Analysis[b] | 0.010 | 8240 |
| A/B-N (Semivolatiles)[b] | 0.010 | 8270 |
| Phosphorus Pesticides[b] | 0.001 | 8140 |
| Anions ($NO_3$, $SO_4$, F, Cl, $PO_4$ IC)[b] | 0.500 | 300.0 |
| Herbicide (Enhanced)[b] | 0.0001 | 8150 |
| Polychlorinated Biphenyls[b] | 0.001 | 8080 |
| Arsenic | 0.005 | 7060 |
| Mercury | 0.0002 | 7470 |
| Selenium | 0.005 | 7740 |
| Thallium | 0.005 | 7841 |
| Lead | 0.005 | 7421 |
| TOX (Total Organic Halides) | 0.020 | 9020 |
| TOC (Total Organic Carbon) | 1.000 | 9060 |
| Total Carbon | 1.000 | 9060 |
| Cyanide | 0.010 | 9010 |
| Nitrate (or other individual anion, each) (F, Cl, Br, $NO_2$, $NO_3$, $PO_4$, $SO_4$) | 0.500 | 300.0 |
| Perchlorate | 1.000 | 300.0 |
| Sulfide | 1.000 | 9030 |
| Ammonium Ion | 0.050 | D1426D |
| Total Dissolved Solids | 5.000 | 209B |
| Alkalinity (Routine) | 20 | D1067B |
| Oil and Grease | 5.000 | 503A |
| Hydrazine | 0.030 | D1385 |
| Fluoride (by ISE) | 0.020 | D1179B |
| Aluminum[d] | 0.150 | |

Table 3-2. Contract Laboratory Analytical Information Sheet (Revised 7/25/89). (sheet 2 of 2)

| Analysis | Detection Limit[b] (water)ppm |
|---|---|
| Antimony[d] | 0.020 |
| Arsenic[d,e] | 0.050 |
| Barium[d] | 0.006 |
| Beryllium[e] | 0.005 |
| Boron[e] | 0.010 |
| Cadmium[d] | 0.002 |
| Calcium | 0.050 |
| Chromium[d] | 0.010 |
| Cobalt | 0.005 |
| Copper | 0.010 |
| Iron | 0.030 |
| Lead[d] | 0.030 |
| Magnesium | 0.050 |
| Manganese | 0.005 |
| Molybdenum | 0.010 |
| Nickel[d] | 0.010 |
| Potassium | 0.100 |
| Selenium[d,e] | 0.050 |
| Silicon[e] | 0.020 |
| Silver[d] | 0.010 |
| Sodium | 0.200 |
| Strontium | 0.020 |
| Tin | 0.050 |
| Vanadium[d] | 0.005 |
| Zinc[d] | 0.005 |

[a]Reference method numbers are as follows:

- 4 digit numbers--SW846, 3rd Ed, September 1987
- 4 digit numbers with decimal points--EPA method numbers
- A letter and 4 numbers--ASTM Methods.

Three numbers and a letter--Standard Methods for the Examination of Water and Wastewater, 16th Ed.

Some methods have been modified and extended to additional analytes.

[b]Detection limits for multiple analyte methods are "typical" for the method. Actual detection limits for particular analytes may be different, units are ppm unless otherwise noted.

[c]Metals by Inductively Couple Plasma emission spectroscopy (SW846 Method 6010). Up to 29 metals may be requested simultaneously.

[d]Appendix IX Hazardous Constituent, RCRA 40 CFR 264, and 270.

[e]Special handling and preparation procedures required, call for information.

The semivolatile and volatile organic analyses were by gas chromatography/mass spectrometry (GC/MS). The raw data were evaluated relative to the current mass spectral library of the National Bureau of Standards, EPA, and National Institutes of Health. This library is composed of approximately 40,000 chemical constituents, each with a unique "signature" on a gas chromatograph/mass spectrometer analysis. These spectral assignments were made for targeted compounds and tentatively identified compounds. Targeted compounds were evaluated by a standard search program for every sample that was analyzed by these GC/MS methods. The search included the constituents listed in Appendix IX of 40 CFR 264 (EPA 1987). Tentatively identified compounds are reported by the spectral search if their intensities are greater than 25% of the nearest internal standard.

Unknowns are reported for the semivolatile organic and volatile organic analyses that were performed by GC/MS. There are two distinct reasons for this qualitative uncertainty. The first reason is that the mass spectrum of a compound cannot be matched to any of the 40,000 spectra in the combined library. The second reason is that multiple compounds co-elute from the chromatographic column and their overlapping mass spectra cannot be matched to any of the pure compounds in the combined spectral library. Because compounds that co-elute are frequently members of a homologous series, the unknowns can be reported by their functionality. For example, a mixture of fatty acids can be quantitated and reported as six unique "unknown fatty acids."

Detection limits are contractual. They reflect the needs of potential applications of the data and are within the capabilities of the servicing laboratory. Current (as of July 25, 1989) contract laboratory detection limits are also shown in Table 3-2.

The total number of different analytes (both radiological and chemical) detected in the effluent samples was approximately 40 (some are unknown). Detection here is defined as the contract laboratory detection limits. Sampling data are summarized in Table 3-3. It should be noted that several analytes in Table 3-3 are included based on one analysis above detection limits; therefore, care should exercised in drawing conclusions for those analytes. It should also be noted that the units or exponents for the total dissolved solids (TDS) and suspended solids values appear to be in error. The raw water background radiological and chemical data summaries are listed in Appendix B, Table B-3.

Table 3-3. Chemical Data Summary.
(sheet 1 of 2)

| Constituent | N | MDA | Method | Mean | StdErr | 90%CILim | Maximum |
|---|---|---|---|---|---|---|---|
| Arsenic (EP Toxic) | 4 | 4 | n/a | <5.00E+02 | 0.00E+00 | <5.00E+02 | <5.00E+02 |
| Barium | 4 | 0 | n/a | 2.82E+01 | 1.97E+00 | 3.15E+01 | 3.30E+01 |
| Barium (EP Toxic) | 4 | 4 | n/a | <1.00E+03 | 0.00E+00 | <1.00E+03 | <1.00E+03 |
| Boron | 4 | 1 | DL | 1.65E+01 | 2.66E+00 | 2.09E+01 | 2.30E+01 |
| Cadmium (EP Toxic) | 4 | 4 | n/a | <1.00E+02 | 0.00E+00 | <1.00E+02 | <1.00E+02 |
| Calcium | 4 | 0 | n/a | 1.69E+04 | 8.31E+02 | 1.83E+04 | 1.90E+04 |
| Chloride | 4 | 0 | n/a | 3.70E+03 | 8.38E+02 | 5.07E+03 | 5.20E+03 |
| Chromium (EP Toxic) | 4 | 4 | n/a | <5.00E+02 | 0.00E+00 | <5.00E+02 | <5.00E+02 |
| Copper | 4 | 0 | n/a | 1.52E+02 | 3.54E+01 | 2.10E+02 | 2.47E+02 |
| Fluoride | 4 | 0 | n/a | 1.25E+02 | 8.50E+00 | 1.39E+02 | 1.42E+02 |
| Iron | 4 | 0 | n/a | 1.26E+02 | 3.72E+01 | 1.87E+02 | 2.25E+02 |
| Lead (EP Toxic) | 4 | 4 | n/a | <5.00E+02 | 0.00E+00 | <5.00E+02 | <5.00E+02 |
| Magnesium | 4 | 0 | n/a | 3.94E+03 | 1.74E+02 | 4.23E+03 | 4.35E+03 |
| Manganese | 4 | 2 | DL | 7.25E+00 | 1.31E+00 | 9.40E+00 | 1.00E+01 |
| Mercury (EP Toxic) | 4 | 4 | n/a | <2.00E+01 | 0.00E+00 | <2.00E+01 | <2.00E+01 |
| Nitrate | 4 | 3 | DL | 5.75E+02 | 7.50E+01 | 6.98E+02 | 8.00E+02 |
| Potassium | 4 | 0 | n/a | 7.64E+02 | 4.98E+01 | 8.46E+02 | 8.56E+02 |
| Selenium (EP Toxic) | 4 | 4 | n/a | <5.00E+02 | 0.00E+00 | <5.00E+02 | <5.00E+02 |
| Silicon | 4 | 0 | n/a | 1.95E+03 | 7.43E+01 | 2.07E+03 | 2.06E+03 |
| Silver (EP Toxic) | 4 | 4 | n/a | <5.00E+02 | 0.00E+00 | <5.00E+02 | <5.00E+02 |
| Sodium | 4 | 0 | n/a | 2.13E+03 | 1.82E+02 | 2.43E+03 | 2.55E+03 |
| Strontium | 4 | 0 | n/a | 9.15E+01 | 6.69E+00 | 1.02E+02 | 1.07E+02 |
| Sulfate | 4 | 0 | n/a | 1.31E+04 | 1.06E+03 | 1.48E+04 | 1.49E+04 |
| Uranium | 4 | 0 | n/a | 5.24E-01 | 1.49E-01 | 7.68E-01 | 9.58E-01 |
| Vanadium | 4 | 3 | DL | 5.50E+00 | 5.00E-01 | 6.32E+00 | 7.00E+00 |
| Zinc | 4 | 1 | DL | 1.52E+01 | 3.79E+00 | 2.15E+01 | 2.30E+01 |
| Acetone | 4 | 3 | DL | 1.02E+01 | 1.44E+00 | 1.26E+01 | 1.40E+01 |
| Ammonia | 4 | 2 | DL | 6.72E+01 | 1.03E+01 | 8.41E+01 | 9.10E+01 |
| Trichloromethane | 4 | 0 | n/a | 1.97E+01 | 2.50E+00 | 2.38E+01 | 2.50E+01 |
| Unknown amide | 1 | 0 | n/a | 2.60E+01 | n/a | n/a | 2.60E+01 |
| Alkalinity (Method B) | 4 | 0 | n/a | 4.75E+04 | 1.94E+03 | 5.07E+04 | 5.30E+04 |
| Alpha Activity (pCi/L) | 4 | 1 | DL | 2.00E+00 | 1.30E+00 | 4.14E+00 | 5.88E+00 |
| Beta Activity (pCi/L) | 4 | 2 | DL | 2.60E+00 | 1.09E+00 | 4.39E+00 | 5.00E+00 |
| Conductivity (µS) | 4 | 0 | n/a | 2.38E+02 | 1.03E+02 | 4.06E+02 | 5.46E+02 |
| Ignitability (°F) | 4 | 0 | n/a | 2.09E+02 | 1.26E+00 | 2.07E+02 | 2.06E+02 |
| pH (dimensionless) | 4 | 0 | n/a | 6.96E+00 | 1.78E-01 | 6.67E+00 | 6.60E+00 |
| Reactivity Cyanide (mg/kg) | 4 | 4 | n/a | <1.00E+02 | 0.00E+00 | <1.00E+02 | <1.00E+02 |
| Reactivity Sulfide (mg/kg) | 4 | 4 | n/a | <1.00E+02 | 0.00E+00 | <1.00E+02 | <1.00E+02 |
| Suspended Solids | 4 | 3 | DL | 9.25E+03 | 4.25E+03 | 1.62E+04 | 2.20E+04 |
| TDS | 4 | 0 | n/a | 5.82E+04 | 9.10E+03 | 7.31E+04 | 7.80E+04 |
| Temperature (°C) | 4 | 0 | n/a | 1.90E+01 | 1.76E+00 | 2.19E+01 | 2.26E+01 |
| TOC | 2 | 1 | DL | 1.05E+03 | 5.00E+01 | 1.20E+03 | 1.10E+03 |
| Total Carbon | 4 | 0 | n/a | 1.25E+04 | 3.04E+02 | 1.30E+04 | 1.30E+04 |
| TOX (as Cl) | 4 | 0 | n/a | 1.14E+02 | 1.09E+01 | 1.32E+02 | 1.33E+02 |

Table 3-3. Chemical Data Summary.
(sheet 2 of 2)

| Constituent | N | MDA | Method | Mean | StdErr | 90%CILim | Maximum |
|---|---|---|---|---|---|---|---|
| $^{241}$Am (pCi/L) | 4 | 0 | n/a | 7.86E-01 | 7.21E-01 | 1.97E+00 | 2.95E+00 |
| $^{14}$C (pCi/L) | 4 | 3 | DL | 2.61E+00 | 9.96E-01 | 4.24E+00 | 5.59E+00 |
| $^{3}$H (pCi/L) | 3 | 2 | DL | 1.75E+02 | 5.87E+01 | 2.86E+02 | 2.90E+02 |
| $^{238}$Pu (pCi/L) | 4 | 1 | DL | 1.61E-02 | 9.48E-03 | 3.16E-02 | 4.31E-02 |
| $^{239,240}$Pu (pCi/L) | 4 | 0 | n/a | 2.21E-01 | 1.74E-01 | 5.06E-01 | 7.42E-01 |
| Radium Total (pCi/L) | 3 | 2 | DL | 9.45E-02 | 4.92E-02 | 1.87E-01 | 1.74E-01 |
| $^{90}$Sr (pCi/L) | 4 | 3 | DL | 1.24E-01 | 6.03E-02 | 2.22E-01 | 2.93E-01 |
| $^{234}$U (pCi/L) | 4 | 0 | n/a | 1.05E-01 | 1.96E-02 | 1.38E-01 | 1.55E-01 |
| $^{238}$U (pCi/L) | 4 | 0 | n/a | 1.02E-01 | 1.69E-02 | 1.29E-01 | 1.30E-01 |

NOTES:

Mean values, standard errors, confidence interval limits and maxima are in ppb (parts per billion) unless indicated otherwise.

The column headed MDA (Minimum Detectable Amount) is the number of results in each data set below the detection limit.

The column headed Method shows the MDA replacement method used: replacement by the detection limit (DL), replacement of single-valued MDAs by the log-normal plotting position method (LM), or replacement of multiple valued MDAs by the normal plotting position method (MR).

The column headed "90%CILim" (90% Confidence Interval Limit) is the lower limit of the one-tailed 90% confidence interval for all ignitability data sets and pH data sets with mean values below 7.25. For all other data sets it is the upper limit of the one-tailed 90% confidence interval.

The column headed "Maximum" is the minimum value in the data set for ignitability, the value furthest from 7.25 for pH, and the maximum value for all other analytes.

This page intentionally left blank.

# 4.0 DATA OVERVIEW

This section presents a comparison of the process data set (see Section 2.0) with the sampling data set (see Section 3.0) to determine the identity and concentration levels of the chemical analytes present in the 222-S Laboratory wastestream. It also provides estimates of the stream loading for radionuclides and chemical constituents.

## 4.1 DATA COMPARISON

A qualitative comparison of process data and wastewater sampling data is presented in Table 4-1. The sampling data averages are taken from Table 3-5, in which the 222-S Laboratory wastewater chemical sample data collected from both compartments of the 207-SL Retention Basin have been combined. The process data are taken from Appendix A, Tables A-1 through A-6.

NOTE: Parameters such as conductivity, pH, temperature, and TDS are not included in Table 4-1.

It is apparent from Table 4-1 that all of the chemical analytes detected in the wastestream samples have identified possible sources in the process chemicals and the 222-S and 222-SA Laboratory chemicals, except for uranium. The uranium does not have an identified possible source in either the 222-S Laboratory or the 222-SA Laboratory.

As previously mentioned (Section 2.4), the chemicals that were stored over sinks included nitric acid, hydrochloric acid, sodium carbonate, Carbosorb, ammonium chloride/ammonium hydroxide, acetic acid, and ammonium acetate buffer. These chemicals were included in the wastestream sampling strategy.

The chemical analytes and radionuclides listed in Table 4-1 represent the best available characterization of the 222-S Laboratory wastestream. Additional wastewater sampling could be used to determine if the five process chemicals listed above should be added to Table 4-1. Additional sampling could also be helpful for identifying some of the unknowns and unknown aliphatic hydrocarbons.

Table 4-2 provides a comparison of average constituents concentrations to various screening criteria. These criteria are not used here for compliance purposes.

In order to assess the relevance of the chemical and radionuclide data, the mean of the analyte concentration was compared to the background mean concentration. A quantitative measure of the significance of the analytes detected was the ratio of sample mean to either background or a concentration guideline mean.

Table 4-1. Comparison of Sampling Data and Process Data.

| Chemical analytes | N | Sampling data, average (ppb) | Process data |
|---|---|---|---|
| Acetone | 4 | 1.0 E+01 | CS-SA, MA |
| Ammonium | 4 | 6.7 E+01 | PC, CS-S, CS-SA |
| Barium | 4 | 2.8 E+01 | CS-S, CS-SA |
| Boron | 4 | 1.7 E+01 | CS-S, CS-SA |
| Calcium | 4 | 1.7 E+04 | CS-S, CS-SA |
| Chloride | 4 | 3.7 E+03 | PC, CS-S, CS-SA |
| Chloroform | 4 | 2.0 E+01 | CS-SA |
| Copper | 4 | 1.5 E+02 | CS-S, CS-SA |
| Fluoride | 4 | 1.3 E+02 | CS-S, CS-SA |
| Iron | 4 | 1.3 E+02 | CS-S, CS-SA |
| Magnesium | 4 | 3.9 E+03 | PC, CS-S, CS-SA |
| Potassium | 4 | 7.6 E+02 | CS-S, CS-SA |
| Silicon | 4 | 2.0 E+03 | CS-S, CS-SA, MA |
| Sodium | 4 | 2.1 E+03 | CS-S, CS-SA |
| Strontium | 4 | 9.2 E+01 | CS-S, CS-SA |
| Sulfate | 4 | 1.3 E+04 | CS-S, CS-SA |
| TOC | 2 | 1.1 E+03 | PC, CS-S, CS-SA, MA |
| TOX | 4 | 1.1 E+02 | PC, CS-S, CS-SA, MA |
| Uranium | 4 | 5.2 E-01 | |
| Vanadium | 4 | 5.5 E+00 | CS-S, CS-SA |
| Zinc | 4 | 1.5 E+01 | CS-S, CS-SA |

N = Number of sample analyses.
PC = Process chemical.
CS-S = 222-S Laboratory chemical stock.
CS-SA = 222-SA Laboratory chemical stock.
MA = Maintenance area chemicals.

Table 4-2. Evaluation of 222-S Laboratory Wastewater.

| Constituent | Result[a] | SV1[b] | SV2[c] |
|---|---|---|---|
| Barium | 2.8E-02 | 5.0E+00 g | |
| Chloride | 3.7E+00 | 2.5E+02 h | |
| Copper | 1.5E-01 | 1.0E+00 h | |
| Fluoride | 1.2E-01 | 2.0E+00 g | |
| Iron | 1.3E-01 | 3.0E-01 h | |
| Manganese | 7.3E-03 | 5.0E-02 h | |
| Nitrate | 5.8E-01 | 4.5E+01 e | |
| Sulfate | 1.3E+01 | 2.5E+02 h | |
| Zinc | 1.5E-02 | 5.0E+00 h | |
| Trichloromethane[j] | 2.0E-02 | 1.0E-01 g | |
| Alpha Activity (pCi/L)[n] | 2.0E+00 | 1.5E+01 g | 3.0E+01 |
| $^{241}$Am (pCi/L) | 7.9E-01 | 4.0E+00 e | 3.0E+01 |
| Beta Activity (pCi/L) | 2.6E+00 | | 1.0E+03 |
| $^{14}$C (pCi/L) | 2.6E+00 | 3.0E+03 e | 7.0E+04 |
| $^{3}$H (pCi/L) | 1.8E+02 | 9.0E+04 e | 2.0E+06 |
| $^{238}$Pu (pCi/L) | 1.6E-02 | | 4.0E+01 |
| $^{239,240}$Pu (pCi/L)[l] | 2.2E-01 | 4.0E+01 e | 3.0E+01 |
| $^{90}$Sr (pCi/L) | 1.2E-01 | 5.0E+01 e | 1.0E+03 |
| $^{234}$U (pCi/L) | 1.0E-01 | | 5.0E+02 |
| $^{238}$U (pCi/L) | 1.0E-01 | | 6.0E+02 |
| TDS | 5.8E+01 | 5.0E+02 h | |

Notes:

[a]Units of results are mg/L unless indicated otherwise. The results are the mean values reported in the Statistics table of chapter 3.

[b]Screening Value 1 (SV1) lists the value first, basis second and an asterisk (*) third if the result exceeds the regulatory value. The basis is the proposed primary MCL (e), the proposed secondary MCL (f), the primary MCL (g), or the secondary MCL (h). The value is the smaller of two MCLs: the proposed primary MCL (or the primary MCL as a default) or the proposed secondary MCL (or the secondary MCL as a default). See WHC-EP-0342, "Hanford Site Stream-Specific Reports", August 1990.

[c]Screening Value 2 (SV2) lists the value first and an asterisk (*) second if the result exceeds the SV2). These values are derived concentration guides obtained from Appendix A of WHC-CM-7-5, "Environmental Compliance Manual", Revision 1, January 1990.

[j]The SV1 value for trihalomethanes is used to evaluate trichloromethane results.

[l]The SV1 value for $^{239}$Pu is used to evaluate $^{239,240}$Pu.

[n]The SV1 and SV2 values for Gross Alpha are used to evaluate Alpha Activity.

[o]The SV2 for Gross Beta is used to evaluate Beta Activity.

### 4.2.1 Chemical

Table 4-3 presents a comparison of background and sample means for the chemical analytes. Comparison ratios that exceed 1.0 are listed in Table 4-4. A review of this table shows most of the comparison ratios are less than one, and that a few are between 1 and 10.

The ratio for copper was 10 (probably from steam condensate corrosion of laboratory copper steam heating coils).

### 4.2.2 Radiological

In order to assess the relevance of the radionuclide data, the mean of the radionuclide concentration was compared to the background mean concentration. Comparison ratios that exceed 1.0 are listed in Table 4-4.

## 4.2 STREAM DEPOSITION RATES

The deposition rates for chemical and radiological constituents were calculated using the average constituents concentration from Table 3-3 and the wastewater stream average flow data from Section 2.4. This does not include contributors from the 222-SA Laboratory and the 291-S Facility wastestreams. The wastewater stream deposition rates are reported in kg/mo or Ci/mo and are presented in Table 4-5.

Table 4-3. Comparison of Detected Sample Data with Detected Background Data.

| Analyte | 222-S Laboratory Wastewater (Ave)(1) | Background (Ave)(1) | Comparison Ratio |
|---|---|---|---|
| Barium | 2.82E+01 | 2.90E+01(3) | 0.97 |
| Boron | 1.65E+01 | 1.77E+01(3) | 0.93 |
| Calcium | 1.69E+04 | 1.87E+04(3) | 0.90 |
| Chloride | 3.70E+03 | 2.92E+03(3) | 1.27 |
| Copper | 1.52E+02 | 1.52E+01(2) | 10.00 |
| Fluoride | 1.25E+02 | 1.28E+02(3) | 0.98 |
| Iron | 1.26E+02 | 3.27E+01(3) | 3.85 |
| Magnesium | 3.94E+03 | 4.35E+03(3) | 0.91 |
| Manganese | 7.25E+00 | 1.68E+01(2) | 0.43 |
| Nitrate | 5.75E+02 | 5.00E+02(3) | 1.15 |
| Potassium | 7.64E+02 | 7.28E+02(3) | 1.05 |
| Silicon | 1.95E+03 | 2.14E+03(3) | 0.94 |
| Sodium | 2.13E+03 | 2.05E+03(3) | 1.04 |
| Strontium | 9.15E+01 | 9.47E+01(3) | 0.97 |
| Sulfate | 1.31E+04 | 1.40E+04(3) | 0.94 |
| Uranium | 5.24E-01 | 2.54E-01(3) | 2.06 |
| Zinc | 1.52E+01 | 5.85E+01(3) | 0.26 |
| Acetone | 1.02E+01 | N. D. | |
| Ammonia | 6.72E+01 | N. D. | |
| Trichloromethane | 1.97E+01 | 2.82E+01(3) | 0.70 |
| Alpha Activity (pCi/L) | 2.00E+00 | 2.30E+00(2) | 0.87 |
| Beta Activity (pCi/L) | 2.60E+00 | 4.33E+00(3) | 0.60 |
| Conductivity (uS) | 2.38E+02 | 1.45E+02(3) | 1.64 |
| Suspended solids | 9.25E+03 | N. D. | |
| TSD | 5.82E+04 | 5.37E+04(3) | 1.08 |
| TOC (μg/g) | 1.05E+03 | 1.61E+03(3) | 0.65 |
| Total carbon (μg/g) | 1.25E+04 | 1.51E+04(3) | 0.83 |
| TOX [μg(Cl)/L] | 1.14E+02 | 1.42E+02(3) | 0.80 |

(1) Values are the mean value for the constituent and units are in ppb unless otherwise stated

(2) Compiled for Substance Toxicity Evaluation of Waste Data Base provided by F. M. Jungfleisch (this data is an update of the data presented in WHC 1988, *"Preliminary Evaluation of Hanford Liquid Discharges to Ground*).

(3) Data from sampling campaign conducted October 1, 1989 to March 30, 1990 in support of Stream Specific Reports

N. D. = Not Detected or analyzed for in background raw or sanitary water

Table 4-4. Comparison Ratios that Exceed 1.0.

| Analytes detected above background | Comparison ratio |
|---|---|
| Copper | 10.0 |
| Iron | 3.9 |
| Uranium | 2.1 |
| Conductivity* | 1.6 |
| Chloride | 1.3 |
| Nitrate | 1.2 |
| Potassium | 1.1 |
| TSD | 1.1 |

Note: Wastewater means are divided by background means to compute comparison ratios.
*Measurements taken in the field.

Table 4-5. Deposition Rate for 222-S Laboratory Wastewater.
Flowrate: 2.34E+06 L/mo.

| Constituent | Kg/L* | Kg/mo* |
|---|---|---|
| Barium | 2.82E-08 | 6.60E-02 |
| Boron | 1.65E-08 | 3.86E-02 |
| Calcium | 1.69E-05 | 3.95E+01 |
| Chloride | 3.70E-06 | 8.66E+00 |
| Copper | 1.52E-07 | 3.56E-01 |
| Fluoride | 1.25E-07 | 2.92E-01 |
| Iron | 1.26E-07 | 2.95E-01 |
| Magnesium | 3.94E-06 | 9.22E+00 |
| Manganese | 7.25E-09 | 1.70E-02 |
| Nitrate | 5.75E-07 | 1.35E+00 |
| Potassium | 7.64E-07 | 1.79E+00 |
| Silicon | 1.95E-06 | 4.56E+00 |
| Sodium | 2.13E-06 | 4.98E+00 |
| Strontium | 9.15E-08 | 2.14E-01 |
| Sulfate | 1.31E-05 | 3.07E+01 |
| Uranium | 5.24E-10 | 1.23E-03 |
| Vanadium | 5.50E-09 | 1.29E-02 |
| Zinc | 1.52E-08 | 3.56E-02 |
| Acetone | 1.02E-08 | 2.39E-02 |
| Ammonia | 6.72E-08 | 1.57E-01 |
| Trichloromethane | 1.97E-08 | 4.61E-02 |
| Unknown amide | 2.60E-08 | 6.08E-02 |
| Alpha Activity * | 2.00E-12 | 4.68E-06 |
| Beta Activity * | 2.60E-12 | 6.08E-06 |
| Suspended Solids | 9.25E-06 | 2.16E+01 |
| TDS | 5.82E-05 | 1.36E+02 |
| TOC | 1.05E-06 | 2.46E+00 |
| Total Carbon | 1.25E-05 | 2.92E+01 |
| TOX (as Cl) | 1.14E-07 | 2.67E-01 |
| $^{241}Am$ * | 7.86E-13 | 1.84E-06 |
| $^{14}C$ * | 2.61E-12 | 6.11E-06 |
| $^{3}H$ * | 1.75E-10 | 4.09E-04 |
| $^{238}Pu$ * | 1.61E-14 | 3.77E-08 |
| $^{239,240}Pu$ * | 2.21E-13 | 5.17E-07 |
| Radium Total * | 9.45E-14 | 2.21E-07 |
| $^{90}Sr$ * | 1.24E-13 | 2.90E-07 |
| $^{234}U$ * | 1.05E-13 | 2.46E-07 |
| $^{238}U$ * | 1.02E-13 | 2.39E-07 |

Notes:
Data collected from October 1989 through March 1990.
Flowrate is the average of rates from chapter 2.
Constituent concentrations are average values from the Statistics Report in Chapter 3.
Concentration units of flagged (*) constituents are reported as curies per liter.
Deposition rate units of flagged (*) constituents are reported as curies per month.

This page intentionally left blank.

# 5.0 DESIGNATION

This section proposes that the 222-S Laboratory Wastewater not be designated a dangerous waste. This proposed designation uses data from both the effluent source description and present sample data (Sections 2.0 through 4.0) and complies with the designation requirements of WAC 173-303-070.

Also this section proposes that the 291-A Facility cooling water and 222-SA Laboratory wastewater not be designated as dangerous wastes; however, their designation is based solely on process data.

As discussed in Section 3.1, the 291-S Facility wastestream is cooling (raw) water used to cool the exhaust fan oil both and does not contribute radioactive or chemical constituents to the 216-S-26 Crib. The 222-SA Laboratory wastestream, described in Section 2.2.1, is not a dangerous waste because all liquid hazardous waste is properly collected and managed according to WAC-173-303 requirements. All glassware used in preparing reagents and standards is triple rinsed before washing in ultrasonic cleaners. The rinsate is properly disposed of in labpacks. The ultrasonic cleaning solution is discharged directly to the 216-S-26 Crib. The remaining discussion in Chapter 5.0 pertains only to the 222-S Laboratory wastestream.

The Washington State Dangerous Waste Regulations (WAC 173-303-070) contains a procedure for determining whether a waste is a dangerous. This procedure is illustrated in Figure 5-1 and includes the following:

- Dangerous Waste Lists (WAC 173-303-080)
- Dangerous Waste Criteria (WAC 173-303-100)
- Dangerous Waste Characteristics (WAC 173-303-090).

## 5.1 DANGEROUS WASTE LISTS

A waste is considered a listed dangerous waste if it either contains a discarded chemical product (WAC 173-303-081) or originates from a dangerous waste source (WAC 173-303-082). The proposed designation was based on a contamination of process knowledge and present sampling data.

### 5.1.1 Discarded Chemical Products

A wastestream constituent is a discarded chemical product (WAC 173-303-081) if it is listed in WAC 173-303-9903 and is characterized by one or more of the following descriptions.

- The listed constituent was the sole active ingredient in a commercial chemical product that had been discarded. Commercial chemical products which, as purchased, contained two or more active

Figure 5-1. Illustration of the Designation Procedure.

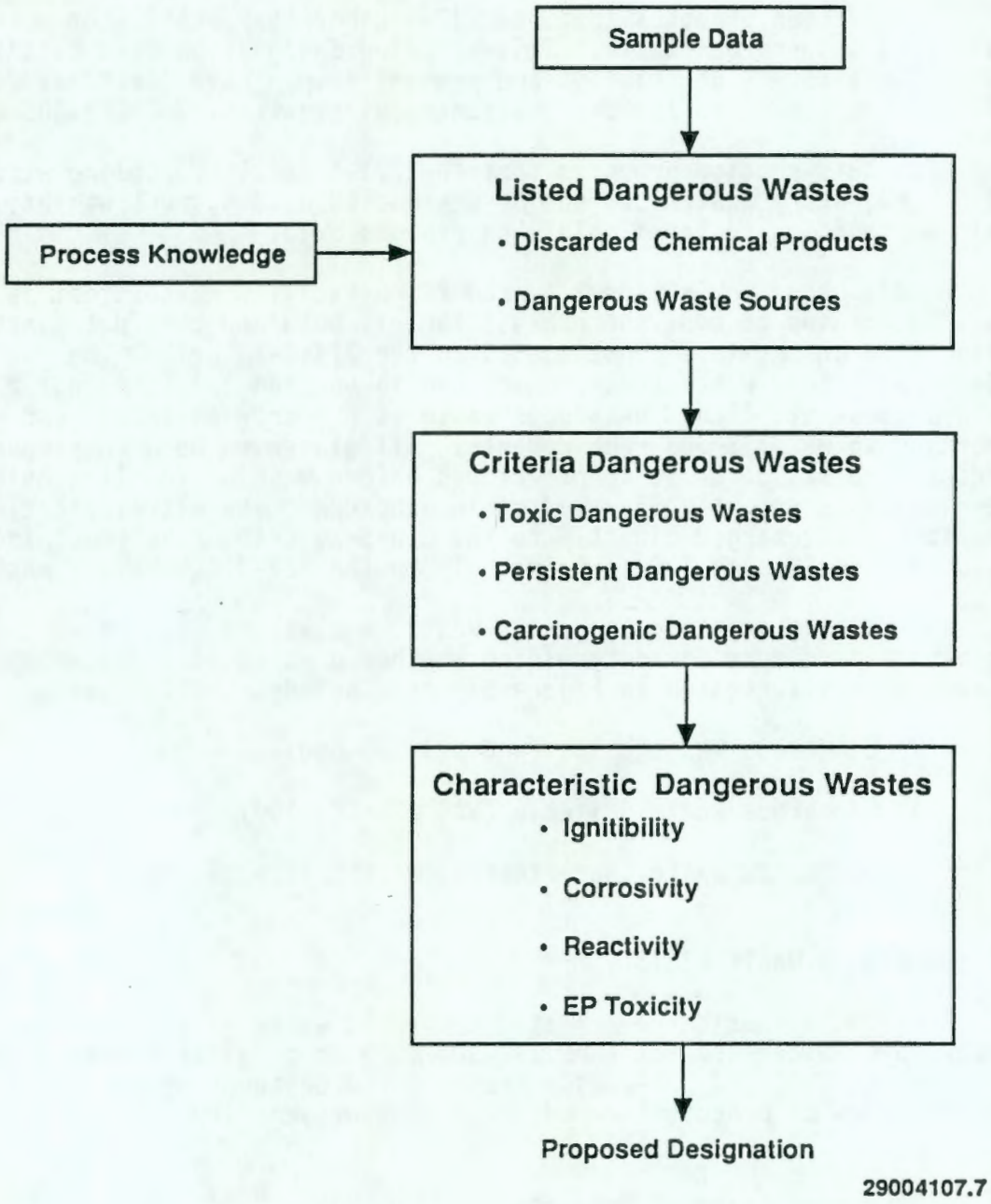

ingredients were not designated as discarded chemical products. Products that contained nonactive components such as water, however, were designated if the sole active ingredient in the mixture was listed in WAC 173-303-9903.

- The constituent results from a spill of unused commercial chemical products. (A spill of a discarded chemical product would cause a wastestream to be designated during the time that the discharge is occurring. The approach taken is that the current wastestream would not be designated unless a review of past spill events indicates that the spills are predictable, systematic events that are ongoing or are reasonably anticipated to occur in the future. In this report, the evaluation of this criterion is based on a review of spill data in accordance with the CERCLA.)

- The constituent is discarded in the form of a residue resulting from cleanup of a spill of an unused commercial chemical product on the discarded chemical products list. A chemical product that is used in a process and then released to the wastestream is not a discarded chemical product. Off-specification, unused chemicals, and chemicals that have exceeded a shelf life but have not been used are considered discarded chemical products.

### 5.1.2 Dangerous Waste Sources

A list of dangerous waste sources is contained in WAC 173-303-9904, pursuant to WAC 173-303-082. There are three major categories of sources in WAC 173-303-9904. The first is nonspecific sources from routine operations occurring at many industries. The second is specific sources (e.g., wastes from ink formulation, etc.). The third is state sources, which is limited to polychlorinated biphenyl (PCB)-contaminated transformers and capacitors resulting from salvaging, rebuilding, or discarding activities.

Of the nonspecific sources, only F001 (specific spent halogenated degreasing solvents), F002 (specific spent halogenated solvents), F003 (specific spent nonhalogenated solvents), and F005 (specific spent nonhalogenated solvents) apply to the 222-S Laboratory wastewater.

## 5.2 LISTED WASTE DATA CONSIDERATIONS

The proposed designation of the wastestream described in this report is based on an evaluation of process and sampling data. The following sections describe the types of information used in this designation.

### 5.2.1 Process Evaluation

The process evaluation began with a thorough review of the processes contributing to the wastestream. Processes were reviewed and compared with

the discarded chemical products list and the dangerous waste source list. This process evaluation is necessary because the stream could be a listed waste if a listed waste was known to have been added at any upstream location, even if a listed constituent was not detected at the sample point. The process evaluation included a review of the following information sources:

- MSDS
- Superfund Amendments and Reauthorization Act (SARA) Inventory reports
- Operating procedures
- Process chemical inventories
- Physical inspections, where possible.

Additionally, appropriate interviews with facility personnel were conducted to determine if there were any procedures laboratory processes that generated a listed waste that may not have been evident during other portions of the process evaluation.

If a listed chemical was identified, the specific use of the chemical was evaluated to determine if such use results in the generation of a listed waste.

### 5.2.2 Sampling Data

Present sampling data were used as screening tools to enhance and support the results of the process evaluation. This screening compared the results of the sampling data with the WAC 173-303-9903 and -9904 lists. If a constituent was cited on one or both of these lists, an engineering evaluation was performed to determine if the constituent had entered the wastestream as a discarded chemical product or came from a dangerous waste source.

Screening organic constituents is a relatively simple procedure because analytical data for organic constituents are reported as substances and are easily compared to the WAC 173-303-9903 and -9904 lists. It is not as simple to screen inorganic analytical data because inorganic data are reported as ions or elements rather than as substances. For example, an analysis may show that a wastestream contains the cations sodium and calcium along with the anions chloride and nitrate. The possible combinations of substances include: sodium chloride, sodium nitrate, calcium chloride, and calcium nitrate. In a situation with many cation and anions, however, the list of possible combinations is extensive.

A procedure was developed by Westinghouse Hanford Company for combining the inorganic constituents into substances. This screening procedure is

described in WHC (1990b) and is intended to be a tool in the evaluation of a wastestream. The listing of the inorganic substances developed by this screening procedure is not intended to be an indication that the substance was discharged to the wastestream, only that the necessary cations and anions are present and an investigation should be conducted to determine how they entered the wastestream. Table 5-1 documents how ion analytes were assigned to neutral substances which are required for designation. The table accounts for charge balancing the ion assemblage (from Table 3-3) and subsequent formulation of neutral substances. A detailed discussion can be found in the report entitled *Wastestream Designation for Liquid Effluent Analytical Data* (WHC 1990b).

## 5.3 PROPOSED LISTED WASTE DESIGNATION

A process evaluation, along with a review of sampling data, indicated that the 222-S Laboratory wastewater did not contain a discarded chemical product or a listed waste source. The following sections discuss the evaluation that was conducted to substantiate this conclusion.

### 5.3.1 Discarded Chemical Products

As discussed in Section 5.2, a process evaluation of the contributors to the 222-S Laboratory wastewater was conducted. This evaluation included a review of MSDS at the plant and chemical inventories compiled for compliance with the SARA Title III requirements for possible listed waste contributors. Inspections produced no evidence of the discharge of any of these chemical products into the 222-S Laboratory wastewater.

Table 5-2 contains a list of five potential discarded chemical products identified from sampling data using the screening procedure previously described in Section 5.2. Of these five compounds, three were identified in the process evaluation as being present in the facility. Each of these five compounds will be discussed in the following sections.

Based on the considerations and data presented in the following sections it is concluded that the 222-S Laboratory wastestream does not contain any discarded chemical products.

**5.3.1.1 Acetone.** Acetone is used in the 222-A Laboratory in the X-Ray laboratory (used when mounting samples). Interviews with personnel in this area and reviews of the procedures in place for disposal of unused or unwanted chemicals in this area provided no evidence that acetone had been disposed of as the sole active ingredient in an unused or out-of-specification chemical product.

Acetone appeared in one of the four samples taken of the wastewater stream. The concentration of acetone in the sample of the wastewater was 14 ppb. The rejection criteria for acetone based on blank analyses is 37 ppb as presented in Section 5.2 of the "parent" document, WHC-EP-0342.

Table 5-1. Inorganic Chemistry for the 222-S Laboratory Wastewater. (sheet 1 of 2)

| Constituent | ppb | Ion | Eq/g | Normalized |
|---|---|---|---|---|
| Charge Normalization: | | | | |
| Barium | 3.15E+01 | Ba+2 | 4.58E-10 | |
| Boron | 2.09E+01 | B4O7-2 | 9.65E-10 | 2.20E-09 |
| Calcium | 1.83E+04 | Ca+2 | 9.14E-07 | |
| Chloride | 5.07E+03 | Cl-1 | 1.43E-07 | 3.26E-07 |
| Copper | 2.10E+02 | Cu+2 | 6.62E-09 | |
| Fluoride | 1.39E+02 | F-1 | 7.31E-09 | 1.67E-08 |
| Iron | 1.87E+02 | Fe+3 | 1.01E-08 | |
| Magnesium | 4.23E+03 | Mg+2 | 3.48E-07 | |
| Manganese | 9.40E+00 | Mn+2 | 3.42E-10 | |
| Nitrate | 6.98E+02 | NO3-1 | 1.13E-08 | 2.57E-08 |
| Potassium | 8.46E+02 | K+1 | 2.16E-08 | |
| Silicon | 2.07E+03 | SiO3-2 | 1.47E-07 | 3.36E-07 |
| Sodium | 2.43E+03 | Na+1 | 1.06E-07 | |
| Strontium | 1.02E+02 | Sr+2 | 2.34E-09 | |
| Sulfate | 1.48E+04 | SO4-2 | 3.09E-07 | 7.04E-07 |
| Uranium | 7.68E-01 | UO2+2 | 6.46E-12 | |
| Vanadium | 6.32E+00 | V+5 | 6.20E-10 | |
| Zinc | 2.15E+01 | Zn+2 | 6.57E-10 | |
| Hydrogen Ion (from pH 6.7) | | H+ | (2.12E-10) | |
| Hydroxide Ion (from pH) | | OH- | (4.72E-11) | |
| Cation total | | | 1.41E-06 | |
| Anion total | | | 6.19E-07 | |
| Anion normalization factor: | 2.280 | | | |

Substance Formation:

| Substance | % | Cation Out | Anion Out |
|---|---|---|---|
| Copper(II) chloride | 4.45E-05 | 0.00E+00 | 3.20E-07 |
| Uranyl nitrate | 1.27E-07 | 0.00E+00 | 2.57E-08 |
| Vanadium(V) oxide | 1.13E-06 | 0.00E+00 | |
| Iron(III) fluoride | 3.78E-05 | 0.00E+00 | 6.62E-09 |
| Potassium fluoride | 3.85E-05 | 1.50E-08 | 0.00E+00 |
| Barium chloride | 4.77E-06 | 0.00E+00 | 3.19E-07 |
| Zinc nitrate | 6.22E-06 | 0.00E+00 | 2.50E-08 |
| Magnesium chloride | 1.52E-03 | 2.90E-08 | 0.00E+00 |
| Magnesium nitrate | 1.97E-04 | 4.01E-09 | 0.00E+00 |
| Calcium tetraborate | 2.15E-05 | 9.12E-07 | 0.00E+00 |
| Magnesium sulfate | 2.41E-05 | 0.00E+00 | 7.00E-07 |
| Sodium metasilicate | 6.45E-04 | 0.00E+00 | 2.30E-07 |
| Potassium metasilicate | 1.16E-04 | 0.00E+00 | 2.15E-07 |
| Manganese(II) metasilicate | 2.24E-06 | 0.00E+00 | 2.15E-07 |
| Strontium sulfate | 2.15E-05 | 0.00E+00 | 6.97E-07 |
| Calcium sulfate | 4.75E-03 | 2.14E-07 | 0.00E+00 |

Table 5-1. Inorganic Chemistry for the 222-S Laboratory Wastewater.
(sheet 2 of 2)

NOTES:

Statistics based on a single datum are noted by an asterisk (*). With the exception of hydrogen ion and hydroxide, others report the upper limit of the one-tailed 90% confidence interval. Hydrogen ion is based on the lower limit of the one-tailed 90% confidence interval for pH sets with mean values below 7.25 and on the upper limit of the one-tailed 90% confidence interval for pH data sets with mean values of 7.25 or higher. The hydroxide magnitude is equal to 1.00E-20 (Eq/g)**2 divided by the hydrogen ion value (in Eq/g).

Ion concentrations in equivalents per gram (Eq/g) are based on the statistic. Conversions include scale (ppb to g/g), molecular weight (constituent form to ionic form), and equivalents (charges per ion). The column headed "Normalized" shows normalized concentrations (also in Eq/g) calculated by increasing concentrations of cations, excluding Hydrogen ion, or anions, excluding hydroxide, by the normalization factor. The normalization factor is the larger of the cation total, including Hydrogen ion, or anion total, including hydroxide, divided by the smaller total.

Substance names may include MB (monobasic), DB (dibasic), TB (tribasic) to identify the equivalents of hydrogen ion that have been neutralized from polycrotic weak acids to form their conjugate bases.

Substances are formulated in the order listed. The column headed "%" is the percent of the substance in the waste (gms/100gms). Substances formulated with oxygen are based on the residual concentration of the counterion. Other substance concentrations are based on the limiting residual concentration of the cation or anion. The columns headed "Cation Out" and "Anion Out" indicate the residual concentrations (in Eq/g) of each ion after a substance concentration has been calculated.

Table 5-2. Dangerous Waste Designation Report for 222-S Laboratory Wastewater. (sheet 1 of 2)

Dangerous Waste Data Designation Report for 222-S Laboratory Wastewater

Finding: Undesignated

Discarded Chemical Products - WAC 173-303-081

| Substance | Review Number | Status | DW Number |
|---|---|---|---|
| Ammonium metavanadate | P119(EHW) | Not Discarded | Undesignated |
| Hydrogen fluoride | U134(DW) | Not Discarded | Undesignated |
| Vanadium(V) oxide | P120(EHW) | Not Discarded | Undesignated |
| Acetone | U002(DW) | Not Discarded | Undesignated |
| Trichloromethane | U044(EHW) | Not Discarded | Undesignated |

Dangerous Waste Sources - WAC 173-303-082

| Substance | Review Number | Status | DW Number |
|---|---|---|---|
| Acetone | F003 | Unlisted Source | Undesignated |

Infectous Dangerous Waste - WAC 173-303-083

No regulatory guidance

Dangerous Waste Mixtures - WAC 173-303-084

| Substance | Toxic EC% | Persistant HH% | Persistant PAH% | Carcinogenic Total% |
|---|---|---|---|---|
| Barium chloride | 4.77E-09 | 0.00E+00 | 0.00E+00 | 0.00E+00 |
| Calcium tetraborate | 2.15E-09 | 0.00E+00 | 0.00E+00 | 0.00E+00 |
| Copper(II) chloride | 4.45E-06 | 0.00E+00 | 0.00E+00 | 0.00E+00 |
| Iron(III) fluoride | 3.78E-07 | 0.00E+00 | 0.00E+00 | 0.00E+00 |
| Magnesium chloride | 1.52E-07 | 0.00E+00 | 0.00E+00 | 0.00E+00 |
| Magnesium nitrate | 1.97E-08 | 0.00E+00 | 0.00E+00 | 0.00E+00 |
| Magnesium sulfate | 2.41E-09 | 0.00E+00 | 0.00E+00 | 0.00E+00 |
| Potassium fluoride | 3.85E-08 | 0.00E+00 | 0.00E+00 | 0.00E+00 |
| Sodium metasilicate | 6.45E-08 | 0.00E+00 | 0.00E+00 | 0.00E+00 |
| Uranyl nitrate | 1.27E-09 | 0.00E+00 | 0.00E+00 | 0.00E+00 |
| Vanadium(V) oxide | 1.13E-08 | 0.00E+00 | 0.00E+00 | 0.00E+00 |
| Zinc nitrate | 6.22E-09 | 0.00E+00 | 0.00E+00 | 0.00E+00 |
| Acetone | 1.26E-10 | 0.00E+00 | 0.00E+00 | 0.00E+00 |
| Ammonia | 8.41E-08 | 0.00E+00 | 0.00E+00 | 0.00E+00 |
| Trichloromethane | 2.38E-07 | 2.38E-06 | 0.00E+00 | 2.38E-06 |
| Total | 5.45E-06 | 2.38E-06 | 0.00E+00 | 2.38E-06 |
| DW Number | Undesignated | Undesignated | Undesignated | Undesignated |

Dangerous Waste Characteristics - WAC 173-303-090

| Characteristic | Value | DW Number |
|---|---|---|
| Ignitability (Degrees F) | >207 | Undesignated |
| Corrosivity-pH | 6.67 | Undesignated |
| Reactivity Cyanide (mg/kg) | <1.00E+02 | Undesignated |
| Reactivity Sulfide (mg/kg) | <1.00E+02 | Undesignated |
| EP Toxic Arsenic (mg/L) | <5.00E-01 | Undesignated |
| EP Toxic Barium (mg/L) | <1.00E+00 | Undesignated |
| EP Toxic Cadmium (mg/L) | <1.00E-01 | Undesignated |
| EP Toxic Chromium (mg/L) | <5.00E-01 | Undesignated |
| EP Toxic Lead (mg/L) | <5.00E-01 | Undesignated |
| EP Toxic Mercury (mg/L) | <2.00E-02 | Undesignated |
| EP Toxic Selenium (mg/L) | <5.00E-01 | Undesignated |
| EP Toxic Silver (mg/L) | <5.00E-01 | Undesignated |

Table 5-2. Dangerous Waste Designation Report for 222-S Laboratory Wastewater. (sheet 2 of 2)

Dangerous Waste Data Designation Report for 222-S Laboratory Wastewater

Dangerous Waste Criteria - WAC 173-303-100

| Substance | Toxic EC% | Persistant HH% | Persistant PAH% | Carcinogenic Total% | DW Number-Positive |
|---|---|---|---|---|---|
| Barium chloride | 4.77E-09 | 0.00E+00 | 0.00E+00 | 0.00E+00 | |
| Calcium tetraborate | 2.15E-09 | 0.00E+00 | 0.00E+00 | 0.00E+00 | |
| Copper(II) chloride | 4.45E-06 | 0.00E+00 | 0.00E+00 | 0.00E+00 | |
| Iron(III) fluoride | 3.78E-07 | 0.00E+00 | 0.00E+00 | 0.00E+00 | |
| Magnesium chloride | 1.52E-07 | 0.00E+00 | 0.00E+00 | 0.00E+00 | |
| Magnesium nitrate | 1.97E-08 | 0.00E+00 | 0.00E+00 | 0.00E+00 | |
| Magnesium sulfate | 2.41E-09 | 0.00E+00 | 0.00E+00 | 0.00E+00 | |
| Potassium fluoride | 3.85E-08 | 0.00E+00 | 0.00E+00 | 0.00E+00 | |
| Sodium metasilicate | 6.45E-08 | 0.00E+00 | 0.00E+00 | 0.00E+00 | |
| Uranyl nitrate | 1.27E-09 | 0.00E+00 | 0.00E+00 | 0.00E+00 | |
| Vanadium(V) oxide | 1.13E-08 | 0.00E+00 | 0.00E+00 | 0.00E+00 | |
| Zinc nitrate | 6.22E-09 | 0.00E+00 | 0.00E+00 | 0.00E+00 | |
| Acetone | 1.26E-10 | 0.00E+00 | 0.00E+00 | 0.00E+00 | |
| Ammonia | 8.41E-08 | 0.00E+00 | 0.00E+00 | 0.00E+00 | |
| Trichloromethane | 2.38E-07 | 2.38E-06 | 0.00E+00 | 2.38E-06 | Undesignated |
| Total | 5.45E-06 | 2.38E-06 | 0.00E+00 | 2.38E-06 | |
| DW Number | Undesignated | Undesignated | Undesignated | Undesignated | |

Dangerous Waste Constituents - WAC 173-303-9905

Substance
Ammonium metavanadate
Hydrogen fluoride
Acetone
Trichloromethane
Barium and compounds,NOS

Substance names may include MB (monobasic), DB (dibasic), or TB (tribasic) to identify the equivalence of hydrogen ion that have been nutralized from polyprotic weak acids to form their conjugate bases.

Results based on a single datum are noted by an asterisk (*). Others are based on the lower limit of the one-tailed 90% confidence interval for pH data sets with mean values below 7.25 or by the upper limit of the one-tailed 90% confidence interval for all other data sets.

EP Toxic contaminants, ignitability, and reactivity are reported by standard methods when available. In the absence of EP Toxicity data, total contaminant concentrations are evaluated. In lieu of closed cup ignition results, ignitability is estimated from the sum of the contributions of all substances that are ignitable when pure. A waste is flagged as dangerous if sum of the ignitable substances exceeds one percent. Reactivity is by SW-846: 250 mg of cyanide as hydrogen cyanide per kg of waste or 500 mg of sulfide as hydrogen sulfide per kg of waste. Total cyanide and total sulfide are used in lieu of amenable cyanide and amenable sulfide.

Inorganic substances are fomulated and their possible concentrations calculated for designation purposes only. The actual existance in the waste of these substances is not implied and should not be infered.

As the concentration of acetone seen in this wastewater stream is less than the rejection criteria, this data will not be considered in the designation of wastestream samples because of sample contamination.

**5.3.1.2 Ammonium Metavanadate.** Ammonium is an active ingredient in the liquid laboratory cleaner used in ultrasonic cleaners. The vanadium was detected in 1 of 4 samples. Although ammonium metavanadate is listed in the Appendix A chemical inventory, it is not the sole active ingredient of products used in 222-S Laboratory operations processes. Review of the procedures in place for disposal of unwanted or unused chemicals provided no evidence that ammonium metavanadate had been discarded as the sole active ingredient in an unused or out-of-specification chemical product.

**5.3.1.3 Chloroform.** Chloroform (trichloromethane) is used in 222-S Laboratory in research (as an extractant). Interviews with personnel in this area and reviews of the procedures in place for disposal of unused or unwanted chemicals in this area provided no evidence that chloroform had been disposed of as the sole active ingredient in an unused or out-of-specification chemical product.

Chloroform appeared in all of the four samples taken of the wastewater stream. The concentration of chloroform in all samples of the wastewater ranged from 20 to 25 ppb. The rejection criteria for chloroform based on sanitary water supplied to 222-S Laboratory is 50 ppb as presented in Section 5.2 of WHC-EP-0342. As the concentration of chloroform seen in all of the samples of this wastewater stream is less than the rejection criteria, these data will not be considered in the designation of the wastestream as it is likely that chloroform is present in these wastestream samples because of the presence of chloroform in the facility water supply.

**5.3.1.4 Hydrogen Fluoride.** Hydrogen fluoride (48% aqueous solution) is used in the 222-S Laboratory in the environmental laboratory (dissolve radioactive solid samples). The waste solution is properly disposed of to the 219-S Facility. Interviews with personnel in this area and reviews of the procedures in place for disposal of unused or unwanted chemicals in this area provided no evidence that hydrogen fluoride had been disposed of as the sole active ingredient in an unused or out-of-specification chemical product.

Hydrogen fluoride appeared in all of the four samples taken of the wastewater stream. The concentration of fluoride in all samples of the wastewater ranged from 119 to 142 ppb. The rejection criteria for mono-fluorides based on sanitary water supplied to 222-S Laboratory is 143 ppb as presented in Section 5.2 of WHC-EP-0342. As the concentration of hydrogen fluoride seen in all of the samples of this wastewater stream is less than the rejection criteria, these data will not be considered in the designation of the wastestream as it is likely that hydrogen fluoride is present in these wastestream samples due to the presence of fluoride in the facility water supply.

**5.3.1.5 Vanadium Oxide.** Vanadium oxide is listed in the Appendix A chemical inventory but is not used in 222-S Laboratory processes or analytical

procedures. Review of the procedures in place for disposal of unwanted or unused chemicals provided no evidence that vanadium oxide had been discarded as the sole active ingredient in an unused or out-of-specification chemical product. Vanadium is a common trace element in soil at the Hanford Site. The probable method of entrance of vanadium into the wastewater is from blow sand entering the 207-SL Basin.

Based on the considerations and data presented in the previous sections, it is concluded that the 222-S Laboratory wastestream does not contain any discarded chemical products.

### 5.3.2 Dangerous Waste Sources

The process evaluation (see Section 5.2) was also used to determine if the wastestream included any specific waste sources (K and W wastes) or any nonspecific waste sources (F wastes) in the Dangerous Waste Source List WAC 173-303-9904.

Based on the discussion and data presented in the following sections, it is concluded that the 222-S Laboratory wastestream does not have a dangerous waste source.

**5.3.2.1 Process Data.** Of the known and routine discharges to the 222-S Laboratory wastewater system, the glassware cleaners, air-washer biocides, corrosion inhibitor, and steam line treatments are not listed as specific or nonspecific dangerous waste sources. Ultrasonic cleaning solutions of unknown compositions used in the 222-SA Laboratory should be characterized to determine whether they would be listed sources; however, they are not expected to be listed sources.

The 20% glycerine/3% formalin preservative solution contained in new 222-SA Laboratory ion exchange columns may contain methyl alcohol, which is a listed source as a spent solvent. Formalin is a solution of about 37 wt% of formaldehyde gas in water, usually with 10-15% methanol added to prevent polymerization (Merck & Co., Inc., 1989). The composition of the solution in the ion exchange columns is thus approximately: 20% glycerine, 1.1% formaldehyde, and 0.3 to 0.45% methanol. Because the methanol is not present as a solvent, the glycerine/formalin solution is not a listed dangerous waste source.

The chemical stocks stored in plunger-type dispensing bottles that were situated over laboratory sinks are not identified on the lists of specific or nonspecific dangerous waste sources. Therefore, they are not listed wastes.

**5.3.2.2 Sampling Data.** Acetone is the only detected substance on the WAC 173-303-9904 list.

Acetone is used in the 222-S laboratory in the following area: X-Ray Laboratory (used when mounting samples). Interviews with personnel in these areas and reviews of the procedures in place for disposal of spent chemicals in this area provided no evidence that acetone had been disposed of as a waste solvent.

Acetone appeared in one of the four samples taken of the wastewater stream. The concentration of acetone in the sample of the wastewater 14 ppb. The rejection criteria for acetone based on blank analyses if 37 ppb as presented in Section 5.2 of the "parent" document of WHC-EP-0342. As the concentration of acetone seen in this wastewater stream is less than the rejection criteria, this data will not be considered in the designation of the wastestream as it is likely that the acetone is present in this wastestream samples due to sample contamination.

Based on this analysis, the 222-S Laboratory is not considered a nonspecific-source listed waste.

## 5.4 DANGEROUS WASTE CRITERIA

A waste is considered a dangerous waste if it meets any of the following criteria categories (WAC 173-303-100): toxic dangerous waste, persistent dangerous waste, or carcinogenic dangerous waste. A description of the methods used to test the sampling data against the criteria is contained in WHC 1990b. Summaries of the methods, along with the results, are contained in the following sections.

### 5.4.1 Toxic Dangerous Wastes

The procedure for determining if a wastestream is a toxic dangerous waste is as follows (WAC 173-303-101).

- Collect and analyze multiple samples from the wastestream.
- Calculate the upper limit of the one-sided 90% confidence interval for each analyte in the wastestream.
- Formulate substances from the analytical data. NOTE: This step is only required for inorganic analytes because it is not possible to complete the evaluation based on the concentrations of cations and anions. This methodology is described in WHC 1990b and is based on an evaluation of the most toxic substances that can exist in an aqueous environment under normal temperatures and pressures.
- Assign toxic categories to the neutral substances formulated for the wastestream.
- Calculate the contribution of each substance to the percent equivalent concentration (EC%).

- Calculate the EC% by summing the concentrations of each substance.
- Designate the wastestream as a toxic dangerous waste if the EC% is greater than 0.001%, per WAC 173-303-9906.

Fifteen substances potentially present in the 222-S Laboratory wastewater were determined to have toxic categories associated with them. The individual and sum equivalent values for these substances are listed in Table 5-2. The contributions to the EC% and the EC% values for these substances are listed in Table 5-2.

Because the sum EC% is 5.45 E-06, which is below the cutoff of 1.0 E-03 (i.e., 0.001%), the wastestream is not a toxic dangerous waste.

### 5.4.2 Persistent Dangerous Wastes

The procedure for determining if a wastestream is a persistent dangerous waste is as follows (WAC 173-303-102).

- Collect multiple grab samples of the wastestream.
- Determine which substances in the wastestream are halogenated hydrocarbons (HH) and which are polycyclic aromatic hydrocarbons (PAH).
- Determine the upper limit of the one-sided 90% confidence interval for the substances of interest.
- Calculate the weight (wt%) contribution of each HH and PAH.
- Sum the resulting HH% and PAH% contributions separately.
- Designate the wastestream as persistent if the HH% concentration is greater than 0.01% or if the PAH% concentration is greater than 1.0%, in accordance with WAC 173-303-9907.

The individual and sum equivalent values for these substances are listed in Table 5-2. One substance, chloroform, was determined to be a halogenated hydrocarbon; no substances were determined to be polycyclic aromatic hydrocarbons. Because the HH% for chloroform is 2.38 E-06% (0.00000238%), well below 0.001 wt% limit at which the waste becomes regulated for persistence, the 222-S Laboratory wastestream is not a persistent dangerous waste.

### 5.4.3 Carcinogenic Dangerous Wastes

The procedure for determining if a wastestream is a carcinogenic dangerous waste is as follows (WAC 173-303-103).

- Collect multiple grab samples of the wastestream.
- Determine the upper limit of the one-sided 90% confidence interval for the substances of interest.
- Formulate substances from the analytical data. NOTE: This step is only required for inorganic analytes because it is not possible to complete the evaluation based on the concentrations of cations and anions. This methodology is described in WHC 1990b and is based on an evaluation of the carcinogenic substances that exist in an aqueous environment under normal temperatures and pressures.
- Determine which substances in the wastestream are human or animal carcinogens according to the International Agency for Research on Cancer (IARC).
- Calculate the wt% concentration for each carcinogen.
- Sum the resulting wt% contributions.
- Designate the wastestream as carcinogenic if any of the carcinogens are above 0.01% or if the total concentration is for positive and suspected carcinogens above 1.0%.

One substance, chloroform, potentially present in the 222-S Laboratory wastestream was determined to be a carcinogenic substance. The value for chloroform is listed in Table 5-2. Because the positive carcinogen does not exceed 0.01% and the sum is well below 1.0%, the 222-S Laboratory wastestream is not a carcinogenic dangerous waste.

## 5.5 DANGEROUS WASTE CHARACTERISTICS

A waste is considered a dangerous waste if it is ignitable, corrosive, reactive, or extraction procedure (EP) toxic (WAC 173-303-090). A description of the methods used to evaluate the data in terms of these characteristics is contained in WHC 1990b. Summaries of the methods, along with the results, are contained in the following sections. The summaries of these results may be found in Table 5-2.

### 5.5.1 Ignitability

Flashpoint testing was performed on the 222-S Laboratory liquid effluent samples. All samples reached the boiling temperature of water without

igniting. These data are not included in Table 5-2. Therefore, the 222-S Laboratory wastestream is not an ignitable waste.

### 5.5.2 Corrosivity

A waste is a corrosive dangerous waste if it has a pH of $\leq$2.0 or $\geq$12.5. The comparison to this characteristic was based on the lower limit of the one-sided 90% confidence interval for a stream with a mean value of pH <7.25 and the upper limit of the one-sided 90%Cl for a stream with a mean value of $\geq$7.25.

Because the mean value of the pH measurements for the 222-S Laboratory wastewater is below 7.25 the lower confidence interval limit, 6.67, is used. The wastestream is not a corrosive dangerous waste (WAC 173-303-090[6]).

### 5.5.3 Reactivity

An aqueous waste is reactive if the waste contains an amount of cyanide or sulfide under conditions near corrosivity to threaten human health or the environment (WAC 173-303-090[7]). If levels of (equivalent) hydrogen cyanide (HCN) below 250 ppm or of (equivalent) $H_2S$ below 100 mg/kg are not considered reactive.

Total cyanide and total sulfide levels in the 222-S Laboratory wastewater were below the 100 mg/kg detection limit. This wastestream is not a reactive dangerous waste.

### 5.5.4 Extraction Procedure Toxicity

A waste is an EP toxic dangerous waste if contaminant results from EP toxicity testing exceed the limits of WAC 173-303-090(8)(c). The EP toxicity test results are listed in Table 5-2. All analytes in the EP toxicity test had concentrations below the EP toxicity detection limits; therefore, the 222-S Laboratory wastestream is not an EP toxic dangerous waste.

## 5.6 PROPOSED DESIGNATION

Because the 222-S Laboratory wastestream does not contain any dangerous waste, as defined in WAC 173-303-070, it is proposed that the wastestream not be designated a dangerous waste. Also, it is proposed, based only on process knowledge, that the 291-S Building and 222-SA Laboratory wastestreams not be designated as dangerous waste.

This page intentionally left blank.

# 6.0 ACTION PLAN

This chapter addresses recommendations for future waste characterization tasks for the liquid effluents that are within the scope of the Liquid Effluent Study. The final extent of and schedule for any recommended tasks are subject to negotiation between Ecology, EPA and DOE. An implementation schedule for the completion of these tasks will give consideration to other compliance actions already under way as part of the Tri-Party Agreement (Ecology et al. 1989), an on the availability of funding. All effluent monitoring and sampling will be conducted according to DOE Order 5400.1, ("General Environmental Protection Program," issued November 9, 1988).

## 6.1 FUTURE SAMPLING

The random sampling conducted during the October 1989 to March 1990 period included only the 222-S Laboratory wastestream. It did not include the 222-SA Laboratory wastestream or the 291-S Facility cooling water. It is recommended that the 291-S cooling water be sampled at the outlet box from the 207-SL Basin to the 216-S-26 Crib to verify the process knowledge. It is currently not possible to sample the 222-SA Laboratory wastestream. However, it is recommended that the wastestream, with all stream contributors, be sampled from manhole #3, located west of the 216-S-26 Crib.

## 6.2 TECHNICAL ISSUES

A number of chemicals in routine use, including ultrasonic cleaning solutions at 222-SA, and air/water treatment compounds are not fully characterized. The annual amount used should be estimated and the composition verified for products listed in Table A-1 of Appendix A. The concentrations estimated to be discharged should be compared to the defining criteria for dangerous waste mixtures.

The commercial products Poly Mate 4690 and Super Filmeen 14 listed in Table A-1 of Appendix A have been discontinued by their manufacturer. Replacement products, their composition and estimated usage, should be identified for comparison to the designation regulations.

The 291-S cooling water and 222-SA Laboratory wastewater should be routed to the 207-SL Basin upstream from the proportional sampler. This would ensure that any chemical or radioactive contamination would be detected prior to release of the effluent to the 216-S-26 Crib and would allow flow measurement of all wastestream contributors. The 222-S Laboratory is actively pursuing funding for completing this project (described fully in Section 2.2.3) during FY 1993.

This page intentionally left blank.

## 7.0 REFERENCES

Coony, F. M., D. B. Howe, and L. J. Voigt, 1988, *Westinghouse Hanford Company Effluent Releases and Solid Waste Management Report for 1987: 200/600/1100 Areas*, WHC-EP-0141, Westinghouse Hanford Company, Richland, Washington.

Coony, F. M. and S. P. Thomas, 1989, *Westinghouse Hanford Company Effluent Discharges and Solid Waste Management Report for Calendar Year 1988: 200/600 Areas*, WHC-EP-0141-1, Westinghouse Hanford Company, Richland, Washington.

Ecology, 1989, *Dangerous Waste Regulations*, Washington Administrative Code (WAC) 173-303, Washington State Department of Energy, Olympia, Washington.

Engineering-Science, Inc., 1989, *Best Available Technology (BAT) Study for the 222-S Laboratory*.

EPA, 1986, *Test Methods for Evaluating Solid Waste: Physical/Chemical Methods*, SW-846, 3rd Edition, U.S. Environmental Protection Agency, Washington, D.C.

Merck & Co., Inc., 1989, *The Merck Index*, 11th ed., Rahway, New Jersey.

PNL, 1988, *Environmental Monitoring at Hanford for 1987*, PNL-6464, Pacific Northwest Laboratory, Richland, Washington.

WHC, 1989a, *Waste Stream Characterization Report*, WHC-EP-0287, Volumes 1 through 4, Westinghouse Hanford Company, Richland, Washington.

WHC, 1989b, *Environmental Compliance Manual*, WHC-CM-7-5, Westinghouse Hanford Company, Richland, Washington.

WHC, 1990a, *Liquid Effluent Study Project Plan*, WHC-EP-0275, Revision 2, Westinghouse Hanford Company, Richland, Washington.

WHC, 1990b, *Wastestream Designation for Liquid Effluent Analytical Data*, WHC-EP-0334, Westinghouse Hanford Company, Richland, Washington.

WHC, 1990c, *Liquid Effluent Study Characterization Data*, WHC-EP-0355, Westinghouse Hanford Company, Richland, Washington.

This page intentionally left blank.

9 1 1 1 7 5 1 3 1 6

# APPENDIX A

## PROCESS CHEMICALS, CHEMICAL STOCKS, MAINTENANCE CHEMICALS AND JANITORIAL SUPPLIES AND AEROSOLS

This page intentionally left blank.

Table A-1. Process Chemicals.

| Product | Components | Annual Usage | Source |
|---|---|---|---|
| Liquid Laboratory Cleaner | 0.7% Ammonia | 10-15 gal/yr | 222-S |
| Dearcide* 730 | 99% Trichloro-s-triazinetrione | Not Available | |
| Dearcide* 702 | 1.15% 5-Chloro-2-methyl-4-isothiazolin-3-one<br>0.35% 2-Methyl-4-isothiazolin-3-one<br><2% Magnesium chloride<br><3% Magnesium nitrate<br><96% Water | Not Available | 222-S |
| Poly Mate* 4690 | Not Available, Discontinued Product | Not Available | 222-S |
| Steamate* 2004 | <8% Diethylaminoethanol<br><8% Morpholine | None - addition to 222-S stream is planned | 222-S |
| Super Filmeen* 14 | "No Hazardous Ingredients" | Not Available | All Facilities Steam Condensate |

*Trademarks of W. R. Grace and Company, New York, New York.

Table A-2. 222-S Laboratory Chemical Stocks. (sheet 1 of 13)

| Chemical name | Number of containers | Total amount |
|---|---|---|
| Adipic Acid | 2 | 900 g |
| Agar | 1 | 400 g |
| Aluminum $C_{22}H_{23}N_3O_9$ | 1 | 100 g |
| Aluminum (powder) | 1 | 453 g |
| Aluminum (dust) | 1 | 453 g |
| Aluminum (granular) | 2 | 907 g |
| Aluminum (turnings) | 2 | 453 g |
| Aluminum fluoride (anhydrous) | 3 | 190 g |
| Aluminum hydroxide | 5 | 11,340 g |
| Aluminum (nickel alloy) | 1 | 55 g |
| Aluminum nitrate | 6 | 3,000 g |
| Aluminum oxide | 20 | 12,607 g |
| Aluminum potassium sulfate | 2 | 826 g |
| Aluminum sulfate | 1 | 453 g |
| p-Aminodimethylaniline sulfate | 1 | 100 g |
| Aminoquananidine-bicarbonate | 1 | 100 g |
| Aminoquananidine-sulfate | 1 | 100 g |
| Amino-2-naphthol-4-sulfonic acid | 1 | 100 g |
| Ammonium acetate | 1 | 500 g |
| Ammonium bicarbonate (Ammonium hydrogen carbonate) | 1 | 453 g |
| Ammonium borate (octahydrate) | 3 | 1,359 g |
| Ammonium carbonate | 6 | 2,059 g |
| Ammonium chloride | 5 | 1,995 g |
| Ammonium citrate (dibasic) | 2 | 846 g |
| Ammonium dichromate | 1 | 200 g |
| Ammonium fluoride | 4 | 2,000 g |
| Ammonium molybdate | 1 | 200 g |
| Ammonium nitrate | 20 | 11,604 g |
| Ammonium oxalate | 1 | 400 g |
| Ammonium persulfate | 1 | 5 lb |
| Ammonium phosphomolybdate reagen | 1 | 100 g |
| Ammonium phosphate (monobasic) | 4 | 1,814 g |
| Ammonium sulfate | 3 | 850 g |
| Ammonium thiocyanate | 1 | 500 g |
| Ammonium zirconium fluoride | 1 | 250 g |
| Arrowroot starch | 1 | 453 g |

Table A-2. 222-S Laboratory Chemical Stocks. (sheet 2 of 13)

| Chemical name | Number of containers | Total amount |
|---|---|---|
| Arsenazo I | 1 | 10 g |
| 1-(o-Arsonophenylazo)-2-naphthol-3,6-disulfonic acid disodium salt | 1 | 25 g |
| Ascarite ($SiO_2$ coated with NaOH) | 1 | 500 g |
| Ascorbic Acid Powder | 1 | 300 g |
| Barbituric acid | 1 | 100 g |
| Barium metal | 1 | 100 g |
| Barium carbonate | 1 | 75 g |
| Barium chloranilate | 1 | 25 g |
| Barium chloride | 2 | 11,340 g |
| Barium dioxide | 1 | 450 g |
| Barium diphenylamine sulfonate | 1 | 25 g |
| Barium hydroxide | 1 | 400 g |
| Barium nitrate | 3 | 1,359 g |
| Barium oxide | 1 | 453 g |
| Bentonite powder | 2 | 906 g |
| Benzenearsonic acid phenylarsonic acid | 1 | 25 g |
| Benzene tetracarboxylic acid pyromellitic acid | 1 | 100 g |
| Benzoinanti-oxime | 1 | 20 g |
| N,N-bis (3-Dimethylaminopropyl) dithiooxamide {Rubeanic Acid} | 1 | 20 g |
| Bismuth (metal) | 1 | 453 g |
| Bismuth nitrate | 6 | 2,459 g |
| Bismuth oxide | 4 | 1,800 g |
| Bismuth phosphate | 1 | 300 g |
| Boric acid | 2 | 700 g |
| Boron trioxide | 1 | 2,268 g |
| Brilliant, Creosyl Blue | 1 | 10 g |
| Bromo-p-nitrotoluene | 1 | 25 g |
| Calcium acetate | 1 | 450 g |
| Calcium carbide calcium acetylide ($CaC_2$) | 1 | 450 g |
| Calcium carbonate | 4 | 1,700 g |
| Calcium chloride (anhydrous) | 1 | 2,258 g |

Table A-2. 222-S Laboratory Chemical Stocks. (sheet 3 of 13)

| Chemical name | Number of containers | Total amount |
|---|---|---|
| Calcium chloride dihydrate | 3 | 2,564 g |
| Calcium cyanamide | 1 | 500 g |
| Calcium fluoride | 1 | 500 g |
| Calcium metasilicate | 1 | 2,000 g |
| Calcium nitrate | 2 | 550 g |
| Calcium oxalate | 1 | 400 g |
| Calcium stannate | 1 | 1,000 g |
| d-Camphoric acid | 1 | 100 g |
| Carboxymethyl-imino bis (ethylenedinitrilo) tetraacetic acid (DTPA) | 1 | 300 g |
| Ceric ammonium nitrate | 1 | 908 g |
| Ceric oxide | 2 | 700 g |
| Ceric sulfate (cerium sulfate) | 2 | 908 g |
| Cerium Chloride (cerous chloride) | 1 | 500 g |
| Cerium oxalate | 1 | 500 g |
| Cerous nitrate (cerium nitrate nonahydrate) | 11 | 1,180 g |
| Cesium carbonate | 6 | 12,040 g |
| Cesium chloride | 1 | 100 g |
| Cesium fluoride | 1 | 10 g |
| Cesium hydroxide | 1 | 250 g |
| Cesium iodide | 1 | 100 g |
| Cesium nitrate | 11 | 1,094 g |
| Cetyl pyridenium bromide | 1 | 100 g |
| Chloroacetic acid | 1 | 250 g |
| Chloroplatinic acid | 1 | 110 g |
| Chromium acetate | 1 | 450 g |
| Chromium nitrate | 2 | 700 g |
| Chromium sulfate | 1 | 50 g |
| Chromotropic acid (sodium salt) | 1 | 100 g |
| Citric acid (monohydrate) | 6 | 23,800 g |
| Citric acid (anhydrous) | 1 | 350 g |
| Cobalt (metal, 300 mesh) | 1 | 113 g |
| Cobaltous acetate | 1 | 450 g |
| Cobalt nitrate | 2 | 600 g |
| Copper (metal powder) | 1 | 180 g |
| Copper (metal turnings, shot) | 3 | 2,235 g |
| o-cresolphthalein complexone | 0 | 10 g |
| 18-crown-6 | 0 | 10 g |
| Coumarin | 1 | 100 g |

Table A-2. 222-S Laboratory Chemical Stocks. (sheet 4 of 13)

| Chemical name | Number of containers | Total amount |
|---|---|---|
| Cupric carbonate copper II | 1 | 450 g |
| Cupric chloride copper II | 2 | 900 g |
| Cupric nitrate | 3 | 230 g |
| Cupric sulfate | 8 | 3,625 g |
| 1,2-Cycloheptanedione (syn. Heptoxime) | 1 | 10 g |
| 1,2-Cyclohexanediaminetetraacetic acid CYDTA | 1 | 100 g |
| (1,2-Cyclohexylenedinitrilo)-tetraacetic acid | 2 | 190 g |
| Dextrose-glucose | 1 | 450 g |
| Devarda's Alloy (Al44-5%, Cu49-51%, Zn4-5%) | 2 | 900 g |
| 1,2-Diaminocyclohexane N,N,N',N'-tetraacetic monohydrate | 3 | 300 g |
| Diatomaceous earth | 2 | 4,310 g |
| 5,7-Dibromo-8-quinolinol | 1 | 100 g |
| Dicyclopentadien-1-yliron (Ferrocene) | 1 | 25 g |
| p-Dimethylaminobenzaldehyde | 1 | 100 g |
| 5-(p-[Dimethylamino]-benzylidene)-rhodanine | 1 | 10 g |
| N-(p-dimethylaminophenyl)-1,4 naphthoquinoneimine | 1 | 25 g |
| 3,3'-Dimethyl-1,1'-diphenyl-(4,4'-bi-2-pyrozoline-5,5'-d ione) | 5 | 150 g |
| N,N-Dimethyl-p-nitrosoaniline | 1 | 25 g |
| 3,5-Dinitrobenzoic acid | 1 | 65 g |
| Diphenylamine | 3 | 290 g |
| Diphenic acid | 1 | 75 g |
| 1,5-Diphenylcarbohydrazide | 1 | 100 g |
| 1,3-Diphenylguanidine | 1 | 100 g |
| Disodium dihydrogen ethylenediaminetetra-acetate dihydrate | 1 | 450 g |
| Disodium fumarate (fumaric acid, disodium salt) | 1 | 113 g |
| 2,5-Ditertrapentylhydroquinone | 1 | 500 g |
| 2,5-Ditertrabutylhydroquinone | 1 | 500 g |
| 2,5-Dithiobiurea | 1 | 25 g |
| Dithiooxamide | 1 | 75 g |
| Ethylenediamine Tetraacetic Acid (EDTA) | 2 | 1,200 g |

Table A-2. 222-S Laboratory Chemical Stocks. (sheet 5 of 13)

| Chemical name | Number of containers | Total amount |
|---|---|---|
| (Ethylenedinitrilo) tetraacetic acid disodium salt | 3 | 725 g |
| Ethylenediamine tetraacetic acid tetrasodium salt | 2 | 3,500 g |
| (Ethylenedinitrilo)tetraacetic acid ferric sodium salt | 1 | 1,000 g |
| EDTA tetrasodium salt (dihydrate) | 5 | 1,960 g |
| Ethyl p-hydroxybenzoate | 1 | 100 g |
| 1-Ethylquinolinium iodide | 1 | 100 g |
| Europium oxide | 1 | 3 g |
| Ferric ammonium sulfate | 11 | 5,300 g |
| Ferric chloride | 1 | 250 g |
| Ferric nitrate iron III | 15 | 6,654 g |
| Ferric oxide iron III | 4 | 1,800 g |
| Ferric sulfate | 8 | 8,750 g |
| Ferrous ammonium sulfate | 9 | 3,670 g |
| Ferrous sulfate iron II | 18 | 7,798 g |
| Ferrous sulfide iron II | 1 | 2,300 g |
| Formic acid (sodium salt) | 1 | 1,000 g |
| Fumaric acid | 1 | 500 g |
| Furil dioxime | 1 | 10 g |
| Gadolinium nitrate | 4 | 400 g |
| Gadolinium oxide | 1 | 100 g |
| Gallic acid | 1 | 100 g |
| Gallium ingot | 1 | 5 g |
| Gelatin (powder)-soluble collagen | 2 | 900 g |
| Gluconic acid (sodium salt) | 1 | 1,000 g |
| Glycerine 96% | 1 | 250 mL |
| Glycolic acid 70% | 1 | 500 g |
| Gum arabic acacia | 1 | 25 g |
| Hafnium oxynitrate | 1 | 1 g |
| Hexane | 0 | NA |
| Hydrobenzamide | 1 | 25 g |
| Hydroquinone | 1 | 100 g |
| Hydroxylamine hydrochloride | 4 | 1,515 g |
| N-hydroxyethylethylene diamine triacetic acid trisodium salt (HEDTA) | 1 | 100 g |
| N(2-hydroxyethyl)ethylenediamine triacetic acid trisodium salt dihydrate | 1 | 2,517 g |

Table A-2. 222-S Laboratory Chemical Stocks. (sheet 6 of 13)

| Chemical name | Number of containers | Total amount |
|---|---|---|
| N-(2-hydroxyethyl)ethylene-diaminetriacetic acid (HEDTA) | 4 | 1,800 g |
| Hydroxylammonium Sulfate | 1 | 250 g |
| 1-(1-Hydroxy-2-naphthylazo)-6-nitro-2-naphthol-4-sulfonic acid sodium salt | 1 | 100 g |
| p-(3-Hydroxy-3-phenyl-1-triazeno)-benzenesulfonic acid sodium salt | 1 | 10 g |
| Humic acid, technical | 1 | 2,000 g |
| Indigo | 1 | 100 g |
| Iodic acid | 3 | 650 g |
| Iron carbonate | 1 | 250 g |
| Iron (metal powder) | 1 | 1,360 g |
| Iron (metal lump) | 1 | 250 g |
| Itaconic acid | 1 | 450 g |
| Kaolin | 1 | 450 g |
| Lanthanum nitrate | 3 | 290 g |
| Lanthanum fluoride | 1 | 200 g |
| Lanthanum oxide | 2 | 900 g |
| Lanthanum rare earth carbonate (Ce<1%) octahydrate | 1 | 650 g |
| Lauric acid | 1 | 500 g |
| Lead (metal) | 1 | 500 g |
| Lead borate | 3 | 1,350 g |
| Lead chloride | 1 | 453.6 g |
| Lead dioxide | 1 | 450 g |
| Lead nitrate | 14 | 6,564 g |
| Lithium carbonate | 4 | 1,410 g |
| Lithium chloride | 3 | 1,362 g |
| Lithium fluoride | 4 | 1,815 g |
| Lithium hydroxide | 4 | 1,712 g |
| Lithium metaborate | 4 | 300 g |
| Lithium nitrate | 3 | 1,208 g |
| Magnesium chloride hexahydrate | 2 | 600 g |
| Magnesium fluoride | 12 | 5,340 g |
| Magnesium (metal) | 2 | 900 g |
| Magnesium nitrate | 2 | 800 g |
| Magnesium (powder) | 2 | 900 g |
| Magnesium sulfate (anhydrous) | 2 | 800 g |
| Magnesium trisilicate | 1 | 454 g |
| Malic acid | 1 | 250 g |

Table A-2. 222-S Laboratory Chemical Stocks. (sheet 7 of 13)

| Chemical name | Number of containers | Total amount |
|---|---|---|
| Manganese (metal) | 5 | 11,340 g |
| Manganese dioxide | 4 | 3,629 g |
| Manganese (II) nitrate (50%) | 13 | 6.473 L |
| Manganese (II,III) oxide | 1 | 2,000 g |
| Manganous chloride tetrahydrate | 1 | 100 g |
| Manganous sulfate | 1 | 500 g |
| Mercuric nitrate | 1 | 100 g |
| Mercuric acetate | 1 | 112 g |
| Mercuric chloranilate | 1 | 2 g |
| Mercuric chloride | 1 | 100 g |
| Mercuric oxide | 2 | 500 g |
| Mercurous chloride | 1 | 454 g |
| Mercurous nitrate | 1 | 400 g |
| Metal (Wood's Alloy\:Bi4Pb2SnCd) | 1 | 100 g |
| Methylene blue | 1 | 25 g |
| Methyl green | 1 | 25 g |
| 5-Methyl-4-nitroso-2-iso-propylphenol | 1 | 10 g |
| 3-Methyl-1-phenyl-2-pyrazolin-5-one | 1 | 50 g |
| 2-Methyllactic acid | 1 | 100 g |
| Methyl red | 1 | 25 g |
| 2-Methyl-8-quinolinol | 1 | 200 g |
| Molybdenum (metal powder) | 1 | 10 g |
| Molybdic acid | 2 | 804 g |
| Morin | 1 | 500 g |
| Myristic acid | 2 | 800 g |
| 1-Naphthol | 1 | 100 g |
| 1-Naphthol-4-sulfonic acid (sodium salt) | 1 | 100 g |
| Naphthalene | 1 | 100 g |
| N-1-Naphthylethylenediamine dihydrochloride | 1 | 100 g |
| Neodymium nitrate | 1 | 50 g |
| Neodymium oxide | 1 | 50 g |
| Nickel (metal) | 2 | 15 g |
| Nickel monoxide | 1 | 2,268 g |
| Nickel nitrate (hexahydrate) | 5 | 4,560 g |
| Nickelous sulfate (nickel II sulfate) hexahydrate | 2 | 850 g |
| 5-Nitrobarbituric acid | 1 | 50 g |
| 3-Nitrophthalic anhydride | 1 | 25 g |
| 1-Nitroso-2-naphthol-3,6-disulfonic acid disodium salt | 1 | 50 g |

Table A-2. 222-S Laboratory Chemical Stocks. (sheet 8 of 13)

| Chemical name | Number of containers | Total amount |
|---|---|---|
| N-Nitrosodibutylamine | 1 | 25 g |
| Oleic Acid | 1 | 600 g |
| Oxalic Acid (dihydrate) | 10 | 4,108 g |
| Palladium | 1 | 10 g |
| Palladium nitrate | 3 | 75 g |
| Palladium oxide | 1 | 100 g |
| Palmitic acid | 1 | 75 g |
| 2,4-Pentanedione dioxime | 1 | 10 g |
| 1,10-Phenanthroline | 3 | 15 g |
| 1,10-Phenanthroline ferrous sulfate Complex (0.025M solution Ferroin) | 1 | 1 oz |
| Phenolphthalein | 1 | 100 g |
| N-Phenylbenzohydromic acid | 1 | 10 g |
| p-Phenylenediamine | 2 | 200 g |
| N-Phenylmorpholine | 1 | 100 g |
| p-bis-2-2-Phenyloxazolylbenzene (POPOP) | 1 | 25 g |
| Phthalic anhydride | 1 | 500 g |
| 4-Phenylphenol | 1 | 1,000 g |
| Phosphoric Acid (anhydride) pentoxide | 1 | 125 g |
| Phosphotungstic acid, sodium salt | 13 | 5,384 g |
| Polyvinyl alcohol | 1 | 1 L |
| Potassium acetate | 3 | 1,362 g |
| Potassium antimonate | 1 | 500 g |
| Potassium biphthalate | 1 | 100 g |
| Potassium bisulfate | 1 | 350 g |
| Potassium bromate | 1 | 454 g |
| Potassium bromide | 1 | 454 g |
| Potassium carbonate (anhydrous) | 8 | 3,632 g |
| Potassium chlorate | 1 | 454 g |
| Potassium chloride | 5 | 2,253 g |
| Potassium chromate | 1 | 400 g |
| Potassium citrate | 1 | 200 g |
| Potassium cyanate | 1 | 454 g |
| Potassium cyanide | 2 | 500 g |
| Potassium dichromate | 11 | 4,939 g |
| Potassium ferricyanide (anhydrous) | 1 | 350 g |
| Potassium ferrocyanide (trihydrate) | 1 | 300 g |
| Potassium fluoride (anhydrous) | 6 | 2,608 g |
| Potassium fluoride (dihydrate) | 2 | 908 g |
| Potassium hydroxide | 9 | 6,755 g |

Table A-2. 222-S Laboratory Chemical Stocks. (sheet 9 of 13)

| Chemical name | Number of containers | Total amount |
|---|---|---|
| Potassium iodate | 1 | 400 g |
| Potassium iodide | 1 | 1,204 g |
| Potassium nitrate | 5 | 2,216 g |
| Potassium nitrite | 5 | 2,500 g |
| Potassium oxalate | 3 | 5,268 g |
| Potassium periodate | 1 | 25 g |
| Potassium permanganate | 16 | 7,010 g |
| Potassium persulfate | 11 | 5,400 g |
| Potassium phosphate (dibasic) | 4 | 1,816 g |
| Potassium phosphate (tribasic) | 2 | 800 g |
| Potassium acid phthalate | 2 | 200 g |
| Potassium pyrosulfate | 6 | 2,770 g |
| Potassium dulfate (anhydrous) | 4 | 5,600 g |
| Potassium tartrate | 1 | 454 g |
| Potassium sodium tatrate | 3 | 1,362 g |
| 3-(2-Pyridyl)-5,6-diphenyl-1,2, 4-triazine PDT | 1 | 100 g |
| 2-(2-Pyridylazo)-5-diethyl-aminophenol zinc chloride complex | 1 | 1 g |
| Pyrogallol red | 1 | 1 g |
| 1-Pyrrolidine carbodithioic acid (ammonium salt) | 2 | 50 g |
| Quinaldine red | 1 | 5 g |
| Quinalizarin | 1 | 25 g |
| Quinoline (also 8-Quinoline) [Oxide Hydrate] | 1 | 450 g |
| Rare earth carbonate $(La,Nd)(CO_3)_3$ | 1 | 230 g |
| Rare earth nitrate $(La,Nd)(NO_3)_3$ | 1 | 1,000 g |
| Rhodium oxide | 1 | 1 g |
| Rhodium trichloride | 2 | 1 g |
| Rubidium nitrate | 2 | 45 g |
| Ruthenium III chloride | 3 | 25 g |
| Ruthenium dioxide | 1 | 3 g |
| Ruthenium nitrate | 1 | 1 g |
| Ruthenium tetrachloride | 1 | 25 g |
| Salicylic acid | 2 | 908 g |
| Samarium nitrate (also Sm Trinitrate Hexahydrate) | 3 | 1,175 g |
| Samarium oxide | 1 | 100 g |
| Sand, sea (granular silica) | 6 | 3,000 g |
| Selenium chloride | 1 | 25 g |

Table A-2. 222-S Laboratory Chemical Stocks. (sheet 10 of 13)

| Chemical name | Number of containers | Total amount |
|---|---|---|
| Semicarbazide hydrochloride | 1 | 100 g |
| Silica (200 mesh) | 1 | 1,362 g |
| Silica (325 mesh) | 1 | 1,362 g |
| Silica gel (40-140 mesh) | 1 | 1,724 g |
| Silica gel Indicating (6-16 mesh) | 1 | 2,250 g |
| Silver iodate | 1 | 100 g |
| Silver iodide | 4 | 400 g |
| Silver nitrate | 4 | 325 g |
| Silver nitrite | 2 | 45 g |
| Silver oxide | 1 | 25 g |
| Soda lime | 1 | 2,330 g |
| Sodium (metal) | 1 | 454 g |
| Sodium acetate (trihydrate) | 2 | 554 g |
| Sodium aluminate | 6 | 14,528 g |
| Sodium azide | 1 | 300 g |
| Sodium benzoate | 1 | 500 g |
| Sodium bicarbonate | 13 | 5,494 g |
| Sodium bisulfate | 1 | 200 g |
| Sodium (meta) bisulfite | 4 | 1,404 g |
| Sodium bromate | 3 | 1,362 g |
| Sodium borate (tetrahydrate) | 1 | 453 g |
| Sodium borate (octahydrate) | 1 | 453 g |
| Sodium borohydride | 1 | 100 g |
| Sodium carbonate (anhydrous) | 12 | 5,570 g |
| Sodium carbonate (monohydrate) | 11 | 5,400 g |
| Sodium chloride | 10 | 8,024 g |
| Sodium citrate | 2 | 2,200 g |
| Sodium chromate | 8 | 5,088 g |
| Sodium cobaltinitrate | 1 | 100 g |
| Sodium cyanide | 3 | 600 g |
| Sodium dichromate | 6 | 2,724 g |
| Sodium dithionite | 1 | 90 g |
| Sodium ferricyanide | 1 | 500 g |
| Sodium fluoride | 5 | 1,858 g |
| Sodium fluorosilicate | 1 | 453.6 g |
| Sodium formaldehyde-sulfoxylate | 1 | 1,000 g |
| Sodium hydroxide | 4 | 6,400 g |
| Sodium iodide | 9 | 879 g |
| Sodium metaborate (anhydrous) | 1 | 4,540 g |
| Sodium metaborate (octahydrate) | 1 | 350 g |
| Sodium metabisulfate | 5 | 250 g |

Table A-2. 222-S Laboratory Chemical Stocks. (sheet 11 of 13)

| Chemical name | Number of containers | Total amount |
|---|---|---|
| Sodium molybdate | 1 | 450 g |
| Sodium nitrate | 13 | 28,576 g |
| Sodium nitrite | 6 | 13,550 g |
| Sodium nitroprusside | 1 | 100 g |
| Sodium oxalate (powder) | 2 | 750 g |
| Sodium peroxide | 2 | 600 g |
| Sodium persulfate | 1 | 400 g |
| Sodium phosphate (dibasic heptahydrate) | 10 | 4,032 g |
| Sodium phosphate (dibasic anhydrous) | 3 | 1,058 g |
| Sodium phosphate (monobasic) | 2 | 850 g |
| Sodium phosphate (tribasic, dodecahydrate) | 20 | 9,582 g |
| Sodium pyrophosphate (decahydrate) | 2 | 654 g |
| Sodium tripolyphosphate | 1 | 450 g |
| Sodium salicyate | 1 | 200 g |
| Sodium silicate (solution) | 1 | 2,268 g |
| Sodium (meta) silicate (pentahydrate) | 1 | 6,000 g |
| Sodium (meta) silicate (nonahydrate) | 2 | 4,536 g |
| Sodium stannate | 1 | 50 g |
| Sodium sulfate | 5 | 14,600 g |
| Sodium sulfite | 12 | 7,468 g |
| Sodium sulfide | 9 | 4,086 g |
| Sodium tartrate (dihydrate) | 5 | 6,362 g |
| Sodium tetraborate | 1 | 4,540 g |
| Sodium tetraborate (decahydrate) | 1 | 453.6 g |
| Sodium tetraphenylboron | 1 | 100 g |
| Sodium thiosulfate (pentahydrate) | 1 | 454 g |
| Sodium tungstate | 1 | 400 g |
| Stannic oxide (tin IV oxide) | 1 | 400 g |
| Stannous chloride (tin II chloride dihydrate) | 1 | 400 g |
| Starch (amylum) | 1 | 100 g |
| Stearic acid | 1 | 1,000 g |
| Strontium carbonate | 3 | 6,804 g |
| Strontium chloride (hexahydrate) | 6 | 2,616 g |
| Strontium fluoride | 1 | 1,000 g |
| Strontium nitrate | 6 | 1,618 g |
| Strontium titanate | 1 | 2,268 g |
| Succinic acid | 1 | 500 g |
| Sucrose | 1 | 3,500 g |

Table A-2. 222-S Laboratory Chemical Stocks. (sheet 12 of 13)

| Chemical name | Number of containers | Total amount |
|---|---|---|
| Sulfamic acid | 2 | 1,000 g |
| Sulfanilic acid | 8 | 3,632 g |
| Sulfosalicylic acid | 6 | 2,724 g |
| Sulfur | 2 | 754 g |
| Tannic acid | 1 | 1,000 g |
| Tantalum pentoxide (tantalum V oxide) | 1 | 15 g |
| Tellurium (metal powder) | 1 | 28 g |
| Tellurium dioxide (IV oxide) | 1 | 10 g |
| p-Terphenyl | 2 | 100 g |
| Tetrabutylammonium bromide | 1 | 100 g |
| 1-Tetradecanol | 1 | 25 g |
| Tetramethylammonium bromide | 1 | 400 g |
| Thallium(ic) oxide | 1 | 25 g |
| Thiocarbohydrazide | 1 | 25 g |
| Thyodene | 1 | 100 g |
| Tin (metal) | 3 | 470 g |
| Tin (metal foil) | 1 | 100 g |
| Tin fluoride | 1 | 50 g |
| Tin oxide IV | 1 | 400 g |
| Titanium dioxide (IV oxide) | 13 | 6,086 g |
| Trioctylphosphine oxide (TOPO) | 4 | 95 g |
| 2,4,6-Tripyridyl-s-triazine | 1 | 2 g |
| Tris-hydroxymethylaminomethane | 2 | 400 g |
| Tungstic acid | 1 | 28 g |
| Urea | 2 | 5,454 g |
| Vanadium chloride | 1 | 25 g |
| Vanadium pentoxide (V Oxide) | 1 | 400 g |
| Xylenol orange (tetrasodium salt) | 3 | 10 g |
| Yttrium nitrate | 1 | 25 g |
| Yttrium oxide | 1 | 75 g |
| Zinc (metal) | 7 | 3,178 g |
| Zinc (metal, mossy) | 1 | 454 g |
| Zinc acetate | 2 | 1,000 g |
| Zinc nitrate hexahydrate | 1 | 500 g |
| Zinc oxide | 1 | 04286 g |
| Zinc shot (scrap) | 1 | 20 g |
| Zinc sulfate (heptahydrate) | 1 | 200 g |
| Zirconium (metal) | 2 | 647 g |
| Zirconium oxide powder (-35+100 mesh) | 2 | 2,298 g |
| Zirconium oxide powder | 1 | 100 g |

Table A-2. 222-S Laboratory Chemical Stocks. (sheet 13 of 13)

| Chemical name | Number of containers | Total amount |
|---|---|---|
| Zirconium sulfate | 2 | 1,000 g |
| Zirconium tetrafluoride | 1 | 250 g |
| Zirconium phosphate | 1 | 100 g |
| Zirconyl nitrate | 3 | 450 g |

Table A-3. 222-SA Laboratory Chemical Stock. (sheet 1 of 3)

| Chemical name | Number of containers | Total amount |
|---|---|---|
| Acetic acid, glacial | 1 | 500 mL |
| Agar | 1 | 5,000 g |
| Ethyl alcohol | 1 | 250 mL |
| Methyl alcohol (anhydrous) | 1 | 300 mL |
| Aluminum (granular) | 1 | 450 g |
| Aluminum (shot) | 2 | 4,000 g |
| Aluminum nitrate (nonahydrate) | 8 | 4,000 g |
| Aluminum sulfate | 1 | 500 g |
| Ammonium bicarbonate | 1 | 453 g |
| Ammonium carbonate | 1 | 300 g |
| Ammonium citrate (dibasic) | 1 | 5,000 g |
| Ammonium fluoride | 1 | 250 g |
| Ammonium nitrate | 3 | 1,500 g |
| Ammonium oxalate | 1 | 300 g |
| Ascarite II ($SiO_2$ coated with NaOH) | 1 | 500 g |
| Ascorbic acid | 2 | 400 g |
| Barium chloride | 1 | 300 g |
| Barium nitrate | 2 | 1,000 g |
| Bismuth phosphate | 3 | 1,500 g |
| Boric acid | 1 | 200 g |
| Calcium carbonate | 1 | 300 g |
| Calcium chloride | 1 | 400 g |
| Calcium fluoride | 1 | 250 g |
| Calcium hydroxide | 2 | 600 g |
| Calcium nitrate | 2 | 600 g |
| Carbon tetrachloride | 1 | 30 mL |
| Cesium nitrate | 4 | 400 g |
| Chromic acid | 1 | NA |
| Chromium nitrate | 1 | 300 g |
| Citric acid | 2 | 500 g |
| Cobalt chloride | 1 | 200 g |
| Cupric nitrate | 1 | 100 g |
| Diatomaceous earth | 1 | 100 g |
| 5-(4-Dimethylaminobenzilidene) -rhodanine | 1 | 10 g |
| Dowex 1-X8, Dowex-1-chloride | 1 | 450 g |
| EDTA (acid form) | 6 | 2,400 g |
| EDTA disodium | 3 | 150 g |
| EDTA tetrasodium | 2 | 1,500 g |
| Ferric nitrate (iron III) | 1 | 500 g |
| Ferric oxide (iron III) | 2 | 800 g |

Table A-3. 222-SA Laboratory Chemical Stock. (sheet 2 of 3)

| Chemical name | Number of containers | Total amount |
|---|---|---|
| Ferric sulfate | 1 | 100 g |
| Ferrous sulfate (Iron II) | 1 | 100 g |
| Fluorescein | 1 | 500 g |
| Fluorescein disodium salt, 2-hydrate | 2 | 1,000 g |
| Glycolic acid | 2 | 350 g |
| Hexane (HPLC grade) | 1 | 100 mL |
| Hydrofluoric acid 48% | 2 | NA |
| Hydroxylamine hydrochloride | 4 | 1,700 g |
| HEDTA trisodium salt | 1 | 1,500 g |
| Iminodiacetic acid | 1 | 400 g |
| Iodine | 1 | 500 g |
| Iron (metal) | 1 | 500 g |
| Lanthanum nitrate (hexahydrate) | 3 | 1,200 g |
| Lead nitrate | 8 | 4,000 g |
| Lithium metaborate | 1 | 500 g |
| Magnesium hydroxide | 3 | 700 g |
| Magnesium nitrate (hexahydrate) | 1 | 300 g |
| Magnesium sulfate (anhydrous) | 1 | 500 g |
| Manganese II nitrate 50% | 1 | 300 g |
| Marble ($CaCO_3$ chips) | 1 | 500 g |
| Mercury | 2 | 235 mL |
| Mercury indicator | 1 | 100 g |
| Mercurous nitrate | 1 | 200 g |
| Methyl isobutyl ketone (hexone) | 1 | 250 mL |
| Methyl red | 1 | 25 g |
| Molybdenum trioxide (VI oxide) | 1 | 170 g |
| Nickel nitrate | 1 | 100 g |
| Nitrilotriacetic acid (trisodium) | 1 | 500 g |
| Nitroethane | 2 | 6,000 g |
| Normal paraffin hydrocarbon | 1 | 50 mL |
| Oxalic acid | 1 | 10 g |
| Potassium chromate | 1 | 12 g |
| Potassium fluoride | 4 | 1,600 g |
| Potassium hydroxide | 2 | 600 g |
| Potassium iodide | 1 | 100 g |
| Potassium nitrate | 3 | 1,200 g |
| potassium nitrite | 1 | 300 g |
| Potassium permanganate | 2 | 700 g |
| Potassium acid phthalate | 1 | 100 g |
| Rare earth nitrate $(La,Nd)(NO_3)_3$ | 1 | 250 g |
| Silica gel | 1 | 500 g |

Table A-3. 222-SA Laboratory Chemical Stock. (sheet 3 of 3)

| Chemical name | Number of containers | Total amount |
|---|---|---|
| Silicic acid, N-hydrate | 1 | 400 g |
| Soda & Lime ($Na_2CO_3$ & CaO) | 1 | 2,500 g |
| Sodium acetate (trihydrate) | 3 | 5,500 g |
| Sodium aluminate | 1 | 1,500 g |
| Sodium borate (tetraborate, decahydrate) | 1 | 500 g |
| Sodium carbonate | 2 | 600 g |
| Sodium chloride | 1 | 2,500 g |
| Sodium chloride | 1 | 200 g |
| Sodium citrate | 3 | 1,500 g |
| Sodium chromate | 1 | 400 g |
| Sodium fluoride | 1 | 250 g |
| Sodium hydroxide | 2 | 800 g |
| Sodium iodide | 1 | 250 g |
| Sodium Meta-bisulfate | 2 | 1,000 g |
| Sodium nitrate | 1 | 2,500 g |
| Sodium nitrite | 2 | 193 kg |
| Sodium phosphate (dibasic, anhydrous) | 3 | 1,500 g |
| Sodium phosphate (monobasic) | 1 | 300 g |
| Sodium phosphate (tribasic, dodecahydrate) | 2 | 500 g |
| Sodium sulfate | 2 | 2,600 g |
| Sodium sulfite | 1 | 500 g |
| Sodium sulfide, 9-hydrate | 1 | 500 g |
| Sodium tartrate | 2 | 1,000 g |
| Sodium thiosulfate | 1 | 500 g |
| Starch (amylum) | 2 | 500 g |
| Strontium fluoride | 1 | 500 g |
| Sucrose | 4 | 2,000 g |
| Sulfuric acid, ultrex | 1 | NA |
| Tributylphosphate (TBP) | 1 | 50 mL |
| 1,1,2-Trichlorotrifluoroethane | 2 | 2 L |
| Triethanolamine | 1 | 500 g |
| Tris(hydroxymethyl)aminoethane | 1 | 300 g |
| Urea | 1 | 500 g |
| Vanadyl sulfate trihydrate | 2 | 50 g |
| p-Xylene | 1 | 1 L |
| Zinc acetate | NA | NA |
| Zinc metal | 1 | 500 g |
| Zinc chloride | 1 | 50 mL |
| Zirconium nitrate | 1 | 200 g |

Table A-4. 222-SA Chemical Inventory by Common Name. (sheet 1 of 35)

| REC. | COMMON NAME | FORMULA | CAS NUMBER | MSDS # | CLASSIFICATION | C | P | MATRIX | LOCATION | UNITS/SIZE | TOTAL |
|---|---|---|---|---|---|---|---|---|---|---|---|
| 17 | ACETIC ACID | HC2H3O2 | 64-19-7 | 1003 | CORROSIVE | | | | HD 4 | 10250 ML | 250 ML |
| 578 | ACETIC ACID GLACIAL | CH3COOH | 64-19-7 | 1003 | CORROSIVE FLAMM | | | | CAB 2 UNDER SINK | 68500 ML | 4000 ML |
| 53 | ACETONE | CH3COCH3 | 67-64-1 | 1005 | FLAMMABLE | | | | CAB 24-3 | 68800 ML | 4500 ML |
| 63 | ACETONE | CH3COCH3 | 67-64-1 | 1005 | FLAMMABLE | | | | CAB 19-2 | 701 QT. | 7 QUARTS |
| 678 | ACETONE (FOR HOEHP) | CH3COCH3 | 67-64-1 | 1005 | FLAMMABLE | | | | CAB 20-4 | 101 GAL | 1 GALLON |
| 263 | ACETONITRILE | CH3CN | 75-05-8 | 1006 | FLAMMABLE POISO | Y | | | CAB 24-1 | 68 4 LITER | 24 LITER |
| 652 | ACETONITRILE | CH3CN | 75-05-8 | 1006 | FLAMMABLE POISO | Y | | | CAB 19-5 | 284 LITER | 8 LITERS |
| 1132 | ACETONITRILE | CH3CN | 75-05-8 | 1006 | FLAMMABLE POISO | Y | | | CAB 24-3 | 284 LITER | 8 LITER |
| 1313 | ACETONITRILE | CH3CN | 75-05-8 | 1006 | FLAMM POIS CORR | Y | | | 68 | 684000 ML | 24000 ML |
| 1372 | ALCOHOL | C2H5OH | 64-17-5 | 1184 | FLAMMABLE | | | | BUCK TOP BY DENSITY METER | 1820 ML | 20 ML |
| 631 | ALIQUAT 336 | CH3N((CH2)7CH3)3CL | 5137-55-3 | 1737 | FLAMMABLE POISO | | | | CAB 19-1 | 501 LITER | 5 LITERS |
| 1555 | ALIQUAT 336 IN XYLENE 15% | | | | FLAMMABLE | | | | CAB 24-1 | 38250 ML | 750 ML |
| 1119 | ALIZARIN COMPLEXONE | | 3952-78-1 | 1907 | | | | | CAB 13-1 | 205 GM / 101 GM | 11 GM |
| 1318 | ALIZARIN RED S SODIUM ALIZARIN SULFONATE 0.5% | C14H8O4 | 130-22-3 | 3096 | | | | | CAB 37 ARCHIVE | 18100 ML | 100 ML |
| 1121 | ALIZARIN YELLOW R | HO2C6H4N:NC6H4OHSCO OHO | 2243-76-7 | 2634 | | | | | CAB 13-1 | 1810 GM | 10 GM |
| 1120 | ALIZARINE RED S | C14H8O4 | 130-22-3 | 3096 | | | | | CAB 13-1 | 18100 GM | 100 GM |
| 426 | ALKALINE HYPOCHLORITE | | | | | | | | CAB 37 ARCHIVE | 18500 ML | 500 ML |
| 1118 | ALPHA NAPHTHOL BENZEIN INDICATOR | | 6948-88-5 | 1012 | | | | | CAB 13-1 | 1825 GM | 25 GM |
| 799 | ALUMINUM | AL | 7647-01-0 | | CORROSIVE | | | 10% HCL | CAB 23-3 | 1850 ML | 50 ML |
| 835 | ALUMINUM | AL | | | CORROSIVE | | | 2% HNO3 | CAB 23-4 | 28500 ML | 1000 ML |
| 881 | ALUMINUM | AL | | | CORROSIVE | | | 2% HNO3 | CAB 22-3 | 18500 ML | 500 ML |
| 1658 | ALUMINUM | AL | | | | | | | CAB 23-3 | 1850 ML | 50 ML |
| 796 | ALUMINUM (DISKS) | AL | 7429-90-5 | 1014 | FLAMMABLE | | | | CAB 7-1 | 10137.2 GM | 137.2 GM |
| 786 | ALUMINUM 3 | AL3 | | | | | | | CAB 37 ARCHIVE | 68100 ML | 600 ML |
| 82 | ALUMINUM CHLORIDE | ALCL3-6H2O | 7784-13-6 | 2930 | CORROSIVE | | | | CAB 2-1 | 18500 GM | 500 GM |
| 158 | ALUMINUM CHLORIDE | ALCL3-6H2O | 7784-13-6 | 2930 | CORROSIVE | | | | CAB 2-8 | 98500 GM | 4500 GM |
| 1122 | ALUMINUM CHLORIDE | ALCL3 | 7446-70-0 | 1016 | CORROSIVE | | | | CAB 36 ARCHIVE | 58500 GM | 2500 GM |
| 1519 | ALUMINUM CYCLOHEXANEBUTYRATE | AL(O2C10H17)2OH | 38598-34-4 | | | | | | 74 | 185 GM | 5 GM |
| 705 | ALUMINUM GRANULAR | AL | 7429-90-5 | 1014 | FLAMMABLE | | | | CAB 7-1 | 1852.4 GM | 52.4 GM |
| 83 | ALUMINUM NITRATE | AL(NO3)3-9H2O | 7784-27-2 | 1018 | OXIDIZER | | | | CAB 2-1 | 148500 GM | 7000 GM |
| 384 | ALUMINUM NITRATE | AL(NO3)3-9H2O | 7784-27-2 | 1018 | OXIDIZER | | | | CAB 8-2 | 28500 GM | 1000 GM |
| 1032 | ALUMINUM NITRATE | AL(NO3)3-9H2O | 7784-27-2 | 1018 | OXIDIZER | | | | DESC 9 | 1825 GM | 25 GM |
| 1123 | ALUMINUM NITRATE | AL(NO3)3-9H2O | 7784-27-2 | 1018 | OXIDIZER | | | | CAB 31-1 | 188500 GM | 9000 GM |
| 377 | ALUMINUM OXIDE | AL2O3 | 1344-28-1 | 1019 | | | | | CAB 8-1 | 18500 GM | 500 GM |
| 689 | ALUMINUM OXIDE | AL2O3 | 1344-28-1 | 1019 | | | | | CAB 36 ARCHIVE | 185 GM | 5 GM |
| 383 | ALUMINUM PURIFIED | AL | 7429-90-5 | 1014 | FLAMMABLE | | | | CAB 36 ARCHIVE | 18500 GM | 500 GM |
| 382 | ALUMINUM PURIFIED (POWDER) | AL | 7429-90-5 | 1014 | FLAMMABLE | | | | CAB 7-1 | 18500 GM | |
| 212 | ALUMINUM SULFATE | AL2(SO4)3-18H2O | 7784-31-8 | 1022 | OXIDIZER | | | | CAB 2-2 | 68500 GM | 4000 GM |
| 213 | ALUMINUM SULFATE | AL2(SO4)3-16H2O | 7784-31-8 | 1022 | OXIDIZER | | | | CAB 2-1 | 158 500 GM | 7500 GM |
| 386 | ALUMINUM SULFATE | AL2(SO4)3-18H2O | 7784-31-8 | 1022 | | | | | CAB 8-2 | 18500 GM | 1500 GM |
| 1126 | ALUMINUM SULFATE | AL2(SO4)3-16H2O | 7784-31-8 | 1022 | | | | | CAB 31-1 | 28500 GM | 1000 GM |
| 704 | ALUMINUM WIRE | AL | 7429-90-5 | 1014 | FLAMMABLE | | | | CAB 7-1 | 1849 GM / 18.3 GM | 49.3 GM |
| 707 | ALUMINUM WIRE | AL | 7429-90-5 | 1014 | FLAMMABLE | | | | CAB 7-1 | 6852.5GM / 2821.4 GM | 432.8 GM |
| 739 | ALUMINUM WIRE | AL | 7429-90-5 | 1014 | FLAMMABLE | | | | CAB 7-3 | 28454 GM | 908 GM |
| 1180 | AMADAC-F | | | 1727 | CORROSIVE | | | | CAB 13-1 | 1850 GM | 50 GM |
| 450 | AMBERLYST | | 37339-85-0 | 15011 | | | | | CAB 37 ARCHIVE | 18125 ML | 125 ML |
| 1559 | AMINO-2-2-HYDROXYMETHYL.-1.3-PROPANEDIOL | NH2C(CH2OH)3 | 77-86-1 | 1910 | | | | | CAB 6-1 | 18500 GM | 500 GM |
| 1182 | AMINO-4-4-CHLORODIPHENYL HYDRACHLORIC | C12H10ClN | | | | | | | CAB 13-1 | 481 GM | 4 GM |
| 1183 | AMINO-8-2-NAPHTHALENE SULFONIC ACID | H2NC10H6SO3H | 119-28-8 | 1023 | | | | | CAB 13-1 | 18100 GM | 100 GM |

Table A-4. 222-SA Chemical Inventory by Common Name. (sheet 2 of 35)

| | | | | | | | | | | |
|---|---|---|---|---|---|---|---|---|---|---|
| 1124 | AMMONIUM THIOCYANATE | NH4SCN | 1762-95-4 | 1810 | | | | CAB 36 ARCHIVE | 10500 GM | 500 GM |
| 84 | AMMONIUM ACETATE | CH3COONH4 | 631-61-8 | 1026 | FLAMMABLE | | | CAB 2-2 | 178500 GM | 8500 GM |
| 387 | AMMONIUM ACETATE | CH3COONH4 | 631-61-8 | 1026 | FLAMMABLE | | | CAB 8-2 | 30500 GM | 1500 GM |
| 85 | AMMONIUM BIFLUORIDE | NH4F-HF | 1341-49-7 | 1027 | POISON CORROSIV | | | CAB 36 ARCHIVE | 20500 GM | 1000 GM |
| 86 | AMMONIUM BISULFATE | NH4HSO4 | 7803-63-6 | 2571 | POISON CORROSIV | | | CAB 36 ARCHIVE | 10100 GM / 10500 GM | 600 GM |
| 1041 | AMMONIUM CALIB STOCK | NH4 | | | | | | FRIG IN LAB DOOR BOTTOM | 10100 ML | 100 ML |
| 87 | AMMONIUM CARBONATE | NH4CO3 | 10361-29-2 | 1028 | | | | CAB 36 ARCHIVE | 2 @ 500 GM | 1000 GM |
| 137 | AMMONIUM CARBONATE | NH4CO3 | 10361-29-2 | 1028 | | | | CAB 2-8 | 101 KG | 1 KG |
| 979 | AMMONIUM CARBONATE | NH4CO3 | 10361-29-2 | 1028 | | | | DESC 3 | 105 GM | 5 GM |
| 139 | AMMONIUM CHLORIDE | NH4CL | 12125-02-9 | 1772 | | | | CAB 2-8 | 101 KG | 1 KG |
| 215 | AMMONIUM CHLORIDE | NH4CL | 12125-02-9 | 1772 | CORROSIVE | | | CAB 2-3 | 200500 GM | 10000 GM |
| 1022 | AMMONIUM CHLORIDE | NH4CL | 12125-02-9 | 1772 | | | | DESC 7 | 1050 GM | 50 GM |
| 1162 | AMMONIUM CHLORIDE | NH4CL | 12125-02-9 | 1772 | | | | CAB 31-3 | 10500 GM | 500 GM |
| 1518 | AMMONIUM CHLOROMOBITE | (NH4)3RHCL6-1 1/2H2O | | | | | | 74 | 2010 GM | 20 GM |
| 216 | AMMONIUM CITRATE | (NH4)2HC6H5O7 | 3012-65-5 | 1600 | OXIDIZER | | | CAB 2-4 | 150500 GM | 7500 GM |
| 388 | AMMONIUM CITRATE | (NH4)2HC6H5O7 | 3012-65-5 | 1600 | OXIDIZER | | | CAB 8-2 | 10500 GM | 500 GM |
| 928 | AMMONIUM CITRATE | (NH4)2HC6H5O7 | 3012-65-5 | 1600 | OXIDIZER | | | CAB 36 ARCHIVE | 10500 GM | 500 GM |
| 81 | AMMONIUM FLUORIDE | NH4F | 12125-01-8 | 1029 | CORROSIVE | | | RM 6 FLOOR | 602.5 KG | 15 KG |
| 389 | AMMONIUM FLUORIDE | NH4F | 12125-01-8 | 1029 | CORROSIVE | | | CAB 8-2 | 10500 GM | 500 GM |
| 1520 | AMMONIUM HEXAFLUOROTANTALATE(V) | NH4TAF6 | 33300-11-9 | | CORROSIVE | | | 74 | 10250 GM | 250 GM |
| 1521 | AMMONIUM HEXAFLUOROTITANATE | (NH4)2TIF6 | 16962-40-6 | | CORROSIVE | | | 74 | 10250 GM | 250 GM |
| 8[illegible] | AMMONIUM HYDROXIDE | NH4OH | 1336-21-6 | 1031 | CORROSIVE | | | [illegible] | 10250 ML | 250 ML |
| 1010 | AMMONIUM HYDROXIDE BUFFER | NH4OH | 1336-21-6 | 1031 | CORROSIVE | | | FRIG IN LAB DOOR BOTTOM | 10100 ML | 100 ML |
| 88 | AMMONIUM METAVANADATE | NH4VO3 | 7803-55-6 | 1678 | POISON | | | CAB 2-4 | 30125 GM | 375 GM |
| 89 | AMMONIUM MOLYBDATE | (NH4)6MO7O24-4H2O | 12027-67-7 | 1032 | | | | CAB 2-4 | 40500 GM | 2000 GM |
| 1165 | AMMONIUM MOLYBDATE | (NH4)6MO7O24-4H2O | 12027-67-7 | 1032 | | | | CAB 31-1 | 10500 GM | 500 GM |
| 90 | AMMONIUM NITRATE | NH4NO3 | 6484-52-2 | 1033 | OXIDIZER | | | CAB 2-4 | 90500 GM | 4500 GM |
| 555 | AMMONIUM NITRATE | NH4NO3 | 6484-52-2 | 1033 | OXIDIZER | | | CAB 8-3 | 10500 GM | 500 GM |
| 91 | AMMONIUM OXALATE | (NH4)2C2O4-H2O | 6009-70-7 | 2730 | POISON CORROSIV | | | CAB 2-5 | 70500 GM | 3500 GM |
| 397 | AMMONIUM OXALATE | (NH4)2C2O4-H2O | 6009-70-7 | 2730 | POISON CORROSIV | | | CAB 8-3 | 10500 GM | 500 GM |
| 603 | AMMONIUM OXALATE | (NH4)2C2O4-H2O | 6009-70-7 | 2730 | POISON CORROSIV | | | CNTR N END | 101 LITER | 1 LITER |
| 92 | AMMONIUM PERSULFATE | (NH4)2S2O8 | 7727-54-0 | 1477 | CORROSIVE OXIDI | | | CAB 2-5 | 20500 GM | 1000 GM |
| 94 | AMMONIUM PHOSPHATE | (NH4)2HPO4 | 7783-28-0 | 1030 | | | | CAB 36 ARCHIVE | 10500 GM | 500 GM |
| 140 | AMMONIUM PHOSPHATE | NH4H2PO4 | 7722-76-1 | 1035 | | | | CAB 2-8 | 102.268 KG | 2.268 KG |
| 93 | AMMONIUM SULFATE | (NH4)2SO4 | 7783-20-2 | 1808 | | | | CAB 2-5 | 70500 GM | 3500 GM |
| 227 | AMMONIUM THIOCYANATE | NH4SCN | 1762-95-4 | 1810 | POISON | | | CAB 2-5 | 80500 GM | 4000 GM |
| 770 | AMMONIUM THIOCYANATE | NH4SCN | 1762-95-4 | 1810 | POISON | | | CAB 37 ARCHIVE | 20100 ML | 200 ML |
| 1556 | AMMONIUM THIOCYANATE | NH4SCN | 1762-95-4 | 1810 | POISON | | | CAB 31-3 | 10500 GM | 500 GM |
| 95 | AMMONIUM ZIRCONIUM FLUORIDE | ZR(NH4)2F6 | 16919-31-6 | | | | | CAB 2-5 | 20200 GM | 400 GM |
| 1552 | AMPOULES PM | | | | | | | 146 | 10020 ML | 200 ML |
| 624 | AMYLACETATE | CH3COOC5H11 | 628-63-7 | 1036 | FLAMMABLE | | | CAB 19-1 | 110500 ML | 5500 ML |
| 575 | ANTIMONY | SB | 7440-36-0 | 1982 | POISON | | | CAB 12-2 | 40125 GM | 500 GM |
| 563 | ANTIMONY | SB | 7440-36-0 | 1982 | CORROSIVE | | 50% HCL | CAB 23-3 | 1050 ML | 50 ML |
| 760 | ANTIMONY POWDER | SB | 7440-36-0 | 1982 | POISON | | | CAB 7-4 | 20125 GM / 10453 GM | 570 GM |
| 1186 | ARSENAZO III | C22H18O14N4S2AS2 | 1668-00-4 | 1931 | POISON | | | CAB 13-1 | 305 GM / 6010 GM | 75 GM |
| 444 | ARSENIC | AS | 7440-38-2 | 1930 | POISON | Y Y | H2SO4 | CAB 37 ARCHIVE | 2050 ML | 100 ML |
| 880 | ARSENIC | AS | 7440-38-2 | 1930 | POISON | Y | 2% HNO3 | CAB 22-3 | 10500 ML | 500 ML |
| 1069 | ARSENIC | AS | 7440-38-2 | 1930 | POISON | Y Y | 15% HCL | CAB 27-3 | 2050 ML | 100 ML |
| 501 | ARSENIC OXIDE V | AS2O5 | 1303-28-2 | 1752 | POISON | Y Y | | CAB 12-4 | 1025 GM | 25 GM |
| 500 | ARSENIC OXIDE III | AS2O3 | 1327-53-3 | 2231 | POISON | Y Y | | CAB 12-4 | 10100 GM | 100 GM |

Table A-4. 222-SA Chemical Inventory by Common Name. (sheet 3 of 35)

| REC. | COMMON NAME | FORMULA | CAS NUMBER | MSDS # | CLASSIFICATION | C | P | MATRIX | LOCATION | UNITS/SIZE | TOTAL |
|---|---|---|---|---|---|---|---|---|---|---|---|
| 503 | ARSENIC OXIDE TRIOXIDE | AS2O3 | 1327-53-3 | 2231 | POISON | Y | Y | | CAB 12-4 | 1050 GM | 50 GM |
| 1300 | ARSENIC TRIOXIDE | (AS2O3) | 1327-53-3 | 2231 | POISON | Y | | | CAB 13-4 | 6825 GM | 150 GM |
| 954 | ARSENIOUS OXIDE | AS2O3 | 1327-53-3 | 2231 | POISON | Y | | | DESC 1 | 1825 GM | 25 GM |
| 1380 | ARSENIOUS OXIDE | AS2O3 | 1327-53-3 | 2231 | POISON | Y | | | DES 11 DENSITY BNCH TOP | 1810 GM | 10 GM |
| 1448 | ASCARITE | | 81133-20-2 | | POISON CORROSIV | Y | | | CAB 33-6 | 28500 GM | 1000 GM |
| 7 | ASCORBIC ACID | C6H8O6 | 50-81-7 | 1045 | | | | | BNCH TOP | 281.25 GM | 2.5 GM |
| 96 | ASCORBIC ACID | C6H8O6 | 50-81-7 | 1045 | | | | | CAB 2-5 | 78500 GM | 3500 GM |
| 210 | ASCORBIC ACID | C6H8O6 | 50-81-7 | 1045 | | | | | CAB 3-7 | 68500 GM | 3000 GMR |
| 582 | ASCORBIC ACID | C6H8O6 | 50-81-7 | 1045 | | | | | CAB 15 | 18500 GM | 500 GM |
| 1125 | ASCORBIC ACID | C6H8O6 | 50-81-7 | 1045 | | | | | CAB 31-1 | 28500 GM | 1000 GM |
| 1161 | ASCORBIC ACID | C6H8O6 | 50-81-7 | 1045 | | | | | CAB 31-3 | 18500 GM | 500 GM |
| 1408 | ASCORBIC ACID | C6H8O6 | 50-81-7 | 1045 | | | | 5% | CAB 34-4 | 882 GM | 16 GM |
| 536 | BAKING SODA | CNHNO3 | | | | | | | KITCHEN FRIG | 1816 OZ. | 16 OZ. |
| 97 | BARBITURIC ACID | C4H4N2O3 | 67-52-7 | 1783 | | | | | CAB 2-6 | 38100 GM | 300 GM |
| 1157 | BARBITURIC ACID | C4H4N2O3 | 67-52-7 | 1983 | | | | | CAB 31-3 | 18500 GM | 500 GM |
| 696 | BARIUM | BA | | | CORROSIVE | | | 2% HNO3 | CAB 37 ARCHIVE | 18500 ML | 500 ML |
| 764 | BARIUM | BA | | | CORROSIVE | | | 2% HCL | CAB 37 ARCHIVE | 18500 ML | 500 ML |
| 815 | BARIUM | BA | 7647-01-0 | | CORROSIVE | | | 10% HCL | CAB 23-3 | 1850 ML | 50 ML |
| 836 | BARIUM | BA | | | CORROSIVE | | | 2% HNO3 | CAB 23-4 | 28500 ML | 1000 ML |
| 883 | BARIUM | BA | | | CORROSIVE | | | 2% HNO3 | CAB 22-3 | 18500 ML | 500 ML |
| 1573 | BARIUM | BA | | | | | | | CAB 23-3 | 1850 ML | 50 ML |
| 101 | BARIUM ACETATE | BA(C2H3O2) | 543-80-6 | 1933 | | | | | CAB 36 ARCHIVE | 18100 GM | 100 GM |
| 99 | BARIUM CARBONATE | BACO3 | 513-77-9 | 1047 | POISON | | | | CAB 2-6 | 28500 GM | 1000 GM |
| 1013 | BARIUM CARBONATE | BACO3 | 513-77-9 | 1047 | POISON | | | | DESC 5 | 1825 GM | 25 GM |
| 98 | BARIUM CHLORIDE | BACL2-2H2O | 10361-37-2 | 1812 | POISON | | | | CAB 2-6 | 168 500 GM | 8000 GM |
| 420 | BARIUM CHLORIDE | BACL2-2H2O | 10361-37-2 | 1812 | POISON | | | | CAB 6-3 | 258500 GM | 14500 GM |
| 1319 | BARIUM CHLORIDE | BACL2-H2O | 10361-37-2 | 1812 | POISON | | | | CAB 37 ARCHIVE | 18100 ML | 100 ML |
| 530 | BARIUM CHLORIDE 10% | BACL2 | 10361-37-2 | 1812 | POISON | | | | CAB 17 | 1850 ML | 50 ML |
| 1001 | BARIUM CHLORIDE DIHYDRATE | BA(CL2-2H2O) | 10326-27-9 | 1755 | POISON | | | | DESC 4 | 1825 GM | 25 GM |
| 1523 | BARIUM CYCLOHEXANEBUTYRATE | BA(O2C10H17)2 | 62669-65-2 | | | | | | 74 | 105 GM | 5 GM |
| 1187 | BARIUM DIPHENYLAMINESULFONATE | BA(SO3C6H4NHC6H5 | 6211-24-1 | 1710 | | | | | CAB 13-1 | 2850 GM | 100 GM |
| 102 | BARIUM HYDROXIDE | (BA(OH)2-8H2O | 17194-00-2 | 2169 | POISON | | | | CAB 36 ARCHIVE | 28500 GM | 1000 GM |
| 100 | BARIUM IODATE | BA(IO3)2 | | | POISON | | | | CAB 2-6 | 28100 GM | 200 GM |
| 103 | BARIUM NITRATE | BA(NO3)2 | 10022-31-8 | 1049 | POISON OXIDIZER | | | | CAB 36 ARCHIVE | 18500 GM / 18250 | 750 GM |
| 1379 | BARIUM NITRATE | BA(NO3)2 | 10022-31-8 | 1049 | | | | | DES 11 DENSITY BNCH TOP | 18100 GM | 100 GM |
| 105 | BENZOIC ACID | C6H5COOH | 65-85-0 | 2009 | | | | | CAB 2-6 | 48125 GM | 500 GM |
| 989 | BENZOIC ACID | C6H5COOH | 65-85-0 | 2009 | | | | | DESC 3 | 1820 GM | 20 GM |
| 1120 | BENZOIC ACID | C6H5COOH | 65-85-0 | 2009 | | | | | CAB 31-1 | 181 LB | 1 LB |
| 1188 | BENZOIN ANTI-OXIME | C6H5CHCH(NOH)C6H5 | 441-38-3 | 1053 | | | | | CAB 13-1 | 2825 GM | 50 GM |
| 412 | BERYLLIUM | BE | | | | | | | CAB 23-3 | 1850 ML | 50 ML |
| 891 | BERYLLIUM | BE | | | CORROSIVE | | | 5% HNO3 | CAB 22-3 | 18500 ML | 500 ML |
| 1113 | BERYLLIUM | BE | | | CORROSIVE | | | 5% HNO3 | CAB 23-4 | 18500 ML | 500 ML |
| 104 | BERYLLIUM SULFATE | BESO4-4 H2O | 13510-49-1 | 2181 | POISON | Y | | | CAB 36 ARCHIVE | 1825 GM | 25 GM |
| 816 | BISMUTH | BI | 7697-37-2 | | CORROSIVE | | | 10% HNO3 | CAB 23-3 | 1850 ML | 50 ML |
| 854 | BISMUTH | BI | 7697-37-2 | | CORROSIVE | | | 10% HNO3 | CAB 23-4 | 18500 ML | 500 ML |
| 892 | BISMUTH | BI | 7697-37-2 | | CORROSIVE | | | 10% HNO3 | CAB 22-3 | 18500 ML | 500 ML |
| 763 | BISMUTH METAL | BI | 740-69-9 | 1658 | FLAMMABLE SOLID | | | | CAB 7-1 | 18100 GM / 1850 GM 453.6 GM | 603.6 GM |
| 107 | BISMUTH NITRATE | BI(NO3)-3H2O | 10035-06-0 | 2318 | OXIDIZ | | | | CAB 36 ARCHIVE | 18250 GM | 250 GM |
| 682 | BISMUTH OXIDE | BI2O3 | 1304-76-3 | 2165 | | | | | CAB 36 ARCHIVE | 182 GM | 2 GM |
| 108 | BISMUTH OXY CHLORIDE | BIOCL | 7787-59-9 | | | | | | CAB 2-6 | 18100 GM | 100 GM |

Table A-4. 222-SA Chemical Inventory by Common Name. (sheet 4 of 35)

| REC. | COMMON NAME | FORMULA | CAS NUMBER | MSDS # | CLASSIFICATION | C | P | MATRIX | LOCATION | UNITS/SIZE | TOTAL |
|---|---|---|---|---|---|---|---|---|---|---|---|
| 728 | BISMUTH ROSS | BI | 740-69-9 | 1658 | FLAMMABLE SOLID | | | | CAB 7-3 | 10250 GM | 250 GM |
| 106 | BISMUTH SUBNITRATE | B10NO3-6H2O | 10361-46-3 | 3057 | OXIDIZER | | | | CAB 36 ARCHIVE | 1050 GM | 50 GM |
| 109 | BISMUTH SULFATE | BI2S3 | | | POISON | | | | CAB 36 ARCHIVE | 10100 GM | 100 GM |
| 110 | BISMUTH TRICHLORIDE | BICL3 | | | | | | | CAB 36 ARCHIVE | 10100 GM | 100 GM |
| 1284 | BORAX | NA2B4O2-10H2O | | | | | | | CAB 13-4 | 3810 GM / 40100 GM | 430 GM |
| 111 | BORIC ACID | H3BO3 | 10043-35-3 | 1061 | | | | | CAB 2-6 | 68500 GM | 3500 GM |
| 112 | BORIC ACID | H3BO3 | 10043-35-3 | 1061 | | | | | CAB 2-7 | 78500 GM | 3500 GM |
| 1127 | BORIC ACID | H3BO3 | 10043-35-3 | 1061 | | | | | CAB 31-1 | 38500 GM | 1500 GM |
| 1406 | BORIC ACID | H3BO3 | 10043-35-3 | 1061 | | | | | CAB 34-3 | 50250 ML | 1250 ML |
| 19 | BORON | B | | | | | | TRACE HNO3 | CAB 23-4 | 10500 ML | 500 ML |
| 822 | BORON | B | | | | | | H2O | CAB 23-3 | 4050 ML | 200 ML |
| 877 | BORON | B | | | | | | H2O | CAB 22-2 | 10500 ML | 500 ML |
| 765 | BROMIDE STANDARD | BR | | | | | | | CAB 37 ARCHIVE | 10500 ML | 500 ML |
| 515 | BROMO2-(5-PYRIDYLAZO-2-5-(DIETHYLAMINO) PHENOL | | 14337-53-2 | | | | | | CAB 13-1 | 505 GM | 5 GM |
| 1096 | BROMOCRESOL GREEN | C21H14BR4O5S | 76-60-8 | 1986 | | | | | CAB 37 ARCHIVE | 10100 ML | 100 ML |
| 1189 | BROMOCRESOL GREEN | C21H14BR4O5S | 76-60-8 | 1986 | | | | | CAB 13-1 | 1015 GM / 1010 GM / 105 GM | 30 GM |
| 1281 | BROMOCRESOL GREEN | | 76-60-8 | 1986 | | | | | CAB 13-3 | 305 GM | 15 GM |
| 1212 | BROMOCRESOL PURPLE | C21H16BR2O5S | 115-40-2 | 1067 | | | | | CAB 13-1 | 301 GM 1010 GM | 13 GM |
| 1203 | BROMOCRESOL PURPLE | C21H16BR2O5S | 115-40-2 | 1067 | | | | | CAB 13-3 | 205 GM | 10 GM |
| 522 | BROMOFORM | CHBR3 | 75-25-2 | 1069 | POISON | | | | 61 | 9050 GM | 450 GM |
| 1090 | BROMOTHYMOL BLUE | C27H28BR2O5S | 76-59-5 | 3005 | | | | | CAB 37 ARCHIVE | 10250 ML / 10125 ML | 375 ML |
| 1190 | BROMOTHYMOL BLUE | C27H28BR2O5S | 76-59-5 | 3005 | | | | | CAB 13-1 | 405 GM | 20 GM |
| 1262 | BROMOTHYMOL BLUE | C27H28BR2O5S | 76-59-5 | 3005 | | | | | CAB 13-3 | 905 GM / 1010 GM | 55 GM |
| 1317 | BROMOTHYMOL BLUE IS | C27H28BR2O5S | 76-59-5 | 3005 | | | | 50% ETHANOL | CAB 36-6 | 10100 ML | 100 ML |
| 150 | BRUCINE SULFATE | (C23H26N2O4)2H2SO4-7 H2O | 5787-60-8 | 1704 | POISON | | | | CAB 2-7 | 1025 GM | 25 GM |
| 1509 | BUFFER CALIB. PH 4 | | | | | | | | CAB 26-3 | 03500 ML | 3000 ML |
| 1066 | BUFFER HARDNESS | | | | | | | | CAB 37 ARCHIVE | 101 LITER | 1 LITER |
| 1137 | BUFFER HARDNESS REAGENT | | | | | | | | CAB 36 ARCHIVE | 10500 GM | 500 GM |
| 1315 | BUFFER PH 1.6 | | | | | | | | CAB 37 ARCHIVE | 10100 ML | 100 ML |
| 1314 | BUFFER PH 10 | | | | | | | | CAB 37 | 30500 ML | 1500 ML |
| 1510 | BUFFER PH 10 | | | | | | | | CAB 26-3 | 70500 ML | 3500 ML |
| 504 | BUFFER PH 10 CALIB. | | | 12887 | | | | | CAB 16 | 10500 ML | 500 ML |
| 1316 | BUFFER PH 12.6 | | | | | | | | CAB 37 ARCHIVE | 10100 ML | 100 ML |
| 507 | BUFFER PH 4 | | | 12886 | | | | | CAB 16 | 40500 ML | 2000 ML |
| 1303 | BUFFER PH 4 | | | | | | | | CAB 37 ARCHIVE | 60500 ML | 3000 ML |
| 1312 | BUFFER PH 7 | | | | | | | | CAB 37 ARCHIVE | 30500 ML | 1500 ML |
| 1511 | BUFFER PH 7 | | | | | | | | CAB 26-3 | 50500 ML | 2500 ML |
| 8 | BUFFER SOL'N PH 10 | | | | | | | | CAB 33-1 | 50500 ML / 10100 ML | 2600 ML |
| 20 | BUFFER SOL'N PH 7 | | | | | | | | CAB 33-1 | 60500 ML | 3000 ML |
| 1549 | BUFFER TABLETS | | | | | | | | 146 | | |
| 1550 | BUFFER TABLETS | | | | | | | | 146 | | |
| 1036 | BUG SPRAY | | | | | | | | DOCK | 1013 OZ | 13 OZ |
| 1226 | C-FURILDIOXIME | (OCH:CHCH4C)(:NOH)C(:NOH)(C:CHCH:CHO) | 522-27-0 | 2864 | | | | | CAB 13-2 | 105 GM / 301 GM | 8 GM |
| 702 | CADMIUM | CD | 7440-43-9 | 2232 | POISON | Y | | | CAB 7-1 | 10453.6 GM | 453.6 GM |
| 818 | CADMIUM | CD | 7697-37-2 | | CORROSIVE | Y | | 10% HNO3 | CAB 23-3 | 1050 ML | 50 ML |
| 838 | CADMIUM | CD | 7697-37-2 | | CORROSIVE | Y | | 2% HNO3 | CAB 23-4 | 10500 ML | 500 ML |
| 885 | CADMIUM | CD | 7697-37-2 | | CORROSIVE | | | 2% HNO3 | CAB 22-3 | 10500 ML | 500 ML |
| 1003 | CADMIUM | | | | | | | H2O | CAB 23-3 | 1050 ML | 50 ML |

Table A-4. 222-SA Chemical Inventory by Common Name. (sheet 5 of 35)

| REC. | COMMON NAME | FORMULA | CAS NUMBER | NSDS # | CLASSIFICATION | C | P | MATRIX | LOCATION | UNITS/SIZE | TOTAL |
|---|---|---|---|---|---|---|---|---|---|---|---|
| 1347 | CADMIUM | CD | 7697-37-2 | | CORROSIVE | Y | | 2% HNO3 | CAB 37 ARCHIVE | 18500 ML | 500 ML |
| 116 | CADMIUM ACETATE | CH3(COO)2CD-2H20 | 5743-04-4 | | POISON | Y | | | CAB 2-7 | 18500 GM | 500 GM |
| 113 | CADMIUM CHLORIDE | CDCL2-2 1/2 H20 | 10108-64-2 | 1084 | POISON | Y | | | CAB 36 ARCHIVE | 18500 GM | 500 GM |
| 114 | CADMIUM IODIDE | CDI2 | 7790-80-9 | 2094 | POISON | Y | | | CAB 2-7 | 28125 GM | 250 GM |
| 701 | CADMIUM METAL MOSSY | CD | 7440-43-9 | 2232 | POISON | Y | | | CAB 7-1 | 1810 GM / 1840 GM | 50 GM |
| 392 | CADMIUM NITRATE | CD(NO3)2-4H20 | 10325-94-7 | 2320 | OXIDIZER | Y | | | CAB 8-3 | 18500 GM | 500 GM |
| 761 | CADMIUM POWDER | CD | 7440-43-9 | 2232 | POISON | Y | | | CAB 7-1 | 18100 GM / 4825 GM | 200 GM |
| 700 | CADMIUM SHOT TEARDROP | CD | 7440-43-9 | 2232 | POISON | Y | | | CAB 7-1 | 38100 GM / 6850 GM | 660 GM |
| 115 | CADMIUM SULFATE | 3CDSO4-8H20 | 10124-36-4 | | POISON | Y | | | CAB 2-7 | 18500 GM | 500 GM |
| 1207 | CALCEIN | | 1461-15-0 | 2369 | | | | | CAB 13-1 | 185.GM | 5 GM |
| 394 | CALCIUM | CA | | | | | | H20 | CAB 37 ARCHIVE | 18125 ML | 125 ML |
| 693 | CALCIUM | CA | | | CORROSIVE | | | 2% HNO3 | CAB 37 ARCHIVE | 28500 ML | 1000 ML |
| 783 | CALCIUM | CA | | | | | | | CAB 37 ARCHIVE | 38100 ML | 300 ML |
| 768 | CALCIUM | CA | | | CORROSIVE | | | 2% HCL | CAB 37 ARCHIVE | 18500 ML | 500 ML |
| 837 | CALCIUM | CA | | | CORROSIVE | | | 2% HNO3 | CAB 23-4 | 28500 ML | 1000 ML |
| 884 | CALCIUM | CA | | | CORROSIVE | | | 2% HNO3 | CAB 22-3 | 18500 ML | 500 ML |
| 1571 | CALCIUM | CA | 7647-01-0 | | CORROSIVE | | | 10% HCL | CAB 23-3 | 2850 ML | 100 ML |
| 1522 | CALCIUM 2-ETHYLHEXANOATE | CA(O2C8H15)2 | 136-51-6 | | | | | | 74 | 185 GM | 5 GM |
| 117 | CALCIUM CARBONATE | CACO3 | 471-34-1 | 1086 | | | | | CAB 2-7 | 78500 GM | 3500 GM |
| 118 | CALCIUM CARBONATE | CACO3 | 471-34-1 | 1086 | | | | | CAB 36 ARCHIVE | 18100 GM | 100 GM |
| 477 | CALCIUM CARBONATE | CACO3 | 471-34-1 | 1086 | | | | | CAB 12-2 | 68500 GM / 1825 GM | 3025 GM |
| 480 | CALCIUM CARBONATE | CACO3 | 471-34-1 | 1086 | | | | | DESC 1 | 18 KG | 5 KG |
| 983 | CALCIUM CARBONATE | CACO3 | 471-34-1 | 1086 | | | | | DESC 3 | 1820 GM / 1850 GM | 70 GM |
| 1524 | CALCIUM CARBONATE | CACO3 | 471-34-1 | 1086 | | | | | CAB 12-2 | 28100 GM | 200 GM |
| 390 | CALCIUM CHLORIDE | CACL2 | 10043-52-4 | 1087 | | | | | CAB 8-3 | 18500 GM | 500 GM |
| 421 | CALCIUM CHLORIDE | CACL2 | 10043-52-4 | 1087 | | | | | CAB 36 ARCHIVE | 382500 GM | 7500 GM |
| 1028 | CALCIUM CHLORIDE | CACL2 | 10043-52-4 | 1087 | | | | | DESC 8 | 1815 GM | 15 GM |
| 399 | CALCIUM FLUORIDE | CAF2 | 7789-75-5 | 1088 | | | | | CAB 8-4 | 18500 GM | 500 GM |
| 119 | CALCIUM HYDROXIDE | CA(OH)2 | 1305-62-0 | 1607 | CORROSIVE | | | | CAB 36 ARCHIVE | 18200 GM | 200 GM |
| 398 | CALCIUM NITRATE | CA(NO3)2-4H20 | 12477-34-4 | 1090 | OXIDIZER | | | | CAB 6-3 | 128500 GM | 6000 GM |
| 1030 | CALCIUM NITRATE | CA(NO3)2-4H20 | 12477-34-4 | 1090 | OXIDIZER | | | | DESC 9 | 1825 GM | 25 GM |
| 126 | CALCIUM OXIDE | CAO | 1305-78-8 | 2618 | | | | | CAB 36 ARCHIVE | 18500 GM / 165 GM | 505 GM |
| 121 | CALCIUM SULFATE | CASO4-2H20 | 7778-18-9 | 1091 | | | | | CAB 36 ARCHIVE | 18500 GM | 500 GM |
| 1206 | CALCOCHROME BLACK T | | | | | | | | CAB 13-1 | 18100 GM | 100 GM |
| 683 | CARBON TETRACHLORIDE | CCL4 | 56-23-5 | 1102 | POISON FLAMMABL | Y | Y | | CAB 20-5 | 484 LITERS | 16 LITERS |
| 1208 | CARMINIC ACID | C22H20O13 | 1260-17-9 | | | | | | CAB 13-1 | 2810 GM | 20 GM |
| 1062 | CDIMETHYLAMINO BENZYLDENE-RHODANINO-5 | C12H12N2S2O | | | FLAMMABLE | | | | CAB 27-3 | 18500 ML | 500 ML |
| 1156 | CEDTA | C6H16(NHCH2COH)2)2-N 2O | | | | | | | CAB 31-3 | 18100 GM | |
| 1367 | CERIC | CE | | | | | | H2SO4 1 N | 153 | 500 LITER | 40 LITER |
| 1368 | CERIC | CE | | | | | | .459 N | 153 | 100 LITER | 8 LITER |
| 73 | CERIC | CE | | | | | | .1 N H2SO4 | BNCH TOP BY DENSITY METER | 100 LITER | 8 LITER |
| 74 | CERIC | CE | | | | | | .1 N H2SO4 | BNCH TOP BY DENSITY METER | 18500 ML/18250 ML/1875 ML | 825 ML |
| 18 | CERIC AMMONIUM NITRATE | (NH4)2CE(NO3)6 | 16774-21-3 | 1109 | OXIDIZER | | | | CAB 2-8 | 128500 GM | 6000 GM |
| 60 | CERIC AMMONIUM NITRATE | (NH4)2CE(NO3)6) | 16774-21-3 | 1109 | OXIDIZER CORROS | | | | CAB 31-3 | 18500 GM | 500 GM |
| 72 | CERIC AMMONIUM SULFATE | CE(NH4)4(SO4)4-2H20 | 13840-04-5 | 1800 | | | | | CAB 36 ARCHIVE | 18500 GM | 500 GM |
| 14 | CERIC OXIDE | CEO2 | 1306-38-3 | 1112 | POISON | | | | CAB 12-5 | 185 GM | 5 GM |
| 13 | CERIC SULFATE | CE(SO4)4 | 13840-04-5 | 1113 | CORROSIVE OXIDI | | | | CAB 36 ARCHIVE | 28500 GM | 1000 GM |
| 10 | CERIC SULFATE SOL'N | H4CE(SO4)4 | | | | | | | CAB 22-5 | 481 GALLON | 4 GALLONS |
| 16 | CERIC SULFATE SOL'N | H4CE(SO4)4 | | | | | | | CAB 22-6 | 285 PTS | 10 PTS |

Table A-4. 222-SA Chemical Inventory by Common Name. (sheet 6 of 35)

| REC. | COMMON NAME | FORMULA | CAS NUMBER | HSDB # | CLASSIFICATION | C | P | MATRIX | LOCATION | UNITS/SIZE | TOTAL |
|---|---|---|---|---|---|---|---|---|---|---|---|
| 686 | CERIUM | CE | | | CORROSIVE | | | 2% HNO3 | CAB 37 ARCHIVE | 20500 ML | 1000 ML |
| 828 | CERIUM | CE | 7697-37-2 | | CORROSIVE | | | 10% HNO3 | CAB 23-3 | 1850 ML | 50 ML |
| 839 | CERIUM | CE | | | CORROSIVE | | | 2% HNO3 | CAB 23-4 | 18500 ML | 500 ML |
| 867 | CERIUM | CE | | | CORROSIVE | | | 10% HNO3 | CAB 23-4 | 18500 ML | 500 ML |
| 886 | CERIUM | CE | | | CORROSIVE | | | 10% HNO3 | CAB 22-3 | 18500 ML | 500 ML |
| 124 | CERIUM CHLORIDE | CECL2 | 7790-86-5 | 2166 | | | | | CAB 36 ARCHIVE | 18100 GM | 100 GM |
| 1129 | CERIUM NITRATE | CENO3 | 10294-41-4 | 1115 | OXIDIZER | | | | CAB 36 ARCHIVE | 2850 GM | 100 GM |
| 517 | CERIUM OXIDE | CEO2 | 1306-38-3 | 2249 | | | | | CAB 12-5 | 2850 GM | 100 GM |
| 692 | CERIUM OXIDE | CEO2 | 1306-38-3 | 2249 | | | | | CAB 36 ARCHIVE | 182 GM | 2 GM |
| 125 | CEROUS NITRATE | CE(NO3)3-6H2O | 10294-41-4 | 1115 | OXIDIZER | | | | CAB 2-7 | 128100 GM | 1200 GM |
| 400 | CEROUS NITRATE | CE(NO3)3-6H2O | 10294-41-4 | 1115 | OXIDIZER | | | | CAB 8-4 | 18100 GM | 100 GM |
| 1525 | CEROUS NITRATE | CE(NO3)3-6H2O | 10294-41-4 | 1115 | OXIDIZER | | | | CAB 36 ARCHIVE | 28125 GM | 250 GM |
| 401 | CERRIC AMMONIUM NITRATE | (NH4)2CE(NO3)6 | 16774-21-3 | 1109 | OXIDIZER | | | | CAB 8-4 | 18500 GM | 500 GM |
| 519 | CESIUM CARBONATE | CS2CO3 | 534-17-8 | 1748 | | | | | CAB 12-5 | 5850 GM / 2810 GM | 270 GM |
| 126 | CESIUM CHLORIDE | CSCL | 7647-17-8 | 1118 | CORROSIVE | | | | CAB 2-8 | 18100 GM | 100 GM |
| 476 | CESIUM CHLORIDE | CSCL | 7647-17-8 | 1118 | CORROSIVE | | | | CAB 12-2 | 128250 GM | 3000 GM |
| 967 | CESIUM CHLORIDE | CSCL | 7647-17-8 | 1118 | CORROSIVE | | | | DESC 2 | 1850 GM | 50 GM |
| 1130 | CESIUM CHLORIDE | CSCL | 7647-17-8 | 1118 | CORROSIVE | | | | CAB 31-1 | 18100 GM | 100 GM |
| 127 | CESIUM NITRATE | CSNO3 | 7789-18-6 | 2331 | OXIDIZER | | | | CAB 36 ARCHIVE | 18500 GM | 500 GM |
| 1902 | CESIUM NITRATE | CSNO3 | 7789-18-6 | 2331 | OXIDIZER | | | | DESC 4 | 185 GM | 5 GM |
| 929 | CHLORAMINE T | C7H7CLNO2SNA-3H2O | 127-65-1 | 1994 | | | | | CAB 36 ARCHIVE | 18250 GM | 250 GM |
| 128 | CHLORAMINE-T HYDRATE | C7H7CLNO2SNA-3H2O | 127-65-1 | 1994 | | | | | CAB 2-8 | 28100 GM | 200 GM |
| 142 | CHLORAMINE-T HYDRATE | C7H7CLNO2SNA-3H2O | 127-65-1 | 1994 | | | | | CAB 2-8 | 181 KG | 1 KG |
| 1213 | CHLORAMINE-T HYDRATE | C7H7CLNO2SNA-3H2O | 127-65-1 | 1994 | | | | | CAB 13-1 | 18100 GM / 1810 GM | 110 GM |
| 998 | CHLORIDE | CL | 7647-14-5 | 16511 | | | | | CAB 37 ARCHIVE | 128100 ML | 1200 ML |
| 1565 | CHLORIDE | CL | 7647-14-5 | 16511 | | | | | CAB 12-6 | 28100 ML | 200 ML |
| 795 | CHLORIDE STANDARD | NACL | 7647-14-5 | 16511 | | | | | CAB 37 ARCHIVE | 18500 ML | 500 ML |
| 684 | CHLOROFORM | (C2H5OH) | 67-66-3 | 1128 | FLAMMABLE POISO | | Y | | CAB 20-5 | 484 LITERS | 16 LITERS |
| 1209 | CHLOROPLATINIC ACID | H2PTCL6-6H2O | 16941-12-1 | 2321 | | | | | CAB 13-1 | 185 ML | 5 ML |
| 1210 | CHROME AZUROL S | 2,6-CL2C6H2-3-SO3HAC (:C6H2-4'-:O3'CH3-5' -COOHA)-CON'T COMMEN | 1667-99-8 | | | | | | CAB 13-1 | [illegible] GM | 100 GM |
| 789 | CHROMERGE | | | 10643 | POISON OXIDIZER | | | | CAB 37 ARCHIVE | 6825 ML | 150 ML |
| 690 | CHROMIUM | CR | | | | Y | | | CAB 37 ARCHIVE | 18125 ML | 125 ML |
| 698 | CHROMIUM | CR | | | CORROSIVE | Y | | 2% HNO3 | CAB 37 ARCHIVE | 18500 ML | 500 ML |
| 782 | CHROMIUM | CR | | | CORROSIVE | Y | | | CAB 37 ARCHIVE | 58100 ML | 500 ML |
| 804 | CHROMIUM | CR | 7647-01-0 | | CORROSIVE | Y | | 10% HCL | CAB 23-3 | 4850 ML | 200 ML |
| 887 | CHROMIUM | CR | | | CORROSIVE | Y | | 2% HNO3 | CAB 22-3 | 28500 ML | 1000 ML |
| 1047 | CHROMIUM | CR | | | | Y | | 2% HCL | CAB 37 ARCHIVE | 18500 ML | 500 ML |
| 1055 | CHROMIUM | CR | | | CORROSIVE | Y | | 2% HNO3 | CAB 27-1 | 18500 ML | 500 ML |
| 1205 | CHROMIUM | CR | | | CORROSIVE | Y | | 5% HNO3 | CAB 23-4 | 18500 ML | 500 ML |
| 1322 | CHROMIUM | CR | | | CORROSIVE | Y | | HNO3 | CAB 37 ARCHIVE | 18500 ML | 500 ML |
| 930 | CHROMIUM CHLORIDE | CRCL | 10049-05-5 | | | | | | CAB 36 ARCHIVE | 18500 GM | 500 GM |
| 129 | CHROMIUM NITRATE | CR(NO3)3-9H2O | 7789-02-8 | 1132 | OXIDIZER | Y | | | CAB 36 ARCHIVE | 28500 GM | 1000 GM |
| 402 | CHROMIUM NITRATE | CR(NO3)3-9H2O | 7789-02-8 | 1132 | OXIDIZER | Y | | | CAB 8-4 | 18500 GM | 500 GM |
| 1353 | CHROMIUM NITRATE | CRNO3 | 13548-38-4 | 1132 | | Y | | H2O | CAB 37 ARCHIVE | 18125 ML | 125 ML |
| 923 | CHROMIUM OXIDE | CRO3 | 1308-38-9 | 1133 | POISON | Y | | | CAB 36 ARCHIVE | 185 GM | 5 GM |
| 478 | CHROMIUM PELLETS | CR | 7440-47-3 | 1999 | | Y | | | CAB 7-4 | 48100 GM | 400 GM |
| 1044 | CHROMIUM WORKING STD. | CR | | | | Y | | | BNCH TOP | 181 LITER | 1 LITER |
| 130 | CITRIC ACID | HOC(COOH)(CH2COOH)2-H2O | 5949-29-1 | 2712 | | | | | CAB 3-1 | 18500 GM | 500 GM |

Table A-4. 222-SA Chemical Inventory by Common Name. (sheet 7 of 35)

| REC. | COMMON NAME | FORMULA | CAS NUMBER | NSDS # | CLASSIFICATION | C | P | MATRIX | LOCATION | UNITS/SIZE | TOTAL |
|---|---|---|---|---|---|---|---|---|---|---|---|
| 938 | CITRIC ACID | HOC(COOH)(CH2COOH)2-H2O | 5949-29-1 | 2712 | | | | | CAB 36 ARCHIVE | 102.5 KG | 2.5 KG |
| 1591 | CLEANER AIR FRESHNER | | | | | | | | CAB 21-7 | 1013 OZ. | 13 OZ. |
| 554 | CLEANER AIR FRESHNER | | | | | | | | STOCKROOM | 8013 OZ. | 104 OZ |
| 568 | CLEANER AIR FRESHNER | | | | | | | | WOMENS BATHROOM | 1013 OZ. | 13 OZ. |
| 532 | CLEANER AJAX | | | | | | | | CAB 32 | 1014 OZ. | 14 OZ. |
| 548 | CLEANER AJAX | | | | | | | | STOCKROOM | 3014 OZ. | 42 OZ. |
| 531 | CLEANER ALCONOX DETERGENT | | | 13539 | | | | | CAB 32 | 1025 LBS | 25 LBS |
| 541 | CLEANER ALL PURPOSE | | | | | | | | UNDER KITCHEN SINK | 101 QT. | 1 QT. |
| 542 | CLEANER ALL PURPOSE | | | | | | | | UNDER KITCHEN SINK | 101 QT. | 1 QT. |
| 1596 | CLEANER AND POLISH | | | | | | | | CAB 21-7 | 1014 OZ. | 14 OZ. |
| 557 | CLEANER BLUE BOWL CLEANER | | | | | | | | STOCKROOM | 201 QT. | 2 QT. |
| 567 | CLEANER BLUE BOWL CLEANER | | | | | | | | WOMENS BATHROOM | 101 QT. | 1 QT. |
| 564 | CLEANER BLUE CLEANER | | | | | | | | STOCKROOM | 101 QT. | 1 QT. |
| 539 | CLEANER BRASSO METAL POLISH | | | | COMBUSTIBLE | | | | UNDER KITCHEN SINK | 108 OZ. | 8 OZ. |
| 540 | CLEANER BRAVO WAX STRIPPER | | | | | | | | STOCKROOM | 1023 OZ. | 23 OZ. |
| 540 | CLEANER DETSOL DETERGENT SOLVENT | | | | | | | | UNDER KITCHEN SINK | 101 QT. | 1 QT. |
| 559 | CLEANER DISINFECTANT | | | | | | | | STOCKROOM | 101 GAL | 1 GAL |
| 543 | CLEANER EASY OFF OVEN CLEANER | | | | CORROSIVE POISO | | Y | | UNDER KITCHEN SINK | 208 OZ. | 16 OZ. |
| 547 | CLEANER EXPO WHITE BOARD | | | | | | | | OFFICE | 208 OZ. | 16 OZ. |
| 1595 | CLEANER FREON T-P35 SOLVENT | | | | | | | | CAB 21-7 | 1016 OZ. | 16 OZ. |
| 1597 | CLEANER FURNITURE CLEANER TASK MASTER | | | | | | | | CAB 21-7 | 2018 OZ./1014 OZ. | 50 OZ. |
| 559 | CLEANER FURNITURE POLISH | | | | | | | | STOCKROOM | 1018 OZ. | 18 OZ. |
| 551 | CLEANER FURNITURE POLISH | | | | | | | | STOCKROOM | 1019 OZ. | 19 OZ. |
| 555 | CLEANER GLASS | | | | | | | | STOCKROOM | 8019 OZ. | 152 OZ. |
| 565 | CLEANER GLASS | | | | | | | | STOCKROOM | 1019 OZ. | 19 OZ. |
| 1594 | CLEANER GLASS CLEANERS | | | | | | | | CAB 21-7 | 1019 OZ./1015 OZ./2019 OZ. | 72 OZ. |
| 546 | CLEANER HAND CREAM | | | | | | | | KITCHEN LOCKER | 108 OZ. | 8 OZ. |
| 1598 | CLEANER LIQUID | | | | | | | | CAB 21-7 | 10200 ML/10500 ML | 700 ML |
| 1599 | CLEANER LIQUID WAX | | | | | | | | CAB 21-7 | 101000 ML / 10500 ML | 1300 ML |
| 5 | CLEANER MICRO SOAP | | | | | | | | 143 | 20500 | 1000 ML |
| 592 | CLEANER MICRO SOAP | | | | | | | | CAB 17 | 10500 ML | 500 ML |
| 553 | CLEANER MINT AIR FRESHNER | | | | | | | | STOCKROOM | 3016 OZ. | 48 OZ. |
| 569 | CLEANER MINT AIR FRESHNER | | | | | | | | WOMENS BATHROOM | 1016 OZ. | 16 OZ. |
| 558 | CLEANER MISTY PINE | | | | | | | | STOCKROOM | 201 GAL | 2 GAL |
| 549 | CLEANER PINK CREAM | | | | | | | | STOCKROOM | 101 QT. | 1 QT. |
| 561 | CLEANER SPIC AND SPAN | | | | | | | | STOCKROOM | 1054 OZ. | 54 OZ. |
| 556 | CLEANER SUPER CLEAN BOWL CLEANER | | | | | | | | STOCKROOM | 201 QT. | 2 QT. |
| 538 | CLEANER SWEETHEART DISH SOAP | | | | | | | | UNDER KITCHEN SINK | 2022 OZ. | 44 OZ. |
| 552 | CLEANER TOTAL PERFORMANCE DEGREASER | | | | | | | | STOCKROOM | 301 QT. | 3 QTS |
| 1115 | CLEANER WHITE BOARD | | | | | | | | CAB 32-2 | 10250 ML | 250 ML |
| 634 | CNPO | C24H42NO2P | 8324-95-9 | 2556 | CORROSIVE | | | | CAB 19-2 | 101 LB | 1 LB |
| 635 | CNPO | C24H42NO2P | 8324-95-9 | 2556 | CORROSIVE | | | | CAB 19-2 | 10120 GM | 120 GM |
| 250 | CNPO .2M /1.4 TBP/NPH | | | | FLAMMABLE | | | | CAB 24-2 | 10250 ML | 250 ML |
| 411 | CNPO .32M / 1.4M TBP/NPH | | | | FLAMMABLE | | | | CAB 24-1 | 10250 ML | 250 ML |
| 817 | COBALT | CO | 7697-37-2 | | CORROSIVE | | | 10% HNO3 | CAB 23-3 | 1050 ML | 50 ML |
| 840 | COBALT | CO | | | CORROSIVE | | | 2% HNO3 | CAB 23-4 | 20500 ML | 1000 ML |
| 1027 | COBALT | CO | | | | | | | CAB 23-3 | 1050 ML | 50 ML |
| 131 | COBALT CHLORIDE | COCL2 | 7791-13-1 | 1137- | POISON | Y | | | CAB 36 ARCHIVE | 10100 GM | 100 GM |
| 1527 | COBALT CYCLOHEXANEBUTYRATE | CO(O2C10H17)2 | | | | | | | 74 | 105 GM | 5 GM |

Table A-4. 222-SA Chemical Inventory by Common Name. (sheet 8 of 35)

| REC. | COMMON NAME | FORMULA | CAS NUMBER | NSDS # | CLASSIFICATION | C | P | MATRIX | LOCATION | UNITS/SIZE | TOTAL |
|---|---|---|---|---|---|---|---|---|---|---|---|
| 762 | COBALT METAL | CO | 7440-48-4 | 2002 | FLAMMABLE | Y | | | CAB 7-4 | 10453 GM | 453 GM |
| 132 | COBALT NITRATE | CO(NO3)2-6H2O | 10026-22-9 | 2004 | OXIDIZER | Y | | | CAB 3-1 | 40250 GM | 1000 GM |
| 1350 | COBALT NITRATE | CONO3 | 10141-05-6 | 2003 | | | | H2O | CAB 37 ARCHIVE | 1025 ML | 25 ML |
| 931 | COBALTOUS CHLORIDE | COCL2 | 7646-79-9 | 2001 | | | | | CAB 36 ARCHIVE | 10100 GM | 100 GM |
| 32 | COLLODION | | 9004-70-0 | 2005 | FLAMMABLE POISO | | | | FRIG | 450100 ML | 4500 ML |
| 638 | COLLODION | | 9004-70-0 | 2005 | POISON FLAMMABL | | | | CAB 19-2 | 30500 ML | 1500 ML |
| 1404 | COMPLEXING AGENT | | | | | | | | CAB 34-3 | 40500 ML | 2000 ML |
| 1211 | CONGO RED | C32H22N6NA2O6S2 | 573-58-0 | 2006 | POISON | | | | CAB 13-1 | 2010 GM | 20 GM |
| 647 | COPPER | CU | | | CORROSIVE | | | 10% HNO3 | CAB 23-3 | 1050 ML | 50 ML |
| 781 | COPPER | CU | | | CORROSIVE | | | | CAB 37 ARCHIVE | 50100 ML | 500 ML |
| 841 | COPPER | CU | | | CORROSIVE | | | 2% HNO3 | CAB 23-4 | 20500 ML | 1000 ML |
| 876 | COPPER | CU | | | CORROSIVE | | | | CAB 37 ARCHIVE | 10500 ML | 500 ML |
| 343 | COPPER 2 | CU | | | CORROSIVE | | | H2SO4 | CAB 37 ARCHIVE | 101000 ML | 1000 ML |
| 1516 | COPPER CYCLOHEXANEBUTRATE | CU(O2C10H17)2 | | | | | | | 74 | 105 GM | 5 GM |
| 498 | COPPER IODIDE | CUI | 7681-65-4 | | | | | | CAB 12-4 | 10100 GM | 100 GM |
| 708 | COPPER NITRATE HYDRATE | CU(NO3)2 | 19004-19-4 | 1141 | OXIDIZER | | | | FRIG | 0025 GM | 200 GM |
| 1102 | COPPER STG | CU | | | CORROSIVE | | | | CAB 37 ARCHIVE | 10500 ML | 500 ML |
| 699 | COPPER WIRE | CU | 7440-50-8 | 2371 | | | | | CAB 7-1 | 1040 GM/1025GM/105GM/1020 GM | 90 GM |
| 743 | COPPER WIRE | CU | 7440-50-8 | 2371 | | | | | CAB 7-1 | 1010 GM (1.5 METERS) | 10 GM |
| 1091 | CRESOL PURPLE .1% | | 2302-01-7 | | | | | | CAB 37 ARCHIVE | 1050 ML | 50 ML |
| 1214 | CRESOL RED | C21H18O5S | 1733-12-6 | 2217 | | | | | CAB 13-1 | 105 GM / 1025 GM | 30 GM |
| 1231 | CRESOL-N PURPLE SODIUM SALT | C21H17NAO5S | 62625-31-4 | | | | | | CAB 13-2 | 1010 GM | 10 GM |
| 1200 | CRESOL-N PURPLE SODIUM SALT | C21H17NAO5S | 62625-31-4 | | | | | | CAB 13-3 | 2010 GM | 20 GM |
| 1215 | CRYSTAL VIOLET | | 548-62-9 | 2007 | POISON | | | | CAB 13-1 | 1025 GM | 25 GM |
| 40 | CUPFERRON | C6H5N(NO)ONH4 | 135-20-6 | 1673 | POISON | Y | | | FRIG | 10125 GM | 125 GM |
| 146 | CUPFERRON | C6H5N(NO)ONH4 | 135-20-6 | 1673 | POISON | Y | | | CAB 3-1 | 10100 GM | 100 GM |
| 1184 | CUPFERRON | C6H5N(NO)ONH4 | 135-20-6 | 1673 | POISON | Y | | | CAB 13-1 | 20100 GM | 200 GM |
| 133 | CUPRIC CARBONATE | CUCO3 | 1184-64-1 | 2010 | POISON | | | | CAB 36 ARCHIVE | 30500 GM | 1500 GM |
| 134 | CUPRIC CHLORIDE | CUCL2-2H2O | 7447-39-4 | 1672 | POISON | | | | CAB 36 ARCHIVE | 30500 GM | 1500 GM |
| 135 | CUPRIC CHLORIDE | CUCL2-2H2O | 7447-39-4 | 1672 | POISON | | | | CAB 3-1 | 10500 GM | 500 GM |
| 136 | CUPRIC NITRATE | CU(NO3)2-3H2O | 3251-23-8 | 1141 | POISON | | | | CAB 36 ARCHIVE | 10100 GM | 100 GM |
| 143 | CUPRIC SULFATE | CUSO4-5H2O | 7758-99-8 | 1143 | POISON | | | | CAB 36 ARCHIVE | 10500 GM | 500 GM |
| 145 | CUPRIC SULFATE | CUSO4-5H2O | 7758-99-8 | 1143 | POISON | | | | CAB 3-1 | 20500 GM | 1000 GM |
| 403 | CUPRIC SULFIDE | CUS | 1317-40-4 | 2879 | POISON | | | | CAB 36 ARCHIVE | 10500 GM | 500 GM |
| 1063 | CUPRIC SULFIDE | CUS | 1317-40-4 | 2879 | POISON | | | | DESC 5 | 10100 GM | 100 GM |
| 147 | CUPROUS CHLORIDE | CUCL | 7758-89-6 | 1757 | POISON | | | | CAB 36 ARCHIVE | 40500 GM | 2000 GM |
| 148 | CUPROUS OXIDE | CU2O | 1317-39-1 | 1144 | POISON | | | | CAB 3-1 | 10125 GM | 125 GM |
| 1577 | CYANIDE RINSE | KCN | | | POISON | | | | HD 3 | 20500 ML / 104 LITER | 5 LITER |
| 49 | CYCLOHEXANE | CH2(CH2)4CH2 | 110-82-7 | 1145 | FLAMMABLE | | | | CAB 24-1 | 404 LITER | 16 LITER |
| 653 | CYCLOHEXANE | CH2(CH2)4CH2 | 110-82-7 | 1145 | FLAMMABLE | | | | CAB 19-5 | 604 LITERS | 24 LITERS |
| 1515 | CYCLOHEXANE BUTRATE | | | | | | | | 74 | 105 GM | 5 GM |
| 1230 | D-MANNITOL | C6H14O6 | 69-65-8 | | | | | | CAB 13-2 | 10250 GM | 250 GM |
| 149 | DAVARDA'S ALLOY | | 8049-11-4 | 1971 | FLAMMABLE SOLID | | | | CAB 36 ARCHIVE | 10100 GM | 100 GM |
| 668 | DECANE | CH3(CH2)8CH3 | 124-18-5 | 1916 | | | | | CAB 20-3 | 10100 GM | 100 GM |
| 1227 | DEPTOXINE | | | | | | | | CAB 13-2 | 101 GM | 1 GM |
| 1216 | DESICOTE | | | | | | | | CAB 13-1 | 1050 ML | 50 ML |
| 675 | DI-(2-ETHYLHEXYL)PHOSPHORIC ACID | (CH3(CH2)3CH(C2H5)CH2O)2P(O)(OH) | 298-07-7 | | CORROSIVE | | | | CAB 20-4 | 102 KG /40500 GM | 11.5+2000GM |
| 1185 | DI-2-NAPHTHYLTHIOCARBAZONE | C10H7N:NCSHNNHC10H7 | | | | | | | CAB 13-1 | 1010 GM | 10 GM |
| 644 | DI-BUTYL BUTYL PHOSPHATE | C8H18PO4 | | | | | | | CAB 19-4 | 104 LITER | 4 LITER |

Table A-4. 222-SA Chemical Inventory by Common Name. (sheet 9 of 35)

| REC. | COMMON NAME | FORMULA | CAS NUMBER | HSDB # | CLASSIFICATION | C | P | MATRIX | LOCATION | UNITS/SIZE | TOTAL |
|---|---|---|---|---|---|---|---|---|---|---|---|
| 676 | DI-N-BUTYL-.N-DIETHYLCARBAMOYL PHOSPHONATE | (C4H9O)2P(O)CON(C2H5)2 | 7439-69-2 | | | | | | CAB 20-4 | 1 GALL | 1 GALLON |
| 1217 | DIAMINODIPHENYL SULFONE | (H2NC6H4)2SO2 | 80-08-0 | | | | | | CAB 13-1 | 10100 GM | 100 GM |
| 1200 | DICHLORO-INDOPHENOL SODIUM SALT 2.6 | O:C6H2CL2NC6H4OHNA | 620-45-1 | 1706 | | | | | CAB 13-1 | 1010 GM | 10 GM |
| 1191 | DICHLOROFLUORESCEIN | 2'.7'-HOCOC6H4C:C6H2-3':O-2'CLOC6H2-6'-OH-7'-CL | 76-54-0 | 1160 | | | | | CAB 13-1 | 105 GM | 5 GM |
| 1258 | DIETHYLAMINO-4-BENZALDEHYDE | (CH2H5)2NC6H4CHO | 120-21-8 | | | | | | CAB 13-3 | 50100 GM | |
| 1192 | DIETHYLDITHIOCARBAMIC ACID SODIUM SALT | (C2H5)2NCS2(H2N(C2H5)23 | 2391-78-8 | 1168 | | | | | CAB 13-1 | 20100 GM | 200 GM |
| 152 | DIETHYLENETRIAMINE PENTAACETIC ACID | (C23H26N2O4)2H2SO4-7 H2O | 67-43-6 | | | | | | CAB 3-1 | 20500 GM | 1000 GM |
| 674 | DIHEXYL DIETHYLCARBAMYLMETHYLENE PHOSPHONATE | (CH3(CH2)5O)2P(O)CH2CON(C2H5)2 | 7369-66-6 | | | | | | CAB 20-4 | 101 KG | 1 KG |
| 436 | DIHEXYL-N.N-DIETHYLCARBAMYLMETHYLENE PHOSPHONATE | (CH3(CH2)5O)2P(O)CH2CON(C2H5)2 | 7369-66-6 | | | | | | CAB 19-2 | 10500 ML | 500 ML |
| 153 | DIMETHYLGLYOXIME | CH3C:NOHC2NOHCH3 | 9545-45-4 | 2272 | | | | | CAB 36 ARCHIVE | 20500 GM | 1000 GM |
| 915 | DIMETHYLGLYOXIME | (CH3)2C2(NOH)2 | 9545-45-4 | 2272 | | | | | CAB 22-5 | 101 LITER | 1 LITER |
| 1195 | DIMETHYLGLYOXIME | (CH3)2C2(NOH)2 | 9545-45-4 | 2272 | | | | | CAB 13-1 | 10125 GM | 125 GM |
| 1196 | DIMETHYLGLYOXIME SODIUM SALT | (CH3)2C2(NONA)2-8H2O | | | | | | | CAB 13-1 | 10125 GM | 125 GM |
| 1194 | DIMETHYLOXALATE | CH3COOCH3 | 553-90-2 | 3224 | CORROSIVE | | | | CAB 13-1 | 10100 GM | 100 GM |
| 694 | DIONEX STOCK | | | | | | | | CAB 37 | 60250 ML | 1500 ML |
| 1053 | DIPHENOL-SULFONIC 1% | (C6H5)2SO3 | 127-63-9 | | | | | | CAB 37 ARCHIVE | 10100 ML | 100 ML |
| 1282 | DIPHENYL CARBAZIDE | C6H5NH.NH.CO.NH.NH.C6.H5 | 140-22-7 | | | | | | CAB 13-3 | 1025 GM | 25 GM |
| 1199 | DIPHENYL-1.-10-PHENANTHROLINE 4.7. | (C6H5)2C12H6N2 | 1662-01-7 | 1937 | | | | | CAB 13-1 | 201 GM | 2 GM |
| 1269 | DIPHENYL4.7-1.10-PHENANTHROLINE | | 1662-01-7 | | | | | | CAB 13-3 | 701 GM | 7 GM |
| 154 | DIPHENYLAMINE | (C6H5)2NH | 122-39-4 | 1176 | POISON | | Y | | CAB 36 ARCHIVE | 10500 GM | 500 GM |
| 1197 | DIPHENYLAMINE | (C6H5)2NH | 122-39-4 | 1176 | POISON | | Y | | CAB 13-1 | 20100 GM | 200 GM |
| 1159 | DIPHENYLCARBAZIDE | C6H5NHNHCONHNHC6H5 | 140-22-7 | 1724 | | | | | CAB 31-1 | 10100 GM | 100 GM |
| 1201 | DIPHENYLPROPANONE 1.3 | C6H5CH2COCH2C6H5 | 102-04-5 | | FLAMMABLE | | | | CAB 13-1 | 1010 GM | 10 GM |
| 1202 | DIPHENYLTHIO CARBAZONE | C6H5NHNHCSN=NC6H5 | 60-10-6 | 2023 | POISON | Y | | | CAB 13-1 | 1010 GM | 10 GM |
| 157 | DISODIUM DIHYDROGEN ETHELENEDIAMINE TETRAACETATE DIHYDRATE | (NaO2CCH2)2NCH4N(CH2CO2Na)2-2H2O | 6381-92-6 | 1180 | | | | | CAB 3-2 | 30500 GM | 1500 GM |
| 1367 | DISODIUM DIHYDROGEN ETHELENEDIAMINE TETRAACETATE DIHYDRATE | (NaO2CCH2)2NC2H4N(CH2CO2Na2)-2H2O | 6381-92-6 | 1180 | | | | | CAB 26-2 | 101 LB | 1 LB |
| 1294 | DISODIUM HYDROGEN PHOSPHATE | Na2HPO4 | 7558-79-4 | 1086 | CORROSIVE | | | | CAB 13-4 | 6050 GM | 400 GM |
| 1299 | DISODIUM HYDROGEN PHOSPHATE | Na2HPO4 | 7558-79-4 | 1086 | CORROSIVE | | | | CAB 13-4 | 60100 GM /102 GM | 602 GM |
| 1218 | DITHIZONE | C6H5NHNHCS-N-N-C6H5 | 60-10-6 | 2023 | POISON | Y | | | CAB 13-2 | 5010 GM | 50 GM |
| 391 | DRI FILM-SC | | | | | | | | CAB 37 ARCHIVE | 1050 ML | 50 ML |
| 1445 | DRIERITE | CaSO4 | 778-18-9 | 1091 | | | | | CAB 33-6 | 205 LB | 10 LB |
| 648 | DTPA | | | | FLAMMABLE | | | | CAB 19-4 | 201 LITER | 2 LITER |
| 1576 | DTPA NA-5 | | | | | | | | CAB 20-3 | 201 LITER | 2 LITER |
| 888 | DYPROSIUM | Dy | | | CORROSIVE | | | 2% HNO3 | CAB 22-3 | 20500 ML | 1000 ML |
| 1528 | DYSPROSIUM NITRATE | Dy(NO3)3-5H2O | 10031-49-9 | | | | | | 74 | 1025 GM/ 20100 GM | 225 GM |
| 1464 | DYSPROSIUM OXIDE | Dy2O3 | 1308-87-8 | | | | | | 74 | 2025 GM | 50 GM |
| 156 | EDTA | (HOCOCH2)2N(CH2CH2COOH)2 | 60-00-4 | 1206 | | | | | CAB 36 ARCHIVE | 40500 GM | 2000 GM |
| 596 | EGTA | Na2O8C10H14N2 | 6381-92-6 | 1180 | | | | | N CNTR | 10500 ML | 500 ML |

# Table A-4. 222-SA Chemical Inventory by Common Name. (sheet 10 of 35)

| REC. | COMMON NAME | FORMULA | CAS NUMBER | NSGS # | CLASSIFICATION | C | F | MATRIX | LOCATION | UNITS/SIZE | TOTAL |
|---|---|---|---|---|---|---|---|---|---|---|---|
| 1000 | EDTA | NA2H2C10H14N2 | 6381-92-6 | 1180 | | | | | DESC 4 | 1850 GM | 50 GM |
| 1531 | EDTA ACID FORM | (CH2COOH)4N2CH2 | 60-00-4 | 1206 | | | | | CAB 12-2 | 1825 GM | 25 GM |
| 375 | EDTA DISODIUM SALT | NA2H2C10H14N2-2H2O | 6381-92-6 | 1180 | | | | | GROUT CART RM A | 18500 GM | 500 GM |
| 379 | EDTA DISODIUM SALT DIHYDRATE CYRSTAL | HOCOCH2(NAOCOCH2)NCH2CH2N(CH2COONA)CH2COON-2H2O | 139-33-3 | 2786 | | | | | CAB 8-1 | 28500 GM | 1000 GM |
| 159 | EDTA MAGNESIUM DISODIUM SALT | C10H12N6H2NA2O8 | 14402-88-1 | | | | | | CAB 3-2 | 18500 GM | 500 GM |
| 941 | EDTA SOLUTION | (-CH2N(CH2CO2NA)CH2CO2H)2 | 6381-92-6 | 1180 | | | | | CAB 22-6 | 481000 ML | 4000 ML |
| 1304 | EDTA SOLUTION | (-CH2N(CH2CO2NA)CH2CO2H)2 | 6381-92-6 | 1180 | | | | | CAB 37 ARCHIVE | 181000 ML | 1000 ML |
| 1305 | EDTA SOLUTION | (-CH2N(CH2CO2NA)CH2CO2H)2 | 6381-92-6 | 1180 | CORROSIVE | | | | CAB 37 ARCHIVE | 28500 ML | 1000 ML |
| 158 | EDTA TETRASODIUM DIHYDRATE | (NAOCOCH2)2NCH2CH2N(CH2COONA)2-2H2O | 10378-23-1 | 2817 | | | | | CAB 3-2 | 38500 GM | 1500 GM |
| 160 | EDTA TRISODIUM SALT | C10H13N2NA3O8-3H2O | 85715-60-2 | 1206 | | | | | CAB 3-2 | 18500 GM | 500 GM |
| 1361 | ELECTRODE FILLING SOL'N ORION | | | | | | | | CAB 26-3 | 1850 ML | 50 ML |
| 1622 | EPA MATERIAL (MS378 CONC.3 ) | NO3/F- | | | | | | | CAB 21-4 | 1820 ML | 20 ML |
| 1627 | EPA MATERIAL TURBIDITY MS278 CONC. 1 | | | | | | | | CAB 21-4 | 2085 ML | 100 ML |
| 1637 | EPA MATERIAL WP384 CONC. 1 | | | | | | | | CAB 21-5 | 1820 ML / 5820 ML | 120 ML |
| 1636 | EPA MATERIAL WP384 CONC2 FM | | | | | | | | CAB 21-5 | 5820 ML /1820 ML | 120 ML |
| 1625 | EPA MATERIAL WP486 CONC 1 QC NUTRIENT | | | | | | | | CAB 21-4 | 1820 ML | 20 ML |
| 1626 | EPA MATERIAL WP486 CONC. 2 QC NUTRIEUT | | | | | | | | CAB 21-4 | 1820 ML | 20 ML |
| 1620 | EPA MATERIAL MS 378 CONC.10 | NO3/F- | | | | | | | CAB 21-4 | 7820 ML | 140 ML |
| 1621 | EPA MATERIAL MS378 CONC. 1 | NO3/F- | | | | | | | CAB 21-4 | 10820 ML | 200 ML |
| 1624 | EPA MATERIAL MS378 CONC. 2. | NO3/F- | | | | | | | CAB 21-4 | 1820 ML | 20 ML |
| 1623 | EPA MATERIAL MS378 CONC.5 | NO3/F- | | | | | | | CAB 21-4 | 1820 ML | 20 ML |
| 1619 | EPA QC ICP 7619 | | | | | | | | CAB 21-3 | 2820 ML | 40 ML |
| 139 | ERBIUM | ER | | | CORROSIVE | | | 2% HNO3 | CAB 22-3 | 28500 ML | 1000 ML |
| 1530 | ERBIUM NITRATE | ER(NO3)3-5H2O | 10031-51-3 | 2026 | | | | | 74 | 1825 GM | 25 GM |
| 1529 | ERBIUM OXIDE | ER2O3 | 12061-16-4 | 2026 | | | | | 74 | 2825 GM | 50 GM |
| 1223 | ERIOCHROME BLACK T | 1-HOC10H6-2N:N-4C10H4-3-OH-7-NO2-1-SO3HA | 1787-61-7 | 2225 | | | | | CAB 13-2 | 18100 GM / 1810 GM | 110 GM |
| 1092 | ERIOCHROME BLACK-T .4% | 1-HOC10H6-2N:N-4C10H4-3-OH-7-NO2-1-SO3NA | 1787-61-7 | 2225 | | | | | CAB 37 ARCHIVE | 18100 ML | 100 ML |
| 1221 | ERIOCHROME CYANINE R | C23H15NA3O9S | 3618-63-1 | | | | | | CAB 13-2 | 1825 GM | 25 GM |
| 1220 | ERYTHROSIN BLUEISH | C20H6I4NA2O5 | 568-63-8 | 1909 | | | | | CAB 13-2 | 1825 GM | 25 GM |
| 1219 | ERYTHROSIN YELLOWISH | C20H8I2NA2O5 | | | | | | | CAB 13-2 | 18100 GM | 100 GM |
| 1264 | ETHANEDIYLIDENEDINITRILO 2,2-DIPHENOL | HOC6H4N:CHCH:NC6H4OH | 1149-16-2 | | | | | | CAB 13-2 | 1810 GM | 10 GM |
| 50 | ETHYL ACHOHOL | C2H5OH | 64-17-5 | 1184 | FLAMMABLE | | | | CAB 24-1 | 341 PT | 3 PT |
| 1077 | ETHYL RED .170 | (CH3)2NC6H4N=N6H4CO2NA | 845-10-3 | 1347 | | | | 5% ETHANOL | CAB 37 ARCHIVE | 18100 ML | 100 ML |
| 665 | ETHYL-2-1-HEXANOL | CH3(CH2)3CH(CH2H5)CH2OH | 104-76-7 | 1194 | POISON | | | | CAB 20-3 | 281 KILO | 1 KILO |
| 870 | EUROPIUM | EU | | | CORROSIVE | | | 2% HNO3 | CAB 22-3 | 18500 ML | 500 ML |
| 1245 | EUROPIUM | EU | | | CORROSIVE | | | 2% HNO3 | CAB 23-4 | 18500 ML | 500 ML |
| 1532 | EUROPIUM CHLORIDE | EUCL3 | 13759-92-7 | | | | | | 74 | 1810 GM | 10 GM |
| 1467 | EUROPIUM OXIDE | EU2O3 | 1308-96-9 | | | | | | 74 | 1810 MG | 10 MG |
| 1261 | FAST SULPHON BLACK-F | | | | | | | | CAB 13-2 | 1810 GM | 10 GM |
| 42 | FERRIC AMMONIUM SULFATE | FENH4(SO4)2-12H2O | 10138-04-2 | 1210 | | | | | B7 | 1 @ 100 ML | 100 ML |

Table A-4. 222-SA Chemical Inventory by Common Name. (sheet 11 of 35)

| REC. | COMMON NAME | FORMULA | CAS NUMBER | NSGS # | CLASSIFICATION | C | P | MATRIX | LOCATION | UNITS/SIZE | TOTAL |
|---|---|---|---|---|---|---|---|---|---|---|---|
| 219 | FERRIC AMMONIUM SULFATE | FENH4(SO4)2-12H2O | 10138-04-2 | 1210 | | | | | CAB 3-2 | 58500 GM | 2500 GM |
| 404 | FERRIC AMMONIUM SULFATE | FENH4(SO4)2-12H2O | 10138-04-2 | 1210 | | | | | CAB 8-4 | 18500 GM | 500 GM |
| 1130 | FERRIC AMMONIUM SULFATE | FENH4(SO4)2 | 10138-04-2 | 1210 | | | | | CAB 31-2 | 18500 GM | 500 GM |
| 220 | FERRIC CHLORIDE | FECL3-6H2O | 10025-77-1 | 1211 | CORROSIVE | | | | CAB 3-3 | 28500 GM | 1000 GM |
| 406 | FERRIC CHLORIDE | FECL3-6H2O | 10025-77-1 | 1211 | CORROSIVE | | | | CAB 8-4 | 18500 GM | 500 GM |
| 1135 | FERRIC CHLORIDE | FECL3 | 7705-08-0 | 1211 | CORROSIVE | | | | CAB 31-2 | 38500 GM | 1500 GM |
| 1533 | FERRIC CYCLOHEXANEBUTYRATE | | | | | | | | 74 | 185 GM | 5 GM |
| 161 | FERRIC NITRATE | FE(NO3)3-9H2O | 10421-48-4 | 1214 | OXIDIZER | | | | CAB 3-2 | 148500 GM | 7000 GM |
| 405 | FERRIC NITRATE | FE(NO3)3-9H2O | 10421-48-4 | 1214 | OXIDIZER | | | | CAB 8-4 | 28500 GM | 1000 GM |
| 1136 | FERRIC NITRATE | FE(NO3)3-9H2O | 10421-48-4 | 1214 | OXIDIZER | | | | CAB 31-2 | 68500 GM | 3000 GM |
| 162 | FERRIC OXIDE | FE2O3 | 1309-37-1 | 1666 | OXIDIZER | Y | | | CAB 3-3 | 18500 GM | 500 GM |
| 994 | FERRIC OXIDE | FE2O3 | 1309-37-1 | 1666 | OXIDIZER | Y | | | DESC 4 | 1850 GM | 50 GM |
| 1651 | FERRIC OXIDE | FE2O3 | 1309-37-1 | 1666 | OXIDIZER | Y | | | CAB 36 ARCHIVE | 18500 GM | 500 GM |
| 1106 | FERROIN INDICATOR | (C12H8N2)2FESO4 | 7783-85-9 | 1217 | | | | | CAB 27-4 | 484 OZ. | 16 OZ. |
| 163 | FERROUS AMMONIUM SULFATE | FE(NH4)2(SO4)2-6H2O | 7783-85-9 | 1217 | | | | | CAB 3-3 | 118500 GM | 5500 GM |
| 408 | FERROUS AMMONIUM SULFATE | FE(NH4)2(SO4)2-6H2O | 7783-85-9 | 1217 | | | | | CAB 8-4 | 28500 GM | 1000 GM |
| 1224 | FERROUS ETHYLENEDIAMINE SULFATE | FEC2H4(NH3)2(SO4)2-4 H2O | | | | | | | CAB 13-2 | 18200 GM | 200 GM |
| 1225 | FERROUS ETHYLENEDIAMMONIUM SULFATE | FEC2H4(NH3)2(SO4)2-4 H2O | | | | | | | CAB 13-2 | 18113 GM | 113 GM |
| 26 | FERROUS SULFAMATE | | | 1228 | | | | | FRIG | 12825 ML | 300 ML |
| 1038 | FERROUS SULFAMATE | | | 1228 | | | | | FRIG | 281000 ML | 2000 ML |
| 164 | FERROUS SULFATE | FE(SO4)3-7H2O | 7782-63-0 | 1219 | | | | | CAB 3-3 | 128500 GM / 481 KG | 10 KG |
| 407 | FERROUS SULFATE | FESO4-7H2O | 7782-63-0 | 1219 | | | | | CAB 8-4 | 18500 GM | 500 GM |
| 1163 | FERROUS SULFATE | FESO4-7H2O | 7782-63-0 | 1219 | | | | | CAB 31-2 | 18500 GM / 181000 GM | 1500 GM |
| 1564 | FLUORIDE (SODIUM) | NAF | 7681-49-4 | 1491 | POISON | | | | CAB 12-4 | 28100 ML | 200 ML |
| 529 | FLUORIDE STANDARD (SODIUM) | NAF | 7681-49-4 | 1491 | POISON | | | | CAB 37 ARCHIVE | 38500 ML | 1500 ML |
| 975 | FORMIC ACID | HCO2HA | 141-53-7 | 1226 | CORROSIVE | | | | DESC 3 | 185 GM | 5 GM |
| 165 | FUROIC ACID | C5H4O3 | 88-14-2 | | | | | | CAB 36 ARCHIVE | 18500 GM | 500 GM |
| 697 | GADOLINIUM | GD | | | CORROSIVE | | | 2% HNO3 | CAB 37 ARCHIVE | 28500 ML | 1000 ML |
| 865 | GADOLINIUM | GD | 7647-01-0 | | CORROSIVE | | | 10% HCL | CAB 23-3 | 2850 ML | 100 ML |
| 894 | GADOLINIUM | GD | | | CORROSIVE | | | 5% HNO3 | CAB 22-3 | 18500 ML | 500 ML |
| 1534 | GADOLINIUM CHLORIDE | GDCL3-6H2O | 13450-84-8 | | | | | | 74 | 1825 GM | 25 GM |
| 1536 | GADOLINIUM NITRATE | GD(NO3)3-5H2O | 52788-53-1 | 3295 | | | | | 74 | 18100 GM | 100 GM |
| 1535 | GADOLINIUM OXIDE | GD2O3 | 12064-62-9 | 1229 | | | | | 74 | 18100 GM / 1825 GM | 125 GM |
| 1537 | GERMANIUM POWDER | GE | 7440-56-4 | 3356 | FLAMMABLE | | | | 74 | 1810 GM | 10 GM |
| 637 | GLYCEROL H2O | HOCH2CHOHCH2OH | 56-81-5 | 1231 | FLAMMABLE | | | | CAB 19-2 | 281 LITER | 2 LITER |
| 36 | GLYCOLIC ACID | HOCH2CO2H | 79-14-1 | 2264 | | | | | FRIG | 1850 ML | 50 ML |
| 166 | GLYCOLIC ACID | HOCH2CO2H | 79-14-1 | 2264 | | | | | CAB 3-3 | 18500 GM | 500 GM |
| 371 | GLYCOLIC ACID | HOCH2CO2H | 79-14-1 | 2264 | | | | | GROUT CART RM A | 181000 GM | 1000 GM |
| 1403 | GLYCOLIC ACID | HOCH2COOH | 79-14-1 | 2264 | | | | | CAB 34-2 | 281000 ML | 2000 ML |
| 1076 | GRAMERCY UNIVERSAL INDICATOR | | | | | | | | CAB 27-4 | 18500 ML | 500 ML |
| 1112 | GRAPHITE POWDER | C | 7782-42-5 | 2256 | | | | | CAB 27-4 | 181 OZ. | 1 OZ. |
| 1116 | GREASE | | | | | | | | CAB 32-4 | 484 OZ. | 16 OZ. |
| 1538 | HAFNIUM POWDER | HF | 7440-58-6 | | FLAMMABLE | | | | 74 | 181 GM | 1 GM |
| 581 | HALOCARBON 25-55 GREASE | | | | | | | | DRAWER 16 | 181 OZ | 1 OZ. |
| 1561 | HEAVY METAL | | | | | | | | GROUT CART RM A | 18250 ML | 250 ML |
| 370 | HEDTA TRISODIUM SALT DIHYDRATE | HOCH2CH2N(CH2CO2NA)CH2CH2N(CH2CO2NA)2-2H2O | 139-89-9 | 3342 | | | | | GROUT CART | 181000 GM | 1000 GM |

Table A-4. 222-SA Chemical Inventory by Common Name. (sheet 12 of 35)

| | | | | | | | | | | |
|---|---|---|---|---|---|---|---|---|---|---|
| 378 | HEDTA TRISODIUM SALT DIHYDRATE | HOCH2CH2N(CH2CO2-NA) CH2CH2N(CH2CO2NA)2-2 H2O | 139-89-9 | 3342 | | | | CAB 8-1 | 181000 GM | 1000 GM |
| 992 | HEDTA TRISODIUM SALT DIHYDRATE | HOCH2CH2N(CH2CO2NA)C H2CH2N(CH2CO2NA)2-2H 2O | 139-89-9 | 3342 | | | | DESC 4 | 1810 GM | 10 GM |
| 993 | HEDTA TRISODIUM SALT DIHYDRATE | HOCH2CH2N(CH2CO2NA)C H2CH2N(CH2CO2NA)2-2H 2O | 139-89-9 | 3342 | | | | DESC 4 | 1810 GM | 10 GM |
| 1306 | HEDTA TRISODIUM SALT DIHYDRATE | HOCH2CH2N(CH2CO2NA)C H2CH2N(CH2CO2NA)2-2H 2O | 139-89-9 | 3342 | | | | CAB 26-2 | 18100 GM | 100 GM |
| 1558 | HEDTA TRISODIUM SALT DIHYDRATE | HOCH2CH2N(CH2CO2NA)C H2CH2N(CH2CO2NA)2-2H 2O | 139-89-9 | 3342 | | | | CAB 3-4 | 38100 GM | 500 GM |
| 1650 | HEDTA TRISODIUM SALT DIHYDRATE | HOCH2CH2N(CH2CO2NA)C H2CH2N(CH2CO2NA)2-2H 2O | 139-89-9 | 3342 | | | | CAB 13-2 | 2825 GM | 50 GM |
| 679 | HEPTANE | CH3(CH2)5CH3 | 142-82-5 | 2142 | FLAMMABLE LIQUI | | | CAB 20-4 | 182 PT. | 2 PINT |
| 680 | HEPTANE | CH3(CH2)5CH3 | 142-82-5 | 2142 | FLAMMABLE LIQUI | | | CAB 20-4 | 58500 ML | 2500 ML |
| 167 | HEXAMETHYLENE TETRAMINE | C6H12N4 | 100-97-0 | 1246 | FLAMMABLE SOLID | Y | | CAB 36 ARCHIVE | 28500 GM | 1000 GM |
| 168 | HEXAMINO COBALTIC CHLORIDE | (CO(NH3)6)CL3 | 10534-89-1 | | | | | CAB 36 ARCHIVE | 28500 GM | 1000 GM |
| 1373 | HEXANE-N-ACETATE | | | | FLAMMABLE | | | CAB 24-2 | 18500 ML | 500 ML |
| 696 | HOLMIUM | HO | | | CORROSIVE | | 2% HNO3 | CAB 22-3 | 28500 ML | 1000 ML |
| 1540 | HOLMIUM CHLORIDE | HOCL3-6H2O | 14914-84-2 | | | | | 74 | 1810 GM | 10 GM |
| 1539 | HOLMIUM OXIDE | HO(NO3)3-5H2O | 14483-18-2 | | | | | 74 | 1810 GM / 185 GM | 15 GM |
| 1401 | HVC 211-214 | | | | | | | CAB 34-2 | 38500 ML | 1500 ML |
| 27 | HYDRAZINE | N2NNH2-H2O | 7803-57-8 | 1651 | CORROSIVE POISO | Y | Y | FRIG | 28500 | 1000 ML |
| 169 | HYDRAZINE SULFATE | (NH2)2H2SO4 | 10034-93-2 | 2298 | POISON | Y | Y | CAB 3-3 | 48125 GM / 38500 GM | 2000 GM |
| 418 | HYDRAZINE SULFATE | (NH2)2H2SO4 | 10034-93-2 | 2298 | POISON | Y | Y | CAB 8-5 | 18500 GM | 500 GM |
| 1023 | HYDRAZINE SULFATE | (NH2)2H2SO4 | 10034-93-2 | 2298 | POISON | Y | Y | DESC 7 | 1830 GM | 30 GM |
| 1652 | HYDRAZINE SULFATE | (NH2)2H2SO4 | 10034-93-2 | 2298 | POISON | Y | Y | CAB 36 ARCHIVE | 28100 GM | 200 GM |
| 1382 | HYDRID SOL'N ARSENIC | AS | | | POISON | Y | | CAB 27-2 | 18100 ML | 100 ML |
| 1393 | HYDRID SOL'N MERCURY | HG | | | | | | CAB 27-2 | 18100 ML | 100 ML |
| 1340 | HYDRID SOL'N SELENIUM | SE | | | | | | CAB 27-2 | 18100 ML | 100 ML |
| 302 | HYDROBROMIC ACID | ABR | 10035-10-6 | 2034 | POISON/CORROSIV | | | CAB 6-4 | 108500 ML | 5000 ML |
| 14 | HYDROBROMINE | | | | | | | HD 4 | 181 LITER | 1 LITER |
| 4 | HYDROCHLORIC ACID | HCL | 7647-01-0 | 1250 | CORROSIVE | | Y | 143 | 38500 ML | 1500 ML |
| 22 | HYDROCHLORIC ACID | HCL | 7647-01-0 | 1250 | CORROSIVE | | Y | HD 4 | 18250 ML / 18500 ML | 750 ML |
| 528 | HYDROCHLORIC ACID | HCL | 7647-01-0 | 1250 | CORROSIVE | | Y | N CAB SIDE 2 UNDER SINK | 28500 ML | 1000 ML |
| 579 | HYDROCHLORIC ACID | HCL | 7647-01-0 | 1250 | CORROSIVE | | Y | CAB 2 UNDER SINK | 68500 ML | 3000 ML |
| 614 | HYDROCHLORIC ACID | HCL | 7647-01-0 | 1250 | CORROSIVE | | Y | CAB 41-2 | 48500 ML | 2000 ML |
| 779 | HYDROCHLORIC ACID | HCL | 7647-01-0 | 1250 | CORROSIVE | | Y | CAB 37 ARCHIVE | 38200 ML / 68100 ML | 1200 ML |
| 1387 | HYDROCHLORIC ACID | HCL | 7647-01-0 | 1250 | CORROSIVE | | Y | ORGANIC BENCH TOP | 182500 ML | 2500 ML |
| 766 | HYDROCHLORIC AMPOULES | HCL | 7647-01-0 | 1250 | CORROSIVE | | Y | CAB 37 ARCHIVE | 7581 ML | 75 ML |
| 942 | HYDROCHLORIDE | HCL | | | CORROSIVE | | | CAB 22-6 | 38500 GM | 1500 GM |
| 21 | HYDROFLUORIC ACID | HF | 7664-39-3 | 1251 | CORROSIVE POISO | | | HD 4 | 18500 ML | 500 ML |
| 30 | HYDROGEN PEROXIDE | H2O2 | 7722-84-1 | 1257 | CORROSIVE OXIDI | | | FRIG | 68500 ML | 3000 ML |
| 588 | HYDROGEN SULFATE | H2SO4 | | | | | | CAB 17-3 | 18100 ML | 100 ML |
| 422 | HYDROQUINONE | C6H4(OH)2 | 123-31-9 | 1262 | POISON | | | CAB 3-4 | 38500 GM | 1500 GM |

Table A-4. 222-SA Chemical Inventory by Common Name. (sheet 13 of 35)

| REC. | COMMON NAME | FORMULA | CAS NUMBER | MSDS # | CLASSIFICATION | C | P | MATRIX | LOCATION | UNITS/SIZE | TOTAL |
|---|---|---|---|---|---|---|---|---|---|---|---|
| 1412 | HYDROXIDE HYDRACHLORIC | | | | | | | | CAB 34-6 | 10250 ML | 250 ML |
| 1443 | HYDROXLAMINE SULFATE | (H2NOH)2-H2SO4 | 10039-54-0 | 1688 | POISON CORROSIV | | | | CAB 36 ARCHIVE | 104000 GM | 4000 GM |
| 1228 | HYDROXY NAPHTHOL BLUE | | | | | | | | CAB 13-2 | 10100 GM | 100 GM |
| 1563 | HYDROXYETHYLETHYLENEDIAMINE-N-TRIACETIC ACID | HOCH2CH2N-(CH2CO2H)C H2CH2N(CH2CO2H)2 | 150-39-0 | 3368 | | | | | GROUT CART RM A | 10100 GM | 100 GM |
| 173 | HYDROXYLAMINE HYDROCHLORIDE | NH2OH-HCL | 5470-11-1 | 1263 | CORROSIVE POISO | | | | CAB 3-4 | 148500 GM | 7000 GM |
| 417 | HYDROXYLAMINE HYDROCHLORIDE | NH2OH-HCL | 5470-11-1 | 1263 | POISON CORROSIV | | | | CAB 8-5 | 28500 GM | 1000 GM |
| 171 | HYDROXYLAMINE NITRATE | NH2OHHNO3 | 13465-08-2 | 1264 | | | | | CAB 23-4 | 101000 ML /28500 ML | 2000 ML |
| 172 | HYDROXYLAMINE SULFATE | (NH2OH)2-H2SO4 | 10039-54-0 | 1688 | POISON CORROSIV | | | | CAB 3-4 | 10125 GM | 125 GM |
| 170 | HYDROXYQUINOLINE-8 | HOC6H6N | 148-24-3 | 1893 | | | | | CAB 3-4 | 28500 GM | 1000 GM |
| 1229 | INDIGO CARMINE | C16H8N2NA2O8S2 | 860-22-0 | 1682 | | | | | CAB 13-2 | 1025 GM | 25 GM |
| 1541 | INDIUM NITRATE | IN(NO3)3-H2O | 13465-14-0 | | OXIDIZER | | | | CAB 36 ARCHIVE | 1025 GM | 25 GM |
| 777 | IODINE 2 | I2 | 7553-56-2 | 1266 | POISON CORROSIV | | | | CAB 37 ARCHIVE | 68200 ML | 1200 ML |
| 175 | IODINE CRYSTALS | I2 | 7553-56-2 | 1266 | POISON CORROSIV | | | | CAB 3-4 | 10100 GM | 100 GM |
| 174 | IODINE RESUBLIMED | I2 | 7553-56-2 | 1266 | POISON CORROSIV | | | | CAB 3-4 | 28500 GM / 10100 GM | 1100 GM |
| 668 | IONALYZER 2 N | (NH4)4SO4 | | | | | | | 44 | 1050 ML | 50 ML |
| 1466 | IRIDIUM POWDER | IR | 7439-88-5 | 17224 | FLAMMABLE | | | | 74 | 102 GM | 2 GM |
| 1542 | IRIDIUM TRIBROMIDE | IRBR3-4H2O | | | | | | | 74 | 1010 GM | 10 GM |
| 720 | IRON | FE | 7439-89-6 | 1269 | FLAMMABLE SOLID | | | | CAB 7-2 | 48250 GM | 1000 GM |
| 774 | IRON | FE | | | CORROSIVE | | | 2% HCL | CAB 37 ARCHIVE | 10500 ML | 500 ML |
| 780 | IRON | FE | 7439-89-6 | 1269 | | | | | CAB 37 ARCHIVE | 48100 ML | 400 ML |
| 798 | IRON | FE | | | CORROSIVE | | | 2% HNO3 | CAB 23-4 | 28500 ML | 1000 ML |
| 809 | IRON | FE | 7647-01-0 | | CORROSIVE | | | 10% HCL | CAB 23-3 | 2850 ML | 100 ML |
| 871 | IRON | FE | | | CORROSIVE | | | 2% HCL | CAB 22-2 | 10500 ML | 500 ML |
| 893 | IRON | FE | | | CORROSIVE | | | 2% HNO3 | CAB 22-3 | 10500 ML | 500 ML |
| 1461 | IRON | FE | | | | | | | CAB 23-3 | 1050 ML | 50 ML |
| 724 | IRON ELECTROLYTE | FE | 7439-89-6 | 1269 | POISON CORROSIV | | Y | | CAB 7-2 | 1010 GM /1050 GM | 60 GM |
| 1207 | IRON ELECTROLYTE | FE | 7439-89-6 | 1269 | POISON CORROSIV | | Y | | CAB 13-4 | 10100 GM | 100 GM |
| 726 | IRON NARZ | FE | 7439-89-6 | 1269 | FLAMMABLE SOLID | | | | CAB 7-2 | 10100 GM /102 GM | 102 GM |
| 1285 | IRON OPEN HEARTH | | | | | | | | CAB 13-4 | 10100 GM | 100 GM |
| 721 | IRON WIRE | FE | 7439-89-6 | 1269 | FLAMMABLE SOLID | | | | CAB 7-2 | 1012 FT | 12 FT. |
| 723 | IRON WIRE | FE | 7439-89-6 | 1269 | FLAMMABLE SOLID | | | | CAB 7-2 | 1050 GM / 1010 GM | 60 GM |
| 625 | ISO-AMYL-ALCOHOL | (CH3)2CHCH2CH2OH | 123-51-3 | 2037 | FLAMMABLE CORRO | | | | CAB 19-1 | 98500 ML | 4500 ML |
| 639 | ISO-OCTANE | (CH3)2CHCH2C(CH3)3 | 540-84-1 | 1272 | FLAMMABLE | | | | CAB 19-3 | 76800 ML | 5400 ML |
| 646 | ISO-PROPYL ALCOHOL | CH3CHOHCH3 | 67-63-0 | 1279 | FLAMMABLE | Y | | | CAB 19-4 | 188 PT | 8 PINT |
| 649 | ISO-PROPYL ALCOHOL | CH3CHOHCH3 | 67-63-0 | 1279 | FLAMMABLE | Y | | | CAB 19-4 | 684 LITER | 24 LITERS |
| 627 | ISOPENTYL ALCOHOL | (CH3)2CHCH2CH2OH | 123-51-3 | 2037 | FLAMMABLE | | | | CAB 19-1 | 18500 ML | 500 ML |
| 630 | LAB SOLV. 25%TSP/MPK | | | | FLAMMABLE | | | | CAB 19-1 | 38100 ML | 300 ML |
| 572 | LABORATORY SPILL KIT ACIDS | | | | | | | | N AND S DOOR OF LAB | 302 LB | 6 LB |
| 573 | LABORATORY SPILL KIT CAUSTIC | | | | | | | | N & S END OF DOOR LAB | 202LB | 4 LB |
| 575 | LABORATORY SPILL KIT FLAMMABLE SOLVENTS | | | | | | | | N DOOR OF LAB | 102 LB | 2 LB |
| 571 | LABORATORY SPILL KIT HYDROFLUORIC ACID | | | | | | | | N DOOR LAB | 102 LB | 2 LB |
| 570 | LABORATORY SPILL KIT MERCURY | | | | | | | | N DOOR OF LAB | 102 LB | 2 LB |
| 574 | LABORATORY SPILL KIT SOLVENTS | | | | | | | | N END OF DOOR OF LAB | 102LB | 2 LB |
| 830 | LANTHANUM | LA | 7647-01-0 | 1901 | CORROSIVE | | | 10% HCL | CAB 23-3 | 1050 ML | 50 ML |
| 843 | LANTHANUM | LA | 7439-91-0 | 1901 | CORROSIVE | | | 2% HNO3 | CAB 23-4 | 28500 ML | 1000 ML |
| 900 | LANTHANUM | LA | 7429-91-0 | 1901 | CORROSIVE | | | 2% HNO3 | CAB 22-3 | 10500 ML | 500 ML |
| 1048 | LANTHANUM | LA | 7439-91-0 | 1901 | CORROSIVE | | | 2% HNO3 | CAB 37 ARCHIVE | 10500 ML | 500 ML |
| 1543 | LANTHANUM CHLORANILATE | | | | | | | | 74 | 1025 GM | 25 GM |
| 176 | LANTHANUM CHLORIDE | LACL3-4H2O | 20211-76-1 | 1286 | | | | | CAB 3-4 | 28100 GM | 200 GM |

# Table A-4. 222-SA Chemical Inventory by Common Name. (sheet 14 of 35)

| SEC. | COMMON NAME | FORMULA | CAS NUMBER | HSDS # | CLASSIFICATION | C | P | MATRIX | LOCATION | UNITS/SIZE | TOTAL |
|---|---|---|---|---|---|---|---|---|---|---|---|
| 177 | LANTHANUM CHLORIDE | LACL3-4H2O | 10099-58-8 | 1286 | | | | | CAB 3-4 | 78100 GM | 3500 GM |
| 178 | LANTHANUM CHLORIDE | LACL2-7H2O | 10099-58-8 | 1286 | | | | | CAB 36 ARCHIVE | 1825 GM | 25 GM |
| 179 | LANTHANUM NITRATE | LA(NO3)3-6H2O | 10277-43-7 | 2279 | OXIDIZER | | | | CAB 36 ARCHIVE | 18100 GM | 100 GM |
| 499 | LANTHANUM NITRATE | LA(NO3)3-6H2O | 10277-43-7 | 2279 | OXIDIZER | | | | CAB 12-4 | 18100 GM / 1810 GM | 110 GM |
| 479 | LANTHANUM OXIDE | LA2O3 | 1312-81-8 | 2591 | | | | | CAB 12-2 | 28250 GM | 500 GM |
| 968 | LANTHANUM OXIDE | LA2O3 | 1312-81-8 | 2591 | | | | | CESC 2 | 18100 GM | 100 GM |
| 980 | LANTHANUM OXIDE | LA2O3 | 1312-81-8 | 2591 | | | | | DESC 3 | 1820 GM | 20 GM |
| 1463 | LANTHANUM OXIDE | LA2O3 | 1312-81-8 | 2591 | | | | | 74 | 182 GM | 2 GM |
| 1544 | LANTHANUM OXIDE | LA2O3 | 1312-81-8 | 2591 | | | | | 74 | 185 GM | 5 GM |
| 247 | LEAD | PB | | | CORROSIVE | | | 10% HCL | CAB 23-4 | 18500 ML | 500 ML |
| 806 | LEAD | PB | 7439-92-1 | 1288 | CORROSIVE | | | 10% HNO3 | CAB 23-3 | 4850 ML | 200 ML |
| 844 | LEAD | PB | 7439-92-1 | 1288 | CORROSIVE | | | 2% HNO3 | CAB 23-4 | 28500 ML | 1000 ML |
| 905 | LEAD | PB | 7439-92-1 | 1288 | CORROSIVE | | | 2% HNO3 | CAB 22-4 | 18500 ML | 500 ML |
| 1054 | LEAD | PB | 7439-92-1 | 1288 | CORROSIVE | | | 2% HNO3 | CAB 37 ARCHIVE | 18500 ML | 500 ML |
| 181 | LEAD ACETATE | (CH3COO)2PB-3H2O | 1335-32-6 | 2246 | POISON | Y | | | CAB 3-5 | 18500 GM | 500 GM |
| 180 | LEAD CHROMATE | PBCRO4 | 7758-97-6 | 2333 | | Y | | | CAB 36 ARCHIVE | 18500 GM | 500 GM |
| 1545 | LEAD CYCLOHEXANEBUTYRATE | PB(O2C(CH2)4)2 | | 16924 | | Y | | | 74 | 185 GM | 5 GM |
| 1546 | LEAD FLUORIDE (ANHYDROUS) | PBF2 | 7783-46-2 | | POISON CORROSIVE | | | | 74 | 18100 GM | 100 GM |
| 752 | LEAD METAL | PB | 7439-92-1 | 1288 | POISON | | | | CAB 7-4 | 1830 GM / 1830 GM | 130 GM |
| 182 | LEAD NITRATE | PB(NO3)2 | 10099-74-8 | 1291 | OXIDIZER | | | | CAB 3-5 | 18500 GM | 500 GM |
| 977 | LEAD NITRATE | PB(NO3)2 | 10099-74-8 | 1291 | OXIDIZER | | | | DESC 3 | 1850 GM | 50 GM |
| 1351 | LEAD NITRATE | PB(NO3)2 | 10099-74-8 | 1291 | OXIDIZER | | | H2O 1 M | CAB 37 ARCHIVE | 18100 ML | 100 ML |
| 1377 | LEAD NITRATE | PB(NO3)2 | 10099-74-8 | 1291 | OXIDIZER | | | | DESC 11 DENSITY BNCH TOP | 18100 GM | 100 GM |
| 1453 | LEAD NITRATE | PB(NO3)2 | 10099-74-8 | 1291 | OXIDIZER | | | | CAB 36 ARCHIVE | 28500 GM | 1000 GM |
| 512 | LEAD OXIDE | PBO | 1317-36-8 | 1292 | OXIDIZER | | | | CAB 36 ARCHIVE | 185 GM | 5 GM |
| 183 | LEAD PEROXIDE | PBO2 | 1309-60-0 | 1654 | OXIDIZER | | | | CAB 36 ARCHIVE | 18500 GM | 500 GM |
| 184 | LEAD PHOSPHATE | PB3(PO4)2 | | | POISON | Y | | | CAB 3-5 | 18100 GM | 100 GM |
| 763 | LEAD STANDARD | PB | | | CORROSIVE | | | | CAB 37 ARCHIVE | 28500 ML | 1000 ML |
| 1288 | LINEAR POLYETHYLENE | | | | | | | | CAB 13-4 | 18100 GM | 100 GM |
| 1033 | LINSEED OIL | | | | | | | | DOCK | 181 GAL | 1 GALLON |
| 790 | LITHIUM | LI | | | CORROSIVE | | | 2% HCL | CAB 37 ARCHIVE | 28500 ML | 1000 ML |
| 803 | LITHIUM | LI | 7647-01-0 | | CORROSIVE | | | 1% HCL | CAB 23-3 | 3850 ML | 150 ML |
| 846 | LITHIUM | LI | | | CORROSIVE | | | 2% HNO3 | CAB 23-1 | 28500 ML | 1000 ML |
| 857 | LITHIUM | LI | | | CORROSIVE | | | 2% HNO3 | CAB 23-4 | 18500 ML | 500 ML |
| 899 | LITHIUM | LI | | | CORROSIVE | | | 2% HNO3 | CAB 22-3 | 18500 ML | 500 ML |
| 1049 | LITHIUM | LI | | | CORROSIVE | | | 2% HNO3 | CAB 27-1 | 18500 ML | 500 ML |
| 1061 | LITHIUM | LI | | | CORROSIVE | | | 2% HNO3 | CAB 37 ARCHIVE | 18500 ML | 500 ML |
| 1570 | LITHIUM | LI | 7647-01-0 | | CORROSIVE | | | 1% HCL | CAB 23-3 | 1850 ML | 50 ML |
| 185 | LITHIUM BROMIDE | LIBR | 7550-35-8 | 1705 | | | | | CAB 3-5 | 18500 GM | 500 GM |
| 186 | LITHIUM CARBONATE | LI2CO3 | 554-13-2 | 1614 | CORROSIVE | | | | CAB 3-5 | 18500 GM | 500 GM |
| 1654 | LITHIUM CARBONATE | LI2CO3 | 554-13-2 | 1614 | CORROSIVE | | | | CAB 36 ARCHIVE | 28500 GM | 1000 GM |
| 187 | LITHIUM CHLORIDE | LICL | 7447-41-8 | 1615 | | | | | CAB 3-5 | 18500 GM | 500 GM |
| 1655 | LITHIUM CHLORIDE | LICL | 7447-41-8 | 1615 | | | | | CAB 36 ARCHIVE | 48125 | 500 GM |
| 188 | LITHIUM FLUORIDE | LIF | 7789-24-4 | 2283 | POISON | | | | CAB 36 ARCHIVE | 28500 GM | 1000 GM |
| 209 | LITHIUM HYDROXIDE | LIOH-H2O | 1310-66-3 | 1302 | CORROSIVE | | | | CAB 3-7 | 181000 GM | 1000 GM |
| 189 | LITHIUM NITRATE | LINO3 | 7790-69-4 | 1616 | OXIDIZER | | | | CAB 3-5 | 28500 GM | 1000 GM |
| 190 | LITHIUM TETRABORATE | LI2B4O7 | 12007-60-2 | | | | | | CAB 3-5 | 18500 GM | 500 GM |
| 1656 | LITHIUM TETRABORATE | LI2B4O7 | 12007-60-2 | | | | | | CAB 36 ARCHIVE | 18250 GM | 250 GM |
| 1612 | LO. YUN NATURAL CNS-SWY-1 | | | | | | | | CAB 21-2 DESC. | 181 VIAL | 1 VIAL |
| 1593 | LUBRICANT | | | | | | | | CAB 21-7 | 1811 OZ. | 11 OZ. |

Table A-4. 222-SA Chemical Inventory by Common Name. (sheet 15 of 35)

| REC. | COMMON NAME | FORMULA | CAS NUMBER | MSDS # | CLASSIFICATION | C | P | MATRIX | LOCATION | UNITS/SIZE | TOTAL |
|---|---|---|---|---|---|---|---|---|---|---|---|
| 901 | LUTETIUM | LU | | | CORROSIVE | | | 2% HNO3 | CAB 22-3 | 20500 ML | 1000 ML |
| 1512 | LUTETIUM CHLORIDE | LUCL3 | 10099-66-8 | | | | | | 74 | 102 GM | 2 GM |
| 1517 | LUTETIUM OXIDE | LU2O3 | 12032-20-1 | | | | | | 74 | 101 GM | 1 GM |
| 813 | MAGNESIUM | MG | 7647-01-0 | | CORROSIVE | | | 10% HCL | CAB 23-3 | 3850 ML | 150 ML |
| 845 | MAGNESIUM | MG | | | CORROSIVE | | | 2% HNO3 | CAB 23-4 | 20500 ML | 1000 ML |
| 902 | MAGNESIUM | MG | | | CORROSIVE | | | 2% HNO3 | CAB 22-3 | 20500 ML | 1000 ML |
| 1514 | MAGNESIUM | MG | 7439-95-4 | 1617 | FLAMMABLE | | | | CAB 7-2 | 105 GM | 5 GM |
| 191 | MAGNESIUM CARBONATE | MGCO3 | 546-93-0 | 1308 | | | | | CAB 36 ARCHIVE | 10100 GM | 100 GM |
| 192 | MAGNESIUM CERIUM NITRATE | | | | | | | | CAB 36 ARCHIVE | 1010 GM | 10 GM |
| 713 | MAGNESIUM CHIPS | MG | 7439-95-4 | 1312 | FLAMMABLE | | | | CAB 7-2 | 20250 GM | 500 GM |
| 193 | MAGNESIUM CHLORIDE | MGCL2-6H2O | 7791-18-6 | 1309 | | | | | CAB 3-5 | 60500 GM | 3000 GM |
| 416 | MAGNESIUM CHLORIDE | MGCL2-6H2O | 7791-18-6 | 1309 | | | | | CAB 8-5 | 10500 GM | 500 GM |
| 1025 | MAGNESIUM CHLORIDE | MGCL2-6H2O | 7791-18-6 | 1309 | | | | | DESC 8 | 1025 GM | 25 GM |
| 1657 | MAGNESIUM CHLORIDE | MGCL2 | 7786-30-3 | 1309 | | | | | CAB 36 ARCHIVE | 20500 GM | 1000 GM |
| 1451 | MAGNESIUM CYCLOHEXANE BUTYRATE | MG(O2C10H17)2 | | | | | | | 74 | 205 GM | 10 GM |
| 194 | MAGNESIUM HYDROXIDE | MGO2H2 | 1309-42-8 | 1311 | CORROSIVE | | | | CAB 3-6 | 10500 GM | 500 GM |
| 738 | MAGNESIUM METAL POWDER | MG | 7439-95-4 | 1617 | FLAMMABLE | | | | CAB 7-2 | 10100 GM | 100 GM |
| 737 | MAGNESIUM METAL TURNINGS | MG | 7439-95-4 | 1312 | FLAMMABLE | | | | CAB 7-3 | 10453.6 GM | 453.6 GM |
| 195 | MAGNESIUM NITRATE | MG(NO3)2-6H2O | 10377-60-3 | 3339 | OXIDIZER | | | | CAB 3-6 | 50500 GM | 2500 GM |
| 943 | MAGNESIUM NITRATE | MGNO3 | 10377-60-3 | 3339 | OXIDIZER | | | | CAB 36 ARCHIVE | 10500 GM | 500 GM |
| 1031 | MAGNESIUM NITRATE | MG(NO3)2-6H2O | 10377-60-3 | 3339 | OXIDIZER | | | | DESC 9 | 1050 GM | 50 GM |
| 141 | MAGNESIUM OXIDE | MGO | 1309-48-4 | 1314 | | | | | CAB 2-8 | 10500 GM | 500 GM |
| 481 | MAGNESIUM OXIDE | MGO | 1309-48-4 | 1314 | | | | | CAB 12-2 | 1025 GM | 25 GM |
| 937 | MAGNESIUM OXIDE | MGO | 1309-48-4 | 1314 | | | | | CAB 36 ARCHIVE | 10500 GM / 1010 GM | 510 GM |
| 709 | MAGNESIUM PIECES | MG | 7439-95-4 | 1312 | FLAMMABLE | | | | CAB 7-2 | 20500 GM | 1000 GM |
| 196 | MAGNESIUM SULFATE | MGSO4 | 7487-88-9 | 1316 | OXIDIZER | | | | CAB 3-6 | 10500 GM | 500 GM |
| 712 | MAGNESIUM TURNINGS | MG | 7439-95-4 | 1312 | FLAMMABLE | | | | CAB 7-2 | 105 GM / 1025 GM / 10500 GM | 520 GM |
| 935 | MALIC ACID | HO2CCH2CH(OH)CO2H | 636-61-3 | 2474 | | | | | CAB 36 ARCHIVE | 10125 GM | 125 GM |
| 197 | MALONIC ACID | HO2C2H2CO2H | 141-82-2 | 1318 | | | | | CAB 3-6 | 20500 GM | 1000 GM |
| 364 | MALONIC ACID | HO2C2H2CO2H | 141-82-2 | 1318 | | | | | CAB 36 ARCHIVE | 20500 GM | 1000 GM |
| 776 | MANGANESE | MN | | | CORROSIVE | | | | CAB 37 ARCHIVE | 20100 ML | 200 ML |
| 821 | MANGANESE | MN | 7697-37-2 | | CORROSIVE | | | 10% HNO3 | CAB 23-3 | 3850 ML | 150 ML |
| 855 | MANGANESE | MN | | 16307 | CORROSIVE | | | 2% HNO3 | CAB 23-4 | 10500 ML | 500 ML |
| 1660 | MANGANESE | MN | | | | | | .4999 N HCL | CAB 27-1 | 10500 ML | 500 ML |
| 198 | MANGANESE DIOXIDE | MNO2 | 1313-13-9 | 2336 | OXIDIZER | | | | CAB 3-6 | 10500 GM | 500 GM |
| 414 | MANGANESE DIOXIDE | MNO2 | 1313-13-9 | 2336 | OXIDIZER | | | | CAB 8-5 | 10500 GM | 500 GM |
| 413 | MANGANESE NITRATE | MN(NO3)2-4H2O | 2069-39-7 | 1970 | OXIDANT | | | | CAB 8-5 | 10500 GM | 500 GM |
| 199 | MANGANESE OXIDE | MNO2 | 1313-13-9 | 2336 | OXIDIZER | | | | CAB 3-6 | 10200 GM | 200 GM |
| 695 | MANGANESE OXIDE | MNO2 | 1313-13-9 | 2336 | OXIDIZER | | | | CAB 36 ARCHIVE | 101 GM | 1 GM |
| 985 | MANGANESE OXIDE | MNO2 | 1313-13-9 | 2336 | OXIDIZER | | | | DESC 3 | 105 GM | 5 GM |
| 1004 | MANGANESE OXIDE | MNO2 | 1313-13-9 | 2336 | OXIDIZER | | | | DESC 5 | 1050 GM | 50 GM |
| 201 | MANGANESE SULFATE | MNSO4-H2O | 10034-96-5 | 1316 | | | | | CAB 36 ARCHIVE | 10500 GM | 500 GM |
| 999 | MANGANESE SULFATE | MNSO4-H2O | 10034-96-5 | 1316 | | | | | DESC 4 | 1025 GM | 25 GM |
| 200 | MANGANOUS CHLORIDE | MNCL2-H2O | 13446-34-9 | | | | | | CAB 36 ARCHIVE | 20500 GM | 1000 GM |
| 917 | MANGANOUS NITRATE | MN(NO3)2 | 15710-66-4 | 1970 | OXIDIZER | | | | CAB 22-5 | 10500 ML | 500 ML |
| 367 | MANGANOUS SULFATE | | 7785-87-7 | 1505 | | | | | CAB 36 ARCHIVE | 30500 GM | 1500 GM |
| 202 | MERCURIC CHLORIDE | HGCL2 | 7487-94-7 | 2247 | POISON | | | | CAB 3-6 | 10125 /10500 GM | 625 GM |
| 1452 | MERCURIC CHLORIDE | HGCL2 | 7487-94-7 | 2247 | POISON | | | | CAB 36 ARCHIVE | 10113.4 GM / 10125 GM | 238.4 GM |
| 203 | MERCURIC IODIDE | HGI2 | 7774-29-0 | 1681 | POISON | | | | CAB 36 ARCHIVE | 20250 GM / 10500 GM | 1000 GM |
| 204 | MERCURIC IODIDE | HGI2 | 7774-29-0 | 1681 | POISON | | | | CAB 3-6 | 10500 GM | 5000 GM |

Table A-4. 222-SA Chemical Inventory by Common Name. (sheet 16 of 35)

| REC. | COMMON NAME | FORMULA | CAS NUMBER | NSGS # | CLASSIFICATION | C | P | MATRIX | LOCATION | UNITS/SIZE | TOTAL |
|---|---|---|---|---|---|---|---|---|---|---|---|
| 225 | MERCURIC NITRATE | HG(NO3)2 | 10045-94-0 | 1321 | POISON OXIDIZER | | | | CAB 36 ARCHIVE | 10100 GM | 100 GM |
| 205 | MERCURIC SULFATE | HGSO4 | 7783-35-9 | 2810 | POISON CORROSIV | | Y | | CAB 36 ARCHIVE | 10500 GM | 500 GM |
| 226 | MERCURIC THIOCYANATE | HG(CNS)2 | 592-85-8 | 1322 | POISON | | Y | | CAB 36 ARCHIVE | 1050 GM / 10500 GM | 550 GM |
| 227 | MERCURIC THIOCYANATE | HG(CNS)2 | 592-85-8 | 1322 | POISON | | Y | | CAB 4-1 | 28500 GM | 1000 GM |
| 224 | MERCUROUS NITRATE | HGNO3-H2O | 7782-86-7 | 2174 | POISON | | Y | | CAB 36 ARCHIVE | 10125 GM | 125 GM |
| 206 | MERCUROUS SULFATE | HG2SO4 | 7783-36-0 | | POISON | | Y | | CAB 3-6 | 10100 GM | 200 GM |
| 722 | MERCURY | HG | 7439-97-6 | 1323 | POISON | | Y | | CAB 7-2 | 28250 GM | 500 GM |
| 897 | MERCURY | HG | 7697-37-2 | | CORROSIVE | | | 10% HNO3 | CAB 22-3 | 10500 ML | 500 ML |
| 1388 | MERCURY | HG | 7697-37-2 | | CORROSIVE | | | 10% HNO3 | CAB 27-2 | 10500 ML / 1050 ML | 550 ML |
| 767 | MERCURY 2 | HG2 | | | POISON | | | | CAB 37 ARCHIVE | 28200 ML | 400 ML |
| 301 | META-BISULFITE | NA2S2O5 | | | | | | | CAB 5-3 | 10500 GM | 500 GM |
| 633 | METHANOL | CH3OH | 67-56-1 | 1329 | FLAMMABLE POISO | | Y | | CAB 19-2 | 258500 ML | 12500 ML |
| 640 | METHANOL | CH3OH | 67-56-1 | 1329 | FLAMMABLE POISO | | Y | | CAB 19-3 | 258500 ML | 12500 ML |
| 1131 | METHANOL | CH3OH | 67-56-1 | 1329 | FLAMMABLE POISO | | Y | | CAB 24-3 | 258500 ML | 12500 ML |
| 1237 | METHYL 2-8 QUINOLINOL | | 826-81-3 | 2214 | | | | | CAB 13-2 | 2825 GM | 50 GM |
| 272 | METHYL 3-1 PHENYL-2-PRYAZOLIN-5 | C6H5NN:C(CH3)C2H2O | 89-25-8 | 2042 | | | | | CAB 36 ARCHIVE | 10500 GM | 500 GM |
| 1233 | METHYL CALCEIN | | 54696-41-2 | | | | | | CAB 13-2 | 585 GM | 25 GM |
| 659 | METHYL ISO-BUTYL KETONE | CH3COCH2CH(CH3)2 | 108-10-1 | 1343 | FLAMMABLE | | | | CAB 20-2 | 781 QT. | 8 QUART |
| 1085 | METHYL ORANGE | (CH3)2NC6HN=CHCH2CH2 COCH3 | 547-58-0 | 1346 | | | | | CAB 37-6 | 10125 ML | 125 ML |
| 1234 | METHYL ORANGE | (CH3)2NC6HN=CHCH2CH2 COCH3 | 547-58-0 | 1346 | | | | | CAB 13-2 | 2850 GM | 100 GM |
| 1104 | METHYL ORANGE .05% | (CH3)2NC6H=CHCH2CH2C OCH3 | 547-58-0 | 1346 | | | | | CAB 37-6 | 10100 ML | 100 ML |
| 1067 | METHYL ORANGE 1% | (CH3)2NC6HN=CHCH2CH2 COCH3 | 547-58-0 | 1346 | | | | | CAB 37-6 | 101 LITER | 1 LITER |
| 1081 | METHYL ORANGE 5% | (CH3)2NC6HN=CHCH2CH2 COCH3 | 547-58-0 | 1346 | | | | | CAB 37-6 | 10125 ML | 125 ML |
| 1082 | METHYL ORANGE XYLENE CYANOLE INDICATOR | | | | | | | | CAB 27-4 | 28500 ML | 1000 ML |
| 1075 | METHYL PURPLE INDICATOR | | | | | | | | CAB 27-3 | 601 QT | 6 QT |
| 1238 | METHYL RED | (CH3)2NC6H4N=N6H4CO2 NA | 845-10-3 | 1347 | | | | | CAB 13-2 | 6850 GM / 10113 GM | 413 GM |
| 1266 | METHYL RED HYDROCHLORIDE CRYSTAL | (CH3)2NC6H4N:NC6H4CO OH-HCL | 63451-28-5 | | | | | | CAB 13-3 | 1030 GM | 30 GM |
| 1239 | METHYL VIOLET | | 8004-87-3 | 1348 | POISION | | | | CAB 13-2 | 2010 GM | 20 GM |
| 1236 | METHYL3 -1-PHENYL 2-PYRAZOLIN-5-ONE | C6H5NN:C(CH3)CH2CO | 89-25-8 | 2042 | | | | | CAB 13-2 | 10100 GM | 100 GM |
| 1232 | METHYLENE BLUE | C16H18CLN3S-3H2O | 61-73-4 | 2282 | | | | | CAB 13-2 | 1025 GM | 25 GM |
| 1265 | METHYLENE BLUE | C16H18CLN3S-3H2O | 61-73-4 | 2282 | | | | | CAB 13-3 | 10100 GM | 100 GM |
| 643 | METHYLENE CHLORIDE | CH2CL2 | 75-09-2 | 1350 | POISON | Y | | | CAB 19-3 | 401 LITER | 4 LITER |
| 1235 | METOL | | | | | | | | CAB 13-2 | 40100 GM | 400 GM |
| 666 | MINERAL OIL | | 8012-95-1 | 2629 | | | | | CAB 20-3 | 101 GAL | 1 GAL |
| 1602 | MINERALS (MP-478 3A) | | | | | | | | CAB 21-2 | 3020 ML | 60 ML |
| 1601 | MINERALS (MP-478 4C) | | | | | | | | CAB 21-2 | 3020 ML | 60 ML |
| 1603 | MINERALS (MP478 3B ) | | | | | | | | CAB 21-2 | 5020 ML | 100 ML |
| 1633 | MINERALS MP384 CONC 1A | | | | | | | | CAB 21-5 | 1020 ML | 20 ML |
| 1634 | MINERALS MP384 CONC 1B | | | | | | | | CAB 21-5 | 1020 ML | 20 ML |
| 1635 | MINERALS MP384 CONC 1C | | | | | | | | CAB 21-5 | 1020 ML | 20 ML |
| 1630 | MINERALS MP478 CONC 3C | | | | | | | | CAB 21-5 | 5020 ML | 100 ML |
| 1631 | MINERALS MP478 CONC 4A | | | | | | | | CAB 21-5 | 3020 ML | 60 ML |
| 1632 | MINERALS MP478 CONC 4B | | | | | | | | CAB 21-5 | 3020 ML | 60 ML |

Table A-4. 222-SA Chemical Inventory by Common Name. (sheet 17 of 35)

| REC. | COMMON NAME | FORMULA | CAS NUMBER | MSDS # | CLASSIFICATION | C | P | MATRIX | LOCATION | UNITS/SIZE | TOTAL |
|---|---|---|---|---|---|---|---|---|---|---|---|
| 41 | MIX REA WASH SOL | | | | | | | | FRIG | 101 LITER | 1 LITER |
| 820 | MOLYBDENUM | MO | 7647-01-0 | | CORROSIVE | | | 10% HCL | CAB 23-3 | 3850 ML | 150 ML |
| 1506 | MOLYBDENUM | MO | | | | | | H2O | CAB 23-4 | 18500 ML | 500 ML |
| 1053 | MOLYBDENUM | MO | | | | | | H2O | CAB 27-1 | 18500 ML | 500 ML |
| 1453 | MOLYBDENUM | MO | 7439-98-7 | 2381 | | | | | 74 | 18100 GM | 100 GM |
| 228 | MOLYBDIC ACID | MOO3 | 7782-91-4 | 2342 | | | | | CAB 36 ARCHIVE | 38500 GM | 1500 GM |
| 229 | MONOCHLOROACETIC ACID | CH2ClCOOH | 79-11-8 | 1125 | POISON CORROSIV | | | | CAB 36 ARCHIVE | 18500 GM | 500 GM |
| 1114 | MUCILAGE (BLUE) | | | 11625 | | | | | CAB 32-2 | 18100 ML | 100 ML |
| 691 | MULTI ELEMENT | | | | CORROSIVE | Y | | 2% HNO3 | CAB 37 ARCHIVE | 28500 ML | 1000 ML |
| 778 | MULTI ELEMENT | | | | CORROSIVE | | | 10% HNO3 | CAB 23-1 | 28500 ML | 1000 ML |
| 794 | MULTI ELEMENT | | | | CORROSIVE | | | 20% HCL | CAB 37 ARCHIVE | 28500 ML | 1000 ML |
| 823 | MULTI ELEMENT | | | | CORROSIVE | | | 2% HNO3 | CAB 23-3 | 28500 ML | 1000 ML |
| 827 | MULTI ELEMENT | | | | | | | H2O | CAB 23-3 | 28500 ML | 1000 ML |
| 850 | MULTI ELEMENT | | | | CORROSIVE | | | 10% HNO3 | CAB 23-1 | 28500 ML | 1000 ML |
| 851 | MULTI ELEMENT | | | | CORROSIVE | | | 5% HNO3/1% HF | CAB 23-2 | 28500 ML | 1000 ML |
| 852 | MULTI ELEMENT | | | | CORROSIVE | | | 2% HNO3 | CAB 23-1 | 28500 ML | 1000 ML |
| 856 | MULTI ELEMENT | | | | CORROSIVE | | | 10% HCL | CAB 23-2 | 18500 ML | 500 ML |
| 858 | MULTI ELEMENT | | | | CORROSIVE | Y | | 5%HCL/5%HNO3 | CAB 23-2 | 18500 ML | 500 ML |
| 859 | MULTI ELEMENT | | | | CORROSIVE | | | 2% HNO3 | CAB 23-1 | 28500 ML | 1000 ML |
| 860 | MULTI ELEMENT | | | | CORROSIVE | Y | | 5% HCL/5%HNO3 | CAB 23-2 | 18500 ML | 500 ML |
| 861 | MULTI ELEMENT | | | | CORROSIVE | | | 10% HNO3 | CAB 23-2 | 58500 ML | 2500 ML |
| 862 | MULTI ELEMENT | | | | CORROSIVE | | | 2% HNO3 | CAB 23-1 | 28500 ML | 1000 ML |
| 866 | MULTI ELEMENT | | | | CORROSIVE | | | 10%HNO3 | CAB 23-2 | 28500 ML | 1000 ML |
| 914 | MULTI ELEMENT | | | | CORROSIVE | | | 5% HNO3 | CAB 22-4 | 28500 ML | 1000 ML |
| 936 | MULTI ELEMENT | | | | CORROSIVE | | | 2% HNO3 | CAB 23-4 | 18100 ML | 100 ML |
| 1065 | MULTI ELEMENT | | | | CORROSIVE | | | 10% HNO3 | CAB 37 ARCHIVE | 18500 ML | 500 ML |
| 1073 | MULTI ELEMENT | | | | CORROSIVE | | | 2% HNO3 | CAB 37 ARCHIVE | 18500 ML | 500 ML |
| 1079 | MULTI ELEMENT | | | | CORROSIVE | Y | | 5% HNO3 | CAB 37 ARCHIVE | 18500 ML | 500 ML |
| 1087 | MULTI ELEMENT | | | | CORROSIVE | Y | | 2% HNO3 | CAB 37 ARCHIVE | 28500 ML | 1000 ML |
| 1101 | MULTI ELEMENT | | | | CORROSIVE | | | 30% HNO3 | CAB 37 ARCHIVE | 18500 ML | 500 ML |
| 1119 | MULTI ELEMENT | | | | | | | | CAB 37 ARCHIVE | 18250 ML | 250 ML |
| 1312 | MULTI ELEMENT | | | | CORROSIVE | | | 30% HCL | CAB 37 ARCHIVE | 18500 ML | 500 ML |
| 1327 | MULTI ELEMENT | | | | CORROSIVE | Y | | 2% HNO3 | CAB 37 ARCHIVE | 18250 ML | 250 ML |
| 1362 | MULTI ELEMENT | | | | CORROSIVE | | | 5% HNO3 | CAB 37 ARCHIVE | 18500 ML | 500 ML |
| 1587 | MULTI ELEMENT | | | | CORROSIVE | | | 10% HCL | CAB 27-1 | 18500 ML | 500 ML |
| 1240 | MUREXIDE | | | | | | | | CAB 13-2 | 1810 GM | 10 GM |
| 1094 | N,N-DIMETHYL-P-PHENYLENEDIAMINE | C8H12N2 | 99-98-9 | 3205 | POISON | | | | CAB 37 ARCHIVE | 18125 ML | 125 ML |
| 1242 | N-1-NAPHTHYLETHYLENEDIAMINE DIHYDROCHLORIDE | C10H7NHCH2CH2NH2-2HCL | 1465-25-4 | | | | | | CAB 13-2 | 181 GM | 1 GM |
| 628 | N-BUTYL-ALCOHOL | CH3(CH2)2CH2OH | 71-36-3 | 1371 | FLAMMABLE | | | | CAB 19-1 | 18500 ML | 500 ML |
| 669 | N-TRIDECANE | CH3(CH2)11CH3 | 629-50-5 | 2069 | | | | | CAB 20-3 | 18100 GM | 100 GM |
| 1556 | NAPHTHOL-2-3,6-DISULFONIC ACID DISODIUM SALT | C10H6O7S2 | | | | | | | CAB 36 ARCHIVE | 28250 GM / 28100 GM | 700 GM |
| 1248 | NAPHTHYLAMINE 1-7 SULFONIC ACID | H2NC10H6SO3NA-H2O | | | | | | | CAB 13-2 | 28100 GM | 200 GM |
| 1276 | NAPHTHYLAMINE-1-7 SULFONIC ACID | H2NC10H6SO3NA-H2O | | | | | | | CAB 13-3 | 28100 GM | 200 GM |
| 832 | NEODYMIUM | ND | 7647-01-0 | | CORROSIVE | | | 10% HCL | CAB 23-3 | 1850 ML | 50 ML |
| 864 | NEODYMIUM | ND | | | CORROSIVE | | | 2% HNO3 | CAB 23-4 | 28500 ML | 1000 ML |
| 903 | NEODYMIUM | ND | | | CORROSIVE | | | 2% HNO3 | CAB 22-3 | 18500 ML | 500 ML |
| 1455 | NEODYMIUM OXIDE | ND2O3 | 1313-97-9 | 1374 | | | | | 74 | 1850 GM / 18100 GM | 150 GM |
| 719 | NICKEL | NI | 7440-02-0 | 2093 | FLAMMABLE | Y | | | CAB 7-2 | 18.3 GM | .3 GM |
| 727 | NICKEL | NI | | | | | | | CAB 23-3 | 1850 ML | 50 ML |

Table A-4. 222-SA Chemical Inventory by Common Name. (sheet 18 of 35)

| REC. | COMMON NAME | FORMULA | CAS NUMBER | HSDS # | CLASSIFICATION | C | P | MATRIX | LOCATION | UNITS/SIZE | TOTAL |
|---|---|---|---|---|---|---|---|---|---|---|---|
| 772 | NICKEL | NI | | | CORROSIVE | Y | | | CAB 37 ARCHIVE | 20100 ML | 200 ML |
| 800 | NICKEL | NI | 7697-37-2 | | CORROSIVE | Y | | 10% HNO3 | CAB 23-3 | 1050 ML | 50 ML |
| 847 | NICKEL | NI | | | CORROSIVE | Y | | 2% HNO3 | CAB 23-4 | 20500 ML | 1000 ML |
| 1058 | NICKEL | NI | | | | Y | | | CAB 37 ARCHIVE | 10125 ML | 125 ML |
| 1454 | NICKEL CYCLOHEXANE-BUTYRATE | NI(O2C10H1712 | 3906-55-6 | | | Y | | | 74 | 165 GM | 5 GM |
| 376 | NICKEL OXIDE | NIO | 1313-99-1 | 2410 | POISON | Y | | | CAB 36 ARCHIVE | 1010 GM | 10 GM |
| 725 | NICKEL PIECES | NI | 7440-02-0 | 2093 | FLAMMABLE SOLID | Y | | | CAB 7-2 | 20250 GM | 500 GM |
| 718 | NICKEL WIRE | NI | 7440-02-0 | 2093 | FLAMMABLE SOLID | Y | | | CAB 7-2 | 10430 GM /10360 GM | 810 GM |
| 230 | NICKELOUS NITRATE | NI(NO3)2-6H2O | 13138-45-9 | 1379 | OXIDIZER | Y | | | CAB 4-1 | 40500 GM | 2000 GM |
| 410 | NICKELOUS NITRATE | NI(NO3)2-6H2O | 13138-45-9 | 1379 | OXIDIZER | Y | | | CAB 8-5 | 10500 GM | 500 GM |
| 1459 | NICKELOUS NITRATE | NI(NO3)2-6H2O | 13138-45-9 | 1379 | OXIDIZER | Y | | | CAB 36 ARCHIVE | 20500 GM | 1000 GM |
| 232 | NICKELOUS SULFATE | NISO4-6H2O | 10101-97-0 | 1381 | POISON | Y | | | CAB 36 ARCHIVE | 10125 GM | 125 GM |
| 233 | NICKELOUS SULFATE | NISO4-6H2O | 10101-97-0 | 1381 | POISON | Y | | | CAB 4-1 | 20500 GM | 1000 GM |
| 1456 | NIOBIUM CARBIDE | NBC | 12069-94-2 | | | | | | 74 | 1025 GM | 25 GM |
| 520 | NIOBIUM CHLORIDE | NB | 7440-03-1 | | CORROSIVE | | | | CAB 12-5 | 10100 GM | 100 GM |
| 1457 | NIOBIUM METAL | NB | 7440-03-1 | | FLAMMABLE | | | | 74 | 1050 GM | 50 GM |
| 3 | NITRIC ACID | HNO3 | 7697-37-2 | 1384 | CORROSIVE POISO | | Y | | 143 | 202.5 LITERS | 5 LITERS |
| 6 | NITRIC ACID | HNO3 | 7697-37-2 | 1384 | CORROSIVE POISO | | Y | | 143 | 40500 ML | 2000 ML |
| 15 | NITRIC ACID | HNO3 | 7697-37-2 | 1384 | CORROSIVE POISO | | Y | | HD 4 | 10250 ML / 10500 GM | 750 ML |
| 577 | NITRIC ACID | HNO3 | 7697-37-2 | 1384 | CORROSIVE POISO | | Y | | CAB 2 UNDER SINK | 140500 ML | 7000 ML |
| 580 | NITRIC ACID | HNO3 | 7697-37-2 | 1384 | CORROSIVE POISO | | | | ON TOP OF DRB 33 | 80500 ML | 4000 ML |
| 1392 | NITRIC ACID | HNO3 | 7697-37-2 | 1384 | POISON CORROSIV | | Y | | ORGANIC BNCH TOP | 762500 ML / 10500 ML | 18000 ML |
| 1497 | NITRIC ACID | HNO3 | 7697-37-2 | 1384 | POISON CORROSIV | | Y | | CAB 34-4 | 10250 ML | 4000 ML |
| 654 | NITROBENZENE | C6H5NO2 | 98-95-3 | 2050 | POISON | | | | CAB 20-1 | 481 PT. | 4 PINTS |
| 1243 | NITRON | C20H16N4 | 2218-94-2 | | | | | | CAB 13-2 | 102 GM | 2 GM |
| 1244 | NITROSO 1-2-NAPHTHOL | ONC10H6OH | 131-91-9 | 1723 | | | | | CAB 13-2 | 10100 GM | 100 GM |
| 525 | NORMAL PARRAFIN HYDROCARBON | NPH | | 387 | FLAMMABLE | | | | 68 | 1020 LITERS / 287 LITERS | 34 LITERS |
| 298 | O-TOLIDINE | 4-(H2N)C6H3CH3C6H3CH 3-4NH2-2HCL-H2O | 612-82-8 | 1400 | POISON | Y | | | CAB 36 ARCHIVE | 101000 GM | 1000 GM |
| 350 | O-TOLIDINE DIYHDROCHLORIDE | (3,4-CH3(H2N)C6H3)2-2HCL | | 1401 | POISON | Y | | | CAB 36 ARCHIVE | 10125 GM | 125 GM |
| 1592 | OIL PENENTRATING | | | | | | | | CAB 21-7 | 1015 OZ. | 15 OZ. |
| 610 | OSMIUM TETROXIDE | OSO4 | 20816-12-0 | | POISON | | | .1 SO4 | HD 81 | 3025 ML / 10100 ML | 175 ML |
| 595 | OSMIUM TETROXIDE SOL | OSO4 | 20816-12-0 | | POISON | | | | N CMTR | 10100 ML | 100 ML |
| 234 | OXALIC ACID | HOCOCOOH-2H2O | 144-62-7 | 1729 | POISON CORROSIV | | Y | | CAB 4-1 | 30500 GM | 1500 GM |
| 499 | OXALIC ACID | HOCOCOOH-2H2O | 144-62-7 | 1729 | POISON CORROSIV | | Y | | CAB 8-5 | 10500 GM | 500 GM |
| 1155 | OXALIC ACID | HOCOCOOH-2H2O | 144-62-7 | 1729 | POISON CORROSIV | | Y | | CAB 31-3 | 10500 GM | 500 GM |
| 593 | OXYGEN | O2 | 7782-44-7 | 1406 | OXIDIZER | | | | N CMTR | 102 LB | 2 LB |
| 1193 | P DAB | (CH3)2NC6H4CHO | 100-10-7 | | | | | | CAB 13-1 | 10500 GM / 10100 GM | 600 GM |
| 1557 | P DAB | (CH3)2NC6H4CHO | 100-10-7 | | | | | | CAB 3-1 | 6025 GM/ 10500 GM | 550 GM |
| 1660 | P DAB | (CH3)2NC6H4CHO | 100-10-7 | | | | | | CAB 36 ARCHIVE | 10500 GM | 500 GM |
| 1181 | P-AMINOBENZOIC ACID | H2NC6H4CO2H | 150-13-0 | 1709 | | | | | CAB 13-1 | 1050 GM | 50 GM |
| 1203 | P-BROMOMANDELIC ACID | BRC6H4CH(OH)CO2H | 6940-50-7 | | | | | | CAB 13-3 | 2010 GM | 20 GM |
| 1250 | P-PHENYLAZOBENZOYL CHLORIDE | C6H5NINC6H4COCL | | | | | | | CAB 13-2 | 10100 GM | 100 GM |
| 791 | PALLADIUM | PD | | | CORROSIVE | | | 10% HCL | CAB 37 ARCHIVE | 10500 ML | 500 ML |
| 872 | PALLADIUM | PD | | | CORROSIVE | | | 10% HCL | CAB 22-2 | 10500 ML | 500 ML |
| 483 | PALLADIUM CHLORIDE | PDCL2 | 7647-10-1 | 2346 | POISON | | | | CAB 12-3 | 3025 GM | 75 GM |
| 1458 | PALLADIUM CHLORIDE | PDCL2 | 7647-10-1 | 2346 | POISON | | | | 74 | 1050 GM / 1010 GM | 60 GM |
| 469 | PALLIDIUM II CHLORIDE | PDCL2 | 7647-10-1 | 2346 | POISON | | | | DESC 2 | 1025 | 25 GM |
| 537 | PALMOLIVE DISH SOAP | | | | | | | | UNDER KITCHEN SINK | 2022 OZ. | 44 OZ. |

Table A-4. 222-SA Chemical Inventory by Common Name. (sheet 19 of 35)

| REC. | COMMON NAME | FORMULA | CAS NUMBER | NSCS # | CLASSIFICATION | C | P | MATRIX | LOCATION | UNITS/SIZE | TOTAL |
|---|---|---|---|---|---|---|---|---|---|---|---|
| 544 | PAM VEG COOKING SPRAY | | | | | | | | KITCHEN CABINET | 2814 OZ. | 28 OZ. |
| 670 | PARAFIN OIL | | 8012-95-1 | 2629 | | | | | CAB 20-3 | 101 LITER | 1 LITER |
| 1646 | PARTICLE SIZE 10 MICRON | | | | | | | | CAB 21-5 | 1015 ML | 15 ML |
| 1643 | PARTICLE SIZE 102 MICRON | | | | | | | | CAB 21-5 | 1015 ML | 15 ML |
| 1648 | PARTICLE SIZE 251 MICRON | | | | | | | | CAB 21-5 | 28200 GM | 400 GM |
| 1649 | PARTICLE SIZE 499 MICRON | | | | | | | | CAB 21-5 | 28200 GM | 400 GM |
| 1645 | PARTICLE SIZE 600 NANOMETER | | | | | | | | CAB 21-5 | 1015 ML | 15 ML |
| 1644 | PARTICLE SIZE 700 NANOMETER | | | | | | | | CAB 21-5 | 1015 ML | 15 ML |
| 1647 | PARTICLE SIZE 800 NANOMETER | | | | | | | | CAB 21-5 | 1015 ML | 15 ML |
| 1590 | PESTICIDE (MISTY) | | | | | | | | CAB 21-7 | 1016 OZ. | 16 OZ. |
| 37 | PETROLEUM ETHER | | 8032-32-4 | 2039 | POISON FLAMMABL | | Y | | FR16 | 38500 ML | 1500 ML |
| 645 | PETROLEUM ETHER | | 8032-32-4 | 2039 | POISON FLAMMABL | | Y | | CAB 19-4 | 100 PT | 8 PINT |
| 955 | PH STD | KH2PO4 | | | | | | | DESC 1 | 105 GM | 5 GM |
| 956 | PH STD | NA2HPO4 | | | | | | | DESC 1 | 105 GM | 5 GM |
| 957 | PH STD | KH | | | | | | | DESC 1 | 105 GM | 5 GM |
| 958 | PH STD | KF | | | | | | | DESC 1 | 105 GM | 5 GM |
| 959 | PH STD | KHP | | | | | | | DESC 1 | 1020 GM | 20 GM |
| 1267 | PHENANTHROLINE | C12H8N2 | 66-71-7 | 1421 | POISON | | | | CAB 13-3 | 2010 GM | 20 GM |
| 1246 | PHENANTHROLINE 1-10 MONOHYDRATE | C12H8N2-H2O | 5144-89-8 | 1421 | POISON | | | | CAB 13-2 | 4050 GM | 200 GM |
| 1107 | PHENANTHROLINE FERROUS SULFATE 1-10 | [(C12H8N2)3FE]SO4 | | 1421 | POISON | | | | CAB 37 ARCHIVE | 28125 ML | 250 ML |
| 13 | PHENANTHROLINE FERROUS SULFATE SOL'N 1-10 | [(CL2H8N2)3FE]SO4 | | | | | | | CAB 27-3 | 48160 ML | 400 ML |
| 1099 | PHENANTHROLINE FERROUS SULFATE-10 | [(C12H8N3)3FE]SO4 | | | | | | | CAB 37 ARCHIVE | 18125 ML | 125 ML |
| 235 | PHENOL | C6H5OH | 108-95-2 | 1422 | POISON | | | | CAB 36 ARCHIVE | 34200 GM | 600 GM |
| 236 | PHENOL | C6H5OH | 108-95-2 | 1422 | POISON | | | | CAB 4-2 | 28500 GM | 1000 GM |
| 303 | PHENOL | C6H2OH | 108-95-2 | 1422 | POISON | | | | CAB 6-4 | 178500 GM | 8500 GM |
| 443 | PHENOL | C6H2OH | 108-95-2 | 1422 | POISON | | Y | | CAB 37 ARCHIVE | 18500 ML | 500 ML |
| 332 | PHENOL HYDRAZINE | | | | | | | | CAB 37 ARCHIVE | 18125 ML | 125 ML |
| 1249 | PHENOL RED | C19H14O5S | 143-74-8 | 1423 | | | | | CAB 13-2 | 3825 GM / 101 GM | 76 GM |
| 1259 | PHENOL RED SODIUM SALT | C19H14O5S | 143-74-8 | 1423 | | | | | CAB 13-2 | 105 GM | 5 GM |
| 1247 | PHENOLPHTHALEIN | C20H14O4 | 77-09-8 | 2998 | POISON FLAMMABL | | | | CAB 13-2 | 1050 GM / 1025 GM | 75 GM |
| 1251 | PHENYLMERCURIC ACETATE | C6H5OCOCH3 | 62-38-4 | | POISON | | | | CAB 13-2 | 10100 GM | 100 GM |
| 834 | PHOSPHATE | PO4 | 7778-77-0 | 16515 | CORROSIVE | | | H2O | CAB 23-4 | 10500 ML | 500 ML |
| 1662 | PHOSPHATE | PO4 | 7778-77-0 | 16515 | CORROSIVE | | | H2O | CAB 37 ARCHIVE | 128100 ML | 1200 ML |
| 803 | PHOSPHOROUS | P | 7647-01-0 | | CORROSIVE | | | .05% HCL | CAB 23-3 | 3850 ML | 150 ML |
| 853 | PHOSPHOROUS | P | 7647-01-0 | | CORROSIVE | | | | CAB 23-3 | 1050 ML | 50 ML |
| 238 | PHOSPHOROUS ACID | H3PO3 | 13598-36-2 | | CORROSIVE | | | | CAB 6-2 | 38500 GM | 1500 GM |
| 1145 | PHOSPHOROUS PENTOXIDE | P2O5 | 1314-56-3 | 1430 | POISON | | Y | | CAB 36 ARCHIVE | 18500 GM | 500 GM |
| 237 | PHOSPHOTUNGSTIC ACID | P2O5-24WO3-H2O | 12067-99-1 | 2349 | CORROSIVE | | | | CAB 36 ARCHIVE | 18125 GM | 125 GM |
| 239 | PHTHALIC ACID | C6H4-1,2-(CO2H)2 | 88-99-3 | | | | | | CAB 6-2 | 18500 GM | 500 GM |
| 1552 | PHYDRION PELLETS | | | | | | | | 147 | 66810 CAPS./TUBE | 660 CAPS. |
| 1252 | PONTACHROME BLUE BLACK | | | | | | | | CAB 13-2 | 1050 GM | 50 GM |
| 1608 | PORTLAND CEMENT BLUE CAP | NBS 635 | | | | | | | CAB 21-2 DESC. | 283 VIALS | 6 VIALS |
| 1609 | PORTLAND CEMENT GREEN CAP | NBS 638 | | | | | | | CAB 21-2 DESC. | 182 VIALS/ 183 VIALS | 5 VIALS |
| 385 | POSTASSIUM OXALATE SAT'D | KOH | | | CORROSIVE | | | | CAB 37 ARCHIVE | 18250 ML | 250 ML |
| 521 | POTASSIUM | K | | | CORROSIVE | | | 2% HNO3 | CAB 37 ARCHIVE | 28500 ML | 1000 ML |
| 812 | POTASSIUM | K | 7647-01-0 | | CORROSIVE | | | 1% HCL | CAB 23-3 | 1050 ML | 50 ML |
| 848 | POTASSIUM | K | | | CORROSIVE | | | 2% HNO3 | CAB 23-4 | 28500 ML | 1000 ML |
| 898 | POTASSIUM | K | | | CORROSIVE | | | 2% HNO3 | CAB 22-3 | 18500 ML | 500 ML |
| 1463 | POTASSIUM | K | | | | | | | CAB 23-3 | 1050 ML | 50 ML |
| 240 | POTASSIUM ACETATE | CH3COOK | 127-08-2 | 2304 | | | | | CAB 6-2 | 28500 GM | 1000 GM |

Table A-4. 222-SA Chemical Inventory by Common Name. (sheet 20 of 35)

| REC. | COMMON NAME | FORMULA | CAS NUMBER | HSDB # | CLASSIFICATION | C | P | MATRIX | LOCATION | UNITS/SIZE | TOTAL |
|---|---|---|---|---|---|---|---|---|---|---|---|
| 1142 | POTASSIUM ACID PHTHALATE | KHC8H4O4 | 877-24-7 | 1440 | | | | | CAB 31-2 | 1@1/4 LB | 1/4 LB |
| 1298 | POTASSIUM ACID PHTHALATE | KHC8H4O4 | 877-24-7 | 1440 | | | | | CAB 13-4 | 7@100 GM | 700 GM |
| 1141 | POTASSIUM DICHROMATE | KBRO3 | | 1434 | POISON | Y | | | CAB 36 ARCHIVE | 1@500 GM | 500 GM |
| 241 | POTASSIUM DIPHTHALATE | 1-KOCOC8H4-2-COOH | 877-24-7 | 1440 | CORROSIVE | | | | CAB 4-2 | 1@500 GM | 500 GM |
| 460 | POTASSIUM DIPHTHALATE | 1-KOCOC8H4-2-COOH | 877-24-7 | 1440 | CORROSIVE | | | | CAB 9-6 | 40@500 GM | 10000 GM |
| 243 | POTASSIUM BISULFATE | KHSO4 | 7646-93-7 | 2305 | CORROSIVE | | | | CAB 36 ARCHIVE | 1@500 GM | 500 GMR |
| 294 | POTASSIUM BISULFATE | KHSO4 | 7646-93-7 | 2305 | CORROSIVE | | | | CAB 4-8 | 50@500 GM | 5000 GM |
| 244 | POTASSIUM BROMATE | KBRO3 | 7758-01-2 | 2306 | POISON OXIDIZER | | | | CAB 4-2 | 1@125 GM | 125 GM |
| 245 | POTASSIUM BROMIDE | KBR | 7758-02-3 | 1668 | | | | | CAB 4-2 | 1@500 GM | 500 GM |
| 246 | POTASSIUM CARBONATE | K2CO3 | 584-08-7 | 2875 | | | | | CAB 4-2 | 5@500 GM | 2500 GM |
| 1661 | POTASSIUM CARBONATE | K2CO3 | 584-08-7 | 2875 | | | | | CAB 36 ARCHIVE | 1@500 GM | 500 GM |
| 1149 | POTASSIUM CARBONATE ANHYDROUS | K2CO3 | 584-08-7 | 2875 | | | | | CAB 36 ARCHIVE | 3@500 GM | 1500 GM |
| 248 | POTASSIUM CHLORATE | KCLO3 | 3811-04-9 | 2307 | OXIDIZER | | | | CAB 4-2 | 1@500 GM | 500 GM |
| 249 | POTASSIUM CHLORIDE | KCL | 7447-40-7 | 1790 | | | | | CAB 4-3 | 5@500 GM | 2500 GM |
| 366 | POTASSIUM CHLORIDE | KCL | 7447-40-7 | 1790 | | | | | DESC 1 | 1@10 GM | 10 GM |
| 423 | POTASSIUM CHLORIDE | KCL | 7447-40-7 | 1790 | | | | | CAB 9-2 | 1@500 GM | 500 GM |
| 482 | POTASSIUM CHLORIDE | KCL | 7447-40-7 | 1790 | | | | | CAB 12-3 | 3@100 GM | 300 GM |
| 505 | POTASSIUM CHLORIDE | KCL | 7447-40-7 | 1790 | | | | | CAB 12-4 | 1@100 GM | 100 GM |
| 963 | POTASSIUM CHLORIDE | KCL | 7447-40-7 | 1790 | | | | | DESC 2 | 1@100 GM / 2@50 GM | 200 GM |
| 143 | POTASSIUM CHLORIDE | KCL | 7447-40-7 | 1790 | | | | | CAB 31-2 | 5@500 GM | 500 GM |
| 289 | POTASSIUM CHLORIDE | KCL | 7447-40-7 | 1790 | | | | | CAB 13-4 | 5@100 GM | 500 GM |
| 586 | POTASSIUM CHLORIDE | KCL | 7447-40-7 | 1790 | | | | | DESC 8 | 1@25 GM | 25 GM |
| 526 | POTASSIUM CHLOROPLATINATE | K2PTCL6 | 16921-30-5 | | | | | | CAB 36 ARCHIVE | 1@5 GM / 1@100 GM | 105 GM |
| 927 | POTASSIUM CHROMATE | K2CRO4 | 7789-00-6 | 1533 | | | | | CAB 36 ARCHIVE | 1@50 GM | 50 GM |
| 251 | POTASSIUM CITRATE | HOC(COOK)(CH2COOK)2-H2O | 6100-05-6 | 2308 | | | | | CAB 4-3 | 2@250 GM | 500 GM |
| 293 | POTASSIUM COBALTICYANIDE | K3CO(CN)6 | | | POISON | | | | CAB 36 ARCHIVE | 1@410 GM / 1@500 GM | 910 GM |
| 253 | POTASSIUM CYANIDE | KCN | 151-50-8 | 1437 | POISON | Y | | | CAB 4-3 | 1@500 GM | 500 GM |
| 425 | POTASSIUM CYANIDE | KCN | 151-50-8 | 1437 | POISON | Y | | | CAB 36 ARCHIVE | 1@500 GM | 500 GM |
| 424 | POTASSIUM DICHROMATE | K2CR2O7 | 7778-50-9 | 1434 | POISON CORROSIV | Y | | | CAB 9-2 | 1@2500 GM / 1@500 GM | 3000 GM |
| 950 | POTASSIUM DICHROMATE | K2CR2O7 | 7778-50-9 | 1434 | POISON CORROSIV | Y | | | DESC 1 | 1@50 GM / 1@30 GM / 1@2 GM | 82 GM |
| 147 | POTASSIUM DICHROMATE | K2CR2O7 | 7778-50-9 | 1434 | POISON CORROSIV | Y | | | CAB 31-3 | 1@500 GM | 500 GM |
| 286 | POTASSIUM DICHROMATE | K2CR2O7 | 7778-50-9 | 1434 | POISON CORROSIV | Y | | | CAB 13-4 | 1@16GM/1@100GM/ 1@10 GM | 1@116GM |
| 308 | POTASSIUM DICHROMATE | K2CR2O7 | 7778-50-9 | 1434 | POISON CORROSIV | Y | | | CAB 37 ARCHIVE | 2@125 ML | 250 ML |
| 588 | POTASSIUM DICHROMATE | K2CR2O7 | 7778-50-9 | 1434 | POISON CORROSIV | Y | | | TITRATION BENCHTOP | 1@25 ML | 25 ML |
| 672 | POTASSIUM DICHROMATE | K2CR2O7 | 7778-50-9 | 1434 | POISON CORROSIV | Y | | | CAB 36 ARCHIVE | 2@500 GM | 1000 GM |
| 256 | POTASSIUM DIHYDROGEN ARSENATE | ASH2KO4 | | | POISON | | | | CAB 36 ARCHIVE | 1@250 GM | 250 GM |
| 566 | POTASSIUM DIHYDROGEN PHOSPHATE | KH2PO4 | 7778-77-0 | 1786 | | | | | CAB 12-4 | 1@25 GM | 25 GM |
| 316 | POTASSIUM DIHYDROGEN PHOSPHATE | KH2PO4 | 7778-77-0 | 1786 | | | | | DESC 6 | 1@25 GM | 25 GM |
| 291 | POTASSIUM DIHYDROGEN PHOSPHATE | KH2PO4 | 7778-77-0 | 1786 | | | | | CAB 13-4 | 2@50 GM | 100 GM |
| 254 | POTASSIUM FERRICYANIDE | K3FE(CN)6 | 13746-66-2 | 1703 | POISON | | | | CAB 36 ARCHIVE | 2@500 GM | 1000 GM |
| 397 | POTASSIUM FLUORIDE | KF | 7789-23-3 | 1771 | POISON CORROSIV | | | | DESC 4 | 1@25 GM / 2@100 GM | 225 GM |
| 252 | POTASSIUM FLUORIDE | KF | 7789-23-3 | 1771 | POISON CORROSIV | | | | CAB 4-3 | 12@500 GM | 6000 GM |
| 427 | POTASSIUM FLUORIDE | KF | 7789-23-3 | 1771 | POISON CORROSIV | | | | CAB 9-2 | 1@500 GM | 500 GM |
| 167 | POTASSIUM FLUORIDE | KF | 7789-23-3 | 1771 | POISON CORROSIV | | | | CAB 31-3 | 10@500 GM | 5000 GM |
| 290 | POTASSIUM FLUORIDE | KF | 7789-23-3 | 1771 | POISON CORROSIV | | | | CAB 13-4 | 2@50 GM | 100 GM |
| 155 | POTASSIUM HEXAFLUOROTITANATE | K2TIF6 | 16919-27-0 | | | | | | CAB 36 ARCHIVE | 1@500 GM | 500 GM |
| 242 | POTASSIUM HYDROGEN PHTHALATE | HOCOC6H4COOK | 877-24-7 | 1440 | CORROSIVE | | | | CAB 4-2 | 1@500 GM | 500 GM |
| 184 | POTASSIUM HYDROGEN PHTHALATE | KHC8H4O4 | 877-24-7 | 1440 | CORROSIVE | | | | CAB 12-3 | 1@250 GM | 250 GM |
| 761 | POTASSIUM HYDROGEN PHTHALATE | 1-KOCOC8H4-2-COOH | 877-24-7 | 1440 | CORROSIVE | | | | DESC 1 | 1@50 GM / 1@30 GM / 1@100 GM | 180 GM |

Table A-4. 222-SA Chemical Inventory by Common Name. (sheet 21 of 35)

| SEC. | COMMON NAME | FORMULA | CAS NUMBER | MSDS # | CLASSIFICATION | C | P | MATRIX | LOCATION | UNITS/SIZE | TOTAL |
|---|---|---|---|---|---|---|---|---|---|---|---|
| 1302 | POTASSIUM HYDROGEN PHTHALATE | 1-KOCOCBH4-2-COOH | 877-24-7 | 1440 | CORROSIVE | | | | CAB 13-4 | 40100 GM | 400 GM |
| 951 | POTASSIUM HYDROGEN PHTHALATE PH STD | 1-KOCOCBH4-2-COOH | 877-24-7 | 1440 | CORROSIVE | | | | DESC 1 | 105 GM | 5 GM |
| 1292 | POTASSIUM HYDROGEN TARTRATE | (KHC4H4O6) | 921-53-9 | 2356 | CORROSIVE | | | | CAB 13-4 | 20100 GM | 300 GM |
| 44 | POTASSIUM HYDROXIDE | KOH | 1310-58-3 | 1442 | CORROSIVE POISO | | | | 95 | 304 LITERS | 12 LITERS |
| 454 | POTASSIUM HYDROXIDE | KOH | 1310-58-3 | 1442 | POISON CORROSIV | | | | CAB 9-2 | 10500 GM | 500 GM |
| 1140 | POTASSIUM HYDROXIDE | KOH | 1310-58-3 | 1442 | CORROSIVE POISO | | | | CAB 31-2 | 120500 GM | 6000 GM |
| 1338 | POTASSIUM HYDROXIDE | KOH | 1310-58-3 | 1442 | POISON CORROSIV | | | | CAB 37 ARCHIVE | 1050 ML | 50 ML |
| 211 | POTASSIUM IODATE | KIO3 | 7758-05-6 | 2258 | OXIDIZER | | | | CAB 3-7 | 120500 GM | 6000 GM |
| 257 | POTASSIUM IODATE | KIO3 | 7758-05-6 | 2258 | OXIDIZER | | | | CAB 4-4 | 88125 GM / 10100 GM | 1100 GM |
| 428 | POTASSIUM IODATE | KIO3 | 7758-05-6 | 2258 | OXIDIZER | | | | CAB 9-2 | 10125 GM | 125 GM |
| 973 | POTASSIUM IODATE | KIO3 | 7758-05-6 | 2258 | OXIDIZER | | | | DESC 3 | 102 GM / 1010 GM | 12 GM |
| 1078 | POTASSIUM IODATE | KIO3 | 7758-05-6 | 2258 | OXIDIZER | | | | CAB 37 ARCHIVE | 10100 ML/1050 ML | 150 ML |
| 1100 | POTASSIUM IODATE | KIO3 | 7758-05-6 | 2258 | OXIDIZER | | | | CAB 37 ARCHIVE | 10100 ML | 100 ML |
| 1146 | POTASSIUM IODATE | KIO3 | 7758-05-6 | 2258 | OXIDIZER | | | | CAB 36 ARCHIVE | 10500 GM / 10100 GM | 600 GM |
| 1385 | POTASSIUM IODATE | KIO3 | 7758-05-6 | 2258 | OXIDIZER | | | | CAB 27-3 | 1025 ML | 25 ML |
| 259 | POTASSIUM IODIDE | KI | 7681-11-0 | 1745 | | | | | CAB 4-4 | 40500 GM / 10250 GM | 2250 GM |
| 429 | POTASSIUM IODIDE | KI | 7681-11-0 | 1745 | | | | | CAB 9-2 | 20500 GM | 1000 GM |
| 974 | POTASSIUM IODIDE | KI | 7681-11-0 | 1745 | | | | | DESC 3 | 102 GM | 2 GM |
| 1011 | POTASSIUM IODIDE | KI | 7681-11-0 | 1745 | | | | | DESC 5 | 1025 GM | 25 GM |
| 1663 | POTASSIUM IODIDE | KI | 7681-11-0 | 1745 | | | | | CAB 36 ARCHIVE | 10500 GM | 500 GM |
| 1414 | POTASSIUM IODIDE / POTASSIUM IODATE | KI/KIO3 | | | | | | | CAB 34-6 | 104000 ML | 4000 ML |
| 261 | POTASSIUM NITRATE | KNO3 | 7757-79-1 | 1619 | OXIDIZER | | | | CAB 4-4 | 20500 GM | 1000 GM |
| 430 | POTASSIUM NITRATE | KNO3 | 7757-79-1 | 1619 | OXIDIZER | | | | CAB 9-2 | 10500 GM | 500 GM |
| 1150 | POTASSIUM NITRATE | KNO3 | 7757-79-1 | 1619 | OXIDIZER | | | | CAB 36 ARCHIVE | 30500 GM | 1500 GM |
| 262 | POTASSIUM NITRITE | KNO2 | 7758-09-0 | 2787 | OXIDIZER/POISON | | | | CAB 4-4 | 40500 GM | 2000 GM |
| 264 | POTASSIUM OXALATE | K2C2O4-H2O | 6487-48-5 | 1444 | CORROSIVE | | | | CAB 4-4 | 30500 GM | 1500 GM |
| 602 | POTASSIUM OXALATE SAT'D | | 583-52-8 | 2353 | | | | | CNTR NO.END | 10250 ML | 250 ML |
| 1323 | POTASSIUM OXALATE SAT'D | | 583-52-8 | 2353 | | | | | CAB 37 ARCHIVE | 10250 ML | 250 ML |
| 925 | POTASSIUM PERIODATE | KIO4 | 7790-21-8 | 1701 | OXIDIZER | | | | CAB 36 ARCHIVE | 20100 GM | 200 GM |
| 265 | POTASSIUM PERMANGANATE | KMNO4 | 7722-64-7 | 1445 | OXIDIZER CORROS | | | | CAB 4-4 | 120 500 GM | 6000 GM |
| 431 | POTASSIUM PERMANGANATE | KMNO4 | 7722-64-7 | 1445 | OXID CORROSIVE | | | | CAB 9-3 | 30500 GM | 1500 GM |
| 949 | POTASSIUM PERMANGANATE | KMNO4 | 7722-64-7 | 1445 | CORROSIVE OXIDI | | | | 153 | 188 LITERS | 8 LITERS |
| 1139 | POTASSIUM PERMANGANATE | KMNO4 | 7722-64-7 | 1445 | OXIDIZER CORROS | | | | CAB 31-2 | 120500 GM | 6000 GM |
| 1148 | POTASSIUM PERMANGANATE | KMNO4 | 7722-64-7 | 1445 | OXIDIZER CORROS | | | | CAB 36 ARCHIVE | 20500 GM | 1000 GM |
| 266 | POTASSIUM PERSULFATE | K2S2O8 | 7727-21-1 | 1446 | OXIDIZER | | | | CAB 4-5 | 50500 GM | 2500 GM |
| 432 | POTASSIUM PERSULFATE | K2S2O8 | 7727-21-1 | 1446 | OXIDIZER | | | | CAB 9-3 | 10500 GM | 500 GM |
| 1152 | POTASSIUM PERSULFATE | K2S2O8 | 7727-21-1 | 1446 | OXIDIZER | | | | CAB 36 ARCHIVE | 10500 GM | 500 GM |
| 267 | POTASSIUM PHOSPHATE | KH2PO4 | 7778-77-0 | 1786 | | | | | CAB 4-5 | 60500 GM | 3000 GM |
| 295 | POTASSIUM PHOSPHATE | K2HPO4 | 7778-77-0 | 1786 | | | | | CAB 36 ARCHIVE | 2011340 GM | 22680 GM |
| 433 | POTASSIUM PHOSPHATE | KH2PO4 | 7778-77-0 | 1786 | | | | | CAB 9-3 | 30500 GM / 102500 GM | 4000 GM |
| 982 | POTASSIUM PHOSPHATE | KH2PO4 | 7778-77-0 | 1786 | | | | | DESC 3 | 1025 GM / 1010 GM | 35 GM |
| 1151 | POTASSIUM PHOSPHATE | KH2PO4 | 7778-77-0 | 1786 | | | | | CAB 31-3 | 20500 GM | 500 GM |
| 1665 | POTASSIUM PHOSPHATE | KH2PO4 | 7778-77-0 | 1786 | | | | | CAB 36 ARCHIVE | 10500 GM | 500 GM |
| 290 | POTASSIUM PHOSPHATE DIBASIC | K2HPO4 | 7758-11-4 | 2286 | | | | | CAB 4-5 | 60500 GM | 3000 GM |
| 940 | POTASSIUM PHOSPHATE DIBASIC | K2HPO4 | 7758-11-4 | 2286 | | | | | CAB 36 ARCHIVE | 10500 GM | 500 GM |
| 513 | POTASSIUM PHTHALATE | KHCBH4O4 | | | | | | | CAB 12-4 | 10100 GM | 100 GM |
| 926 | POTASSIUM PTHALATE ACID | KHCBH4O4 | | | | | | | CAB 36 ARCHIVE | 1050 GM | 50 GM |
| 268 | POTASSIUM PYROANTIMONATE | | | | POISON | | | | CAB 36 ARCHIVE | 10100 GM | 100 GMR |
| 269 | POTASSIUM PYROSULFATE | K2S2O7 | 7790-62-7 | 2267 | POISON CORROSIV | | | | CAB 36 ARCHIVE | 10500 GM | 500 GM |
| 1611 | POTASSIUM SAT'D | | | | | | | | CAB 21-2 DESC. | 101 VIAL | 1 VIAL |

Table A-4. 222-SA Chemical Inventory by Common Name. (sheet 22 of 35)

| REC. | COMMON NAME | FORMULA | CAS NUMBER | MSDS # | CLASSIFICATION | C | P | MATRIX | LOCATION | UNITS/SIZE | TOTAL |
|---|---|---|---|---|---|---|---|---|---|---|---|
| 270 | POTASSIUM SODIUM TARTRATE | KOCO(CHOH)2COONA-4H2O | 304-59-6 | 1841 | | | | | CAB 4-5 | 128500 GM | 6000 GM |
| 434 | POTASSIUM SODIUM TARTRATE | KOCO(CHOH)2COONA-4H2O | 304-59-6 | 1841 | | | | | CAB 9-3 | 18500 GM | 500 GM |
| 271 | POTASSIUM SULFATE | K2SO4 | 7778-80-5 | 1844 | | | | | CAB 4-5 | 38500 GM | 1500 GM |
| 435 | POTASSIUM SULFATE | K2SO4 | 7778-80-5 | 1844 | | | | | CAB 9-3 | 18500 GM | 500 GM |
| 1376 | POTASSIUM SULFATE | K2SO4 | 7778-80-5 | 1844 | | | | | DESC II DENSITY BNCH TOP | 1850 GM | 50 GM |
| 273 | POTASSIUM TARTRATE | KOCO(CHOH)2COOK-1/2H2O | 921-53-9 | 2356 | | | | | CAB 4-6 | 18500 GM | 500 GM |
| 1293 | POTASSIUM TETROXALATE | CHHC2O4H2C2O4-2H2O | | | | | | | CAB 13-4 | 18100 GM | 100 GM |
| 274 | POTASSIUM THIOCYANATE | KSCN | 333-20-2 | 1447 | POISON | | | | CAB 4-6 | 88500 GM | 4000 GM |
| 436 | POTASSIUM THIOCYANATE | KSCN | 333-20-0 | 1447 | POISON | | | | CAB 9-3 | 28500 GM | 1000 GM |
| 1144 | POTASSIUM THIOCYANATE | KSCN | 333-20-2 | 1447 | POISON | | | | CAB 36 ARCHIVE | 18500 GM | 500 GM |
| 906 | PRASEODYMIUM | PR | | | CORROSIVE | | | 2% HNO3 | CAB 22-4 | 28500 ML | 1000 ML |
| 275 | PRASEODYMIUM ACETATE | (CH3CO2)3PR-3H2O | 6192-12-7 | | | | | | CAB 36 ARCHIVE | 18150 GM | 150 GM |
| 1459 | PRASEODYMIUM NITRATE | PR(NO3)3-6H2O | 15878-77-0 | 3328 | | | | | 74 | 1825 GM / 1820 GM | 45 GM |
| 1468 | PRASEODYMIUM OXIDE | PR6O11 | 12037-29-5 | 1448 | | | | | 74 | 1810 GM / 1825 GM | 35 KG |
| 629 | PROPANAL-2 | | | | FLAMMABLE | | | | CAB 19-1 | 181 LITER | 1 LITER |
| 594 | PROPANE | CH3CH2CH3 | 74-98-6 | 14271 | FLAMMABLE | | | | N CNTR | 181 LB | 1 LB |
| 663 | PROPANE FUEL | C3H8 | 74-98-6 | 14291 | FLAMMABLE | | | | CAB 20-2 | 781 LB | 7 LB |
| 671 | PROPYLENE CARBONATE | OCH(CH3)CH2OCO | | | | | | | CAB 20-3 | 18500 ML | 500 ML |
| 667 | PYRIDINE | C5H5N | 110-86-1 | 1455 | FLAMMABLE | | | | CAB 20-3 | 381 PT. | 3 PINTS |
| 1256 | PYRIDYLAZO 4-2 RESORCINOL | N:CNCH:CHCHC(C6H3(OH)2 | | | | | | | CAB 13-2 | 305 GM | 15 GM |
| 1254 | PYRIDYLAZO1-2-2 NAPHTHOL | N-CNCH:CHCH:CH:NC10H6OH | | | | | | | CAB 13-2 | 285 GM | 10 GM |
| 1255 | PYROCATECHOL VIOLET | OC(C6H3-4 | | | | | | | CAB 13-2 | 305 GM / 1810 GM | 25 GM |
| 1098 | PYROCATECHOL VIOLET 1% | | | | | | | H2O | CAB 37 ARCHIVE | 1850 ML | 50 ML |
| 1257 | PYROCATECHOLSULFONEPHTHALEIN | HOSO2C6H4C(C6H3-3,4(OH)2)C:C6H3-3-OH-4:OH | | | | | | | CAB 13-2 | 265 GM | 10 GM |
| 144 | PYROGALLIC ACID | C6H3(OH)3 | 87-66-1 | 1457 | POISON | | | | CAB 36 ARCHIVE | 182.5 KG | 2.5 KG |
| 278 | QUINHYDRONE | C12H10O4 | 106-34-3 | 1818 | POISON | | | | CAB 4-6 | 1820 GM | 20 GM |
| 277 | QUINOLINOL-8 | HOC6H3N:CH:CH:CH | | | | | | | CAB 4-6 | 28500 GM | 1000 GM |
| 437 | QUINOLINOL-8 | HOC9H8N | | | | | | | CAB 9-3 | 18125 GM | 125 GM |
| 1241 | RED ORGANIC DYE | | | | | | | | CAB 13-2 | 1810 GM | 10 GM |
| 687 | REDUCTANT | | | | | | | | CAB 37 ARCHIVE | 18250 ML | 250 ML |
| 601 | REFERENCE ELECTRODE FILLING SOL'N | | | | | | | 4M KCL | CNTR NO. END | 1850 ML | 50 ML |
| 585 | REFERENCE ELECTRODE SOLUTION | | | | | | | 4 M KCL | CAB 14 | 182 OZ. | 2 OZ. |
| 534 | RESIN | AG50W-X4 | | | | | | | 62 | 48500 GM | 2000 GM |
| 1447 | RESIN | AG50W-X4 | | | | | | | CAB 33-6 | 18500 GM | 500 GM |
| 1475 | RHENIUM POWDER | RE | 7440-15-5 | | FLAMMABLE SOLID | | | | 74 | 1810 GM | 10 GM |
| 1474 | RHENIUM TRICHLORIDE | RECL3 | 13569-63-6 | | | | | | 74 | 185 GM / 181 GM | 6 GM |
| 1063 | RHODANINO ACETONE | | | | | | | | CAB 27-3 | 1850 ML | 50 ML |
| 1477 | RHODIUM TRICHLORIDE | RHCL3-H2O | 20765-98-4 | 2358 | POISON | | | | 74 | 1810 GM | 10 GM |
| 1117 | RTV SILICON RUBBER | | | | | | | | CAB 32-4 | 183 OZ. | 3 OZ. |
| 1253 | ROSE BENGAL | C20H3CL4I4NA2O5 | 632-69-9 | | | | | | CAB 13-2 | 1825 GM | 25 GM |
| 873 | RUBIDIUM | RB | | | CORROSIVE | | | 2% HCL | CAB 22-2 | 18500 ML | 500 ML |
| 908 | RUBIDIUM | RB | | | CORROSIVE | | | 2% HNO3 | CAB 22-4 | 28500 ML | 1000 ML |
| 1462 | RUBIDIUM | RB | | | | | | | CAB 23-3 | 1850 ML | 50 ML |

Table A-4. 222-SA Chemical Inventory by Common Name. (sheet 23 of 35)

| REC. | COMMON NAME | FORMULA | CAS NUMBER | NSDS # | CLASSIFICATION | C | P | MATRIX | LOCATION | UNITS/SIZE | TOTAL |
|---|---|---|---|---|---|---|---|---|---|---|---|
| 1476 | RUBIDIUM CARBONATE | RB2CO3 | 584-09-8 | | OXIDIZER | | | | 74 | 2810 GM / 2850 GM | 70 GM |
| 497 | RUBIDIUM CHLORIDE | RBCL | 7791-11-9 | | | | | | CAB 36 ARCHIVE | 101 GM | 1 GM |
| 1478 | RUBIDIUM CHLORIDE | RBCL | 7791-11-9 | | | | | | 74 | 10256M/206M/10506M/1010 GM | 105 GM |
| 960 | RUBIDIUM NITRATE | RBNO3 | 13126-12-0 | 3369 | OXIDIZER | | | | DESC 2 | 4010 GM | 40 GM |
| 1158 | RUBIDIUM NITRATE | RBNO3 | 13126-12-0 | 3369 | OXIDIZER | | | | CAB 36 ARCHIVE | 1050 GM | 50 GM |
| 1479 | RUBIDIUM NITRATE | RBNO3 | 13126-12-3 | 3369 | OXIDIZER | | | | 74 | 1050 GM | 50 GM |
| 1480 | RUBIDIUM OXIDE | RB2O | 18086-11-4 | | CORROSIVE | | | | 74 | 2025 GM | 50 GM |
| 1481 | RUBIDIUM SULFATE | RB2SO4 | 7488-54-2 | | | | | | 74 | 1010 GM | 10 GM |
| 874 | RUTHENIUM | RU | | | CORROSIVE | | | 10% HCL | CAB 22-2 | 10500 ML | 500 ML |
| 754 | RUTHENIUM POWDER | RU | 7440-18-8 | | FLAMMABLE | | | | CAB 7-4 | 105 GM | 5 GM |
| 1482 | RUTHENIUM SULFATE | RU2SO4 | | | | | | | 74 | 101 GM | 1 GM |
| 1190 | S-DIPHENYLCARBAZIDE | C6H5H=NCONHNHC6H5(C6H5NHNH)2CO | 140-22-7 | | | | | | CAB 13-1 | 20100 GM | 200 GM |
| 207 | SALICYLIC ACID | HOC6H4COOH | 69-72-7 | 1460 | POISON | | | | CAB 3-7 | 10500 GM | 500 GM |
| 1034 | SALT | | | | | | | | DOCK | 1050 LB | 50 LBS |
| 825 | SAMARIUM | SM | | | CORROSIVE | | | 2% HNO3 | CAB 23-4 | 10500 ML | 500 ML |
| 969 | SAMARIUM | SM | | | CORROSIVE | | | 2% HNO3 | CAB 22-4 | 10500 ML | 500 ML |
| 1483 | SAMARIUM NITRATE | SMNO3 | 13759-83-6 | | OXIDIZER | | | | 74 | 1025 GM | 25 GM |
| 966 | SAMARIUM OXIDE | SM2O3 | 12060-58-1 | 1922 | | | | | DESC 2 | 105 GM | 5 GM |
| 1469 | SAMARIUM OXIDE | SM2O3 | 12060-58-1 | 1922 | | | | | 74 | 2025 GM / 405 GM | 70 GMA |
| 441 | SAND | | | | | | | | CAB 36 ARCHIVE | 105 GM | 5 GM |
| 1484 | SCANDIUM NITRATE | SC(NO3)3 | | | OXIDIZER | | | | 74 | 205 GM | 10 GM |
| 1470 | SCANDIUM OXIDE | SC2O3 | 12060-08-1 | | | | | | 74 | 205 GM | 10 MG |
| 907 | SELENIUM | SE | | | CORROSIVE | | | 2% HNO3 | CAB 22-4 | 10500 ML | 500 ML |
| 1060 | SELENIUM | SE | | | | | | 10% HNO3 | CAB 27-3 | 2050 ML | 100 ML |
| 1384 | SELENIUM | SE | | | CORROSIVE | | | 2% HNO3 | CAB 27-3 | 10500 ML | 500 ML |
| 1567 | SELENIUM (IV) OXIDE | SEO2 | 7446-08-4 | 1756 | POISON | Y | | | CAB 12-5 | 4010 ML | 40 ML |
| 755 | SELENIUM METAL | SE | 7782-49-2 | | POISON | | | | CAB 7-4 | 103 GM | 3 GM |
| 753 | SELENIUM SHOT | SE | 7782-49-2 | | POISON | | | | CAB 7-4 | 10100 GM | 100 GM |
| 279 | SILICA | SIO2 | 14808-60-7 | 2147 | | | | | CAB 36 ARCHIVE | 10500 GM | 500 GM |
| 1610 | SILICA FUMES | | | | | | | | CAB 21-2 DESC. | 101 VIAL | 1 VIAL |
| 208 | SILICIC ACID | SIO2 | 7699-41-4 | 2548 | | | | | CAB 3-7 | 30500 GM | 1500 GM |
| 281 | SILICON | SI | 7440-21-3 | 2616 | | | | | CAB 36 ARCHIVE | 10500 GM | 500 GM |
| 363 | SILICON | SI | | | CORROSIVE | | | 2% KOH | GROUT CART RM A | 10500 ML | 500 ML |
| 562 | SILICON | SI | | | | | | | CAB 23-3 | 1050 ML | 50 ML |
| 810 | SILICON | SI | | | CORROSIVE | | | H2O | CAB 23-3 | 1050 ML | 50 ML |
| 1052 | SILICON | SI | | | CORROSIVE | | | | CAB 27-1 | 10500 ML | 500 ML |
| 1513 | SILICON METAL (LUMPS) | SI | 7440-21-3 | 2616 | | | | | CAB 7-4 | 105 GM | 5 GM |
| 474 | SILICON OXIDE | SIO2 | 1009-28-6 | | FLAMMABLE | | | | CAB 36 ARCHIVE | 105 GM | 5 GM |
| 280 | SILICOTUNGSTIC ACID (MERCK) | SIO2:12WO3-26H2O | 12520-88-6 | 1972 | CORROSIVE | | | | CAB 36 ARCHIVE | 1050 GM | 50 GM |
| 784 | SILVER | AG | | | CORROSIVE | | | | CAB 37 ARCHIVE | 20100 ML | 200 ML |
| 831 | SILVER | AG | 7697-37-2 | | CORROSIVE | | | 10% HNO3 | CAB 23-3 | 1050 ML | 50 ML |
| 833 | SILVER | AG | | | CORROSIVE | | | 2% HNO3 | CAB 23-3 | 10500 ML | 500 ML |
| 882 | SILVER | AG | | | CORROSIVE | | | 2% HNO3 | CAB 22-3 | 10500 ML | 500 ML |
| 1574 | SILVER | AG | | | | | | | CAB 23-3 | 1050 ML | 50 ML |
| 1486 | SILVER CHLORIDE | AGCL | 7783-90-6 | 3092 | | | | | 74 | 1010 GM | 10 GM |
| 1485 | SILVER CYCLOHEXANE BUTYRATE | AGO2C10H17 | 62638-04-4 | 16951 | | | | | 74 | 1025 GM | 25 GM |
| 710 | SILVER METAL PRECIPITATE | AG | 7440-22-4 | 2983 | | | | | CAB 7-4 | 104 OZ. | 4 OZ. |
| 438 | SILVER NITRATE | AGNO3 | 7761-88-8 | 1472 | POISON OXIDIZER | Y | | | CAB 4-8 | 110125 GM | 1375 GM |
| 518 | SILVER NITRATE | AGNO3 | 7761-88-8 | 1472 | POISON | Y | | | CAB 12-5 | 3850 GM | 150 GM |

Table A-4. 222-SA Chemical Inventory by Common Name. (Sheet 24 of 35)

| REC. | COMMON NAME | FORMULA | CAS NUMBER | MSDS # | CLASSIFICATION | C | P | MATRIX | LOCATION | UNITS/SIZE | TOTAL |
|---|---|---|---|---|---|---|---|---|---|---|---|
| 785 | SILVER NITRATE | AGNO3 | 7761-88-8 | 1472 | OXIDIZER POISON | | Y | | CAB 37 ARCHIVE | 68100 ML | 600 ML |
| 1005 | SILVER NITRATE | AGNO3 | 7761-88-8 | 1472 | OXIDIZER POISON | | Y | | DESC 5 | 1040 GM | 40 GM |
| 1444 | SILVER NITRATE | AGNO3 | 7761-88-8 | 1472 | OXIDIZER POISON | | Y | | CAB 36 ARCHIVE | 184000 GM | 4000 GM |
| 1037 | SILVER NITRATE FOR STANDARDIZING | AGNO3 | 7761-88-8 | 1472 | OXIDIZER POISON | | | | FRIG-IN LAB SH-2 | 18250 ML | 250 ML |
| 511 | SILVER NITRATE STD. SOL'N | AGNO3 | 7761-88-8 | 1472 | POISON OXIDIZER | | | | CAB 22-5 | 101 LITER | 1 LITER |
| 744 | SILVER OXIDE | AG2O | 20667-12-3 | 2814 | OXIDIZER | | | | CAB 7-4 | 2050 GM | 100 GM |
| 1408 | SILVER OXIDE | AG2O | 20667-12-3 | 2814 | OXIDIZER | | | | 74 | 101/3.4 GM | 113.4 GM |
| 202 | SILVER PEROXIDE | AGO | 1301-96-8 | | OXIDIZER | | | | CAB 36 ARCHIVE | 105 GM | 5 GM |
| 1409 | SILVER SULFATE | AG2SO4 | 10294-26-5 | 2800 | | | | | 74 | 1020 GM / 10250 GM | 275 GM |
| 1407 | SIVER FLUORIDE | AGF | 7775-41-9 | | | | | | 74 | 1050 GM | 50 GM |
| 775 | SODIUM | NA | | 16141 | CORROSIVE | | | | CAB 37 ARCHIVE | 20100 ML | 200 ML |
| 807 | SODIUM | NA | 7647-01-0 | | CORROSIVE | | | 1% HCL | CAB 23-3 | 1050 ML | 50 ML |
| 849 | SODIUM | NA | | 16141 | CORROSIVE | | | 2% HNO3 | CAB 23-4 | 20500 ML | 1000 ML |
| 904 | SODIUM | NA | | 16141 | CORROSIVE | | | 2% HNO3 | CAB 22-4 | 10500 ML | 500 ML |
| 1222 | SODIUM | NA | | | | | | | CAB 23-3 | 1050 ML | 50 ML |
| 221 | SODIUM ACETATE | CH3COONA-3H2O | 6131-90-4 | 1475 | CORROSIVE | | | | CAB 5-1 | 90500 GM | 4500 GM |
| 439 | SODIUM ACETATE | CH3COONA-3H2O | 6131-90-4 | 1475 | CORROSIVE | | | | CAB 9-4 | 20500 GM | 1000 GM |
| 1153 | SODIUM ACETATE | CH3COONA-3H2O | 6131-90-4 | 1475 | CORROSIVE | | | | CAB 31-3 | 110500 GM | 5500 GM |
| 1411 | SODIUM ACETATE | CH3COONA-3H2O | 6131-90-4 | 1475 | CORROSIVE | | | 1M/.93M ACETIC | CAB 34-6 | 101000 ML | 1000 ML |
| 369 | SODIUM ALUMINATE | NA2O-AL2O3-3H2O | 1302-42-7 | 1020 | | | | | GROUT CART RM A | 602500 GM | 15000 GM |
| 203 | SODIUM ARSENITE | NAASO2 | 7631-89-2 | 3001 | POISON | Y | | | CAB 36 ARCHIVE | 10500 GM | 500 GM |
| 284 | SODIUM AZIDE | NAN3 | 26628-22-8 | 1479 | POISON | | | | CAB 36 ARCHIVE | 10500 GM | 500 GM |
| 296 | SODIUM BENZOTE | C6H5CO2NA | 532-32-1 | | | | | | CAB 36 ARCHIVE | 10500 GM | 500 GM |
| 285 | SODIUM BICARBONATE | NAHCO3 | 144-55-8 | 1480 | CORROSIVE | | | | CAB 5-1 | 70500 GM | 3500 GM |
| 440 | SODIUM BICARBONATE | NAHCO3 | 144-55-8 | 1480 | CORROSIVE | | | | CAB 9-4 | 10500 GM | 500 GM |
| 1154 | SODIUM BICARBONATE | NAHCO3 | 144-55-8 | 1480 | CORROSIVE | | | | CAB 31-3 | 100500 GM | 5000 GM |
| 1548 | SODIUM BICARBONATE | NAHCO3 | 144-55-8 | 1480 | CORROSIVE | | | | CAB 12-5 | 2030 ML | 60 ML |
| 1039 | SODIUM BIS(2-METHOXYETHOXY) ALUMINUM HYDRIDE 70% BENZENE | | | | | | | | FRIG IN LAB SH-3 | 10500 ML | 500 ML |
| 286 | SODIUM BISULFATE | NAHSO4-H2O | 10034-88-5 | 2263 | POISON CORROSIV | | | | CAB 36 ARCHIVE | 20500 GM | 1000 GM |
| 287 | SODIUM BISULFITE | NAHSO3 | 7631-90-5 | 2296 | CORROSIVE | | | | CAB 5-1 | 40500 GM | 2000 GM |
| 445 | SODIUM BISULFITE | NAHSO3 | 7631-90-5 | 2276 | CORROSIVE | | | | CAB 9-4 | 20500 GM | 1000 GM |
| 289 | SODIUM BORATE | NA2B4O7-10H2O | 1303-96-4 | 1483 | | | | | CAB 5-1 | 10500 GM | 500 GM |
| 276 | SODIUM BOROHYDRIDE | NABH4 | 16940-66-2 | | FLAMM FOIS CORR | | | | CAB 5-1 | 10100 GM | 100 GM |
| 291 | SODIUM BROMATE | NABRO3 | 7789-38-0 | 2552 | OXIDIZER | | | | CAB 36 ARCHIVE | 10500 GM | 500 GM |
| 304 | SODIUM BROMIDE | NABR | 7647-15-6 | 1695 | | | | | CAB 5-1 | 10500 GM | 500 GM |
| 564 | SODIUM BROMIDE | NABR | 7647-15-6 | 1695 | | | | | CAB 12-4 | 2025 GM | 50 GM |
| 933 | SODIUM BROMIDE | NABR | 7647-15-6 | 1695 | | | | | CAB 36 ARCHIVE | 10250 GM | 250 GM |
| 1035 | SODIUM BROMIDE | NABR | 7647-15-6 | 1695 | | | | | DESC 8 | 1010 GM | 10 GM |
| 1015 | SODIUM BROMINE | NABR | | | | | | | DESC 5 | 1025 GM | 25 GM |
| 292 | SODIUM CARBONATE | NA2CO3 | 497-19-8 | 1484 | | | | | CAB 5-2 | 170500 GM | 8500 GM |
| 300 | SODIUM CARBONATE | NA2CO3 | 497-19-8 | 1484 | | | | | CAB 6-4 | 402.5 KG | 10 KG |
| 374 | SODIUM CARBONATE | NA2CO3 | 497-19-8 | 1484 | | | | | GROUT CART RM A | 102500 GM | 2500 GM |
| 442 | SODIUM CARBONATE | NA2CO3 | 497-19-8 | 1484 | | | | | CAB 9-4 | 10500 GM | 500 GM |
| 485 | SODIUM CARBONATE | NA2CO3 | 497-19-8 | 1484 | | | | | CAB 12-3 | 120500 GM / 110100 GM | 7100 GM |
| 507 | SODIUM CARBONATE | NA2CO3 | 497-19-8 | 1484 | | | | | CAB 12-4 | 10100 GM | 100 GM |
| 964 | SODIUM CARBONATE | NA2CO3 | 497-19-8 | 1054 | | | | | DESC 2 | 10100 GM | 100 GM |
| 978 | SODIUM CARBONATE | NA2CO3 | 497-19-8 | 1484 | | | | | DESC 3 | 1010 GM/1030 GM/1020 GM/105 GM | 65 GM |
| 995 | SODIUM CARBONATE | NA2CO3 | 497-19-8 | 1484 | | | | | DESC 4 | 1030 GM | 30 GM |
| 1009 | SODIUM CARBONATE | NA2CO3 | 497-19-8 | 1484 | | | | | DESC 5 | 1050 GM | 50 GM |
| 1168 | SODIUM CARBONATE | NA2CO3 | 497-19-8 | 1484 | | | | | CAB 31-4 | 120500 GM | 6000 GM |

# Table A-4. 222-SA Chemical Inventory by Common Name. (Sheet 25 of 35)

| REC. | COMMON NAME | FORMULA | CAS NUMBER | NSDS # | CLASSIFICATION | C | P | MATRIX | LOCATION | UNITS/SIZE | TOTAL |
|---|---|---|---|---|---|---|---|---|---|---|---|
| 1386 | SODIUM CARBONATE | NA2CO3 | 497-19-8 | 1484 | CORROSIVE | | | | ORGANIC BNCH TOP | 382500 ML | 7500 ML |
| 1567 | SODIUM CARBONATE | NA2CO3 | 497-19-8 | 1484 | CORROSIVE | | | | CAB 12-5 | 2850 GM | 60 GM |
| 305 | SODIUM CHLORATE | NACLO3 | 7775-09-9 | 1653 | OXIDIZER | | | | CAB 36 ARCHIVE | 18500 GM | 500 GM |
| 306 | SODIUM CHLORIDE | NACL | 7647-14-5 | 1485 | | | | | CAB 36 ARCHIVE | 18500 GM | 500 GM |
| 307 | SODIUM CHLORIDE | NACL | 7647-14-5 | 1485 | | | | | CAB 5-2 | 98500 GM | 4500 GM |
| 510 | SODIUM CHLORIDE | NACL | 7647-14-5 | 1485 | | | | | CAB 12-4 | 1825 GM | 25 GM |
| 971 | SODIUM CHLORIDE | NACL | 7647-14-5 | 1485 | | | | | DESC 2 | 2850 GM | 100 GM |
| 1017 | SODIUM CHLORIDE | NACL | 7647-14-5 | 1485 | | | | | DESC 6 | 1850 GM | 50 GM |
| 1024 | SODIUM CHLORIDE | NACL | 7647-14-5 | 1485 | | | | | DESC 8 | 18100 GM | 100 GM |
| 1178 | SODIUM CHLORIDE | NACL | 7647-14-5 | 1485 | | | | | CAB 31-5 | 582.5 KG | 12.5 KG |
| 1378 | SODIUM CHLORIDE | NACL | 7647-14-5 | 1485 | | | | | DESC 11 DENSITY BNCH TOP | 18100 GM | 100 GM |
| 1179 | SODIUM CHLORIDE CRYSTAL | NACL | 7647-14-5 | 1485 | | | | | CAB 31-5 | 18500 GM | 500 GM |
| 308 | SODIUM CHROMATE | NA2CR2O4-4H2O | 7775-11-3 | 1486 | OXIDIZER | Y | | | CAB 5-2 | 58500 GM | 2500 GM |
| 447 | SODIUM CHROMATE | NA2CR2O4-4H2O | 7775-11-3 | 1486 | OXIDIZER | Y | | | CAB 9-4 | 18500 GM | 500 GM |
| 309 | SODIUM CITRATE | NA3C6H5O7-2H2O | 68-04-2 | 1136 | | | | | CAB 5-3 | 28500 GM | 1000 GM |
| 372 | SODIUM CITRATE | C6H5NA3O7-2H2O | 68-04-2 | 1136 | | | | | GROUT CART RM A | 18500 GM | 500 GM |
| 448 | SODIUM CITRATE | C8H5NA3O7-2H2O | 68-04-2 | 1136 | | | | | CAB 9-4 | 18500 GM | 500 GM |
| 453 | SODIUM CITRATE | HOC(COONA)(CH2COONA) 2-2H2O | 68-04-2 | 1136 | | | | | CAB 9-6 | 102.5 KG | 2.5 KG |
| 1026 | SODIUM CITRATE | NA3C6H5O7-2H2O | 68-04-2 | 1136 | | | | | DESC 8 | 1810 GM | 10 GM |
| 1666 | SODIUM CITRATE | NA3C6H5O7-2H2O | 68-04-2 | 1136 | | | | | CAB 36 ARCHIVE | 1820 GM | 20 GM |
| 315 | SODIUM COBALTINITRITE | NACO(NO2)6 | 14649-73-1 | 2312 | OXIDIZER | | | | CAB 5-3 | 28125 GM | 250 GM |
| 1490 | SODIUM CYCLOHEXANEBUTYRATE | NAO2C(CH2)4CH2 | 61884-28-1 | | | | | | 74 | 185 GM | 5 GM |
| 222 | SODIUM DICHROMATE | NA2CR2O7-2H2O | 10588-01-9 | 2883 | OXIDIZER | Y | | | CAB 5-3 | 148500 GM | 7000 GM |
| 373 | SODIUM DICHROMATE | NA2CR2O7-2H2O | 10588-01-9 | 2883 | OXIDIZER | Y | | | GROUT CART RM A | 18500 GM | 500 GM |
| 449 | SODIUM DICHROMATE | NA2CR2O7-2H2O | 10588-01-9 | 2883 | OXIDIZER | Y | | | CAB 9-4 | 28500 GM | 1000 GM |
| 1070 | SODIUM DICHROMATE | NA2CR2O7-2H2O | 10588-01-9 | 2883 | OXIDIZER | Y | | | CAB 27-4 | 18250 ML | 250 ML |
| 1389 | SODIUM DICHROMATE | NA2CR2O7 | 7789-12-0 | 1488 | POISON OXIDIZER | Y | | | CAB 27-3 | 1850 ML | 50 ML |
| 1402 | SODIUM DICHROMATE SAT'D | NA2CR2O7 | 7789-12-0 | 1488 | POISON | Y | | | CAB 34-2 | 18250 ML | 250 ML |
| 981 | SODIUM FLOURIDE | NAF | 7681-49-4 | 1491 | POISON | | Y | | DESC 3 | 1820 GM | 20 GM |
| 28 | SODIUM FLUORIDE | NAF | 7681-49-4 | 1491 | POISON | | Y | | DESC 9 | 1850 GM | 50 GM |
| 311 | SODIUM FLUORIDE | NAF | 7681-49-4 | 1491 | POISON | | Y | | CAB 5-3 | 28500 GM | 1000 GM |
| 451 | SODIUM FLUORIDE | NAF | 7681-49-4 | 1491 | POISON | | Y | | CAB 9-4 | 18500 GM | 500 GM |
| 509 | SODIUM FLUORIDE | NAF | 7681-49-4 | 1491 | POISON | | Y | | CAB 12-4 | 1850 GM | 50 GM |
| 1018 | SODIUM FLUORIDE | NAF | 7681-49-4 | 1491 | POISON | | Y | | DESC 6 | 1830 GM | 30 GM |
| 297 | SODIUM FORMALDEHYDE SULFOXILATE | CH2OHOSONA-2H2O | 149-44-0 | 1493 | | | Y | | CAB 4-8 | 281000 GM | 2000 GM |
| 312 | SODIUM HYDRASULFITE | NA2S2O4 | 7775-14-6 | 2377 | FLAMMABLE | | | | CAB 36 ARCHIVE | 18500 GM | 500 GM |
| 43 | SODIUM HYDROXIDE | NAOH | 1310-73-2 | 1105 | CORROSIVE POISO | | | | 95 | 604 LITERS | 24 LITERS |
| 258 | SODIUM HYDROXIDE | NAOH | 1310-73-2 | 1105 | CORROSIVE POISO | | | | CAB 37 ARCHIVE | 18500 ML | 500 ML |
| 446 | SODIUM HYDROXIDE | NAOH | 1310-73-2 | 1105 | CORROSIVE POISO | | | | CAB 37 ARCHIVE | 18125 ML | 125 ML |
| 587 | SODIUM HYDROXIDE | NAOH | 1310-73-2 | 1105 | CORROSIVE POISO | | | | CAB 17-3 | 18100 ML | 100 ML |
| 619 | SODIUM HYDROXIDE | NAOH | 1310-73-2 | 1105 | CORROSIVE POISO | | | | CAB 41-3 | 38500 ML | 1500 ML |
| 620 | SODIUM HYDROXIDE | NAOH | 1310-73-2 | 1105 | CORROSIVE POISO | | | | CAB 41-3 | 18100 ML | 100 ML |
| 621 | SODIUM HYDROXIDE | NAOH | 1310-73-2 | 1105 | CORROSIVE POISO | | | | CAB 41-3 | 481000 ML | 4000 ML |
| 768 | SODIUM HYDROXIDE | NAOH | 1310-73-2 | 1105 | CORROSIVE POISO | | | | CAB 37 ARCHIVE | 28100 ML | 200 ML |
| 1064 | SODIUM HYDROXIDE | NAOH | 1310-73-2 | 1105 | POISON CORROSIV | | | | CAB 27-3 | 18500 ML | 500 ML |
| 1168 | SODIUM HYDROXIDE | NAOH | 1310-73-2 | 1105 | CORROSIVE POISO | | | | CAB 37 ARCHIVE | 18500 ML | 500 ML |
| 1176 | SODIUM HYDROXIDE | NAOH | 1310-73-2 | 1105 | POISON CORROSIV | | | | CAB 31-5 | 18500 GM | 500 GM |
| 1383 | SODIUM HYDROXIDE | NAOH | 1310-73-2 | 1105 | CORROSIVE POISO | | | | ORGANIC BNCH TOP | 248 LITER | 16 LITER |
| 1390 | SODIUM HYDROXIDE | NAOH | 1310-73-2 | 1105 | CORROSIVE | | | | CAB 27-3 | 18250 ML | 250 ML |

Table A-4. 222-SA Chemical Inventory by Common Name. (sheet 26 of 35)

| REC. | COMMON NAME | FORMULA | CAS NUMBER | MSDS # | CLASSIFICATION | C | P | MATRIX | LOCATION | UNITS/SIZE | TOTAL |
|---|---|---|---|---|---|---|---|---|---|---|---|
| 1177 | SODIUM HYDROXIDE PELLETS | NAOH | 1310-73-2 | 1105 | CORROSIVE POISO | | | | CAB 31-5 | 582.5 KG | 12.5 KG |
| 313 | SODIUM IODIDE | NAI | 7681-82-5 | 1620 | CORROSIVE | | | | CAB 36 ARCHIVE | 68125 GM / 18500 GM | 1250 GM |
| 318 | SODIUM META-SILICATE | NA2SIO3-9H2O | 6834-91-0 | 1784 | POISON | | | | CAB 5-3 | 18500 GM | 500 GM |
| 317 | SODIUM MOLYBDATE | NA2MO O4-2H2O | 7631-95-0 | 1501 | | | | | CAB 5-3 | 18500 GM | 500 GM |
| 314 | SODIUM NITRATE | NANO3 | 7631-99-4 | 1506 | OXIDIZER | | | | CAB 5-4 | 178500 GM | 8500 GM |
| 348 | SODIUM NITRATE | NANO3 | 7631-99-4 | 1506 | OXIDIZER | | | | GROUT CART RM A | 1582500 GM | 37500 GM |
| 452 | SODIUM NITRATE | NANO3 | 7631-99-4 | 1506 | OXIDIZER | | | | CAB 9-5 | 28500 GM | 1000 GM |
| 473 | SODIUM NITRATE | NANO3 | 7631-99-4 | 1506 | OXIDIZER | | | | CAB 11-5 | 582.5 KG | 12.500 KG |
| 508 | SODIUM NITRATE | NANO3 | 7631-99-4 | 1506 | OXIDIZER | | | | CAB 12-4 | 2825 GM | 50 GM |
| 996 | SODIUM NITRATE | NANO3 | 7631-99-4 | 1506 | OXIDIZER | | | | DESC 4 | 2825 GM | 50 GM |
| 1008 | SODIUM NITRATE | NANO3 | 7631-99-4 | 1506 | OXIDIZER | | | | DESC 5 | 1010 GM | 10 GM |
| 1019 | SODIUM NITRATE | NANO3 | 7631-99-4 | 1506 | OXIDIZER | | | | DESC 6 | 1850 GM | 50 GM |
| 1175 | SODIUM NITRATE | NANO3 | 7631-99-4 | 1506 | OXIDIZER | | | | CAB 31-4 | 38500 GM | 1500 GM |
| 9 | SODIUM NITRITE | NANO2 | 7632-00-0 | 1495 | OXIDIZER POISON | | | | CAB 31-3 | 18500 GM | 500 GM |
| 365 | SODIUM NITRITE | NANO2 | 7632-00-0 | 1495 | OXIDIZER | | | | GROUT CART RM A | 481000 GM / 178500 GM | 12500 GM |
| 586 | SODIUM NITRITE | NANO2 | 7632-00-0 | 1495 | POISON OXIDIZER | | | | DESC 6 | 1850 GM | 50 GM |
| 599 | SODIUM NITRITE | NANO2 | 7632-00-0 | 1495 | POISON OXIDIZER | | | | DESC 7 | 1010 GM | 10 GM |
| 990 | SODIUM NITRITE | NANO2 | 7632-00-0 | 1495 | OXIDIZER | | | | DESC 3 | 1830 GM | 30 GM |
| 1007 | SODIUM NITRITE | NANO2 | 7632-00-0 | 1495 | OXIDIZER | | | | DESC 5 | 18100 GM | 100 GM |
| 1409 | SODIUM NITRITE CRYSTALS | NANO2 | 7632-00-0 | 1495 | POISON OXIDIZER | | | | CAB 34-5 | 38814.5 GM | 551 GM |
| 455 | SODIUM NITROFERRICYANIDE | NA2FECN5NO-2H2O | 14402-89-2 | 1693 | POISON | | | | CAB 9-5 | 18500 GM | 500 GM |
| 319 | SODIUM OXALATE | NAOCOCOONA | 62-76-0 | 1507 | | | | | CAB 5-5 | 158500 GM | 7500 GM |
| 456 | SODIUM OXALATE | NAOCOCOONA | 62-76-0 | 1507 | | | | | CAB 9-5 | 18500 GM | 500 GM |
| 514 | SODIUM OXALATE | NA2C2O4 | 62-76-0 | 1507 | | | | | CAB 12-4 | 18100 GM | 100 GM |
| 952 | SODIUM OXALATE | NA2C2O4 | 62-76-0 | 1507 | | | | | DESC 1 | 1010 GM | 10 GM |
| 1174 | SODIUM OXALATE | NAOCOCOONA | 62-76-0 | 1507 | | | | | CAB 31-4 | 18500 GM | 500 GM |
| 1297 | SODIUM OXALATE | NA2C2O4 | 62-76-0 | 1507 | | | | | CAB 13-4 | 58100 GM / 181 GM | 501 GM |
| 530 | SODIUM OXIDE | NAO | | | | | | | CAB 36 ARCHIVE | 182 GM | 2 GM |
| 320 | SODIUM PERCHLORATE | NACLO4-H2O | 7791-07-3 | 2185 | OXIDIZER | | | | CAB 36 ARCHIVE | 1850 GM / 18500 GM | 550 GM |
| 461 | SODIUM PERCHLORATE | NACLO4-H2O | 7791-07-3 | 2185 | OXIDIZER | | | | CAB 36 ARCHIVE | 182.5 KG | 2.5 KG |
| 321 | SODIUM PERSULFATE | NA2S2O8 | 7775-27-1 | 2313 | OXIDIZER | | | | CAB 5-5 | 28500 GM | 1000 GM |
| 1260 | SODIUM PERXENATE | NA4XEO6 | | | | | | | CAB 13-2 | 182 GM | 2 GM |
| 323 | SODIUM PHOSPHATE DIBASIC | NA2HPO4-12H2O | 7782-85-6 | 1851 | | | | | CAB 5-5 | 18500 GM | 500 GM |
| 322 | SODIUM PHOSPHATE MONOBASIC | NAH2PO4-H2O | 10049-21-5 | 2060 | | | | | CAB 5-5 | 158500 GM | 7500 GM |
| 362 | SODIUM PHOSPHATE MONOBASIC | NAH2PO4-H2O | 10049-21-5 | 2060 | | | | | GROUT CART RM A | 38500 GM / 182500 GM | 4000 GM |
| 1014 | SODIUM PHOSPHATE MONOBASIC | NAH2PO4-H2O | 10049-21-5 | 2060 | | | | | DESC 5 | 1830 GM | 30 GM |
| 1170 | SODIUM PHOSPHATE MONOBASIC | NAH2PO4-H2O | 7558-80-75 | 1360 | | | | | CAB 31-4 | 38500 GM | 1500 GM |
| 457 | SODIUM PHOSPHATE TRIBASIC | NA3PO4-12H2O | 10101-89-0 | 1509 | | | | | CAB 9-5 | 18500 GM | 500 GM |
| 1029 | SODIUM PHOSPHATE TRIBASIC | NA3PO4-12H2O | 10101-89-0 | 1509 | | | | | DESC 8 | 185 GM | 5 GM |
| 1169 | SODIUM PHOSPHATE TRIBASIC | NA3PO4-12H2O | 10101-89-0 | 1509 | CORROSIVE | | | | CAB 31-4 | 38500 GM | 1500 GM |
| 324 | SODIUM PYROPHOSPHATE | NA4P2O7-10H2O | 7722-88-5 | 1510 | | | | | CAB 5-5 | 48500 GM | 2000 GM |
| 489 | SODIUM PYROPHOSPHATE | NA4P2O7-10H2O | 7722-88-5 | 1510 | | | | | CAB 11-2 | 18500 GM | 500 GM |
| 486 | SODIUM SELENATE | NA2SEO4 | 13410-01-0 | | POISON | | | | CAB 12-3 | 38100 GM | 300 GM |
| 502 | SODIUM SELENITE | NA2SEO3 | 10102-18-8 | 2689 | | | | | CAB 12-4 | 28100 GM | 200 GM |
| 490 | SODIUM SILICATE | NA2SIO3-9H2O | 1344-09-8 | 1784 | POISON | | | | CAB 11-2 | 18500 GM | 500 GM |
| 325 | SODIUM SULFATE | NA2SO4 | 7757-82-6 | 1621 | | | | | CAB 5-5 | 48500 GM | 2000 GM |
| 326 | SODIUM SULFATE | NA2SO4-10H2O | 7727-73-3 | 1621 | | | | | CAB 5-6 | 258500 GM | 12500 GM |
| 458 | SODIUM SULFATE | NA2SO4-10H2O | 7757-82-6 | 1621 | | | | | CAB 9-5 | 38500 GM | 1500 GM |
| 511 | SODIUM SULFATE | NA2SO4-10H2O | 7757-82-6 | 1621 | | | | | CAB 12-4 | 1825 GM / 18100 GM | 125 GM |
| 1006 | SODIUM SULFATE | NA2SO4-10H2O | 7757-82-6 | 1621 | | | | | DESC 5 | 1850 GM | 50 GM |

Table A-4. 222-SA Chemical Inventory by Common Name. (sheet 27 of 35)

| SEC. | COMMON NAME | FORMULA | CAS NUMBER | NCOS # | CLASSIFICATION | C | P | MATRIX | LOCATION | UNIT/SIZE | TOTAL |
|---|---|---|---|---|---|---|---|---|---|---|---|
| 1020 | SODIUM SULFATE | NA2SO4-10H2O | 7757-82-6 | 1621 | | | | | DESC 6 | 1010 GM | 10 GM |
| 1491 | SODIUM SULFATE | NA2SO4-10H2O | 7757-82-6 | 1621 | | | | | CAB 12-4 | 10100 GM | 100 GM |
| 1667 | SODIUM SULFATE | NA2SO4-10H2O | 7757-82-6 | 1621 | | | | | CAB 36 ARCHIVE | 10500 GM | 500 GM |
| 327 | SODIUM SULFIDE | NA2S-9H2O | 1313-84-4 | 1511 | CORROSIVE FLAMM | | | | CAB 5-6 | 38500 GM | 1500 GM |
| 1089 | SODIUM SULFIDE | | | | | | | | CAB 37 ARCHIVE | 10100 ML | 100 ML |
| 328 | SODIUM SULFITE | NA2SO3 | 7757-83-7 | 1513 | CORROSIVE | | | | CAB 5-7 | 58500 GM | 2500 GM |
| 459 | SODIUM SULFITE | NA2SO3 | 7757-83-7 | 1513 | CORROSIVE | | | | CAB 36 ARCHIVE | 282500 GM | 5000 GM |
| 491 | SODIUM SULFITE | NA2SO3 | 7757-83-7 | 1513 | CORROSIVE | | | | CAB 11-2 | 10500 GM | 500 GM |
| 492 | SODIUM TARTRATE | NAOCO(CHOH)2COONA | 6106-24-7 | 1694 | | | | | CAB 11-2 | 10500 GM | 500 GM |
| 329 | SODIUM TETRAPHENYLBOROM | NAB(C6H5)4 | 143-66-8 | 1973 | | | | | CAB 5-7 | 38100 GM | 500 GM |
| 493 | SODIUM TETRAPHENYLBOROM POWDER | NAB(C6H5)4 | 143-66-8 | 1973 | | | | | CAB 11-2 | 10500 GM | 500 GM |
| 330 | SODIUM THIOSULFATE | NA2S2O3-5H2O | 10102-17-7 | 1515 | | | | | CAB 5-7 | 10500 GM | 500 GM |
| 773 | SODIUM THIOSULFATE | NA2S2O3-5H2O | 10102-17-7 | 1515 | | | | | CAB 37 ARCHIVE | 70100 ML | 700 ML |
| 920 | SODIUM THIOSULFATE | NA2S2O3 | 7761-88-8 | 1472 | POISON DIGITIZER | | | | CAB 22-5 | 101 LITER | 1 LITER |
| 934 | SODIUM THIOSULFATE | NA2S2O3 | 7761-88-8 | 1472 | POISON | | | | CAB 36 ARCHIVE | 10100 GM | 100 GM |
| 331 | SODIUM TUNGSTATE | NA2WO4-2H2O | 13472-45-2 | 2391 | | | | | CAB 5-7 | 10500 GM | 500 GM |
| 988 | SODIUM TUNGSTATE | NA2WO4-2H2O | 13472-45-2 | 2391 | | | | | DESC 3 | 1020 GM | 20 GM |
| 1270 | SFAGHS | C16H7O11N2S3-NA3 | 23647-14-5 | | | | | | CAB 13-3 | 5010 GM | 50 GM |
| 333 | STANNOUS CHLORIDE | SNCL2-2H2O | 7772-99-8 | 2719 | POISON | | | | CAB 5-7 | 238500 GM | 11500 GM |
| 1668 | STANNOUS CHLORIDE | SNCL2-2H2O | 7772-99-8 | 2719 | POISON | | | | CAB 36 ARCHIVE | 28100 GM | 200 GM |
| 361 | STARCH | C6H10O5 | 9005-25-8 | 1778 | | | | | CAB 5-7 | 10500 GM | 500 GM |
| 591 | STATIC STOP | | | | | | | | CAB 17 | 101 LITER | 1 LITER |
| 605 | STD (16C11U) TCE | | | | | | | | CHTP NO. EHO | 1050 ML | 50 ML |
| 1097 | STD 100C3 MTCP (MPA) ACID | | | | | | | | CAB 37-6 | 10250 ML | 250 ML |
| 1381 | STD 102C15-B E-2 CONC. | | | | | | | | CAB 27-3 | 10100 ML | 100 ML |
| 1348 | STD 108C12-B RUTHENIUM CHLORIDE | RU(RUCL3) | | | | | | .50 M HCL | CAB 37 ARCHIVE | 1050 ML | 50 ML |
| 1109 | STD 10C15 E2 CONCENTRATE | | | | | | | | CAB 37-6 | 10250 ML | 250 ML |
| 214 | STD 116C13N IRON | FE | | | | | | HCL | CAB 37 ARCHIVE | 10125 ML | 125 ML |
| 1436 | STD 11C11 | TEALIO | | | | | | | CAB 33-4 | 10825 ML | 450 ML |
| 1345 | STD 11C9-214 MANGANESE OXIDE | MN (AS MNO2) | | | | | | HCL | CAB 37-6 | 10125 ML | 125 ML |
| 1334 | STD 11C9-224 NEODYMIUM STOCK | ND(ND2O3) | | | | | | 4% HNO3 | CAB 37-6 | 10100 ML | 100 ML |
| 288 | STD 11C9-227 LEAD METAL | PB | | | POISON | | | HNO3 | CAB 37 ARCHIVE | 10125 ML | 125 ML |
| 1326 | STD 12C10-6 HNO3 | HNO3 | 7697-37-2 | 1384 | CORROSIVE | | | | CAB 37 ARCHIVE | 101 LITER | 1 LITER |
| 1432 | STD 12C11 | | | | | | | | CAB 33-4 | 170100 ML | 1700 ML |
| 34 | STD 134C11B SODIUM CHLORIDE | NACL | | | | | | | FRIG | 10500 ML | 500 ML |
| 1505 | STD 138C14 | | | | | | | | FRIG DOOR BOTTOM | 10250 ML | 250 ML |
| 1324 | STD 13C10-6 NITRIC ACID | HNO3 | | | | | | | CAB 37-6 | 10500 ML | 500 ML |
| 1320 | STD 13C10-7 HNO3 | HNO3 | | | CORROSIVE | | | | CAB 37 | 10500 ML | 500 ML |
| 618 | STD 13C10-7 NITRIC ACID | HNO3 | | | | | | | CAB 41-2 | 20500 ML | 1000 ML |
| 922 | STD 13C8 CERIC .1M | NH2SO4 | | | | | | | CAB 22-6 | 10500 ML | 500 ML |
| 939 | STD 13C8 CERIC SULFATE | CE(SO4 | | | | | | | CAB 22-6 | 10500 ML | 500 ML |
| 336 | STD 141C12B CALCIUM | CA(NO3) 2-4H2O | | | | | | | CAB 37-6 | 10250 ML | 250 ML |
| 2 | STD 149C11B SILVER NITRATE STOCK | AGNO3 | | | | | | | 102 | 10250 ML | 250 ML |
| 396 | STD 149C12B (NESSLERS STOCK SOL'N) | | | | | | | | CAB 34-1 | 10500 ML | 500 ML |
| 1416 | STD 14C11 | | | | | | | | CAB 33-1 | 10825 ML | 450 ML |
| 598 | STD 15C10-13 NITRIC ACID | HNO3 | | | | | | | CHTR N | 10500 ML | 500 ML |
| 667 | STD 15C10-15 NITRIC ACID | HNO3 | | | | | | | NO 7 | 10250 ML | 250 ML |
| 664 | STD 15C10-19 | HNO3 | | | CORROSIVE | | | | CAB 26-3 | 10500 ML / 10100 ML | 600 ML |
| 612 | STD 15C10-19 NITRIC ACID | HNO3 | | | CORROSIVE | | | | CAB 41-1 | 120500 ML | 6000 ML |
| 442 | STD 15C11 | ZNCL2 | | | | | | | CAB 33-5 | 4850 ML | 200 ML |

Table A-4. 222-SA Chemical Inventory by Common Name. (sheet 28 of 35)

| REC. | COMMON NAME | FORMULA | CAS NUMBER | MSDS # | CLASSIFICATION | C | P | MATRIX | LOCATION | UNITS/SIZE | TOTAL |
|---|---|---|---|---|---|---|---|---|---|---|---|
| 380 | STD 16C10-1 | HCLO4 | | | CORROSIVE | | | | CAB 37 ARCHIVE | 101 LITER | 1 LITER |
| 1441 | STD 16C11 | TCE | | | | | | | CAB 33-5 | 1050 ML | 50 ML |
| 260 | STD 17C9-4 CD METAL | CD | | | POISON | Y | | HNO3 | CAB 37 ARCHIVE | 10125 ML | 125 ML |
| 1057 | STD 17C9-5 CADMIUM | CD | | | CORROSIVE | Y | | 2% HNO3 | CAB 27-3 | 10500 ML | 500 ML |
| 1578 | STD 18C15A | SO4 STOCK | | | | | | | FRIDG 2 | 10500 ML | 500 ML |
| 1431 | STD 19C11 | OHSTD | | | | | | | CAB 33-3 | 14025 ML | 350 ML |
| 1426 | STD 1C11 | HNO3 | | | | | | | CAB 33-3 | 6850 ML | 300 ML |
| 1325 | STD 1C11M NITRIC ACID | HNO3 | | | | | | | CAB 37-6 | 1050 ML | 50 ML |
| 1446 | STD 1C11O | HNO3 | | | | | | | CAB 33-6 | 301000 ML | 3000 ML |
| 1354 | STD 1C9-30 AMM | AMM SOL'N | | | | | | | CAB 37-6 | 101 LITER | 1 LITER |
| 1320 | STD 1C9-33 ALUMINUM | | | | | | | 2.16M HNO3 | CAB 37-6 | 10500 ML | 500 ML |
| 10 | STD 20C11T AA STD | | | | | | | | CAB 33-1 | 15025 ML | 475 ML |
| 787 | STD 20CB CERIC SULFATE | CES04 | | | | | | | CAB 23-1 | 60500 ML | 3000 ML |
| 1310 | STD 231C15C BORIC ACID STOCK SOL'N | | | | | | | | CAB 36-6 | 10250 ML | 250 ML |
| 396 | STD 23C15-C BORIC ACID | | | | CORROSIVE | | | | CAB 37 ARCHIVE | 10250 ML | 250 ML |
| 310 | STD 24C9-10 MNO2 | MNO2 | | | | | | HCL | CAB 37 ARCHIVE | 10500 ML | 500 ML |
| 1342 | STD 24C9-5 MANGANESE OXIDE | MN(MNO2) | | | | | | | CAB 37 ARCHIVE | 10100 ML | 100 ML |
| 1417 | STD 25C11 | AA STD 5 | | | | | | | CAB 33-1 | 15025 ML | 475 ML |
| 1418 | STD 26C11 | CNDTVTY | | | | | | | CAB 33-1 | 31020 ML | 620 ML |
| 18 | STD 26C11 AA STD | | | | | | | | CAB 33-1 | 9025 ML | 225 ML |
| 1349 | STD 26C13B RUTHENIUM CHLORIDE | RU(RUCL) | | | | | | .037 M HCL | CAB 37 ARCHIVE | 10250 ML | 250 ML |
| 1095 | STD 27C7-1 PHENYLMERCURIC ACETATE | | | | | | | H2O | CAB 37 ARCHIVE | 10125 ML | 125 ML |
| 1427 | STD 29C11 | F-CAH | | | | | | | CAB 33-2 | 10025 ML | 250 ML |
| 1346 | STD 2C10-30 HYDROCHLORIC ACID | HCL | | | | | | 1.25 M HCL | CAB 37-6 | 10500 ML | 500 ML |
| 616 | STD 2C10-41 HYDROCHLORIC ACID | HCL | | | CORROSIVE | | | | CAB 41-2 | 28500 ML | 1000 ML |
| 604 | STD 2C[illegible] SYN. FEAL | | | | | | | | COUNTER NO. END | 2825 ML | 50 ML |
| 1425 | STD 3C11B | FEAL | | | | | | | CAB 33-2 | 5825 ML | 125 ML |
| 868 | STD 3C15-A CHROMIUM | CR(CR(NO3)-9H2O | | | | Y | | H2O | CAB 23-4 | 10500 ML | 500 ML |
| 1415 | STD 31C10-2 | HNO3 | | | | | | | CAB 33-1 | 19025 ML / 101000 ML | 1455 ML |
| 1438 | STD 31C11 | 1BX-IFE | | | | | | | CAB 33-5 | 120250 ML | 3000 ML |
| 38 | STD 31C15 SODIUM FLUORIDE | NAF | 7681-49-4 | 1491 | POISON | | Y | | FRIG | 10500 ML | 500 ML |
| 1344 | STD 31C9-5 MAGNESIUM CHIPS | MG | | | | | | .500 M HNO3 | CAB 37-6 | 10250 ML | 250 ML |
| 1341 | STD 31C9-6 MAGNESIUM | MG | | | | | | | CAB 37-6 | 10100 ML | 100 ML |
| 1439 | STD 32C11 | 2BX | | | | | | | CAB 33-5 | 16850 ML | 900 ML |
| 1335 | STD 339C-AM RARE EARTH STOCK SOL'N | ND(ND2O3) | | | | | | 2% HCL | CAB 37 ARCHIVE | 10125 ML | 125 ML |
| 1332 | STD 33C9-A LANTHANUM | LA2O3 | | | | | | 10% HCL | CAB 37 ARCHIVE | 10100 ML | 100 ML |
| 1329 | STD 33C9-AM LANTHANUM LA(NO3)3-6H2O | LA(NO3)3-6H2O | | | | | | .100 H2O | CAB 37 ARCHIVE | 20125 ML | 250 ML |
| 316 | STD 33C9A6 ND2O3 | ND2O3 | | | | | | | CAB 37 ARCHIVE | 10125 ML | 125 ML |
| 1330 | STD 33C9P LA2O3 | LA(LA2O3) | | | | | | HCL | CAB 37-6 | 10100 ML | 100 ML |
| 1434 | STD 34C11 | ICP-1 | | | | | | | CAB 33-4 | 90100 ML | 900 ML |
| 600 | STD 35C10-2 NITRIC ACID | | | | | | | | N CNTR END | 101 LITER | 1 LITER |
| 1435 | STD 35C11 | ICP-2 | | | | | | | CAB 33-4 | 110100 ML | 1100 ML |
| 1421 | STD 36C11 | COMNO4 | | | | | | | CAB 33-2 | 8850 ML | 400 ML |
| 1071 | STD 36C9-2 SELENIUM | SE | | | | | | 2% HNO3 ULTREX | CAB 37-6 | 10250 ML | 250 ML |
| 526 | STD 36C9-3 HYDRID CALIB STOCK | | | | | | | | CAB 37 ARCHIVE | 10125 ML | 125 ML |
| 1428 | STD 37C11 | KOH | | | | | | | CAB 33-3 | 17025 ML | 425 ML |
| 1074 | STD 37C9-1 MERCURY | HG(HGIHCL2 | | | | | | 10% HNO3 | CAB 37-6 | 10250 ML | 250 ML |
| 615 | STD 38C10-3 HYDROCHLORIC ACID | HCL | | | CORROSIVE | | | | CAB 41-2 | 40500 ML | 2000 ML |
| 1419 | STD 38C11 | AFAM | | | | | | | CAB 33-2 | 168100 ML | 1600 ML |
| 1440 | STD 39C11 | NH-2BX | | | | | | | CAB 33-5 | 15650 ML | 750 ML |

Table A-4. 222-SA Chemical Inventory by Common Name. (sheet 29 of 35)

| REC. | COMMON NAME | FORMULA | CAS NUMBER | HSDS # | CLASSIFICATION | C | F | MATRIX | LOCATION | UNITS/SIZE | TOTAL |
|---|---|---|---|---|---|---|---|---|---|---|---|
| 1309 | STD 39C9 COBALT STOCK SOL'N | CO | | | | | | 2.85 M HNO3 | CAB 26-2 | 10500 ML | 500 ML |
| 1056 | STD 39C9-1 COLBALI | | | | | | | .10 ULTREX HNO3 | CAB 37 ARCHIVE | 10500 ML | 500 ML |
| 1337 | STD 3C9-15 IRON (NARI WIRE) | FE(NARI-WIRE) | | | | | | | CAB 37-6 | 10125 ML | 125 ML |
| 623 | STD 43C10 NITRIC ACID | HNO3 | | | CORROSIVE | | | | CAB 41 SHELF 3 | 101000 ML | 1000 ML |
| 419 | STD 43C11-16 NH3 CAN | NH3 | | | CORROSIVE | | | | CAB 37 ARCHIVE | 10100 ML | 100 ML |
| 1583 | STD 43C11-18 | NH3 CAN STOCK | | | | | | | FRIG DOOR TOP | 10100ML | 100 ML |
| 1430 | STD 44C11 | DIAMS | | | | | | | CAB 33-3 | 3050 ML | 150 ML |
| 1423 | STD 45C11 | F-18 | | | | | | | CAB 33-2 | 28025 ML | 700 ML |
| 1072 | STD 47C15 SILICON SOL'N #1 | SI | | | | | | | CAB 27-3 | 101 LITER | 1 LITER |
| 613 | STD 48C10-15 SULFURIC ACID | H2SO4 | | | CORROSIVE | | | | CAB 41-2 | 126500 ML | 6000 ML |
| 1584 | STD 48C11-1 | CL-CAN | | | | | | | FRIG DOOR BOTTOM | 1050 ML | 50 ML |
| 1086 | STD 48C8-1 PHENYLMERCURIC ACETATE IN DIOXANO | | | | | | | | CAB 37-6 | 10125 ML | 125 ML |
| 617 | STD 50C10-2 NITRIC ACID | HNO3 | | | CORROSIVE | | | | CAB 41-2 | 20500 ML | 1000 ML |
| 1437 | STD 51C11 | IBP | | | | | | | CAB 33-4 | 40100 ML | 400 ML |
| 1339 | STD 52C13A IRON 3 | FE | | | | | | HNO3 | CAB 37 ARCHIVE | 10250 ML | 250 ML |
| 1420 | STD 53C11 | CAD | | | | | | | CAB 33-2 | 92050 ML | 450 ML |
| 947 | STD 53C23 | KMNO4 | | | | | | | 102 | 150500 ML | 7500 ML |
| 622 | STD 54C10-1 SULFURIC ACID | H2SO4 | | | CORROSIVE | | | | CAB 41-3 | 101000 ML | 1000 ML |
| 29 | STD 55C15 TEST STD | CO3 | | | | | | | FRIG | 4050 ML | 200 ML |
| 642 | STD 57C3-4 LSR CARBON TETRACHLORIDE | CCL4 | 56-23-5 | 1102 | FLAMMABLE POISO | Y | Y | | CAB 19-3 | 101 LITER | 1 LITER |
| 1080 | STD 59C15-8 SILICON | SI | | | | | | | CAB 37 ARCHIVE | 10500 ML | 500 ML |
| 1424 | STD 62C11 | ZRO2 | | | | | | | CAB 33-2 | 4025 ML | 100 ML |
| 1433 | STD 65C11 | PDI-PH | | | | | | | CAB 33-4 | 150100 ML | 1500 ML |
| 24 | STD 69C11 | CO3 | | | | | | | FRIG | 8050 ML | 400 ML |
| 1321 | STD 6C10-23 SODIUM HYDROXIDE | NAOH | | | | | | | CAB 37-6 | 10100 ML | 100 ML |
| 597 | STD 6C10-32 SODIUM HYDROXIDE | | | | | | | | N CNTR | 10500 ML | 500 ML |
| 611 | STD 6C10-45 SODIUM HYDROXIDE | NAOH | | | CORROSIVE | | | | CAB 41-1 | 70500 ML | 3500 ML |
| 1133 | STD 6C10-47 | NAOH | | | CORROSIVE | | | | CAB 26-3 | 10500 ML | |
| 1391 | STD 6C11-L DIONEX LMCS SOL'N | | | | | | | | CAB 27-3 | 10100 ML | 100 ML |
| 1333 | STD 6C9-4 NEODYMIUM STOCK | ND2O3 | | | | | | 1 M HNO3 | CAB 37 ARCHIVE | 10250 ML | 250 ML |
| 1043 | STD 6OC-38 CHROMIUM STOCK SOL'N | CRCH2CR2O7 | | | | | | | BNCH TOP | 10500 ML | 500 ML |
| 25 | STD 70C11 IOC | % | | | | | | | FRIG | 6050 ML | 400 ML |
| 1397 | STD 70C14D | NH4CL/NH4OH STOCK SOL'N | | | | | | | CAB 34-1 | 10100 ML | 100 ML |
| 1343 | STD 73C13C STRONTIUM NITRATE | SR (SR(NO3)2 | | | | | | | CAB 37-6 | 10100 ML | 100 ML |
| 35 | STD 74C15B SODIUM FLUORIDE | NAF | 7681-49-4 | 1491 | POISON | | Y | | FRIG | 101 LITER | 1 LITER |
| 1579 | STD 75C15 | HI STOCK | | | | | | | FRIG 2 | 10500 ML | 500 ML |
| 1580 | STD 75C15 | CL STOCK | | | | | | | FRIG 2 | 10500 ML | 500 ML |
| 1581 | STD 75C15 | NH3 STOCK | | | | | | | FRIG 2 | 10500 ML | 500 ML |
| 33 | STD 75C15 F' SOL'N | % | | | | | | | FRIG SH-2 | 10500 ML | 500 ML |
| 31 | STD 75C15B | F | 7681-49-4 | 1491 | POISON | | | | FRIG | 10500 ML | 500 ML |
| 1400 | STD 79C15 | HNO3 | | | CORROSIVE | | | | CAB 34-1 | 10100 ML | 100 ML |
| 1582 | STD 7C110-18 | FO4 CAN STOCK | | | | | | | FRIG DOOR TOP | 10100 ML | 100 ML |
| 948 | STD 8-C3 ZR | ZR(ZROCL2) | | | | | | H2O | CAB 37 ARCHIVE | 10250 ML | 250 ML |
| 1429 | STD 8C11 | NOI | | | | | | | CAB 33-3 | 10025 ML | 250 ML |
| 1331 | STD 9-C4 COLBALT METAL | CO(METAL) | | | | | | HNO3 | CAB 37-6 | 10250 ML | 250 ML |
| 1111 | STD 99C3 MTCP (WAN) H2O | | | | | | | | CAB 37-6 | 10250 ML | 250 ML |
| 1427 | STD 9C11 | 115-OH | | | | | | | CAB 33-3 | 7025 ML | 175 ML |
| 1045 | STD 9C8 CERIC SULFATE | CESO4 | | | | | | | DENSITY BNCH TOP | 10100 ML | 100 ML |
| 1399 | STD L-10 NITRIC ACID | HNO3 | | | | | | ULTREX | CAB 34-1 | 10250 ML | 250 ML |

Table A-4. 222-SA Chemical Inventory by Common Name. (sheet 30 of 35)

| SEC. | COMMON NAME | FORMULA | CAS NUMBER | MSDS # | CLASSIFICATION | C | P | MATRIX | LOCATION | UNITS/SIZE | TOTAL |
|---|---|---|---|---|---|---|---|---|---|---|---|
| 1398 | STD L-10 SOL'N 13 | | | | | | | | CAB 34-1 | 10100 ML | 100 ML |
| 1256 | STEEL-ACID OPEN HEARTH | | | | | | | | CAB 13-4 | 1020 GM | 20 GM |
| 155 | STRONTIUM | SR | | | | | | | CAB 23-3 | 1050 ML | 50 ML |
| 797 | STRONTIUM | SR | | | CORROSIVE | | | 2% HCL | CAB 23-4 | 10500 ML | 500 ML |
| 814 | STRONTIUM | SR | 7647-01-0 | | CORROSIVE | | | 10% HCL | CAB 23-3 | 2050 ML | 100 ML |
| 826 | STRONTIUM | SR | | | CORROSIVE | | | 2% HNO3 | CAB 23-4 | 10500 ML | 500 ML |
| 878 | STRONTIUM | SR | | | CORROSIVE | | | 2% HCL | CAB 22-2 | 10500 ML | 500 ML |
| 334 | STRONTIUM ACETATE | SR(C2H3O2)2-1/2H2O | 543-94-2 | 2384 | CORROSIVE | | | | CAB 36 ARCHIVE | 20100 GM | 200 GM |
| 335 | STRONTIUM CARBONATE | SRCO3 | 1633-05-2 | 1520 | | | | | CAB 5-8 | 20500 GM | 1000 GM |
| 972 | STRONTIUM CARBONATE | SRCO3 | 1633-05-2 | 1520 | | | | | DESC 2 | 1050 GM | 50 GM |
| 1295 | STRONTIUM CARBONATE | SRCO3 | 1633-05-2 | 1520 | | | | | CAB 13-4 | 101 GM | 1 GM |
| 332 | STRONTIUM CHLORATE | SR(CLO3)2 | 7791-10-8 | | | | | | | 10500 GM | 500 GM |
| 336 | STRONTIUM CHLORIDE | SRCL2-6H2O | 10476-85-4 | 1521 | | | | | CAB 36 ARCHIVE | 10500 GM | 500 GM |
| 337 | STRONTIUM CHLORIDE | SRCL2-6H2O | 10476-85-4 | 1521 | | | | | CAB 5-8 | 100125 GM | 1250 GM |
| 494 | STRONTIUM CHLORIDE | SRCL2-6H2O | 10476-85-4 | 1521 | | | | | CAB 11-2 | 20125 GM | 250 GM |
| 1492 | STRONTIUM CYCLOHEXANEBUTYRATE | SR(O2C10H17)2 | | | | | | | 74 | 105 GM | 5 GM |
| 338 | STRONTIUM FLUORIDE | SRF2 | 7783-48-4 | 2156 | POISON | | Y | | CAB 36 ARCHIVE | 10100 GM | 100 GM |
| 495 | STRONTIUM FLUORIDE | SRF2 | 7783-48-4 | 2156 | POISON | | Y | | CAB 11-2 | 10500 GM | 500 GM |
| 1572 | STRONTIUM FLUORIDE | SRF2 | 7783-48-4 | 2156 | POISON | | | | CAB 12-5 | 2025 ML | 50 ML |
| 339 | STRONTIUM HYDROXIDE | SROH | 1311-10-0 | 1522 | | | | | CAB 36 ARCHIVE | 10500 GM | 500 GM |
| 340 | STRONTIUM NITRATE | SR(NO3)2 | 10042-76-9 | 1523 | OXIDIZER | | | | CAB 5-8 | 10500 GM | 500 GM |
| 456 | STRONTIUM NITRATE | SR(NO3)2 | 10042-76-9 | 1523 | OXIDIZER | | | | CAB 11-2 | 10500 GM | 500 GM |
| 1010 | STRONTIUM NITRATE | SR(NO3)2 | 10042-76-9 | 1523 | OXIDIZER | | | | DESC 5 | 1050 GM | |
| 1453 | STRONTIUM NITRATE | SR(NO3)2 | 10042-76-9 | 1523 | OXIDIZER | | | | CAB 12-5 | 2048 MG | 96 GM |
| 1669 | STRONTIUM NITRATE | SR(NO3)2 | 10042-76-9 | 1523 | OXIDIZER | | | | CAB 36 ARCHIVE | 30500 GM | 1500 GM |
| 1494 | STRONTIUM OXIDE | SRO | | | | | | | 75 | 1025 GM | 25 GM |
| 974 | STRONTIUM OXIDE VENTRON | SRO | | | | | | | DESC 3 | 1025 GM | 25 GM |
| 608 | STRONTIUM ROD | SR | | | FLAMMABLE | | | | CAB 7-3 | 10500 GM | 500 GM |
| 341 | SUCCINIC ACID | HO2CCH2CH2CO2H | 110-15-6 | 2389 | | | | | CAB 36 ARCHIVE | 40100 GM / 10250 GM | 650 GM |
| 1 | SULFAMIC ACID | H3NO3S | 5329-14-6 | 1623 | CORROSIVE | | | | 87 | 10500 ML | 500 ML |
| 344 | SULFAMIC ACID | NH2SO3H | 5329-14-6 | 1623 | CORROSIVE | | | | CAB 5-8 | 140500 GM | 7000 GM |
| 487 | SULFAMIC ACID | NH2SO3H | 5329-14-6 | 1623 | CORROSIVE | | | | CAB 12-3 | 70100 GM | 700 GM |
| 965 | SULFAMIC ACID | NH2SO3H | 5329-14-6 | 1623 | CORROSIVE | | | | DESC 2 | 10100 GM | 100 GM |
| 1021 | SULFAMIC ACID | NH3SO3 | 5329-14-6 | 1623 | CORROSIVE | | | | DESC 7 | 1030 GM | 30 GM |
| 1164 | SULFAMIC ACID | NH2SO3H | 5329-14-6 | 1623 | CORROSIVE | | | | CAB 31-3 | 10500 GM | 500 GM |
| 345 | SULFANILIC ACID | 4-(H2N)C6H4SO3H | 121-57-3 | 1697 | CORROSIVE | | | | CAB 5-8 | 1681006M | 1600 GM |
| 462 | SULFANILIC ACID | 4-NH2C6H4SO3H | 121-57-3 | 1697 | CORROSIVE | | | | CAB 11-3 | 10125 GM | 125 GM |
| 1566 | SULFATE | SO4 | 7757-82-6 | 16516 | CORROSIVE | | | | CAB 12-6 | 20100 ML | 200 ML |
| 796 | SULFATE STD | SO4 | 7757-82-6 | 16516 | CORROSIVE | | | H2O | CAB 23-4 | 20500 ML | 1000 ML |
| 1088 | SULFATE STD | SO4 | 7757-82-6 | 16516 | CORROSIVE | | | | CAB 37 ARCHIVE | 20500 ML | 1000 ML |
| 1173 | SULFOSALICYLIC S-ACID | HO3SC6H3-2(OH)(O2H-2 H2O | 97-05-2 | 1821 | CORROSIVE | | | | CAB 31-4 | 10500 GM | 500 GM |
| 346 | SULFOSALICYLIC-S ACID | HO3SC6H3-2-(OH)OCO2H -2H2O | 97-05-2 | 1821 | CORROSIVE | | | | CAB 5-8 | 100500 GM | 5000 GM |
| 472 | SULFOSALICYLIC-S ACID | HO3SC6H3-2-(OH)-CO2H -2H2O | 97-05-2 | 1821 | CORROSIVE | | | | CAB 6-3 | 130500 GM | 6500 GM |
| 16 | SULFURIC ACID | H2SO4 | 7664-93-9 | 1529 | CORROSIVE | | | | HD 4 | 20250 ML/10500 ML/10100 ML | 1100 ML |
| 576 | SULFURIC ACID | H2SO4 | 7664-93-9 | 1529 | CORROSIVE | | | | CAB 2 UNDER SINK | 40500 ML | 2000 ML |
| 606 | SULFURIC ACID | H2SO4 | 7664-93-9 | 1529 | CORROSIVE | | | | N. CNTR END | 10100 ML | 100 ML |
| 771 | SULFURIC ACID | H2SO4 | 7664-93-9 | 1529 | CORROSIVE | | | | CAB 37 ARCHIVE | 170100 ML | 1700 ML |

Table A-4. 222-SA Chemical Inventory by Common Name. (sheet 31 of 35)

| REC. | COMMON NAME | FORMULA | CAS NUMBER | MSDS # | CLASSIFICATION | C | P | MATRIX | LOCATION | UNITS/SIZE | TOTAL |
|---|---|---|---|---|---|---|---|---|---|---|---|
| 1352 | SULFURIC ACID | H2SO4 | 7664-93-9 | 1529 | CORROSIVE | | | | CAB 37 ARCHIVE | 20500 ML | 1000 ML |
| 1413 | SULFURIC ACID | H2SO4 | 7664-93-9 | 1529 | CORROSIVE | | | | CAB 34-6 | 10500 ML | 500 ML |
| 1363 | SURFASIL | | | | | | | 10% XYLENE | 150 | 3010 ML / 10100 ML | 330 ML |
| 1449 | TALC | | | | | | | | CAB 33-6 | 10500 GM | 500 GM |
| 808 | TANTALUM | TA | 7697-37-2 | | CORROSIVE | | | 5% HNO3/2% HF | CAB 23-3 | 2050 ML | 100 ML |
| 870 | TANTALUM | TA | | | | | | H2O | CAB 22-2 | 10500 ML | 500 ML |
| 1359 | TANTALUM | TA | | | | | | H2O | CAB 27-1 | 10500 ML | 500 ML |
| 1497 | TANTALUM (V) FLUORIDE | TAF5 | 7783-71-3 | | | | | | 75 | 1025 GM | 25 GM |
| 747 | TANTALUM METAL | TA | 7440-25-7 | 2985 | | | | | CAB 7-4 | 10.1 GM | .1 GM |
| 1496 | TANTALUM PENTACHLORIDE | TACL5 | 7721-01-9 | | CORROSIVE | | | | 75 | 10100 GM | 100 GM |
| 729 | TANTALUM RODS | TA | 7440-25-7 | 2985 | | | | | CAB 7-3 | 20.3 GM /10.1 GM | .7 GM |
| 730 | TANTALUM SHEET | TA | 7440-25-7 | 2985 | | | | | CAB 7-3 | 1010 GM | 10 GM |
| 731 | TANTALUM WIRE | TA | 7440-25-7 | 2985 | | | | | CAB 7-3 | 10.1 GM | .1 GM |
| 748 | TANTALUM WIRE | TA | 7440-25-7 | 2985 | | | | | CAB 7-4 | 10.2 GM | .2 GM |
| 223 | TARTARIC-D ACID | HOCO(CHOH)2COOH | 87-69-4 | 2168 | | | | | CAB 6-1 | 70500 GM | 3500 GM |
| 463 | TARTARIC-D ACID | HOCO(CHOH)2COOH | 87-69-4 | 2168 | | | | | CAB 11-3 | 10500 GM | 500 GM |
| 1172 | TARTARIC-D ACID | (HOCO)(CHOH)2(COOH) | 87-69-4 | 2168 | | | | | CAB 31-4 | 10500 GM | 500 GM |
| 1105 | TCL STOCK SOLUTION | | | | | | | | CAB 27-4 | 10500 ML | 500 ML |
| 750 | TELLURIUM PIECES | TE | 13494-80-9 | 2245 | POISON FLAMMABL | | | | CAB 7-4 | 10100 GM | 100 GM |
| 756 | TELLURIUM POWDER | TE | 13494-80-9 | 2245 | POISON FLAMMABL | | | | CAB 7-4 | 101 OZ. | 1 OZ. |
| 749 | TELLURIUM SHOT | TE | 13494-80-9 | 2245 | POISON FLAMMABL | | | | CAB 7-4 | 1050 GM | 50 GM |
| 895 | TERBIUM | TB | | | CORROSIVE | | | 2% HNO3 | CAB 22-4 | 20500 ML | 1000 ML |
| 1495 | TERBIUM NITRATE | TB(NO3)4 | 13596-35-5 | | OXIDIZER | | | | 75 | 101 GM | 1 GM |
| 1471 | TERBIUM OXIDE | TB4O7 | 12037-01-3 | | | | | | 74 | 10100 MG | 100 MG |
| 1498 | TERBIUM OXIDE | TB4O7 | 12037-01-3 | | | | | | 75 | 305 GM | 15 GM |
| 1371 | TETRACHLOROETHYLENE | | | | POISON FLAMMABL | Y | | | BNCH TOP BY DENSITY METER | 2020 ML | 40 ML |
| 347 | TETRACHLOROPHTHALIC ACID | | 117-08-8 | | CORROSIVE | Y | | | CAB 36 ARCHIVE | 10200 GM | 200 GM |
| 1364 | TETRACHOROETHYLENE | CL2C=CCL2 | 127-18-4 | 1410 | CARCINOGEN | Y | | | 152 | 202 LITER | 4 LITER |
| 1278 | TETRAIO-2',4',5',7',-DOFLUORESCEIN | O-HOC)C6H4C:C6H-2,4-12-3(O)OC6H-5,7-12-6-OH | | | | | | | CAB 13-3 | 1025 GM | 25 GM |
| 1277 | TETRAMETHYL-AMMONIUM IODIDE | (CH3)4NI | 75-58-1 | | | | | | CAB 13-3 | 10100 GM | 100 GM |
| 681 | TETRAPROPYLAMMONIUM HYDROXIDE | (CH3CH2CH2)4NOH | 4499-86-9 | | POISON CORROSIV | | | | CAB 20-4 | 301 LITER /250 ML | 3LIT+250ML |
| 1638 | TGA METAL ALUMEL | | | | | | | | CAB 21-5 | 100.05 GM | 0.05 GM |
| 1640 | TGA METAL MISAT-50 | | | | | | | | CAB 21-5 | 101.20 GM | 1.20 GM |
| 1642 | TGA METAL IRON | | | | | | | | CAB 21-5 | 100.20 GM | 0.20 GM |
| 1639 | TGA METAL NICKEL | | | | | | | | CAB 21-5 | 100.15 GM | 0.15 GM |
| 1641 | TGA METAL PERMALLOY | | | | | | | | CAB 21-5 | 100.80 GM | 0.80 GM |
| 524 | THENOYLTRIFLOROACETONE | C8H5O2F3S | 326-91-0 | 1728 | | | | | 62 | 201 KG / 30100 GM | 2300 GM |
| 1042 | THERMOMETERS MORWRY | | | | | | | | 118 | 31 THERMOMETERS | 31 THERMO |
| 348 | THIOACETAMIDE | CH3CSNH2 | 62-55-5 | 2291 | POISON | Y | | | CAB 36 ARCHIVE | 10125 GM / 10500 GM | 625 GM |
| 1279 | THIOUREA | NH2CSNH2 | 62-56-6 | 1539 | POISON | Y | | | CAB 13-3 | 10250 GM | 250 GM |
| 1271 | THORIN | 2.(HO)[illegible]C6-H4N:N-1-C10H4-2-OH-3,6 | 132-33-2 | | | | | | CAB 13-3 | 1025 GM | 25 GM |
| 1272 | THORIUM-BORATE AMARANTH DYE | | | | | | | | CAB 13-3 | 102 GM | 2 GM |
| 910 | THULIUM | TM | | | CORROSIVE | | | 2% HNO3 | CAB 22-4 | 20500 ML | 1000 ML |
| 1500 | THULIUM CHLORIDE | TMCL3 | 13537-18-3 | | | | | | 75 | 102GM | 2 GM |
| 1472 | THULIUM OXIDE | TM2O3 | 12036-44-1 | | | | | | 74 | 10100 MG | 100 MG |
| 1499 | THULIUM OXIDE | TM2O3 | 12036-44-1 | | | | | | 75 | 101 GM | 1 GM |
| 1274 | THYMOL BLUE | | 76-61-9 | | | | | | CAB 13-3 | 105 GM | 5 GM |

Table A-4. 222-SA Chemical Inventory by Common Name. (sheet 32 of 35)

| REC. | COMMON NAME | FORMULA | CAS NUMBER | NSDS # | CLASSIFICATION | C | P | MATRIX | LOCATION | UNITS/SIZE | TOTAL |
|---|---|---|---|---|---|---|---|---|---|---|---|
| 1273 | THYMOLPHTHALEIN | C28H30O4 | 125-20-2 | 1627 | | | | | CAB 13-3 | 2025 GM | 50 GM |
| 1268 | THYMOLSULFONEPHTHALEIN | (C6H4SO2OC(C6H2-2-CH3-4-OH-5CH(CH3)2) | | | | | | | CAB 13-3 | 105 GM | 5 GM |
| 792 | TIN | SN | | | CORROSIVE | | | 20% HCL | CAB 23-1 | 10500 ML | 500 ML |
| 793 | TIN | SN | | | CORROSIVE | | | 20% HCL | CAB 37 ARCHIVE | 40500 ML | 2000 ML |
| 819 | TIN | SN | 7647-01-0 | | CORROSIVE | | | 60% HCL | CAB 23-3 | 2050 ML | 100 ML |
| 824 | TIN | SN | | | CORROSIVE | | | 5% HNO3 | CAB 23-4 | 20500 ML | 1000 ML |
| 829 | TIN | SN | | | CORROSIVE | | | 20% HCL | CAB 23-4 | 10500 ML | 500 ML |
| 716 | TIN METAL GRANULAR | SN | 7440-31-5 | 2064 | FLAMMABLE | | | | CAB 7-2 | 20100 GM | 400 GM |
| 715 | TIN MOSSY | SN | 7440-31-5 | 2064 | FLAMMABLE | | | | CAB 7-2 | 10125 GM / 1010 GM | 135 GM |
| 717 | TIN SHOT | SN | 7440-31-5 | 2064 | FLAMMABLE | | | | CAB 7-2 | 10100 GM / 1025 GM | 125 GM |
| 945 | TISAB | | | | | | | | CAB 22-6 | 103875 ML | 3875 ML |
| 1405 | TISAB V(5) | | | | | | | | CAB 34-3 | 80500 ML | 4000 ML |
| 802 | TITANIUM | TI | 7647-01-0 | | CORROSIVE | | | 40% HCL | CAB 23-3 | 1050 ML | 50 ML |
| 875 | TITANIUM | TI | | | | | | H2O | CAB 22-2 | 10500 ML | 500 ML |
| 1046 | TITANIUM | TI | | | | | | H2O | CAB 27-1 | 10500 ML | 500 ML |
| 23 | TITANIUM CHLORIDE | TICL4 | 7550-45-0 | 2080 | POISON CORROSIV | | | | HD 4 | 1 @ 1 L | 1 L |
| 757 | TITANIUM CLEANED | TI | 7440-31-5 | 2064 | FLAMMABLE | | | | CAB 7-4 | 105 GM | 5 GM |
| 711 | TITANIUM HYDRIDE | TIH2 | 7704-98-5 | | FLAMMABLE | | | | CAB 7-4 | 10100 GM | 100 GM |
| 714 | TITANIUM HYDRIDE MESH POWDER | TIH2 | 7704-98-5 | | FLAMMABLE | | | | CAB 7-4 | 201000 GM | 2000 GM |
| 393 | TITANIUM OXIDE | TIO2 | 1317-80-2 | 1540 | | | | | CAB 36 ARCHIVE | 102 GM | 2 GM |
| 750 | TITANIUM POWDER | TI | 7440-32-6 | 2065 | FLAMMABLE | | | | CAB 7-4 | 10100 GM | 100 GM |
| 347 | TITANIUM SULFATE | TIOSO4H2SO4-8H2O | | | | | | | CAB 36 ARCHIVE | 10500 GM / 10100 GM | 600 GM |
| 740 | TITANIUM WIRE | TI | 7440-32-6 | 2065 | FLAMMABLE | | | | CAB 7-3 | 1075 GM / 1025 GM | 100 GM |
| 685 | TOLUENE | C3H5CH3 | 108-88-3 | 1560 | POISON FLAMMABLE | Y | | | CAB 20-5 | 284 LITER | 8 LITERS |
| 1366 | TOLUENE | C3H5CH3 | 108-88-3 | 1560 | POISON FLAMMABL | Y | | | 150 | 205 ML | 10 ML |
| 658 | TOLUENE PURIFIED | C6H5CH3 | 108-88-3 | 1560 | FLAMMABLE POISO | Y | | | CAB 20-1 | 201 LITER | 2 LITER |
| 921 | TRACE ELEMENTS | | | | | | | H2O | CAB 22-5 | 10500 ML | 500 ML |
| 1605 | TRACE METAL (WP475 CONC 2) | | | | | | | | CAB 21-2 | 6020 ML | 120 ML |
| 1614 | TRACE METAL (WS378 CONC 12 83562 QC WP 287) | | | | | | | | CAB 21-3 | 1020 ML | 20 ML |
| 1613 | TRACE METAL (WS378 CONC 4) | | | | | | | | CAB 21-3 | 1020 ML | 20 ML |
| 1562 | TRACE METAL 58C16 | | | | | | | | GROUT CART RM A | 10500 ML | 500 ML |
| 1606 | TRACE METALS (WP475 CONC 3) | | | | | | | | CAB 21-2 | 5020 ML | 100 ML |
| 1604 | TRACE METALS (WP475 CONC1) | | | | | | | | CAB 21-2 | 8020 ML | 160 ML |
| 1607 | TRACE METALS (WP980 CONC 2) | | | | | | | | CAB 21-2 | 8020 ML | 160 ML |
| 1600 | TRACE METALS (WS-378) | | | | | | | | CAB 21-2 | 10020 ML | 200 ML |
| 1617 | TRACE METALS EPA QC (WP1103 III:CONC 1) | | | | | | | | CAB 21-3 | 5020 ML | 100 ML |
| 1618 | TRACE METALS EPA QC (WP1103 III:CONC 2) | | | | | | | | CAB 21-3 | 5020 ML | 100 ML |
| 1615 | TRACE METALS EPA QC (WP284 I:CONC 2) | | | | | | | | CAB 21-3 | 5020 ML | 100 ML |
| 1616 | TRACE METALS EPA QC (WP284 I:CONC 2) | | | | | | | | CAB 21-3 | 3020 ML | 60 ML |
| 1628 | TRACE METALS WP980 CONC. 1 | SB.AG.TI | | | | | | | CAB 21-5 | 9020 ML | 180 ML |
| 1629 | TRACE METALS WS378 CONC. 1 | | | | | | | | CAB 21-5 | 10020 ML | 200 ML |
| 151 | TRANS-1,2-DIAMINOCYCLOHEXANE-N,N,N1,N1,-TETRAACETIC ACID | C6H10(N(CH2CO2H)2)2-H2O | 1121-22-8 | 1947 | CORROSIVE | | | | CAB 3-1 | 230100 GM | 2300 GM |
| 661 | TRI-BUTYL PHOSPATE IN NPH 16.66% | | | | FLAMMABLE | | | | CAB 20-2 | 10500 ML | 500 ML |
| 342 | TRI-BUTYL PHOSPHATE | (CH3(CH2)3O)3P(O) | | | CORROSIVE | | | | CAB 24-2 | 10250 ML | 250 ML |
| 651 | TRI-BUTYL PHOSPHATE | (CH3(CH2)3O)3P(O) | 126-73-8 | 1739 | FLAMMABLE | | | | CAB 19-5 | 281 GAL | 2 GALLON |
| 656 | TRI-BUTYL PHOSPHATE | (CH3CH2CH2CH2O)3PO | 126-73-8 | 1739 | FLAMMABLE | | | | CAB 20-1 | 40500 ML | 2000 ML |
| 660 | TRI-BUTYL PHOSPHATE | (CH3(CH2)3O)3P(O) | 126-73-8 | 1739 | FLAMMABLE | | | | CAB 20-2 | 30100 ML / 10500 ML | 3500 ML |
| 1394 | TRI-BUTYL PHOSPHATE | (CH3(CH2)3O)3P(O) | | | FLAMMABLE | | | | 68 | 107 LITER | 7 LITER |

Table A-4. 222-SA Chemical Inventory by Common Name. (sheet 33 of 35)

| REC. | COMMON NAME | FORMULA | CAS NUMBER | MSDS # | CLASSIFICATION | C | P | MATRIX | LOCATION | UNITS/SIZE | TOTAL |
|---|---|---|---|---|---|---|---|---|---|---|---|
| 52 | TRI-BUTYL PHOSPHATE IN NPH (25%-75%) | | | | FLAMMABLE | | | | CAB 24-2 | 10500 ML | 500 ML |
| 527 | TRI-BUTYL PHOSPHATE IN NPH 30% | | | | FLAMMABLE | | | | CAB 24-2 | 10100 ML | 100 ML |
| 677 | TRI-ISO-OCTYLAMINE | (C8H17)3N | 25549-16-0 | 1577 | | | | | CAB 20-4 | 60500 GM | 3000 GM |
| 655 | TRI-ISO-OCTYLAMINE | (C8H17)3N | 25549-16-0 | 1577 | | | | | CAB 20-1 | 60500 ML | 3000 ML |
| 664 | TRI-ISO-OCTYLAMINE | (C8H17)3N | 25549-16-0 | 1577 | | | | | CAB 20-3 | 110500 ML | 5500 ML |
| 657 | TRI-N-OCTYLAMINE | (CH3(CH2)7)3N | 1116-76-3 | 2066 | | | | | CAB 20-1 | 120500 ML | 6000 ML |
| 1360 | TRI-N-OCTYLPHOSPHINE OXIDE | (C8H17)3P(O) | 78-50-2 | 1582 | | | | | CAB 6-1 | 100100 GM | 1800 GM |
| 626 | TRICAPRYLMETHYL-AMMONIUM CHLORIDE | CH3N(CL)(C8H17)3 | 5137-55-3 | 1737 | POISON FLAMMABL | | | | CAB 19-1 | 10500 GM | 500 GM |
| 415 | TRICHLOROACETIC ACID | | | | CORROSIVE | | | | CAB 37 ARCHIVE | 10125 GM | 125 GM |
| 351 | TRICHLOROACETIC | CCL3COOH | 76-03-09 | 1882 | CORROSIVE | | | | CAB 36 ARCHIVE | 10125 GM | 125 GM |
| 54 | TRIETHANOLAMINE | (HOCH2CH2)3N | 102-71-6 | 1572 | FLAMMABLE | | | | CAB 24-3 | 80500 ML | 4000 ML |
| 533 | TRIETHYLAMINE | (C2H5)3N | 121-44-8 | | FLAMMABLE CORRO | | | | 61 | 102 KG | 2 KG |
| 673 | TRIETHYLAMINE | (C2H5)3N | 128-44-8 | 1573 | FLAMMABLE POISO | | | | CAB 20-4 | 102 KG | 2 KG |
| 523 | TRIOCTYLPHOSPHINE OXIDE | (CH3(CH2)7)3PO | 78-50-2 | 1582 | | | | | 62 | 30250 GM / 160100 GM | 2350 GM |
| 1340 | TRIOCTYLPHOSPHINE SULFIDE | (CH3(CH2)7)3PS | | | | | | | CAB 37 ARCHIVE | 1050 ML | 50 ML |
| 354 | TRIS HYDROXYMETHYL-AMINOMETHANE | NH2C(CH2OH)3 | 77-86-1 | 1910 | POISON | | | | CAB 6-1 | 80500 GM | 4000 GM |
| 464 | TRIS HYDROXYMETHYL-AMINOMETHANE | NH2C(CH2OH)3 | 77-86-1 | 1910 | POISON | | | | CAB 11-3 | 20500 GM | 1000 GM |
| 953 | TRIS HYDROXYMETHYL-AMINOMETHANE | NH2C(CH2OH)3 | 77-86-1 | 1910 | POISON | | | | DESC 1 | 10100 GM | 100 GM |
| 1301 | TRIS HYDROXYMETHYL-AMINOMETHANE | NH2C(CH2OH)3 | 77-86-1 | 1910 | POISON | | | | CAB 13-4 | 4050 GM | 200 GM |
| 759 | TRIS-2-HYDROXYACETOPHENONO CHROMIUM | | | | | | | | CAB 7-4 | 1090 GM | 90 GM |
| 944 | TRITON N-101 | | | 12502 | CORROSIVE | | | | CAB 22-6 | 103875 ML | 3875 ML |
| 842 | TUNGSTEN | W | 7697-37-2 | | CORROSIVE | | | 7% HNO3/4% HF | CAB 23-3 | 2050 ML | 100 ML |
| 751 | TUNGSTEN METAL | W | 7440-33-7 | 2734 | | | | | CAB 7-4 | 20100 GM | 200 GM |
| 1450 | TUNGSTEN OXIDE | WO3H2O | 7440-33-7 | 2734 | | | | | CAB 36 ARCHIVE | 1010 GM | 10 GM |
| 742 | TUNGSTEN WIRE | W | 7440-33-7 | 2734 | | | | | CAB 7-3 | 10127 GM | 127 GM |
| 352 | TUNGSTIC ACID | H2WO4 | 7783-03-1 | 3362 | | | | | CAB 6-2 | 10500 GM | 500 GM |
| 353 | UREA | NH2CONH2 | 57-13-6 | 1773 | | | | | CAB 36 ARCHIVE | 10500 GM | 500 GM |
| 535 | USED RESIN | AG-50W-X4 | | | | | | | 62 | 202 LB | 4LB(904816 |
| 970 | VANADATE REAGENT | | | | | | | | CAB 37 ARCHIVE | 10500 ML | 500 ML |
| 1263 | VANADIUM (IV) SULFATE OXIDE | VOSO4 | | | | | | | CAB 6-2 | 50250 GM | 1250 GM |
| 355 | VANADIUM PENT OXIDE | V2O5 | 1314-62-1 | 1775 | POISON | | | | CAB 36 ARCHIVE | 10100 GM | 100 GM |
| 471 | VANADYL SULFATE | VOSO4-2H2O | 27774-13-6 | 2262 | | | | | CAB 11-4 | 10100 GM | 100 GM |
| 466 | VANADYL SULFATE 2-HYDRATE | VOSO4-2H2O | 27774-13-6 | 2262 | | | | | CAB 6-2 | 310100 GM | 3100 GM |
| 1375 | VERSENE | | | | | | | | BNCH TOP BY DENSITY METER | 100000 ML | 8000 ML |
| 1084 | VIRCO-PET-20 | | | | HAZARDOUS | | | | CAB 37-6 | 10125 ML | 125 ML |
| 869 | VISCOSITY STD | | | | | | | | CAB 22-1 | 70600 ML | 4200 ML |
| 11 | WASTE | | | | CORROSIVE | | | | HD 4 | 104 LITER | 4 LITER |
| 12 | WASTE | | | | CORROSIVE | | | | HD 4 | 104 LITER | 4 LITER |
| 45 | WASTE | | | | | | | | HD 2 | 104 LITER | 4 LITER |
| 46 | WASTE | | | | | | | | HD 2 | 104 LITER | 4 LITER |
| 47 | WASTE | | | | | | | | HD 2 | 104 LITER | 4 LITER |
| 48 | WASTE | | | | | | | | HD 2 | 104 LITER | 4 LITER |
| 55 | WASTE | HNO3/HCL | | | CORROSIVE | | | | CAB 25-1 | 104 LITER | 4 LITER |
| 56 | WASTE | HNO3/HCL | | | CORROSIVE | | | | CAB 25-1 | 104 LITER | 4 LITER |
| 57 | WASTE | HNO3/HCL | | | CORROSIVE | | | | CAB 25-1 | 104 LITER | 4 LITER |
| 58 | WASTE | DENSITY AQ | | | CORROSIVE | | | | CAB 25-1 | 104 LITER | 4 LITER |
| 59 | WASTE | HNO3/HCL | | | CORROSIVE | | | | CAB 25-1 | 104 LITER | 4 LITER |
| 60 | WASTE | NAOH | | | CORROSIVE | | | | CAB 25-1 | 104 LITER | 4 LITER |
| 61 | WASTE | HNO3 | | | CORROSIVE | | | | CAB 25-1 | 104 LITER | 4 LITER |
| 62 | WASTE | ALCOHOL | | | FLAMMABLE | | | | CAB 25-1 | 104 LITER | 4 LITER |

# Table A-4. 222-SA Chemical Inventory by Common Name. (sheet 34 of 35)

| REC. | COMMON NAME | FORMULA | CAS NUMBER | MSDS # | CLASSIFICATION | C | P | MATRIX | LOCATION | UNITS/SIZE | TOTAL |
|---|---|---|---|---|---|---|---|---|---|---|---|
| 63 | WASTE | | | | | | | | CAB 25-1 | 104 LITER | 4 LITER |
| 64 | WASTE | | | | | | | | CAB 25-1 | 104 LITER | 4 LITER |
| 65 | WASTE | | | | | | | | CAB 25-1 | 104 LITER | 4 LITER |
| 66 | WASTE | | | | | | | | CAB 25-1 | 104 LITER | 4 LITER |
| 67 | WASTE | | | | | | | | CAB 25-2 | 104 LITER | 4 LITER |
| 68 | WASTE | | | | | | | | CAB 25-2 | 104 LITER | 4 LITER |
| 69 | WASTE | | | | | | | | CAB 25-2 | 104 LITER | 4 LITER |
| 70 | WASTE | | | | | | | | CAB 25-2 | 104 LITER | 4 LITER |
| 71 | WASTE | | | | | | | | CAB 25-2 | 104 LITER | 4 LITER |
| 72 | WASTE | | | | | | | | CAB 25-2 | 104 LITER | 4 LITER |
| 73 | WASTE | | | | | | | | CAB 25-2 | 104 LITER | 4 LITER |
| 74 | WASTE | | | | | | | | CAB 25-2 | 104 LITER | 4 LITER |
| 75 | WASTE | | | | | | | | CAB 25-2 | 104 LITER | 4 LITER |
| 76 | WASTE | | | | | | | | CAB 25-2 | 104 LITER | 4 LITER |
| 77 | WASTE | | | | | | | | CAB 25-2 | 104 LITER | 4 LITER |
| 78 | WASTE | | | | | | | | CAB 25-3 | 104 LITER | 4 LITER |
| 79 | WASTE | | | | | | | | CAB 25-3 | 104 LITER | 4 LITER |
| 986 | WASTE | | | | CORROSIVE | | | | HD 2 | 101 LITER | 1 LITER |
| 987 | WASTE | | | | FLAMMABLE | | | | HD 3 | 18500 ML | 500 ML |
| 1395 | WASTE | | | | | | | | HD 1 | 781 GAL | 7 GALLONS |
| 1548 | WASTE ALSA-0073 | | | | | | | | | | |
| 1549 | WASTE ALSA-0073 | | | | | | | | CAB 25-1 | 10 CONTAINERS AMOUNT UNKNOWN | ?????? |
| 1369 | WASTE ALSA-0076 | | | | | | | | BNCH TOP BY DENSITY METER | 101 LITER | 1 LITER |
| 1547 | WASTE ALSA-0091 | | | | | | | | CAB 25-3 | 304 LITER | 12 LITER |
| 1370 | WASTE ALSA-0095 | | | | | | | | BNCH TOP BY DENSITY METER | 103 LITER | 3 LITER |
| 1356 | WASTE ALSA-0104 | | | | CORR/GW | | | | ORGANIC BNCH TOP | 101 GAL. | 1 GAL. |
| 1357 | WASTE ALSA-0105 | | | | CORR/GW | | | | ORGANIC BNCH TOP | 101 GAL. | 1 GAL. |
| 1358 | WASTE ALSA-0106 | | | | CORR/GW | | | | ORGANIC BNCH TOP | 101 GAL | 1 GAL. |
| 1355 | WASTE ALSA-0107 | | | | CORR/GW | | | | ORGANIC BNCH TOP | 101 GAL. | 1 GAL. |
| 609 | WASTE ALSA-59 | | | | | | | | HD 1 | 101 GAL | 1 GALLON |
| 1554 | WASTE HAZARDOUS ICP STANDARD | | | | CORROSIVE | | | | CAB 25-1 | 38500 ML | 1500 ML |
| 1553 | WASTE HAZARDOUS KCN | KCN | | | POISON | | | | CAB 25-1 | 18250 ML | 250 ML |
| 381 | WASTE RHODANIE | | | | | | | | HD 2 | 18100 ML | 100 ML |
| 946 | WASTE XYLENOL ORANGE | | | | | | | | HD 2 | 18250 ML | 250 ML |
| 962 | WASTE ZR SPADNS | | | | | | | | HD 2 | 18250 ML | 250 ML |
| 545 | WESSON OIL (VEGI) | | | | | | | | KITCHEN CABINET | 1624 OZ. | 24 OZ. |
| 566 | WOOL WAX | | | | | | | | WOKENS BATHROOM | 108 OZ. | 8 OZ. |
| 51 | XYLENE | C6H4(CH3)2 | 1330-20-7 | 1592 | FLAMMABLE | | | | CAB 24-2 | 304 LITER | 20 LITER |
| 650 | XYLENE | C6H4(CH3)2 | 1330-20-7 | 1592 | FLAMMABLE | | | | CAB 19-4 | 104 LITER | 4 LITER |
| 583 | XYLENOL | (CH3)2C6H3OH | 526-75-0 | | POISON | | | | CAB 15 | 1850 ML | 50 ML |
| 1264 | XYLENOL ORANGE | C31H32N2O13S | 1611-35-4 | | | | | | CAB 13-3 | 9810 GM | 90 GM |
| 672 | XYLOL | | | | | | | | CAB 20-3 | 781 GAL | 2 GALLONS |
| 919 | YTTERBIUM | YB | | | CORROSIVE | | | 2% HNO3 | CAB 22-4 | 28500 ML | 1000 ML |
| 1501 | YTTERBIUM CHLORIDE | YBCL3-6H2O | 10361-91-8 | | | | | | 75 | 1810 GM | 10 GM |
| 1502 | YTTERBIUM NITRATE | YB(NO3)3-5H2O | 35725-34-9 | | OXIDIZER | | | | 75 | 1810 GM | 10 GM |
| 1473 | YTTERBIUM OXIDE | YB2O3 | 1314-37-0 | | | | | | 74 | 18100 MG | 100 MG |
| 1503 | YTTERBIUM OXIDE | YB2O3 | 1314-37-0 | | | | | | 75 | 185 GM | 5 GM |
| 231 | YTTRIUM | Y | 7647-01-0 | | CORROSIVE | | | 10% HCL | CAB 23-3 | 2850 ML | 100 ML |
| 912 | YTTRIUM | Y | | | CORROSIVE | | | 2% HNO3 | CAB 22-4 | 28500 ML | 1000 ML |
| 488 | YTTRIUM NITRATE | Y(NO3)3-3H2O | 13494-98-9 | 2155 | OXIDIZER | | | | CAB 12-3 | 2850 GM | 100 GM |

# Table A-4. 222-SA Chemical Inventory by Common Name. (sheet 35 of 35)

| REC. | COMMON NAME | FORMULA | CAS NUMBER | MSDS # | CLASSIFICATION | C | P | MATRIX | LOCATION | UNITS/SIZE | TOTAL |
|---|---|---|---|---|---|---|---|---|---|---|---|
| 1504 | YTTRIUM NITRATE | Y2(NO3)3 | 13494-98-9 | 2153 | OXIDIZER | | | | 75 | 1825 GM | 25 GM |
| 924 | YTTRIUM OXIDE | Y2O3 | 1314-36-9 | 1579 | | | | | CAB 36 ARCHIVE | 181 GM | 1 GM |
| 1460 | YTTRIUM OXIDE | Y2O3 | 1314-36-9 | 1579 | | | | | 74 | 145 GM / 182 GM | 7 GM |
| 1505 | YTTRIUM OXIDE | Y2O3 | 1314-36-9 | 1579 | | | | | 75 | 1825 GM/4819 GM/28250GM/18506GM | 615 GM |
| 641 | ZAPON THINNER | | | | | | | | CAB 19-3 | 181 LITER | 1 LITER |
| 769 | ZINC | ZN | | | | | | | CAB 37 ARCHIVE | 68100 ML | 600 ML |
| 811 | ZINC | ZN | 7647-01-0 | | CORROSIVE | | | 10% HCL | CAB 23-3 | 2850 ML | 100 ML |
| 863 | ZINC | ZN | | | CORROSIVE | | | 2% HNO3 | CAB 23-4 | 28500 ML | 1000 ML |
| 879 | ZINC | ZN | | | CORROSIVE | | | 2% HCL | CAB 22-2 | 18500 ML | 500 ML |
| 1573 | ZINC | ZN | | | | | | | CAB 23-3 | 1850 ML | 50 ML |
| 1134 | ZINC ACETATE | (CH3CO2)2ZN-2H2O | 5970-45-6 | 2409 | | | | | CAB 24-2 | 18250 ML | 250 ML |
| 39 | ZINC CHLORIDE | ZNCL2 | 7646-85-7 | 1600 | POISON | | | | HD 1 | 18500 ML | 500 ML |
| 299 | ZINC CHLORIDE | ZNCL2 | 7646-85-7 | 1600 | POISON | | | | CAB 6-4 | 702500 GM | 17500 GM |
| 356 | ZINC CHLORIDE | ZNCL2 | 7647-85-7 | 1600 | POISON | | | | CAB 6-2 | 78500 GM | 3500 GM |
| 1670 | ZINC CHLORIDE | ZNCL2 | 7646-85-7 | 1600 | POISON | | | | CAB 36 ARCHIVE | 28500 GM | 1000 GM |
| 1365 | ZINC CHLORIDE STOCK SOL'N | ZNCL2 | 7646-85-7 | 1600 | POISON | | | | 152 | 1850 ML / 403.5 LITER | 14 L/50 ML |
| 733 | ZINC CLEANED | ZN | 7440-66-6 | 2315 | | | | | CAB 7-3 | 18.5 GM / 2810 GM | 20.5 GM |
| 1275 | ZINC DITHIOL | | | | | | | | CAB 13-3 | 381 GM | 3 GM |
| 735 | ZINC GRANULAR | ZN | 7440-66-6 | 2315 | | | | | CAB 7-3 | 18500 GM /38454 GM /18665.7 GM | 2527.7 GM |
| 736 | ZINC METAL MOSSY | ZN | 7440-66-6 | 2315 | | | | | CAB 7-3 | 18454 GM | 454 GM |
| 662 | ZINC OXIDE | ZNO2 | 1314-13-2 | 2358 | | | | | CAB 36 ARCHIVE | 181 GM | 1 GM |
| 734 | ZINC POWDER | ZN | 7440-66-6 | 2315 | | | | | CAB 7-3 | 18453.6 GM | 453.6 GM |
| 732 | ZINC SHOT LEAD PROF | ZN | 7440-66-6 | 2315 | | | | | CAB 7-3 | 48100 GM | 400 GM |
| 357 | ZINC SULFATE | ZNSO4-7H2O | 7446-20-0 | 1868 | POISON | | | | CAB 6-2 | 18500 GM | 500 GM |
| 465 | ZINC SULFATE | ZNSO4-7H2O | 7446-20-0 | 1868 | POISON | | | | CAB 11-3 | 18500 GM | 500 GM |
| 1671 | ZINC SULFATE | ZNSO4-7H2O | 7446-20-0 | 1868 | POISON | | | | CAB 36 ARCHIVE | 18500 GM | 500 GM |
| 745 | ZIRCALOY METAL | | | | | | | | CAB 7-4 | 1810 GM | 10 GM |
| 801 | ZIRCONIUM | ZR | 7697-37-2 | | CORROSIVE | | | 10% HNO3/2% HF | CAB 23-3 | 2850 ML | 100 ML |
| 913 | ZIRCONIUM | ZR | | | CORROSIVE | | | 10% HNO3 | CAB 22-4 | 38500 ML | 1500 ML |
| 1050 | ZIRCONIUM | ZR | | | CORROSIVE | | | 10% HNO3 | CAB 27-1 | 18500 ML | 500 ML |
| 1051 | ZIRCONIUM | ZR | | | CORROSIVE | | | 10% HNO3 | CAB 27-4 | 18500 ML | 500 ML |
| 1059 | ZIRCONIUM | ZR | | | CORROSIVE | | | 10% HNO3 | CAB 37 ARCHIVE | 18500 ML | 500 ML |
| 1103 | ZIRCONIUM | ZR | | | CORROSIVE | | | 5% HF | CAB 27-4 | 18500 ML | 500 ML |
| 358 | ZIRCONIUM DINITRATE OXIDE | ZRO(NO3)2-H2O | 14985-18-3 | | OXIDIZER | | | | CAB 36 ARCHIVE | 18100 GM | 100 GM |
| 468 | ZIRCONIUM FLUORIDE | ZRF4 | 7783-64-4 | 3367 | CORROSIVE | | | | CAB 11-3 | 18250 GM | 250 GM |
| 1507 | ZIRCONIUM FLUORIDE | ZRF4 | 7783-64-4 | 3367 | CORROSIVE | | | | CAB 12-5 | 18250 GM | 250 GM |
| 746 | ZIRCONIUM METAL | ZR | 7440-67-7 | 1747 | FLAMMABLE | | | | CAB 7-4 | 1810 GM | 10 GM |
| 359 | ZIRCONIUM NITRATE | ZR(NO3)4 | 12372-57-5 | 3068 | CORROSIVE OXIDI | | | | CAB 6-2 | 58100 GM | 500 GM |
| 1410 | ZIRCONIUM NITRATE | ZR(NO3)4-5H2O | 13826-66-9 | 1604 | OXIDIZER | | | | CAB 34-5 | 48100 ML | 400 ML |
| 470 | ZIRCONIUM OXIDE | ZRO2 | 1314-23-4 | 2324 | | | | | CAB 11-3 | 181000 GM | 1000 GM |
| 991 | ZIRCONIUM OXIDE | ZRO2 | 1314-23-4 | 2324 | | | | | DESC 3 | 18100 GM | 100 GM |
| 467 | ZIRCONIUM OXYCHLORIDE | ZROCL2-4H2O | 15461-27-5 | 2994 | CORROSIVE | | | | CAB 11-3 | 18500 GM | 500 GM |
| 741 | ZIRCONIUM POWDER | ZR | 7440-67-7 | 1747 | FLAMMABLE | | | | CAB 7-3 | 28100 GM | 200 GM |
| 1508 | ZIRCONIUM SULFATE TETRAHYDRATE | ZR(SO4)2-4H2O | 14644-61-2 | 2154 | | | | | CAB 12-5 | 2825 GM | 50 GM |
| 984 | ZIRCONIUM TETRAFLUORIDE | ZRF4 | | | | | | | DESC 3 | 1850 GM | 50 GM |
| 360 | ZIRCONYL NITRATE | ZRO(NO3)2-4H2O | 13826-66-9 | 1604 | OXIDIZER | | | | CAB 36 ARCHIVE | 38125 GM /18100 GM /1850 GM | 400 GM |
| 469 | ZIRCONYL NITRATE | ZRO(NO3)2-4H2O | 13826-66-9 | 1604 | OXIDIZER | | | | CAB 11-3 | 18500 GM | 500 GM |
| 1012 | ZIRCONYL NITRATE | ZRNO3 | 13826-66-9 | 1604 | OXIDIZER | | | | DESC 5 | 1825 GM | 25 GM |

Table A-5. Maintenance Area Chemical Inventory. (sheet 1 of 3)

| Trade Name | Components |
|---|---|
| Aerokroil | None given |
| Aero-Duster | Compressed Gas |
| Aluminum Cutting Fluid | None given |
| Anchorlube | None given |
| Anti Static Spray | Isobutane |
| Anti-Seize Compound | Nichel |
| Anti-Static Spray | Hexane |
| Belt Dressing | Petroleum Distillate |
| Blue Layout Fluid | Toluol |
| Circuit Board Cleaner | Fluorinated Hydrocarbons, Isopropanol, Chlorinated Hydrocarbons |
| Contact Cement | Acetone, Tulane (SIC Toluene?), Petroleum |
| Cutting Oil | Distillate Sulphur-Lard |
| Dry Graphite Lubricant | Graphite |
| Electra Clean | Petroleum Solvents |
| Elect. Contact Cleaner | petroleum Distillates |
| Elect. Contact Cleaner | Perchloroethylene |
| Flux Remover | Azeotrope of Freon, Methylene Chloride |
| Freeze Mist | Chorofluorocarbons |
| Freon Solvent | Freon TF & 6% Methane |
| Gasket Adhesive | Petroleum, Acetone |
| Glass & Metal | None given |
| Head-Disk Cleaner | Freon, Isopropyl Alcohol |
| Head-Disk Cleaner | Anhydrous Isopropanol |

Table A-5. Maintenance Area Chemical Inventory. (sheet 2 of 3)

| Trade Name | Components |
|---|---|
| Indicating Liquid Blue | Synthetic Oils |
| Indicating Liquid Red | Acetylene Tetrabromide |
| Insulating Paint (red) | Aliphatic Hydrocarbon, Modified Rosin, Brown Ferric Oxide Silica, Silicates, Aromatic Hydrocarbon, Soya Alkyd Resin |
| IVI Spray Cleaner | Toluene, Xylene |
| Lint-Dust Remover | None given |
| Magnetic Head Cleaner | Trichlorotrifluoroethane |
| Metal Magic | None given |
| Oven Cleaner | Sodium Hydroxide |
| Penetrating Oil | Petroleum Distillates |
| Plastic Coating | Trichloromethane, Toluene, Methylene Chloride |
| Quick Freeze | Freon |
| Red Insulating Varnish | Xylene |
| Refrigerant 12 | Dichlorodifluoromethane |
| RTV | Silicone Rubber |
| Rust Remover | Phosphates |
| S^@^@ling Compound | Combustible Mixture |
| Slide Wire Cleaner | Fluorinated Hydrocarbons |
| Slip Plate | Graphite Base |
| Spotcheck | Ethyl Acetate, Surface Active Agent, Petroleum, Distillates |
| Spray Adhesive | Propellant, Cyclohexane, Hexane |
| Spray Paint | Methylisobutyl Ketone, Toluene |
| Stainless Steel Polish | None given |
| Tap Tool | None given |
| Tape Head Cleaner | Trichloroethylene |
| TMC Cleaner | None given |

Table A-5. Maintenance Area Chemical Inventory. (sheet 3 of 3)

| Trade Name | Components |
|---|---|
| Weld On, P-70 | Dimethylformamide, cyclohexanone, Methyl Ethyl Ketone, Tetrahydrofuran |
| Weld On, 3 | Chlorinated Solvents |
| Weld On, 771 | Dimethylformamide, Tetrahydrofuran |
| Caulk, Fire Barrier | Xylene, Methyl Ethyl Ketone |
| WD-40 | -- |

Table A-6. 222-S/222-SA Janitorial Supplies and Aerosols. (sheet 1 of 4)

| Product Name |
|---|
| A-Klean |
| Ajax Cleanser |
| Alconox Detergent |
| Ascarite II |
| Bon-Ami |
| Brasso |
| Brite Boy Metal Polish |
| Chlorox |
| D-CON Rat and Mouse Killer |
| Decker's Pink Creme |
| Desenex |
| Evans Anti Static Spray |
| Fantastic |
| Formula 409 |
| Glass Plus |
| GSI 112 |
| Invisible Glove |
| Jergens Aloe and Lanolin |
| Johnson's Baby Powder |
| Karmi Industries Emulsion Bosi Cleaner |
| Lava Soap |
| Monostat "Chromerge" |
| Mop Oil |
| OV-N-EZ Oven Cleaner |
| Palmolive Detergent |
| Parade Bleach |
| Petroleum Jelly |
| RMC Cleaner |
| Rustex Rust Remover |
| Sanikleen Heavy Duty Cleaner Disinfectant |
| Seven Rivers Industrial Strength Hand Creme |
| SOS Pads |
| Spic-n-Span |
| Spray-n-Wipe |
| Sweet Heart Dishwashing Liquid |
| Task Master Lemon Wax Furniture Polish |
| Krylon Silicon Lube |
| Tide |
| Triple C |
| Windex |
| Wood Plus |
| Wool Wax Creme |
| Wool Wax Creme |

Table A-6. 222-S/222-SA Janitorial Supplies and Aerosols. (sheet 2 of 4)

| Aerosols |
|---|
| Aero-Duster MS-220 |
| Ajax Window Cleaner |
| Americaine Topical Anesthetic Spray |
| 12% Benzoncaine & Freon |
| Blue Layout Fluid |
| Behold Cleaning Polish |
| Bravo - Power Foam |
| Buehler Metadi Aerosol Spray Diamond Compound |
| 3 C's Crystal Clear Cleaner Spray |
| Cardinal Industrial Finishes (Paint) |
| Carnauba Wax Furniture Polish |
| Chemscope Foaming Oven Cleaner |
| Cleaner for Plastic-Glass-Metal MS-260 |
| CRC Gasket Remover No. 05021 |
| Crown Tap Tool No. 9106 |
| Dry Graphite Lubricant No. 76210 |
| Dust Off |
| Easy Off Oven Cleaner |
| Electra Clean No. 02018 |
| Endust |
| Evergreen Room Deodorizer |
| First Class Lemon Furniture Polish |
| Flair Wood and Multipurpose Polish w/Lemon Oil |
| Flash Foaming Cleaner |
| Flo-Kem Kleen-It Cleaner |
| Foaming Glass and Mirror Cleaner |
| Four way Furniture Polish Creamy Wax Base w/Lemon Oil |
| Freeze Mist |
| Freon TF Solvent Cleaner |
| Freon Solvent MS-165 |
| Glo SS Stainless Steel Polish & Cleaner |
| Glycol Air Sanitizer Mint Fragrance |
| Good Sense Air Freshener |
| Graffiti Remover |
| Head and Disc Cleaner TX-109 |
| Insulating Paint 1201 Red Enamel |
| Isis Room Deodorant |
| Johnson's Starting Fluid Part No. 6752 |
| Johnson Shine Up |
| Kano Aerokroil |

Table A-6. 222-S/222-SA Janitorial Supplies and Aerosols. (sheet 3 of 4)

| Aerosols |
|---|
| Krylon Paints |
| Crystal Clear |
| Ignition Sealer |
| All Purpose Silicone Spray |
| Belt Dressing |
| Spray Primer |
| Bright Silver |
| Glossy White |
| Flat White |
| Antique White |
| Glossy Black |
| Charcoal Gray |
| Chrome Yellow |
| Baby Glue |
| Moss Green |
| Cherry Red |
| Mandarin Orange |
| Glowing Orange-Red |
| Greaseless Lubricant No. 00116 |
| Lysol Brand Spray Disinfectant |
| Mint No. 403 Air Freshener and Deodorant |
| Misco Clean Room Head and Disk Cleaner No. 1330 |
| Misty Bayberry Air Freshener |
| Misty Dualcide Insecticide |
| Misty Furniture Polish |
| Misty Glass and Mirror Cleaner |
| Misty Oven and Grill Cleaner |
| Omit Plus Lint and Dust Remover |
| OV-N-Ez Oven Cleaner No. 23 |
| Pam Vegetable Cooking Spray |
| Poly-Cleaner & Wax Spray Furniture Polish |
| Rad Con Surface Cleaner |
| Raid Flying Insect Killer Formula II |
| Red Insulating Varnish No. 6084 |
| Refrigerant 12 Dichlorodifluoromethane |
| Rust-Oleum Fast Dry Hard Industrial Coating No. 2185 |
| Scotch |
| Grip 871-NF Spray Adhesive |
| IVI Spray Sealer No. 1602 |
| Super 77 Spray Adhesive |
| Tape Primer |

Table A-6. 222-S/222-SA Janitorial Supplies and Aerosols. (sheet 4 of 4)

| Aerosols |
|---|
| Slip Plate Cleaner |
| Source Freon Solvent Cleaner No. 8095 |
| Spice No. 401 Air Freshener |
| SPI Duster |
| Magnaflux |
| Spot Check Penetrant SKL-HF/SKL-S |
| Spot Check Penetrant SKD-S |
| Spot Check Penetrant SKC-S |
| SPRA Solvo Penetrating Oil Sprayton TF Electric Contact & Tape Head Cleaner |
| NO.2002 |
| Spraytec Brand Anti-Static Spray No. 32N1079 |
| Static Guard No. 1-697-14-06 |
| Swish Aerosol Elektrokleen |
| Taskmaster Bayberry Air Freshener |
| Taskmaster Inset Killer |
| Terand Concentrated Furniture Polish w/Creamy Lemon Wax |
| Terand Inset Killer |
| IMC Cleaner No. 2009 |
| Triple Brand SSS Glass Cleaner |
| Triple Brand SSS Lemon Oil Furniture Polish |
| VWR Dist Cleaner Dichlorodifluoromethane |
| WD-40 West Pine Spray Cleaner |
| Windex Glass Cleaner |
| Wissh Electronic Contact Cleaner and Lubricant Model 36-037 |
| Zenith Circuit Board Cleaner No. 929-152 |
| Zenith Super Freeze No. 929-121 |
| ZEP Meter Mist Insect Killer |

This page intentionally left blank.

9 1 1 1 1 9 5 1 7 7 0

# APPENDIX B

# SAMPLE DATA

9111392513796

This page intentionally left blank.

Table B-1. Chemical Raw Data.
(sheet 1 of 8)

| Constituent | Sample # | Date | Method | Result |
|---|---|---|---|---|
| Arsenic (EP Toxic) | 50804E | 11/28/89 | ICP | <5.00E+02 |
| Arsenic (EP Toxic) | 50661E | 10/09/89 | ICP | <5.00E+02 |
| Arsenic (EP Toxic) | 50673E | 10/11/89 | ICP | <5.00E+02 |
| Arsenic (EP Toxic) | 51079E | 3/21/90 | ICP | <5.00E+02 |
| Barium | 50804 | 11/28/89 | ICP | 2.50E+01 |
| Barium | 50661 | 10/09/89 | ICP | 3.30E+01 |
| Barium | 50673 | 10/11/89 | ICP | 3.00E+01 |
| Barium | 51079 | 3/21/90 | ICP | 2.50E+01 |
| Barium (EP Toxic) | 50804E | 11/28/89 | ICP | <1.00E+03 |
| Barium (EP Toxic) | 50661E | 10/09/89 | ICP | <1.00E+03 |
| Barium (EP Toxic) | 50673E | 10/11/89 | ICP | <1.00E+03 |
| Barium (EP Toxic) | 51079E | 3/21/90 | ICP | <1.00E+03 |
| Boron | 50804 | 11/28/89 | ICP | <1.00E+01 |
| Boron | 50661 | 10/09/89 | ICP | 1.70E+01 |
| Boron | 50673 | 10/11/89 | ICP | 1.60E+01 |
| Boron | 51079 | 3/21/90 | ICP | 2.30E+01 |
| Cadmium (EP Toxic) | 50804E | 11/28/89 | ICP | <1.00E+02 |
| Cadmium (EP Toxic) | 50661E | 10/09/89 | ICP | <1.00E+02 |
| Cadmium (EP Toxic) | 50673E | 10/11/89 | ICP | <1.00E+02 |
| Cadmium (EP Toxic) | 51079E | 3/21/90 | ICP | <1.00E+02 |
| Calcium | 50804 | 11/28/89 | ICP | 1.55E+04 |
| Calcium | 50661 | 10/09/89 | ICP | 1.90E+04 |
| Calcium | 50673 | 10/11/89 | ICP | 1.76E+04 |
| Calcium | 51079 | 3/21/90 | ICP | 1.57E+04 |
| Chloride | 50804 | 11/28/89 | IC | 2.30E+03 |
| Chloride | 50661 | 10/09/89 | IC | 5.20E+03 |
| Chloride | 50673 | 10/11/89 | IC | 5.10E+03 |
| Chloride | 51079 | 3/21/90 | IC | 2.20E+03 |
| Chromium (EP Toxic) | 50804E | 11/28/89 | ICP | <5.00E+02 |
| Chromium (EP Toxic) | 50661E | 10/09/89 | ICP | <5.00E+02 |
| Chromium (EP Toxic) | 50673E | 10/11/89 | ICP | <5.00E+02 |
| Chromium (EP Toxic) | 51079E | 3/21/90 | ICP | <5.00E+02 |
| Copper | 50804 | 11/28/89 | ICP | 2.47E+02 |
| Copper | 50661 | 10/09/89 | ICP | 9.20E+01 |
| Copper | 50673 | 10/11/89 | ICP | 1.05E+02 |
| Copper | 51079 | 3/21/90 | ICP | 1.65E+02 |
| Fluoride | 50804 | 11/28/89 | IC | <5.00E+02 |
| Fluoride | 50804 | 11/28/89 | ISE | 1.19E+02 |
| Fluoride | 50661 | 10/09/89 | IC | <5.00E+02 |
| Fluoride | 50661 | 10/09/89 | ISE | 1.42E+02 |
| Fluoride | 50673 | 10/11/89 | IC | <5.00E+02 |
| Fluoride | 50673 | 10/11/89 | ISE | 1.35E+02 |
| Fluoride | 51079 | 3/21/90 | IC | <5.00E+02 |
| Fluoride | 51079 | 3/21/90 | ISE | 1.04E+02 |
| Iron | 50804 | 11/28/89 | ICP | 4.50E+01 |
| Iron | 50661 | 10/09/89 | ICP | 1.10E+02 |

Table B-1. Chemical Raw Data. (sheet 2 of 32)
13.7. Data for 222-S Laboratory Wastewater.
(sheet 2 of 8)

| Constituent | Sample # | Date | Method | Result |
|---|---|---|---|---|
| Iron | 50673 | 10/11/89 | ICP | 2.25E+02 |
| Iron | 51079 | 3/21/90 | ICP | 1.25E+02 |
| Lead (EP Toxic) | 50804E | 11/28/89 | ICP | <5.00E+02 |
| Lead (EP Toxic) | 50661E | 10/09/89 | ICP | <5.00E+02 |
| Lead (EP Toxic) | 50673E | 10/11/89 | ICP | <5.00E+02 |
| Lead (EP Toxic) | 51079E | 3/21/90 | ICP | <5.00E+02 |
| Magnesium | 50804 | 11/28/89 | ICP | 3.53E+03 |
| Magnesium | 50661 | 10/09/89 | ICP | 4.35E+03 |
| Magnesium | 50673 | 10/11/89 | ICP | 4.07E+03 |
| Magnesium | 51079 | 3/21/90 | ICP | 3.83E+03 |
| Manganese | 50804 | 11/28/89 | ICP | <5.00E+00 |
| Manganese | 50661 | 10/09/89 | ICP | 1.00E+01 |
| Manganese | 50673 | 10/11/89 | ICP | 9.00E+00 |
| Manganese | 51079 | 3/21/90 | ICP | <5.00E+00 |
| Mercury (EP Toxic) | 50804E | 11/28/89 | CVAA/M | <2.00E+01 |
| Mercury (EP Toxic) | 50661E | 10/09/89 | CVAA/M | <2.00E+01 |
| Mercury (EP Toxic) | 50673E | 10/11/89 | CVAA/M | <2.00E+01 |
| Mercury (EP Toxic) | 51079E | 3/21/90 | CVAA/M | <2.00E+01 |
| Nitrate | 50804 | 11/28/89 | IC | <5.00E+02 |
| Nitrate | 50661 | 10/09/89 | IC | <5.00E+02 |
| Nitrate | 50673 | 10/11/89 | IC | <5.00E+02 |
| Nitrate | 51079 | 3/21/90 | IC | 8.00E+02 |
| Potassium | 50804 | 11/28/89 | ICP | 6.93E+02 |
| Potassium | 50661 | 10/09/89 | ICP | 8.56E+02 |
| Potassium | 50673 | 10/11/89 | ICP | 8.43E+02 |
| Potassium | 51079 | 3/21/90 | ICP | 6.64E+02 |
| Selenium (EP Toxic) | 50804E | 11/28/89 | ICP | <5.00E+02 |
| Selenium (EP Toxic) | 50661E | 10/09/89 | ICP | <5.00E+02 |
| Selenium (EP Toxic) | 50673E | 10/11/89 | ICP | <5.00E+02 |
| Selenium (EP Toxic) | 51079E | 3/21/90 | ICP | <5.00E+02 |
| Silicon | 50804 | 11/28/89 | ICP | 1.94E+03 |
| Silicon | 50661 | 10/09/89 | ICP | 2.05E+03 |
| Silicon | 50673 | 10/11/89 | ICP | 2.06E+03 |
| Silicon | 51079 | 3/21/90 | ICP | 1.74E+03 |
| Silver (EP Toxic) | 50804E | 11/28/89 | ICP | <5.00E+02 |
| Silver (EP Toxic) | 50661E | 10/09/89 | ICP | <5.00E+02 |
| Silver (EP Toxic) | 50673E | 10/11/89 | ICP | <5.00E+02 |
| Silver (EP Toxic) | 51079E | 3/21/90 | ICP | <5.00E+02 |
| Sodium | 50804 | 11/28/89 | ICP | 1.82E+03 |
| Sodium | 50661 | 10/09/89 | ICP | 2.55E+03 |
| Sodium | 50673 | 10/11/89 | ICP | 2.32E+03 |
| Sodium | 51079 | 3/21/90 | ICP | 1.83E+03 |
| Strontium | 50804 | 11/28/89 | ICP | 7.80E+01 |
| Strontium | 50661 | 10/09/89 | ICP | 1.07E+02 |
| Strontium | 50673 | 10/11/89 | ICP | 9.80E+01 |

Table B-1. Chemical Raw Data.
(sheet 3 of 8)

| Constituent | Sample # | Date | Method | Result |
|---|---|---|---|---|
| Strontium | 51079 | 3/21/90 | ICP | 8.30E+01 |
| Sulfate | 50804 | 11/28/89 | IC | 1.06E+04 |
| Sulfate | 50661 | 10/09/89 | IC | 1.48E+04 |
| Sulfate | 50673 | 10/11/89 | IC | 1.49E+04 |
| Sulfate | 51079 | 3/21/90 | IC | 1.20E+04 |
| Uranium | 50804 | 11/28/89 | FLUOR | 3.46E-01 |
| Uranium | 50661 | 10/09/89 | FLUOR | 9.58E-01 |
| Uranium | 50673 | 10/11/89 | FLUOR | 4.81E-01 |
| Uranium | 51079 | 3/21/90 | FLUOR | 3.11E-01 |
| Vanadium | 50804 | 11/28/89 | ICP | <5.00E+00 |
| Vanadium | 50661 | 10/09/89 | ICP | 7.00E+00 |
| Vanadium | 50673 | 10/11/89 | ICP | <5.00E+00 |
| Vanadium | 51079 | 3/21/90 | ICP | <5.00E+00 |
| Zinc | 50804 | 11/28/89 | ICP | <5.00E+00 |
| Zinc | 50661 | 10/09/89 | ICP | 1.80E+01 |
| Zinc | 50673 | 10/11/89 | ICP | 2.30E+01 |
| Zinc | 51079 | 3/21/90 | ICP | 1.50E+01 |
| Acetone | 50804 | 11/28/89 | VOA | 1.40E+01 |
| Acetone | 50804 | 11/28/89 | ABN | <1.00E+01 |
| Acetone | 50804B | 11/28/89 | VOA | <1.00E+01 |
| Acetone | 50804T | 11/28/89 | VOA | <1.00E+01 |
| Acetone | 50661 | 10/09/89 | VOA | <1.00E+01 |
| Acetone | 50661 | 10/09/89 | ABN | <1.00E+01 |
| Acetone | 50661B | 10/09/89 | VOA | <1.00E+01 |
| Acetone | 50661T | 10/09/89 | VOA | <1.00E+01 |
| Acetone | 50673 | 10/11/89 | VOA | <1.00E+01 |
| Acetone | 50673 | 10/11/89 | ABN | <1.00E+01 |
| Acetone | 50673B | 10/11/89 | VOA | <8.00E+00 |
| Acetone | 50673T | 10/11/89 | VOA | <1.00E+01 |
| Acetone | 51079 | 3/21/90 | VOA | <7.00E+00 |
| Acetone | 51079 | 3/21/90 | ABN | <1.00E+01 |
| Acetone | 51079B | 3/21/90 | VOA | <1.00E+01 |
| Acetone | 51079T | 3/21/90 | VOA | <1.00E+01 |
| Ammonia | 50804 | 11/28/89 | ISE | <5.00E+01 |
| Ammonia | 50661 | 10/09/89 | ISE | 9.10E+01 |
| Ammonia | 50673 | 10/11/89 | ISE | 7.80E+01 |
| Ammonia | 51079 | 3/21/90 | ISE | <5.00E+01 |
| Dichloromethane | 50804 | 11/28/89 | VOA | <5.00E+00 |
| Dichloromethane | 50804B | 11/28/89 | VOA | 7.00E+00 |
| Dichloromethane | 50804T | 11/28/89 | VOA | 6.00E+00 |
| Dichloromethane | 50661 | 10/09/89 | VOA | <5.00E+00 |
| Dichloromethane | 50661B | 10/09/89 | VOA | 6.00E+02 |
| Dichloromethane | 50661T | 10/09/89 | VOA | 6.30E+02 |
| Dichloromethane | 50673 | 10/11/89 | VOA | <5.00E+00 |
| Dichloromethane | 50673B | 10/11/89 | VOA | 4.70E+02 |
| Dichloromethane | 50673T | 10/11/89 | VOA | 4.90E+02 |

Table B-1. Chemical Raw Data.
(sheet 4 of 8)

| Constituent | Sample # | Date | Method | Result |
|---|---|---|---|---|
| Dichloromethane | 51079 | 3/21/90 | VOA | <5.00E+00 |
| Dichloromethane | 51079B | 3/21/90 | VOA | <5.00E+00 |
| Dichloromethane | 51079T | 3/21/90 | VOA | <5.00E+00 |
| Tetrahydrofuran | 50804 | 11/28/89 | VOA | <1.00E+01 |
| Tetrahydrofuran | 50804B | 11/28/89 | VOA | <6.00E+00 |
| Tetrahydrofuran | 50804T | 11/28/89 | VOA | <5.00E+00 |
| Tetrahydrofuran | 50661 | 10/09/89 | VOA | <1.00E+01 |
| Tetrahydrofuran | 50661B | 10/09/89 | VOA | <1.00E+01 |
| Tetrahydrofuran | 50661T | 10/09/89 | VOA | <1.00E+01 |
| Tetrahydrofuran | 50673 | 10/11/89 | VOA | <1.00E+01 |
| Tetrahydrofuran | 50673B | 10/11/89 | VOA | <1.00E+01 |
| Tetrahydrofuran | 50673T | 10/11/89 | VOA | <1.00E+01 |
| Tetrahydrofuran | 51079 | 3/21/90 | VOA | <1.00E+01 |
| Tetrahydrofuran | 51079B | 3/21/90 | VOA | 1.00E+01 |
| Tetrahydrofuran | 51079T | 3/21/90 | VOA | 1.00E+01 |
| Trichloromethane | 50804 | 11/28/89 | VOA | 2.10E+01 |
| Trichloromethane | 50804B | 11/28/89 | VOA | 1.00E+01 |
| Trichloromethane | 50804T | 11/28/89 | VOA | 9.00E+00 |
| Trichloromethane | 50661 | 10/09/89 | VOA | 2.50E+01 |
| Trichloromethane | 50661B | 10/09/89 | VOA | <5.00E+00 |
| Trichloromethane | 50661T | 10/09/89 | VOA | <5.00E+00 |
| Trichloromethane | 50673 | 10/11/89 | VOA | 2.00E+01 |
| Trichloromethane | 50673B | 10/11/89 | VOA | <5.00E+00 |
| Trichloromethane | 50673T | 10/11/89 | VOA | <5.00E+00 |
| Trichloromethane | 51079 | 3/21/90 | VOA | 1.30E+01 |
| Trichloromethane | 51079B | 3/21/90 | VOA | <4.00E+00 |
| Trichloromethane | 51079T | 3/21/90 | VOA | <4.00E+00 |
| Unknown amide | 50804 | 11/28/89 | ABN | 2.60E+01 |
| Alkalinity (Method B) | 50804 | 11/28/89 | TITRA | 4.40E+04 |
| Alkalinity (Method B) | 50661 | 10/09/89 | TITRA | 4.70E+04 |
| Alkalinity (Method B) | 50673 | 10/11/89 | TITRA | 5.30E+04 |
| Alkalinity (Method B) | 51079 | 3/21/90 | TITRA | 4.60E+04 |
| Alpha Activity (pCi/L) | 50804 | 11/28/89 | Alpha | 7.78E-01 |
| Alpha Activity (pCi/L) | 50661 | 10/09/89 | Alpha | 5.88E+00 |
| Alpha Activity (pCi/L) | 50673 | 10/11/89 | Alpha | 1.06E+00 |
| Alpha Activity (pCi/L) | 51079 | 3/21/90 | Alpha | <2.89E-01 |
| Beta Activity (pCi/L) | 50804 | 11/28/89 | Beta | <1.04E+00 |
| Beta Activity (pCi/L) | 50661 | 10/09/89 | Beta | 5.00E+00 |
| Beta Activity (pCi/L) | 50673 | 10/11/89 | Beta | <4.72E-01 |
| Beta Activity (pCi/L) | 51079 | 3/21/90 | Beta | 3.88E+00 |
| Conductivity (μS) | 50804 | 11/28/89 | COND-F1 | 1.33E+02 |
| Conductivity (μS) | 50661 | 10/09/89 | COND-F1 | 5.46E+02 |
| Conductivity (μS) | 50673 | 10/11/89 | COND-F1 | 1.37E+02 |
| Conductivity (μS) | 51079 | 3/21/90 | COND-F1 | 1.37E+02 |
| Ignitability (°F) | 50804E | 11/28/89 | IGNIT | 2.12E+02 |
| Ingitability (°F) | 50661E | 10/09/89 | IGNIT | 2.10E+02 |

Table B-1. Chemical Raw Data.
(sheet 5 of 8)

| Constituent | Sample # | Date | Method | Result |
|---|---|---|---|---|
| Ingitability (°F) | 50673E | 10/11/89 | IGNIT | 2.10E+02 |
| Ingitability (°F) | 51079E | 3/21/90 | IGNIT | 2.06E+02 |
| pH (dimensionless) | 50804 | 11/28/89 | PH-Fld | 7.19E+00 |
| pH (dimensionless) | 50661 | 10/09/89 | PH-Fld | 6.73E+00 |
| pH (dimensionless) | 50673 | 10/11/89 | PH-Fld | 6.60E+00 |
| pH (dimensionless) | 51079 | 3/21/90 | PH-Fld | 7.34E+00 |
| Reactivity Cyanide (mg/kg) | 50804E | 11/28/89 | DSPEC | <1.00E+02 |
| Reactivity Cyanide (mg/kg) | 50661E | 10/09/89 | DSPEC | <1.00E+02 |
| Reactivity Cyanide (mg/kg) | 50673E | 10/11/89 | DSPEC | <1.00E+02 |
| Reactivity Cyanide (mg/kg) | 51079E | 3/21/90 | DSPEC | <1.00E+02 |
| Reactivity Sulfide (mg/kg) | 50804E | 11/28/89 | DTITRA | <1.00E+02 |
| Reactivity Sulfide (mg/kg) | 50661E | 10/09/89 | DTITRA | <1.00E+02 |
| Reactivity Sulfide (mg/kg) | 50673E | 10/11/89 | DTITRA | <1.00E+02 |
| Reactivity Sulfide (mg/kg) | 51079E | 3/21/90 | DTITRA | <1.00E+02 |
| Suspended Solids | 50804 | 11/28/89 | SSOLID | <5.00E+03 |
| Suspended Solids | 50661 | 10/09/89 | SSOLID | <5.00E+03 |
| Suspended Solids | 50673 | 10/11/89 | SSOLID | 2.20E+04 |
| Suspended Solids | 51079 | 3/21/90 | SSOLID | <5.00E+03 |
| TDS | 50804 | 11/28/89 | TDS | 5.90E+04 |
| TDS | 50661 | 10/09/89 | TDS | 7.80E+04 |
| TDS | 50673 | 10/11/89 | TDS | 6.20E+04 |
| TDS | 51079 | 3/21/90 | TDS | 3.40E+04 |
| Temperature (°C) | 50804 | 11/28/89 | TEMP-Fld | 1.50E+01 |
| Temperature (°C) | 50661 | 10/09/89 | TEMP-Fld | 2.13E+01 |
| Temperature (°C) | 50673 | 10/11/89 | TEMP-Fld | 2.26E+01 |
| Temperature (°C) | 51079 | 3/21/90 | TEMP-Fld | 1.73E+01 |
| TOC | 50804 | 11/28/89 | TOC | <1.00E+03 |
| TOC | 50661 | 10/09/89 | TOC | <1.30E+03 |
| TOC | 50673 | 10/11/89 | TOC | <1.90E+03 |
| TOC | 51079 | 3/21/90 | TOC | 1.10E+03 |
| Total Carbon | 50804 | 11/28/89 | TC | 1.19E+04 |
| Total Carbon | 50661 | 10/09/89 | TC | 1.30E+04 |
| Total Carbon | 50673 | 10/11/89 | TC | 1.20E+04 |
| Total Carbon | 51079 | 3/21/90 | TC | 1.30E+04 |
| TOX (as Cl) | 50804 | 11/28/89 | LTOX | 1.11E+02 |
| TOX (as Cl) | 50661 | 10/09/89 | LTOX | 1.27E+02 |
| TOX (as Cl) | 50673 | 10/11/89 | LTOX | 1.33E+02 |
| TOX (as Cl) | 51079 | 3/21/90 | LTOX | 8.40E+01 |
| $^{241}$Am (pCi/L) | 50804 | 11/28/89 | AEA | 3.96E-02 |
| $^{241}$Am (pCi/L) | 50661 | 10/09/89 | AEA | 2.95E+00 |
| $^{241}$Am (pCi/L) | 50673 | 10/11/89 | AEA | 7.96E-02 |
| $^{241}$Am (pCi/L) | 51079 | 3/21/90 | AEA | 7.44E-02 |
| $^{14}$C (pCi/L) | 50804 | 11/28/89 | LSC | 5.59E+00 |
| $^{14}$C (pCi/L) | 50661 | 10/09/89 | LSC | <1.49E+00 |
| $^{14}$C (pCi/L) | 50673 | 10/11/89 | LSC | <1.80E+00 |
| $^{14}$C (pCi/L) | 51079 | 3/21/90 | LSC | <1.55E+00 |

Table B-1. Chemical Raw Data.
(sheet 6 of 8)

| Constituent | Sample # | Date | Method | Result |
|---|---|---|---|---|
| $^{3}H$ (pCi/L) | 50661 | 10/09/89 | LSC | 2.90E+02 |
| $^{3}H$ (pCi/L) | 50673 | 10/11/89 | LSC | <9.74E+01 |
| $^{3}H$ (pCi/L) | 51079 | 3/21/90 | LSC | <1.37E+02 |
| $^{238}Pu$ (pCi/L) | 50804 | 11/28/89 | AEA | 4.17E-03 |
| $^{238}Pu$ (pCi/L) | 50661 | 10/09/89 | AEA | 4.31E-02 |
| $^{238}Pu$ (pCi/L) | 50673 | 10/11/89 | AEA | 1.53E-02 |
| $^{238}Pu$ (pCi/L) | 51079 | 3/21/90 | AEA | <1.75E-03 |
| $^{239,240}Pu$ (pCi/L) | 50804 | 11/28/89 | AEA | 2.79E-02 |
| $^{239,240}Pu$ (pCi/L) | 50661 | 10/09/89 | AEA | 7.42E-01 |
| $^{239,240}Pu$ (pCi/L) | 50673 | 10/11/89 | AEA | 7.70E-02 |
| $^{239,240}Pu$ (pCi/L) | 51079 | 3/21/90 | AEA | 3.78E-02 |
| Radium Total (pCi/L) | 50804 | 11/28/89 | Alpha-Ra | 1.74E-01 |
| Radium Total (pCi/L) | 50661 | 10/09/89 | Alpha-Ra | <1.05E-01 |
| Radium Total (pCi/L) | 51079 | 3/21/90 | Alpha-Ra | <4.54E-03 |
| $^{90}Sr$ (pCi/L) | 50804 | 11/28/89 | Beta | <9.50E-02 |
| $^{90}Sr$ (pCi/L) | 50661 | 10/09/89 | Beta | 2.93E-01 |
| $^{90}Sr$ (pCi/L) | 50673 | 10/11/89 | Beta | <7.30E-03 |
| $^{90}Sr$ (pCi/L) | 51079 | 3/21/90 | Beta | <9.93E-02 |
| $^{234}U$ (pCi/L) | 50804 | 11/28/89 | AEA | 1.14E-01 |
| $^{234}U$ (pCi/L) | 50661 | 10/09/89 | AEA | 9.08E-02 |
| $^{234}U$ (pCi/L) | 50673 | 10/11/89 | AEA | 6.20E-02 |
| $^{234}U$ (pCi/L) | 51079 | 3/21/90 | AEA | 1.55E-01 |
| $^{238}U$ (pCi/L) | 50804 | 11/28/89 | AEA | 8.90E-02 |
| $^{238}U$ (pCi/L) | 50661 | 10/09/89 | AEA | 1.28E-01 |
| $^{238}U$ (pCi/L) | 50673 | 10/11/89 | AEA | 5.97E-02 |
| $^{238}U$ (pCi/L) | 51079 | 3/21/90 | AEA | 1.30E-01 |

NOTES:

Sample# is the number of the sample. See chapter three for corresponding chain-of-custody number.

Date is the sampling date.

Results are in ppb (parts per billion) unless otherwise indicated.

The following table lists the methods that are coded in the method column.

| Code | Analytical Method | Reference |
|---|---|---|
| ABN | Semivolatile Organics (GC/MS) | USEPA-8270 |
| AEA | $^{241}Am$ | UST-20Am01 |
| AEA | Curium Isotopes | UST-20Am/Cm01 |
| AEA | Plutonium Isotopes | UST-20Pu01 |
| AEA | Uranium Isotopes | UST-20U01 |
| ALPHA | Alpha Counting | EPA-680/4-75/1 |
| ALPHA-Ra | Total Radium Alpha Counting | ASTM-D2460 |
| BETA | Beta Counting | EPA-680/4-75/1 |

Table B-1. Chemical Raw Data.
(sheet 7 of 8)

| Code | Analytical Method | Reference |
|---|---|---|
| BETA | $^{90}Sr$ | UST-20Sr02 |
| COLIF | Coliform Bacteria | USEPA-9131 |
| COLIFMF | Coliform Bacteria (Membrane Filter) | USEPA-9132 |
| COND-Fld | Conductivity-Field | ASTM-D1125A |
| COND-Lab | Conductivity-Laboratory | ASTM-D1125A |
| CVAA | Mercury | USEPA-7470 |
| CVAA/M | Mercury-Mixed Matrix | USEPA-7470 |
| DIGC | Direct Aqueous Injection (GC) | UST-70DIGC |
| DIMS | Direct Aqueous Injection (GC/MS) | "USEPA-8240" |
| DSPEC | Reactive Cyanide (Distillation, Spectroscopy) | USEPA-CHAPTER 7 |
| DTITRA | Reactive Sulfide (Distillation, Titration) | USEPA-CHAPTER 7 |
| FLUOR | Uranium (Fluorometry) | ASTM-D2907-83 |
| GEA | Gamma Energy Analysis Spectroscopy | ASTM-D3649-85 |
| GFAA | Arsenic (AA, Furnace Technique) | USEPA-7060 |
| GFAA | Lead (AA, Furnace Technique) | USEPA-7421 |
| GFAA | Selenium (AA, Furnace Technique) | USEPA-7740 |
| GFAA | Thallium (AA, Furnace Technique) | USEPA-7841 |
| IC | Ion Chromatography | EPA-600/4-84-01 |
| ICP | Atomic Emission Spectroscopy (ICP) | USEPA-6010 |
| ICP/M | Atomic Emission Spectroscopy (ICP)-Mixed Matrix | USEPA-6010 |
| IGNIT | Pensky-Martens Closed-Cup Ignitability | USEPA-1010 |
| ISE | Fluoride-Low Detection Limit | ASTM-D1179-80-B |
| ISE | Ammonium Ion | ASTM-D1426-D |
| LALPHA | Alpha Activity-Low Detection Limit | EPA-680/4-75/1 |
| LEPD | $^{129}I$ | UST-20I02 |
| LSC | $^{14}C$ | UST-20C01 |
| LSC | Tritium | UST-20H03 |
| LTOX | Total Organic Halides-Low Detection Limit | USEPA-9020 |
| PH-Fld | pH-Field | USEPA-9040 |
| PH-Lab | pH-Laboratory | USEPA-9040 |
| SPEC | Total and Amenable Cyanide (Spectroscopy) | USEPA-9010 |
| SPEC | Hydrazine-Low Detection Limit (Spectroscopy) | ASTM-D1385 |
| SSOLID | Suspended Solids | SM-208D |
| TC | Total Carbon | USEPA-9060 |
| TDS | Total Dissolved Solids | SM-208B |
| TEMP-Fld | Temperature-Field | Local |
| TITRA | Alkalinity-Method B (Titration) | ASTM-D1067B |
| TITRA | Sulfides (Titration) | USEPA-9030 |

Table B-1. Chemical Raw Data. (sheet 8 of 32)
(sheet 8 of 8)

| Code | Analytical Method | Reference |
|---|---|---|
| TOC | Total Organic Carbon | USEPA-9060 |
| TOX | Total Organic Halides | USEPA-9020 |
| VOA | Volatile Organics (GC/MS) | USEPA-8240 |

Analytical Method Acronyms:
- atomic absorption spectroscopy (AA)
- gas chromatography (GC)
- mass spectrometry (MS)
- inductively-coupled plasma spectroscopy (ICP)

References:

ASTM - "1986 Annual Book of ASTM Standards", American Society for Testing and Materials, Philadelphia, Pennsylvania.

EPA - Various methods of the U.S. Environmental Protection Agency, Washington, D.C.

UST - Methods of the United States Testing Company, Incorporated, Richland, Washington.

SM - "Standard Methods for the Examination of Water and Wastewater", 16th ed., American Public Health Association, American Water Works Association and Water Pollution Control Federation, Washington, D.C.

USEPA- "Test Methods for Evaluating Solid Waste Physical/Chemical Methods", 3rd ed., SW-846, U.S. Environmental Protection Agency, Washington, D.C.

Table B-2. Total Data.
(sheet 1 of 49)

| Constituent | Sample # | Date | Method | Result |
|---|---|---|---|---|
| Aluminum | 50053 | 5/31/86 | ICP | 1.62E+02 |
| Aluminum | 50113 | 8/18/86 | ICP | 2.44E+02 |
| Aluminum | 50149 | 10/03/86 | ICP | <1.50E+02 |
| Aluminum | 50214 | 1/06/87 | ICP | <1.50E+02 |
| Aluminum | 50454 | 9/16/88 | ICP | <1.50E+02 |
| Aluminum | 50460 | 9/23/88 | ICP | <1.50E+02 |
| Aluminum | 50470 | 10/10/88 | ICP | <1.50E+02 |
| Aluminum | 50478 | 10/24/88 | ICP | <1.50E+02 |
| Aluminum | 50490 | 11/04/88 | ICP | <1.50E+02 |
| Aluminum | 50502 | 12/02/88 | ICP | <1.50E+02 |
| Aluminum | 50512 | 12/16/88 | ICP | <1.50E+02 |
| Aluminum | 50514 | 12/16/88 | ICP | <1.50E+02 |
| Aluminum | 50534 | 2/15/89 | ICP | <1.50E+02 |
| Aluminum | 50542 | 3/02/89 | ICP | <1.50E+02 |
| Aluminum | 50558 | 3/15/89 | ICP | <1.50E+02 |
| Aluminum | 50572 | 3/29/89 | ICP | <1.50E+02 |
| Aluminum | 50596 | 4/12/89 | ICP | <1.50E+02 |
| Aluminum | 50804 | 11/28/89 | ICP | <1.50E+02 |
| Aluminum | 50014 | 9/11/85 | ICP | 3.08E+02 |
| Aluminum | 50456 | 9/16/88 | ICP | <1.50E+02 |
| Aluminum | 50462 | 9/23/88 | ICP | <1.50E+02 |
| Aluminum | 50468 | 10/10/88 | ICP | <1.50E+02 |
| Aluminum | 50476 | 10/24/88 | ICP | <1.50E+02 |
| Aluminum | 50488 | 11/04/88 | ICP | <1.50E+02 |
| Aluminum | 50498 | 11/18/88 | ICP | <1.50E+02 |
| Aluminum | 50500 | 12/02/88 | ICP | <1.50E+02 |
| Aluminum | 50532 | 2/15/89 | ICP | <1.50E+02 |
| Aluminum | 50544 | 3/02/89 | ICP | <1.50E+02 |
| Aluminum | 50556 | 3/15/89 | ICP | <1.50E+02 |
| Aluminum | 50570 | 3/29/89 | ICP | <1.50E+02 |
| Aluminum | 50593 | 4/11/89 | ICP | <1.50E+02 |
| Aluminum | 50661 | 10/09/89 | ICP | <1.50E+02 |
| Aluminum | 50673 | 10/11/89 | ICP | <1.50E+02 |
| Aluminum | 50071 | 6/19/86 | ICP | 2.43E+02 |
| Aluminum | 50085 | 7/07/86 | ICP | 5.84E+03 |
| Aluminum | 51079 | 3/21/90 | ICP | <1.50E+02 |
| Arsenic (EP Toxic) | 50558E | 3/15/89 | ICP | <5.00E+01 |
| Arsenic (EP Toxic) | 50572E | 3/29/89 | ICP | <5.00E+01 |
| Arsenic (EP Toxic) | 50596E | 4/12/89 | ICP | <5.00E+01 |
| Arsenic (EP Toxic) | 50804E | 11/28/89 | ICP | <5.00E+02 |
| Arsenic (EP Toxic) | 50556E | 3/15/89 | ICP | <5.00E+01 |
| Arsenic (EP Toxic) | 50570E | 3/29/89 | ICP | <5.00E+01 |
| Arsenic (EP Toxic) | 50593E | 4/11/89 | ICP | <5.00E+01 |
| Arsenic (EP Toxic) | 50661E | 10/09/89 | ICP | <5.00E+02 |
| Arsenic (EP Toxic) | 50673E | 10/11/89 | ICP | <5.00E+02 |
| Arsenic (EP Toxic) | 51079E | 3/21/90 | ICP | <5.00E+02 |

Table B-2. Total Data.
(sheet 2 of 49)

| Constituent | Sample # | Date | Method | Result |
|---|---|---|---|---|
| Barium | 50053 | 5/31/86 | ICP | 3.10E+01 |
| Barium | 50113 | 8/18/86 | ICP | 3.30E+01 |
| Barium | 50149 | 10/03/86 | ICP | 2.20E+01 |
| Barium | 50214 | 1/06/87 | ICP | 2.40E+01 |
| Barium | 50454 | 9/16/88 | ICP | 2.80E+01 |
| Barium | 50460 | 9/23/88 | ICP | 2.60E+01 |
| Barium | 50470 | 10/10/88 | ICP | 2.90E+01 |
| Barium | 50478 | 10/24/88 | ICP | 2.50E+01 |
| Barium | 50490 | 11/04/88 | ICP | 2.20E+01 |
| Barium | 50502 | 12/02/88 | ICP | 1.60E+01 |
| Barium | 50512 | 12/16/88 | ICP | 2.00E+01 |
| Barium | 50514 | 12/16/88 | ICP | 1.90E+01 |
| Barium | 50534 | 2/15/89 | ICP | 1.90E+01 |
| Barium | 50542 | 3/02/89 | ICP | 2.00E+01 |
| Barium | 50558 | 3/15/89 | ICP | 2.50E+01 |
| Barium | 50572 | 3/29/89 | ICP | 2.40E+01 |
| Barium | 50596 | 4/12/89 | ICP | 2.40E+01 |
| Barium | 50804 | 11/28/89 | ICP | 2.50E+01 |
| Barium | 50014 | 9/11/85 | ICP | 3.20E+01 |
| Barium | 50456 | 9/16/88 | ICP | 2.70E+01 |
| Barium | 50462 | 9/23/88 | ICP | 3.00E+01 |
| Barium | 50468 | 10/10/88 | ICP | 2.50E+01 |
| Barium | 50476 | 10/24/88 | ICP | 2.40E+01 |
| Barium | 50488 | 11/04/88 | ICP | 2.10E+01 |
| Barium | 50498 | 11/18/88 | ICP | 1.90E+01 |
| Barium | 50500 | 12/02/88 | ICP | 1.90E+01 |
| Barium | 50532 | 2/15/89 | ICP | 1.70E+01 |
| Barium | 50544 | 3/02/89 | ICP | 2.20E+01 |
| Barium | 50556 | 3/15/89 | ICP | 2.20E+01 |
| Barium | 50570 | 3/29/89 | ICP | 2.50E+01 |
| Barium | 50593 | 4/11/89 | ICP | 2.40E+01 |
| Barium | 50661 | 10/09/89 | ICP | 3.30E+01 |
| Barium | 50673 | 10/11/89 | ICP | 3.00E+01 |
| Barium | 50071 | 6/19/86 | ICP | 2.80E+01 |
| Barium | 50085 | 7/07/86 | ICP | 3.30E+01 |
| Barium | 51079 | 3/21/90 | ICP | 2.50E+01 |
| Barium (EP Toxic) | 50558E | 3/15/89 | ICP | 2.41E+02 |
| Barium (EP Toxic) | 50572E | 3/29/89 | ICP | 1.96E+02 |
| Barium (EP Toxic) | 50596E | 4/12/89 | ICP | 1.62E+02 |
| Barium (EP Toxic) | 50804E | 11/28/89 | ICP | <1.00E+03 |
| Barium (EP Toxic) | 50556E | 3/15/89 | ICP | 2.38E+02 |
| Barium (EP Toxic) | 50570E | 3/29/89 | ICP | 1.91E+02 |
| Barium (EP Toxic) | 50593E | 4/11/89 | ICP | 1.74E+02 |
| Barium (EP Toxic) | 50661E | 10/09/89 | ICP | <1.00E+03 |
| Barium (EP Toxic) | 50673E | 10/11/89 | ICP | <1.00E+03 |
| Barium (EP Toxic) | 51079E | 3/21/90 | ICP | <1.00E+03 |

Table B-2. Total Data.
(sheet 3 of 49)

| Constituent | Sample # | Date | Method | Result |
|---|---|---|---|---|
| Beryllium | 50053 | 5/31/86 | ICP | <5.00E+00 |
| Beryllium | 50113 | 8/18/86 | ICP | <5.00E+00 |
| Beryllium | 50149 | 10/03/86 | ICP | <5.00E+00 |
| Beryllium | 50214 | 1/06/87 | ICP | <5.00E+00 |
| Beryllium | 50454 | 9/16/88 | ICP | <5.00E+00 |
| Beryllium | 50460 | 9/23/88 | ICP | <5.00E+00 |
| Beryllium | 50470 | 10/10/88 | ICP | <5.00E+00 |
| Beryllium | 50478 | 10/24/88 | ICP | 6.00E+00 |
| Beryllium | 50490 | 11/04/88 | ICP | <5.00E+00 |
| Beryllium | 50502 | 12/02/88 | ICP | <5.00E+00 |
| Beryllium | 50512 | 12/16/88 | ICP | <5.00E+00 |
| Beryllium | 50514 | 12/16/88 | ICP | <5.00E+00 |
| Beryllium | 50534 | 2/15/89 | ICP | <5.00E+00 |
| Beryllium | 50542 | 3/02/89 | ICP | <5.00E+00 |
| Beryllium | 50558 | 3/15/89 | ICP | <5.00E+00 |
| Beryllium | 50572 | 3/29/89 | ICP | <5.00E+00 |
| Beryllium | 50596 | 4/12/89 | ICP | <5.00E+00 |
| Beryllium | 50804 | 11/28/89 | ICP | <5.00E+00 |
| Beryllium | 50014 | 9/11/85 | ICP | <5.00E+00 |
| Beryllium | 50456 | 9/16/88 | ICP | <5.00E+00 |
| Beryllium | 50462 | 9/23/88 | ICP | <5.00E+00 |
| Beryllium | 50468 | 10/10/88 | ICP | <5.00E+00 |
| Beryllium | 50476 | 10/24/88 | ICP | <5.00E+00 |
| Beryllium | 50488 | 11/04/88 | ICP | <5.00E+00 |
| Beryllium | 50498 | 11/18/88 | ICP | <5.00E+00 |
| Beryllium | 50500 | 12/02/88 | ICP | <5.00E+00 |
| Beryllium | 50532 | 2/15/89 | ICP | <5.00E+00 |
| Beryllium | 50544 | 3/02/89 | ICP | <5.00E+00 |
| Beryllium | 50556 | 3/15/89 | ICP | <5.00E+00 |
| Beryllium | 50570 | 3/29/89 | ICP | <5.00E+00 |
| Beryllium | 50593 | 4/11/89 | ICP | <5.00E+00 |
| Beryllium | 50661 | 10/09/89 | ICP | <5.00E+00 |
| Beryllium | 50673 | 10/11/89 | ICP | <5.00E+00 |
| Beryllium | 50071 | 6/19/86 | ICP | <5.00E+00 |
| Beryllium | 50085 | 7/07/86 | ICP | <5.00E+00 |
| Beryllium | 51079 | 3/21/90 | ICP | <5.00E+00 |
| Boron | 50534 | 2/15/89 | ICP | <1.00E+01 |
| Boron | 50542 | 3/02/89 | ICP | <1.00E+01 |
| Boron | 50558 | 3/15/89 | ICP | 1.90E+01 |
| Boron | 50572 | 3/29/89 | ICP | <1.00E+01 |
| Boron | 50596 | 4/12/89 | ICP | <1.00E+01 |
| Boron | 50804 | 11/28/89 | ICP | <1.00E+01 |
| Boron | 50532 | 2/15/89 | ICP | <1.00E+01 |
| Boron | 50544 | 3/02/89 | ICP | <1.00E+01 |
| Boron | 50556 | 3/15/89 | ICP | 2.00E+01 |
| Boron | 50570 | 3/29/89 | ICP | <1.00E+01 |

Table B-2. Total Data.
(sheet 4 of 49)

| Constituent | Sample # | Date | Method | Result |
|---|---|---|---|---|
| Boron | 50593 | 4/11/89 | ICP | <1.00E+01 |
| Boron | 50661 | 10/09/89 | ICP | 1.70E+01 |
| Boron | 50673 | 10/11/89 | ICP | 1.60E+01 |
| Boron | 51079 | 3/21/90 | ICP | 2.30E+01 |
| Cadmium | 50053 | 5/31/86 | ICP | <2.00E+00 |
| Cadmium | 50113 | 8/18/86 | ICP | <2.00E+00 |
| Cadmium | 50149 | 10/03/86 | ICP | <2.00E+00 |
| Cadmium | 50214 | 1/06/87 | ICP | <2.00E+00 |
| Cadmium | 50454 | 9/16/88 | ICP | <2.00E+00 |
| Cadmium | 50460 | 9/23/88 | ICP | <2.00E+00 |
| Cadmium | 50470 | 10/10/88 | ICP | <2.00E+00 |
| Cadmium | 50478 | 10/24/88 | ICP | <2.00E+00 |
| Cadmium | 50490 | 11/04/88 | ICP | <2.00E+00 |
| Cadmium | 50502 | 12/02/88 | ICP | <2.00E+00 |
| Cadmium | 50512 | 12/16/88 | ICP | <2.00E+00 |
| Cadmium | 50514 | 12/16/88 | ICP | <2.00E+00 |
| Cadmium | 50534 | 2/15/89 | ICP | <2.00E+00 |
| Cadmium | 50542 | 3/02/89 | ICP | <2.00E+00 |
| Cadmium | 50558 | 3/15/89 | ICP | <2.00E+00 |
| Cadmium | 50572 | 3/29/89 | ICP | <2.00E+00 |
| Cadmium | 50596 | 4/12/89 | ICP | <2.00E+00 |
| Cadmium | 50804 | 11/28/89 | ICP | <2.00E+00 |
| Cadmium | 50014 | 9/11/85 | ICP | <2.00E+00 |
| Cadmium | 50456 | 9/16/88 | ICP | <2.00E+00 |
| Cadmium | 50462 | 9/23/88 | ICP | 5.00E+00 |
| Cadmium | 50468 | 10/10/88 | ICP | <2.00E+00 |
| Cadmium | 50476 | 10/24/88 | ICP | <2.00E+00 |
| Cadmium | 50488 | 11/04/88 | ICP | <2.00E+00 |
| Cadmium | 50498 | 11/18/88 | ICP | <2.00E+00 |
| Cadmium | 50500 | 12/02/88 | ICP | <2.00E+00 |
| Cadmium | 50532 | 2/15/89 | ICP | <2.00E+00 |
| Cadmium | 50544 | 3/02/89 | ICP | <2.00E+00 |
| Cadmium | 50556 | 3/15/89 | ICP | <2.00E+00 |
| Cadmium | 50570 | 3/29/89 | ICP | <2.00E+00 |
| Cadmium | 50593 | 4/11/89 | ICP | <2.00E+00 |
| Cadmium | 50661 | 10/09/89 | ICP | <2.00E+00 |
| Cadmium | 50673 | 10/11/89 | ICP | <2.00E+00 |
| Cadmium | 50071 | 6/19/86 | ICP | <2.00E+00 |
| Cadmium | 50085 | 7/07/86 | ICP | <2.00E+00 |
| Cadmium | 51079 | 3/21/90 | ICP | <2.00E+00 |
| Cadmium (EP Toxic) | 50558E | 3/15/89 | ICP | <1.00E+01 |
| Cadmium (EP Toxic) | 50572E | 3/29/89 | ICP | 1.90E+01 |
| Cadmium (EP Toxic) | 50596E | 4/12/89 | ICP | <1.00E+01 |
| Cadmium (EP Toxic) | 50804E | 11/28/89 | ICP | <1.00E+02 |
| Cadmium (EP Toxic) | 50556E | 3/15/89 | ICP | <1.00E+01 |
| Cadmium (EP Toxic) | 50570E | 3/29/89 | ICP | <1.00E+01 |

Table B-2. Total Data.
(sheet 5 of 49)

| Constituent | Sample # | Date | Method | Result |
|---|---|---|---|---|
| Cadmium (EP Toxic) | 50593E | 4/11/89 | ICP | <1.00E+01 |
| Cadmium (EP Toxic) | 50661E | 10/09/89 | ICP | <1.00E+02 |
| Cadmium (EP Toxic) | 50673E | 10/11/89 | ICP | <1.00E+02 |
| Cadmium (EP Toxic) | 51079E | 3/21/90 | ICP | <1.00E+02 |
| Calcium | 50053 | 5/31/86 | ICP | 2.00E+04 |
| Calcium | 50113 | 8/18/86 | ICP | 1.89E+04 |
| Calcium | 50149 | 10/03/86 | ICP | 1.77E+04 |
| Calcium | 50214 | 1/06/87 | ICP | 1.71E+04 |
| Calcium | 50454 | 9/16/88 | ICP | 1.85E+04 |
| Calcium | 50460 | 9/23/88 | ICP | 1.75E+04 |
| Calcium | 50470 | 10/10/88 | ICP | 2.15E+04 |
| Calcium | 50478 | 10/24/88 | ICP | 1.75E+04 |
| Calcium | 50490 | 11/04/88 | ICP | 1.63E+04 |
| Calcium | 50502 | 12/02/88 | ICP | 1.36E+04 |
| Calcium | 50512 | 12/16/88 | ICP | 1.51E+04 |
| Calcium | 50514 | 12/16/88 | ICP | 1.56E+04 |
| Calcium | 50534 | 2/15/89 | ICP | 1.41E+04 |
| Calcium | 50542 | 3/02/89 | ICP | 1.52E+04 |
| Calcium | 50558 | 3/15/89 | ICP | 1.67E+04 |
| Calcium | 50572 | 3/29/89 | ICP | 1.86E+04 |
| Calcium | 50596 | 4/12/89 | ICP | 2.00E+04 |
| Calcium | 50804 | 11/28/89 | ICP | 1.55E+04 |
| Calcium | 50014 | 9/11/85 | ICP | 1.81E+04 |
| Calcium | 50456 | 9/16/88 | ICP | 1.88E+04 |
| Calcium | 50462 | 9/23/88 | ICP | 2.02E+04 |
| Calcium | 50468 | 10/10/88 | ICP | 1.77E+04 |
| Calcium | 50476 | 10/24/88 | ICP | 1.68E+04 |
| Calcium | 50488 | 11/04/88 | ICP | 1.55E+04 |
| Calcium | 50498 | 11/18/88 | ICP | 1.41E+04 |
| Calcium | 50500 | 12/02/88 | ICP | 1.41E+04 |
| Calcium | 50532 | 2/15/89 | ICP | 1.31E+04 |
| Calcium | 50544 | 3/02/89 | ICP | 1.57E+04 |
| Calcium | 50556 | 3/15/89 | ICP | 1.64E+04 |
| Calcium | 50570 | 3/29/89 | ICP | 1.94E+04 |
| Calcium | 50593 | 4/11/89 | ICP | 2.04E+04 |
| Calcium | 50661 | 10/09/89 | ICP | 1.90E+04 |
| Calcium | 50673 | 10/11/89 | ICP | 1.76E+04 |
| Calcium | 50071 | 6/19/86 | ICP | 1.71E+04 |
| Calcium | 50085 | 7/07/86 | ICP | 1.85E+04 |
| Calcium | 51079 | 3/21/90 | ICP | 1.57E+04 |
| Chloride | 50053 | 5/31/86 | IC | 3.31E+03 |
| Chloride | 50113 | 8/18/86 | IC | 4.86E+03 |
| Chloride | 50149 | 10/03/86 | IC | 2.36E+03 |
| Chloride | 50214 | 1/06/87 | IC | 2.01E+03 |
| Chloride | 50454 | 9/16/88 | IC | 2.80E+03 |
| Chloride | 50460 | 9/23/88 | IC | 2.23E+03 |

Table B-2. Total Data.
(sheet 6 of 49)

| Constituent | Sample # | Date | Method | Result |
|---|---|---|---|---|
| Chloride | 50470 | 10/10/88 | IC | 2.12E+03 |
| Chloride | 50478 | 10/24/88 | IC | 2.00E+03 |
| Chloride | 50490 | 11/04/88 | IC | 2.10E+03 |
| Chloride | 50502 | 12/02/88 | IC | 1.40E+03 |
| Chloride | 50512 | 12/16/88 | IC | 1.50E+03 |
| Chloride | 50514 | 12/16/88 | IC | 1.60E+03 |
| Chloride | 50534 | 2/15/89 | IC | 1.30E+03 |
| Chloride | 50542 | 3/02/89 | IC | 1.40E+03 |
| Chloride | 50558 | 3/15/89 | IC | 1.80E+03 |
| Chloride | 50572 | 3/29/89 | IC | 2.10E+03 |
| Chloride | 50596 | 4/12/89 | IC | 2.30E+03 |
| Chloride | 50804 | 11/28/89 | IC | 2.30E+03 |
| Chloride | 50014 | 9/11/85 | IC | 2.19E+03 |
| Chloride | 50456 | 9/16/88 | IC | 2.80E+03 |
| Chloride | 50462 | 9/23/88 | IC | 2.25E+03 |
| Chloride | 50468 | 10/10/88 | IC | 2.26E+03 |
| Chloride | 50476 | 10/24/88 | IC | 1.90E+03 |
| Chloride | 50488 | 11/04/88 | IC | 2.10E+03 |
| Chloride | 50498 | 11/18/88 | IC | 1.70E+03 |
| Chloride | 50500 | 12/02/88 | IC | 1.50E+03 |
| Chloride | 50532 | 2/15/89 | IC | 1.20E+03 |
| Chloride | 50544 | 3/02/89 | IC | 1.40E+03 |
| Chloride | 50556 | 3/15/89 | IC | 1.70E+03 |
| Chloride | 50570 | 3/29/89 | IC | 2.00E+03 |
| Chloride | 50593 | 4/11/89 | IC | 2.10E+03 |
| Chloride | 50661 | 10/09/89 | IC | 5.20E+03 |
| Chloride | 50673 | 10/11/89 | IC | 5.10E+03 |
| Chloride | 50071 | 6/19/86 | IC | 1.14E+03 |
| Chloride | 50085 | 7/07/86 | IC | 5.49E+04 |
| Chloride | 51079 | 3/21/90 | IC | 2.20E+03 |
| Chromium | 50053 | 5/31/86 | ICP | <1.00E+01 |
| Chromium | 50113 | 8/18/86 | ICP | <1.00E+01 |
| Chromium | 50149 | 10/03/86 | ICP | <1.00E+01 |
| Chromium | 50214 | 1/06/87 | ICP | <1.00E+01 |
| Chromium | 50454 | 9/16/88 | ICP | <1.00E+01 |
| Chromium | 50460 | 9/23/88 | ICP | <1.00E+01 |
| Chromium | 50470 | 10/10/88 | ICP | <1.00E+01 |
| Chromium | 50478 | 10/24/88 | ICP | <1.00E+01 |
| Chromium | 50490 | 11/04/88 | ICP | <1.00E+01 |
| Chromium | 50502 | 12/02/88 | ICP | <1.00E+01 |
| Chromium | 50512 | 12/16/88 | ICP | <1.00E+01 |
| Chromium | 50514 | 12/16/88 | ICP | <1.00E+01 |
| Chromium | 50534 | 2/15/89 | ICP | <1.00E+01 |
| Chromium | 50542 | 3/02/89 | ICP | <1.00E+01 |
| Chromium | 50558 | 3/15/89 | ICP | <1.00E+01 |
| Chromium | 50572 | 3/29/89 | ICP | <1.00E+01 |

Table B-2. Total Data.
(sheet 7 of 49)

| Constituent | Sample # | Date | Method | Result |
|---|---|---|---|---|
| Chromium | 50596 | 4/12/89 | ICP | <1.00E+01 |
| Chromium | 50804 | 11/28/89 | ICP | <1.00E+01 |
| Chromium | 50014 | 9/11/85 | ICP | 1.10E+01 |
| Chromium | 50456 | 9/16/88 | ICP | <1.00E+01 |
| Chromium | 50462 | 9/23/88 | ICP | <1.00E+01 |
| Chromium | 50468 | 10/10/88 | ICP | <1.00E+01 |
| Chromium | 50476 | 10/24/88 | ICP | <1.00E+01 |
| Chromium | 50488 | 11/04/88 | ICP | <1.00E+01 |
| Chromium | 50498 | 11/18/88 | ICP | <1.00E+01 |
| Chromium | 50500 | 12/02/88 | ICP | <1.00E+01 |
| Chromium | 50532 | 2/15/89 | ICP | <1.00E+01 |
| Chromium | 50544 | 3/02/89 | ICP | <1.00E+01 |
| Chromium | 50556 | 3/15/89 | ICP | <1.00E+01 |
| Chromium | 50570 | 3/29/89 | ICP | <1.00E+01 |
| Chromium | 50593 | 4/11/89 | ICP | <1.00E+01 |
| Chromium | 50661 | 10/09/89 | ICP | <1.00E+01 |
| Chromium | 50673 | 10/11/89 | ICP | <1.00E+01 |
| Chromium | 50071 | 6/19/86 | ICP | 4.20E+01 |
| Chromium | 50085 | 7/07/86 | ICP | <1.00E+01 |
| Chromium | 51079 | 3/21/90 | ICP | <1.00E+01 |
| Chromium (EP Toxic) | 50558E | 3/15/89 | ICP | <5.00E+01 |
| Chromium (EP Toxic) | 50572E | 3/29/89 | ICP | <5.00E+01 |
| Chromium (EP Toxic) | 50596E | 4/12/89 | ICP | <5.00E+01 |
| Chromium (EP Toxic) | 50804E | 11/28/89 | ICP | <5.00E+02 |
| Chromium (EP Toxic) | 50556E | 3/15/89 | ICP | <5.00E+01 |
| Chromium (EP Toxic) | 50570E | 3/29/89 | ICP | <5.00E+01 |
| Chromium (EP Toxic) | 50593E | 4/11/89 | ICP | <5.00E+01 |
| Chromium (EP Toxic) | 50661E | 10/09/89 | ICP | <5.00E+02 |
| Chromium (EP Toxic) | 50673E | 10/11/89 | ICP | <5.00E+02 |
| Chromium (EP Toxic) | 51079E | 3/21/90 | ICP | <5.00E+02 |
| Copper | 50053 | 5/31/86 | ICP | 1.70E+01 |
| Copper | 50113 | 8/18/86 | ICP | 1.40E+01 |
| Copper | 50149 | 10/03/86 | ICP | 1.95E+02 |
| Copper | 50214 | 1/06/87 | ICP | 1.96E+02 |
| Copper | 50454 | 9/16/88 | ICP | 2.20E+01 |
| Copper | 50460 | 9/23/88 | ICP | 4.40E+01 |
| Copper | 50470 | 10/10/88 | ICP | 7.80E+01 |
| Copper | 50478 | 10/24/88 | ICP | 9.60E+01 |
| Copper | 50490 | 11/04/88 | ICP | 1.10E+02 |
| Copper | 50502 | 12/02/88 | ICP | 2.39E+02 |
| Copper | 50512 | 12/16/88 | ICP | 2.31E+02 |
| Copper | 50514 | 12/16/88 | ICP | 2.62E+02 |
| Copper | 50534 | 2/15/89 | ICP | 1.25E+02 |
| Copper | 50542 | 3/02/89 | ICP | 2.01E+02 |
| Copper | 50558 | 3/15/89 | ICP | 1.92E+02 |
| Copper | 50572 | 3/29/89 | ICP | 1.75E+02 |

Table B-2. Total Data.
(sheet 8 of 49)

| Constituent | Sample # | Date | Method | Result |
|---|---|---|---|---|
| Copper | 50596 | 4/12/89 | ICP | 1.00E+02 |
| Copper | 50804 | 11/28/89 | ICP | 2.47E+02 |
| Copper | 50014 | 9/11/85 | ICP | 1.20E+02 |
| Copper | 50456 | 9/16/88 | ICP | 2.00E+01 |
| Copper | 50462 | 9/23/88 | ICP | 3.20E+01 |
| Copper | 50468 | 10/10/88 | ICP | 3.80E+01 |
| Copper | 50476 | 10/24/88 | ICP | 9.10E+01 |
| Copper | 50488 | 11/04/88 | ICP | 1.35E+02 |
| Copper | 50498 | 11/18/88 | ICP | 3.22E+02 |
| Copper | 50500 | 12/02/88 | ICP | 2.27E+02 |
| Copper | 50532 | 2/15/89 | ICP | 1.45E+02 |
| Copper | 50544 | 3/02/89 | ICP | 2.29E+02 |
| Copper | 50556 | 3/15/89 | ICP | 2.50E+02 |
| Copper | 50570 | 3/29/89 | ICP | 1.33E+02 |
| Copper | 50593 | 4/11/89 | ICP | 1.26E+02 |
| Copper | 50661 | 10/09/89 | ICP | 9.20E+01 |
| Copper | 50673 | 10/11/89 | ICP | 1.05E+02 |
| Copper | 50071 | 6/19/86 | ICP | 4.00E+01 |
| Copper | 50085 | 7/07/86 | ICP | 4.60E+01 |
| Copper | 51079 | 3/21/90 | ICP | 1.65E+02 |
| Fluoride | 50053 | 5/31/86 | IC | <5.00E+02 |
| Fluoride | 50113 | 8/18/86 | IC | <5.00E+02 |
| Fluoride | 50149 | 10/03/86 | IC | <5.00E+02 |
| Fluoride | 50214 | 1/06/87 | IC | <5.00E+02 |
| Fluoride | 50454 | 9/16/88 | IC | <5.00E+02 |
| Fluoride | 50454 | 9/16/88 | ISE | 1.16E+02 |
| Fluoride | 50460 | 9/23/88 | IC | <5.00E+02 |
| Fluoride | 50460 | 9/23/88 | ISE | 9.60E+01 |
| Fluoride | 50470 | 10/10/88 | IC | <5.00E+02 |
| Fluoride | 50470 | 10/10/88 | ISE | 9.60E+01 |
| Fluoride | 50478 | 10/24/88 | IC | <5.00E+02 |
| Fluoride | 50478 | 10/24/88 | ISE | 9.60E+01 |
| Fluoride | 50490 | 11/04/88 | IC | <5.00E+02 |
| Fluoride | 50490 | 11/04/88 | ISE | 8.50E+01 |
| Fluoride | 50502 | 12/02/88 | IC | <5.00E+02 |
| Fluoride | 50502 | 12/02/88 | ISE | 7.00E+01 |
| Fluoride | 50512 | 12/16/88 | IC | <5.00E+02 |
| Fluoride | 50512 | 12/16/88 | ISE | 9.00E+01 |
| Fluoride | 50514 | 12/16/88 | IC | <5.00E+02 |
| Fluoride | 50514 | 12/16/88 | ISE | 8.00E+01 |
| Fluoride | 50534 | 2/15/89 | IC | <5.00E+02 |
| Fluoride | 50534 | 2/15/89 | ISE | 7.10E+01 |
| Fluoride | 50542 | 3/02/89 | IC | <5.00E+02 |
| Fluoride | 50542 | 3/02/89 | ISE | 7.00E+01 |
| Fluoride | 50558 | 3/15/89 | IC | <5.00E+02 |
| Fluoride | 50558 | 3/15/89 | ISE | 9.00E+01 |

Table B-2. Total Data.
(sheet 9 of 49)

| Constituent | Sample # | Date | Method | Result |
|---|---|---|---|---|
| Fluoride | 50572 | 3/29/89 | IC | <5.00E+02 |
| Fluoride | 50572 | 3/29/89 | ISE | 8.00E+01 |
| Fluoride | 50596 | 4/12/89 | IC | <5.00E+02 |
| Fluoride | 50596 | 4/12/89 | ISE | 1.20E+02 |
| Fluoride | 50804 | 11/28/89 | IC | <5.00E+02 |
| Fluoride | 50804 | 11/28/89 | ISE | 1.19E+02 |
| Fluoride | 50014 | 9/11/85 | IC | <5.00E+02 |
| Fluoride | 50456 | 9/16/88 | IC | <5.00E+02 |
| Fluoride | 50456 | 9/16/88 | ISE | 1.17E+02 |
| Fluoride | 50462 | 9/23/88 | IC | <5.00E+02 |
| Fluoride | 50462 | 9/23/88 | ISE | 9.90E+01 |
| Fluoride | 50468 | 10/10/88 | IC | <5.00E+02 |
| Fluoride | 50468 | 10/10/88 | ISE | 9.70E+01 |
| Fluoride | 50476 | 10/24/88 | IC | <5.00E+02 |
| Fluoride | 50476 | 10/24/88 | ISE | 9.40E+01 |
| Fluoride | 50488 | 11/04/88 | IC | <5.00E+02 |
| Fluoride | 50488 | 11/04/88 | ISE | 1.02E+02 |
| Fluoride | 50498 | 11/18/88 | IC | 1.90E+03 |
| Fluoride | 50498 | 11/18/88 | ISE | 1.99E+03 |
| Fluoride | 50500 | 12/02/88 | IC | <5.00E+02 |
| Fluoride | 50500 | 12/02/88 | ISE | 7.00E+01 |
| Fluoride | 50532 | 2/15/89 | IC | <5.00E+02 |
| Fluoride | 50532 | 2/15/89 | ISE | 4.77E+02 |
| Fluoride | 50544 | 3/02/89 | IC | <5.00E+02 |
| Fluoride | 50544 | 3/02/89 | ISE | 7.00E+01 |
| Fluoride | 50556 | 3/15/89 | IC | <5.00E+02 |
| Fluoride | 50556 | 3/15/89 | ISE | 8.00E+01 |
| Fluoride | 50570 | 3/29/89 | IC | <5.00E+02 |
| Fluoride | 50570 | 3/29/89 | ISE | 8.00E+01 |
| Fluoride | 50593 | 4/11/89 | IC | <5.00E+02 |
| Fluoride | 50593 | 4/11/89 | ISE | 1.00E+02 |
| Fluoride | 50661 | 10/09/89 | IC | <5.00E+02 |
| Fluoride | 50661 | 10/09/89 | ISE | 1.42E+02 |
| Fluoride | 50673 | 10/11/89 | IC | <5.00E+02 |
| Fluoride | 50673 | 10/11/89 | ISE | 1.35E+02 |
| Fluoride | 50071 | 6/19/86 | IC | <5.00E+02 |
| Fluoride | 50085 | 7/07/86 | IC | <5.00E+02 |
| Fluoride | 51079 | 3/21/90 | IC | <5.00E+02 |
| Fluoride | 51079 | 3/21/90 | ISE | 1.04E+02 |
| Iron | 50053 | 5/31/86 | ICP | 9.00E+01 |
| Iron | 50113 | 8/18/86 | ICP | 6.10E+01 |
| Iron | 50149 | 10/03/86 | ICP | 6.80E+01 |
| Iron | 50214 | 1/06/87 | ICP | 5.60E+01 |
| Iron | 50454 | 9/16/88 | ICP | 4.50E+01 |
| Iron | 50460 | 9/23/88 | ICP | 6.00E+01 |
| Iron | 50470 | 10/10/88 | ICP | 7.70E+01 |

Table B-2. Total Data.
(sheet 10 of 49)

| Constituent | Sample # | Date | Method | Result |
|---|---|---|---|---|
| Iron | 50478 | 10/24/88 | ICP | 5.20E+01 |
| Iron | 50490 | 11/04/88 | ICP | 8.50E+01 |
| Iron | 50502 | 12/02/88 | ICP | 6.60E+01 |
| Iron | 50512 | 12/16/88 | ICP | 9.60E+01 |
| Iron | 50514 | 12/16/88 | ICP | 9.00E+01 |
| Iron | 50534 | 2/15/89 | ICP | 6.60E+01 |
| Iron | 50542 | 3/02/89 | ICP | 7.80E+01 |
| Iron | 50558 | 3/15/89 | ICP | 1.08E+02 |
| Iron | 50572 | 3/29/89 | ICP | 1.16E+02 |
| Iron | 50596 | 4/12/89 | ICP | 1.96E+02 |
| Iron | 50804 | 11/28/89 | ICP | 4.50E+01 |
| Iron | 50014 | 9/11/85 | ICP | 6.30E+02 |
| Iron | 50456 | 9/16/88 | ICP | 6.50E+01 |
| Iron | 50462 | 9/23/88 | ICP | 7.90E+01 |
| Iron | 50468 | 10/10/88 | ICP | 5.70E+01 |
| Iron | 50476 | 10/24/88 | ICP | 5.40E+01 |
| Iron | 50488 | 11/04/88 | ICP | 8.00E+01 |
| Iron | 50498 | 11/18/88 | ICP | 8.00E+01 |
| Iron | 50500 | 12/02/88 | ICP | 7.20E+01 |
| Iron | 50532 | 2/15/89 | ICP | 5.90E+01 |
| Iron | 50544 | 3/02/89 | ICP | 9.00E+01 |
| Iron | 50556 | 3/15/89 | ICP | 8.40E+01 |
| Iron | 50570 | 3/29/89 | ICP | 8.90E+01 |
| Iron | 50593 | 4/11/89 | ICP | 1.04E+02 |
| Iron | 50661 | 10/09/89 | ICP | 1.10E+02 |
| Iron | 50673 | 10/11/89 | ICP | 2.25E+02 |
| Iron | 50071 | 6/19/86 | ICP | 5.60E+02 |
| Iron | 50085 | 7/07/86 | ICP | 1.22E+02 |
| Iron | 51079 | 3/21/90 | ICP | 1.25E+02 |
| Lead (EP Toxic) | 50558E | 3/15/89 | ICP | <5.00E+01 |
| Lead (EP Toxic) | 50572E | 3/29/89 | ICP | <5.00E+01 |
| Lead (EP Toxic) | 50596E | 4/12/89 | ICP | <5.00E+01 |
| Lead (EP Toxic) | 50804E | 11/28/89 | ICP | <5.00E+02 |
| Lead (EP Toxic) | 50556E | 3/15/89 | ICP | <5.00E+01 |
| Lead (EP Toxic) | 50570E | 3/29/89 | ICP | <5.00E+01 |
| Lead (EP Toxic) | 50593E | 4/11/89 | ICP | <5.00E+01 |
| Lead (EP Toxic) | 50661E | 10/09/89 | ICP | <5.00E+02 |
| Lead (EP Toxic) | 50673E | 10/11/89 | ICP | <5.00E+02 |
| Lead (EP Toxic) | 51079E | 3/21/90 | ICP | <5.00E+02 |
| Magnesium | 50053 | 5/31/86 | ICP | 4.55E+03 |
| Magnesium | 50113 | 8/18/86 | ICP | 4.13E+03 |
| Magnesium | 50149 | 10/03/86 | ICP | 3.85E+03 |
| Magnesium | 50214 | 1/06/87 | ICP | 3.88E+03 |
| Magnesium | 50454 | 9/16/88 | ICP | 3.95E+03 |
| Magnesium | 50460 | 9/23/88 | ICP | 3.73E+03 |
| Magnesium | 50470 | 10/10/88 | ICP | 4.70E+03 |

Table B-2. Total Data.
(sheet 11 of 49)

| Constituent | Sample # | Date | Method | Result |
|---|---|---|---|---|
| Magnesium | 50478 | 10/24/88 | ICP | 3.64E+03 |
| Magnesium | 50490 | 11/04/88 | ICP | 3.24E+03 |
| Magnesium | 50502 | 12/02/88 | ICP | 2.81E+03 |
| Magnesium | 50512 | 12/16/88 | ICP | 3.37E+03 |
| Magnesium | 50514 | 12/16/88 | ICP | 3.49E+03 |
| Magnesium | 50534 | 2/15/89 | ICP | 3.17E+03 |
| Magnesium | 50542 | 3/02/89 | ICP | 3.65E+03 |
| Magnesium | 50558 | 3/15/89 | ICP | 4.03E+03 |
| Magnesium | 50572 | 3/29/89 | ICP | 4.52E+03 |
| Magnesium | 50596 | 4/12/89 | ICP | 4.83E+03 |
| Magnesium | 50804 | 11/28/89 | ICP | 3.53E+03 |
| Magnesium | 50014 | 9/11/85 | ICP | 3.78E+03 |
| Magnesium | 50456 | 9/16/88 | ICP | 4.01E+03 |
| Magnesium | 50462 | 9/23/88 | ICP | 4.29E+03 |
| Magnesium | 50468 | 10/10/88 | ICP | 3.85E+03 |
| Magnesium | 50476 | 10/24/88 | ICP | 3.50E+03 |
| Magnesium | 50488 | 11/04/88 | ICP | 3.13E+03 |
| Magnesium | 50498 | 11/18/88 | ICP | 2.94E+03 |
| Magnesium | 50500 | 12/02/88 | ICP | 2.95E+03 |
| Magnesium | 50532 | 2/15/89 | ICP | 2.94E+03 |
| Magnesium | 50544 | 3/02/89 | ICP | 3.75E+03 |
| Magnesium | 50556 | 3/15/89 | ICP | 3.97E+03 |
| Magnesium | 50570 | 3/29/89 | ICP | 4.70E+03 |
| Magnesium | 50593 | 4/11/89 | ICP | 4.87E+03 |
| Magnesium | 50661 | 10/09/89 | ICP | 4.35E+03 |
| Magnesium | 50673 | 10/11/89 | ICP | 4.07E+03 |
| Magnesium | 50071 | 6/19/86 | ICP | 3.86E+03 |
| Magnesium | 50085 | 7/07/86 | ICP | 4.18E+03 |
| Magnesium | 51079 | 3/21/90 | ICP | 3.83E+03 |
| Manganese | 50053 | 5/31/86 | ICP | 9.00E+00 |
| Manganese | 50113 | 8/18/86 | ICP | 5.00E+00 |
| Manganese | 50149 | 10/03/86 | ICP | 1.90E+01 |
| Manganese | 50214 | 1/06/87 | ICP | 5.00E+00 |
| Manganese | 50454 | 9/16/88 | ICP | 6.00E+00 |
| Manganese | 50460 | 9/23/88 | ICP | 7.00E+00 |
| Manganese | 50470 | 10/10/88 | ICP | 7.00E+00 |
| Manganese | 50478 | 10/24/88 | ICP | <5.00E+00 |
| Manganese | 50490 | 11/04/88 | ICP | 5.00E+00 |
| Manganese | 50502 | 12/02/88 | ICP | <5.00E+00 |
| Manganese | 50512 | 12/16/88 | ICP | <5.00E+00 |
| Manganese | 50514 | 12/16/88 | ICP | 5.00E+00 |
| Manganese | 50534 | 2/15/89 | ICP | <5.00E+00 |
| Manganese | 50542 | 3/02/89 | ICP | <5.00E+00 |
| Manganese | 50558 | 3/15/89 | ICP | <5.00E+00 |
| Manganese | 50572 | 3/29/89 | ICP | <5.00E+00 |
| Manganese | 50596 | 4/12/89 | ICP | 6.00E+00 |

Table B-2. Total Data.
(sheet 12 of 49)

| Constituent | Sample # | Date | Method | Result |
|---|---|---|---|---|
| Manganese | 50804 | 11/28/89 | ICP | <5.00E+00 |
| Manganese | 50014 | 9/11/85 | ICP | 2.00E+01 |
| Manganese | 50456 | 9/16/88 | ICP | 6.00E+00 |
| Manganese | 50462 | 9/23/88 | ICP | 7.00E+00 |
| Manganese | 50468 | 10/10/88 | ICP | <5.00E+00 |
| Manganese | 50476 | 10/24/88 | ICP | 5.00E+00 |
| Manganese | 50488 | 11/04/88 | ICP | <5.00E+00 |
| Manganese | 50498 | 11/18/88 | ICP | <5.00E+00 |
| Manganese | 50500 | 12/02/88 | ICP | 7.00E+00 |
| Manganese | 50532 | 2/15/89 | ICP | <5.00E+00 |
| Manganese | 50544 | 3/02/89 | ICP | <5.00E+00 |
| Manganese | 50556 | 3/15/89 | ICP | <5.00E+00 |
| Manganese | 50570 | 3/29/89 | ICP | <5.00E+00 |
| Manganese | 50593 | 4/11/89 | ICP | <5.00E+00 |
| Manganese | 50661 | 10/09/89 | ICP | 1.00E+01 |
| Manganese | 50673 | 10/11/89 | ICP | 9.00E+00 |
| Manganese | 50071 | 6/19/86 | ICP | 1.40E+01 |
| Manganese | 50085 | 7/07/86 | ICP | 1.10E+01 |
| Manganese | 51079 | 3/21/90 | ICP | <5.00E+00 |
| Mercury | 50053 | 5/31/86 | CVAA | <1.00E-01 |
| Mercury | 50113 | 8/18/86 | CVAA | 3.50E-01 |
| Mercury | 50149 | 10/03/86 | CVAA | 1.25E+00 |
| Mercury | 50214 | 1/06/87 | CVAA | 2.10E-01 |
| Mercury | 50454 | 9/16/88 | CVAA | 1.00E-01 |
| Mercury | 50460 | 9/23/88 | CVAA | <1.00E-01 |
| Mercury | 50470 | 10/10/88 | CVAA | <1.00E-01 |
| Mercury | 50478 | 10/24/88 | CVAA | <1.00E-01 |
| Mercury | 50490 | 11/04/88 | CVAA | <1.00E-01 |
| Mercury | 50502 | 12/02/88 | CVAA | <1.00E-01 |
| Mercury | 50512 | 12/16/88 | CVAA | <1.00E-01 |
| Mercury | 50514 | 12/16/88 | CVAA | <1.00E-01 |
| Mercury | 50534 | 2/15/89 | CVAA | <1.00E-01 |
| Mercury | 50542 | 3/02/89 | CVAA | <1.00E-01 |
| Mercury | 50558 | 3/15/89 | CVAA | <1.00E-01 |
| Mercury | 50572 | 3/29/89 | CVAA | <1.00E-01 |
| Mercury | 50596 | 4/12/89 | CVAA | <1.00E-01 |
| Mercury | 50804 | 11/28/89 | CVAA | <1.00E-01 |
| Mercury | 50014 | 9/11/85 | CVAA | 1.00E-01 |
| Mercury | 50456 | 9/16/88 | CVAA | <1.00E-01 |
| Mercury | 50462 | 9/23/88 | CVAA | 1.00E-01 |
| Mercury | 50468 | 10/10/88 | CVAA | <1.00E-01 |
| Mercury | 50476 | 10/24/88 | CVAA | <1.00E-01 |
| Mercury | 50488 | 11/04/88 | CVAA | <1.00E-01 |
| Mercury | 50498 | 11/18/88 | CVAA | <1.00E-01 |
| Mercury | 50500 | 12/02/88 | CVAA | <1.00E-01 |
| Mercury | 50532 | 2/15/89 | CVAA | <1.00E-01 |

Table B-2. Total Data.
(sheet 13 of 49)

| Constituent | Sample # | Date | Method | Result |
|---|---|---|---|---|
| Mercury | 50544 | 3/02/89 | CVAA | <1.00E-01 |
| Mercury | 50556 | 3/15/89 | CVAA | <1.00E-01 |
| Mercury | 50570 | 3/29/89 | CVAA | <1.00E-01 |
| Mercury | 50593 | 4/11/89 | CVAA | <1.00E-01 |
| Mercury | 50661 | 10/09/89 | CVAA | <1.00E-01 |
| Mercury | 50673 | 10/11/89 | CVAA | <1.00E-01 |
| Mercury | 50071 | 6/19/86 | CVAA | 3.80E-01 |
| Mercury | 50085 | 7/07/86 | CVAA | 4.20E+00 |
| Mercury | 51079 | 3/21/90 | CVAA | <1.00E-01 |
| Mercury (EP Toxic) | 50558E | 3/15/89 | CVAA/M | <1.00E+01 |
| Mercury (EP Toxic) | 50572E | 3/29/89 | CVAA/M | <1.00E+01 |
| Mercury (EP Toxic) | 50596E | 4/12/89 | CVAA/M | <1.00E+01 |
| Mercury (EP Toxic) | 50804E | 11/28/89 | CVAA/M | <2.00E+01 |
| Mercury (EP Toxic) | 50556E | 3/15/89 | CVAA/M | <1.00E+01 |
| Mercury (EP Toxic) | 50570E | 3/29/89 | CVAA/M | <1.00E+01 |
| Mercury (EP Toxic) | 50593E | 4/11/89 | CVAA/M | <1.00E+01 |
| Mercury (EP Toxic) | 50661E | 10/09/89 | CVAA/M | <2.00E+01 |
| Mercury (EP Toxic) | 50673E | 10/11/89 | CVAA/M | <2.00E+01 |
| Mercury (EP Toxic) | 51079E | 3/21/90 | CVAA/M | <2.00E+01 |
| Nickel | 50053 | 5/31/86 | ICP | <1.00E+01 |
| Nickel | 50113 | 8/18/86 | ICP | <1.00E+01 |
| Nickel | 50149 | 10/03/86 | ICP | <1.00E+01 |
| Nickel | 50214 | 1/06/87 | ICP | <1.00E+01 |
| Nickel | 50454 | 9/16/88 | ICP | <1.00E+01 |
| Nickel | 50460 | 9/23/88 | ICP | <1.00E+01 |
| Nickel | 50470 | 10/10/88 | ICP | <1.00E+01 |
| Nickel | 50478 | 10/24/88 | ICP | <1.00E+01 |
| Nickel | 50490 | 11/04/88 | ICP | <1.00E+01 |
| Nickel | 50502 | 12/02/88 | ICP | <1.00E+01 |
| Nickel | 50512 | 12/16/88 | ICP | <1.00E+01 |
| Nickel | 50514 | 12/16/88 | ICP | <1.00E+01 |
| Nickel | 50534 | 2/15/89 | ICP | <1.00E+01 |
| Nickel | 50542 | 3/02/89 | ICP | <1.00E+01 |
| Nickel | 50558 | 3/15/89 | ICP | <1.00E+01 |
| Nickel | 50572 | 3/29/89 | ICP | <1.00E+01 |
| Nickel | 50596 | 4/12/89 | ICP | <1.00E+01 |
| Nickel | 50804 | 11/28/89 | ICP | <1.00E+01 |
| Nickel | 50014 | 9/11/85 | ICP | <1.00E+01 |
| Nickel | 50456 | 9/16/88 | ICP | <1.00E+01 |
| Nickel | 50462 | 9/23/88 | ICP | <1.00E+01 |
| Nickel | 50468 | 10/10/88 | ICP | <1.00E+01 |
| Nickel | 50476 | 10/24/88 | ICP | <1.00E+01 |
| Nickel | 50488 | 11/04/88 | ICP | <1.00E+01 |
| Nickel | 50498 | 11/18/88 | ICP | <1.00E+01 |
| Nickel | 50500 | 12/02/88 | ICP | <1.00E+01 |
| Nickel | 50532 | 2/15/89 | ICP | <1.00E+01 |

Table B-2. Total Data.
(sheet 14 of 49)

| Constituent | Sample # | Date | Method | Result |
|---|---|---|---|---|
| Nickel | 50544 | 3/02/89 | ICP | <1.00E+01 |
| Nickel | 50556 | 3/15/89 | ICP | <1.00E+01 |
| Nickel | 50570 | 3/29/89 | ICP | <1.00E+01 |
| Nickel | 50593 | 4/11/89 | ICP | <1.00E+01 |
| Nickel | 50661 | 10/09/89 | ICP | <1.00E+01 |
| Nickel | 50673 | 10/11/89 | ICP | <1.00E+01 |
| Nickel | 50071 | 6/19/86 | ICP | 1.20E+01 |
| Nickel | 50085 | 7/07/86 | ICP | <1.00E+01 |
| Nickel | 51079 | 3/21/90 | ICP | <1.00E+01 |
| Nitrate | 50053 | 5/31/86 | IC | 8.13E+02 |
| Nitrate | 50113 | 8/18/86 | IC | <5.00E+02 |
| Nitrate | 50149 | 10/03/86 | IC | 1.98E+03 |
| Nitrate | 50214 | 1/06/87 | IC | 1.64E+03 |
| Nitrate | 50454 | 9/16/88 | IC | 5.49E+02 |
| Nitrate | 50460 | 9/23/88 | IC | <5.00E+02 |
| Nitrate | 50470 | 10/10/88 | IC | 8.70E+02 |
| Nitrate | 50478 | 10/24/88 | IC | 8.00E+02 |
| Nitrate | 50490 | 11/04/88 | IC | 6.00E+02 |
| Nitrate | 50502 | 12/02/88 | IC | <5.00E+02 |
| Nitrate | 50512 | 12/16/88 | IC | 1.00E+03 |
| Nitrate | 50514 | 12/16/88 | IC | 1.90E+03 |
| Nitrate | 50534 | 2/15/89 | IC | 1.00E+03 |
| Nitrate | 50542 | 3/02/89 | IC | 6.00E+02 |
| Nitrate | 50558 | 3/15/89 | IC | 1.00E+03 |
| Nitrate | 50572 | 3/29/89 | IC | 9.00E+02 |
| Nitrate | 50596 | 4/12/89 | IC | <5.00E+02 |
| Nitrate | 50804 | 11/28/89 | IC | <5.00E+02 |
| Nitrate | 50014 | 9/11/85 | IC | 6.30E+02 |
| Nitrate | 50456 | 9/16/88 | IC | 2.07E+03 |
| Nitrate | 50462 | 9/23/88 | IC | 6.64E+02 |
| Nitrate | 50468 | 10/10/88 | IC | <5.00E+02 |
| Nitrate | 50476 | 10/24/88 | IC | <5.00E+02 |
| Nitrate | 50488 | 11/04/88 | IC | 2.10E+03 |
| Nitrate | 50498 | 11/18/88 | IC | 1.50E+03 |
| Nitrate | 50500 | 12/02/88 | IC | <5.00E+02 |
| Nitrate | 50532 | 2/15/89 | IC | 1.20E+03 |
| Nitrate | 50544 | 3/02/89 | IC | 6.00E+02 |
| Nitrate | 50556 | 3/15/89 | IC | <5.00E+02 |
| Nitrate | 50570 | 3/29/89 | IC | 6.00E+02 |
| Nitrate | 50593 | 4/11/89 | IC | <5.00E+02 |
| Nitrate | 50661 | 10/09/89 | IC | <5.00E+02 |
| Nitrate | 50673 | 10/11/89 | IC | <5.00E+02 |
| Nitrate | 50071 | 6/19/86 | IC | <5.00E+02 |
| Nitrate | 50085 | 7/07/86 | IC | 1.56E+03 |
| Nitrate | 51079 | 3/21/90 | IC | 8.00E+02 |
| Potassium | 50053 | 5/31/86 | ICP | 1.37E+03 |

Table B-2. Total Data.
(sheet 15 of 49)

| Constituent | Sample # | Date | Method | Result |
|---|---|---|---|---|
| Potassium | 50113 | 8/18/86 | ICP | 1.01E+03 |
| Potassium | 50149 | 10/03/86 | ICP | 8.88E+02 |
| Potassium | 50214 | 1/06/87 | ICP | 1.10E+03 |
| Potassium | 50454 | 9/16/88 | ICP | 7.35E+02 |
| Potassium | 50460 | 9/23/88 | ICP | 6.44E+02 |
| Potassium | 50470 | 10/10/88 | ICP | 1.04E+03 |
| Potassium | 50478 | 10/24/88 | ICP | 6.70E+02 |
| Potassium | 50490 | 11/04/88 | ICP | 6.79E+02 |
| Potassium | 50502 | 12/02/88 | ICP | 4.94E+02 |
| Potassium | 50512 | 12/16/88 | ICP | 5.90E+02 |
| Potassium | 50514 | 12/16/88 | ICP | 6.37E+02 |
| Potassium | 50534 | 2/15/89 | ICP | 5.36E+02 |
| Potassium | 50542 | 3/02/89 | ICP | 5.56E+02 |
| Potassium | 50558 | 3/15/89 | ICP | 6.63E+02 |
| Potassium | 50572 | 3/29/89 | ICP | 9.13E+02 |
| Potassium | 50596 | 4/12/89 | ICP | 8.15E+02 |
| Potassium | 50804 | 11/28/89 | ICP | 6.93E+02 |
| Potassium | 50014 | 9/11/85 | ICP | 9.58E+02 |
| Potassium | 50456 | 9/16/88 | ICP | 7.51E+02 |
| Potassium | 50462 | 9/23/88 | ICP | 7.59E+02 |
| Potassium | 50468 | 10/10/88 | ICP | 7.97E+02 |
| Potassium | 50476 | 10/24/88 | ICP | 6.15E+02 |
| Potassium | 50488 | 11/04/88 | ICP | 6.62E+02 |
| Potassium | 50498 | 11/18/88 | ICP | 5.81E+02 |
| Potassium | 50500 | 12/02/88 | ICP | 5.16E+02 |
| Potassium | 50532 | 2/15/89 | ICP | 4.89E+02 |
| Potassium | 50544 | 3/02/89 | ICP | 5.61E+02 |
| Potassium | 50556 | 3/15/89 | ICP | 6.38E+02 |
| Potassium | 50570 | 3/29/89 | ICP | 9.53E+02 |
| Potassium | 50593 | 4/11/89 | ICP | 8.12E+02 |
| Potassium | 50661 | 10/09/89 | ICP | 8.56E+02 |
| Potassium | 50673 | 10/11/89 | ICP | 8.43E+02 |
| Potassium | 50071 | 6/19/86 | ICP | 8.47E+02 |
| Potassium | 50085 | 7/07/86 | ICP | 8.52E+02 |
| Potassium | 51079 | 3/21/90 | ICP | 6.64E+02 |
| Selenium (EP Toxic) | 50558E | 3/15/89 | ICP | <5.00E+01 |
| Selenium (EP Toxic) | 50572E | 3/29/89 | ICP | <5.00E+01 |
| Selenium (EP Toxic) | 50596E | 4/12/89 | ICP | <5.00E+01 |
| Selenium (EP Toxic) | 50804E | 11/28/89 | ICP | <5.00E+02 |
| Selenium (EP Toxic) | 50556E | 3/15/89 | ICP | <5.00E+01 |
| Selenium (EP Toxic) | 50570E | 3/29/89 | ICP | <5.00E+01 |
| Selenium (EP Toxic) | 50593E | 4/11/89 | ICP | <5.00E+01 |
| Selenium (EP Toxic) | 50661E | 10/09/89 | ICP | <5.00E+02 |
| Selenium (EP Toxic) | 50673E | 10/11/89 | ICP | <5.00E+02 |
| Selenium (EP Toxic) | 51079E | 3/21/90 | ICP | <5.00E+02 |
| Silicon | 50534 | 2/15/89 | ICP | 1.40E+03 |

Table B-2. Total Data.
(sheet 16 of 49)

| Constituent | Sample # | Date | Method | Result |
|---|---|---|---|---|
| Silicon | 50542 | 3/02/89 | ICP | 1.37E+03 |
| Silicon | 50558 | 3/15/89 | ICP | 1.46E+03 |
| Silicon | 50572 | 3/29/89 | ICP | 1.85E+03 |
| Silicon | 50596 | 4/12/89 | ICP | 1.56E+03 |
| Silicon | 50804 | 11/28/89 | ICP | 1.94E+03 |
| Silicon | 50532 | 2/15/89 | ICP | 1.28E+03 |
| Silicon | 50544 | 3/02/89 | ICP | 1.43E+03 |
| Silicon | 50556 | 3/15/89 | ICP | 1.45E+03 |
| Silicon | 50570 | 3/29/89 | ICP | 1.92E+03 |
| Silicon | 50593 | 4/11/89 | ICP | 1.49E+03 |
| Silicon | 50661 | 10/09/89 | ICP | 2.05E+03 |
| Silicon | 50673 | 10/11/89 | ICP | 2.06E+03 |
| Silicon | 51079 | 3/21/90 | ICP | 1.74E+03 |
| Silver (EP Toxic) | 50558E | 3/15/89 | ICP | <5.00E+01 |
| Silver (EP Toxic) | 50572E | 3/29/89 | ICP | <5.00E+01 |
| Silver (EP Toxic) | 50596E | 4/12/89 | ICP | <5.00E+01 |
| Silver (EP Toxic) | 50804E | 11/28/89 | ICP | <5.00E+02 |
| Silver (EP Toxic) | 50556E | 3/15/89 | ICP | <5.00E+01 |
| Silver (EP Toxic) | 50570E | 3/29/89 | ICP | <5.00E+01 |
| Silver (EP Toxic) | 50593E | 4/11/89 | ICP | <5.00E+01 |
| Silver (EP Toxic) | 50661E | 10/09/89 | ICP | <5.00E+02 |
| Silver (EP Toxic) | 50673E | 10/11/89 | ICP | <5.00E+02 |
| Silver (EP Toxic) | 51079E | 3/21/90 | ICP | <5.00E+02 |
| Sodium | 50053 | 5/31/86 | ICP | 2.88E+03 |
| Sodium | 50113 | 8/18/86 | ICP | 2.78E+03 |
| Sodium | 50149 | 10/03/86 | ICP | 2.57E+03 |
| Sodium | 50214 | 1/06/87 | ICP | 2.60E+03 |
| Sodium | 50454 | 9/16/88 | ICP | 2.40E+03 |
| Sodium | 50460 | 9/23/88 | ICP | 2.11E+03 |
| Sodium | 50470 | 10/10/88 | ICP | 3.11E+03 |
| Sodium | 50478 | 10/24/88 | ICP | 2.56E+03 |
| Sodium | 50490 | 11/04/88 | ICP | 1.94E+03 |
| Sodium | 50502 | 12/02/88 | ICP | 1.18E+03 |
| Sodium | 50512 | 12/16/88 | ICP | 1.52E+03 |
| Sodium | 50514 | 12/16/88 | ICP | 1.65E+03 |
| Sodium | 50534 | 2/15/89 | ICP | 1.29E+03 |
| Sodium | 50542 | 3/02/89 | ICP | 1.53E+03 |
| Sodium | 50558 | 3/15/89 | ICP | 1.76E+03 |
| Sodium | 50572 | 3/29/89 | ICP | 2.74E+03 |
| Sodium | 50596 | 4/12/89 | ICP | 2.29E+03 |
| Sodium | 50804 | 11/28/89 | ICP | 1.82E+03 |
| Sodium | 50014 | 9/11/85 | ICP | 2.64E+03 |
| Sodium | 50456 | 9/16/88 | ICP | 2.35E+03 |
| Sodium | 50462 | 9/23/88 | ICP | 2.21E+03 |
| Sodium | 50468 | 10/10/88 | ICP | 2.02E+03 |
| Sodium | 50476 | 10/24/88 | ICP | 1.74E+03 |

Table B-2. Total Data.
(sheet 17 of 49)

| Constituent | Sample # | Date | Method | Result |
|---|---|---|---|---|
| Sodium | 50488 | 11/04/88 | ICP | 1.99E+03 |
| Sodium | 50498 | 11/18/88 | ICP | 4.65E+03 |
| Sodium | 50500 | 12/02/88 | ICP | 1.28E+03 |
| Sodium | 50532 | 2/15/89 | ICP | 1.83E+03 |
| Sodium | 50544 | 3/02/89 | ICP | 1.67E+03 |
| Sodium | 50556 | 3/15/89 | ICP | 1.69E+03 |
| Sodium | 50570 | 3/29/89 | ICP | 2.32E+03 |
| Sodium | 50593 | 4/11/89 | ICP | 2.25E+03 |
| Sodium | 50661 | 10/09/89 | ICP | 2.55E+03 |
| Sodium | 50673 | 10/11/89 | ICP | 2.32E+03 |
| Sodium | 50071 | 6/19/86 | ICP | 4.64E+03 |
| Sodium | 50085 | 7/07/86 | ICP | 2.92E+03 |
| Sodium | 51079 | 3/21/90 | ICP | 1.83E+03 |
| Strontium | 50053 | 5/31/86 | ICP | <3.00E+02 |
| Strontium | 50113 | 8/18/86 | ICP | <3.00E+02 |
| Strontium | 50149 | 10/03/86 | ICP | <3.00E+02 |
| Strontium | 50214 | 1/06/87 | ICP | <3.00E+02 |
| Strontium | 50454 | 9/16/88 | ICP | 1.05E+02 |
| Strontium | 50460 | 9/23/88 | ICP | 9.90E+01 |
| Strontium | 50470 | 10/10/88 | ICP | 1.30E+02 |
| Strontium | 50478 | 10/24/88 | ICP | 9.70E+01 |
| Strontium | 50490 | 11/04/88 | ICP | 9.30E+01 |
| Strontium | 50502 | 12/02/88 | ICP | 6.70E+01 |
| Strontium | 50512 | 12/16/88 | ICP | 7.10E+01 |
| Strontium | 50514 | 12/16/88 | ICP | 7.40E+01 |
| Strontium | 50534 | 2/15/89 | ICP | 7.60E+01 |
| Strontium | 50542 | 3/02/89 | ICP | 8.50E+01 |
| Strontium | 50558 | 3/15/89 | ICP | 9.40E+01 |
| Strontium | 50572 | 3/29/89 | ICP | 1.01E+02 |
| Strontium | 50596 | 4/12/89 | ICP | 1.10E+02 |
| Strontium | 50804 | 11/28/89 | ICP | 7.80E+01 |
| Strontium | 50014 | 9/11/85 | ICP | <3.00E+02 |
| Strontium | 50456 | 9/16/88 | ICP | 1.05E+02 |
| Strontium | 50462 | 9/23/88 | ICP | 1.12E+02 |
| Strontium | 50468 | 10/10/88 | ICP | 1.03E+02 |
| Strontium | 50476 | 10/24/88 | ICP | 9.30E+01 |
| Strontium | 50488 | 11/04/88 | ICP | 8.90E+01 |
| Strontium | 50498 | 11/18/88 | ICP | 7.40E+01 |
| Strontium | 50500 | 12/02/88 | ICP | 7.10E+01 |
| Strontium | 50532 | 2/15/89 | ICP | 7.00E+01 |
| Strontium | 50544 | 3/02/89 | ICP | 8.90E+01 |
| Strontium | 50556 | 3/15/89 | ICP | 9.40E+01 |
| Strontium | 50570 | 3/29/89 | ICP | 1.04E+02 |
| Strontium | 50593 | 4/11/89 | ICP | 1.08E+02 |
| Strontium | 50661 | 10/09/89 | ICP | 1.07E+02 |
| Strontium | 50673 | 10/11/89 | ICP | 9.80E+01 |

Table B-2. Total Data.
(sheet 18 of 49)

| Constituent | Sample # | Date | Method | Result |
|---|---|---|---|---|
| Strontium | 50071 | 6/19/86 | ICP | <3.00E+02 |
| Strontium | 50085 | 7/07/86 | ICP | <3.00E+02 |
| Strontium | 51079 | 3/21/90 | ICP | 8.30E+01 |
| Sulfate | 50053 | 5/31/86 | IC | 1.57E+04 |
| Sulfate | 50113 | 8/18/86 | IC | 1.26E+04 |
| Sulfate | 50149 | 10/03/86 | IC | 1.31E+04 |
| Sulfate | 50214 | 1/06/87 | IC | 1.25E+04 |
| Sulfate | 50454 | 9/16/88 | IC | 1.72E+04 |
| Sulfate | 50460 | 9/23/88 | IC | 1.44E+04 |
| Sulfate | 50470 | 10/10/88 | IC | 1.55E+04 |
| Sulfate | 50478 | 10/24/88 | IC | 1.43E+04 |
| Sulfate | 50490 | 11/04/88 | IC | 1.47E+04 |
| Sulfate | 50502 | 12/02/88 | IC | 1.21E+04 |
| Sulfate | 50512 | 12/16/88 | IC | 1.21E+04 |
| Sulfate | 50514 | 12/16/88 | IC | 1.28E+04 |
| Sulfate | 50534 | 2/15/89 | IC | 1.33E+04 |
| Sulfate | 50542 | 3/02/89 | IC | 1.27E+04 |
| Sulfate | 50558 | 3/15/89 | IC | 1.49E+04 |
| Sulfate | 50572 | 3/29/89 | IC | 1.75E+04 |
| Sulfate | 50596 | 4/12/89 | IC | 1.90E+04 |
| Sulfate | 50804 | 11/28/89 | IC | 1.06E+04 |
| Sulfate | 50014 | 9/11/85 | IC | 2.03E+04 |
| Sulfate | 50456 | 9/16/88 | IC | 1.66E+04 |
| Sulfate | 50462 | 9/23/88 | IC | 1.46E+04 |
| Sulfate | 50468 | 10/10/88 | IC | 1.52E+04 |
| Sulfate | 50476 | 10/24/88 | IC | 1.41E+04 |
| Sulfate | 50488 | 11/04/88 | IC | 1.46E+04 |
| Sulfate | 50498 | 11/18/88 | IC | 1.20E+04 |
| Sulfate | 50500 | 12/02/88 | IC | 1.24E+04 |
| Sulfate | 50532 | 2/15/89 | IC | 1.26E+04 |
| Sulfate | 50544 | 3/02/89 | IC | 1.25E+04 |
| Sulfate | 50556 | 3/15/89 | IC | 1.39E+04 |
| Sulfate | 50570 | 3/29/89 | IC | 1.78E+04 |
| Sulfate | 50593 | 4/11/89 | IC | 1.81E+04 |
| Sulfate | 50661 | 10/09/89 | IC | 1.48E+04 |
| Sulfate | 50673 | 10/11/89 | IC | 1.49E+04 |
| Sulfate | 50071 | 6/19/86 | IC | 1.16E+04 |
| Sulfate | 50085 | 7/07/86 | IC | 1.04E+04 |
| Sulfate | 51079 | 3/21/90 | IC | 1.20E+04 |
| Uranium | 50053 | 5/31/86 | FLUOR | 7.09E-01 |
| Uranium | 50113 | 8/18/86 | FLUOR | 6.09E-01 |
| Uranium | 50149 | 10/03/86 | FLUOR | 7.43E-01 |
| Uranium | 50214 | 1/06/87 | FLUOR | 2.50E-01 |
| Uranium | 50454 | 9/16/88 | FLUOR | 8.06E-01 |
| Uranium | 50460 | 9/23/88 | FLUOR | 4.46E-01 |
| Uranium | 50470 | 10/10/88 | FLUOR | 9.38E-01 |

Table B-2. Total Data.
(sheet 19 of 49)

| Constituent | Sample # | Date | Method | Result |
|---|---|---|---|---|
| Uranium | 50478 | 10/24/88 | FLUOR | 3.20E-01 |
| Uranium | 50490 | 11/04/88 | FLUOR | 6.24E-01 |
| Uranium | 50502 | 12/02/88 | FLUOR | <1.50E-01 |
| Uranium | 50512 | 12/16/88 | FLUOR | 4.01E-01 |
| Uranium | 50514 | 12/16/88 | FLUOR | 3.76E-01 |
| Uranium | 50534 | 2/15/89 | FLUOR | 5.00E-01 |
| Uranium | 50542 | 3/02/89 | FLUOR | 4.05E-01 |
| Uranium | 50558 | 3/15/89 | FLUOR | 7.31E-01 |
| Uranium | 50572 | 3/29/89 | FLUOR | 4.21E-01 |
| Uranium | 50596 | 4/12/89 | FLUOR | 3.06E-01 |
| Uranium | 50804 | 11/28/89 | FLUOR | 3.46E-01 |
| Uranium | 50014 | 9/11/85 | FLUOR | 3.27E-01 |
| Uranium | 50456 | 9/16/88 | FLUOR | 9.79E-01 |
| Uranium | 50462 | 9/23/88 | FLUOR | 1.29E+00 |
| Uranium | 50468 | 10/10/88 | FLUOR | 6.10E-01 |
| Uranium | 50476 | 10/24/88 | FLUOR | 3.50E-01 |
| Uranium | 50488 | 11/04/88 | FLUOR | 1.14E+00 |
| Uranium | 50498 | 11/18/88 | FLUOR | 4.54E-01 |
| Uranium | 50500 | 12/02/88 | FLUOR | <5.02E-02 |
| Uranium | 50532 | 2/15/89 | FLUOR | 2.37E-01 |
| Uranium | 50544 | 3/02/89 | FLUOR | 2.61E-01 |
| Uranium | 50556 | 3/15/89 | FLUOR | 2.57E-01 |
| Uranium | 50570 | 3/29/89 | FLUOR | 2.46E-01 |
| Uranium | 50593 | 4/11/89 | FLUOR | 3.79E-01 |
| Uranium | 50661 | 10/09/89 | FLUOR | 9.58E-01 |
| Uranium | 50673 | 10/11/89 | FLUOR | 4.81E-01 |
| Uranium | 50071 | 6/19/86 | FLUOR | 3.97E-01 |
| Uranium | 50085 | 7/07/86 | FLUOR | 5.24E-01 |
| Uranium | 51079 | 3/21/90 | FLUOR | 3.11E-01 |
| Vanadium | 50053 | 5/31/86 | ICP | <5.00E+00 |
| Vanadium | 50113 | 8/18/86 | ICP | <5.00E+00 |
| Vanadium | 50149 | 10/03/86 | ICP | <5.00E+00 |
| Vanadium | 50214 | 1/06/87 | ICP | <5.00E+00 |
| Vanadium | 50454 | 9/16/88 | ICP | <5.00E+00 |
| Vanadium | 50460 | 9/23/88 | ICP | <5.00E+00 |
| Vanadium | 50470 | 10/10/88 | ICP | 6.00E+00 |
| Vanadium | 50478 | 10/24/88 | ICP | <5.00E+00 |
| Vanadium | 50490 | 11/04/88 | ICP | <5.00E+00 |
| Vanadium | 50502 | 12/02/88 | ICP | <5.00E+00 |
| Vanadium | 50512 | 12/16/88 | ICP | <5.00E+00 |
| Vanadium | 50514 | 12/16/88 | ICP | <5.00E+00 |
| Vanadium | 50534 | 2/15/89 | ICP | <5.00E+00 |
| Vanadium | 50542 | 3/02/89 | ICP | <5.00E+00 |
| Vanadium | 50558 | 3/15/89 | ICP | <5.00E+00 |
| Vanadium | 50572 | 3/29/89 | ICP | <5.00E+00 |
| Vanadium | 50596 | 4/12/89 | ICP | <5.00E+00 |

Table B-2. Total Data.
(sheet 20 of 49)

| Constituent | Sample # | Date | Method | Result |
|---|---|---|---|---|
| Vanadium | 50804 | 11/28/89 | ICP | <5.00E+00 |
| Vanadium | 50014 | 9/11/85 | ICP | 2.20E+01 |
| Vanadium | 50456 | 9/16/88 | ICP | <5.00E+00 |
| Vanadium | 50462 | 9/23/88 | ICP | <5.00E+00 |
| Vanadium | 50468 | 10/10/88 | ICP | <5.00E+00 |
| Vanadium | 50476 | 10/24/88 | ICP | <5.00E+00 |
| Vanadium | 50488 | 11/04/88 | ICP | <5.00E+00 |
| Vanadium | 50498 | 11/18/88 | ICP | <5.00E+00 |
| Vanadium | 50500 | 12/02/88 | ICP | <5.00E+00 |
| Vanadium | 50532 | 2/15/89 | ICP | <5.00E+00 |
| Vanadium | 50544 | 3/02/89 | ICP | <5.00E+00 |
| Vanadium | 50556 | 3/15/89 | ICP | <5.00E+00 |
| Vanadium | 50570 | 3/29/89 | ICP | <5.00E+00 |
| Vanadium | 50593 | 4/11/89 | ICP | <5.00E+00 |
| Vanadium | 50661 | 10/09/89 | ICP | 7.00E+00 |
| Vanadium | 50673 | 10/11/89 | ICP | <5.00E+00 |
| Vanadium | 50071 | 6/19/86 | ICP | <5.00E+00 |
| Vanadium | 50085 | 7/07/86 | ICP | <5.00E+00 |
| Vanadium | 51079 | 3/21/90 | ICP | <5.00E+00 |
| Zinc | 50053 | 5/31/86 | ICP | <5.00E+00 |
| Zinc | 50113 | 8/18/86 | ICP | 4.60E+01 |
| Zinc | 50149 | 10/03/86 | ICP | 2.10E+01 |
| Zinc | 50214 | 1/06/87 | ICP | 1.40E+01 |
| Zinc | 50454 | 9/16/88 | ICP | 2.10E+01 |
| Zinc | 50460 | 9/23/88 | ICP | 1.50E+01 |
| Zinc | 50470 | 10/10/88 | ICP | 2.50E+01 |
| Zinc | 50478 | 10/24/88 | ICP | 3.60E+01 |
| Zinc | 50490 | 11/04/88 | ICP | 2.20E+01 |
| Zinc | 50502 | 12/02/88 | ICP | 1.10E+01 |
| Zinc | 50512 | 12/16/88 | ICP | 1.80E+01 |
| Zinc | 50514 | 12/16/88 | ICP | 3.00E+01 |
| Zinc | 50534 | 2/15/89 | ICP | 1.40E+01 |
| Zinc | 50542 | 3/02/89 | ICP | 2.00E+01 |
| Zinc | 50558 | 3/15/89 | ICP | 2.10E+01 |
| Zinc | 50572 | 3/29/89 | ICP | 2.20E+01 |
| Zinc | 50596 | 4/12/89 | ICP | 1.40E+01 |
| Zinc | 50804 | 11/28/89 | ICP | <5.00E+00 |
| Zinc | 50014 | 9/11/85 | ICP | 6.80E+01 |
| Zinc | 50456 | 9/16/88 | ICP | 1.80E+01 |
| Zinc | 50462 | 9/23/88 | ICP | 1.50E+01 |
| Zinc | 50468 | 10/10/88 | ICP | 8.00E+00 |
| Zinc | 50476 | 10/24/88 | ICP | 2.20E+01 |
| Zinc | 50488 | 11/04/88 | ICP | 2.70E+01 |
| Zinc | 50498 | 11/18/88 | ICP | 1.80E+01 |
| Zinc | 50500 | 12/02/88 | ICP | 2.00E+01 |
| Zinc | 50532 | 2/15/89 | ICP | 1.80E+01 |

Table B-2. Total Data.
(sheet 21 of 49)

| Constituent | Sample # | Date | Method | Result |
|---|---|---|---|---|
| Zinc | 50544 | 3/02/89 | ICP | 1.70E+01 |
| Zinc | 50556 | 3/15/89 | ICP | 2.10E+01 |
| Zinc | 50570 | 3/29/89 | ICP | 6.00E+00 |
| Zinc | 50593 | 4/11/89 | ICP | 3.70E+01 |
| Zinc | 50661 | 10/09/89 | ICP | 1.80E+01 |
| Zinc | 50673 | 10/11/89 | ICP | 2.30E+01 |
| Zinc | 50071 | 6/19/86 | ICP | 1.18E+02 |
| Zinc | 50085 | 7/07/86 | ICP | 1.06E+02 |
| Zinc | 51079 | 3/21/90 | ICP | 1.50E+01 |
| Acetone | 50149 | 10/03/86 | VOA | 6.00E+01 |
| Acetone | 50454 | 9/16/88 | VOA | 7.00E+00 |
| Acetone | 50502 | 12/02/88 | VOA | 5.70E+01 |
| Acetone | 50502B | 12/02/88 | VOA | 8.00E+00 |
| Acetone | 50512 | 12/16/88 | VOA | 1.00E+01 |
| Acetone | 50512B | 12/16/88 | VOA | 2.12E+02 |
| Acetone | 50514 | 12/16/88 | VOA | 8.00E+00 |
| Acetone | 50514B | 12/16/88 | VOA | 1.00E+01 |
| Acetone | 50534 | 2/15/89 | VOA | 1.10E+01 |
| Acetone | 50534 | 2/15/89 | ABN | <1.00E+01 |
| Acetone | 50534B | 2/15/89 | VOA | 1.00E+01 |
| Acetone | 50542 | 3/02/89 | VOA | <8.00E+00 |
| Acetone | 50542 | 3/02/89 | ABN | <1.00E+01 |
| Acetone | 50542B | 3/02/89 | VOA | <1.00E+01 |
| Acetone | 50558 | 3/15/89 | VOA | 3.50E+01 |
| Acetone | 50558 | 3/15/89 | ABN | <1.00E+01 |
| Acetone | 50558B | 3/15/89 | VOA | <6.00E+00 |
| Acetone | 50572 | 3/29/89 | VOA | <9.00E+00 |
| Acetone | 50572 | 3/29/89 | ABN | <1.00E+01 |
| Acetone | 50572B | 3/29/89 | VOA | 1.30E+01 |
| Acetone | 50596 | 4/12/89 | VOA | <6.00E+00 |
| Acetone | 50596 | 4/12/89 | ABN | <1.00E+01 |
| Acetone | 50596B | 4/12/89 | VOA | <1.00E+01 |
| Acetone | 50804 | 11/28/89 | VOA | 1.40E+01 |
| Acetone | 50804 | 11/28/89 | ABN | <1.00E+01 |
| Acetone | 50804B | 11/28/89 | VOA | <1.00E+01 |
| Acetone | 50804T | 11/28/89 | VOA | <1.00E+01 |
| Acetone | 50488 | 11/04/88 | VOA | 1.20E+01 |
| Acetone | 50498 | 11/18/88 | VOA | 1.30E+01 |
| Acetone | 50500 | 12/02/88 | VOA | 3.50E+01 |
| Acetone | 50532 | 2/15/89 | VOA | 1.30E+01 |
| Acetone | 50532 | 2/15/89 | ABN | <1.00E+01 |
| Acetone | 50532B | 2/15/89 | VOA | <5.00E+00 |
| Acetone | 50544 | 3/02/89 | VOA | 1.20E+01 |
| Acetone | 50544 | 3/02/89 | ABN | <1.00E+01 |
| Acetone | 50544B | 3/02/89 | VOA | <5.00E+00 |
| Acetone | 50556 | 3/15/89 | VOA | <8.00E+00 |

Table B-2. Total Data.
(sheet 22 of 49)

| Constituent | Sample # | Date | Method | Result |
|---|---|---|---|---|
| Acetone | 50556 | 3/15/89 | ABN | <1.00E+01 |
| Acetone | 50556B | 3/15/89 | VOA | <6.00E+00 |
| Acetone | 50570 | 3/29/89 | VOA | 1.90E+01 |
| Acetone | 50570 | 3/29/89 | ABN | <1.00E+01 |
| Acetone | 50570B | 3/29/89 | VOA | <5.00E+00 |
| Acetone | 50593 | 4/11/89 | VOA | <6.00E+00 |
| Acetone | 50593 | 4/11/89 | ABN | <1.00E+01 |
| Acetone | 50593B | 4/11/89 | VOA | <1.00E+01 |
| Acetone | 50661 | 10/09/89 | VOA | <1.00E+01 |
| Acetone | 50661 | 10/09/89 | ABN | <1.00E+01 |
| Acetone | 50661B | 10/09/89 | VOA | <1.00E+01 |
| Acetone | 50661T | 10/09/89 | VOA | <1.00E+01 |
| Acetone | 50673 | 10/11/89 | VOA | <1.00E+01 |
| Acetone | 50673 | 10/11/89 | ABN | <1.00E+01 |
| Acetone | 50673B | 10/11/89 | VOA | <8.00E+00 |
| Acetone | 50673T | 10/11/89 | VOA | <1.00E+01 |
| Acetone | 51079 | 3/21/90 | VOA | <7.00E+00 |
| Acetone | 51079 | 3/21/90 | ABN | <1.00E+01 |
| Acetone | 51079B | 3/21/90 | VOA | <1.00E+01 |
| Acetone | 51079T | 3/21/90 | VOA | <1.00E+01 |
| 2-Acetothiophene | 50071 | 6/19/86 | ABN | 1.00E+02 |
| Ammonia | 50053 | 5/31/86 | ISE | <5.00E+01 |
| Ammonia | 50113 | 8/18/86 | ISE | <5.00E+01 |
| Ammonia | 50149 | 10/03/86 | ISE | 3.90E+02 |
| Ammonia | 50214 | 1/06/87 | ISE | <5.00E+01 |
| Ammonia | 50454 | 9/16/88 | ISE | <5.00E+01 |
| Ammonia | 50460 | 9/23/88 | ISE | <5.00E+01 |
| Ammonia | 50470 | 10/10/88 | ISE | <5.00E+01 |
| Ammonia | 50478 | 10/24/88 | ISE | <5.00E+01 |
| Ammonia | 50490 | 11/04/88 | ISE | <5.00E+01 |
| Ammonia | 50502 | 12/02/88 | ISE | <5.00E+01 |
| Ammonia | 50512 | 12/16/88 | ISE | 5.60E+01 |
| Ammonia | 50514 | 12/16/88 | ISE | 5.20E+01 |
| Ammonia | 50534 | 2/15/89 | ISE | <5.00E+01 |
| Ammonia | 50542 | 3/02/89 | ISE | <5.00E+01 |
| Ammonia | 50558 | 3/15/89 | ISE | 1.05E+03 |
| Ammonia | 50572 | 3/29/89 | ISE | <5.00E+01 |
| Ammonia | 50596 | 4/12/89 | ISE | <5.00E+01 |
| Ammonia | 50804 | 11/28/89 | ISE | <5.00E+01 |
| Ammonia | 50014 | 9/11/85 | ISE | 2.50E+02 |
| Ammonia | 50456 | 9/16/88 | ISE | <5.00E+01 |
| Ammonia | 50462 | 9/23/88 | ISE | <5.00E+01 |
| Ammonia | 50468 | 10/10/88 | ISE | <5.00E+01 |
| Ammonia | 50476 | 10/24/88 | ISE | <5.00E+01 |
| Ammonia | 50488 | 11/04/88 | ISE | <5.00E+01 |
| Ammonia | 50498 | 11/18/88 | ISE | <5.00E+01 |

Table B-2. Total Data.
(sheet 23 of 49)

| Constituent | Sample # | Date | Method | Result |
|---|---|---|---|---|
| Ammonia | 50500 | 12/02/88 | ISE | <5.00E+01 |
| Ammonia | 50532 | 2/15/89 | ISE | 2.70E+02 |
| Ammonia | 50544 | 3/02/89 | ISE | <5.00E+01 |
| Ammonia | 50556 | 3/15/89 | ISE | 6.00E+01 |
| Ammonia | 50570 | 3/29/89 | ISE | <5.00E+01 |
| Ammonia | 50593 | 4/11/89 | ISE | <5.00E+01 |
| Ammonia | 50661 | 10/09/89 | ISE | 9.10E+01 |
| Ammonia | 50673 | 10/11/89 | ISE | 7.80E+01 |
| Ammonia | 50071 | 6/19/86 | ISE | 5.01E+01 |
| Ammonia | 50085 | 7/07/86 | ISE | 6.26E+02 |
| Ammonia | 51079 | 3/21/90 | ISE | <5.00E+01 |
| Benzene | 50053 | 5/31/86 | VOA | <1.00E+01 |
| Benzene | 50113 | 8/18/86 | VOA | <1.00E+01 |
| Benzene | 50113B | 8/18/86 | VOA | <1.00E+01 |
| Benzene | 50149 | 10/03/86 | VOA | <1.00E+01 |
| Benzene | 50149B | 10/03/86 | VOA | <1.00E+01 |
| Benzene | 50214 | 1/06/87 | VOA | <1.00E+01 |
| Benzene | 50214B | 1/06/87 | VOA | <1.00E+01 |
| Benzene | 50454 | 9/16/88 | VOA | <5.00E+00 |
| Benzene | 50454B | 9/16/88 | VOA | <5.00E+00 |
| Benzene | 50460 | 9/23/88 | VOA | <5.00E+00 |
| Benzene | 50460B | 9/23/88 | VOA | <5.00E+00 |
| Benzene | 50470 | 10/10/88 | VOA | <5.00E+00 |
| Benzene | 50470B | 10/10/88 | VOA | <5.00E+00 |
| Benzene | 50478 | 10/24/88 | VOA | <5.00E+00 |
| Benzene | 50478B | 10/24/88 | VOA | <5.00E+00 |
| Benzene | 50490 | 11/04/88 | VOA | <5.00E+00 |
| Benzene | 50490B | 11/04/88 | VOA | <5.00E+00 |
| Benzene | 50502 | 12/02/88 | VOA | <5.00E+00 |
| Benzene | 50502B | 12/02/88 | VOA | <5.00E+00 |
| Benzene | 50512 | 12/16/88 | VOA | <5.00E+00 |
| Benzene | 50512B | 12/16/88 | VOA | <5.00E+00 |
| Benzene | 50514 | 12/16/88 | VOA | <5.00E+00 |
| Benzene | 50514B | 12/16/88 | VOA | 2.10E+01 |
| Benzene | 50534 | 2/15/89 | VOA | <5.00E+00 |
| Benzene | 50534B | 2/15/89 | VOA | <5.00E+00 |
| Benzene | 50542 | 3/02/89 | VOA | <5.00E+00 |
| Benzene | 50542B | 3/02/89 | VOA | <5.00E+00 |
| Benzene | 50558 | 3/15/89 | VOA | <5.00E+00 |
| Benzene | 50558B | 3/15/89 | VOA | <5.00E+00 |
| Benzene | 50572 | 3/29/89 | VOA | <5.00E+00 |
| Benzene | 50572B | 3/29/89 | VOA | <5.00E+00 |
| Benzene | 50596 | 4/12/89 | VOA | <5.00E+00 |
| Benzene | 50596B | 4/12/89 | VOA | <5.00E+00 |
| Benzene | 50804 | 11/28/89 | VOA | <5.00E+00 |
| Benzene | 50804B | 11/28/89 | VOA | <5.00E+00 |

Table B-2. Total Data.
(sheet 24 of 49)

| Constituent | Sample # | Date | Method | Result |
|---|---|---|---|---|
| Benzene | 50804T | 11/28/89 | VOA | <5.00E+00 |
| Benzene | 50014 | 9/11/85 | VOA | <1.00E+01 |
| Benzene | 50456 | 9/16/88 | VOA | <5.00E+00 |
| Benzene | 50456B | 9/16/88 | VOA | <5.00E+00 |
| Benzene | 50462 | 9/23/88 | VOA | <5.00E+00 |
| Benzene | 50462B | 9/23/88 | VOA | <5.00E+00 |
| Benzene | 50468 | 10/10/88 | VOA | <5.00E+00 |
| Benzene | 50468B | 10/10/88 | VOA | <5.00E+00 |
| Benzene | 50476 | 10/24/88 | VOA | <5.00E+00 |
| Benzene | 50476B | 10/24/88 | VOA | <5.00E+00 |
| Benzene | 50488 | 11/04/88 | VOA | <5.00E+00 |
| Benzene | 50488B | 11/04/88 | VOA | <5.00E+00 |
| Benzene | 50498 | 11/18/88 | VOA | <5.00E+00 |
| Benzene | 50498B | 11/18/88 | VOA | <5.00E+00 |
| Benzene | 50500 | 12/02/88 | VOA | <5.00E+00 |
| Benzene | 50500B | 12/02/88 | VOA | <5.00E+00 |
| Benzene | 50532 | 2/15/89 | VOA | <5.00E+00 |
| Benzene | 50532B | 2/15/89 | VOA | <5.00E+00 |
| Benzene | 50544 | 3/02/89 | VOA | <5.00E+00 |
| Benzene | 50544B | 3/02/89 | VOA | <5.00E+00 |
| Benzene | 50556 | 3/15/89 | VOA | <5.00E+00 |
| Benzene | 50556B | 3/15/89 | VOA | <5.00E+00 |
| Benzene | 50570 | 3/29/89 | VOA | <5.00E+00 |
| Benzene | 50570B | 3/29/89 | VOA | <5.00E+00 |
| Benzene | 50593 | 4/11/89 | VOA | <5.00E+00 |
| Benzene | 50593B | 4/11/89 | VOA | <5.00E+00 |
| Benzene | 50661 | 10/09/89 | VOA | <5.00E+00 |
| Benzene | 50661B | 10/09/89 | VOA | <5.00E+00 |
| Benzene | 50661T | 10/09/89 | VOA | <5.00E+00 |
| Benzene | 50673 | 10/11/89 | VOA | <5.00E+00 |
| Benzene | 50673B | 10/11/89 | VOA | <5.00E+00 |
| Benzene | 50673T | 10/11/89 | VOA | <5.00E+00 |
| Benzene | 50071 | 6/19/86 | VOA | <1.00E+01 |
| Benzene | 50071B | 6/19/86 | VOA | <1.00E+01 |
| Benzene | 50085 | 7/07/86 | VOA | <1.00E+01 |
| Benzene | 50085B | 7/07/86 | VOA | <1.00E+01 |
| Benzene | 51079 | 3/21/90 | VOA | <5.00E+00 |
| Benzene | 51079B | 3/21/90 | VOA | <5.00E+00 |
| Benzene | 51079T | 3/21/90 | VOA | <5.00E+00 |
| Bis(2-ethylhexyl) phthalate | 50053 | 5/31/86 | ABN | <1.00E+01 |
| Bis(2-ethylhexyl) phthalate | 50113 | 8/18/86 | ABN | <1.00E+01 |
| Bis(2-ethylhexyl) phthalate | 50149 | 10/03/86 | ABN | <1.00E+01 |
| Bis(2-ethylhexyl) phthalate | 50214 | 1/06/87 | ABN | <1.00E+01 |
| Bis(2-ethylhexyl) phthalate | 50454 | 9/16/88 | ABN | <1.00E+01 |
| Bis(2-ethylhexyl) phthalate | 50460 | 9/23/88 | ABN | <1.00E+01 |
| Bis(2-ethylhexyl) phthalate | 50470 | 10/10/88 | ABN | <1.00E+01 |

Table B-2. Total Data.
(sheet 25 of 49)

| Constituent | Sample # | Date | Method | Result |
|---|---|---|---|---|
| Bis(2-ethylhexyl) phthalate | 50478 | 10/24/88 | ABN | <1.00E+01 |
| Bis(2-ethylhexyl) phthalate | 50490 | 11/04/88 | ABN | <1.00E+01 |
| Bis(2-ethylhexyl) phthalate | 50502 | 12/02/88 | ABN | <1.00E+01 |
| Bis(2-ethylhexyl) phthalate | 50512 | 12/16/88 | ABN | <1.00E+01 |
| Bis(2-ethylhexyl) phthalate | 50514 | 12/16/88 | ABN | <1.00E+01 |
| Bis(2-ethylhexyl) phthalate | 50534 | 2/15/89 | ABN | <1.00E+01 |
| Bis(2-ethylhexyl) phthalate | 50542 | 3/02/89 | ABN | <1.00E+01 |
| Bis(2-ethylhexyl) phthalate | 50558 | 3/15/89 | ABN | 1.20E+01 |
| Bis(2-ethylhexyl) phthalate | 50572 | 3/29/89 | ABN | <1.00E+01 |
| Bis(2-ethylhexyl) phthalate | 50596 | 4/12/89 | ABN | <1.00E+01 |
| Bis(2-ethylhexyl) phthalate | 50804 | 11/28/89 | ABN | <1.00E+01 |
| Bis(2-ethylhexyl) phthalate | 50014 | 9/11/85 | ABN | <1.00E+01 |
| Bis(2-ethylhexyl) phthalate | 50456 | 9/16/88 | ABN | <1.00E+01 |
| Bis(2-ethylhexyl) phthalate | 50462 | 9/23/88 | ABN | <1.00E+01 |
| Bis(2-ethylhexyl) phthalate | 50468 | 10/10/88 | ABN | <1.00E+01 |
| Bis(2-ethylhexyl) phthalate | 50476 | 10/24/88 | ABN | <1.00E+01 |
| Bis(2-ethylhexyl) phthalate | 50488 | 11/04/88 | ABN | <1.00E+01 |
| Bis(2-ethylhexyl) phthalate | 50498 | 11/18/88 | ABN | <1.00E+01 |
| Bis(2-ethylhexyl) phthalate | 50500 | 12/02/88 | ABN | <1.00E+01 |
| Bis(2-ethylhexyl) phthalate | 50532 | 2/15/89 | ABN | <1.00E+01 |
| Bis(2-ethylhexyl) phthalate | 50544 | 3/02/89 | ABN | <1.00E+01 |
| Bis(2-ethylhexyl) phthalate | 50556 | 3/15/89 | ABN | <1.00E+01 |
| Bis(2-ethylhexyl) phthalate | 50570 | 3/29/89 | ABN | <1.00E+01 |
| Bis(2-ethylhexyl) phthalate | 50593 | 4/11/89 | ABN | <1.00E+01 |
| Bis(2-ethylhexyl) phthalate | 50661 | 10/09/89 | ABN | <1.00E+01 |
| Bis(2-ethylhexyl) phthalate | 50673 | 10/11/89 | ABN | <1.00E+01 |
| Bis(2-ethylhexyl) phthalate | 50071 | 6/19/86 | ABN | <1.00E+01 |
| Bis(2-ethylhexyl) phthalate | 50085 | 7/07/86 | ABN | <1.00E+01 |
| Bis(2-ethylhexyl) phthalate | 51079 | 3/21/90 | ABN | <1.00E+01 |
| Chlorobenzene | 50053 | 5/31/86 | VOA | <1.00E+01 |
| Chlorobenzene | 50113 | 8/18/86 | VOA | <1.00E+01 |
| Chlorobenzene | 50113B | 8/18/86 | VOA | <1.00E+01 |
| Chlorobenzene | 50149 | 10/03/86 | VOA | <1.00E+01 |
| Chlorobenzene | 50149B | 10/03/86 | VOA | <1.00E+01 |
| Chlorobenzene | 50214 | 1/06/87 | VOA | <1.00E+01 |
| Chlorobenzene | 50214B | 1/06/87 | VOA | <1.00E+01 |
| Chlorobenzene | 50454 | 9/16/88 | VOA | <1.00E+01 |
| Chlorobenzene | 50454B | 9/16/88 | VOA | <1.00E+01 |
| Chlorobenzene | 50460 | 9/23/88 | VOA | <1.00E+01 |
| Chlorobenzene | 50460B | 9/23/88 | VOA | <1.00E+01 |
| Chlorobenzene | 50470 | 10/10/88 | VOA | <1.00E+01 |
| Chlorobenzene | 50470B | 10/10/88 | VOA | <1.00E+01 |
| Chlorobenzene | 50478 | 10/24/88 | VOA | <1.00E+01 |
| Chlorobenzene | 50478B | 10/24/88 | VOA | <1.00E+01 |
| Chlorobenzene | 50490 | 11/04/88 | VOA | <1.00E+01 |
| Chlorobenzene | 50490B | 11/04/88 | VOA | <1.00E+01 |

Table B-2. Total Data.
(sheet 26 of 49)

| Constituent | Sample # | Date | Method | Result |
|---|---|---|---|---|
| Chlorobenzene | 50502 | 12/02/88 | VOA | <1.00E+01 |
| Chlorobenzene | 50502B | 12/02/88 | VOA | <1.00E+01 |
| Chlorobenzene | 50512 | 12/16/88 | VOA | <1.00E+01 |
| Chlorobenzene | 50512B | 12/16/88 | VOA | <1.00E+01 |
| Chlorobenzene | 50514 | 12/16/88 | VOA | <1.00E+01 |
| Chlorobenzene | 50514B | 12/16/88 | VOA | 5.10E+01 |
| Chlorobenzene | 50534 | 2/15/89 | VOA | <5.00E+00 |
| Chlorobenzene | 50534 | 2/15/89 | ABN | <1.00E+01 |
| Chlorobenzene | 50534B | 2/15/89 | VOA | <5.00E+00 |
| Chlorobenzene | 50542 | 3/02/89 | VOA | <5.00E+00 |
| Chlorobenzene | 50542 | 3/02/89 | ABN | <1.00E+01 |
| Chlorobenzene | 50542B | 3/02/89 | VOA | <5.00E+00 |
| Chlorobenzene | 50558 | 3/15/89 | VOA | <5.00E+00 |
| Chlorobenzene | 50558 | 3/15/89 | ABN | <1.00E+01 |
| Chlorobenzene | 50558B | 3/15/89 | VOA | <5.00E+00 |
| Chlorobenzene | 50572 | 3/29/89 | VOA | <5.00E+00 |
| Chlorobenzene | 50572 | 3/29/89 | ABN | <1.00E+01 |
| Chlorobenzene | 50572B | 3/29/89 | VOA | <5.00E+00 |
| Chlorobenzene | 50596 | 4/12/89 | VOA | <5.00E+00 |
| Chlorobenzene | 50596 | 4/12/89 | ABN | <1.00E+01 |
| Chlorobenzene | 50596B | 4/12/89 | VOA | <5.00E+00 |
| Chlorobenzene | 50804 | 11/28/89 | VOA | <5.00E+00 |
| Chlorobenzene | 50804 | 11/28/89 | ABN | <1.00E+01 |
| Chlorobenzene | 50804B | 11/28/89 | VOA | <5.00E+00 |
| Chlorobenzene | 50804T | 11/28/89 | VOA | <5.00E+00 |
| Chlorobenzene | 50014 | 9/11/85 | VOA | <1.00E+01 |
| Chlorobenzene | 50456 | 9/16/88 | VOA | <1.00E+01 |
| Chlorobenzene | 50456B | 9/16/88 | VOA | <1.00E+01 |
| Chlorobenzene | 50462 | 9/23/88 | VOA | <1.00E+01 |
| Chlorobenzene | 50462B | 9/23/88 | VOA | <1.00E+01 |
| Chlorobenzene | 50468 | 10/10/88 | VOA | <1.00E+01 |
| Chlorobenzene | 50468B | 10/10/88 | VOA | <1.00E+01 |
| Chlorobenzene | 50476 | 10/24/88 | VOA | <1.00E+01 |
| Chlorobenzene | 50476B | 10/24/88 | VOA | <1.00E+01 |
| Chlorobenzene | 50488 | 11/04/88 | VOA | <1.00E+01 |
| Chlorobenzene | 50488B | 11/04/88 | VOA | <1.00E+01 |
| Chlorobenzene | 50498 | 11/18/88 | VOA | <1.00E+01 |
| Chlorobenzene | 50498B | 11/18/88 | VOA | <1.00E+01 |
| Chlorobenzene | 50500 | 12/02/88 | VOA | <1.00E+01 |
| Chlorobenzene | 50500B | 12/02/88 | VOA | <1.00E+01 |
| Chlorobenzene | 50532 | 2/15/89 | VOA | <5.00E+00 |
| Chlorobenzene | 50532 | 2/15/89 | ABN | <1.00E+01 |
| Chlorobenzene | 50532B | 2/15/89 | VOA | <5.00E+00 |
| Chlorobenzene | 50544 | 3/02/89 | VOA | <5.00E+00 |
| Chlorobenzene | 50544 | 3/02/89 | ABN | <1.00E+01 |
| Chlorobenzene | 50544B | 3/02/89 | VOA | <5.00E+00 |

Table B-2. Total Data.
(sheet 27 of 49)

| Constituent | Sample # | Date | Method | Result |
|---|---|---|---|---|
| Chlorobenzene | 50556 | 3/15/89 | VOA | <5.00E+00 |
| Chlorobenzene | 50556 | 3/15/89 | ABN | <1.00E+01 |
| Chlorobenzene | 50556B | 3/15/89 | VOA | <5.00E+00 |
| Chlorobenzene | 50570 | 3/29/89 | VOA | <5.00E+00 |
| Chlorobenzene | 50570 | 3/29/89 | ABN | <1.00E+01 |
| Chlorobenzene | 50570B | 3/29/89 | VOA | <5.00E+00 |
| Chlorobenzene | 50593 | 4/11/89 | VOA | <5.00E+00 |
| Chlorobenzene | 50593 | 4/11/89 | ABN | <1.00E+01 |
| Chlorobenzene | 50593B | 4/11/89 | VOA | <5.00E+00 |
| Chlorobenzene | 50661 | 10/09/89 | VOA | <5.00E+00 |
| Chlorobenzene | 50661 | 10/09/89 | ABN | <1.00E+01 |
| Chlorobenzene | 50661B | 10/09/89 | VOA | <5.00E+00 |
| Chlorobenzene | 50661T | 10/09/89 | VOA | <5.00E+00 |
| Chlorobenzene | 50673 | 10/11/89 | VOA | <5.00E+00 |
| Chlorobenzene | 50673 | 10/11/89 | ABN | <1.00E+01 |
| Chlorobenzene | 50673B | 10/11/89 | VOA | <5.00E+00 |
| Chlorobenzene | 50673T | 10/11/89 | VOA | <5.00E+00 |
| Chlorobenzene | 50071 | 6/19/86 | VOA | <1.00E+01 |
| Chlorobenzene | 50071B | 6/19/86 | VOA | <1.00E+01 |
| Chlorobenzene | 50085 | 7/07/86 | VOA | <1.00E+01 |
| Chlorobenzene | 50085B | 7/07/86 | VOA | <1.00E+01 |
| Chlorobenzene | 51079 | 3/21/90 | VOA | <5.00E+00 |
| Chlorobenzene | 51079 | 3/21/90 | ABN | <1.00E+01 |
| Chlorobenzene | 51079B | 3/21/90 | VOA | <5.00E+00 |
| Chlorobenzene | 51079T | 3/21/90 | VOA | <5.00E+00 |
| Chloroethane | 50514B | 12/16/88 | VOA | 4.20E+01 |
| Chloroethane | 50534 | 2/15/89 | VOA | <1.00E+01 |
| Chloroethane | 50534B | 2/15/89 | VOA | <1.00E+01 |
| Chloroethane | 50542 | 3/02/89 | VOA | <1.00E+01 |
| Chloroethane | 50542B | 3/02/89 | VOA | <1.00E+01 |
| Chloroethane | 50558 | 3/15/89 | VOA | <1.00E+01 |
| Chloroethane | 50558B | 3/15/89 | VOA | <1.00E+01 |
| Chloroethane | 50572 | 3/29/89 | VOA | <1.00E+01 |
| Chloroethane | 50572B | 3/29/89 | VOA | <1.00E+01 |
| Chloroethane | 50596 | 4/12/89 | VOA | <1.00E+01 |
| Chloroethane | 50596B | 4/12/89 | VOA | <1.00E+01 |
| Chloroethane | 50804 | 11/28/89 | VOA | <1.00E+01 |
| Chloroethane | 50804B | 11/28/89 | VOA | <1.00E+01 |
| Chloroethane | 50804T | 11/28/89 | VOA | <1.00E+01 |
| Chloroethane | 50532 | 2/15/89 | VOA | <1.00E+01 |
| Chloroethane | 50532B | 2/15/89 | VOA | <1.00E+01 |
| Chloroethane | 50544 | 3/02/89 | VOA | <1.00E+01 |
| Chloroethane | 50544B | 3/02/89 | VOA | <1.00E+01 |
| Chloroethane | 50556 | 3/15/89 | VOA | <1.00E+01 |
| Chloroethane | 50556B | 3/15/89 | VOA | <1.00E+01 |
| Chloroethane | 50570 | 3/29/89 | VOA | <1.00E+01 |

Table B-2. Total Data.
(sheet 28 of 49)

| Constituent | Sample # | Date | Method | Result |
|---|---|---|---|---|
| Chloroethane | 50570B | 3/29/89 | VOA | <1.00E+01 |
| Chloroethane | 50593 | 4/11/89 | VOA | <1.00E+01 |
| Chloroethane | 50593B | 4/11/89 | VOA | <1.00E+01 |
| Chloroethane | 50661 | 10/09/89 | VOA | <1.00E+01 |
| Chloroethane | 50661B | 10/09/89 | VOA | <1.00E+01 |
| Chloroethane | 50661T | 10/09/89 | VOA | <1.00E+01 |
| Chloroethane | 50673 | 10/11/89 | VOA | <1.00E+01 |
| Chloroethane | 50673B | 10/11/89 | VOA | <1.00E+01 |
| Chloroethane | 50673T | 10/11/89 | VOA | <1.00E+01 |
| Chloroethane | 51079 | 3/21/90 | VOA | <1.00E+01 |
| Chloroethane | 51079B | 3/21/90 | VOA | <1.00E+01 |
| Chloroethane | 51079T | 3/21/90 | VOA | <1.00E+01 |
| 1,2-Dichloroethene | 50053 | 5/31/86 | VOA | <1.00E+01 |
| 1,2-Dichloroethene | 50113 | 8/18/86 | VOA | <1.00E+01 |
| 1,2-Dichloroethene | 50113B | 8/18/86 | VOA | <1.00E+01 |
| 1,2-Dichloroethene | 50149 | 10/03/86 | VOA | <1.00E+01 |
| 1,2-Dichloroethene | 50149B | 10/03/86 | VOA | <1.00E+01 |
| 1,2-Dichloroethene | 50214 | 1/06/87 | VOA | <1.00E+01 |
| 1,2-Dichloroethene | 50214B | 1/06/87 | VOA | <1.00E+01 |
| 1,2-Dichloroethene | 50454 | 9/16/88 | VOA | <1.00E+01 |
| 1,2-Dichloroethene | 50454B | 9/16/88 | VOA | <1.00E+01 |
| 1,2-Dichloroethene | 50460 | 9/23/88 | VOA | <1.00E+01 |
| 1,2-Dichloroethene | 50460B | 9/23/88 | VOA | <1.00E+01 |
| 1,2-Dichloroethene | 50470 | 10/10/88 | VOA | <1.00E+01 |
| 1,2-Dichloroethene | 50470B | 10/10/88 | VOA | <1.00E+01 |
| 1,2-Dichloroethene | 50478 | 10/24/88 | VOA | <1.00E+01 |
| 1,2-Dichloroethene | 50478B | 10/24/88 | VOA | <1.00E+01 |
| 1,2-Dichloroethene | 50490 | 11/04/88 | VOA | <1.00E+01 |
| 1,2-Dichloroethene | 50490B | 11/04/88 | VOA | <1.00E+01 |
| 1,2-Dichloroethene | 50502 | 12/02/88 | VOA | <1.00E+01 |
| 1,2-Dichloroethene | 50502B | 12/02/88 | VOA | <1.00E+01 |
| 1,2-Dichloroethene | 50512 | 12/16/88 | VOA | <2.00E+00 |
| 1,2-Dichloroethene | 50512B | 12/16/88 | VOA | 1.60E+01 |
| 1,2-Dichloroethene | 50514 | 12/16/88 | VOA | <1.00E+01 |
| 1,2-Dichloroethene | 50514B | 12/16/88 | VOA | <1.00E+01 |
| 1,2-Dichloroethene | 50534 | 2/15/89 | VOA | <5.00E+00 |
| 1,2-Dichloroethene | 50534B | 2/15/89 | VOA | <5.00E+00 |
| 1,2-Dichloroethene | 50542 | 3/02/89 | VOA | <5.00E+00 |
| 1,2-Dichloroethene | 50542B | 3/02/89 | VOA | <5.00E+00 |
| 1,2-Dichloroethene | 50558 | 3/15/89 | VOA | <5.00E+00 |
| 1,2-Dichloroethene | 50558B | 3/15/89 | VOA | <5.00E+00 |
| 1,2-Dichloroethene | 50572 | 3/29/89 | VOA | <5.00E+00 |
| 1,2-Dichloroethene | 50572B | 3/29/89 | VOA | <5.00E+00 |
| 1,2-Dichloroethene | 50596 | 4/12/89 | VOA | <5.00E+00 |
| 1,2-Dichloroethene | 50596B | 4/12/89 | VOA | <5.00E+00 |
| 1,2-Dichloroethene | 50804 | 11/28/89 | VOA | <5.00E+00 |

Table B-2. Total Data.
(sheet 29 of 49)

| Constituent | Sample # | Date | Method | Result |
|---|---|---|---|---|
| 1,2-Dichloroethene | 50804B | 11/28/89 | VOA | <5.00E+00 |
| 1,2-Dichloroethene | 50804T | 11/28/89 | VOA | <5.00E+00 |
| 1,2-Dichloroethene | 50014 | 9/11/85 | VOA | <1.00E+01 |
| 1,2-Dichloroethene | 50456 | 9/16/88 | VOA | <1.00E+01 |
| 1,2-Dichloroethene | 50456B | 9/16/88 | VOA | <1.00E+01 |
| 1,2-Dichloroethene | 50462 | 9/23/88 | VOA | <1.00E+01 |
| 1,2-Dichloroethene | 50462B | 9/23/88 | VOA | <1.00E+01 |
| 1,2-Dichloroethene | 50468 | 10/10/88 | VOA | <1.00E+01 |
| 1,2-Dichloroethene | 50468B | 10/10/88 | VOA | <1.00E+01 |
| 1,2-Dichloroethene | 50476 | 10/24/88 | VOA | <1.00E+01 |
| 1,2-Dichloroethene | 50476B | 10/24/88 | VOA | <1.00E+01 |
| 1,2-Dichloroethene | 50488 | 11/04/88 | VOA | <1.00E+01 |
| 1,2-Dichloroethene | 50488B | 11/04/88 | VOA | <1.00E+01 |
| 1,2-Dichloroethene | 50498 | 11/18/88 | VOA | <1.00E+01 |
| 1,2-Dichloroethene | 50498B | 11/18/88 | VOA | <1.00E+01 |
| 1,2-Dichloroethene | 50500 | 12/02/88 | VOA | <1.00E+01 |
| 1,2-Dichloroethene | 50500B | 12/02/88 | VOA | <1.00E+01 |
| 1,2-Dichloroethene | 50532 | 2/15/89 | VOA | <5.00E+00 |
| 1,2-Dichloroethene | 50532B | 2/15/89 | VOA | <5.00E+00 |
| 1,2-Dichloroethene | 50544 | 3/02/89 | VOA | <5.00E+00 |
| 1,2-Dichloroethene | 50544B | 3/02/89 | VOA | <5.00E+00 |
| 1,2-Dichloroethene | 50556 | 3/15/89 | VOA | <5.00E+00 |
| 1,2-Dichloroethene | 50556B | 3/15/89 | VOA | <5.00E+00 |
| 1,2-Dichloroethene | 50570 | 3/29/89 | VOA | <5.00E+00 |
| 1,2-Dichloroethene | 50570B | 3/29/89 | VOA | <5.00E+00 |
| 1,2-Dichloroethene | 50593 | 4/11/89 | VOA | <5.00E+00 |
| 1,2-Dichloroethene | 50593B | 4/11/89 | VOA | <5.00E+00 |
| 1,2-Dichloroethene | 50661 | 10/09/89 | VOA | <5.00E+00 |
| 1,2-Dichloroethene | 50661B | 10/09/89 | VOA | <5.00E+00 |
| 1,2-Dichloroethene | 50661T | 10/09/89 | VOA | <5.00E+00 |
| 1,2-Dichloroethene | 50673 | 10/11/89 | VOA | <5.00E+00 |
| 1,2-Dichloroethene | 50673B | 10/11/89 | VOA | <5.00E+00 |
| 1,2-Dichloroethene | 50673T | 10/11/89 | VOA | <5.00E+00 |
| 1,2-Dichloroethene | 50071 | 6/19/86 | VOA | <1.00E+01 |
| 1,2-Dichloroethene | 50071B | 6/19/86 | VOA | <1.00E+01 |
| 1,2-Dichloroethene | 50085 | 7/07/86 | VOA | <1.00E+01 |
| 1,2-Dichloroethene | 50085B | 7/07/86 | VOA | <1.00E+01 |
| 1,2-Dichloroethene | 51079 | 3/21/90 | VOA | <5.00E+00 |
| 1,2-Dichloroethene | 51079B | 3/21/90 | VOA | <5.00E+00 |
| 1,2-Dichloroethene | 51079T | 3/21/90 | VOA | <5.00E+00 |
| Dichloromethane | 50053 | 5/31/86 | VOA | <1.00E+01 |
| Dichloromethane | 50113 | 8/18/86 | VOA | <1.00E+01 |
| Dichloromethane | 50113B | 8/18/86 | VOA | <1.00E+01 |
| Dichloromethane | 50149 | 10/03/86 | VOA | <1.00E+01 |
| Dichloromethane | 50149B | 10/03/86 | VOA | 1.10E+02 |
| Dichloromethane | 50214 | 1/06/87 | VOA | <1.00E+01 |

Table B-2. Total Data.
(sheet 30 of 49)

| Constituent | Sample # | Date | Method | Result |
|---|---|---|---|---|
| Dichloromethane | 50214B | 1/06/87 | VOA | 4.40E+01 |
| Dichloromethane | 50454 | 9/16/88 | VOA | <1.00E+01 |
| Dichloromethane | 50454B | 9/16/88 | VOA | <1.00E+01 |
| Dichloromethane | 50460 | 9/23/88 | VOA | <1.00E+01 |
| Dichloromethane | 50460B | 9/23/88 | VOA | <1.00E+01 |
| Dichloromethane | 50470 | 10/10/88 | VOA | <1.00E+01 |
| Dichloromethane | 50470B | 10/10/88 | VOA | <1.00E+01 |
| Dichloromethane | 50478 | 10/24/88 | VOA | <1.00E+01 |
| Dichloromethane | 50478B | 10/24/88 | VOA | <1.00E+01 |
| Dichloromethane | 50490 | 11/04/88 | VOA | <1.00E+01 |
| Dichloromethane | 50490B | 11/04/88 | VOA | <1.00E+01 |
| Dichloromethane | 50502 | 12/02/88 | VOA | <1.00E+01 |
| Dichloromethane | 50502B | 12/02/88 | VOA | <1.00E+01 |
| Dichloromethane | 50512 | 12/16/88 | VOA | <1.00E+01 |
| Dichloromethane | 50512B | 12/16/88 | VOA | <1.00E+01 |
| Dichloromethane | 50514 | 12/16/88 | VOA | <1.00E+01 |
| Dichloromethane | 50514B | 12/16/88 | VOA | <1.00E+01 |
| Dichloromethane | 50534 | 2/15/89 | VOA | <5.00E+00 |
| Dichloromethane | 50534B | 2/15/89 | VOA | <5.00E+00 |
| Dichloromethane | 50542 | 3/02/89 | VOA | <5.00E+00 |
| Dichloromethane | 50542B | 3/02/89 | VOA | <5.00E+00 |
| Dichloromethane | 50558 | 3/15/89 | VOA | <5.00E+00 |
| Dichloromethane | 50558B | 3/15/89 | VOA | <5.00E+00 |
| Dichloromethane | 50572 | 3/29/89 | VOA | <5.00E+00 |
| Dichloromethane | 50572B | 3/29/89 | VOA | <5.00E+00 |
| Dichloromethane | 50596 | 4/12/89 | VOA | <5.00E+00 |
| Dichloromethane | 50596B | 4/12/89 | VOA | <5.00E+00 |
| Dichloromethane | 50804 | 11/28/89 | VOA | <5.00E+00 |
| Dichloromethane | 50804B | 11/28/89 | VOA | 7.00E+00 |
| Dichloromethane | 50804T | 11/28/89 | VOA | 6.00E+00 |
| Dichloromethane | 50014 | 9/11/85 | VOA | <1.00E+01 |
| Dichloromethane | 50456 | 9/16/88 | VOA | <1.00E+01 |
| Dichloromethane | 50456B | 9/16/88 | VOA | <1.00E+01 |
| Dichloromethane | 50462 | 9/23/88 | VOA | <1.00E+01 |
| Dichloromethane | 50462B | 9/23/88 | VOA | <1.00E+01 |
| Dichloromethane | 50468 | 10/10/88 | VOA | <1.00E+01 |
| Dichloromethane | 50468B | 10/10/88 | VOA | <1.00E+01 |
| Dichloromethane | 50476 | 10/24/88 | VOA | <1.00E+01 |
| Dichloromethane | 50476B | 10/24/88 | VOA | <1.00E+01 |
| Dichloromethane | 50488 | 11/04/88 | VOA | <1.00E+01 |
| Dichloromethane | 50488B | 11/04/88 | VOA | <1.00E+01 |
| Dichloromethane | 50498 | 11/18/88 | VOA | <1.00E+01 |
| Dichloromethane | 50498B | 11/18/88 | VOA | <1.00E+01 |
| Dichloromethane | 50500 | 12/02/88 | VOA | <1.00E+01 |
| Dichloromethane | 50500B | 12/02/88 | VOA | <1.00E+01 |
| Dichloromethane | 50532 | 2/15/89 | VOA | <4.00E+00 |

Table B-2. Total Data.
(sheet 31 of 49)

| Constituent | Sample # | Date | Method | Result |
|---|---|---|---|---|
| Dichloromethane | 50532B | 2/15/89 | VOA | <5.00E+00 |
| Dichloromethane | 50544 | 3/02/89 | VOA | <5.00E+00 |
| Dichloromethane | 50544B | 3/02/89 | VOA | <5.00E+00 |
| Dichloromethane | 50556 | 3/15/89 | VOA | <5.00E+00 |
| Dichloromethane | 50556B | 3/15/89 | VOA | <5.00E+00 |
| Dichloromethane | 50570 | 3/29/89 | VOA | <5.00E+00 |
| Dichloromethane | 50570B | 3/29/89 | VOA | <5.00E+00 |
| Dichloromethane | 50593 | 4/11/89 | VOA | <5.00E+00 |
| Dichloromethane | 50593B | 4/11/89 | VOA | 1.00E+01 |
| Dichloromethane | 50661 | 10/09/89 | VOA | <5.00E+00 |
| Dichloromethane | 50661B | 10/09/89 | VOA | 6.00E+02 |
| Dichloromethane | 50661T | 10/09/89 | VOA | 6.30E+02 |
| Dichloromethane | 50673 | 10/11/89 | VOA | <5.00E+00 |
| Dichloromethane | 50673B | 10/11/89 | VOA | 4.70E+02 |
| Dichloromethane | 50673T | 10/11/89 | VOA | 4.90E+02 |
| Dichloromethane | 50071 | 6/19/86 | VOA | <1.00E+01 |
| Dichloromethane | 50071B | 6/19/86 | VOA | 1.90E+02 |
| Dichloromethane | 50085 | 7/07/86 | VOA | <1.00E+01 |
| Dichloromethane | 50085B | 7/07/86 | VOA | 1.80E+02 |
| Dichloromethane | 51079 | 3/21/90 | VOA | <5.00E+00 |
| Dichloromethane | 51079B | 3/21/90 | VOA | <5.00E+00 |
| Dichloromethane | 51079T | 3/21/90 | VOA | <5.00E+00 |
| 2,3-Dimethylbutane | 50512B | 12/16/88 | VOA | 1.30E+02 |
| Ethanol | 50514 | 12/16/88 | VOA | 4.00E+00 |
| Ethanol | 50534 | 2/15/89 | DIGC | <1.00E+04 |
| Ethanol | 50542 | 3/02/89 | DIGC | <1.00E+04 |
| Ethanol | 50558 | 3/15/89 | DIGC | <1.00E+04 |
| Ethanol | 50572 | 3/29/89 | DIGC | <1.00E+04 |
| Ethanol | 50596 | 4/12/89 | DIGC | <1.00E+04 |
| Ethanol | 50804 | 11/28/89 | DIGC | <1.00E+04 |
| Ethanol | 50532 | 2/15/89 | DIGC | <1.00E+04 |
| Ethanol | 50544 | 3/02/89 | DIGC | <1.00E+04 |
| Ethanol | 50556 | 3/15/89 | DIGC | <1.00E+04 |
| Ethanol | 50570 | 3/29/89 | DIGC | <1.00E+04 |
| Ethanol | 50593 | 4/11/89 | DIGC | <1.00E+04 |
| Ethanol | 50661 | 10/09/89 | DIGC | <1.00E+04 |
| Ethanol | 50673 | 10/11/89 | DIGC | <1.00E+04 |
| Ethanol | 51079 | 3/21/90 | DIGC | <1.00E+04 |
| Ethylbenzene | 50512 | 12/16/88 | VOA | 3.00E+00 |
| Ethylbenzene | 50534 | 2/15/89 | VOA | <5.00E+00 |
| Ethylbenzene | 50534B | 2/15/89 | VOA | <5.00E+00 |
| Ethylbenzene | 50542 | 3/02/89 | VOA | <5.00E+00 |
| Ethylbenzene | 50542B | 3/02/89 | VOA | <5.00E+00 |
| Ethylbenzene | 50558 | 3/15/89 | VOA | <5.00E+00 |
| Ethylbenzene | 50558B | 3/15/89 | VOA | <5.00E+00 |
| Ethylbenzene | 50572 | 3/29/89 | VOA | <5.00E+00 |

Table B-2. Total Data.
(sheet 32 of 49)

| Constituent | Sample # | Date | Method | Result |
|---|---|---|---|---|
| Ethylbenzene | 50572B | 3/29/89 | VOA | <5.00E+00 |
| Ethylbenzene | 50596 | 4/12/89 | VOA | <5.00E+00 |
| Ethylbenzene | 50596B | 4/12/89 | VOA | <5.00E+00 |
| Ethylbenzene | 50804 | 11/28/89 | VOA | <5.00E+00 |
| Ethylbenzene | 50804B | 11/28/89 | VOA | <5.00E+00 |
| Ethylbenzene | 50804T | 11/28/89 | VOA | <5.00E+00 |
| Ethylbenzene | 50532 | 2/15/89 | VOA | <5.00E+00 |
| Ethylbenzene | 50532B | 2/15/89 | VOA | <5.00E+00 |
| Ethylbenzene | 50544 | 3/02/89 | VOA | <5.00E+00 |
| Ethylbenzene | 50544B | 3/02/89 | VOA | <5.00E+00 |
| Ethylbenzene | 50556 | 3/15/89 | VOA | <5.00E+00 |
| Ethylbenzene | 50556B | 3/15/89 | VOA | <5.00E+00 |
| Ethylbenzene | 50570 | 3/29/89 | VOA | <5.00E+00 |
| Ethylbenzene | 50570B | 3/29/89 | VOA | <5.00E+00 |
| Ethylbenzene | 50593 | 4/11/89 | VOA | <5.00E+00 |
| Ethylbenzene | 50593B | 4/11/89 | VOA | <5.00E+00 |
| Ethylbenzene | 50661 | 10/09/89 | VOA | <5.00E+00 |
| Ethylbenzene | 50661B | 10/09/89 | VOA | <5.00E+00 |
| Ethylbenzene | 50661T | 10/09/89 | VOA | <5.00E+00 |
| Ethylbenzene | 50673 | 10/11/89 | VOA | <5.00E+00 |
| Ethylbenzene | 50673B | 10/11/89 | VOA | <5.00E+00 |
| Ethylbenzene | 50673T | 10/11/89 | VOA | <5.00E+00 |
| Ethylbenzene | 51079 | 3/21/90 | VOA | <5.00E+00 |
| Ethylbenzene | 51079B | 3/21/90 | VOA | <5.00E+00 |
| Ethylbenzene | 51079T | 3/21/90 | VOA | <5.00E+00 |
| 2-Hexanone | 50512B | 12/16/88 | VOA | 1.00E+01 |
| 2-Hexanone | 50534 | 2/15/89 | VOA | <5.00E+01 |
| 2-Hexanone | 50534B | 2/15/89 | VOA | <5.00E+01 |
| 2-Hexanone | 50542 | 3/02/89 | VOA | <5.00E+01 |
| 2-Hexanone | 50542B | 3/02/89 | VOA | <5.00E+01 |
| 2-Hexanone | 50558 | 3/15/89 | VOA | <5.00E+01 |
| 2-Hexanone | 50558B | 3/15/89 | VOA | <5.00E+01 |
| 2-Hexanone | 50572 | 3/29/89 | VOA | <5.00E+01 |
| 2-Hexanone | 50572B | 3/29/89 | VOA | <5.00E+01 |
| 2-Hexanone | 50596 | 4/12/89 | VOA | <5.00E+01 |
| 2-Hexanone | 50596B | 4/12/89 | VOA | <5.00E+01 |
| 2-Hexanone | 50804 | 11/28/89 | VOA | <5.00E+01 |
| 2-Hexanone | 50804B | 11/28/89 | VOA | <5.00E+01 |
| 2-Hexanone | 50804T | 11/28/89 | VOA | <5.00E+01 |
| 2-Hexanone | 50532 | 2/15/89 | VOA | <5.00E+01 |
| 2-Hexanone | 50532B | 2/15/89 | VOA | <5.00E+01 |
| 2-Hexanone | 50544 | 3/02/89 | VOA | <5.00E+01 |
| 2-Hexanone | 50544B | 3/02/89 | VOA | <5.00E+01 |
| 2-Hexanone | 50556 | 3/15/89 | VOA | <5.00E+01 |
| 2-Hexanone | 50556B | 3/15/89 | VOA | <5.00E+01 |
| 2-Hexanone | 50570 | 3/29/89 | VOA | <5.00E+01 |

Table B-2. Total Data.
(sheet 33 of 49)

| Constituent | Sample # | Date | Method | Result |
|---|---|---|---|---|
| 2-Hexanone | 50570B | 3/29/89 | VOA | <5.00E+01 |
| 2-Hexanone | 50593 | 4/11/89 | VOA | <5.00E+01 |
| 2-Hexanone | 50593B | 4/11/89 | VOA | <5.00E+01 |
| 2-Hexanone | 50661 | 10/09/89 | VOA | <5.00E+01 |
| 2-Hexanone | 50661B | 10/09/89 | VOA | <5.00E+01 |
| 2-Hexanone | 50661T | 10/09/89 | VOA | <5.00E+01 |
| 2-Hexanone | 50673 | 10/11/89 | VOA | <5.00E+01 |
| 2-Hexanone | 50673B | 10/11/89 | VOA | <5.00E+01 |
| 2-Hexanone | 50673T | 10/11/89 | VOA | <5.00E+01 |
| 2-Hexanone | 51079 | 3/21/90 | VOA | <5.00E+01 |
| 2-Hexanone | 51079B | 3/21/90 | VOA | <5.00E+01 |
| 2-Hexanone | 51079T | 3/21/90 | VOA | <5.00E+01 |
| Methylcyclopentane | 50512B | 12/16/88 | VOA | 5.00E+00 |
| MIBK (Hexone) | 50454 | 9/16/88 | VOA | <1.00E+01 |
| MIBK (Hexone) | 50454B | 9/16/88 | VOA | <1.00E+01 |
| MIBK (Hexone) | 50460 | 9/23/88 | VOA | <1.00E+01 |
| MIBK (Hexone) | 50460B | 9/23/88 | VOA | <1.00E+01 |
| MIBK (Hexone) | 50470 | 10/10/88 | VOA | <1.00E+01 |
| MIBK (Hexone) | 50470B | 10/10/88 | VOA | <1.00E+01 |
| MIBK (Hexone) | 50478 | 10/24/88 | VOA | <1.00E+01 |
| MIBK (Hexone) | 50478B | 10/24/88 | VOA | <1.00E+01 |
| MIBK (Hexone) | 50490 | 11/04/88 | VOA | <1.00E+01 |
| MIBK (Hexone) | 50490B | 11/04/88 | VOA | <1.00E+01 |
| MIBK (Hexone) | 50502 | 12/02/88 | VOA | <1.00E+01 |
| MIBK (Hexone) | 50502B | 12/02/88 | VOA | <1.00E+01 |
| MIBK (Hexone) | 50512 | 12/16/88 | VOA | <1.00E+01 |
| MIBK (Hexone) | 50512 | 12/16/88 | VOA | 4.00E+00 |
| MIBK (Hexone) | 50512B | 12/16/88 | VOA | <1.00E+01 |
| MIBK (Hexone) | 50512B | 12/16/88 | VOA | 6.50E+01 |
| MIBK (Hexone) | 50514 | 12/16/88 | VOA | <1.00E+01 |
| MIBK (Hexone) | 50514B | 12/16/88 | VOA | <1.00E+01 |
| MIBK (Hexone) | 50534 | 2/15/89 | VOA | <1.00E+01 |
| MIBK (Hexone) | 50534B | 2/15/89 | VOA | <1.00E+01 |
| MIBK (Hexone) | 50542 | 3/02/89 | VOA | <1.00E+01 |
| MIBK (Hexone) | 50542B | 3/02/89 | VOA | <1.00E+01 |
| MIBK (Hexone) | 50558 | 3/15/89 | VOA | <1.00E+01 |
| MIBK (Hexone) | 50558B | 3/15/89 | VOA | <1.00E+01 |
| MIBK (Hexone) | 50572 | 3/29/89 | VOA | <1.00E+01 |
| MIBK (Hexone) | 50572B | 3/29/89 | VOA | <1.00E+01 |
| MIBK (Hexone) | 50596 | 4/12/89 | VOA | <1.00E+01 |
| MIBK (Hexone) | 50596B | 4/12/89 | VOA | <1.00E+01 |
| MIBK (Hexone) | 50804 | 11/28/89 | VOA | <1.00E+01 |
| MIBK (Hexone) | 50804B | 11/28/89 | VOA | <1.00E+01 |
| MIBK (Hexone) | 50804T | 11/28/89 | VOA | <1.00E+01 |
| MIBK (Hexone) | 50456 | 9/16/88 | VOA | <1.00E+01 |
| MIBK (Hexone) | 50456B | 9/16/88 | VOA | <1.00E+01 |

Table B-2. Total Data.
(sheet 34 of 49)

| Constituent | Sample # | Date | Method | Result |
|---|---|---|---|---|
| MIBK (Hexone) | 50462 | 9/23/88 | VOA | <1.00E+01 |
| MIBK (Hexone) | 50462B | 9/23/88 | VOA | <1.00E+01 |
| MIBK (Hexone) | 50468 | 10/10/88 | VOA | <1.00E+01 |
| MIBK (Hexone) | 50468B | 10/10/88 | VOA | <1.00E+01 |
| MIBK (Hexone) | 50476 | 10/24/88 | VOA | <1.00E+01 |
| MIBK (Hexone) | 50476B | 10/24/88 | VOA | <1.00E+01 |
| MIBK (Hexone) | 50488 | 11/04/88 | VOA | <1.00E+01 |
| MIBK (Hexone) | 50488B | 11/04/88 | VOA | <1.00E+01 |
| MIBK (Hexone) | 50498 | 11/18/88 | VOA | <1.00E+01 |
| MIBK (Hexone) | 50498B | 11/18/88 | VOA | <1.00E+01 |
| MIBK (Hexone) | 50500 | 12/02/88 | VOA | <1.00E+01 |
| MIBK (Hexone) | 50500B | 12/02/88 | VOA | <1.00E+01 |
| MIBK (Hexone) | 50532 | 2/15/89 | VOA | <1.00E+01 |
| MIBK (Hexone) | 50532B | 2/15/89 | VOA | <1.00E+01 |
| MIBK (Hexone) | 50544 | 3/02/89 | VOA | <1.00E+01 |
| MIBK (Hexone) | 50544B | 3/02/89 | VOA | <1.00E+01 |
| MIBK (Hexone) | 50556 | 3/15/89 | VOA | <1.00E+01 |
| MIBK (Hexone) | 50556B | 3/15/89 | VOA | <1.00E+01 |
| MIBK (Hexone) | 50570 | 3/29/89 | VOA | <1.00E+01 |
| MIBK (Hexone) | 50570B | 3/29/89 | VOA | <1.00E+01 |
| MIBK (Hexone) | 50593 | 4/11/89 | VOA | <1.00E+01 |
| MIBK (Hexone) | 50593B | 4/11/89 | VOA | <1.00E+01 |
| MIBK (Hexone) | 50661 | 10/09/89 | VOA | <1.00E+01 |
| MIBK (Hexone) | 50661B | 10/09/89 | VOA | <1.00E+01 |
| MIBK (Hexone) | 50661T | 10/09/89 | VOA | <1.00E+01 |
| MIBK (Hexone) | 50673 | 10/11/89 | VOA | <1.00E+01 |
| MIBK (Hexone) | 50673B | 10/11/89 | VOA | <1.00E+01 |
| MIBK (Hexone) | 50673T | 10/11/89 | VOA | <1.00E+01 |
| MIBK (Hexone) | 51079 | 3/21/90 | VOA | <1.00E+01 |
| MIBK (Hexone) | 51079B | 3/21/90 | VOA | <1.00E+01 |
| MIBK (Hexone) | 51079T | 3/21/90 | VOA | <1.00E+01 |
| Pentane | 50512B | 12/16/88 | VOA | 1.00E+01 |
| Tetrahydrofuran | 50514B | 12/16/88 | VOA | 3.60E+01 |
| Tetrahydrofuran | 50534 | 2/15/89 | VOA | <1.00E+01 |
| Tetrahydrofuran | 50534B | 2/15/89 | VOA | <1.00E+01 |
| Tetrahydrofuran | 50542 | 3/02/89 | VOA | <1.00E+01 |
| Tetrahydrofuran | 50542B | 3/02/89 | VOA | <1.00E+01 |
| Tetrahydrofuran | 50558 | 3/15/89 | VOA | <1.00E+01 |
| Tetrahydrofuran | 50558B | 3/15/89 | VOA | <1.00E+01 |
| Tetrahydrofuran | 50572 | 3/29/89 | VOA | <1.00E+01 |
| Tetrahydrofuran | 50572B | 3/29/89 | VOA | <1.00E+01 |
| Tetrahydrofuran | 50596 | 4/12/89 | VOA | <1.00E+01 |
| Tetrahydrofuran | 50596B | 4/12/89 | VOA | <1.00E+01 |
| Tetrahydrofuran | 50804 | 11/28/89 | VOA | <1.00E+01 |
| Tetrahydrofuran | 50804B | 11/28/89 | VOA | <6.00E+00 |
| Tetrahydrofuran | 50804T | 11/28/89 | VOA | <5.00E+00 |

Table B-2. Total Data.
(sheet 35 of 49)

| Constituent | Sample # | Date | Method | Result |
|---|---|---|---|---|
| Tetrahydrofuran | 50532 | 2/15/89 | VOA | <1.00E+01 |
| Tetrahydrofuran | 50532B | 2/15/89 | VOA | <1.00E+01 |
| Tetrahydrofuran | 50544 | 3/02/89 | VOA | <1.00E+01 |
| Tetrahydrofuran | 50544B | 3/02/89 | VOA | <1.00E+01 |
| Tetrahydrofuran | 50556 | 3/15/89 | VOA | <1.00E+01 |
| Tetrahydrofuran | 50556B | 3/15/89 | VOA | <1.00E+01 |
| Tetrahydrofuran | 50570 | 3/29/89 | VOA | <1.00E+01 |
| Tetrahydrofuran | 50570B | 3/29/89 | VOA | <1.00E+01 |
| Tetrahydrofuran | 50593 | 4/11/89 | VOA | <1.00E+01 |
| Tetrahydrofuran | 50593B | 4/11/89 | VOA | <1.00E+01 |
| Tetrahydrofuran | 50661 | 10/09/89 | VOA | <1.00E+01 |
| Tetrahydrofuran | 50661B | 10/09/89 | VOA | <1.00E+01 |
| Tetrahydrofuran | 50661T | 10/09/89 | VOA | <1.00E+01 |
| Tetrahydrofuran | 50673 | 10/11/89 | VOA | <1.00E+01 |
| Tetrahydrofuran | 50673B | 10/11/89 | VOA | <1.00E+01 |
| Tetrahydrofuran | 50673T | 10/11/89 | VOA | <1.00E+01 |
| Tetrahydrofuran | 51079 | 3/21/90 | VOA | <1.00E+01 |
| Tetrahydrofuran | 51079B | 3/21/90 | VOA | 1.00E+01 |
| Tetrahydrofuran | 51079T | 3/21/90 | VOA | 1.00E+01 |
| Trichloromethane | 50053 | 5/31/86 | VOA | <1.00E+01 |
| Trichloromethane | 50113 | 8/18/86 | VOA | 3.10E+01 |
| Trichloromethane | 50113B | 8/18/86 | VOA | <1.00E+01 |
| Trichloromethane | 50149 | 10/03/86 | VOA | 1.10E+01 |
| Trichloromethane | 50149B | 10/03/86 | VOA | <1.00E+01 |
| Trichloromethane | 50214 | 1/06/87 | VOA | 1.20E+01 |
| Trichloromethane | 50214B | 1/06/87 | VOA | <1.00E+01 |
| Trichloromethane | 50454 | 9/16/88 | VOA | 1.40E+01 |
| Trichloromethane | 50454B | 9/16/88 | VOA | <5.00E+00 |
| Trichloromethane | 50460 | 9/23/88 | VOA | 1.70E+01 |
| Trichloromethane | 50460B | 9/23/88 | VOA | <5.00E+00 |
| Trichloromethane | 50470 | 10/10/88 | VOA | 1.20E+01 |
| Trichloromethane | 50470B | 10/10/88 | VOA | <5.00E+00 |
| Trichloromethane | 50478 | 10/24/88 | VOA | 8.00E+00 |
| Trichloromethane | 50478B | 10/24/88 | VOA | <5.00E+00 |
| Trichloromethane | 50490 | 11/04/88 | VOA | 8.00E+00 |
| Trichloromethane | 50490B | 11/04/88 | VOA | <5.00E+00 |
| Trichloromethane | 50502 | 12/02/88 | VOA | 6.00E+00 |
| Trichloromethane | 50502B | 12/02/88 | VOA | <5.00E+00 |
| Trichloromethane | 50512 | 12/16/88 | VOA | <5.00E+00 |
| Trichloromethane | 50512B | 12/16/88 | VOA | <5.00E+00 |
| Trichloromethane | 50514 | 12/16/88 | VOA | 7.00E+00 |
| Trichloromethane | 50514B | 12/16/88 | VOA | <5.00E+00 |
| Trichloromethane | 50534 | 2/15/89 | VOA | 5.00E+00 |
| Trichloromethane | 50534B | 2/15/89 | VOA | <5.00E+00 |
| Trichloromethane | 50542 | 3/02/89 | VOA | 6.00E+00 |
| Trichloromethane | 50542B | 3/02/89 | VOA | <5.00E+00 |

Table B-2. Total Data.
(sheet 36 of 49)

| Constituent | Sample # | Date | Method | Result |
|---|---|---|---|---|
| Trichloromethane | 50558 | 3/15/89 | VOA | 6.00E+00 |
| Trichloromethane | 50558B | 3/15/89 | VOA | <5.00E+00 |
| Trichloromethane | 50572 | 3/29/89 | VOA | 8.00E+00 |
| Trichloromethane | 50572B | 3/29/89 | VOA | <5.00E+00 |
| Trichloromethane | 50596 | 4/12/89 | VOA | 9.00E+00 |
| Trichloromethane | 50596B | 4/12/89 | VOA | <5.00E+00 |
| Trichloromethane | 50804 | 11/28/89 | VOA | 2.10E+01 |
| Trichloromethane | 50804B | 11/28/89 | VOA | 1.00E+01 |
| Trichloromethane | 50804T | 11/28/89 | VOA | 9.00E+00 |
| Trichloromethane | 50014 | 9/11/85 | VOA | <1.00E+01 |
| Trichloromethane | 50456 | 9/16/88 | VOA | 1.20E+01 |
| Trichloromethane | 50456B | 9/16/88 | VOA | <5.00E+00 |
| Trichloromethane | 50462 | 9/23/88 | VOA | 1.50E+01 |
| Trichloromethane | 50462B | 9/23/88 | VOA | <5.00E+00 |
| Trichloromethane | 50468 | 10/10/88 | VOA | 1.30E+01 |
| Trichloromethane | 50468B | 10/10/88 | VOA | <5.00E+00 |
| Trichloromethane | 50476 | 10/24/88 | VOA | 8.00E+00 |
| Trichloromethane | 50476B | 10/24/88 | VOA | <5.00E+00 |
| Trichloromethane | 50488 | 11/04/88 | VOA | 1.00E+01 |
| Trichloromethane | 50488B | 11/04/88 | VOA | <5.00E+00 |
| Trichloromethane | 50498 | 11/18/88 | VOA | 1.20E+01 |
| Trichloromethane | 50498B | 11/18/88 | VOA | <5.00E+00 |
| Trichloromethane | 50500 | 12/02/88 | VOA | 8.00E+00 |
| Trichloromethane | 50500B | 12/02/88 | VOA | <5.00E+00 |
| Trichloromethane | 50532 | 2/15/89 | VOA | <5.00E+00 |
| Trichloromethane | 50532B | 2/15/89 | VOA | <5.00E+00 |
| Trichloromethane | 50544 | 3/02/89 | VOA | 5.00E+00 |
| Trichloromethane | 50544B | 3/02/89 | VOA | <5.00E+00 |
| Trichloromethane | 50556 | 3/15/89 | VOA | 7.00E+00 |
| Trichloromethane | 50556B | 3/15/89 | VOA | <5.00E+00 |
| Trichloromethane | 50570 | 3/29/89 | VOA | 9.00E+00 |
| Trichloromethane | 50570B | 3/29/89 | VOA | <5.00E+00 |
| Trichloromethane | 50593 | 4/11/89 | VOA | 1.00E+01 |
| Trichloromethane | 50593B | 4/11/89 | VOA | <5.00E+00 |
| Trichloromethane | 50661 | 10/09/89 | VOA | 2.50E+01 |
| Trichloromethane | 50661B | 10/09/89 | VOA | <5.00E+00 |
| Trichloromethane | 50661T | 10/09/89 | VOA | <5.00E+00 |
| Trichloromethane | 50673 | 10/11/89 | VOA | 2.00E+01 |
| Trichloromethane | 50673B | 10/11/89 | VOA | <5.00E+00 |
| Trichloromethane | 50673T | 10/11/89 | VOA | <5.00E+00 |
| Trichloromethane | 50071 | 6/19/86 | VOA | <1.00E+01 |
| Trichloromethane | 50071B | 6/19/86 | VOA | <1.00E+01 |
| Trichloromethane | 50085 | 7/07/86 | VOA | <1.00E+01 |
| Trichloromethane | 50085B | 7/07/86 | VOA | <1.00E+01 |
| Trichloromethane | 51079 | 3/21/90 | VOA | 1.30E+01 |
| Trichloromethane | 51079B | 3/21/90 | VOA | <4.00E+00 |

Table B-2. Total Data.
(sheet 37 of 49)

| Constituent | Sample # | Date | Method | Result |
|---|---|---|---|---|
| Trichloromethane | 51079T | 3/21/90 | VOA | <4.00E+00 |
| Unknown | 50478 | 10/24/88 | VOA | 3.00E+01 |
| Unknown | 50512 | 12/16/88 | VOA | 1.00E+00 |
| Unknown | 50514B | 12/16/88 | VOA | 1.80E+01 |
| Unknown | 50596 | 4/12/89 | ABN | 4.60E+01 |
| Unknown aliphatic HC | 50512 | 12/16/88 | VOA | 9.00E+00 |
| Unknown aliphatic HC | 50512B | 12/16/88 | VOA | 8.00E+00 |
| Unknown aliphatic HC | 50514 | 12/16/88 | VOA | 9.00E+00 |
| Unknown aliphatic HC | 50514B | 12/16/88 | VOA | 7.00E+00 |
| Unknown amide | 50804 | 11/28/89 | ABN | 2.60E+01 |
| 1,4-Xylene & 1,2-Xylene | 50053 | 5/31/86 | VOA | <1.00E+01 |
| 1,4-Xylene & 1,2-Xylene | 50113 | 8/18/86 | VOA | <1.00E+01 |
| 1,4-Xylene & 1,2-Xylene | 50113B | 8/18/86 | VOA | <1.00E+01 |
| 1,4-Xylene & 1,2-Xylene | 50149 | 10/03/86 | VOA | <1.00E+01 |
| 1,4-Xylene & 1,2-Xylene | 50149B | 10/03/86 | VOA | <1.00E+01 |
| 1,4-Xylene & 1,2-Xylene | 50214 | 1/06/87 | VOA | 1.70E+01 |
| 1,4-Xylene & 1,2-Xylene | 50214B | 1/06/87 | VOA | <1.00E+01 |
| 1,4-Xylene & 1,2-Xylene | 50454 | 9/16/88 | VOA | <5.00E+00 |
| 1,4-Xylene & 1,2-Xylene | 50454B | 9/16/88 | VOA | <5.00E+00 |
| 1,4-Xylene & 1,2-Xylene | 50460 | 9/23/88 | VOA | <5.00E+00 |
| 1,4-Xylene & 1,2-Xylene | 50460B | 9/23/88 | VOA | <5.00E+00 |
| 1,4-Xylene & 1,2-Xylene | 50470 | 10/10/88 | VOA | <5.00E+00 |
| 1,4-Xylene & 1,2-Xylene | 50470B | 10/10/88 | VOA | <5.00E+00 |
| 1,4-Xylene & 1,2-Xylene | 50478 | 10/24/88 | VOA | <5.00E+00 |
| 1,4-Xylene & 1,2-Xylene | 50478B | 10/24/88 | VOA | <5.00E+00 |
| 1,4-Xylene & 1,2-Xylene | 50490 | 11/04/88 | VOA | <5.00E+00 |
| 1,4-Xylene & 1,2-Xylene | 50490B | 11/04/88 | VOA | <5.00E+00 |
| 1,4-Xylene & 1,2-Xylene | 50502 | 12/02/88 | VOA | <5.00E+00 |
| 1,4-Xylene & 1,2-Xylene | 50502B | 12/02/88 | VOA | <5.00E+00 |
| 1,4-Xylene & 1,2-Xylene | 50512 | 12/16/88 | VOA | <5.00E+00 |
| 1,4-Xylene & 1,2-Xylene | 50512B | 12/16/88 | VOA | <5.00E+00 |
| 1,4-Xylene & 1,2-Xylene | 50514 | 12/16/88 | VOA | <5.00E+00 |
| 1,4-Xylene & 1,2-Xylene | 50514B | 12/16/88 | VOA | <3.00E+00 |
| 1,4-Xylene & 1,2-Xylene | 50534 | 2/15/89 | VOA | <5.00E+00 |
| 1,4-Xylene & 1,2-Xylene | 50534B | 2/15/89 | VOA | <5.00E+00 |
| 1,4-Xylene & 1,2-Xylene | 50542 | 3/02/89 | VOA | <5.00E+00 |
| 1,4-Xylene & 1,2-Xylene | 50542B | 3/02/89 | VOA | <5.00E+00 |
| 1,4-Xylene & 1,2-Xylene | 50558 | 3/15/89 | VOA | <5.00E+00 |
| 1,4-Xylene & 1,2-Xylene | 50558B | 3/15/89 | VOA | <5.00E+00 |
| 1,4-Xylene & 1,2-Xylene | 50572 | 3/29/89 | VOA | <5.00E+00 |
| 1,4-Xylene & 1,2-Xylene | 50572B | 3/29/89 | VOA | <5.00E+00 |
| 1,4-Xylene & 1,2-Xylene | 50596 | 4/12/89 | VOA | <5.00E+00 |
| 1,4-Xylene & 1,2-Xylene | 50596B | 4/12/89 | VOA | <5.00E+00 |
| 1,4-Xylene & 1,2-Xylene | 50804 | 11/28/89 | VOA | <5.00E+00 |
| 1,4-Xylene & 1,2-Xylene | 50804B | 11/28/89 | VOA | <5.00E+00 |
| 1,4-Xylene & 1,2-Xylene | 50804T | 11/28/89 | VOA | <5.00E+00 |

Table B-2. Total Data.
(sheet 38 of 49)

| Constituent | Sample # | Date | Method | Result |
|---|---|---|---|---|
| 1,4-Xylene & 1,2-Xylene | 50014 | 9/11/85 | VOA | <1.00E+01 |
| 1,4-Xylene & 1,2-Xylene | 50456 | 9/16/88 | VOA | <5.00E+00 |
| 1,4-Xylene & 1,2-Xylene | 50456B | 9/16/88 | VOA | <5.00E+00 |
| 1,4-Xylene & 1,2-Xylene | 50462 | 9/23/88 | VOA | <5.00E+00 |
| 1,4-Xylene & 1,2-Xylene | 50462B | 9/23/88 | VOA | <5.00E+00 |
| 1,4-Xylene & 1,2-Xylene | 50468 | 10/10/88 | VOA | <5.00E+00 |
| 1,4-Xylene & 1,2-Xylene | 50468B | 10/10/88 | VOA | <5.00E+00 |
| 1,4-Xylene & 1,2-Xylene | 50476 | 10/24/88 | VOA | <5.00E+00 |
| 1,4-Xylene & 1,2-Xylene | 50476B | 10/24/88 | VOA | <5.00E+00 |
| 1,4-Xylene & 1,2-Xylene | 50488 | 11/04/88 | VOA | <5.00E+00 |
| 1,4-Xylene & 1,2-Xylene | 50488B | 11/04/88 | VOA | <5.00E+00 |
| 1,4-Xylene & 1,2-Xylene | 50498 | 11/18/88 | VOA | <5.00E+00 |
| 1,4-Xylene & 1,2-Xylene | 50498B | 11/18/88 | VOA | <5.00E+00 |
| 1,4-Xylene & 1,2-Xylene | 50500 | 12/02/88 | VOA | <5.00E+00 |
| 1,4-Xylene & 1,2-Xylene | 50500B | 12/02/88 | VOA | <5.00E+00 |
| 1,4-Xylene & 1,2-Xylene | 50532 | 2/15/89 | VOA | <5.00E+00 |
| 1,4-Xylene & 1,2-Xylene | 50532B | 2/15/89 | VOA | <5.00E+00 |
| 1,4-Xylene & 1,2-Xylene | 50544 | 3/02/89 | VOA | <5.00E+00 |
| 1,4-Xylene & 1,2-Xylene | 50544B | 3/02/89 | VOA | <5.00E+00 |
| 1,4-Xylene & 1,2-Xylene | 50556 | 3/15/89 | VOA | <5.00E+00 |
| 1,4-Xylene & 1,2-Xylene | 50556B | 3/15/89 | VOA | <5.00E+00 |
| 1,4-Xylene & 1,2-Xylene | 50570 | 3/29/89 | VOA | <5.00E+00 |
| 1,4-Xylene & 1,2-Xylene | 50570B | 3/29/89 | VOA | <5.00E+00 |
| 1,4-Xylene & 1,2-Xylene | 50593 | 4/11/89 | VOA | <5.00E+00 |
| 1,4-Xylene & 1,2-Xylene | 50593B | 4/11/89 | VOA | <5.00E+00 |
| 1,4-Xylene & 1,2-Xylene | 50661 | 10/09/89 | VOA | <5.00E+00 |
| 1,4-Xylene & 1,2-Xylene | 50661B | 10/09/89 | VOA | <5.00E+00 |
| 1,4-Xylene & 1,2-Xylene | 50661T | 10/09/89 | VOA | <5.00E+00 |
| 1,4-Xylene & 1,2-Xylene | 50673 | 10/11/89 | VOA | <5.00E+00 |
| 1,4-Xylene & 1,2-Xylene | 50673B | 10/11/89 | VOA | <5.00E+00 |
| 1,4-Xylene & 1,2-Xylene | 50673T | 10/11/89 | VOA | <5.00E+00 |
| 1,4-Xylene & 1,2-Xylene | 50071 | 6/19/86 | VOA | <1.00E+01 |
| 1,4-Xylene & 1,2-Xylene | 50071B | 6/19/86 | VOA | <1.00E+01 |
| 1,4-Xylene & 1,2-Xylene | 50085 | 7/07/86 | VOA | <1.00E+01 |
| 1,4-Xylene & 1,2-Xylene | 50085B | 7/07/86 | VOA | <1.00E+01 |
| 1,4-Xylene & 1,2-Xylene | 51079 | 3/21/90 | VOA | <5.00E+00 |
| 1,4-Xylene & 1,2-Xylene | 51079B | 3/21/90 | VOA | <5.00E+00 |
| 1,4-Xylene & 1,2-Xylene | 51079T | 3/21/90 | VOA | <5.00E+00 |
| 1,3-Xylene | 50053 | 5/31/86 | VOA | <1.00E+01 |
| 1,3-Xylene | 50113 | 8/18/86 | VOA | <1.00E+01 |
| 1,3-Xylene | 50113B | 8/18/86 | VOA | <1.00E+01 |
| 1,3-Xylene | 50149 | 10/03/86 | VOA | <1.00E+01 |
| 1,3-Xylene | 50149B | 10/03/86 | VOA | <1.00E+01 |
| 1,3-Xylene | 50214 | 1/06/87 | VOA | <1.00E+01 |
| 1,3-Xylene | 50214B | 1/06/87 | VOA | <1.00E+01 |
| 1,3-Xylene | 50454 | 9/16/88 | VOA | <5.00E+00 |

Table B-2. Total Data.
(sheet 39 of 49)

| Constituent | Sample # | Date | Method | Result |
|---|---|---|---|---|
| 1,3-Xylene | 50454B | 9/16/88 | VOA | <5.00E+00 |
| 1,3-Xylene | 50460 | 9/23/88 | VOA | <5.00E+00 |
| 1,3-Xylene | 50460B | 9/23/88 | VOA | <5.00E+00 |
| 1,3-Xylene | 50470 | 10/10/88 | VOA | <5.00E+00 |
| 1,3-Xylene | 50470B | 10/10/88 | VOA | <5.00E+00 |
| 1,3-Xylene | 50478 | 10/24/88 | VOA | <5.00E+00 |
| 1,3-Xylene | 50478B | 10/24/88 | VOA | <5.00E+00 |
| 1,3-Xylene | 50490 | 11/04/88 | VOA | <5.00E+00 |
| 1,3-Xylene | 50490B | 11/04/88 | VOA | <5.00E+00 |
| 1,3-Xylene | 50502 | 12/02/88 | VOA | <5.00E+00 |
| 1,3-Xylene | 50502B | 12/02/88 | VOA | <5.00E+00 |
| 1,3-Xylene | 50512 | 12/16/88 | VOA | 5.00E+00 |
| 1,3-Xylene | 50512B | 12/16/88 | VOA | <5.00E+00 |
| 1,3-Xylene | 50514 | 12/16/88 | VOA | <5.00E+00 |
| 1,3-Xylene | 50514B | 12/16/88 | VOA | 5.00E+00 |
| 1,3-Xylene | 50534 | 2/15/89 | VOA | <5.00E+00 |
| 1,3-Xylene | 50534B | 2/15/89 | VOA | <5.00E+00 |
| 1,3-Xylene | 50542 | 3/02/89 | VOA | <5.00E+00 |
| 1,3-Xylene | 50542B | 3/02/89 | VOA | <5.00E+00 |
| 1,3-Xylene | 50558 | 3/15/89 | VOA | <5.00E+00 |
| 1,3-Xylene | 50558B | 3/15/89 | VOA | <5.00E+00 |
| 1,3-Xylene | 50572 | 3/29/89 | VOA | <5.00E+00 |
| 1,3-Xylene | 50572B | 3/29/89 | VOA | <5.00E+00 |
| 1,3-Xylene | 50596 | 4/12/89 | VOA | <5.00E+00 |
| 1,3-Xylene | 50596B | 4/12/89 | VOA | <5.00E+00 |
| 1,3-Xylene | 50804 | 11/28/89 | VOA | <5.00E+00 |
| 1,3-Xylene | 50804B | 11/28/89 | VOA | <5.00E+00 |
| 1,3-Xylene | 50804T | 11/28/89 | VOA | <5.00E+00 |
| 1,3-Xylene | 50014 | 9/11/85 | VOA | <1.00E+01 |
| 1,3-Xylene | 50456 | 9/16/88 | VOA | <5.00E+00 |
| 1,3-Xylene | 50456B | 9/16/88 | VOA | <5.00E+00 |
| 1,3-Xylene | 50462 | 9/23/88 | VOA | <5.00E+00 |
| 1,3-Xylene | 50462B | 9/23/88 | VOA | <5.00E+00 |
| 1,3-Xylene | 50468 | 10/10/88 | VOA | <5.00E+00 |
| 1,3-Xylene | 50468B | 10/10/88 | VOA | <5.00E+00 |
| 1,3-Xylene | 50476 | 10/24/88 | VOA | <5.00E+00 |
| 1,3-Xylene | 50476B | 10/24/88 | VOA | <5.00E+00 |
| 1,3-Xylene | 50488 | 11/04/88 | VOA | <5.00E+00 |
| 1,3-Xylene | 50488B | 11/04/88 | VOA | <5.00E+00 |
| 1,3-Xylene | 50498 | 11/18/88 | VOA | <5.00E+00 |
| 1,3-Xylene | 50498B | 11/18/88 | VOA | <5.00E+00 |
| 1,3-Xylene | 50500 | 12/02/88 | VOA | <5.00E+00 |
| 1,3-Xylene | 50500B | 12/02/88 | VOA | <5.00E+00 |
| 1,3-Xylene | 50532 | 2/15/89 | VOA | <5.00E+00 |
| 1,3-Xylene | 50532B | 2/15/89 | VOA | <5.00E+00 |
| 1,3-Xylene | 50544 | 3/02/89 | VOA | <5.00E+00 |

Table B-2. Total Data.
(sheet 40 of 49)

| Constituent | Sample # | Date | Method | Result |
|---|---|---|---|---|
| 1,3-Xylene | 50544B | 3/02/89 | VOA | <5.00E+00 |
| 1,3-Xylene | 50556 | 3/15/89 | VOA | <5.00E+00 |
| 1,3-Xylene | 50556B | 3/15/89 | VOA | <5.00E+00 |
| 1,3-Xylene | 50570 | 3/29/89 | VOA | <5.00E+00 |
| 1,3-Xylene | 50570B | 3/29/89 | VOA | <5.00E+00 |
| 1,3-Xylene | 50593 | 4/11/89 | VOA | <5.00E+00 |
| 1,3-Xylene | 50593B | 4/11/89 | VOA | <5.00E+00 |
| 1,3-Xylene | 50661 | 10/09/89 | VOA | <5.00E+00 |
| 1,3-Xylene | 50661B | 10/09/89 | VOA | <5.00E+00 |
| 1,3-Xylene | 50661T | 10/09/89 | VOA | <5.00E+00 |
| 1,3-Xylene | 50673 | 10/11/89 | VOA | <5.00E+00 |
| 1,3-Xylene | 50673B | 10/11/89 | VOA | <5.00E+00 |
| 1,3-Xylene | 50673T | 10/11/89 | VOA | <5.00E+00 |
| 1,3-Xylene | 50071 | 6/19/86 | VOA | <1.00E+01 |
| 1,3-Xylene | 50071B | 6/19/86 | VOA | <1.00E+01 |
| 1,3-Xylene | 50085 | 7/07/86 | VOA | <1.00E+01 |
| 1,3-Xylene | 50085B | 7/07/86 | VOA | <1.00E+01 |
| 1,3-Xylene | 51079 | 3/21/90 | VOA | <5.00E+00 |
| 1,3-Xylene | 51079B | 3/21/90 | VOA | <5.00E+00 |
| 1,3-Xylene | 51079T | 3/21/90 | VOA | <5.00E+00 |
| Alkalinity (Method B) | 50804 | 11/28/89 | TITRA | 4.40E+04 |
| Alkalinity (Method B) | 50661 | 10/09/89 | TITRA | 4.70E+04 |
| Alkalinity (Method B) | 50673 | 10/11/89 | TITRA | 5.30E+04 |
| Alkalinity (Method B) | 51079 | 3/21/90 | TITRA | 4.60E+04 |
| Alpha Activity (pCi/L) | 50053 | 5/31/86 | Alpha | 1.09E+00 |
| Alpha Activity (pCi/L) | 50113 | 8/18/86 | Alpha | 1.81E+00 |
| Alpha Activity (pCi/L) | 50149 | 10/03/86 | Alpha | 8.76E+00 |
| Alpha Activity (pCi/L) | 50214 | 1/06/87 | Alpha | 7.91E-01 |
| Alpha Activity (pCi/L) | 50454 | 9/16/88 | Alpha | 8.72E-01 |
| Alpha Activity (pCi/L) | 50470 | 10/10/88 | Alpha | 1.91E+00 |
| Alpha Activity (pCi/L) | 50478 | 10/24/88 | Alpha | <6.40E-01 |
| Alpha Activity (pCi/L) | 50490 | 11/04/88 | Alpha | <6.31E-01 |
| Alpha Activity (pCi/L) | 50512 | 12/16/88 | Alpha | <5.27E-01 |
| Alpha Activity (pCi/L) | 50514 | 12/16/88 | Alpha | 9.57E-01 |
| Alpha Activity (pCi/L) | 50534 | 2/15/89 | Alpha | <8.60E-01 |
| Alpha Activity (pCi/L) | 50542 | 3/02/89 | Alpha | <4.20E-01 |
| Alpha Activity (pCi/L) | 50558 | 3/15/89 | Alpha | 8.65E-01 |
| Alpha Activity (pCi/L) | 50572 | 3/29/89 | Alpha | 1.83E+00 |
| Alpha Activity (pCi/L) | 50596 | 4/12/89 | Alpha | <5.34E-01 |
| Alpha Activity (pCi/L) | 50804 | 11/28/89 | Alpha | 7.78E-01 |
| Alpha Activity (pCi/L) | 50014 | 9/11/85 | Alpha | 9.96E+00 |
| Alpha Activity (pCi/L) | 50456 | 9/16/88 | Alpha | 1.50E+00 |
| Alpha Activity (pCi/L) | 50462 | 9/23/88 | Alpha | 2.30E+00 |
| Alpha Activity (pCi/L) | 50468 | 10/10/88 | Alpha | 1.67E+00 |
| Alpha Activity (pCi/L) | 50476 | 10/24/88 | Alpha | 1.28E+00 |
| Alpha Activity (pCi/L) | 50488 | 11/04/88 | Alpha | 9.39E-01 |

Table B-2. Total Data.
(sheet 41 of 49)

| Constituent | Sample # | Date | Method | Result |
|---|---|---|---|---|
| Alpha Activity (pCi/L) | 50498 | 11/18/88 | Alpha | <2.43E-01 |
| Alpha Activity (pCi/L) | 50500 | 12/02/88 | Alpha | <1.83E-01 |
| Alpha Activity (pCi/L) | 50532 | 2/15/89 | Alpha | <8.05E-01 |
| Alpha Activity (pCi/L) | 50544 | 3/02/89 | Alpha | <2.97E-01 |
| Alpha Activity (pCi/L) | 50556 | 3/15/89 | Alpha | <6.22E-01 |
| Alpha Activity (pCi/L) | 50570 | 3/29/89 | Alpha | <2.52E-01 |
| Alpha Activity (pCi/L) | 50593 | 4/11/89 | Alpha | <1.74E-01 |
| Alpha Activity (pCi/L) | 50661 | 10/09/89 | Alpha | 5.88E+00 |
| Alpha Activity (pCi/L) | 50673 | 10/11/89 | Alpha | 1.06E+00 |
| Alpha Activity (pCi/L) | 50071 | 6/19/86 | Alpha | 5.05E+00 |
| Alpha Activity (pCi/L) | 50085 | 7/07/86 | Alpha | 2.06E+00 |
| Alpha Activity (pCi/L) | 51079 | 3/21/90 | Alpha | <2.89E-01 |
| Beta Activity (pCi/L) | 50053 | 5/31/86 | Beta | 5.43E+00 |
| Beta Activity (pCi/L) | 50113 | 8/18/86 | Beta | 6.24E+00 |
| Beta Activity (pCi/L) | 50149 | 10/03/86 | Beta | 5.21E+00 |
| Beta Activity (pCi/L) | 50214 | 1/06/87 | Beta | 5.62E+00 |
| Beta Activity (pCi/L) | 50454 | 9/16/88 | Beta | 1.06E+01 |
| Beta Activity (pCi/L) | 50460 | 9/23/88 | Beta | 3.32E+00 |
| Beta Activity (pCi/L) | 50470 | 10/10/88 | Beta | 3.53E+00 |
| Beta Activity (pCi/L) | 50478 | 10/24/88 | Beta | <2.11E+00 |
| Beta Activity (pCi/L) | 50512 | 12/16/88 | Beta | <1.87E-01 |
| Beta Activity (pCi/L) | 50514 | 12/16/88 | Beta | 3.74E+00 |
| Beta Activity (pCi/L) | 50534 | 2/15/89 | Beta | <1.45E+00 |
| Beta Activity (pCi/L) | 50542 | 3/02/89 | Beta | 3.78E+00 |
| Beta Activity (pCi/L) | 50558 | 3/15/89 | Beta | <7.43E-01 |
| Beta Activity (pCi/L) | 50572 | 3/29/89 | Beta | <1.88E+00 |
| Beta Activity (pCi/L) | 50596 | 4/12/89 | Beta | <1.26E+00 |
| Beta Activity (pCi/L) | 50804 | 11/28/89 | Beta | <1.04E+00 |
| Beta Activity (pCi/L) | 50014 | 9/11/85 | Beta | 2.86E+01 |
| Beta Activity (pCi/L) | 50456 | 9/16/88 | Beta | 9.53E+00 |
| Beta Activity (pCi/L) | 50462 | 9/23/88 | Beta | <2.31E+00 |
| Beta Activity (pCi/L) | 50468 | 10/10/88 | Beta | <9.49E-01 |
| Beta Activity (pCi/L) | 50476 | 10/24/88 | Beta | <1.81E+00 |
| Beta Activity (pCi/L) | 50500 | 12/02/88 | Beta | <1.38E+00 |
| Beta Activity (pCi/L) | 50532 | 2/15/89 | Beta | <1.02E-01 |
| Beta Activity (pCi/L) | 50544 | 3/02/89 | Beta | <9.70E-01 |
| Beta Activity (pCi/L) | 50556 | 3/15/89 | Beta | <1.42E+00 |
| Beta Activity (pCi/L) | 50570 | 3/29/89 | Beta | <1.48E+00 |
| Beta Activity (pCi/L) | 50593 | 4/11/89 | Beta | 2.52E+00 |
| Beta Activity (pCi/L) | 50661 | 10/09/89 | Beta | 5.00E+00 |
| Beta Activity (pCi/L) | 50673 | 10/11/89 | Beta | <4.72E-01 |
| Beta Activity (pCi/L) | 50071 | 6/19/86 | Beta | 3.71E+00 |
| Beta Activity (pCi/L) | 50085 | 7/07/86 | Beta | 2.95E+00 |
| Beta Activity (pCi/L) | 51079 | 3/21/90 | Beta | 3.88E+00 |
| Conductivity (µS) | 50053 | 5/31/86 | COND-Fld | 1.50E+01 |
| Conductivity (µS) | 50113 | 8/18/86 | COND-Fld | 1.38E+02 |

Table B-2. Total Data.
(sheet 42 of 49)

| Constituent | Sample # | Date | Method | Result |
|---|---|---|---|---|
| Conductivity (µS) | 50149 | 10/03/86 | COND-Fld | 1.13E+02 |
| Conductivity (µS) | 50214 | 1/06/87 | COND-Fld | 1.39E+02 |
| Conductivity (µS) | 50454 | 9/16/88 | COND-Fld | 1.26E+02 |
| Conductivity (µS) | 50460 | 9/23/88 | COND-Fld | 1.42E+02 |
| Conductivity (µS) | 50470 | 10/10/88 | COND-Fld | 1.33E+02 |
| Conductivity (µS) | 50478 | 10/24/88 | COND-Fld | 1.65E+02 |
| Conductivity (µS) | 50490 | 11/04/88 | COND-Fld | 1.28E+02 |
| Conductivity (µS) | 50502 | 12/02/88 | COND-Fld | 1.13E+02 |
| Conductivity (µS) | 50512 | 12/16/88 | COND-Fld | 1.30E+02 |
| Conductivity (µS) | 50514 | 12/16/88 | COND-Fld | 1.40E+02 |
| Conductivity (µS) | 50534 | 2/15/89 | COND-Fld | 1.23E+02 |
| Conductivity (µS) | 50542 | 3/02/89 | COND-Fld | 9.70E+01 |
| Conductivity (µS) | 50558 | 3/15/89 | COND-Fld | 1.17E+02 |
| Conductivity (µS) | 50572 | 3/29/89 | COND-Fld | 1.31E+02 |
| Conductivity (µS) | 50596 | 4/12/89 | COND-Fld | 1.03E+02 |
| Conductivity (µS) | 50804 | 11/28/89 | COND-Fld | 1.33E+02 |
| Conductivity (µS) | 50014 | 9/11/85 | COND-Fld | 1.38E+02 |
| Conductivity (µS) | 50456 | 9/16/88 | COND-Fld | 1.68E+02 |
| Conductivity (µS) | 50462 | 9/23/88 | COND-Fld | 1.36E+02 |
| Conductivity (µS) | 50468 | 10/10/88 | COND-Fld | 1.31E+02 |
| Conductivity (µS) | 50476 | 10/24/88 | COND-Fld | 1.15E+02 |
| Conductivity (µS) | 50488 | 11/04/88 | COND-Fld | 1.27E+02 |
| Conductivity (µS) | 50498 | 11/18/88 | COND-Fld | 1.27E+02 |
| Conductivity (µS) | 50500 | 12/02/88 | COND-Fld | 1.29E+02 |
| Conductivity (µS) | 50532 | 2/15/89 | COND-Fld | 1.33E+02 |
| Conductivity (µS) | 50544 | 3/02/89 | COND-Fld | 9.80E+01 |
| Conductivity (µS) | 50556 | 3/15/89 | COND-Fld | 1.07E+02 |
| Conductivity (µS) | 50570 | 3/29/89 | COND-Fld | 1.30E+02 |
| Conductivity (µS) | 50593 | 4/11/89 | COND-Fld | 1.48E+02 |
| Conductivity (µS) | 50661 | 10/09/89 | COND-Fld | 5.46E+02 |
| Conductivity (µS) | 50673 | 10/11/89 | COND-Fld | 1.37E+02 |
| Conductivity (µS) | 50071 | 6/19/86 | COND-Fld | 1.34E+02 |
| Conductivity (µS) | 50085 | 7/07/86 | COND-Fld | 1.31E+02 |
| Conductivity (µS) | 51079 | 3/21/90 | COND-Fld | 1.37E+02 |
| Ingitability (°F) | 50804E | 11/28/89 | IGNIT | 2.12E+02 |
| Ingitability (°F) | 50661E | 10/09/89 | IGNIT | 2.10E+02 |
| Ingitability (°F) | 50673E | 10/11/89 | IGNIT | 2.10E+02 |
| Ingitability (°F) | 51079E | 3/21/90 | IGNIT | 2.06E+02 |
| pH (dimensionless) | 50053 | 5/31/86 | PH-Fld | 7.24E+00 |
| pH (dimensionless) | 50113 | 8/18/86 | PH-Fld | 5.95E+00 |
| pH (dimensionless) | 50149 | 10/03/86 | PH-Fld | 5.72E+00 |
| pH (dimensionless) | 50214 | 1/06/87 | PH-Fld | 6.42E+00 |
| pH (dimensionless) | 50454 | 9/16/88 | PH-Fld | 6.34E+00 |
| pH (dimensionless) | 50460 | 9/23/88 | PH-Fld | 6.23E+00 |
| pH (dimensionless) | 50470 | 10/10/88 | PH-Fld | 6.35E+00 |
| pH (dimensionless) | 50478 | 10/24/88 | PH-Fld | 6.01E+00 |

Table B-2. Total Data.
(sheet 43 of 49)

| Constituent | Sample # | Date | Method | Result |
|---|---|---|---|---|
| pH (dimensionless) | 50490 | 11/04/88 | PH-Fld | 5.77E+00 |
| pH (dimensionless) | 50502 | 12/02/88 | PH-Fld | 6.18E+00 |
| pH (dimensionless) | 50512 | 12/16/88 | PH-Fld | 6.81E+00 |
| pH (dimensionless) | 50514 | 12/16/88 | PH-Fld | 6.40E+00 |
| pH (dimensionless) | 50534 | 2/15/89 | PH-Fld | 5.91E+00 |
| pH (dimensionless) | 50542 | 3/02/89 | PH-Fld | 6.16E+00 |
| pH (dimensionless) | 50558 | 3/15/89 | PH-Fld | 6.64E+00 |
| pH (dimensionless) | 50572 | 3/29/89 | PH-Fld | 6.30E+00 |
| pH (dimensionless) | 50596 | 4/12/89 | PH-Fld | 6.45E+00 |
| pH (dimensionless) | 50804 | 11/28/89 | PH-Fld | 7.19E+00 |
| pH (dimensionless) | 50014 | 9/11/85 | PH-Fld | 7.60E+00 |
| pH (dimensionless) | 50456 | 9/16/88 | PH-Fld | 6.04E+00 |
| pH (dimensionless) | 50462 | 9/23/88 | PH-Fld | 6.10E+00 |
| pH (dimensionless) | 50468 | 10/10/88 | PH-Fld | 6.04E+00 |
| pH (dimensionless) | 50476 | 10/24/88 | PH-Fld | 5.88E+00 |
| pH (dimensionless) | 50488 | 11/04/88 | PH-Fld | 6.12E+00 |
| pH (dimensionless) | 50498 | 11/18/88 | PH-Fld | 6.49E+00 |
| pH (dimensionless) | 50500 | 12/02/88 | PH-Fld | 7.03E+00 |
| pH (dimensionless) | 50532 | 2/15/89 | PH-Fld | 5.92E+00 |
| pH (dimensionless) | 50544 | 3/02/89 | PH-Fld | 6.33E+00 |
| pH (dimensionless) | 50556 | 3/15/89 | PH-Fld | 6.54E+00 |
| pH (dimensionless) | 50570 | 3/29/89 | PH-Fld | 6.70E+00 |
| pH (dimensionless) | 50593 | 4/11/89 | PH-Fld | 6.20E+00 |
| pH (dimensionless) | 50661 | 10/09/89 | PH-Fld | 6.73E+00 |
| pH (dimensionless) | 50673 | 10/11/89 | PH-Fld | 6.60E+00 |
| pH (dimensionless) | 50071 | 6/19/86 | PH-Fld | 6.45E+00 |
| pH (dimensionless) | 50085 | 7/07/86 | PH-Fld | 6.24E+00 |
| pH (dimensionless) | 51079 | 3/21/90 | PH-Fld | 7.34E+00 |
| Reactivity Cyanide (mg/kg) | 50804E | 11/28/89 | DSPEC | <1.00E+02 |
| Reactivity Cyanide (mg/kg) | 50661E | 10/09/89 | DSPEC | <1.00E+02 |
| Reactivity Cyanide (mg/kg) | 50673E | 10/11/89 | DSPEC | <1.00E+02 |
| Reactivity Cyanide (mg/kg) | 51079E | 3/21/90 | DSPEC | <1.00E+02 |
| Reactivity Sulfide (mg/kg) | 50804E | 11/28/89 | DTITRA | <1.00E+02 |
| Reactivity Sulfide (mg/kg) | 50661E | 10/09/89 | DTITRA | <1.00E+02 |
| Reactivity Sulfide (mg/kg) | 50673E | 10/11/89 | DTITRA | <1.00E+02 |
| Reactivity Sulfide (mg/kg) | 51079E | 3/21/90 | DTITRA | <1.00E+02 |
| Suspended Solids | 50558 | 3/15/89 | SSOLID | <5.00E+03 |
| Suspended Solids | 50572 | 3/29/89 | SSOLID | <5.00E+03 |
| Suspended Solids | 50596 | 4/12/89 | SSOLID | <5.00E+03 |
| Suspended Solids | 50804 | 11/28/89 | SSOLID | <5.00E+03 |
| Suspended Solids | 50556 | 3/15/89 | SSOLID | <5.00E+03 |
| Suspended Solids | 50570 | 3/29/89 | SSOLID | <5.00E+03 |
| Suspended Solids | 50593 | 4/11/89 | SSOLID | <5.00E+03 |
| Suspended Solids | 50661 | 10/09/89 | SSOLID | <5.00E+03 |
| Suspended Solids | 50673 | 10/11/89 | SSOLID | 2.20E+04 |
| Suspended Solids | 51079 | 3/21/90 | SSOLID | <5.00E+03 |

Table B-2. Total Data.
(sheet 44 of 49)

| Constituent | Sample # | Date | Method | Result |
|---|---|---|---|---|
| TDS | 50558 | 3/15/89 | TDS | 5.75E+04 |
| TDS | 50572 | 3/29/89 | TDS | 9.50E+04 |
| TDS | 50596 | 4/12/89 | TDS | 7.60E+04 |
| TDS | 50804 | 11/28/89 | TDS | 5.90E+04 |
| TDS | 50556 | 3/15/89 | TDS | 5.95E+04 |
| TDS | 50570 | 3/29/89 | TDS | 8.25E+04 |
| TDS | 50593 | 4/11/89 | TDS | 7.75E+04 |
| TDS | 50661 | 10/09/89 | TDS | 7.80E+04 |
| TDS | 50673 | 10/11/89 | TDS | 6.20E+04 |
| TDS | 51079 | 3/21/90 | TDS | 3.40E+04 |
| Temperature (°C) | 50053 | 5/31/86 | TEMP-Fld | 2.42E+01 |
| Temperature (°C) | 50113 | 8/18/86 | TEMP-Fld | 2.85E+01 |
| Temperature (°C) | 50149 | 10/03/86 | TEMP-Fld | 2.37E+01 |
| Temperature (°C) | 50214 | 1/06/87 | TEMP-Fld | 1.68E+01 |
| Temperature (°C) | 50454 | 9/16/88 | TEMP-Fld | 1.92E+01 |
| Temperature (°C) | 50460 | 9/23/88 | TEMP-Fld | 2.40E+01 |
| Temperature (°C) | 50470 | 10/10/88 | TEMP-Fld | 2.53E+01 |
| Temperature (°C) | 50478 | 10/24/88 | TEMP-Fld | 2.31E+01 |
| Temperature (°C) | 50490 | 11/04/88 | TEMP-Fld | 1.92E+01 |
| Temperature (°C) | 50502 | 12/02/88 | TEMP-Fld | 1.59E+01 |
| Temperature (°C) | 50512 | 12/16/88 | TEMP-Fld | 1.61E+01 |
| Temperature (°C) | 50514 | 12/16/88 | TEMP-Fld | 1.84E+01 |
| Temperature (°C) | 50534 | 2/15/89 | TEMP-Fld | 1.64E+01 |
| Temperature (°C) | 50542 | 3/02/89 | TEMP-Fld | 4.72E+01 |
| Temperature (°C) | 50558 | 3/15/89 | TEMP-Fld | 1.70E+01 |
| Temperature (°C) | 50572 | 3/29/89 | TEMP-Fld | 1.72E+01 |
| Temperature (°C) | 50596 | 4/12/89 | TEMP-Fld | 2.10E+01 |
| Temperature (°C) | 50804 | 11/28/89 | TEMP-Fld | 1.50E+01 |
| Temperature (°C) | 50014 | 9/11/85 | TEMP-Fld | 2.14E+01 |
| Temperature (°C) | 50456 | 9/16/88 | TEMP-Fld | 1.99E+01 |
| Temperature (°C) | 50462 | 9/23/88 | TEMP-Fld | 1.99E+01 |
| Temperature (°C) | 50468 | 10/10/88 | TEMP-Fld | 2.28E+01 |
| Temperature (°C) | 50476 | 10/24/88 | TEMP-Fld | 2.15E+01 |
| Temperature (°C) | 50488 | 11/04/88 | TEMP-Fld | 1.99E+01 |
| Temperature (°C) | 50498 | 11/18/88 | TEMP-Fld | 2.01E+01 |
| Temperature (°C) | 50500 | 12/02/88 | TEMP-Fld | 2.13E+01 |
| Temperature (°C) | 50532 | 2/15/89 | TEMP-Fld | 2.00E+01 |
| Temperature (°C) | 50544 | 3/02/89 | TEMP-Fld | 4.70E+01 |
| Temperature (°C) | 50556 | 3/15/89 | TEMP-Fld | 1.61E+01 |
| Temperature (°C) | 50570 | 3/29/89 | TEMP-Fld | 1.64E+01 |
| Temperature (°C) | 50593 | 4/11/89 | TEMP-Fld | 1.83E+01 |
| Temperature (°C) | 50661 | 10/09/89 | TEMP-Fld | 2.13E+01 |
| Temperature (°C) | 50673 | 10/11/89 | TEMP-Fld | 2.26E+01 |
| Temperature (°C) | 50071 | 6/19/86 | TEMP-Fld | 4.08E+01 |
| Temperature (°C) | 50085 | 7/07/86 | TEMP-Fld | 2.28E+01 |
| Temperature (°C) | 51079 | 3/21/90 | TEMP-Fld | 1.73E+01 |

Table B-2. Total Data.
(sheet 45 of 49)

| Constituent | Sample # | Date | Method | Result |
|---|---|---|---|---|
| TOC | 50053 | 5/31/86 | TOC | 2.98E+03 |
| TOC | 50113 | 8/18/86 | TOC | 3.48E+03 |
| TOC | 50149 | 10/03/86 | TOC | 2.45E+03 |
| TOC | 50214 | 1/06/87 | TOC | <8.77E+02 |
| TOC | 50454 | 9/16/88 | TOC | 1.30E+03 |
| TOC | 50460 | 9/23/88 | TOC | 1.20E+03 |
| TOC | 50470 | 10/10/88 | TOC | 1.90E+03 |
| TOC | 50478 | 10/24/88 | TOC | 2.00E+03 |
| TOC | 50490 | 11/04/88 | TOC | 1.20E+03 |
| TOC | 50502 | 12/02/88 | TOC | <7.00E+02 |
| TOC | 50512 | 12/16/88 | TOC | <8.00E+02 |
| TOC | 50514 | 12/16/88 | TOC | 1.60E+03 |
| TOC | 50534 | 2/15/89 | TOC | <9.00E+02 |
| TOC | 50542 | 3/02/89 | TOC | <9.00E+02 |
| TOC | 50558 | 3/15/89 | TOC | <9.00E+02 |
| TOC | 50572 | 3/29/89 | TOC | <1.80E+03 |
| TOC | 50596 | 4/12/89 | TOC | <1.60E+03 |
| TOC | 50804 | 11/28/89 | TOC | <1.00E+03 |
| TOC | 50014 | 9/11/85 | TOC | <9.80E+02 |
| TOC | 50456 | 9/16/88 | TOC | 1.20E+03 |
| TOC | 50462 | 9/23/88 | TOC | 1.30E+03 |
| TOC | 50468 | 10/10/88 | TOC | 1.00E+03 |
| TOC | 50476 | 10/24/88 | TOC | 1.00E+03 |
| TOC | 50488 | 11/04/88 | TOC | 1.10E+03 |
| TOC | 50498 | 11/18/88 | TOC | <9.00E+02 |
| TOC | 50500 | 12/02/88 | TOC | 1.20E+03 |
| TOC | 50532 | 2/15/89 | TOC | <8.00E+02 |
| TOC | 50544 | 3/02/89 | TOC | <9.00E+02 |
| TOC | 50556 | 3/15/89 | TOC | <7.00E+02 |
| TOC | 50570 | 3/29/89 | TOC | <1.10E+03 |
| TOC | 50593 | 4/11/89 | TOC | <1.40E+03 |
| TOC | 50661 | 10/09/89 | TOC | <1.30E+03 |
| TOC | 50673 | 10/11/89 | TOC | <1.90E+03 |
| TOC | 50071 | 6/19/86 | TOC | 3.01E+03 |
| TOC | 50085 | 7/07/86 | TOC | 1.81E+03 |
| TOC | 51079 | 3/21/90 | TOC | 1.10E+03 |
| Total Carbon | 50804 | 11/28/89 | TC | 1.19E+04 |
| Total Carbon | 50661 | 10/09/89 | TC | 1.30E+04 |
| Total Carbon | 50673 | 10/11/89 | TC | 1.20E+04 |
| Total Carbon | 51079 | 3/21/90 | TC | 1.30E+04 |
| TOX (as Cl) | 50053 | 5/31/86 | TOX | 1.75E+02 |
| TOX (as Cl) | 50113 | 8/18/86 | TOX | 1.55E+02 |
| TOX (as Cl) | 50149 | 10/03/86 | TOX | <1.00E+02 |
| TOX (as Cl) | 50214 | 1/06/87 | LTOX | 8.26E+01 |
| TOX (as Cl) | 50454 | 9/16/88 | LTOX | 9.20E+01 |
| TOX (as Cl) | 50460 | 9/23/88 | LTOX | 9.40E+01 |

Table B-2. Total Data.
(sheet 46 of 49)

| Constituent | Sample # | Date | Method | Result |
|---|---|---|---|---|
| TOX (as Cl) | 50470 | 10/10/88 | LTOX | 9.70E+01 |
| TOX (as Cl) | 50478 | 10/24/88 | LTOX | 6.50E+01 |
| TOX (as Cl) | 50490 | 11/04/88 | LTOX | 6.10E+01 |
| TOX (as Cl) | 50502 | 12/02/88 | LTOX | 5.80E+01 |
| TOX (as Cl) | 50512 | 12/16/88 | LTOX | 4.60E+01 |
| TOX (as Cl) | 50514 | 12/16/88 | LTOX | 5.20E+01 |
| TOX (as Cl) | 50534 | 2/15/89 | LTOX | 4.30E+01 |
| TOX (as Cl) | 50542 | 3/02/89 | LTOX | 4.20E+01 |
| TOX (as Cl) | 50558 | 3/15/89 | LTOX | 4.90E+01 |
| TOX (as Cl) | 50572 | 3/29/89 | LTOX | 8.80E+01 |
| TOX (as Cl) | 50596 | 4/12/89 | LTOX | 8.30E+01 |
| TOX (as Cl) | 50804 | 11/28/89 | LTOX | 1.11E+02 |
| TOX (as Cl) | 50014 | 9/11/85 | TOX | <2.84E+01 |
| TOX (as Cl) | 50456 | 9/16/88 | LTOX | 6.70E+01 |
| TOX (as Cl) | 50462 | 9/23/88 | LTOX | 8.90E+01 |
| TOX (as Cl) | 50468 | 10/10/88 | LTOX | 9.00E+01 |
| TOX (as Cl) | 50476 | 10/24/88 | LTOX | 6.00E+01 |
| TOX (as Cl) | 50488 | 11/04/88 | LTOX | 8.10E+01 |
| TOX (as Cl) | 50498 | 11/18/88 | LTOX | 8.20E+01 |
| TOX (as Cl) | 50500 | 12/02/88 | LTOX | 5.60E+01 |
| TOX (as Cl) | 50532 | 2/15/89 | LTOX | 4.00E+01 |
| TOX (as Cl) | 50544 | 3/02/89 | LTOX | 4.20E+01 |
| TOX (as Cl) | 50556 | 3/15/89 | LTOX | 5.50E+01 |
| TOX (as Cl) | 50570 | 3/29/89 | LTOX | 8.20E+01 |
| TOX (as Cl) | 50593 | 4/11/89 | LTOX | 8.40E+01 |
| TOX (as Cl) | 50661 | 10/09/89 | LTOX | 1.27E+02 |
| TOX (as Cl) | 50673 | 10/11/89 | LTOX | 1.33E+02 |
| TOX (as Cl) | 50071 | 6/19/86 | TOX | <2.63E+01 |
| TOX (as Cl) | 50085 | 7/07/86 | TOX | <1.44E+01 |
| TOX (as Cl) | 51079 | 3/21/90 | LTOX | 8.40E+01 |
| $^{241}$Am (pCi/L) | 50804 | 11/28/89 | AEA | 3.96E-02 |
| $^{241}$Am (pCi/L) | 50661 | 10/09/89 | AEA | 2.95E+00 |
| $^{241}$Am (pCi/L) | 50673 | 10/11/89 | AEA | 7.96E-02 |
| $^{241}$Am (pCi/L) | 51079 | 3/21/90 | AEA | 7.44E-02 |
| $^{14}$C (pCi/L) | 50804 | 11/28/89 | LSC | 5.59E+00 |
| $^{14}$C (pCi/L) | 50661 | 10/09/89 | LSC | <1.49E+00 |
| $^{14}$C (pCi/L) | 50673 | 10/11/89 | LSC | <1.80E+00 |
| $^{14}$C (pCi/L) | 51079 | 3/21/90 | LSC | <1.55E+00 |
| $^{3}$H (pCi/L) | 50661 | 10/09/89 | LSC | 2.90E+02 |
| $^{3}$H (pCi/L) | 50673 | 10/11/89 | LSC | <9.74E+01 |
| $^{3}$H (pCi/L) | 51079 | 3/21/90 | LSC | <1.37E+02 |
| $^{238}$Pu (pCi/L) | 50804 | 11/28/89 | AEA | 4.17E-03 |
| $^{238}$Pu (pCi/L) | 50661 | 10/09/89 | AEA | 4.31E-02 |
| $^{238}$Pu (pCi/L) | 50673 | 10/11/89 | AEA | 1.53E-02 |
| $^{238}$Pu(pCi/L) | 51079 | 3/21/90 | AEA | <1.75E-03 |
| $^{239,240}$Pu (pCi/L) | 50804 | 11/28/89 | AEA | 2.79E-02 |

Table B-2. Total Data.
(sheet 47 of 49)

| Constituent | Sample # | Date | Method | Result |
|---|---|---|---|---|
| $^{239,240}$Pu (pCi/L) | 50661 | 10/09/89 | AEA | 7.42E-01 |
| $^{239,240}$Pu (pCi/L) | 50673 | 10/11/89 | AEA | 7.70E-02 |
| $^{239,240}$Pu (pCi/L) | 51079 | 3/21/90 | AEA | 3.78E-02 |
| Radium Total (pCi/L) | 50804 | 11/28/89 | Alpha-Ra | 1.74E-01 |
| Radium Total (pCi/L) | 50661 | 10/09/89 | Alpha-Ra | <1.05E-01 |
| Radium Total (pCi/L) | 51079 | 3/21/90 | Alpha-Ra | <4.54E-03 |
| $^{90}$Sr (pCi/L) | 50804 | 11/28/89 | Beta | <9.50E-02 |
| $^{90}$Sr (pCi/L) | 50661 | 10/09/89 | Beta | 2.93E-01 |
| $^{90}$Sr (pCi/L) | 50673 | 10/11/89 | Beta | <7.30E-03 |
| $^{90}$Sr (pCi/L) | 51079 | 3/21/90 | Beta | <9.93E-02 |
| $^{234}$U (pCi/L) | 50804 | 11/28/89 | AEA | 1.14E-01 |
| $^{234}$U (pCi/L) | 50661 | 10/09/89 | AEA | 9.08E-02 |
| $^{234}$U (pCi/L) | 50673 | 10/11/89 | AEA | 6.20E-02 |
| $^{234}$U (pCi/L) | 51079 | 3/21/90 | AEA | 1.55E-01 |
| $^{238}$U (pCi/L) | 50804 | 11/28/89 | AEA | 8.90E-02 |
| $^{238}$U (pCi/L) | 50661 | 10/09/89 | AEA | 1.28E-01 |
| $^{238}$U (pCi/L) | 50673 | 10/11/89 | AEA | 5.97E-02 |
| $^{238}$U (pCi/L) | 51079 | 3/21/90 | AEA | 1.30E-01 |

NOTES:

Sample# is the number of the sample. See chapter three for corresponding chain-of-custody number.

Date is the sampling date.

Results are in ppb (parts per billion) unless otherwise indicated.

The following table lists the methods that are coded in the method column.

| Code | Analytical Method | Reference |
|---|---|---|
| ABN | Semivolatile Organics (GC/MS) | USEPA-8270 |
| AEA | $^{241}$Am | UST-20Am01 |
| AEA | Curium Isotopes | UST-20Am/Cm01 |
| AEA | Plutonium Isotopes | UST-20Pu01 |
| AEA | Uranium Isotopes | UST-20U01 |
| ALPHA | Alpha Counting | EPA-680/4-75/1 |
| ALPHA-Ra | Total Radium Alpha Counting | ASTM-D2460 |
| BETA | Beta Counting | EPA-680/4-75/1 |
| BETA | $^{90}$Sr | UST-20Sr02 |
| COLIF | Coliform Bacteria | USEPA-9131 |
| COLIFMF | Coliform Bacteria (Membrane Filter) | USEPA-9132 |
| COND-Fld | Conductivity-Field | ASTM-D1125A |
| COND-Lab | Conductivity-Laboratory | ASTM-D1125A |
| CVAA | Mercury | USEPA-7470 |
| CVAA/M | Mercury-Mixed Matrix | USEPA-7470 |
| DIGC | Direct Aqueous Injection (GC) | UST-70DIGC |
| DIMS | Direct Aqueous Injection (GC/MS) | "USEPA-8240" |

Table B-2. Total Data.
(sheet 48 of 49)

| Code | Analytical Method | Reference |
|---|---|---|
| DSPEC | Reactive Cyanide (Distillation, Spectroscopy) | USEPA-CHAPTER 7 |
| DTITRA | Reactive Sulfide (Distillation, Titration) | USEPA-CHAPTER 7 |
| FLUOR | Uranium (Fluorometry) | ASTM-D2907-83 |
| GEA | Gamma Energy Analysis Spectroscopy | ASTM-D3649-85 |
| GFAA | Arsenic (AA, Furnace Technique) | USEPA-7060 |
| GFAA | Lead (AA, Furnace Technique) | USEPA-7421 |
| GFAA | Selenium (AA, Furnace Technique) | USEPA-7740 |
| GFAA | Thallium (AA, Furnace Technique) | USEPA-7841 |
| IC | Ion Chromatography | EPA-600/4-84-01 |
| ICP | Atomic Emission Spectroscopy (ICP) | USEPA-6010 |
| ICP/M | Atomic Emission Spectroscopy (ICP)-Mixed Matrix | USEPA-6010 |
| IGNIT | Pensky-Martens Closed-Cup Ignitability | USEPA-1010 |
| ISE | Fluoride-Low Detection Limit | ASTM-D1179-80-B |
| ISE | Ammonium Ion | ASTM-D1426-D |
| LALPHA | Alpha Activity-Low Detection Limit | EPA-680/4-75/1 |
| LEPD | $^{129}I$ | UST-20I02 |
| LSC | $^{14}C$ | UST-20C01 |
| LSC | Tritium | UST-20H03 |
| LTOX | Total Organic Halides-Low Detection Limit | USEPA-9020 |
| PH-Fld | pH-Field | USEPA-9040 |
| PH-Lab | pH-Laboratory | USEPA-9040 |
| SPEC | Total and Amenable Cyanide (Spectroscopy) | USEPA-9010 |
| SPEC | Hydrazine-Low Detection Limit (Spectroscopy) | ASTM-D1385 |
| SSOLID | Suspended Solids | SM-208D |
| TC | Total Carbon | USEPA-9060 |
| TDS | Total Dissolved Solids | SM-208B |
| TEMP-Fld | Temperature-Field | Local |
| TITRA | Alkalinity-Method B (Titration) | ASTM-D1067B |
| TITRA | Sulfides (Titration) | USEPA-9030 |
| TOC | Total Organic Carbon | USEPA-9060 |
| TOX | Total Organic Halides | USEPA-9020 |
| VOA | Volatile Organics (GC/MS) | USEPA-8240 |

Analytical Method Acronyms:
- atomic absorption spectroscopy (AA)
- gas chromatography (GC)
- mass spectrometry (MS)
- inductively-coupled plasma spectroscopy (ICP)

References:
- ASTM - "1986 Annual Book of ASTM Standards", American Society for Testing and Materials, Philadelphia, Pennsylvania.
- EPA - Various methods of the U.S. Environmental Protection Agency, Washington, D.C.

Table B-2. Total Data.
(sheet 49 of 49)

UST - Methods of the United States Testing Company, Incorporated, Richland, Washington.

SM - "Standard Methods for the Examination of Water and Wastewater", 16th ed., American Public Health Association, American Water Works Association and Water Pollution Control Federation, Washington, D.C.

USEPA- "Test Methods for Evaluating Solid Waste Physical/Chemical Methods", 3rd ed., SW-846, U.S. Environmental Protection Agency, Washington, D.C.

Table B-3. Summary of 200 West Area Raw Water and Sanitary Water Data. (sheet 1 of 2)

| Constituent/Parameter [all ppb, exceptions noted] | Raw Water[a] (1986-1987) N[d] | AVG | STD DEV | Sanitary Water[b] (1985-1988) N | AVG | STD DEV | 2724-W Laundry Sanitary Water[c] (1989) N | AVG | STD DEV |
|---|---|---|---|---|---|---|---|---|---|
| Alkalinity (Method B) | | | | 4 | 5.45E+04 | 5.78E+02 | | | |
| Aluminum | 5 | 1.78E+02 | 6.31E+01 | | | | | | |
| Arsenic | | | | 4 | <5.00E+00 | NA | | | |
| Arsenic (EP Toxic) | | | | | | | 4 | <5.00E+02 | NA |
| Barium | 5 | 2.94E+01 | 1.52E+00 | 4 | *1.15E+02 | 1.91E+01 | 4 | 2.90E+01 | 1.41E+00 |
| Barium (EP Toxic) | | | | | | | 4 | <1.00E+03 | NA |
| Boron | | | | | | | 4 | 1.77E+01 | 1.00E+01 |
| Cadmium | | | | 4 | <5.00E-01 | NA | | | |
| Cadmium (EP Toxic) | | | | | | | 4 | <1.00E+02 | NA |
| Calcium | 5 | 1.76E+04 | 2.71E+03 | | | | 4 | 1.87E+04 | 2.94E+02 |
| Chromium | | | | 4 | <1.00E+01 | NA | | | |
| Chromium (EP Toxic) | | | | | | | 4 | <5.00E+02 | NA |
| Chloride | 5 | 8.25E+02 | 1.99E+02 | 4 | 2.35E+03 | 8.66E+02 | 4 | 2.92E+03 | 1.71E+02 |
| Conductivity-field (μS) | 5 | 9.40E+01 | 4.65E+01 | | | | 4 | 1.45E+02 | 1.60E+01 |
| Copper | 5 | 1.52E+01 | 7.96E+00 | 4 | <5.00E+01 | NA | | | |
| Color (units) | | | | 4 | *6.25E+00 | 2.50E+00 | | | |
| Ignitability (deg F) | | | | | | | 4 | 2.11E+02 | 2.00E+00 |
| Iron | 5 | 1.14E+02 | 1.44E+02 | 4 | *2.50E+02 | 2.68E+02 | 4 | 3.27E+01 | 3.40E+00 |
| Fluoride | 1 | 9.30E+01 | NA | 4 | *1.08E+02 | 1.50E+01 | 4 | 1.28E+02 | 8.68E+00 |
| Lead | 3 | 8.13E+00 | 5.42E+00 | 4 | <5.00E+00 | NA | | | |
| Lead (EP Toxic) | | | | | | | 4 | <5.00E+02 | NA |
| Magnesium | 5 | 4.12E+03 | 5.41E+02 | | | | 4 | 4.35E+03 | 1.59E+02 |
| Manganese | 5 | 1.68E+01 | 1.99E+01 | 4 | <1.00E+01 | NA | | | |
| Mercury | | | | 4 | <5.00E-01 | NA | | | |
| Mercury (EP Toxic) | | | | | | | 4 | <2.00E+01 | NA |
| Nitrate (as N) | | | | 4 | *8.50E+01 | 4.12E+01 | 4 | 5.00E+02 | 0.00E+00 |
| pH (dimensionless) | 5 | 6.52E+00 | 1.04E+00 | | | | 4 | 7.10E+00 | 3.40E-01 |
| Potassium | 5 | 7.88E+02 | 4.25E+01 | | | | 4 | 7.28E+02 | 5.44E+01 |
| Reactivity Cyanide (mg/kg) | | | | | | | 4 | <1.00E+02 | NA |
| Reactivity Sulfide (mg/kg) | | | | | | | 4 | <1.00E+02 | NA |
| Selenium | | | | 4 | <5.00E+00 | NA | | | |
| Selenium (EP Toxic) | | | | | | | 4 | <5.00E+02 | NA |
| Silicon | | | | | | | 4 | 2.14E+03 | 1.02E+01 |
| Silver | | | | 4 | <1.00E+01 | NA | 4 | 1.00E+01 | 0.00E+00 |
| Silver (EP Toxic) | | | | | | | 4 | <5.00E+02 | NA |

Table B-3. Summary of 200 West Area Raw Water and Sanitary Water Data. (sheet 2 of 2)

| Constituent/Parameter [all ppb, exceptions noted] | Raw Water[a] (1986-1987) | | | Sanitary Water[b] (1985-1988) | | | 2724-W Laundry Sanitary Water[c] (1989) | | |
|---|---|---|---|---|---|---|---|---|---|
| | N[d] | AVG | STD DEV | N | AVG | STD DEV | N | AVG | STD DEV |
| Sodium | 5 | 2.23E+03 | 9.28E+01 | 4 | 2.20E+03 | 1.15E+02 | 4 | 2.05E+03 | 1.28E+02 |
| Strontium | | | | | | | 4 | 9.47E+01 | 3.00E+00 |
| Sulfate | 5 | 9.83E+03 | 1.40E+03 | 4 | 1.47E+04 | 1.16E+03 | 4 | 1.40E+04 | 4.44E+02 |
| Sulfide | 5 | 1.00E+03 | 8.63E-05 | | | | | | |
| Temperature-field (C) | 5 | 1.48E+01 | 6.80E+00 | | | | 4 | 1.31E+01 | 7.40E+00 |
| Total Carbon | | | | | | | 4 | 1.51E+04 | 1.71E+02 |
| TOC | 5 | 1.61E+03 | 4.76E+02 | | | | | | |
| TOX (μg (Cl)/L) | 4 | 1.44E+01 | 8.30E+00 | | | | 4 | 1.42E+02 | 1.30E+01 |
| TDS | | | | 4 | 7.95E+01 | 1.28E+01 | 4 | 5.37E+04 | 3.06E+04 |
| Trichloromethane | | | | | | | 4 | 2.82E+01 | 7.94E+00 |
| Uranium | 5 | 5.21E-01 | 1.80E-01 | | | | 3 | 2.54E-01 | 9.46E-02 |
| Zinc | 5 | 7.60E+00 | 8.94E-01 | 4 | *1.03E+02 | 4.50E+01 | 4 | 5.85E+01 | 3.12E+01 |
| Alpha Activity | 5 | 2.34E+00 | 3.49E+00 | | | | | | |
| Beta Activity | 5 | 1.05E+01 | 1.47E+01 | | | | 3 | 4.33E+00 | 3.86E+00 |

NOTES: Averages denoted by an asterisk include a mix of above- and below-detection limit in computations when the actual values are below the detection limit.

See companion table for inorganic detection limits as compiled from Hanford Environmental Health Foundation.

[a]Compiled from "Substance Toxicity Evaluation of Waste Data Base" provided by F. M. Jungfleisch (this data is an update of the data presented in WHC 1988, *Preliminary Evaluation of Hanford Liquid Discharges*), Westinghouse Hanford Company, Richland, Washington.

[b]Compiled from HEHF, 1986, *Hanford Sanitary Water Quality Surveillance, CY 1985*, HEHF-55, Hanford Environmental Health Foundation, Environmental Health Sciences, Richland, Washington; HEHF-59; HEHF-71; and HEHF-74 (corresponding reports for CY 1986, 1987, and 1988).

[c]Data are from sampling campaign conducted October 1, 1989, to March 30, 1990, in support of Stream Specific Reports.

[d]N is defined as the number of test results available for a particular analyte; N may reflect both single and multiple data sets.

ppb = parts per billion.
TOC = total organic carbon.
TOX = total organic halides.
μS = microsiemen.
μg = microgram.

This page intentionally left blank.