AR TARGET SHEET

The following document was too large to scan as one unit; therefore, it has been broken down into sections.

DOCUMENT#	BNFL-5193-RCRA-01
TITLE	River Protection Project Waste Treatment Plant Dangerous Waste Permit Application (5 volumes)
EDMC#	0053076
SECTION	4 of 11

LP System 130: LAW Melter Feed Evaporation

1. Introduction and Scope

The primary purpose of the low activity waste (LAW) Melter Feed Evaporation System (System LP-130) is to concentrate the feed to the LAW melters. This document describes the process that will be used to concentrate the LAW feed to the LAW Melter Feed Preparation System (System LV-110).

Refer to process flow diagram (PFD) – *LAW Melter Feed Evaporation*, (System LP-130, Drawing No. DWG-W375LP-PR00008) for LP System 130.

2. Process Description

The LAW Melter Feed Evaporators are continuous, forced circulation, vacuum evaporation systems. This description of the evaporation system has been divided into the following subsections: evaporator feed receipt, evaporator operation and evaporator overheads system.

2.1. Typical Waste Stream Receiving

The treated LAW from the Tc Ion Exchange System, System LP-330 will be transferred to the LAW melter feed evaporator system. The treated LAW collection vessels will be configured in such a way that one will be filling, one will be in the process of being sampled, and one will be feeding the LAW melter feed evaporator.

Submerged bed scrubber (SBS) purge liquor from the LAW Vitrification Off-gas Effluent System (System LV-230) will be received in the LPP Plant Wash Vessel (V45009) prior to being fed to the evaporator.

High active effluent will be received from the LAW Pretreatment Effluent Collection System (System LP-510/550) to the LAW Melter Evaporator system.

2.2. Evaporator Operation

After the LAW feed recirculating within the evaporator system is sufficiently concentrated, it is pumped out of the evaporator system using the concentrate off-take RFD's. The concentrate off-take RFD's are situated in the suction line of the recirculation pump at the lowest point in the evaporator recirculation loop. The concentrated LAW stream is discharged into either the LAW melter feed evaporator concentrate transfer breakpot or the LAW melter feed evaporator concentrate transfer pulsepot which prevents siphoning of concentrate product from the evaporator to the LAW buffer vessels (LAW Melter Feed Lag Storage System, LP-140). If the concentration of the concentrated liquor is too low, the liquor is recycled back to the evaporator feed breakpot (V41014) via the LAW melter feed transfer pumps (V41013 A/B). If over-concentrated, process water can be added to the concentrated liquor using the vessel wash rings.

2.3. Evaporator Overheads System

The overheads first pass through the primary condenser where the majority of the water driven off in the evaporator is condensed. A two-stage steam ejector system (W41011A/B and W41012A/B) maintains a vacuum in the evaporator. Vapor from the steam ejectors is condensed in an inter-condenser and an after-condenser. The condensate from the primary condenser, inter-condenser, and after-condenser is sent

to the process condensate pot (V41013). Condensate from the primary condenser is monitored continuously for activity. If the activity in the condensate is within specifications for transfer to the Process Condensate Collection System (System LP-510), the clean condensate is transferred to the process condensate vessel (V45028A/B/C) by the process condensate transfer pump (P41047A/B) through the clean process condensate routing valve. In case of activity breakthrough, contaminated process condensate which is not within LERF/ETC specifications is recycled to the treated LAW collection vessels (V43110C, System LP-330) by the condensate transfer pump through the contaminated process condensate routing valve and an evaporator shutdown is initiated. Non-condensable gases, which have been extracted from the evaporator system, pass to the LAW Pretreatment Vessel Vent System (System LP-540) via the demister.

3. Functions

3.1. Functional Requirements

To achieve the primary function, the LAW Melter Feed Evaporation System contains equipment that performs the following operational functions:

- Evaporating waste
- Condensing vapor and venting non-condensable gases
- Transferring liquors
- Receiving waste

These operational functions accomplish the primary function, reducing the downstream volume. The operational functions can include one or more of the following work activities:

- Contain the waste
- Monitor/control system
- Process/evaporate waste

Table 1 presents a description of the operational functions and associated work activities.

3.2. Functions

This system will include the following functions:

- Welded construction of vessels will have minimal flanged joints.

- Vessels will have level instrumentation with high alarm and trip functions to minimize the chances of overflowing.

- Vessels will be designated overflow route designed to handle the largest possible flowrate into the vessel. The overflows are as follows:

  i) V41013 – overflows to the plant wash vessel (V45009, System LP-510/550)
  ii) V41014 – overflows to one of the evaporator feed vessels (V43110A, System LP-330)
  iii) V41011 – overflows to V11013

- In case of an incell equipment failure, the waste will be contained within the secondary containment (C5 cell) from where there is an engineered route back into the process.

- Detection of leak via cell sump instrumentation and the provision to remove waste from the sump.

- Continuous monitoring of the steam condensate from the reboiler for process liquor breakthrough.

- The condensate from the primary condenser will be continuously monitored for activity breakthrough from the evaporator.

- A cell liner wash system for decontaminating the process cell will be provided. The process cell will be lined with stainless steel to contain the largest credible leak and coated with a protective material on the unlined wall.

- Monitoring the pressure drop across the demister in the separator vessel (V41011), by pressure instrumentation. This will detect blockage or passing of the demister.

- Controlling the vacuum in the separator vessel by a controlled air inbleed into the suction side of the primary vacuum ejector. A pressure instrument on the separator vessel will modulate the air inbleed valve. Primary pressure measurement is for the sub-atmospheric control of the vessel. A second pressure measurement would provide information and control for atmospheric and elevated pressure.

4. Normal Operations

4.1. Description of Normal Operations

Treated LAW is fed daily to the LAW melter feed evaporator feed breakpot (V41014) from one of the three treated LAW collection vessels (V43110A/B/C in system LP-330). SBS purge liquor is fed to the LAW melter feed evaporator feed pulsepot (V41014) from LAW vitrification via the LPP Plant Wash Vessel (V45009). SBS purge liquor is fed to V45009 daily as a single batch. Treated LAW, high active effluent from LAW Pretreatment Effluent Collection System (System LP-510/550) and SBS purge liquor are fed to V41014 separately during an evaporator operating cycle.

The LAW melter evaporator feed breakpot (V41014) drains by gravity through a lutepot (V41053) and the feed enters the evaporator recirculation loop on the suction side of the recirculation pump (P41011). The pump discharges liquor to the LAW melter feed evaporator reboiler. When the recirculating liquor reaches the separator vessel, flash evaporation occurs due to the reduced pressure in the vessel. This reduced pressure lowers the boiling point of the liquor. This reduction in boiling point reduces corrosion of the evaporator by chlorides, which may be present in the evaporator feed.

The evaporator is operated in a semi-batch mode of operation. The evaporation occurs continuously, but the feed to the recirculation loop and product offtake from the recirculation loop occur batchwise. This is accomplished by controlling the level in the evaporator separator vessel between a high and low setpoint. When the level falls to the low setpoint, the routing valve from LP-510/550, or the evaporator feed RFD in the vessel feeding the evaporator, transfers evaporator feed into the recirculation loop until the level in the separator vessel reaches the high level setpoint. The evaporator boils the liquor until either the required product density or the low level setpoint is reached. If the required product density is reached, the product offtake RFD is operated. Concentrate product is pumped from the evaporator recirculation loop to LAW buffer vessels (V41001A/B, System LP-140) until the low level setpoint in the separator

vessel is reached. Once the product offtake is complete, the feed RFD's are started to refill the evaporator recirculation loop back to the high level control point in the separator vessel. If the low level setpoint in the separator vessel is reached without attaining the required evaporator product density the feed RFD's are started again to refill the evaporator recirculation loop to the high level setpoint in the separator vessel. This mode of operation allows the evaporator to handle a wide range of throughputs and evaporator feed concentrations. It enables the evaporators to run plant wash liquors through the process by boiling off the water fraction. The pressure in the separator vessel is maintained by a controlled inbleed of air into the suction side of the primary vacuum ejector. If the pressure in the separator vessel rises, the air inbleed is reduced to allow more vapor to be drawn from the separator vessel, reducing the pressure.

The overheads from the evaporator are routed to the primary condenser where the majority of the moisture is removed. The non-condensables from the primary condenser pass to the primary vacuum ejector which maintains a constant depression on its suction side. The motive steam from the primary vacuum ejector and the non-condensables pass through the intercondenser where the ejector steam is condensed. The non-condensables from the intercondenser are routed to the secondary vacuum ejector which maintains a constant depression on its suction side. The motive steam from the secondary vacuum ejector is condensed out in the aftercondenser (E41013). The non-condensables from the aftercondenser pass through the demister (V41015), which removes entrained droplets from the aftercondenser prior to the non-condensables going to the vessel vent system. The condensate from the primary condenser, the intercondenser, the aftercondenser and the disentrained droplets from the demister are all routed independently to the LAW feed evaporator process condensate pot (V41013). This provides a holdup for the process condensate, which is the measurement time of the radiation monitor on the condensate line from the primary condenser. This radiation monitor detects breakthrough of activity from the evaporator separator vessel (V41011). In case of no activity being detected in the primary condenser condensate, the process condensate pot is emptied to the process condensate vessels (V45028A/B/C). The condensate transfer is carried out by the condensate transfer pump and the clean condensate transfer routing valve. The operation of the valves is controlled by the level in the process condensate pot and the primary condenser condensate radiation monitor.

In the event of activity breakthrough being detected, a LAW melter feed evaporator system shutdown is initiated and the contents of the process condensate pot are transferred to the treated LAW collection vessel C (V43110C, System LP-330) through the contaminated process condensate routing valve.

5. Safety and Interlock Requirements

5.1. LAW Melter Feed Evaporator System Shutdown

The following control actions are required to shutdown the LAW Melter Feed Evaporator:

- Stop steam flow to reboiler.
- Stop feed flow to the evaporator.
- Stop product offtake from evaporator.
- Stop vacuum ejector steam supplies.
- Stop cooling water flow to the condensers

The evaporator recirculation pump will not automatically be stopped in case of a LAW melter feed evaporator shutdown. This is to prevent settling of entrained solids within the recirculation loop, which may cause a blockage.

The following plant conditions will initiate a LAW Melter Feed Evaporator System shutdown:

- Detection of breakthrough in the steam condensate returns from the reboiler (E41011)
- Detection of breakthrough in the process condensate from primary condenser (E41012)
- Detection of a leak in any of the process equipment within the system, indicated by cell sump level instrumentation

5.2. LAW Melter Feed Evaporator Trip Actions

Table 2 shows the LAW melter feed evaporator trip actions.

Table 1. Description of the Operational Functions and Work Activities for LAW Melter Evaporator Feed System

Operational Function	Work Activities	Functional Description
Receiving Waste	Process	System sized to receive treated LAW from V43110A/B/C (LP-330), SBS purge liquor from V45009, and high active effluent from V45009, V45028A/B/C and V45018 (LP-510/550). *Equipment* – V41014
	Contain	Sump level instrument detects leaks into cell.
	Monitor	Level on V41053, to prevent and detect overfill.
Transferring Liquor	Process	Pump process waste from LAW collection and the SBS purge liquor from LAW Pretreatment Effluents to the LAW melter feed evaporator feed breakpot (V41014) using pumps and gravity feed through the LAW melter feed evaporator lute to the recirculation loop. *Equipment* – P43048/49/50A/B, P45307 A/B, P45039A/B, P45012A/B
	Monitor	Monitor level in lutepot (V41053) to detect blockage and loss of liquid seal in lute, i.e. loss of barrier between atmospheric and vacuum system.
Evaporating Waste	Process	System sized to accommodate treated LAW from System LP-330 and SBS purge liquor and effluent from System LP-510/550. *Equipment* – E41011, V41011
	Monitor	Density, level, temperature, pressure and differential pressure instruments on V41011. Steam supply to E41011.
Transferring Liquor		LAW concentrate product from recirculation loop is pumped to the LAW melter feed evaporator concentrate transfer breakpot or pulsepot, which drains to the LAW buffer vessels.
	Monitor	Liquid level in the separator vessel controls RFD operation. The RFD operates intermittently. It is controlled by the density and level in the separator vessel (V41011).
Condensing Vapor and Venting Non-condensable Gases	Process	Vapor from the separator vessel is condensed in the primary condenser (E41012) and by the inter-condenser (E41014) and after-condenser (E41013). Condensate is routed to the condensate pot (V41013). Non-condensable gases are routed through the demister (V41015) and vented to the Vessel Vent System (LP-540)
	Monitor	Level in V41013. Differential temperature of cooling water across condensers.
Transferring Liquor	Process	Condensate that is within LERF/ETF specifications is transferred to the Process Condensate Collection System (System LP-510). Condensate not within LERF/ETF specifications is recycled to the treated LAW collection vessel C (V43110C).
	Monitor	Radioactivity (R410026) in primary condenser condensate cooling water return lines will be sampled on a suspected breakthrough. Level (L410051) in V41013.
Transferring Liquor	Process	Remobilize and transfer the contents of the LAW feed evaporator lutepot (V41053) to the buffer vessels, System LP-140 (in case of blockage of the lutepot).

1 **Table 2. Trip Actions Taken as a Response to Specific Plant Conditions**

Condition	Control System Response
Blockage of LAW melter feed evaporator lutepot (V41053)	Stop all feeds to V41014. Initiate lutepot swirlwash and ejector to clear any solid deposits in the lutepot.
High level in separator vessel (V41011)	Stop all feeds to V41014.
Low level in separator vessel (V41011)	Stop evaporator product offtake RFD (P41012A/B and P41048A/B).
Blockage of demisters in V41011	Alarm to CCR.
Breakthrough detected in the condensate pot	Close clean condensate transfer valves and recycle contaminated process condensate to V43110C.
Low level in the process condensate vessel (V41013)	Close clean and contaminated condensate transfer valves (LV11001/2).

2

LP System 140: LAW Melter Feed Lag Storage

1. Introduction

The primary purpose of the low-activity waste (LAW) Melter Feed Lag Storage System (System LP-140) is to provide for buffer storage capacity between the LAW Pretreatment Plant and the LAW Vitrification Facility.

2. Scope

The two LAW Buffer Vessels will store LAW Melter Feed prior to LAW Vitrification.

The LAW Buffer Vessels accept feed from Systems LP-130, PT-230 and LP-330. This feed consists of:

- LAW Melter Feed from System LP-130 (LAW Melter Feed Evaporation System)
- Entrained solids from System PT-230 (LAW Ultrafiltration)
- Treated LAW from System LP-330 (Technetium Removal Using Ion Exchange)
- Treated LAW from System PT-110 (LAW Feed Receipt System)

Furthermore, overflows from the following areas are routed to the two LAW Buffer Vessels:

- LAW Melter Evaporator Concentrate Breakpot (V41054A/B)

This document describes the processes that will be used to receive, store and transfer the LAW Melter Feed from the LAW Melter Feed Evaporation System to LAW Vitrification and to the LAW Feed Receipt System (System PT-110).

This process description should be read in conjunction with the following Process Flow Diagram:

PFD: DWG-W375LP-PR00009, *LAW Melter Feed Lag Storage System* LP-140.

3. Functions

The primary functions of System LP-140 are to receive, lag store and transfer LAW Melter Feed.

The following functions, as outlined in Table 1, assist in accomplishing the primary functions:

- Receive LAW Melter Feed
- Lag store LAW Melter Feed
- Monitor/control system
- Transfer of LAW Melter Feed to LAW Vitrification
- Maintain equipment
- Agitate LAW Melter Feed if required
- Containment of concentrated LAW Melter Feed
- Monitor low pressure steam condensate coils for breakthrough

4. Requirements

4.1. Containment of Concentrated LAW Melter Feed

The design of this system minimizes the risk of a breach in primary containment. The following principles are adopted:

- Vessels are equipped with high level alarms and trip functions to minimize the chances of overflowing.
- Overflow routes are designed to handle the largest flowrate into the vessel. Overflow streams are routed to the appropriate vessels.
- In the event of a vessel breach, concentrated LAW Melter Feed will remain within the secondary containment area where it will be collected in the sump. Routing of sump contents back into the process will be performed if necessary.

4.1.1. Leak Detection

The cell is lined with stainless steel. Level instruments in the cell sump will indicate leakage into the cell. Cell wash down is collected within the sump and a steam ejector is used to transfer the sump contents to plant drain systems.

4.1.2. Level Control

Levels are used within the two vessels to start/stop pump and RFD transfers between vessels. A scaled alarm and trip system is used to prevent spillage. This system consists of:

- High level alarm and trip approximately 8% over normal batch volume
- High-high alarm and trip set below the overflow.

Table 2 summarizes the level situation along with its action.

The distance between the trip heights will depend on the:

- Response time of the instrument
- Response time of the transfer device
- Volume of fluid in the pipe feeding the vessel

4.1.3. Breakthrough Monitoring

Breakthrough monitoring is used for systems using plant services such as low pressure steam. The steam condensate lines are monitored to detect a breach in containment. A monitor will notify the operator if a breach is detected.

4.2. Interlocks within the LAW Melter Feed Lag Storage System (LP-140)

Instrumentation as shown on DWG-W375LP-PR00009, System LP-140 are summarized in Table 3.

5. Description

LAW Melter Feed can be transferred from the LAW Melter Evaporator Concentrate Breakpot (V41054), Entrained Solids Hold Vessels (V12016A/B), Treated LAW Collection Vessels (V43110A/B/C) and LAW Feed Receipt Vessels (V11020A-F) to the LAW Buffer Vessels (V41001A/B). The vessels will normally be operated on an online/offline basis with one vessel feeding LAW Vitrification while the other is receiving LAW Melter Feed. The temperature of the LAW Buffer Vessels will be monitored and controlled to avoid crystallization; a steam heating coil is provided for this purpose. Two heating coils will be installed in V41001A and two installed in V41001B, one operational, the other on standby. Therefore, LAW Melter Feed that is transferred to V41001A or V41001B will be maintained at a temperature to avoid crystallization.

Both vessels are located incell in a C5/R5 area and their overheads are sent to the vessel vent system via pipelines.

The ability exists to route the contents of V41001A/B to the LAW Melter Feed Evaporation System (LP-130) if further evaporation is required. This is accomplished using the LAW melter feed transfer pumps (P41013 A/B). The system includes the LAW Melter Feed Transfer Pumps (P41013A/B). These are controlled by both the level in the LAW Buffer Vessels (V41001A/B), the levels in the LAW Concentrate Hold Vessels in System LV-110 (V21001/2/3) and the levels in the LAW Feed Receipt Vessels (V11020A-F). The LAW Melter Feed will be transferred to the LAW Vitrification Facility and the LAW Feed Receipt System via pipelines within underground trenches. A duty and standby pipeline will be installed to minimize disruptions to facility throughput in the event of a leak. The pipelines will be coaxial to detect and contain any leaks. Following a LAW Melter Feed transfer, the pipe will be flushed with two pipe volumes of water to clear the lines of LAW Melter Feed and minimize the chances of the line blocking. The transfer pipe and annulus will drain to the LAW Pretreatment Plant Wash Vessel (V45009) in the case of transfers to the LAW Vitrification Facility and to the Pretreatment Plant Wash Vessel (V15009) in the case of transfers to the LAW Feed Receipt System.

6. Operations

The LAW Melter Feed Lag Storage System provides buffer capacity between the LPP and the LAW Vitrification Plant. Should either plant be shutdown, this system reduces disruptions to production in the other plant. While one vessel is filling with LAW Melter Feed, the other is feeding LAW Vitrification or transferring LAW Melter Feed to the LAW Feed Receipt System. The two LAW Buffer Vessels are sized to provide sufficient capacity to lag store approximately 14 days of LAW Melter Feed at peak throughput.

A general outline of normal operations and its associated equipment is provided in Table 4 and illustrated in Figure 1.

6.1. Process Operation and Control

Pulsejet mixers will agitate the contents of the two LAW Buffer Vessels if required. Agitation of tank contents ensures that solids in the LAW Melter Feed are suspended prior to transfer, improves heat transfer into the solution from the heating coils and prevents the settling of solids.

Control loops shown for System LP-140 are defined below:

- Temperature instruments (T410082/T410122) on V41001A/B will be used for on/off control of low pressure steam into the coils in V41001A/B.

- Liquid level instruments (L410081/L410121) will be used to control the liquid level in V41001A/B via interlocks on transfer pumps within Systems LP-130, PT-230, PT-110 and LP-330.

- R41008B will detect contamination in the condensate return line from the heating coils.

Table 1. Operating Functions for System LP-140

Function	Shorthand Name	Definition
Receive LAW Melter Feed	Receive	The system will be sized to receive LAW Melter Feed.
Lag Store LAW Melter Feed	Store	The system will be sized to provide lag storage for production from the LAW Melter Feed Evaporation System at peak throughput. Each LAW Buffer Vessel will be sized to contain approximately 7 days supply of LAW Melter Feed at peak throughput.
Agitate vessel contents	Agitate	Suspend solids for transfer and to facilitate heat transfer.
Monitor/Control system	Monitor	Instrumentation will be used to monitor the system's operation and maintain safe conditions.
Contain LAW Melter Feed	Contain	Process equipment will be monitored for failure/leakage.
Maintain Equipment	Maintain	This maintenance includes wash rings in vessels for cleaning and decontamination/decommissioning purposes.
Transfer LAW Melter Feed	Transfer	Sufficient pump head for the LAW Melter Feed Transfer Pumps (P41013A/B) will be provided in order to feed LAW Vitrification Feed Preparation Vessels (V21001, V21002 and V21003) and the LAW Feed Receipt Vessels (V11020A-F).

Table 2. Level Control and Resulting Action

Level Control	Action
Normal operation control high level	Stop transfer sequence. DCS controlled (i.e. no alarms or trips).
Failure of the DCS to stop transfer sequence	DCS software trip and alarm on all DCS controlled sources of in-feed into the vessel.
Failure of DCS software	If required, the hardwired trip would act on both DCS controlled sources and on separate isolation valves.

Table 3. Instrument Description for System LP-140

Instrument No.	Description	Control Action	Trip Action
L410081 L410121	Level on V41001A Level on V41001B	During normal operation, V41001A/B level will control the following: P41012A/B (RFD to V41054A), W41112 (Ejector to V41054) P41048A/B (RFD to V41054B), P12004A/B (Entrained Solids Transfer Pump), P13051/2/3 (RFDs from V43110A/B/C) and P11044A/B (Rejected LAW Transfer Pumps). L410081/L410121 will stop fluidic mixers during low levels.	High level trip will stop all feed streams to V41001A/B. Low level trip will stop P41013A/B. Low level will trip and stop the pulsejet mixers.
T410082 T410122	Temperature on V41001A Temperature on V41001B	Maintain a constant temperature during normal operations by on/off control of low pressure steam to heating coils based on temperature.	None
U41047A U41046A	On/off of P41013A On/off of P41013B	On/off control of pumps during transfers of LAW Melter Feed	None
R41008B	Radiation monitor	Monitors for contamination in the condensate return line.	TBD
U41xxx	Valve Status	Monitors for valve positioning.	TBD

Table 4. Normal Operation and Associated Equipment for the LAW Melter Feed Lag Storage System

Description	Action	Associated Equipment
Receive	LAW Melter Feed received in V41001A and V41001B.	V41001A V41001B
Contain	LAW Melter Feed contained in LAW Buffer Vessels.	V41001A V41001B
Monitor	Level and temperature will be monitored. Steam will be supplied to the heating coils should temperatures drop below crystallization level. Level measurements in cell sump will detect leaks. The steam condensate return lines will be monitored for contamination.	L410081 and L410121 T410082/T410122 R41008B
Transfer	LAW Melter Feed is transferred to LAW Vitrification or the LAW Feed Receipt System.	V41001A V41001B P41013A/B

Figure 1. Normal Operating Diagram for LAW Melter Lag Storage System

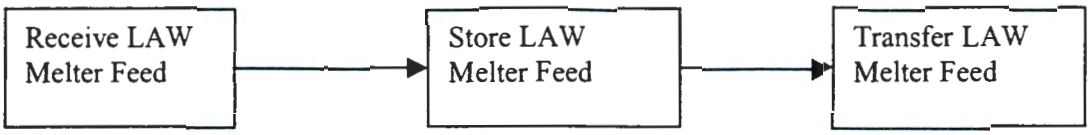

LP System 330: Technetium Removal Using Ion Exchange

1. Introduction and Scope

To meet the radionuclide concentration limits for the immobilized low-activity waste (ILAW) product, it is necessary to remove technetium from the waste stream.

For this System Description refer to drawing number DWG-W375LP-PR00006, *Process Flow Diagram, Technetium Removal Using Ion Exchange, System, LP-330.*

2. System Description

The ion exchange system selected for the removal of technetium from LAW utilizes four ion exchange columns, operating as two parallel sets of two columns. Each set of columns is arranged as a series of two columns, one as the lead and the other following it as the lag column. The order of the columns in each set may be switched, so that the lead column becomes the lag and the lag becomes the lead. At any given time, only one set of columns is in the loading cycle, removing technetium from the LAW feed; the other set is being eluted or having its spent resin replaced. After a lead column is eluted, it becomes the lag column in the next loading cycle. Figure 1 shows the simplified flow scheme for the ion exchange system.

The Tc ion exchange system is in-cell and includes the following operations: removal of technetium ions from LAW by ion exchange, elution and pH adjustment of ion exchange resin beds by chemical additions and rinse steps, and replacement of spent resin with fresh resin. The technetium removal step results in loading of resin beds with sodium pertechnetate.

When technetium concentrations in the effluent of the lead column reaches approximately 50% of that of the technetium concentration in the feed entering the lead column, or if any significant amount of technetium is detected in the effluent of the lag (final) column, the loading operation is switched to the second set of columns.

The loaded column is then eluted. Elution is part of a cycle includes the following steps:

- Displacement of residual LAW feed in the column by rinsing with dilute caustic solution to prevent the precipitation of aluminum hydroxide.
- Rinse the IX column with process water to prevent caustic from mixing with eluate that is transferred to the *Tc Eluant Recovery System* during the elution step, which follows.
- Elution of sodium pertechnetate on the loaded resin with warm water from the eluant recovery system.
- pH adjustment of the resin bed by flushing with sodium hydroxide solution to prevent precipitation of aluminum hydroxide during subsequent LAW feed processing.

After a number of loading and regeneration cycles the resin is expected to lose performance and is termed "spent". The number of cycles depends on LAW constituents, operating temperatures, properties of resin, radiation exposure, and LAW throughput rates. The spent resin is slurried with recycled resin flush solution and flushed out of the column. A slurry of fresh resin is then added to the column as a bed replacement.

Loading is accomplished with pumped LAW feed. All batches of reagents and water flushes of the elution steps are also pumped through the beds using the same pumps. Reagents and water flushes are fed to the pump suction via the Tc Reagent Vessel (V43022) which operates like a breakpot. Spent resin is removed with pumped resin flush liquor. Fresh resin is slurried into the columns by gravity feed.

The main process components of the technetium ion exchange system are four identical ion exchange columns for technetium removal (C43006, C43007, C43008, and C43009), the Treated LAW Collection Vessels (V43110A/B/C) for sampling, and the Tc-IX Buffer (Feed) Vessels (V43001A/B).

Other equipment includes a vessel for receiving and transferring caustic rinse (V43056), with transfer reverse flow diverters (RFDs); and the Tc Reagent Vessel (V43022) for caustic solutions and process water addition.

3. Functions

The primary functions of the system are described as follows:

- With an ion exchange process, remove technetium from the LAW permeate received from the cesium ion exchange system.

- Prepare the captured technetium for subsequent concentration, storage, and feed to the HLW melter system.

The operating functions are those that are necessary to accomplish the primary function. These functions are identified and described as follows:

- Receive treated LAW feed from the cesium ion exchange system and deliver it to the technetium ion exchange columns.

- Recover treated LAW and transfer it to the LAW melter evaporator removal system, or as an alternative, provisions are provided to bypass the LAW melter evaporator and deliver the treated LAW directly to the LAW Buffer Vessels (LAW melter feed vessels).

- Recycle out-of-specification treated LAW back through the technetium removal system.

- Add chemicals and water for column rinse, elution, and pH adjustment regeneration processes.

- Use services for reagent make-up, column rinse, and component operation.

- Potentially recover used caustic solution for re-use.

- Remove technetium from loaded column beds (by elution) to the degree necessary to ensure successful loading after the next step.

- Adjust the pH in the resin bed by flushing the bed with sodium hydroxide to ensure that aluminum hydroxide does not precipitate in the next loading step.

- Remove spent resin and replace with fresh resin.

- Decontaminate vessels using internal wash rings.

- Provide distributed control system (DCS) control, trips, and overflows.

- Provide overfill protection with level controls, alarms, trips, and overflow piping.

Safety-related functions support the primary functions are described as follows:

- Detect loss of containment by a vessel – liquid leakage into the cell from a vessel is detected by sump level instrumentation.

- Prevent backflow of radioactive material into inactive feed lines – isolation valves for process lines and loop seals for plant wash lines and vented lines in plant wash cabinets.

- Provide monitoring of column temperature – the temperature of each ion exchange resin bed is monitored.

- Pressure relief for ion exchange columns – a piping header connected to the vented Tc Reagent Vessel, V43022, (which overflows to V43001A) is connected to each column.

Operational activities are shown in Table 1. Table 2 summarizes the relationship between the safety-related or non-safety-related functions of this system and the process equipment designed to perform those functions. Additionally, internal decontamination of vessels may at times be required. Wash systems have the ability to introduce water, caustic and acid (automated to prevent contact between caustic and acid).

Overflow routings for the system vessels are shown in Table 3.

4. Normal Operations

During loading, elution and spent resin removal, the discharge pressure from the Tc Buffer Pump or from the Resin Flush Pump exerts pressure on the IX column, and the column's vent valve is closed. Each column is protected from overpressure with a pressure relief valve.

For initial startup, air is displaced from the IX columns by filling the columns with process water from the Tc Reagent Vessel (V43022) with the vent valve on the IX column in the open position. Then, fresh resin is added to each column.

4.1. Loading Cycle

Because the LAW feeding the Tc IX columns has been processed by the LAW Ultrafiltration System and the Cs IX System, the LAW is essentially free of Cs and suspended solids. The treated LAW Collection Pumps (P13005A/B) provide the pressure head necessary to pump the LAW from the pretreatment plant to either of two Tc-IX Buffer Vessels (V43001A/B). LAW feed to the technetium ion exchange system is pumped from the Tc-IX Buffer Vessels (V43001A/B) and flows down through the IX column. The actual sodium concentration is controlled during upstream processing such that the LAW specific gravity does not exceed the specific gravity of the wetted resin in order to prevent the resin from reaching a state of neutral buoyancy. The temperature of the LAW fed to the ion exchange columns is controlled and maintained to ensure the operational efficiency of the ion exchange system.

One pair of ion exchange columns is in the loading cycle while the lead column of the other pair is in the elution mode. The set of ion exchange columns in the loading cycle (for example, C43006 and C43007) receives a LAW feed that has had entrained solids removed and has been pretreated. Either column can act as the lead column in the set of two, as they are identical and completely interchangeable.

In the loading cycle, the LAW pumped from the Tc buffers is fed down through the lead column of the set. The LAW then passes down through the lag column before being transported to the Treated LAW Collection Vessels (V43110A/B/C). If the degree of technetium removal is insufficient, such that ILAW limitations cannot be met, or if the meeting of such limits could be in any way compromised by the batch of treated LAW in question, the batch can be recycled back to the Tc-IX Buffer Vessels via the recycle ejectors in V43110A/B/C (W43119A/B, W43120A/B and W43121A/B). These ejectors discharge into Recycle Breakpot, V43003, which empties into the Tc-IX Buffer Vessels. Otherwise, an RFD in V43110A/B/C forwards the treated LAW to V11014 in the Melter Feed Evaporation system, or the LAW Melter Feed Evaporation system can be bypassed by transferring to LAW Buffer Vessels V41001A/B.

The concentration of technetium in the treated LAW is monitored between the lead and lag columns and on the inlet line to the Treated LAW Collection Vessel (V43110A/B/C). If approximately 50% breakthrough from the lead column is detected or if significant technetium breakthrough is detected in the final effluent from the columns, the cycle in the set of columns being loaded is suspended. The LAW feed is then transferred to the second pair of ion exchange columns.

4.2. Fluid Displacement and Pre-Elution Rinse

The following sections describe fluid displacement and pre-elution rinse as they apply to this system.

4.2.1. Fluid Displacement

Residual feed, remaining in the lead column after loading is suspended, is displaced down through the column with caustic solution. Caustic solution displaces LAW feed, which drains by gravity down through the lead column to the lag column, which in turn displaces now treated LAW solution to the Treated LAW Collection Vessels (V43110 A, B, or C). Caustic does not affect the technetium loading on the resin and prevents aluminum hydroxide precipitation. (Any fluids discharged to the lag column are incorporated into treated LAW.)

4.2.2. Pre-Elution Rinse

Residual caustic is displaced from the column by process water pumped from the Tc reagent vessel down through the column from pump (V43001A/B) and controlled using the integrating flow meter. Caustic is displaced from the column in order to minimize caustic being transferred to the *Eluant Recovery System*. Process water is supplied to the Tc Reagent Vessel (V43022) and is pumped through the ion exchange column. The caustic solution displaced from the column and some process water can be discharged to the Caustic Rinse Collection Vessel (V43056) for transfer to vessel V45013 in the *LAW Pretreatment Plant Effluent Collection System*. A piping by-pass around vessel V43056 allows flow from an ion exchange column directly to V45013. Use of the by-pass is preferred at all times if there is space in V45013 to receive fluid from V43056.

4.3. Column Elution

Technetium is eluted (removed) from the ion exchange column by the upflow of warm process water. Technetium eluant vessels V13070A/B supply eluant to the suction of pump P43001A or B. The concentration of technetium in the eluate is monitored in a common line from all four columns. Elution is

continued until only limited concentrations of technetium are detected in the eluate leaving the column. The process water eluate is sent to the technetium eluate receipt vessels (V13067A/B) for further processing to recover the concentrated technetium product. Also, the water is recovered in the Technetium Eluant Recovery system for reuse as eluant.

Excess eluant in the batches is displaced to the effluent collection system via an IX column, which provides the pathway to the manifold for V43056. After excess eluant flows through an IX column, the column is rinsed with process water and pH is adjusted.

4.4. pH Adjustment

The ion exchange bed is subjected to **down** flow of caustic solution. The solution is supplied from outcell to the Tc Reagent Vessel, and the caustic is pumped down through the column, from where it flows either to the lag column or, if the caustic strength is high enough, to the Caustic Rinse Collection Vessel (V43056) for reuse in the column fluid displacement cycle. The column is now ready for reloading.

The newly eluted ion exchange column is used as the lag column in the next loading cycle, and the column that was previously the lag column (and has not been eluted) is used as the lead.

5. Safety and Interlock Requirements

The following list provides a preliminary overview of the interlock features necessary to maintain operability:

- Overfilling – all vessels are protected against overfilling by liquid level indication, and high level instrumentation interlocks to shut off all feed sources, as required. Overflow piping from each vented vessel prevents liquid from entering the vent system (see Table 3).

- Overpressurization – pressure relief for each ion exchange column is provided by a relief valve that discharges to a piping header that is vented in the Tc Reagent Vessel which overflows to the Tc Reagent Vessel V43022.

- Loss of containment – all vessels are protected against containment loss by liquid level indication, low-level interlocks to shut off all feed sources, and DCS control and alarm functions, as required. The cell, which drains to a sump, contains any liquid leakage in this system. The cell is lined with stainless steel, and sump level instrumentation detects any liquid leakage into the cell.

- Inadvertent transfers of fluids – all system sequential operations are properly interlocked to prevent inadvertent transfers at the wrong time or location.

- RFD failure – where needed, system vessels using RFDs incorporate dual RFD system redundancy into the design to prevent loss of process function and to maintain appropriate liquid levels in vessels if one of the RFDs should fail.

- Column Venting – the valves for each IX column are interlocked with the column vent valve so that the vent valve closes when feed valves open to the IX column. Similarly, the vent valve is closed during spent resin removal. The vent valve opens when a column is idle.

Table 1. Operational Activities

Operational Activity	Definition
Contain	Process equipment is monitored for failure or leakage
Load	Load the resin by passing LAW [a] solution through ion exchange columns
Monitor	Instrumentation, online analysis, monitor and control the operations
Elute/ pH adjust	Elute a lead column with a cycle of LAW displacement, water rinse, elution, and caustic rinse steps
Remove/replace	After a number of elutions, resin becomes spent and is removed by slurrying out and replaced by fresh resin that is slurried into a column

[a] LAW = low-activity waste

Table 2. Safety and Non-Safety Related Functions of the *Technetium Removal Using Ion Exchange* System

Function	Activity	Description of Function	Equipment
Remove Tc from LAW feed	Load	Remove technetium from LAW feed	Technetium Ion Exchange Columns C43006/7/8/9
	Contain	Leakage into cell is detected by level instrumentation in the cell sump with DCS control and alarms as required.	
	Monitor	Online monitoring detects technetium breakthrough conditions (development of system ongoing)	
	Monitor	High column pressure and high or low resin bed pressure drop are alarmed	
Recover treated LAW from Tc IX columns and transfer to LAW Feed Evaporator, or LAW Buffer Vessels, or recycle out-of-specification treated LAW to the Tc-IX Buffer Vessels (V43001A/B) as determined by sample system	Monitor	Vessel is protected from overfilling by liquid level instrumentation, with DCS control and alarms as required	Treated LAW Collection Vessels V43110A/B/C
	Contain	Leakage into cell is detected by level instrumentation in the cell sump with DCS control and alarms as required	
Accept treated LAW from Cs IX columns and recycle off-specification LAW (Tc in excess of allowable limits) back through Tc-IX columns	Monitor	Vessel is protected from overfilling by liquid level instrumentation, with DCS control and alarms as required	Tc-IX Buffer Vessels V43001A/B
	Contain	Leakage into cell is detected by level instrumentation in the cell sump with DCS control and alarms as required	
Add chemicals for column fluid displacement, elution, and pH adjustment processes	Elute/ pH adjust	Displace LAW, water rinse, elute, pH adjustment	Tc Reagent Vessel (V43022), Technetium Ion Exchange Columns, C43006/7/8/9), Caustic Rinse Collection Vessel (V43056), Tc Buffer Pumps (P43001A/B)
	Contain	Leakage into the cell is detected by liquid level instrumentation in the cell sump, with DCS control and alarms as required	
	Monitor	Technetium concentration in the eluate is monitored to determine when elution is complete	
Recover pH adjustment caustic for reuse (optional task)	Elute	Caustic and rinse water discharged from a column may be recovered for re-use.	Caustic Vessel, V43056
	Monitor	Vessels are protected from overfilling by liquid level instrumentation, with DCS control and alarms as required	
	Contain	Leakage into the cell is detected by liquid level instrumentation in the cell sump, with DCS control and alarms as required	

Table 2. Safety and Non-Safety Related Functions of the *Technetium Removal Using Ion Exchange* System

Function	Activity	Description of Function	Equipment
Spent resin removal and fresh resin addition	Remove/ replace	Remove spent resin from a column as a slurry, and add fresh resin as a slurry (operational measures ensure replacement of resins before excessive degradation occurs)	Technetium Ion Exchange Columns, (C43006-9), Fresh Resin Vessel (V43127), Spent Resin Vessels (V43135/6) and Resin Flush Transfer Pumps P43064A/B
	Contain	Leakage into the cell is detected by liquid level instrumentation in the cell sump, with DCS control and alarms as required	

[a] LAW = low-activity waste
[b] DCS = distributed control system
[c] RFD = reverse flow diverter

Table 3. Overflow Routes for Technetium IX Vessel System

Overflowing Vessel	Receiving Vessel
Caustic Rinse Collection Vessel, V43056	Overflows to V43XXX
Tc-IX Buffer Vessel, V43001A	Overflows to Tc-IX Buffer Vessel, V43001B
Tc-IX Buffer Vessel, V43001B	Overflow to V45009
Recycle Breakpot V43003	Overflows to Tc-IX Buffer Vessel, V43001A
Tc Reagent Vessel (V43022)	Overflows to Tc-IX Buffer Vessel, V43001A
Treated LAW Collection Vessel, V43110C	Overflows to Treated LAW Collection Vessel, V43110B
Treated LAW Collection Vessel, V43110B	Overflows to Treated LAW Collection Vessel, V43110A
Treated LAW Collection Vessel, V43110A	Overflows to Tc-IX Buffer Vessel, V43001A
Condensate Pot, V41013 (LP-PR00008)	Overflows to Treated LAW Collection Vessel, V43110C
Pulse Pot, V41014 (LP-PR00008)	Overflows to Treated LAW Collection Vessel, V43110C

Figure 1. Simplified Flow Schematic for Tc Ion Exchange System

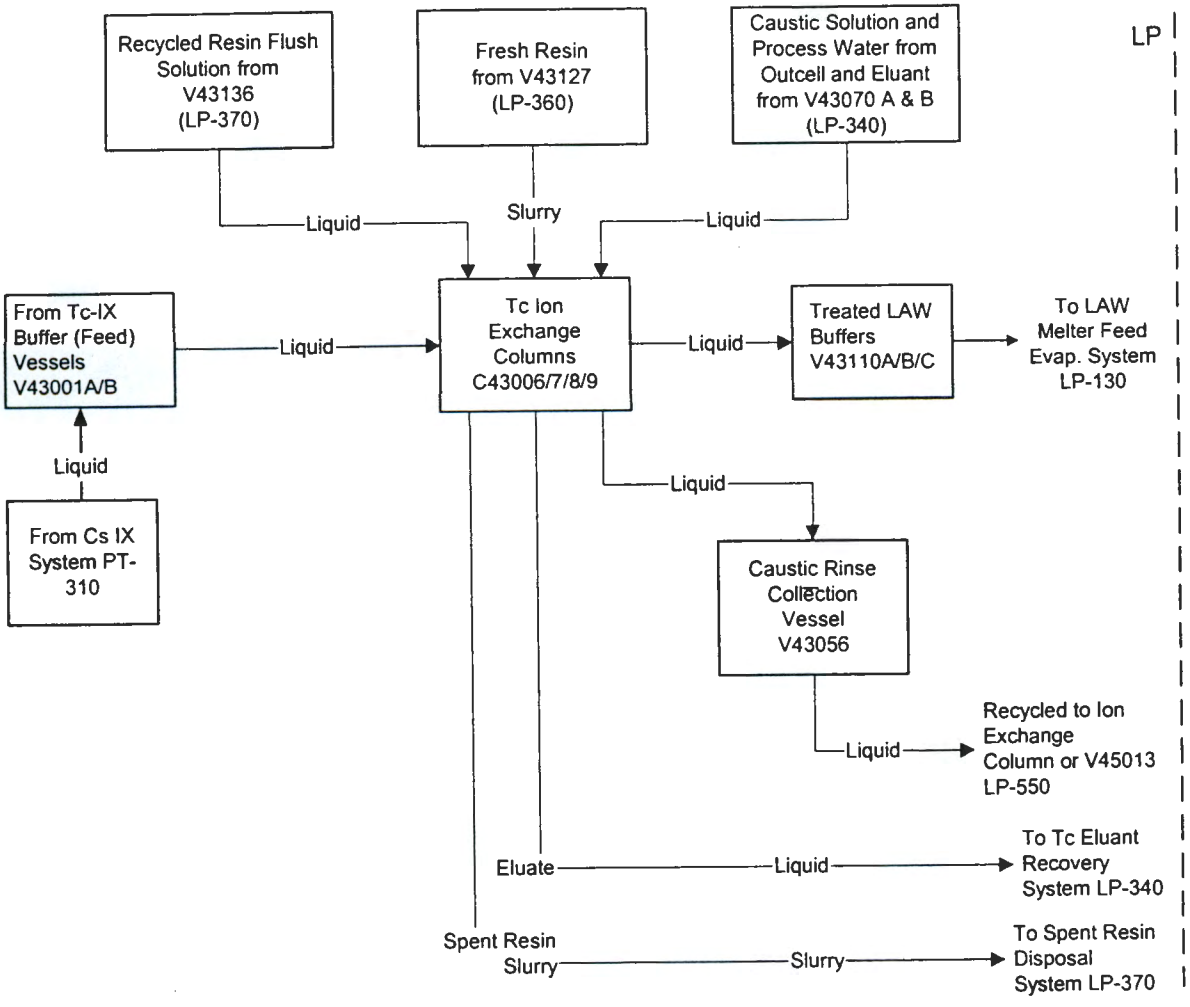

LP System 340: Technetium Eluant Recovery

1. Introduction and Scope

The purpose of this system is to reduce the volume of the technetium eluate stream from the ion exchange process, thereby producing a technetium concentrate, and to recover as much as possible of the water from this stream for reuse.

Refer to drawing number DWG-W375LP-PR00010, *Process Flow Diagram, Technetium Eluant Recovery* for System LP-340.

2. System Description

The elution stream exiting from an ion exchange column is termed "eluate" and the stream feeding an ion exchange column for elution is termed "eluant."

Eluate, containing technetium from the ion exchange columns, is collected and fed to a steam-jacketed evaporator kettle via a pulse pot. Before the eluate is fed, the kettle is "charged" with water. The "charge" is then heated to a predetermined temperature and the required process vacuum conditions are established before feeding of eluate. The vacuum is set at a point which the eluant is recovered near its optimum temperature for eluting the resin. The inlet stream of eluate quickly evaporates leaving the salts that are in the eluate to accumulate in the kettle. The resulting concentrated technetium liquor is transferred from the evaporator to the Cesium and Technetium Concentrate Storage Vessel V13073, in system PT-320, where it is stored prior to feeding to the HLW melter system.

Water vapors pass through a mist eliminator permanently mounted near the top of the kettle to a refluxed rectifier column where the water is condensed and thereby recovered for reuse as eluant. Water vapor from the top of the rectifier column is condensed, while still under vacuum, in the primary shell-and-tube heat exchanger with cooling water. A second heat exchanger, the aftercondenser, condenses the steam from the vacuum ejector. This condensate is transferred to the effluent collection system. Non-condensable vapors and gases from the aftercondenser are vented. (See Figure 1.)

3. Functions

The primary functions of the *Technetium Eluant Recovery* system are described as follows:

- Recover water from the technetium eluate for reuse as eluant, minimizing process water addition and effluents.

- Concentrate eluted technetium and store eluted technetium with cesium for eventual incorporation in the HLW melter feed.

The secondary functions of the *Technetium Eluant Recovery* system are those that are required to support the primary function. These functions are identified and described as follows:

- Receive technetium eluate from the technetium ion exchange system and deliver it to the evaporator kettle at a controlled rate.

- Recover water vapor from the kettle evaporator overhead and transfer it to the rectifier column.

- Recover technetium concentrate from the evaporator bottoms and transfer it to the cesium and technetium concentrate storage vessel V13073 via W43011, lute pot V43072 and breakpot V13074.

- Recover water vapor from the rectifier column, via a two-stage vacuum ejector/condenser system, and collect the condensate product in a pot for eventual transfer to V45013 and V45018 Alkaline Effluent Vessels.

- Recover water from the rectifier column underflow and transfer it to the technetium eluant vessels for reuse. These vessels have cooling coils in order to provide the optimum temperature for the eluant.

- Transfer water eluant to the ion exchange (IX) columns.

- Add process water for evaporator start-up and for technetium eluant vessels make-up.

- Decontaminate vessels with internal wash rings.

- Provide DCS (distributed control system) control and alarms as required.

- Provide overfill protection with liquid level instrumentation, alarms, trips, and overflow routes. (See Table 3 for descriptions of these protective implementations.)

- Detect loss of containment by a vessel – liquid leakage into the cell from a vessel is detected by sump liquid level instrumentation.

- Prevent backflow of radioactive material in inactive feed lines – isolation valves or loop seals are included. Valves in plant wash cabinets vent on closing.

- Check cooling water flow – cooling water return lines are monitored for flow.

- Monitor for potential leakage of process fluid into cooling water and condensate – cooling water return lines and jacket steam condensate are monitored for contamination.

- Overpressure protection – V43010, V43069, C43010, E43005 and V43072 are prevented from over-pressurization by being connected (with no valves) to vented vessels. All other vessels and E43006 are vented directly.

Operational activities are shown in Table 1. Table 2 summarizes the relationship between the safety-related and non-safety-related functions of this system to the process equipment designed to perform these tasks. Additionally, at times, internal decontamination of vessels may be required. The vessels are fitted with wash rings for decontamination by flushing. Wash systems have the ability to introduce water, caustic, and acid (automated with valve positions sequenced so that caustic is not added directly to equipment that contains acid). Also, the stainless steel-lined cell is fitted with a liner wash system for walls/floor decontamination purposes. In-cell process equipment is designed to operate without maintenance for the life of the plant. Overflow routes provide containment during any overfill event. Table 3 gives the overflow routings for the system vessels.

4. Normal Operations

4.1. Technetium Eluate Receipt Vessels

Technetium eluate is delivered from the ion exchange process in periodic batches. It is received in one of two technetium eluate receipt vessels (V43067A/B). Each batch is analyzed to determine the salts concentration and technetium content prior to automated feeding to the evaporator kettle (V43069) via reverse flow diverters (RFDs) P43032A/B and P43033A/B, pulse pot V43068 and lute pot V43010.

4.2. Pulse Pot and Evaporator Kettle

The eluant recovery evaporator (V43069) is a jacketed kettle, with a built-in mist eliminator to remove aerosols formed during evaporation. Technetium eluate is supplied from the pulse pot V43068 and enters the evaporator kettle via a lute. Operating under vacuum serves to reduce the boiling temperature of the liquor. Heat input to the evaporator kettle is provided by steam supplied to the vessel jacket.

The technetium concentrate, with any solids, is extracted from the evaporator kettle by transfer ejector W43097A/B via lute pot V43072 and sent through an outlet line to breakpot V13074 (PT-320), which drains to vessel V13073. This vessel stores technetium and cesium concentrates. If it is desired to increase the pH in V13073 (PT-320), sodium hydroxide (caustic) solution can be added to evaporator kettle V43069 prior to transferring its contents.

There is no emptying ejector in V43069, because it operates under vacuum. Emptying for decontamination purposes will be done via V43072.

4.3. Lute Pot V43072

The lute that conveys the evaporator liquor to ejector W43097A/B maintains a vacuum in the nitric acid recovery system. Upon startup the lute pot must be charged with enough liquid to fill the ejector line from the kettle to a barometric head, to allow a vacuum to be formed in the system. The volume of liquid in the lute may be filled by filling with wash line in the lute pot or by charging the evaporator first and then using the transfer ejector to siphon the needed volume from the kettle into the lute and lute pot.

After the kettle contents have been ejected through the lute pot, the lute pot must be completely rinsed and emptied of concentrate to ensure crystallization of salts does not occur. Emptying of V43072 or V43069 for decontamination will be done with the V43072 emptying ejector, which discharges to eluate receipt vessel V43067A. (The emptying ejector at V43067A discharges to the plant wash vessel.)

4.4. Rectifier Column

The vapor leaving the evaporator kettle is water. The salts (including technetium) dissolved in the feed accumulate in the evaporator kettle bottoms. The column operates with a relatively high reflux flow from the technetium nitric acid condenser. The majority of the incoming vapor is recovered as water and flows from the bottom of the rectifier to the recovered eluant vessel, V43028. The column has sieve trays, with the vapor inlet below the lower tray.

The column, being refluxed with condensate from the overhead condenser, serves to remove trace amounts of entrained technetium and other elements that may pass through the mist eliminator. The column also has the capability to enrich recovered acid, if the resin is changed to one that is eluted with acid.

4.5. Technetium Nitric Acid Condenser

The technetium nitric acid condenser (E43005) is a water-cooled, tube unit with condensation of water vapor taking place on the shell side. The condenser shell incorporates a condensate sump, which contains a weir arrangement to control the flow split between the reflux and the overhead product flows.

4.6. Aftercondenser

To reduce the boiling temperature of the liquids in the evaporator kettle, the system is run under vacuum. This is achieved using a two-stage steam ejector system. Exhaust vapors from the ejectors are condensed in an aftercondenser (E43006) prior to venting the exhausted gases to the ventilation system scrubbing equipment. Process condensate, from the technetium nitric acid condenser and aftercondenser, drains to the process condensate pot vessel (V43075).

4.7. Process Condensate Pot

The process condensate pot collects condensate from the technetium nitric acid condenser and the aftercondenser and transfers it to alkaline effluent vessel V45013 or V45018.

4.8. Recovered Acid Vessel and Technetium Eluant Vessels

Recovered water (eluant) flows by gravity from the bottom of rectifying column C43010 to the recovered acid vessel (V43071). From this vessel, if the water needs reprocessing, as evidenced by Tc concentration above allowable levels, it is recycled through the evaporator via eluate receipt vessel V43067A; otherwise, the water is transferred to one of two technetium eluant vessels V43070A/B. Cooling water pumped through in-vessel coils cools the eluant vessels contents.

During evaporator start-ups the recovered acid vessel must be charged with enough liquid to fill the downcomer from C43010 to a barometric head, which will allow for vacuum operations in the system.

When an ion exchange column requires elution, water from one of the technetium eluant vessels is transferred by P43001A or B, in system LP-330, through the column. Excess eluant in the eluant vessels may be purged via an ion exchange column through V43056 to alkaline effluent vessel V45013 (LP-550).

4.9. Effluents

The effluent streams from the eluant recovery process and their disposal routes are as follows:

Stream Description	Disposal Route
Steam condensate from evaporator jacket	Non-active condensate vessel in System 977*
"Water" from rectifier overheads	Alkaline effluent vessel in system LP-550

* If condensate from jacket is radioactive, it is routed to the pretreatment plant wash vessel.

The following utility streams are monitored outcell for potential contamination:

- Cooling water from overhead condenser E43005.
- Cooling water from aftercondenser E43006.
- Cooling water from vessel cooling coils V43070A/B.
- Low-pressure steam condensate from the jacket of evaporator V43069.

Based on sampling of eluant it may be necessary to reject some recovered eluant, and replace it with process water. This will occur, for example, if eluant water becomes contaminated with excessive technetium. To remove contaminated water, the water is transferred to V43056 via an ion exchange column and sent to the Alkaline Effluent Vessel V45013.

5. Safety and Interlock Requirements

A preliminary overview of the interlock features necessary to maintain operability is as follows:

- Overfilling – all vessels are protected against overfilling by liquid level indication, high-liquid-level instrumentation interlocks to shutoff all feed sources and DCS control functions with hard-wired trips as required. Overflow piping from each vented vessel prevents liquid from entering the vent system.

- Loss of containment – vessels containment loss is detected by liquid level indication in the sump, and in the event of extremely low-liquid-level in a process vessel, DCS control and alarms will function as required, including shut-off of all feed sources. The cell, which drains to a sump, will contain any liquid leakage in this system, and a steam ejector is used to empty the sump as needed. The cell is lined with stainless steel.

- Loss of cooling water to condenser – if there is a loss of normal cooling water, and backup cooling water is not available, the vacuum ejectors system and the evaporator will automatically shut down.

- Inadvertent transfers of fluids – all system sequential transfer operations are interlocked.

- Hydrogen generation – purge air will be used continuously to disperse any hydrogen formed by radiolysis in the cesium and technetium storage vessel.

Table 1. Operational Activities for System LP-340

Operational Activity	Definition
Process eluate	Evaporation to concentrate technetium, and recover water for reuse as eluant.
Contain	Process equipment is monitored for leakage.
Monitor	Instrumentation, online analysis, monitor/control the operations.
Condense	Condense water vapor in rectifier overhead.

Table 2. Safety-Related and Non-Safety Related Functions of the Technetium Eluant Recovery System

Function	Activity	Description of Function	Equipment
Receive eluate from ion exchange columns C43006-9.	Process eluate	Eluate is pumped through the Tc-IX columns and is stored for analysis of salts concentration and Tc content.	Eluate Receipt Vessels V43067A/B
	Contain	Leakage into cell is detected by liquid level instrumentation in the cell sump with DCS [a] control and alarms.	
	Monitor	Vessel protected from overfilling by liquid level instrumentation with DCS control and alarms.	
Transfer eluate from receipt vessels to evaporator via pulse pot V43068.	Process eluate	Eluate is pumped from receipt vessels to pulse pot V43068 that gravity feeds the evaporator via lute pot V43010.	Pulse pot V43068 Reverse flow diverters P43032A/B and P43033A/B Lute pot V43010
	Contain	Leakage into cell is detected by liquid level instrumentation in the cell sump with DCS control and alarms.	
	Monitor	Liquid level in the lute and lute pot for adequate level to pull a vacuum in V43069.	
	Monitor	Liquid level for the evaporator is maintained using its liquid level measurement as a controller set point for modulating the RFD feeding the pulse pots which in turn feed the evaporator.	
Recover water vapor from the evaporator overhead in rectifier column. Additionally, recover technetium concentrate from the evaporator bottoms.	Contain	Leakage into cell is detected by liquid level instrumentation in the cell sump with DCS control and alarms.	Evaporator Kettle V43069 Rectifier column C43010
	Monitor	Vessel protected from overfilling by liquid level instrumentation with DCS control and alarms.	
	Monitor	Condensate from evaporator jacket is monitored for contamination.	
	Process eluate	Evaporate eluate. The rectifier column helps remove technetium from the vapors.	
	Monitor	Evaporator/rectifier pressure control is achieved with a control loop that regulates vacuum by bleeding a small airflow into the suction line of the vacuum ejectors via a modulating control valve.	
	Monitor	Evaporator temperature is a function of the amount of vacuum. Steam to the evaporator jacket is flow controlled. The evaporation rate is not directly monitored, but the evaporation duty is proportional to the rate at which steam condenses in the jacket.	

Table 2. Safety-Related and Non-Safety Related Functions of the Technetium Eluant Recovery System

Function	Activity	Description of Function	Equipment
Recover water vapor from the rectifier column via a two-stage condenser system and collect condensate product in a pot for eventual transfer to the Effluent Collection system (V45013 and V45018).	Condense	Water vapor is condensed. Some of the condensate is refluxed back into the rectifier and the remainder flows by gravity to the process condensate pot.	Condensers E43005 & E43006 Process Condensate pot V43075
	Monitor	All cooling water return lines are monitored for flow and contamination.	
	Monitor	Vessel protected from overfilling by liquid level instrumentation with DCS control and alarms.	
	Contain	Leakage into cell is detected by liquid level instrumentation in the cell sump with DCS control and alarms.	
Recover water from the rectifier column underflow and transfer to the technetium eluant vessels for reuse.	Process eluate	Water flows by gravity from the bottom of the rectifier column	Recovered Acid Vessel V43071 Reverse Flow Diverters P43034A/B and P43035A/B and Ejector W43011 Eluate Receipt Vessel V43067A
	Monitor	If excessive radioactivity is detected in V43071, then the recovered water is transferred to vessel V43067A via breakpot V43004 for recycle through the system.	
	Monitor	Vessel protected from overfilling by liquid level instrumentation with DCS control and alarms.	
	Contain	Leakage into cell is detected by liquid level instrumentation in the cell sump with DCS control and alarms.	
Transfer water from the technetium eluant vessels to the technetium ion exchange columns C43006-9.	Process eluate	One eluant vessel is being sampled while the other is supplying water eluant to an IX[b] column	Technetium Eluant Vessels V43070A/B
	Contain	Leakage into cell is detected by liquid level instrumentation in the cell sump with DCS control and alarms.	
	Monitor	Vessel protected from overfilling by liquid level instrumentation with DCS control and alarms as required.	
	Monitor	Temperature control is provided to the technetium eluant vessels by a cooling water supply that operates continuously and the return is monitored for technetium.	

Table 2. Safety-Related and Non-Safety Related Functions of the Technetium Eluant Recovery System

Function	Activity	Description of Function	Equipment
Transfer technetium concentrate to the Cs/Tc Concentrate Storage Vessel via lute pot V43072 and breakpot V13074.	Process Concentrate	Add caustic to the Tc concentrate in the evaporator.	Evaporator V43069 Ejector W43097A/B Lute Pot V43072 Breakpot V13074 (PT-320)
	Contain	Leakage into cell is detected by liquid level instrumentation in the cell sump with DCS control and alarms.	
	Monitor	Liquid level in the lute and lute pot for adequate level to pull a vacuum in V43069.	
	Monitor	Vessel protected from overfilling by liquid level instrumentation with DCS control and alarms as required.	
	Monitor	Temperature in breakpot is monitored to signal when evaporator has been emptied.	

[a] DCS = distributed control system
[b] IX = ion exchange
[c] HLW = high level waste

Table 3. Overflow Routes for Technetium Eluant Recovery System Vessels

Vessel No.	Overflow Route
V43067A Technetium Eluate Receipt Vessel	Overflows to V43067B
V43067B Technetium Eluate Receipt Vessel	Overflows to V43067A and a secondary overflow to V45009 located in the Plant Wash System.
V43004 eluant recycle breakpot.	Overflows to V43067A
V43068 Evaporator Feed Pulse Pot	Overflows to V43067B
V43071 Recovered Acid Vessel	Overflows to V43067A
V43070A Technetium Eluant Vessel	Overflows to V43070B
V43070B Technetium Eluant Vessel	Overflows to V43070A and a secondary overflow to V45009 located in the Plant Wash System.

Figure 1. Basic Flow Diagram for the Technetium Eluant Recovery System (LP-340)

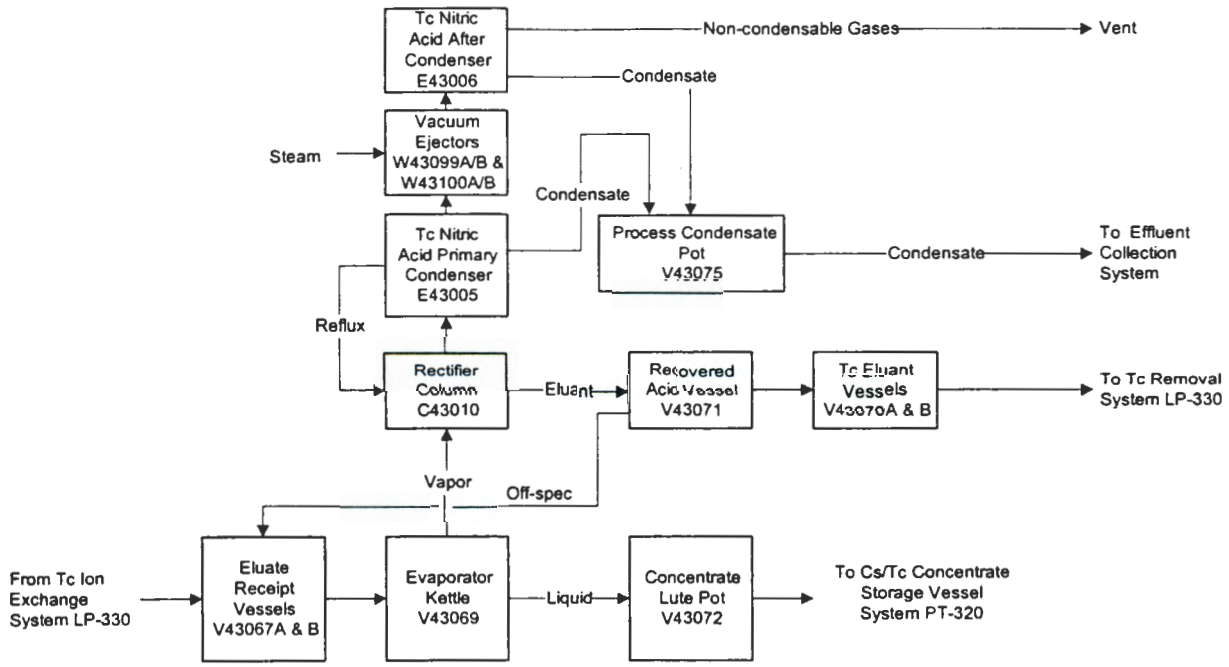

LP System 370: Spent Resin Collection and Dewatering

1. Introduction and Scope

Cesium and technetium are removed from the Hanford Double Shell Tank (DST) system unit waste streams by ion exchange resins. Spent ion exchange resin is generated as a result of the requirement to remove radionuclides (i.e., cesium and technetium) from Hanford tank wastes in order to meet the ILAW specifications for glass incorporation. The design baseline ion exchange resins selected to meet this requirement are regenerable resins that cannot be regenerated indefinitely because extended radiation exposure will reduce their loading capacity. Also, repeated use of acid, water, and caustic washes for the elution, rinsing, and regeneration of the resins eventually causes chemical degradation of the resin material that results in a loss of exchange efficiency. Therefore, the resin must be periodically removed from the ion exchange columns and replaced with fresh resin.

This document defines the functions and describes the processes that will be used to recover spent resin from the ion exchange columns.

Refer to drawing number DWG-W375SR-PR00012, *Process Flow Diagram, Resin Recovery*.

2. System Description

After a number of loading and elution/regeneration cycles, spent resin must be removed from the ion exchange columns and replaced with fresh resin. Spent resin is removed from each ion exchange column independently. The resin recovery system is in-cell and includes the following operations: supply of flush liquor for removal of spent resin as a slurry from ion exchange columns, collection of spent resin and flush liquor, and dewatering of spent resin. The main process components of the resin recovery system are:

- Spent Resin Collection Vessels V43135A/B
- Resin Flush Collection Vessel V43136
- Moisture Separation Vessel V43162
- Resin Flush Transfer Pumps P43064
- Resin Transfer Pumps P43066A/B
- Resin Recycle Transfer Pump P43067
- Resin Dewatering Pump P43072
- Resin Dewatering Container Vacuum Pump P43071
- Dewatering Container Fill Head System R43297
- Dewatering Container Moisture Chiller E43001

Resin is hydraulically discharged from the ion exchange column by fluidizing the bed of resin and then discharging it under pressure. Flush liquor is pumped to the columns from Resin Flush Collection Vessel V43136 by Resin Flush Transfer Pump P43064. Fluidization of the bed is achieved by pumping flush liquor into the ion exchange column above the bottom screen. This flow of liquor entrains the bed material and carries it up and out of the column. Resin, along with the flush liquor, is discharged into either of two sloped bottom Spent Resin Collection Vessels V43135A/B.

Resin and flush liquor are transferred from vessels V43135A/B to the resin dewatering container (provided by System 410). Prior to transfer, eductors are used to initiate mixing of resin and flush liquor in vessels V43135A/B. The resin is transferred to the resin dewatering container. The dewatering pump P43072 is activated to remove the excess water used for transfer and to aid in compaction of the media.

After the completion of the resin transfer, a gross dewatering operation is conducted with the same pump. With the removal of most of the water from the container, the pump is shut off and valved out of the system.

The dewatering vacuum pump P43071 is valved in and turned on. Water is moved by air velocity through the resin and the container filtration system to a moisture separator vessel V43162. This vessel contains a refrigeration coil that reduces the dew point of the air. The air then enters the vacuum pump for injection back into the container. A pressure relief valve provides container overpressure protection.

When the water collection for the resin is reduced to an acceptable level, the resin is dewatered. Liquor from this operation is discharged by gravity from vessel V43162 to vessel V43136. Excess liquor is pumped from V43136 to the LAW feed evaporator system.

Spent resin is routed to one of the following destinations:

- Dewatering and waste container loading equipment (System 410) for transfer to the DST
- The LAW melters for vitrification
- The HLW melter for vitrification

Figure 1 is a block diagram showing the general flow scheme for the spent resin recovery system.

3. Functions

The primary functions of the spent resin recovery system are those that are essential to accomplish the normal or designed process operation. These functions are identified and described as follows:

- Flush and receive spent resin from the cesium and technetium ion exchange columns
- Monitor spent resin slurry for residual activity
- Return spent resin slurry to ion exchange columns for additional elution if required
- Separate recovered resin from flush liquor
- Chemically treat recovered resin as required
- Recover resin flush liquor and fresh resin addition liquor for reuse or processing through LAW feed evaporator
- Transfer spent resin slurry not suitable for off-site disposal to LAW or HLW melter feed systems
- Provide ICS (integrated control system) control and alarms as required

Safety-related functions that support the primary functions include:

- Loss of containment detection - any liquid leakage into the cell is detected by cell sump level instrumentation
- Backflow of radioactive material – isolation valves prevent backflow of radioactive material into inactive feed lines; lines in plant wash bulges are vented to prevent suck-back as a result of vacuum formation.

Another safety-related function is the use of purge air for certain equipment in order to maintain hydrogen concentrations safely below its lower flammable limit. Purge air is used to keep the hydrogen concentration below its lower flammable limit in the Spent Resin Collection Vessels V43135A/B which could, under certain conditions, contain spent resin with appreciable amounts of Cs.

A description of the operational activities is shown in Table 1. Table 2 summarizes the relationship between both the safety-related and non-safety-related functions of this system and the process equipment designed to perform these tasks. Additionally, at times internal decontamination of vessels may be required. The vessels are fitted with wash rings for decontamination by flushing. Wash systems will be able to introduce water, caustic, and acid. Also, the stainless steel-clad cell is fitted with a cladding wash system for decontamination of walls/floor.

Overflow routings for the system are shown in Table 3.

4. Normal Operations

4.1. Process Operation

Spent resin is removed from each ion exchange column independently as a batch operation. Resin is first eluted, and then hydraulically discharged under pressure from the ion exchange column by fluidizing the bed of resin with a flush liquor (i.e., demineralized water). The resin flush liquor is stored in collection vessel V43136 and is delivered to the ion exchange columns by transfer pump P43064.

Spent resin slurry from the ion exchange columns is collected in Spent Resin Collection Vessels V43135A/B. In order to obtain good resin fluidization and subsequent transfer to the resin dewatering container, water above the resin is recirculated through eductors installed inside each vessel at two levels. The function of the upper eductors located in the water above the settled resin bed is to create the jet mixing action and necessary velocity to initiate the mixing of resin and water. The lower eductors induce vortexes over the entire vessel volume to assure uniform suspension of the resin. Process water may be used as necessary to adjust the resin concentration. No additional water is introduced into the vessels until lines are flushed at the end of a resin transfer.

To transfer spent resin from V43135A/B to the dewatering container, Resin Transfer Pump P43066A/B is started and recirculates the clear liquid above the resin through the mixing eductors and into the resin bed at the bottom of V43135A/B. After recirculating, the pump suction line connected to the bottom of V43135A/B is flushed with process water to push any settled resin into V43135A/B, and the line is opened to Pump P43066A/B to begin recirculation of resin slurry. The recirculating resin is monitored for cesium (gamma) by radiation monitor R437250 or technetium (beta) by radiation monitor R437251 to verify that cesium and technetium have been sufficiently removed from the resin prior to disposal. Spent resin that contains cesium in excess of allowable limits is recycled to Cesium Ion Exchange Column C13001 or C13003 by Pump P43067 for an additional elution cycle. Spent resin that contains technetium in excess of allowable limits is recycled to Technetium Ion Exchange Column C43006 or C43008 by Pump P43067 for an additional elution cycle. In either case, the column receiving the off-spec spent resin recycle would have to be eluted and emptied prior to receiving the recycle resin from V43135A/B. Vessels V43135A/B are each designed to have sufficient capacity for two batches of slurried resin.

When recirculation of the resin has been established, the resin slurry is delivered to the sampling system for Vessels V43135A/B by Pump P43066A/B. The spent resin is analyzed to demonstrate compliance with the Hanford Site Solid Waste Acceptance Criteria (HSSWAC) and to permit ultimate transfer to a Hanford TSD. If the resin is not in compliance with the HSSWAC and if LAW glass specifications are

met, the resin is routed to the LAW melters via the LAW feed preparation vessels V41001/2 by Resin Recycle Transfer Pump P43067. If the spent resin does not meet the LAW glass specifications, the resin will be transferred to the HLW melter via the HLW melter feed blending vessel V42007A by Pump P43067.

When it is determined that the spent resin in V43135A/B is in compliance with the HSSWAC, the pump discharge to the dewatering container is opened to fill the container to a predetermined level as the resin is recirculated by Pump P43066A/B. When the transfer operation is completed, the pump suction line from the bottom of V43135A/B is closed, and process water is used to flush resin remaining in the transfer pump and line to the dewatering container. The pump is then shut down and the suction line is flushed back into V43135A/B. The vessel from which the transfer occurred is then ready for the next transfer operation.

As resin is being transferred to the dewatering container the dewatering pump P43072 is activated to remove the excess water used for transfer. After the completion of the resin transfer, a dewatering operation is conducted with the same pump. With the removal of most of the water from the container, the pump is shut off and valved out of the system.

The dewatering vacuum pump P43071 is valved in and turned on. Water is moved by air velocity through the resin and the container filtration system to a moisture separator vessel V43162. This vessel contains a refrigeration coil that reduces the dew point of the air. The air then enters the vacuum pump for injection back into the container. When the water collection for the resin is reduced to an acceptable level, the resin is dewatered.

Resin Flush Collection Vessel V43136 receives flush liquor from the resin dewatering operation, and also receives resin transport liquor from the cesium and technetium ion exchange columns during the addition of fresh resin. The streams are stored for reuse as resin flush liquor. If the combined inputs into vessel V43136 exceed its storage capacity, then the excess liquor is recycled to the LAW feed evaporator system (LP-130). Resin Flush Transfer Pump P43064 can be used to recirculate liquor to V43136 in order to mix the contents of the vessel and allow for sampling prior to transfer of the flush liquor.

5. Safety and Interlock Requirements

The following list provides a preliminary overview of the interlock features necessary to maintain operability:

- Overfilling – Vessels V43135A/B, V43136, V43162, and the dewatering container are protected against overfilling by liquid level indication, high-level instrumentation interlocks to shutoff all feed sources, and ICS control functions backed up by hard-wired trips as required. Overflow piping from each vented vessel prevents liquid from entering the vent system (see Table 3).

- Loss of containment - all vessels are protected against containment loss by liquid level indication, and ICS control and alarm functions as required, including shut-off of all feed sources. The cell, which drains to a sump, will contain any liquid leakage in this system. The cell is lined with stainless steel, and sump liquid level instrumentation will detect any liquid leakage into the cell.

- Inadvertent transfers of fluids - all system sequential operations are properly interlocked to prevent inadvertent transfers at wrong time or location.

- Loss of pumping function - operation of pumps is not permitted or pumps are shut down if there is indication that the pumping system has plugged, lost its integrity, or ceased to function properly, or if pumping/receiving vessel conditions warrant a pump shutdown. These conditions could be indicated by:

  - High or no electrical current indication
  - Abnormal pumping/receiving vessel conditions

Table 1. System 370 Operational Activities

Operational Activity	Definition
Contain	Process equipment is monitored for leakage.
Process	Normal operating processes are carried out.
Monitor	Instrumentation and sampling and analysis monitor the operations.
Unblock	If resin solids cause a blockage in equipment or piping, the plant wash system will be used to flush out the blockage.

Table 2. Resin Recovery System Functions

Function	Activity	Description of Function	Equipment
Recover resin flush liquor and fresh resin addition liquor for reuse.	Process	Receive flush liquor from resin dewatering container and cesium/technetium ion exchange columns.	Resin Dewatering Container and Resin Flush Collection Vessel V43136
	Contain	Leakage into cell from vessel detected by liquid level instrumentation in the cell sump with ICS [a] control and alarms as required.	
	Monitor	Vessel protected from overfilling by liquid level instrumentation with ICS control and alarms as required.	
Transport resin flush liquor to ion exchange columns.	Process	Pump to the ion exchange column that is being emptied of spent resin.	Resin Flush Transfer Pump P43064
	Monitor	Transfer pump protected by liquid level instrumentation on V43136 with ICS control and alarms as required.	
Transport excess resin flush liquor to LAW [b] feed evaporator system	Process	Pump liquor through filter to LAW evaporator feed tanks as needed to maintain water inventory.	Resin Flush Transfer Pump P43064
	Monitor	Transfer pump protected by liquid level instrumentation on V43136 with ICS control and alarms as required.	
Recover spent resin for disposal and sampling of recovered resin to determine disposition.	Process	Receive spent resin slurry from ion exchange columns.	Spent Resin Collection Vessels V43135A/B
	Contain	Leakage into cell from vessels will be detected by liquid level instrumentation in the cell sump backed up by ICS control and alarms as required.	
	Monitor	Vessels protected from overfilling by liquid level instrumentation backed up by ICS control and alarms as required.	
	Unblock	Flush line with process water to remove any internal blockages.	
	Unblock	Mixing eductors provided to prevent settling in sloped bottom tank and to homogenize resin.	
Separate recovered resin from flush liquor.	Process	Spent resin slurried from the spent resin collection vessels is dewatered.	Resin Dewatering Container and Resin Transfer Pumps P43066A/B
	Monitor	Vessel protected from overfilling by liquid level instrumentation backed up by ICS control and alarms as required.	
	Unblock	Flush line with process water to remove any internal blockages in vessel.	
Transport resin from V43135A/B to cesium IX columns C13001 or C13003, to HLW [c] feed receipt vessels, or to LAW melter feed preparation vessels.	Process	Pump resin slurry which is unacceptable for off-site disposal.	Resin Transfer Pump P43067
	Monitor	Transfer pump protected by liquid level instrumentation on V43135A/B backed up by ICS control and alarms as required.	

[a] ICS = integrated control system
[b] LAW = low activity waste
[c] HLW = high level waste

Table 3. Resin Recovery System Overflow Routes

Vessel Number	Overflow Route
V43135B	Overflow to V43135A
V43135A	Overflow to V43135B, then V43136
V43136	Overflow to V45009 (Plant Wash Vessel)

Figure 1. System Block Diagram

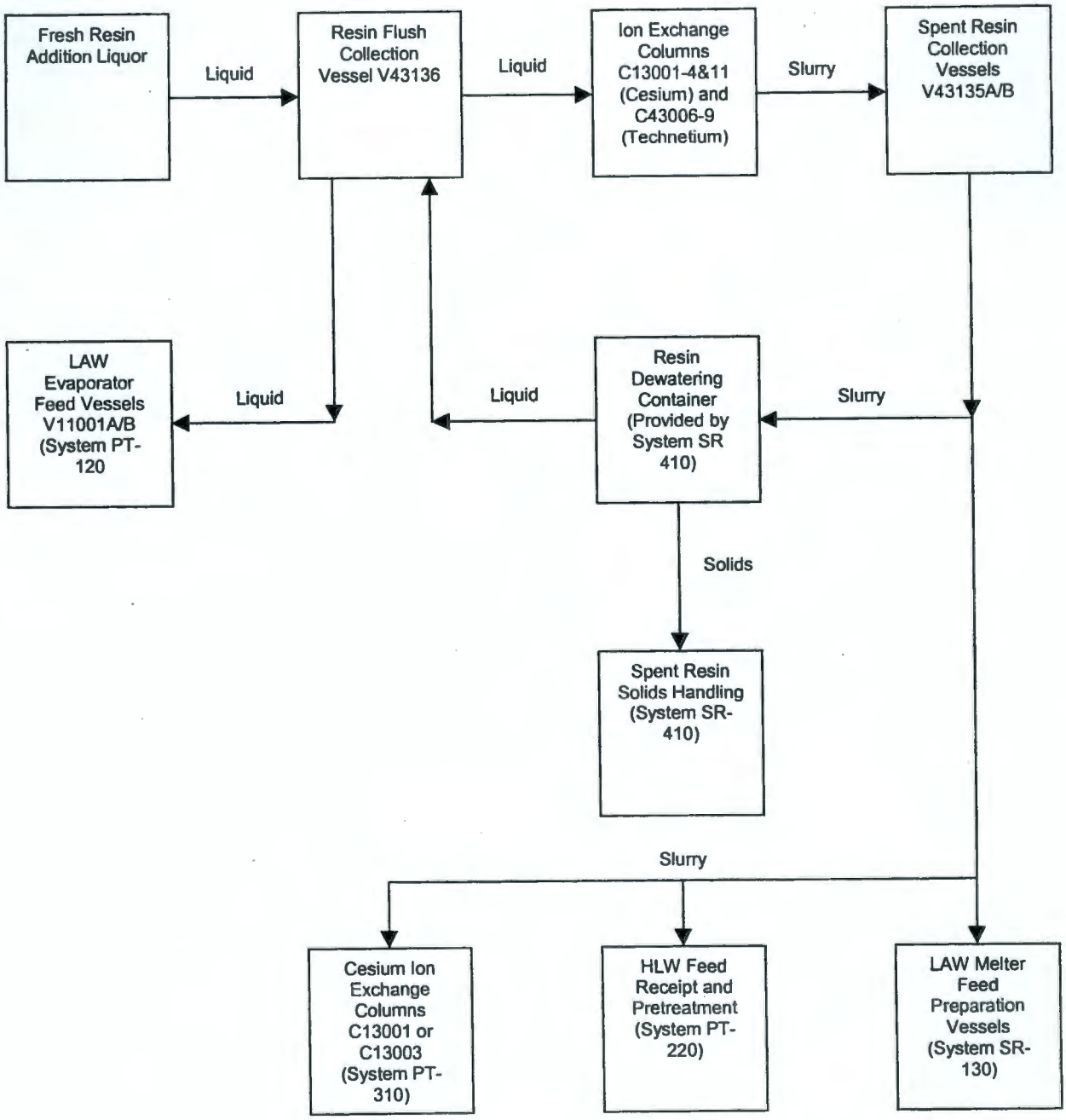

LP Systems 510, 550: LAW Pretreatment Plant Effluent Collection

1. Introduction and Scope

When practical, low level radioactive liquid waste generated by RPP-WTP will be recycled for re-use within the process. When this is not feasible, low level radioactive liquid waste will be delivered to the Liquid Effluent Retention Facility (LERF) and/or the Effluent Treatment Facility (ETF).

The purpose of the LAW Pretreatment Plant (LPP) Effluent Collection System is to receive, store and transfer low level liquid radioactive wastes generated by RPP-WTP. The effluent collection system will act as a final collection point for RPP-WTP low level radioactive liquid wastes prior to transfer to LERF/ETF.

The effluent collection system consists of two sub-systems, LP-510 and LP-550. System LP-510 is located outside the LP building and receives process condensate and low active effluent for storage and transfer. System LP-550 is located inside the LP building and receives suspect active effluent for storage and transfer.

2. Applicable Document

BNFL Inc., 2000, *Process Flow Diagram – LAW Pretreatment Plant Effluent Collection, System LP 510/550*, DWG-W375LP-PR00002, BNFL Inc., Richland, Washington.

3. Description

The primary functions of the effluent collection system are to receive, store and transfer low level radioactive liquid effluent. Operational activities required to achieve the primary functions are as follows:

- Monitor effluent collection
- Mix and neutralize effluent
- Mix and sample effluent
- Discharge and/or recycle effluent.

The major sources of liquid waste are the LAW feed evaporator within the Pretreatment Facility (PT-120) and LAW melter feed evaporator (LP-130) within the LAW Pretreatment Plant (LPP). Both the LAW feed evaporator and LAW melter feed evaporator have inline radiation monitoring on the process condensate to recycle any contaminated condensate back through the evaporator. Therefore, streams transferred to the effluent collection system from these evaporators are considered to be of an activity low enough for acceptance to LERF/ETF or for recycling as process water.

Due to the large volume of "low active" condensate generated from the evaporators, any "suspect active" effluent streams will be segregated to prevent contamination of the process condensate and other feeds to LERF/ETF.

System LP-510 handles low active streams and System LP-550 handles the suspect active streams.

3.1. System LP-510: Process Condensate Collection

System LP-510 is comprised of three process condensate vessels (V45028A/B/C), two process condensate transfer pumps (P45012A/B), and two condensate recirculation pumps (P45319A/B).

3.1.1. Process Condensate Vessels – V45028A/B/C

Vessels V45028A/B/C receive, sample, and discharge low active effluent. The majority of the inventory of vessels V45028A/B/C is process condensate. The inventory of vessels V45028A/B/C is sampled to determine its discharge route prior to discharge. All discharges from vessels V45028A/B/C will be used as "process water." The difference between the amount of process condensate generated and the process water recycle demand defines the amount of process water that will be routed for discharge to LERF/ETF.

Inventory meeting the LERF/ETF acceptance criteria is discharged to LERF/ETF. Instrumentation located on the discharge line to LERF/ETF monitors discharge content, instantaneous flow rate (172-gpm limit), and acceptability compliance. If the inventory is non-compliant with the LERF/ETF acceptance criteria, then it is routed to the LAW Melter Feed Evaporator V41011 for reprocessing (off-normal operation).

During normal operations, vessels V45028A/B/C receive feeds from the following sources:

- LAW Feed Evaporator Condensate Pot (V11005)
- LAW Melter Feed Evaporator Condensate Pot (V41013)
- Alkaline Effluent Vessels (V45013 and V45018).

During normal operations, vessels V45028A/B/C discharge to the following:

- LPP process water recycle header
- PT process water recycle header
- LERF/ETF

3.2. System LP-550: Plant Wash and Drains

System 550 is comprised of a plant wash vessel (V45009), eight plant wash breakpots (V45001-7 & V45012), two plant wash RFD pumps (P45307A/B), two alkaline effluent vessels (V45013 & V45018) and two alkaline effluent transfer pumps (P45039A/B).

3.2.1. Plant Wash Vessel – V45009

The primary function of plant wash vessel V45009 is to receive, store and discharge SBS purge liquor from LAW Vitrification, building interface transfer line drains, and effluent generated from plant wash-down operations within the LPP.

During normal operations plant wash vessel V45009 will receive the following feeds:

- SBS purge liquor from LAW Vitrification SBS Condensate Vessel V25003.
- Drains from LP to LV lines transferring (duty and spare) LAW Melter Feed Evaporator Concentrate.
- Drains from PT to LP lines transferring (duty and spare) LAW Feed Evaporator Condensate.
- Drains from LV to LP lines (duty and spare) transferring SBS purge.
- Drains from LV future to LP lines (duty and spare) transferring SBS purge.

- Drains from HV to LP lines (duty and spare) transferring low activity waste.
- Drains from LV to LP lines (duty and spare) transferring caustic waste.
- Drains from LV future to LP lines (duty and spare) transferring caustic waste.

During non-routine operations plant wash vessel V45009 will receive the following feeds:

- Plant washings from interior surfaces of LPP vessels via breakpots V45001-7.
- Plant washings from LAW Vitrification plant wash vessel V25001.
- Plant washings from future LAW Vitrification plant wash vessel.
- Plant washings from decontamination of cell cladding and cell bulges via breakpots V45001-7.
- Drains from plant wash cabinets.
- Drains from bulges.

Feeds received in V45009 are monitored for pH. The plant washings have the potential to be weakly acidic as there is capability to wash the internal surfaces of vessels with nitric acid from plant wash cabinets. When the pH is within target values, the plant wash is routed by RFD to the LAW Melter Feed Evaporator V41011.

Overflows from the plant wash vessel are routed to a wet sump within the effluent collection cell. Both the vessel and sump are provided with redundant level protection.

Wash rings are used for vessel and breakpot washing. Vessel-emptying ejector W45003 is used for non-routine transfers to vessel V45013 via breakpot V45012. Vessel V45009 and breakpots V45001-7 vent to the vessel vent system via the vessel vent header.

3.2.2. Alkaline Effluent Vessel – V45013

The primary function of alkaline effluent vessel V45013 is to receive, store, and discharge alkaline and other suspect active effluent generated within the LPP.

During normal operations V45013 will receive the following feeds:

- Caustic rinse water from technetium ion exchange columns C43006-9
- Caustic effluent from low active waste vessel V35001
- Caustic effluent from caustic scrubber blowdown vessel V22001
- Process condensate from technetium process condensate breakpot V43075

During non-routine operations, V45013 will receive the following feeds:

- Caustic rinse collection tank V43056
- Plant washings from V45009 via breakpot V45012.

Feeds received in V45013 are sampled to determine if they meet the waste acceptance criteria for discharge to LERF/ETF. As Alkaline Effluent Vessel V45013 is being sampled, Alkaline Effluent Vessel V45018 will be in the receiving mode for streams common to both vessels. If the alkaline effluent meets the LERF/ETF acceptance criteria, it is routed to process condensate vessels V45028A/B/C. The effluent is then recycled or discharged to LERF/ETF. If the plant wash effluent is non-compliant with the LERF/ETF acceptance criteria, it is routed to the LAW Melter Feed Evaporator V41011.

Alkaline Effluent Vessel V45013 will primarily overflow to Alkaline Effluent Vessel V45018 and ultimately overflow to plant wash vessel V45009.

Wash rings are used for vessel and breakpot washing. Vessel-emptying ejector W45009 is used for non-routine transfers to vessel V45009. Vessel V45013 and breakpot V45012 vent to the vessel vent system via the vessel vent header.

3.2.3. Alkaline Effluent Vessel - V45018

The primary function of alkaline effluent vessel V45018 is to receive, sample and discharge alkaline and other suspect active effluent generated within the LPP.

During normal operations, V45018 will receive the following feeds:

- Caustic rinse water from technetium ion exchange columns C43006-9
- Caustic effluent from low active waste vessel V35001
- Caustic effluent from caustic scrubber blowdown vessel V22001
- Process condensate from technetium process condensate breakpot V43075

Feeds received in V45018 are sampled to determine if they meet the waste acceptance criteria for discharge to LERF/ETF. As Alkaline Effluent Vessel V45018 is being sampled, Alkaline Effluent Vessel V45013 will be in the receiving mode for streams common to both vessels. If the alkaline effluent meets the LERF/ETF acceptance criteria, it is routed to process condensate vessels V45028A/B/C. The effluent is then recycled or transferred to LERF/ETF. If the alkaline effluent is non-compliant with the LERF/ETF acceptance criteria, then it is routed to the LAW Melter Feed Evaporator V41011.

Alkaline Effluent Vessel V45018 will primarily overflow to Alkaline Effluent Vessel V45013 and ultimately overflow to plant wash vessel V45009.

Wash rings are used for vessel washing. Vessel-emptying ejector W45019 is used for non-routine transfers to vessel V45009. V45018 vents to the vessel vent system via the vessel vent header.

4. Functions

Structures, systems, and components (SSC) are items that perform specific functions that are integral to the maintenance of operations. Examples of SSC are instrumentation and overflow lines.

Table 1 summarizes the functions for SSC in the LPP effluent collection system.

Table 1. Functions for LPP Effluent Collection

Plant Item	SSC	Function
V45001-7	T-45045A-G	Detect high temperature in ejector discharge during transfer indicating ejector is blowing steam and not transferring liquor.
	Overflow line	Prevent liquid from entering the vessel vent system.

Table 1. Functions for LPP Effluent Collection

Plant Item	SSC	Function
V45009	L-450141	Detect high level prior to overflowing and detect low level to protect pump.
	L-450140	Provide level protection if L-450141 fails.
	A-450145	Detect low pH prior to transferring.
	T-450142	Detect high temperature prior to transferring.
	Overflow line	Prevent liquid from entering the vessel vent system.
V45012	T-45033A	Detect high temperature in ejector discharge during transfer indicating ejector is blowing steam and not transferring liquor.
	Overflow line	Prevent liquid from entering the vessel vent system.
V45013	L-450001	Detect high level prior to overflowing and detect low level to protect pump.
	Overflow lines	Remove liquid prior to backing up into vent system.
V45018	L-450011	Detect high level prior to overflowing and detect low level to protect pump.
	Overflow lines	Prevent liquid from entering the vessel vent system.
P43039A/B	P-45005/6B	Detect low pressure when operating pump.
V45028A	L-450151	Detect high level prior to overflowing and detect low level to protect pump.
	Overflow Line	Prevent liquid from entering the vessel vent system.
V45028B	L-450161	Detect high level prior to overflowing and detect low level to protect pump.
	Overflow Line	Prevent liquid from entering the vessel vent system.
V45028C	L-450171	Detect high level prior to overflowing and detect low level to protect pump.
	Overflow Line	Prevent liquid from entering the vessel vent system.
P45319A/B	P-45068/9B	Detect low pressure when operating pump.
P45012A/B	F-450187	Detect high flow when operating pump.
	C-450184	Detect high conductivity prior to discharge.
	A-450185	Detect low pH prior to discharge.
	R-450186	Detect high gamma radiation prior to discharge to LERF/ETF.
	P-45075B	Detect low pressure when operating pump.

5. Normal Operations

Each major plant item within the pretreatment effluent collection system must follow a predetermined process control system sequence to reliably perform its functional purpose. Each step in the process control system sequence is affected when an inhibit or trip is reached.

Table 2 outlines the process control system sequences and the associated inhibits and trips for each major plant item within the LPP effluent collection system during normal and non-routine operations.

Table 2. Normal and Non-routine Operations for LPP Effluent Collection

Plant Item	Operation	Process Control System Sequence	Inhibits and Trips
V45012	Receipt[1]	Start ejector to transfer plant washings from vessel V45009.	Inhibit transfer on high level in V45013. Stop ejector on high temperature in V45012, or low level in V45009.
V45013	Receipt[1]	Open feed valve to V45013 from V22001. Start transfer device to transfer caustic effluent from V22001.	Inhibit transfer if feed valve closed or high level in V45013. Stop transfer device on low level in V22001.
		Open C43006-9 caustic rinse recycle valve to bypass V43056 or start V43056 RFD to recycle caustic rinse.	Inhibit transfer on high level in V45013. Close valve and/or stop RFD on low level in V43056.
		Open feed valve to V45013 from V35001. Start transfer device to transfer low active waste from V35001.	Inhibit transfer if feed valve closed or high level in V45013. Stop transfer device on low level in V35001.
		Open feed valve to V45013. Start pump to transfer process condensate from V43075	Inhibit transfer if feed valve closed or high level in V45013. Stop pump on low level in V43075.
	Storage	Start RFD P45037 to obtain sample.	Inhibit sampling on low air pressure to RFD, low level in V45013 or when V45013 is receiving effluent. Stop RFD on completion of sampling cycle.

Table 2. Normal and Non-routine Operations for LPP Effluent Collection

Plant Item	Operation	Process Control System Sequence	Inhibits and Trips
	Transfer	Open suction Valve AV451062 to Pump P45039A/B. Open Valve to V45028A/B/C **AND** Start Pump P45039A or B to transfer low-active effluent to V45028A/B/C.	Inhibit transfer if suction or discharge valve closed, V45013 is receiving effluent, high level in V45028A/B/C or low level in V45013.
		Open Valve to V41014 **AND** Start Pump P45039A or B to transfer off-spec effluent to V41011 via V41014.	Inhibit transfer if suction or discharge valve closed, high level in V41011 or low level in V45013. Stop transfer if high level in V41011, low level in V45013, or high level in V41053.
V45018	Receipt[1]	Open feed valve to V45018 from V22001. Start transfer device to transfer caustic effluent from V22001.	Inhibit transfer if feed valve closed or high level in V45018. Stop transfer device on low level in V22001.
		Open C43006-9 caustic rinse recycle valve.	Inhibit transfer on high level in V45018.
		Open feed valve to V45018 from V35001. Start transfer device to transfer low active waste from V35001.	Inhibit transfer if feed valve closed or high level in V45018. Stop transfer device on low level in V35001.
		Open feed valve to V45018. Start pump to transfer process condensate from V43075	Inhibit transfer if feed valve closed or high level in V45018. Stop pump on low level in V43075.
	Storage	Start RFD P45038 to obtain sample.	Inhibit sampling on low air pressure to RFD, low level in V45018 or when V45018 is receiving effluent. Stop RFD on completion of sampling cycle.
	Transfer	Open suction valve AV451044 to pump P450239A/B. Open Valve to V45028A/B/C **AND** Start Pump P45039A or B to transfer low-active effluent to V45028A/B/C.	Inhibit transfer if suction or discharge valve closed, V45018 is receiving effluent, high level in V45028A/B/C or low level in V45018. Stop transfer if high level in V45028A/B/C or low level in V45018.
		Open Valve to V41014 **AND** Start pump P45039A or B to transfer high-active effluent to V41011 via V41014.	Inhibit transfer if suction or discharge valve closed, high level in V41011 or low level in V45018. Stop transfer if high level in V41011, low level in V45018, or high level in V41053.
V45001-7, V45009	Receipt[1]	Start ejector to transfer plant washings from vessels.	Inhibit transfer on high level in V45009 or from multiple ejectors simultaneously. Stop ejector on high temperature in V45001-7, or low level in vessels.
		Start ejector to transfer plant washings from sumps.	Inhibit transfer on high level in V45009 or from multiple ejectors simultaneously. Stop ejector on high temperature in V45001-7 or low level in sumps.
		Start transfer of plant washings from bulges.	Inhibit transfer on high level in V45009 or from multiple bulges simultaneously.

Table 2. Normal and Non-routine Operations for LPP Effluent Collection

Plant Item	Operation	Process Control System Sequence	Inhibits and Trips
V45009	Receipt[1]	Start transfer of wash water from V25001.	Inhibit transfer on high level in V45009 or without permissive from LPP. Stop transfer on low level in V25001.
	Storage	Start RFD P45001 to measure pH.	Inhibit sampling on low air pressure to RFD jet pumps.
		Start NaOH pump & open valve to add NaOH required for neutralization. Repeat addition until pH is above 8 & stop RFD P45001.	Close valve & stop pump on high totalized flow from NaOH tank, low level in NaOH tank, or high pH (above 8) in V45009.
	Transfer	Start RFD P45307A/B to transfer plant wash to V41011 via V41014.	Inhibit transfer if discharge valve closed, high level in V41011, low level in V45009, low pH or high temperature. Stop transfer if high level in V41011, low level in V45009, or high level in V41053.
V45028A	Receipt	Open inlet valves & start transfer of condensate from upstream sources.	Inhibit transfer on high level in V45028A, during discharge from V45028A, on low level in upstream sources.
	Storage	Open AV451059 and start P45319A/B to recirculate vessel contents before commencing sample collection (non-routine operation).	Inhibit sampling on low recirculation rate, low level in V45028A, or when V45028A is receiving. Stop recirculation upon collection of sample.
	Transfer	Open valve AV451008 (as sentenced by sampling or condensate recycle demands).	Inhibit opening of valve on high level in V41014, noncompliance with LERF/ETF acceptance criteria, high level in downstream LPP or PT users, or low level in V45028A.
V45028B	Receipt	Open inlet valves & start transfer of condensate from upstream sources.	Inhibit transfer on high level in V45028B, during discharge from V45028B, on low level in upstream sources.
	Storage	Open AV451060 and start P45319A/B to recirculate vessel contents before commencing sample collection (non-routine operation).	Inhibit sampling on low recirculation rate, low level in V45028B, or when V45028B is receiving. Stop recirculation upon collection of sample.
	Transfer	Open valve AV451009 (as sentenced by sampling or condensate recycle demands).	Inhibit opening of valve on high level in V41014, noncompliance with LERF/ETF acceptance criteria, high level in downstream LPP or PT users, or low level in V45028B.
V45028C	Receipt	Open inlet valves & start transfer of condensate from upstream sources.	Inhibit transfer on high level in V45028C, during discharge from V45028C, on low level in upstream sources.
	Storage	Open AV451061 and start P45319A/B to recirculate vessel contents before commencing sample collection (non-routine operation).	Inhibit sampling on low recirculation rate, low level in V45028C, or when V45028C is receiving. Stop recirculation upon collection of sample.

Table 2. Normal and Non-routine Operations for LPP Effluent Collection

Plant Item	Operation	Process Control System Sequence	Inhibits and Trips
	Transfer	Open valve AV451015 (as sentenced by sampling or condensate recycle demands).	Inhibit opening of valve on high level in V41014, noncompliance with LERF/ETF acceptance criteria, high level in downstream LPP or PT users, or low level in V45028C.

1. Steps may occur in any order.

6. Safety and Operability Interlock Requirements

Table 3 provides a preliminary overview of the interlock features necessary to maintain operability.

Table 3. Operability Interlocks for LPP Effluent Collection

Plant Item	Condition	Interlocks
V45012	High-high temperature	Stop all ejectors feeding V45012.
V45013	High-high level	Stops all feeds to V45013 and feeds via V45012.
	Low-low level	Stops transfer pump P45039A/B, sampling RFD and steam ejector W15009.
V45018	High-high level	Stops all feeds to V45018.
	Low-low level	Stops transfer pump P45039A/B, sampling RFD and steam ejector W15019.
V45001-7	High-high temperature	Stop emptying ejectors in vessels, sumps, & bulges.
V45009	High-high level	Stop all transfers in LPP apart from ejector W45003 in V45009.
	Low-low level	Stops RFD pump P45307A/B, sampling RFD and steam ejector W45003.
	High-high pH	Close NaOH plant wash solvent valve.
V45028A	High-high level	Stops all feeds to V45028A.
	Low-low level	Stops transfer pump P45012A/B.
V45028B	High-high level	Stops all feeds to V45028B.
	Low-low level	Stops transfer pump P45012A/B.
V45028C	High-high level	Stops all feeds to V45028C.
	Low-low level	Stops transfer pump P45012A/B.

LP System 540: LAW Pretreatment Plant Vessel Vent

1. Introduction

The LAW Pretreatment Vessel Vent System receives off-gases from LAW pretreatment (LP) vessel vents and/or exhaust streams from reverse flow diverters (RFD's) and pulsejet mixers (PJM's) originating from LP process systems.

The LP Vessel Vent System includes equipment to remove airborne radionuclides and to treat the off-gasses originating from evaporator overheads. After treatment in the LP Vessel Vent System, the treated vessel off-gas proceeds to the LP Vessel Vent Extract System.

The upstream and downstream systems have functions that are important to and integral with the LP Vessel Vent System. Negative pressure is maintained in each process vessel, relative to the process cell, which provides the containment function for airborne radionuclides. The motive force is provided by the ventilation fans downstream of the vessel vent system.

2. Applicable Document

PFD: DWG-W375LP-PR00005

3. Functions

The primary functions of the LP Vessel Vent System include:

- Treat volatile organic gases

Secondary functions of the LP Vessel Vent System in combination with other systems include:

- Maintaining negative vessel pressures in an acceptable range
- Removal of particulate solids from the air-stream.
- Prevention of condensation in the HEPA filters (heating)

All these functions are described in more detail in the following subsections.

3.1 Operational Functions
3.2 Safety Related Functions
3.3 Non-safety related functions

3.1. Operational Functions

The LP Vessel Vent System contains equipment that perform the following operational functions:

- Reducing VOC concentrations in the off gas with the VOC unit
- Reducing VOC emissions in the off gas with carbon beds
- Control system operating pressure and exhaust flow rates
- Provide for remote and automatic operations
- Allow for contact maintenance

Performance of these operational functions will accomplish the primary functions; in addition the secondary functions will be accomplished in combination with the air inlet, exhaust collection system, and the downstream LP Vessel Vent Extract System.

The operational functions can include the following work activities:

- Containing the waste
- Monitoring the system
- Controlling air flows and pressures

Descriptions of the work activities and a short title for each work activity are shown in Table 1.

3.2. Safety Related Functions

The LP Vessel Vent System in combination with upstream and downstream systems provides containment of radionuclides in the exhaust air stream. There are no structures, systems, and components (SCCs) associated with safety control strategies identified in LPP.

3.3. Non-Safety Related Functions

Non-Safety related functions include the following:

- Monitoring inlet pressures. The inlet pressures of the collection headers entering the LP Vessel Vent System will be monitored.

- In-cell leakage detection and alarm. The area drainage sump will have a level switch to detect and alarm leakage in the cell.

4. Description

This section is a general description of the LP Vessel Vent System.

The off-gas streams from the LP vessels flow through a network of subheaders (piping) to two major collection headers. The vessel outlet vent lines are part of systems separate from the LP Vessel Vent System. The collection piping system is arranged into two process streams:

- VOC – Oxidizer Header
- Vessel vents header

The function and composition of each header and process stream determines the type of treatment needed. The equipment components and function of each are described in detail in the following sections and subsections.

The LP Vessel Vent System includes a VOC (Volatile Organic Carbon) oxidation unit, carbon bed adsorbers, and pressure control devices to control pressure of process streams in this system. The equipment listed treats the off-gasses originating from the process vessels. The exhaust from the reverse flow diverters (RFD's) and pulse jet mixers (PJM's) is gathered in a separate header that joins the vessel vent stream downstream of the VOC unit. The combined air stream is routed to the LP Vessel Vent Extract System.

The LP Vessel Vent Extract System includes a hot air injection system with electric heating coils and backflow high efficiency particulate air (HEPA) filters. Downstream of the hot air injection, the LP Vessel Vent Extract System includes HEPA filters, extract fans, stack air stream monitoring, and the duct to the pretreatment building exhaust stack. The carbon bed organic adsorbers are also part of system LP770. They are located downstream of the HEPA filters and upstream of the extract fans.

Variable speed fans provide pressure control on the overall vessel vent air stream. There is also a vortex amplifier (VXA) pressure controller on the subheader from the vessel vents and a pressure control damper on the RFD/PJM header.

The general description of the LP Vessel Vent System is provided in the following subsections.

4.1 VOC oxidation unit
4.2 Carbon bed adsorbers
4.3 Vortex Amplifiers
4.4 Collection (exhaust piping system)

4.1. VOC oxidation unit

The vessel vent exhaust streams are collected into two major headers: VOC-header, and vessel vent header, prior to treatment in the LP Vessel Vent System. The VOC-evaporators stream is treated in a VOC Oxidation unit. The VOC unit is a thermal destruction process for any organic vapors in the exhaust stream.

The VOC unit destroys organic vapors by simply heating the gas stream to high temperatures where they decompose into CO_2 and water vapor. The gas enters the unit through a heat exchanger, is preheated to its combustion temperature by an electric heater, and is held at this temperature long enough to ensure nearly complete oxidation of all organic vapors present. Gas leaves through the first heat exchanger to allow heat recovery and minimize energy consumption.

4.2. Carbon Bed Adsorbers

The LP Vessel Vent Extract System includes a hot air injection system with electric heating coils and high efficiency particulate air (HEPA) filters, backflow HEPA filters, extract fans, stack air stream monitoring, and the exhaust stack. The carbon bed adsorbers are located downstream of the HEPA filters and upstream of the extract fans, both of which are part of the LP Vessel Vent Extract System.

Two parallel carbon beds are provided in the design. A bypass line and valve are included in the event both units are out of service or are not needed. Normal operation is one unit on line and the other in maintenance mode.

The carbon beds function is to remove volatile organic carbon (VOC) from the combined air streams from process vessels. The VOC oxidation unit removes most of the VOCs from the evaporator and condensate tanks on that header. The carbon beds will remove a portion of the VOCs remaining in each stream, and further reduce plant emissions.

4.3. Vortex Amplifiers

The vessel vent exhaust streams are collected into two major headers: VOC-header, and vessel vent header, prior to treatment in the LP Vessel Vent System. The VOC-evaporators stream is treated in a

VOC Oxidation unit. The two streams are then combined before additional treatment in downstream equipment.

The pressure drops over the HEPA filters will rise as more material is deposited on them.

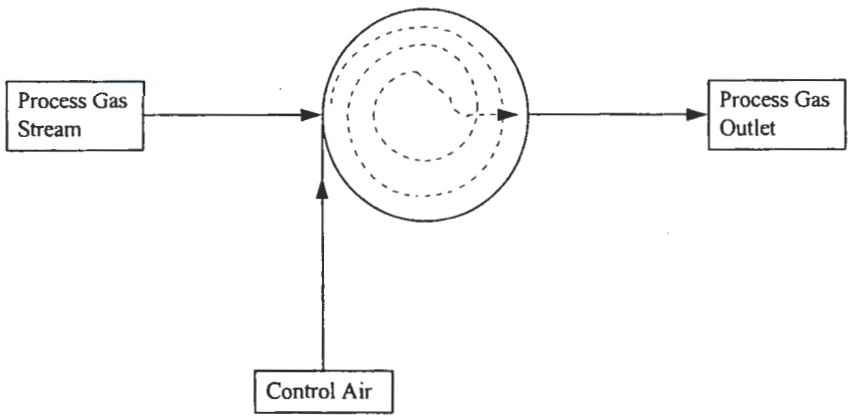

Notes : Dotted line shows flow pattern of control air.

Control valves (modulating) outside of the active cell regulate the flow of control air. As flowrate increases, the intensity of the swirling vortex in the vortex amplifier increases, and so does the pressure drop. Addition of a vortex amplifier on the vessel vent stream allows vessel vent header pressure to be balanced with the VOC unit.

4.4. Collection (exhaust piping system)

The vessel vent exhaust streams and the PJM and RFD exhaust vents are collected into headers. From the individual process vessels a vent line routes exhaust gases to the header. The header locations and the overall flow schematic have not been determined yet and will be influenced by the final plant layout.

Final sizing of the individual exhaust vent lines will be determined by airflow, process pump (RFD) capacities for filling vessels, and other potential pressurization scenarios. The individual exhaust vent lines, and the exhaust headers will also be sized to minimize overall pressure drop and help balance the system as needed.

5. Operations

The major features of the LP Vessel Vent System are as follows:

- Reduce volatile organic emissions.
- Combine treated vessel vent stream with RFD and PJM exhausts.

Operation of the LP Vessel Vent System interfaces with the operation of related upstream and downstream systems. The operational features of the overall process ventilation system also include the following:

- Contain the waste
- Monitor the system
- Control air flows and pressures
- Remove particulates from the vent system off-gas
- Heat the vent system off-gas to protect the HEPA filters from moisture

5.1. Safety and Interlock Requirements

The LP Vessel Vent System has safety features. Typical safety design features included in the LP Vessel Vent System are as follows:

- The design of the vessel vent lines will take into consideration the hydrostatic level (to prevent liquid from entering the system).

- The collection piping from the vessel vents, RFD's, and PJMs will be designed and routed in accordance with the Process Piping Design Guide.

- Traps will be fitted with water flush capability in order to clear any potential line blockages.

- The local drainage sump will have an alarm/start set point to prevent flooding.

The LP Vessel Vent System interlocks necessary to maintain safety and operations will be identified when information is available.

Table 1. Work Activities for LP Vessel Vent System

Work Activity	Short Title	Definition
Containing the waste	Contain	Process equipment to be monitored for failure/leakage.
Monitoring the system	Monitor	Instrumentation and sampling will be used to monitor the system's operation.
Controlling air flows and pressures	Control	Operating setpoints for pressure/flow control devices will be adjusted to balance flow and regulate overall system flows.

LV Systems 110, 131, 132, and 133: LAW Melter Feed

1. Introduction and Scope

The Low Activity Waste (LAW) melter feed systems prepare feed for the LAW melters to produce a vitrified product. The process consists of mixing appropriate amounts of glass forming chemicals with the blended radioactive feed and feeding the resulting slurry to the melters. The LAW melter feed systems consists of the following equipment:

- System 110:
  - concentrate receipt vessels
- Systems 131, 132, 133:
  - glass former feed hoppers, melter feed preparation vessels, and melter feed vessels.

2. Description

The LAW melter feed systems consist of the concentrate receipt vessels, the glass former feed hoppers, the melter feed preparation vessels, the melter feed vessels, and the associated valve and pump bulges.

The feed to the LAW melters consists of LAW concentrate mixed with glass formers. The LAW feed system receives LAW concentrate from the LAW Pretreatment facility and mixes the waste with glass formers. The mixed melter feed is transferred to the melter feed vessels, where it is pumped to the LAW melters.

2.1. LAW Concentrate Receipt Vessels

The LAW concentrate receipt vessels receive LAW concentrate from the LAW pretreatment plant. The vessels are located in the process cells. Each vessel is equipped with the following:

- Mechanical agitator
- Two pumps (A/B) to transfer LAW concentrate
- Pneumercator for liquid level and density measurement
- Liquid level instrument
- Thermowell/temperature sensor for temperature measurement
- Steam jacket to prevent cooling and solids precipitation
- Internal wash rings for periodic wash-down
- Overflow to C3/C5 Drain/Sump Collection Vessel
- Spare nozzles

Each pair of pumps is located in a bulge. Valving in each bulge allows the LAW concentrate to be routed to any of the feed preparation vessels, to any of the concentrate receipt vessels, or to the plant wash vessel for vessel clean-out.

2.2. LAW Glass Former Feed Hoppers

The glass former feed hoppers receive blended glass formers and sucrose by dense-phase pneumatic conveying from the LAW transporters located at the glass former handling facility. Each feed hopper is equipped with a pneumatic blending head at the base of the hopper to re-blend the glass former feed.

Compressed air from the plant process air system is supplied to the pneumatic blending head at the base of the feed hoppers. The blending control system opens and closes air valves to the blending head to create air pulses to agitate and blend the hoppers' contents.

The feed hoppers are equipped with filters to remove the dust from air used for pneumatic conveying and blending. It is anticipated that a series of single filter cartridges will be mounted on the top of the hoppers. At this stage of the design, the required filter surface area and number of filters are not known. The filters are cleaned by introducing compressed air through the cleaning nozzle to blow accumulated dust back into the hoppers.

The feed hoppers are equipped with load cells to weigh the glass formers to confirm that all of the material in the upstream blending silo is conveyed to the feed hoppers and to confirm that all of the glass formers are transferred out of the feed hoppers to the melter feed preparation vessels.

After the blending cycle the glass formers are gravity-fed with a rotary feeder into the melter feed preparation vessels, where the blended glass formers are mixed with the waste. This equipment is located in an isolated area that serves as a contamination barrier between the melter feed preparation vessels and the glass former supply. The rotary valve controls the rate of glass former addition into the melter feed preparation vessels.

2.3. LAW Melter Feed Preparation Vessels

The LAW melter feed preparation vessels mix LAW concentrate from the concentrate receipt vessels with glass formers and sucrose from the glass former feed hoppers. The vessels are equipped with the following:

- Mechanical agitator
- Vertical turbine pump
- Pneumercator for liquid level and density measurement
- Liquid level instrument
- Thermowell/temperature sensor for temperature measurement
- Internal wash rings for periodic wash-down
- Overflow to the corresponding melter feed vessel
- Spare nozzles

The turbine pump transfers waste via a valve bulge. Valving in the bulge allows the waste to be routed to the corresponding melter feed vessel, to the other feed preparation vessels in the event of melter shutdowns, to the same feed preparation vessel to recirculate for sampling, or to the plant wash vessel for vessel clean-out.

2.4. LAW Melter Feed Vessels

The LAW melter feed vessels receive blended melter feed, consisting of LAW concentrate and glass formers, from the melter feed preparation vessels. The vessels are equipped with the following:

- Mechanical agitator
- Six air displacement slurry (ADS) pumps to transfer feed to the corresponding LAW melter
- Vertical turbine pump
- Pneumercator for liquid level and density measurement
- Liquid level instrument
- Thermowell/temperature sensor for temperature measurement
- Miscellaneous solution addition line
- Internal wash rings for periodic wash-down
- Overflow to the corresponding melter feed preparation vessel
- Spare nozzles

The turbine pump transfers waste via a valve bulge. Valving in the bulge allows the waste to be routed to the corresponding melter feed preparation vessel in the event of melter shutdowns, to the same melter feed vessel to recirculate for sampling, or the plant wash vessel for vessel clean-out.

The ADS pumps for transferring feed to the melters are built around the principle of using air to move radioactive liquids. The few moving parts in ADS pumps make for virtually maintenance-free operation. The key to the ADS pump operation is a two-way valve that alternately cycles between the simultaneous opening of the pump chamber and closing the feed line, then switching position to opening the feed line and closing the pump chamber to the waste. The pump chamber is submerged in the waste slurry. A pneumatic cylinder operates the two-way valve at the base of the pump chamber via push rods. The pneumatic cylinder actuates to open the pump chamber to the waste. The pump chamber vent valve opens, allowing waste to flow into the pump chamber due to the vessel liquid head. With the pump chamber full of waste, the pneumatic cylinder closes the pump chamber port and opens the feed line. The pump chamber is pressurized with air to discharge the waste. The control and vent valves and pneumatic cylinder are located in the ADS module inside the process cell. On shutdown of the ADS pump, flush water clears the pump, line, and nozzle.

Solutions which may be added via the miscellaneous solution addition line include an antifoaming agent to control foaming in the melter feed vessel due to the mechanical agitator and a sucrose solution to reduce foaming in the melter.

3. Functions

This system will be designed to include the following functions:

- Prevent back-flow of radioactive gases or solutions into non-radioactive areas.

- Protect workers from glass former dust hazards. The glass former feed hoppers are equipped with filters to remove dust from the air exhausted from the hoppers. This system needs to be evaluated to ensure that it provides adequate protection from dust hazards.

- Protect workers from contact with radioactive slurries during all operations, including pumping and sampling.

- Receive and transport radioactive slurries and solutions.
- Obtain representative samples of slurries and solutions from the concentrate receipt vessels.
- Homogenize vessel contents where samples are taken for process and glass quality control.
- Mix glass formers with radioactive waste concentrate to a uniform blend.

4. Normal Operations

Batches of LAW concentrate are received from the LAW Pretreatment into the concentrate receipt vessels via six transfer pipelines. The waste is routed to the appropriate concentrate receipt vessel via a valve bulge.

Sampled and analyzed feed is transferred from the concentrate receipt vessels to the melter feed preparation vessels. With the feed preparation vessel agitator operating, glass formers are fed from the glass former feed hoppers into the melter feed preparation vessels. A rotary feeder regulates the rate of glass former addition. The agitator is operated continuously to maintain the glass formers in suspension.

The blended melter feed is then transferred from the melter feed preparation vessels into the melter feed vessels. From the melter feed vessels, the melter feed is transferred to the LAW melters.

5. Safety and Interlock Requirements

Preliminary safety and interlock requirements are indicated in this section.

The LAW concentrate receipt vessels, the LAW melter feed preparation vessels, and LAW melter feed vessels will have instrumentation and interlocks to indicate and/or prevent the following conditions:

- Vessel overflow
- Inadvertent gas/steam flowing into the vessel or being generated
- Loss of vessel integrity
- Loss of agitator function
- Agitator not operated at low liquid level to prevent agitator and/or vessel damage,
- Temperature, and/or level

The melter feed pumps are shutdown if there is indication that the pumping system has plugged, lost its integrity, or cease to function properly or melter operations warrant pump shutdown. These conditions could be indicated by:

- High or low pump system pressure
- Loss of flow indication
- Loss of power to the melters
- High or low melter pressure
- High melter glass level
- Abnormal melter off gas system temperatures, pressures, and flows

The glass former feed hoppers will include an interlock to prevent the transfer of blended glass formers to the LAW melter feed preparation vessel if the agitator is not operating.

LV Systems 221-226: LAW Melter Glass Pour

1. System Scope

This document provides the scope, functions, requirements, and operation of LV Systems 221-226, LAW Glass Pour. Systems 221 through 226 are nearly identical with the main difference being that they serve different glass pour lines of different melters in the LAW vitrification plant. The system numbering is defined to serve the following melters and glass pour lines:

- System LV-221: Melter 1, line 1
- System LV-222: Melter 1, line 2
- System LV-223: Melter 2, line 1
- System LV-224: Melter 2, line 2
- System LV-225: Melter 3, line 1
- System LV-226: Melter 3, line 2

The scope of LV Systems 221-226 covers the following:

- Interface between container and melter discharge
- Glass pour cave, airlock, and their features
- Turntable for handling of product containers
- Elevator for raising and lowering containers to the melter discharge
- Mechanical installation of container fill level detection equipment
- Maintenance and recovery features for glass pour operations

2. Functions

Function of Systems 221-226 is to handle and position product containers for filling with LAW glass product. Systems shall provide adequate maintenance features to ensure operability for a 40 year design life. Systems will incorporate features for limiting personnel access as determined necessary. Following are functions for specific system equipment.

2.1. Container Turntable

- Provide handling and positioning of 3 product containers for import/export, glass filling, and cooling

- Each turntable should be designed for a maximum load of three full containers plus any additional equipment weight during worst case operation.

- Turntable design must operate for the 5 year melter life without maintenance to in-cave components

- Overpack portion of the turntable in contact with the product container will be removable for maintenance.

2.2. Container Elevator

- Provide lift of product containers from the turntable to the glass pour seal head for filling.
- Provide container weight to indicate empty or full container
- Maintain container in the raised position during the filling cycle.

- Elevator design shall provide recovery features from credible failure scenarios.

2.3. Glass Pour Seal Head

- Provide containment of glass pour stream
- Provide airtight connection between the container opening and the melter discharge
- Provide a means of physically isolating the melter discharge from the glass pour cave.
- Provide remote viewing of the glass pour stream and of the container interface
- Provide radiological shielding to R3 levels around the seal head and product container top
- Provide airtight containment between the C5 pour cave and the C3 operating area.

2.4. Container Cooling Vent Station

- Provide local ventilation for recovery of glass off-gassing.

3. System Description

3.1. System Equipment, Arrangement, Location

The LAW vitrification plant has three glass melters. Each melter has two glass discharges which operate independently. Each melter discharge is provided with a glass pour cave and associated features for filling a container with glass. The melter will alternate filling containers in each pour cave. After a container is filled in one pour cave the melter will begin filling the next container in the other pour cave. Each pour cave is physically isolated from the other for maintenance access.

The glass pour caves contain equipment for handling of the LAW product containers, and interfacing the container to the melter discharge. Operations for this system occur with the following major pieces of equipment:

- Container Turntable
- Container Elevator
- Glass Pour Seal Head

3.1.1. Container Turntable

A container turntable is provided in each pour cave for handling containers. The turntable accommodates three containers and rotates to position them at these three stations

- Container Import/Export Station
- Container Fill Station
- Container Cooling Station

At the container import/export station, the product container pour cave transfer system (LV System 313) interfaces with the turntable for container changeout. Full product containers are removed from the unstable and replaced with empty containers using the LV System 313 monorail hoist. Container lids are also handled by LV System 313.

At the container fill station, the turntable interfaces with the container elevator for raising containers to the melter discharge. The elevator removes containers from the turntable to fill them with glass. After filling, containers are lowered back to the turntable.

At the container cooling station a ventilation shroud is lowered to the full container. The shroud removes any offgassing from the freshly poured glass to the C5 ventilation system. Following the cooling cycle the shroud is retracted for rotation of the turntable.

At each of the three turntable stations a linear lock is engaged into the turntable for final positioning. Linear movement of the lock is accomplished with an out of cave actuator and thru wall drive components. Rotary drive is accomplished with a large bearing and ring gear in the turntable driven by an out of cave motor and thru wall drive shaft.

At each container location in the turntable is a lower overpack section which locates the containers position and provides support. The lower overpack sections are removable for decontamination or maintenance as needed. Containers remain in the overpack during the elevating and glass filling cycle.

3.1.2. Container Elevator

The container elevator raises containers and their overpack support from the turntable up to the glass pour seal head for container filling. The elevator consists of an elevating table supported by rollers running in a vertical guide track. Drive for the elevator is provided by a screw and traveling nut secured to the elevating table. At the upper position a lock bolt is engaged to ensure elevator position during the container fill cycles. After container filling, the lock bolt is disengaged and the container lowered to the turntable.

The elevator guide track is mounted in an open slot in the pour cave wall with removable shield plates installed on the out cave side. This arrangement provides access to the elevator components for maintenance and recovery without manned entry to the C5 pour cave. A maintenance room surrounds the out cave side of the elevator.

The elevator is equipped with features to provide a weight of the product container being supported. Weight is used to verify that a container is present and that it is not full of glass. The weight must be between established minimum and maximum values for glass pouring to occur. Additionally, the weight can be used to ensure that container filling is occurring and provide the rate of glass pouring. The weight indication is affected by external factors such as force on the container due to the seal head bellows and thermal expansion effects. These factors are small compared to the approximate empty and full container weight. The elevator weight is not intended to give an accurate weight of the container. It is merely used as indication of container presence and condition.

3.1.3. Glass Pour Seal Head

The glass pour seal head interfaces between the melter discharge and the product container for glass pouring. The seal head consists basically of a metal bellows arrangement which is connected to the melter discharge with the other end of the bellows open for connection to product containers. The bellows is mounted into an enclosed shielded metal shroud at the +3 ft elevation. The shroud, constructed of carbon steel plate, is mounted on rails to provide movement for seal head maintenance. The shroud provides an airtight seal to isolate the C5 pour cave from the operating area at the +3 ft elevation. On the inside of the shroud is rigid insulation and stainless steel cladding to reduce the shroud external temperature.

Mounted between the seal head bellows and the melter discharge is a manually operated isolation gate valve. The gate valve is normally locked in the open position and only closed during manned entry to the pour cave. Closure of the isolation gate prevents unplanned glass discharge during in-cave maintenance activities.

Within the seal head bellows assembly is a camera viewport for visually monitoring the glass pour stream. An endoscope with integral lighting extends from the viewport to outside of the seal head shroud where a camera is mounted for viewing. The endoscope is air purged for cooling.

At the interface between the seal head bellows and the container is a compliant high temperature seal providing an airtight connection to the container opening. The seal is a double seal arrangement to insure an airtight connection is obtained.

Within the seal head shroud is a closed circuit TV (CCTV) camera for viewing makeup of the container to the seal head. The CCTV camera can be replaced from outside of the shroud. Also installed within the shroud is a thermal imaging camera and dual gamma detectors for monitoring of the container glass fill level.

3.1.4. Miscellaneous Pour Cave Features

Above the turntable import/export station are redundant ultrasonic sensors to confirm lid removal from empty containers. The lid detector will be interlocked to prevent filling of containers that do not have their temporary lids removed.

The glass pour caves are provided with a shielded window for viewing cave operations. Above the shielded window are two encast liners and shield plugs for future MSM's, or other equipment installation if needed.

Pour caves are provided with a CCTV camera mounted thru-wall for remote viewing of operations. This is in addition to the local CCTV camera at the glass pour seal head location. Cave lighting will also be mounted thru-wall.

4. Operation

To describe system operation the following provides the sequence of events occurring to a single product container as it is processed through this system. During plant operations 3 containers on the turntable will be going through the processes concurrently at the import/export, glass fill, and cooling/venting stations.

Empty containers are brought into the pour cave and placed onto the turntable by system 313 Product Container Pour Cave Transfer System. The container is located into the turntable lower overpack component. The container lid is removed by System 313 equipment. A container lid detector, consisting of overhead sensors mounted on the monorail, verify the container lid is removed. The turntable lock is then retracted and the turntable rotated 120 degrees to position the empty container at the fill station. The turntable lock is engaged to achieve and verify final position of the turntable.

The container elevator raises the empty container and lower overpack housing from the turntable up to the glass pour seal head for container filling. At the upper position a elevator lock bolt is engaged to ensure elevator position during the container fill cycles. Interface between the container and the seal head are visually confirmed using CCTV mounted in the seal head containment housing. Product containers are maintained in the raised position until the melter is ready to discharge glass. A weight indicating device

on the elevator determines that a container is present and that it is not full of glass. A weight indication within the acceptable range is a requirement to discharge glass.

It is planned that glass pouring will be done in 3 batches to fill the container. A CCTV camera mounted in the glass pour seal head is used to visually monitor the glass pour stream during container filling. Because the container opening is sealed to the melter discharge, its inner space is ventilated to the melter offgas system during filling.

Container fill level is monitored by a thermal imaging camera which provides a complete view of the container diameter and nearly complete container length. The bottom portion of the container situated in the lower overpack is not viewed by the thermal camera. The thermal imaging camera will provide indication of the container fill level, the rate of filling, and a high level alarm. Gamma detectors are also used to control the container fill level. At the container high fill level a gamma detector activates an alarm. If the fill level reaches a high-high level then a second gamma detector initiates an automatic shutdown of the melter discharge. In summary, the fill level is monitored by a thermal imaging camera, a high level alarm is activated by the thermal imaging camera and a gamma detector, and a high-high level shutdown is initiated by a gamma detector.

Following the final glass pour batch, the container remains in position for one hour to provide initial container cooling and containment of final glass discharges. The elevator lock is then retracted and the container lowered to the turntable.

With the elevator in the lowered position, the turntable lock is retracted and the turntable rotated 120 degrees. This places the recently filled container at the cooling/venting station. The turntable lock is engaged and a cooling ventilation shroud is lowered to seal with the container opening. The ventilation shroud removes glass vapors directly to the C5 ventilation system during the cooling cycle. Container cooling continues while another container undergoes the fill cycle.

The ventilation shroud is then raised and the elevator lock retracted. The turntable rotates 120 degrees to place the cooled container at the import/export station. When available, System 313 places the container lid and removes it from the turntable. An empty container is then replaced onto the turntable and its lid removed by System 313. The container filling process is then repeated for the empty container.

5. Safety and Interlock Requirements

The following safety and interlock requiremtns are based on preliminary control strategies and requirements.

5.1. Pour Cave Container Turntable

The following conditions must be met for turntable rotation to occur:

- Lid presence detector must indicate the empty container lid is removed
- The container elevator must be in the lowered position
- The turntable lock must be in the retracted position
- Container ventilation shroud must be in the retracted position
- Pour cave shield door must be in the closed position

5.2. Pour Cave Container Elevator

- Turntable lock must be engaged to raise the elevator
- Elevator lock must be disengaged to raise or lower the elevator

5.3. Glass Pouring

The following conditions must be met for glass pouring to occur:

- Elevator weight must indicate a container is present
- Elevator weight must not indicate the present container is full
- Elevator must be in the raised position with lock engaged
- Gamma level detector must not indicate the present container is full
- The glass pour seal head isolation valve must be in the open position

5.4. Container Ventilation Shroud

- Turntable lock must be engaged to lower the ventilation shroud

5.5. Shielded Personnel Access Door

The following conditions must be met to access the glass pour cave:

- Pour cave gamma monitor must indicate below established values
- The glass pour seal head isolation valve must be in the closed position
- Pour cave shield door must be in the closed position

LV Systems 231, 232, 233, and 234: LAW Melter Offgas Treatment

1. Introduction and Scope

Melter offgas is generated from the vitrification of Low Active Waste (LAW) in up to three Joule-heated ceramic melters. The rate of generation of gases in the melter is dynamic and not steady state. The melters generate offgas that consists of:

- Gases resulting from decomposition, oxidation and vaporization of feed material:
  - Nitrogen oxides (NO_x) from decomposition of metal nitrates in the melter feed
  - Chloride, fluoride, and sulfur as oxides, acid gases and salts
  - Cesium, strontium, technetium and TRU as the major radionuclides
- Air in-leakage to the melter caused by operating the melter under vacuum. Rate of in-leakage depends on the melter condition and the vacuum applied
- Air from the operation of the bubblers and other equipment
- Entrained particulates

In addition, the LAW Melters generate small quantities of other volatile compounds including iodine-129, carbon-14 (^{14}C), tritium (^{3}H), and volatile organic compounds (VOCs). ^{14}C and ^{3}H are in the form of CO_2 and water respectively. Figure 1 shows a diagram of the principle of offgas generation in the melter.

The purpose of the LAW offgas system is to cool and treat the melter offgas and vessel ventilation offgas to the point where it will meet environmental release criteria for radioactive and chemical material. The offgas system must also provide a pressure confinement boundary that will control melter pressure and prevent vapor release to the cell. In other words, the design of the melter offgas system must accommodate changes in offgas flow from individual melters without causing the melter to pressurize and without allowing variations in the flow from one melter to impact other melters. Preventing melter pressurization avoids:

- Increase in contamination levels
- Exceeding release limits via the C5 areas exhaust
- Causing structural damage to the melter and associated components

Separate systems are provided for the initial decontamination of offgas from each melter. This is considered the primary offgas treatment system. This primary offgas system is designed to handle intermittent surges of seven times (7X) steam flow and three times (3X) non-condensable flow from feed. The primary system consists of a Film Cooler, Submerged Bed Scrubber (SBS) and a Wet Electrostatic Precipitator (WESP). This system cools the offgas and removes particulates.

Because pressurizing the melter with respect to the C5 areas exhaust is undesirable, the general approach is to size the offgas system line from the melter to the SBS such that the largest credible surge of condensable material (7X) can be accommodated by the increased pressure differential due to the consequent reduction in melter vacuum. Condensable surges are quenched in the SBS and do not significantly affect downstream operations. Non-condensable surges are accommodated by reducing the melter pressure control air and by the decline in in-leakage that occurs with reduced melter vacuum.

With this design approach non-condensable flow should be reasonably constant beyond the pressure control air injection point and total flow downstream of each SBS should be equally constant. If there were a reduction in vacuum to other melters from the impact of a surge, their non-condensable offgas rate would be reasonably constant due to reduction in in-leakage and pressure control air.

From the Melter Offgas System Failure Mode Analysis performed for the LAW and HLW Systems, it was concluded that the following situations could lead to melter pressurization:

- Plugging of the offgas line from the melter to the SBS
- General electrical failure (expected to happen no more than once every ten years)
- Surge in excess of the design basis (7X for steam and 3X for non-condensable gases)

The situation expected to cause melter pressurization more frequently is the plugging of the offgas line from the melter to the SBS due to the high possibility of solids deposition in this line.

After careful evaluation of alternate routes to maintain melter offgas system function during off normal conditions it was concluded that an extra line from the melter to the SBS is the most viable route. This extra line comprises of a film cooler and a butterfly valve as the isolation device. As soon as the melter vacuum decreases to a set point, the butterfly valve is actuated and offgas flow is allowed through the line thereby preventing melter pressurization.

The fans are provided with emergency power from diesel generators so that any electrical outage is not expected to exceed 15 to 30 seconds. In the event that the melter surge is much higher than the system is designed to handle, a pressure relief valve acts as the pressure relief point venting the offgas to the wet process cell.

After the WESP, all the dedicated offgas lines join plus the vessel ventilation header and are routed to the secondary offgas treatment system. The Vessel Ventilation header receives offgas from the LAW Melter Feed System Vessels, Plant Wash and Condensate Vessels, and the C3/C5 Effluent Vessels. The offgas received through the vessel ventilation system consists primarily of air, water vapor, and minor amounts of aerosols generated by the agitation or movement of vessel contents.

The secondary offgas system (from HEPA preheater to final discharge) is designed to handle maximum sustained flowrate from the three melters assuming all three melters are operating. The system is also capable of operating effectively if only one melter is running. The secondary offgas system consists of HEPA filters with preheater, exhauster fans, a catalytic oxidizer/reducer unit which houses the heat recovery unit (plate heat exchanger), electric preheater, the catalyst for VOC oxidation and the catalyst for NO_x reduction, and a caustic scrubber. This area reduces the remaining chemical contaminants allowing compliant offgas discharge from the stack.

This document reflects the current status of the LAW Melter Offgas System. The process flow diagrams (PFDs) are referenced in PFD (a) through (d). Some of the figures presented in this document are not fully representative of the actual plant items. They are shown to depict the basic concept of the unit.

The purpose of this document is to provide the following information about the LAW Melter Offgas System:

- Process description
- Safety and non-safety functions
- Normal operational process control system sequences

- Interlocks necessary to maintain safety and operations

2. Applicable Documents

Process Flow Diagram

- PFD (a), *LAW Vitrification, Melter 1 and Offgas Quenching*, DWG-W375LV-PR01002, BNFL Inc., Richland, Washington.

- PFD (b), *LAW Vitrification, Melter 2 and Offgas Quenching*, DWG-W375LV-PR01003, BNFL Inc., Richland, Washington.

- PFD (c), *LAW Vitrification, Melter 3 and Offgas Quenching*, DWG-W375LV-PR01004, BNFL Inc., Richland, Washington.

- PFD (d), *LAW Vitrification Primary and Secondary Offgas Treatment*, DWG-375LV-PR01005, BNFL Inc., Richland, Washington.

3. Process Description

The LAW melter offgas system consists of the following equipment and unit operations:

Primary Offgas System (typical for each melter)

- Steam/Air Injection Film Cooler
- Submerged Bed Scrubber (SBS) which includes:
  - SBS Column Vessel and associated pump
  - SBS Condensate Vessel and associated pumps
- Wet Electrostatic Precipitator

Secondary Offgas System (for combined flows and vessel vents)

- HEPA filters with heaters
- Exhauster fans
- Catalytic Oxidizer/Reduction Unit which houses:
  - Heat recovery unit (plate heat exchanger)
  - Electric preheater
  - VOC destruction catalyst
  - NO_x reduction catalysts
- Caustic Scrubber with collection vessel and recirculation pumps

Vessel Ventilation System

Standby Offgas Line

- Steam/Air Injection Film Cooler
- Butterfly Valve
- Pressure Relief Valve

The principal gas generated by the melter is steam. Decomposition of salts and organic material also yields CO_2, SO_2, NO_x, HCl, and HF. It is assumed that the NO_x is initially split equimolar between NO and NO_2.

The aerosols in the melter exhaust have a significant fraction larger than 23μm and another large fraction less than 1.6μm. The large aerosols are largely attributable to feed entrainment and the smaller fraction is from condensation of semi-volatile material.

The quantity of air in the melter offgas depends on the in-leakage, sparge air, melter pressure control air, and film cooler injection air/steam volumes. The in-leakage quantity is not readily quantified because it depends on how melter nozzles are installed and how the in-leakage points on the melter change with temperature and time during operation.

Figure 2 shows a block diagram of the LAW Melter Offgas Treatment System.

3.1 Primary LAW Melter Offgas System

The purpose of the primary offgas treatment system is to cool the offgas and remove aerosols generated by the melter. Since offgas radionuclides are concentrated within these aerosols, their removal allows worker access to the secondary offgas treatment system downstream of the HEPA filters for maintenance. Worker access will be allowed in the primary offgas area but it will be more strictly controlled since it is considered a C5 area. The LAW Vitrification Offgas Extractor Fans (K22001A/B/C) provide the motive force to draw the offgas through the primary offgas treatment system.

Each melter has a dedicated offgas treatment line up to and including the WESP. To distinguish between equipment items for these dedicated lines a specific numbering system was established.

3.1.1 Steam/Air Film Cooler

The offgas exits the melter at around 400°C (752°F) and is mixed with steam or steam/air mixture in the Offgas Film Cooler (E22101/201/301 and E22102/202/302 for the standby line). Each melter has a film cooler. The primary function of the film cooler is to cool the offgas below the glass sticking temperature to minimize solids deposition on the offgas piping walls. The film cooler is a double-walled pipe designed to introduce air/steam axially along the walls of the offgas pipe through a series of holes or slots in the inner wall. Figure 3 shows a diagram of the film cooler.

Process air (beyond what is needed to cool and accelerate the melter offgas) is introduced down stream of the film cooler to facilitate melter plenum pressure control. The flowrate of this air is controlled via a pressure control valve so that a steady melter pressure is maintained, even as the melter offgas generation rate fluctuates. If the offgas generation rate surges beyond the ability of the melter pressure control system to control so that the melter vacuum decreases to a set point, the butterfly valve in the standby line opens, and permits flow in the standby line.

3.1.2 Offgas Line from the Melter to the SBS

A 10" sloped line connects the film cooler to the SBS. This line is designed to handle surges up to seven times (7X) steam and three times (3X) non-condensables without causing melter pressurization. This line rises horizontally above the melter and then starts sloping downwards towards the SBS.

This offgas line is the major potential failure point in the offgas system due to solids deposition. To prevent pressurization of the melter and to provide more flexibility to the main offgas system, a standby line is provided that is nearly identical except for the addition of a butterfly valve as the isolation device. When the melter vacuum decreases to a specified set point, the butterfly valve is immediately actuated by melter pressure control allowing offgas flow through the line. The offgas is routed to the SBS and is subjected to normal offgas treatment. Depending on what triggered the standby line will determine response to the situation.

Once the melter vacuum is re-established at the control point and the cause is addressed, the line is isolated by closing the butterfly valve. To maintain the line clean and prevent plugging, a small back flow of air is allowed through the line. Means of line cleaning in case of plugging are identical to the ones mentioned for the main offgas line. Size of the valve and the line will depend on the design criteria for this line. In the event that the melter surge is above what the offgas system was design to handle, a pressure relief valve opens allowing melter venting to the process cell, which is classified as a R3/C5 area. Times when this pressure relief valve could be activated is during normal operations when personnel access is not allowed to the cell. Therefore there is no concern of worker exposure by the activation of this valve. Once the melter pressure is back to the desired set point, the valve closes.

3.1.3 Submerged Bed Scrubber (SBS)

After the film cooler the offgas enters the Submerged Bed Scrubber (SBS) Column (C22101/201/301) which is enclosed in the SBS Column Vessel (V22102/202/302) for further cooling and solids removal. Figure 4 shows a diagram of the Submerged Bed Scrubber. This diagram is not a full representation of the LAW Offgas SBS. The main purpose of the diagram is to present the basic functional principles of the SBS. Each melter has a dedicated SBS. The SBS is a semi-passive device designed for aqueous scrubbing of entrained radioactive particulate from melter offgas, cooling and condensation of melter vapor emissions, and interim storage of condensed fluids.

The SBS has two offgas inlets, one for the normal operations line and one for the standby line. The offgas enters the SBS through the appropriate inlet pipe that runs down through the center of the bed to the packing support plate. The bed retaining walls extend below the support plate creating a lower skirt to prevent gas bypassing the packing. A hold-down screen is used to prevent the bed from being carried out at high gas velocities. Once the gas bubbles are formed, they rise through the packed bed. The rising bubbles cause the liquid to circulate up through the packing, and hence downward in the annular space outside the packed bed. The packing breaks larger bubbles into smaller ones to increase the gas to water contacting surface, thereby increasing the particulate removal and heat transfer efficiencies. The liquid circulation helps to prevent buildup of captured material in the bed by constantly washing the material away. A cooling jacket located on the outside of the scrubber vessel and cooling coils located inside the vessel maintain the scrubbing liquid down to 122°F(50°C). Recirculation of cooler condensate from the SBS Condensate Vessel also contributes to the SBS Column Vessel condensate cooling. Cooling medium in both vessels is chilled water. As the offgas cools, water vapor condenses and increases the liquid water inventory. The liquid water overflows into the SBS Condensate Vessel (V22101/201/301) located next to the SBS Column Vessel, thereby maintaining a constant liquid depth in the scrubber section. Venting of this vessel is via the SBS Column Vessel into the main offgas discharge pipe.

The scrubbed offgas discharges through the top of the SBS and is routed to the Wet Electrostatic Precipitator (WESP) for further particulate removal. Solids captured in the SBS are deposited at the bottom of the SBS Column Vessel. To help maintain these solids in suspension, a recirculation pump located in the SBS Condensate Vessel recirculates the condensate to the SBS Column Vessel. This pump has a dipped leg discharge into the SBS Column Vessel that agitates the bottom of the vessel. Besides keeping the solids in suspension, this pump also helps in the cooling of the SBS condensate.

Condensate produced and solids captured in the SBS Column Vessel are purged periodically. The Scrubber Water Purge Pump (P22103/203/303) in the SBS Column Vessel transfers the condensate to the SBS Condensate Collection Vessel V25003. Because a constant liquid level is necessary in the SBS Offgas Column for proper performance, liquid from the SBS Offgas Condensate Vessel is recycled back to the SBS Column Vessel. The purging and recycling process occurs simultaneously. The constant liquid in the SBS Column Vessel is maintained by the recirculation pump located in the SBS Condensate Vessel (P22101/201/301). A spare pump is located in the SBS Condensate Vessel.

Both the SBS Column and SBS Condensate vessels contain spray wash rings, which are used during startup to fill the vessels and for washing during maintenance. If maintenance of the offgas line is required during the lifetime of the melter, a bypass line from the standby offgas line to downstream of the West Electrostatic Precipitator is provided to isolate the area and allow melter venting during maintenance. The bypass line is only opened when the melter is in idled mode.

3.1.4 Wet Electrostatic Precipitator (WESP)

After removing larger particulates and aerosols in the SBS, the cooled offgas is routed to the Offgas Wet Electrostatic Precipitator (G22101/201/301) for high efficiency removal of sub-micron particulates and aerosols. Figure 5 shows a diagram of a WESP. Each melter system has a dedicated WESP. The WESP is located in the same process cell as the SBS at elevation 3'-0".

The offgas enters at the top site of the unit and passes through a distribution plate. The evenly distributed saturated gas then flows downward through the tubes of the WESP.

The tubes act as positive electrodes. Each of the tubes also has a single negatively charged electrode, which runs down the center of the tube. A high voltage transformer/rectifier supplies the power to these electrodes. A strong electric field is generated along the electrode giving a negative charge to particles as they pass through the tubes. The negatively charged particles move towards the positively charged tube walls and are intercepted as the offgas moves through the tube. Collected particles are then washed from the tube wall along with collected mists. As the gas passes through the tubes, the first particles captured are the water droplets. As the water droplets gravity drain through the electrode tubes the collected particles are washed off and the final condensate is collected in the WESP dished bottom area. The collected condensate then gravity drains into the C3/C5 Effluent Vessel V25026. Each WESP is equipped with a spray wash ring for periodic washdown and maintenance, when required.

The WESP transformer/rectifier is located outside of the process cell at the level above. This allows for hands-on maintenance to the transformer if required. In the current design process air is added through the electrode ducting to maintain the electrode dry.

3.2 Secondary Offgas Treatment System

The combined primary melter offgas streams and the vessel ventilation offgas stream are combined for treatment through the LAW secondary offgas treatment system. This system removes almost all

remaining particulate, miscellaneous acid gases, gaseous species of NO_x, and volatile organic compounds (VOCs).

3.2.1 HEPA Preheaters, Filters and Exhauster

The offgas is subjected to further particulate removal with HEPA filters.

The combined offgas stream is passed through the LAW Melters Offgas HEPA Preheater (E22001A/B). Figure 6 shows a diagram of the heater. This electric heater increases the gas temperature above its dew point to avoid condensation in the Melter Offgas HEPA Filters (G22001A/F, G22002A/F, G22003A/F, and G22004A/F). Two electric heaters in series, in a common housing, are provided for redundancy. One is operational while the other one is on standby mode. In case of failure of one element the second one would be brought on-line.

The offgas then passes through circular HEPA filters. To obtain 99.999% removal efficiency two sets of filters are located in series. Figure 7 shows a diagram of the HEPA filters. There are two parallel sets of HEPA filter trains. The offgas passes through one train while the other remains available as an installed backup. When the differential pressure across the filters or the radiation level becomes too high, they are changed out. Filter banks are contact maintained and the filters are changed one at a time. The purpose of these HEPA filters is to provide a final protection against dispersion of radioactive particulate. This helps protect the downstream equipment from radioactive contamination.

3.2.2 Catalytic Oxidizer/Reducer Unit

The offgas at this point has a high level of gaseous nitrogen oxides (NO_x), since the melter decomposes the parent nitrate/nitrite compounds. Significant nitrate/nitrite destruction/removal occurs by sugar addition during feed makeup, in the melter, and also by scrubbing in the SBS. However, further removal is required to meet BACT for NO_x. Volatile organic compounds (VOC) are also present in the offgas stream and require removal.

To meet these requirements, the offgas is passed through a catalytic oxidizer/reducer unit. This skid mounted unit houses the LAW Melters Offgas Catalytic Oxidizer Heat Recovery Unit (E22002), the LAW Melters Offgas Catalytic Oxidizer Electric Heater (E22003), the LAW Melters Offgas Catalytic Oxidizer VOC catalyst (C22006) and the LAW Melters Offgas Catalytic Oxidizer SCR Catalysts 1 and 2 (C22004, C22005). Figure 8 shows a diagram of this unit.

As the gas enters the unit, it passes through the heat recovery unit (E22002), which is a plate heat exchanger. Temperature coming out through the cold side of the heat exchanger is above 572°F. The heating medium used is the exhaust from the catalytic oxidizer/reducer unit. The offgas used as heating enters the hot side of the heat recovery unit at around 959°F. The offgas then passes through an electric heater to bring the temperature up to that desired for the VOC catalyst to operate. The heater is mainly used during startup and low NO_x concentration. During times of low NO_x concentrations the catalyst columns will not produce enough heat to be used as heating for the incoming offgas.

The VOC catalyst column (C22006) operates at a lower temperature (~662°F) than the NO_x catalyst (~752°F) therefore it is placed at the beginning of the unit. This arrangement also prevents the formation of NO_x through the VOC catalyst from the combustion of ammonia, which is added after the gas goes through the VOC catalyst. The VOC catalyst is a platinum-based material deposited on a metal monolith, which is held in frames and inserted and removed through access doors. The VOC destruction reaction is exothermic and provides heat increasing the offgas temperature to that required for the NO_x catalyst.

Through this catalyst the organics are decomposed to carbon dioxide, water vapor and possibly acid gases (depending on the halogenated VOC present in the stream).

After the VOC catalyst, the offgas enters a chamber where a gas mixture of ammonia, CO_2 and water vapor, is injected through an atomized spray and allowed to mix with the offgas. Ammonia is added so that it can react with the NO_x and reduce it to nitrogen and water vapor.

The offgas then goes through the first set of NO_x catalyst modules. Two sets of NO_x catalyst columns are required (C22004, C22005). After the offgas passes through the first set, more ammonia gas mixture is injected and allowed to mix and then sent through the second set to achieve a >98% destruction. The NO_x catalyst is a titanium oxide based material deposited on a metal monolith, which is held in frames and inserted and removed through access doors.

The treated offgas stream is then sent to the caustic scrubber for iodine and ^{14}C removal and for final cooling of the offgas stream.

3.2.3 Caustic Scrubber

The LAW Melters Offgas Caustic Scrubber (C22007) further treats the offgas by removing molecular iodine and ^{14}C and providing final offgas cooling. Figure 9 shows a diagram of the caustic scrubber. The contaminated offgas stream enters the bottom site of the scrubber and flows upward through a packed bed. The offgas flows countercurrent to the scrubbing liquid, which is introduced through a distributor at the top of the packed section of the column and trickles downward through the packing media. Contaminates, in the offgas stream, are absorbed into the liquid stream through interaction of the gas, liquid and packing media. To neutralize the collected acid gases, a sodium hydroxide solution is added periodically to the Caustic Collection Vessel (V22001). The clean offgas is then discharged through a mist eliminator to prevent droplet carryover. The scrubbing liquid flows downward through the packing bed and falls into the Caustic Collection Vessel (V22001). This liquid is recirculated to the top of the column using the Caustic Scrubber Recirculation Pumps (P22101A/B).

The principal purpose of the scrubber is the removal of iodine and final cooling of the offgas. Some of the process-generated carbon dioxide is also removed in this scrubber. Carbon dioxide is neutralized to sodium bicarbonate. Iodine is removed in this column if it is present either in the form of HI or I_2. Any organic iodine that passes through the catalytic oxidation unit will decompose to molecular iodine, which is easily removed in this column.

After the caustic scrubber, the offgas is released to the environment via the facility stack.

If the caustic scrubber needs to be placed in standby mode, a bypass line is provided to allow continuous operation of the main offgas system.

3.3 Vessel Ventilation System

The Vessel Ventilation System collects the vessel vents from the Feed Preparation, Plant Wash and Condensate Vessels. This header joins the main offgas line immediately before the HEPA preheater E22001A/B.

The composition of the vessel ventilation air is assumed to be primarily air with slight radioactive particulate contamination. No significant acid gas contamination is expected for this stream.

4. Functions

This section outlines the safety and non-safety functions for the LAW Melter Offgas System.

There are no important-to-safety functions identified for the LAW Melter Offgas System at this time.

Some safety related functions have been preliminary defined in the integrated safety management (ISM) Cycle 1 process for structures, systems, and components (SSCs) for the LAW Melter Offgas System. These functions will not be completely defined until Cycle 2 of the ISM process. Safety related functions include:

1 LAW Melter Offgas System

- Prevent melter pressurization by accommodating surges of up to 7 times the normal steam and 3 times non-condensable flowrate. This prevents the release of radioactive contamination to the cell
- Protect the public, environment, and operating staff from radionuclides and chemical exposure
- Maintain the melter pressure boundary to avoid spreading radioactive material to the cell/cave and possibly operating areas
- Protect the structural integrity of the melter

2 Vessel Ventilation System

- Prevent dispersal of radionuclides and acid gases into the process cells and operating areas

<u>Non-safety Related Functions for SSCs include:</u>

1 Primary and Standby Line Film Cooler

- Cool the melter offgas to permit downstream equipment to function properly for contamination removal and prevent solids build-up within the offgas line between the melter and the SBS

2 Standby Line Butterfly Valve

- Provide isolation between the melter and the standby offgas line

3 Submerged Bed Scrubber (Column and Condensate Vessels)

- Further cool the melter offgas so that downstream equipment can function properly
- Remove entrained aerosols

4 Wet Electrostatic Precipitator

- Protect HEPA filters from rapid loading and frequent changeout

5 HEPA Preheater

- Preheat offgas to above dew point to prevent condensation in the HEPA filters

6 High Efficiency Particulate Air Filters

- Perform final radioactive particulate removal before discharging the combined melter and vessel ventilation offgas to the secondary offgas treatment system

7 Exhauster Fans

- Provide motive force in the system to allow the offgas to be treated through the offgas system and be released

8 Catalytic Oxidizer Unit

- Heat Recovery Plate Heat Exchanger
  - Recover heat from the catalytic oxidation/reduction unit so that the electrical load on the electric heater is lessened
- Electric Heater
  - Provide initial offgas heating during startup
  - Heat the offgas to the required operating temperature of the catalysts located in the unit if the heat provided by the heat recovery unit is not sufficient
- VOC Catalyst
  - Reduce the amount of volatile organic compounds from the offgas stream to permit safe release to the environment
- NO_x Catalyst
  - Reduce the amount of NO_x gases from the offgas stream to meet release limits to the environment

9 Caustic Scrubber

- Remove radioactive iodine from the offgas stream to meet environmental limits
- Provide final cooling of the offgas stream prior to release

10 Caustic Scrubber Collection Vessel

- Detect high radioactivity prior to discharge
- Provide representative sample or measurement
- Provide solids suspension for transfer
- Receive, store, recirculate and transfer effluent
- Provide caustic solution to scrubber

11 Pressure Relief Valve

- Provide pathway for melter pressure relief if a beyond design basis surge reaches the pressure limit that the melter was designed for. Valve is located in the standby offgas line.

12 Vessel Ventilation System

- Maintain pressure boundary (slight vacuum) in process vessels to prevent pressurization and control emissions.

5. Normal Operations

This section provides a description of the process control sequences employed for the overall LAW Offgas Treatment System and for individual treatment units. At a later stage, this section will include the input from the controls engineering and instrumentation department.

5.1 Pressure Control

Melter vacuum is maintained in several ways:

- Long term changes, such as increases in air in-leakage as the melter ages, are met by changing the exhauster speeds.

- Short-term changes such as variations brought about by the non-steady state regime in the melter are met by adjusting air/steam flow to the film cooler and the amount of melter pressure control air.

- When the melter vacuum decreases to a set point, the standby offgas line is activated to prevent melter pressurization.

- In case of a surge above that to which the melter offgas system and the standby line are designed for occurs, a pressure relief valve provides melter pressure relief.

- The line between the melter and the SBS is sized to accommodate the design basis condensable surge without causing the melter vacuum to decline to the point where there is a risk of pressurization. Condensable surges are quenched in the SBS and do not significantly affect downstream operations. Non-condensable surges are accommodated by reducing the melter pressure control air and by the decline in in-leakage that occurs with reduced melter vacuum.

- If a surge in the melter causes a reduction in vacuum to other melters, then non-condensable offgas rate would decline due to reduction in in-leakage and pressure control air.

5.2 In-bleeds

There are sixty fixed air in-bleeds and six steam or steam and air in-bleeds into the LAW Offgas System (this includes all three melters). They are:

- Eighteen fixed melter air in-bleeds into each melter, giving a total of fifty four air in-bleeds, to give bubbling mixing and ensure oxidation.

- Pressure control air inbleed at the film coolers for each melter (6 total, 3 normally inactive). By varying the flow of control air into the offgas stream, the pressure depression within the melter can be regulated. During an offgas surge the melter pressure rises causing the control valve to constrict and lower the amount of control air being added to the offgas stream, thereby keeping a constant pressure in the melter. Control air in the standby line is also used to allow a small back flow while the line is not operating to maintain the line clean and prevent plugging.

- Six film cooler steam or steam and air in-bleeds (3 normally inactive), to cool the gas streams and prevent molten glass particles solidifying and depositing on the walls of the ductwork. Air used to clean the mechanical reamers is included here.

6. Safety and Interlock Requirements

Preliminary control strategy elements for safety related functions have been defined. For the LAW Melter Offgas System include:

- Allow semi-remote removal of components with a potential for high contamination levels
- Process cell to provide secondary confinement of gases
- Include adequate shielding for the maximum credible activity
- Remove the majority of the radioactivity before the gas reaches the HEPA filters
- Use low-density electric heaters throughout the system
- Provide vessel venting to prevent vessel pressurization
- Select materials of constructions appropriate for operating parameters
- Monitor the final discharge offgas stream for NO_x, NH_3, VOCs and contamination
- Prevent formation of ammonium nitrate by heating offgas to the desired SCR reaction temperature range before injecting the ammonia gas mixture

For each system component, a preliminary indication of control and/or interlock features necessary to maintain adequate operations are described below. The impacts to safety of the conditions identified below have not been identified.

1 SBS Column and Condensate Vessels unit instrumentation, alarms, controls, and/or interlocks will be provided to indicate and/or prevent the following conditions:

- High scrubber liquor temperature
- Low scrubber liquid level
- High Condensate Vessel liquid level
- Loss of chilled water supply
- Extremely high-pressure differential across the unit the SBS Column Vessel
- High density

2 WESP unit instrumentation, alarms, controls, and/or interlocks will be provided to indicate and/or prevent the following conditions:

- Loss of electrical power to the unit
- High differential pressure across the unit
- Plugging of the drain line
- Loss of process water supply

3 HEPA unit instrumentation, alarms, controls, and/or interlocks will be provided to indicate and/or prevent the following conditions:

- High differential pressure across a HEPA signaling to switch to the redundant unit
- Loss of preheater element
- Low pressure differential
- High radiation in the outlet stream

4 Extractor Fan instrumentation, alarms, controls, and/or interlocks will be provided to indicate and/or prevent the following conditions:

- General failure of the fan signaling to switch to the redundant unit
- Low header vacuum

5 The Catalytic Oxidizer/Reducer unit instrumentation, alarms, controls, and/or interlocks will be provided to indicate and/or prevent the following conditions:

- High-pressure differential across each catalyst bed
- Loss of ammonia gas mixture supply to the NO_x SCR column
- Failure of the electric heater
- Ammonia analyzer to provide amount of ammonia slip in the outlet. Over the limit will alarm indicating system malfunction
- Low offgas temperature entering the unit
- High temperature differential across the unit
- High NO_x concentration in the unit outlet stream
- High VOC concentration in the unit outlet stream

6 The Caustic Scrubber and collection vessel unit instrumentation, alarms, controls, and/or interlocks will be provided to indicate and/or prevent the following conditions:

- Loss of recirculation pump indicating to switch to redundant unit
- Loss of caustic supply
- Loss of process water supply
- High-pressure differential across the column
- Low scrubbing liquid level
- High scrubbing liquid level
- Prevent waste transfer to Pretreatment at high gamma radiation level
- Loss of transfer pump

1 **Figure 1. Melter Offgas Generation (Not Representative of Plant System)**

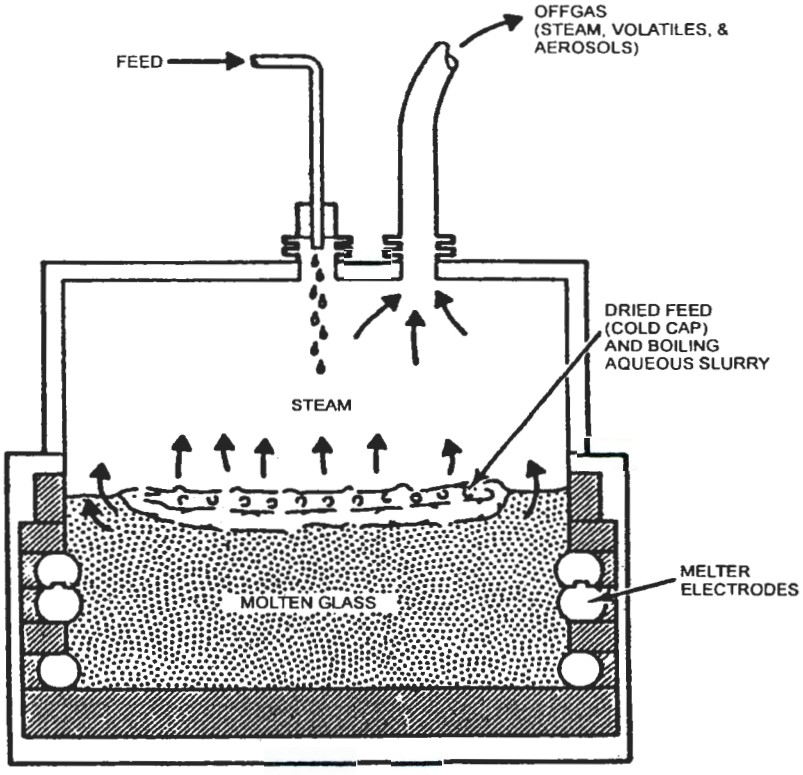

Figure 2. LAW Melter Offgas System Block Diagram

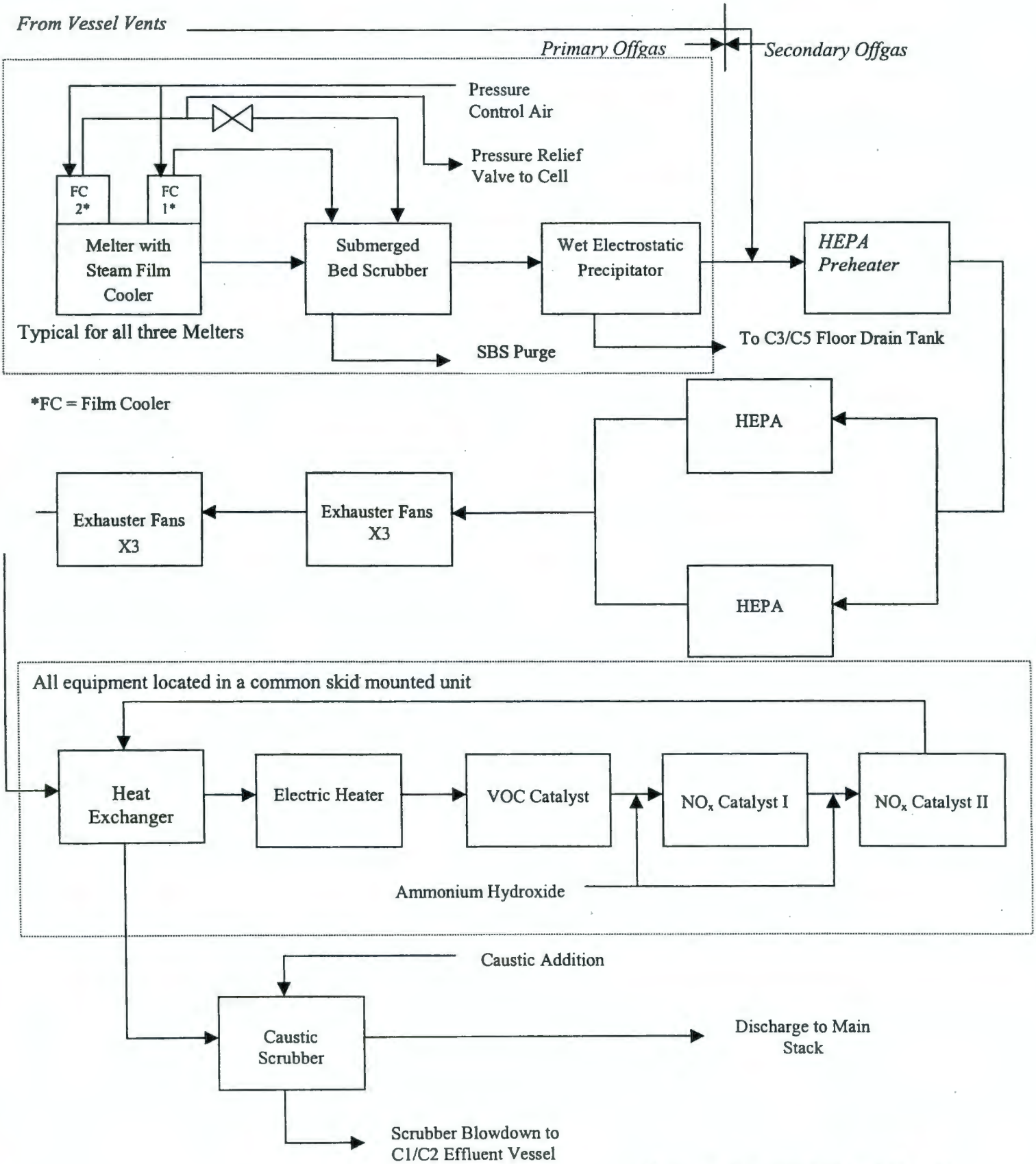

Figure 3. Melter Offgas Film Cooler

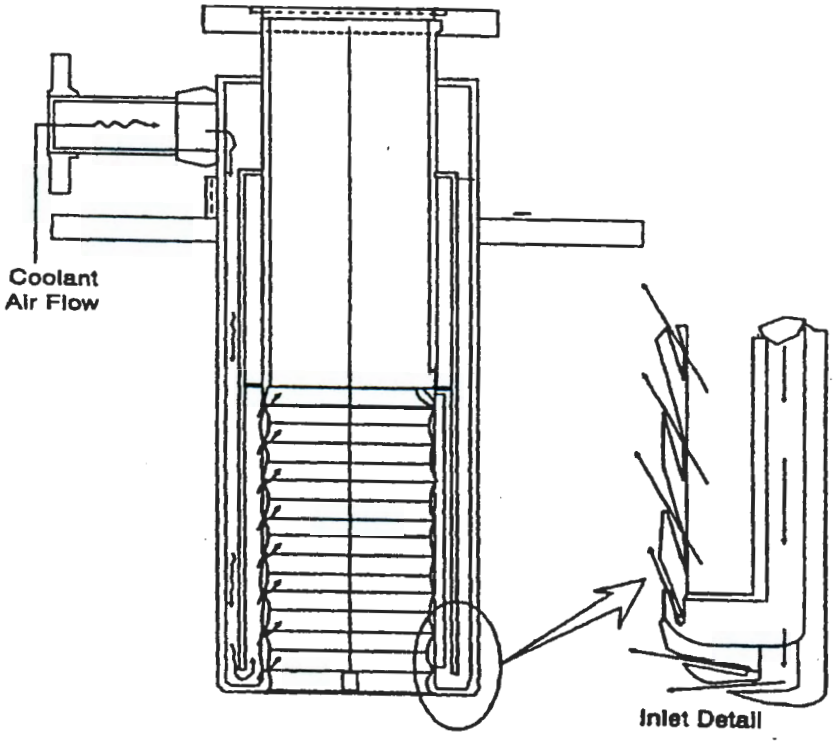

Figure 4. Submerged Bed Scrubber (Not Fully Representative of Plant System)

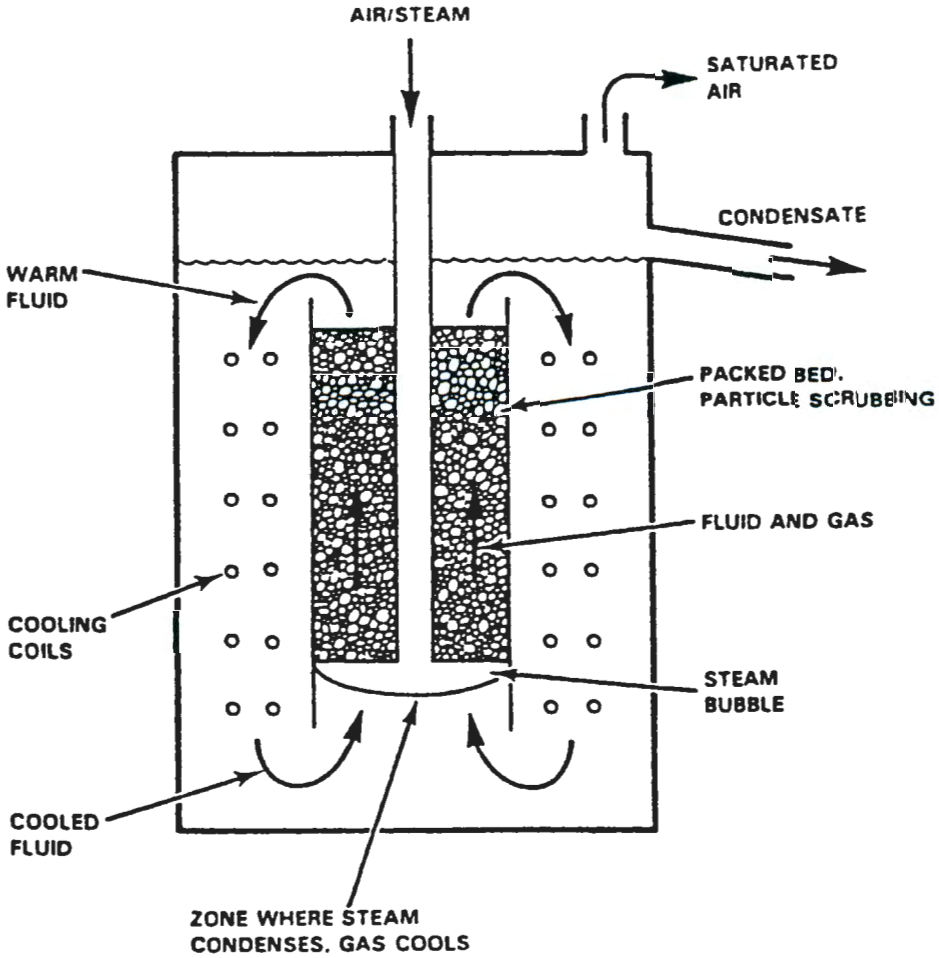

Figure 5. Wet Electrostatic Precipitator (Not Fully Representative of Plant System)

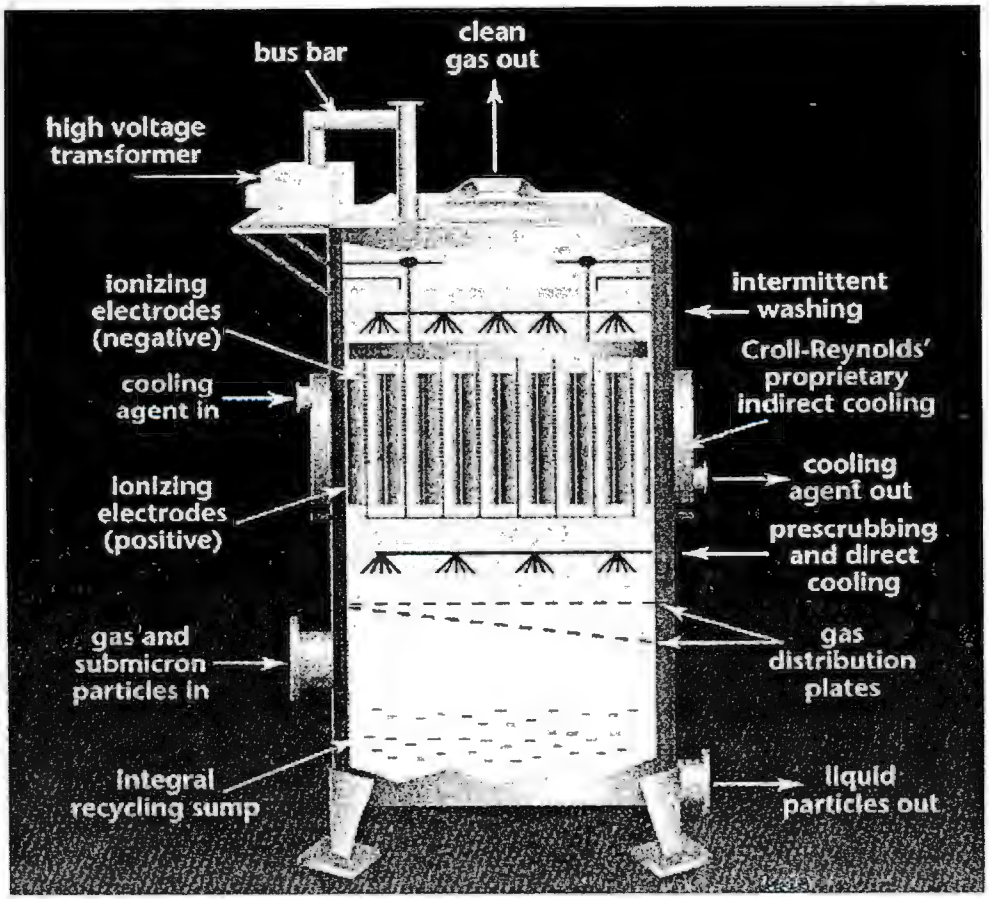

Figure 6. Electric Heater

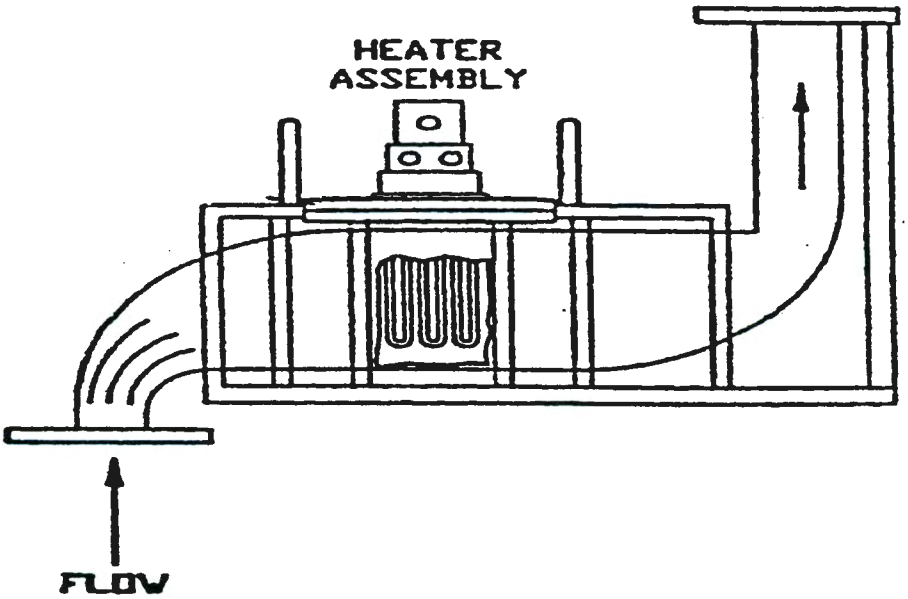

1 **Figure 7. HEPA Filters**

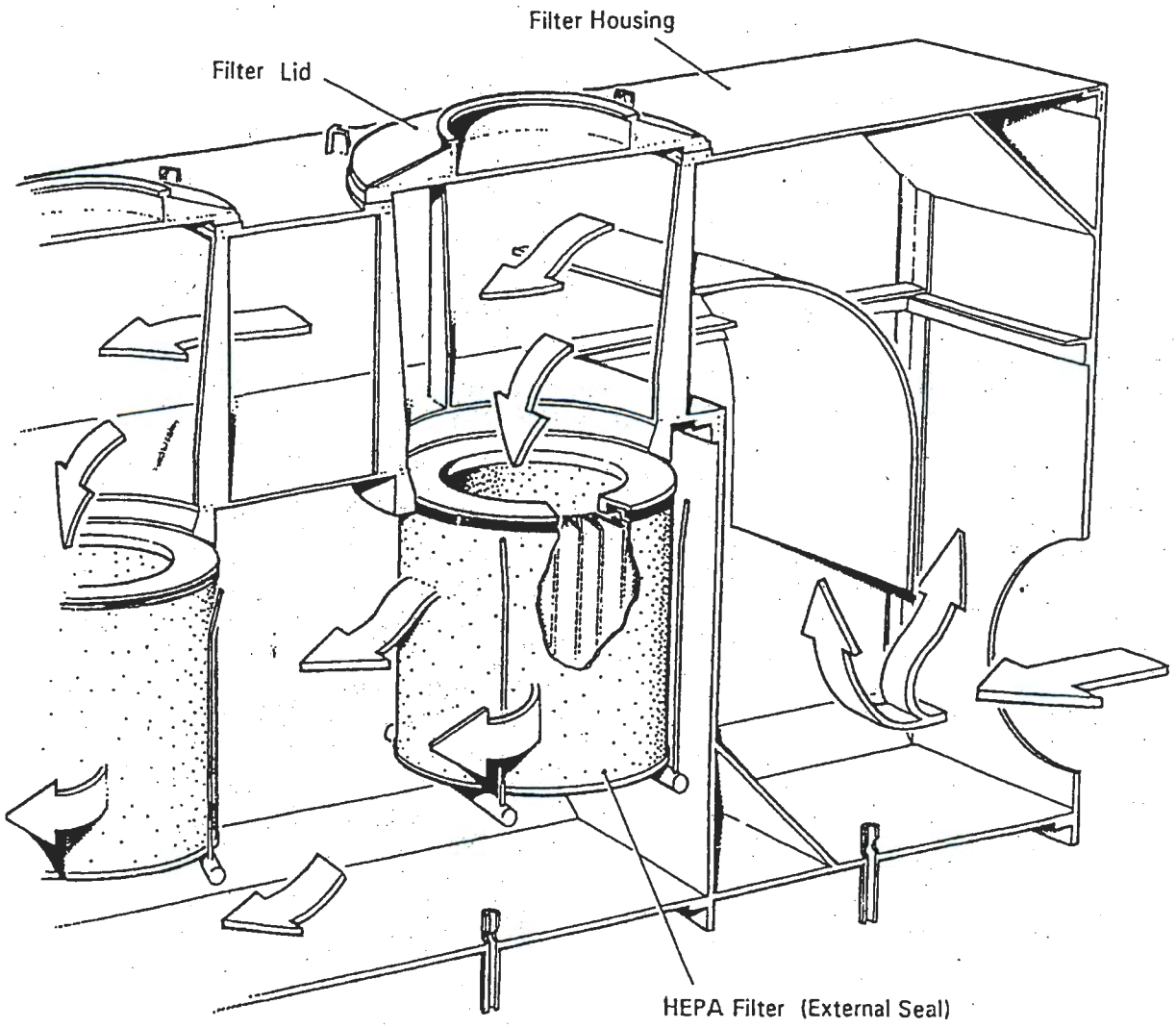

2

Figure 8. Catalytic Oxidizer/Reducer Unit

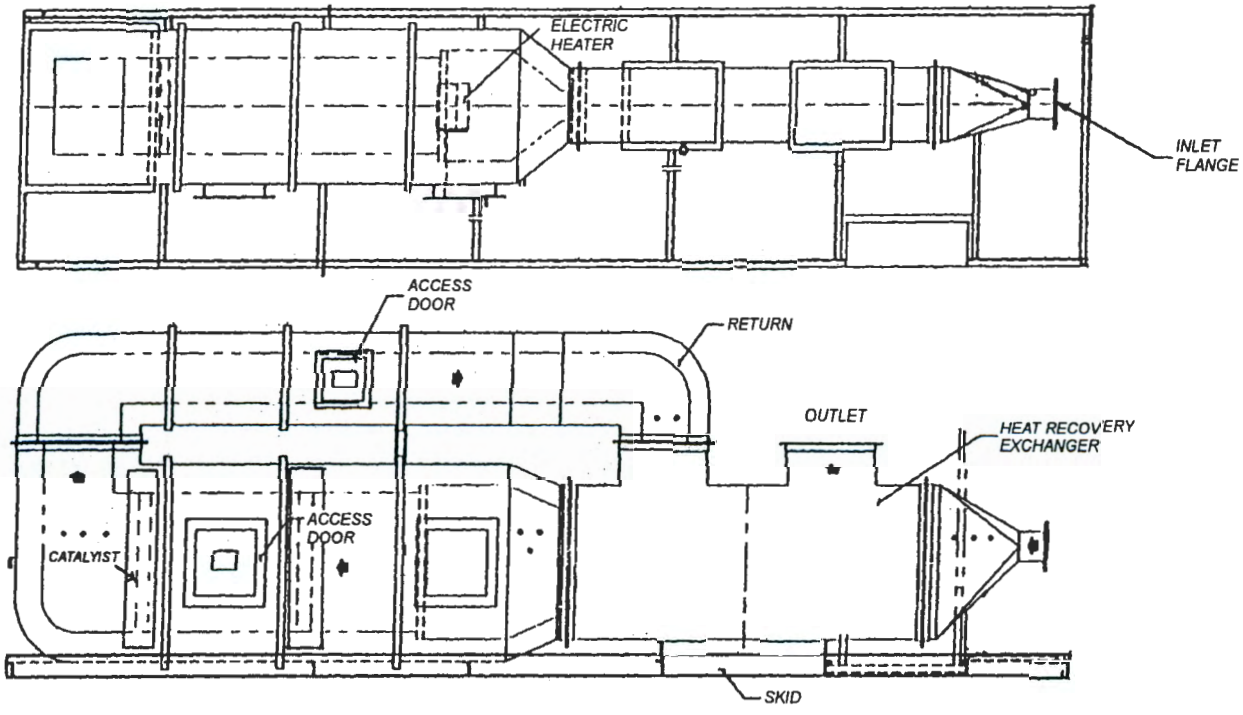

Figure 9. Caustic Scrubber

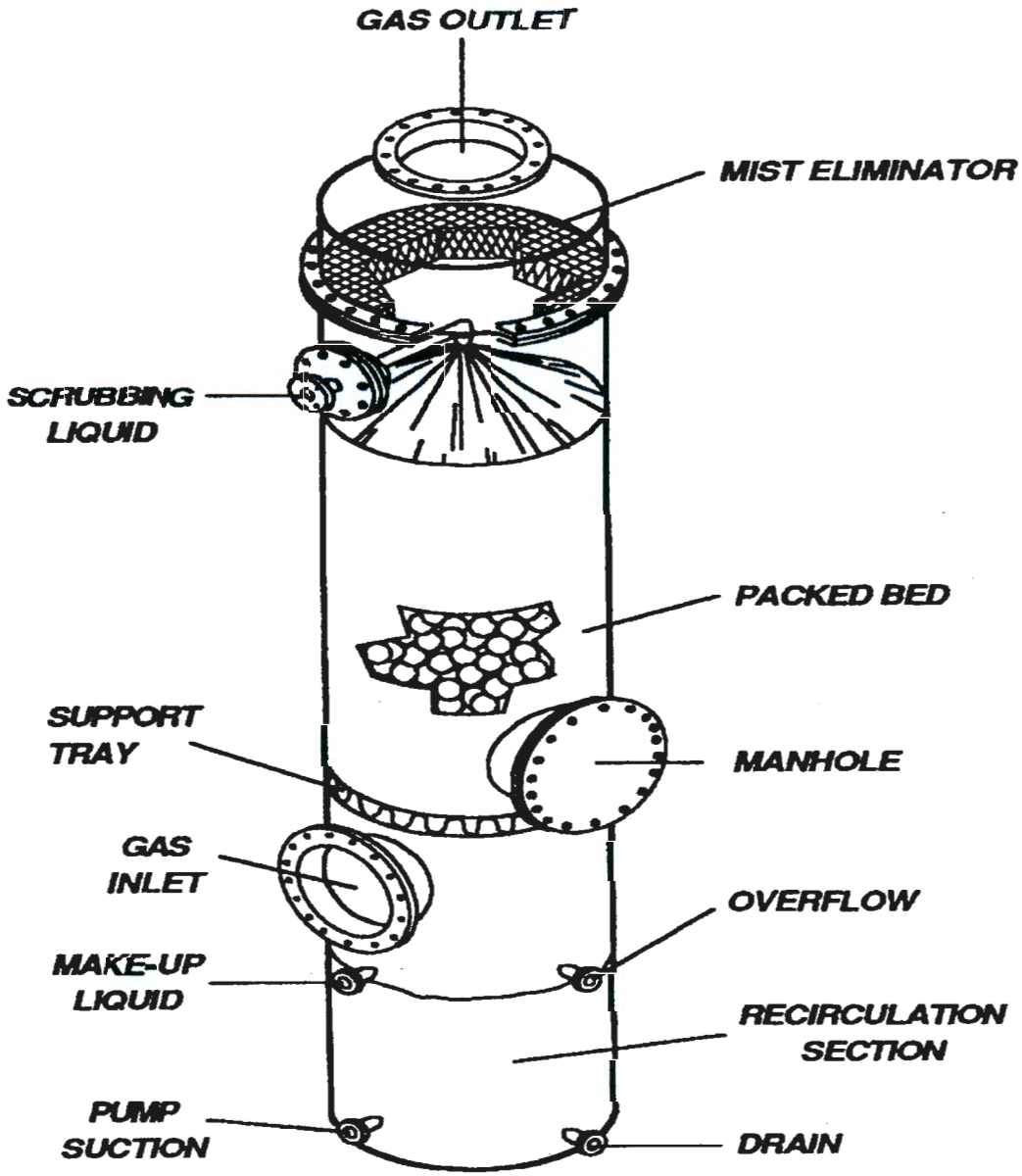

LV System 311/312: ILAW Container Receipt And Transfer Lines 1 and 2

1. Introduction

LV System 311, Product Container Receipt and Transfer Line 1, takes delivery of new LAW Product Containers, and provides a means to transfer those Containers to designated monorail cranes that service the three LAW melters. After filling, the Containers are transferred back to LV System 311 or to LV System 312 for movement to the Lidding Cave or Buffer Store. LV System 312 performs the same function, with the exception of new container delivery.

2. Description

2.1. System Equipment Location and Operation

2.1.1. Container Receipt

An overhead crane in the truck bay will be used to support the "Consumable Import/Export" activities and Container receiving requirements. Delivery trucks can be off-loaded with this crane if the truck does not have an on-board boom for placing Containers on the receiving dock.

Prior to Container transfer into the CONTAINER IMPORT bay, the shipping overwrap is removed and a cursory receiving inspection performed. The overwrap is disposed of in a commercial "baler". If shipping damage is found, the Container is set aside for return shipment and logged appropriately into the Plant tracking system.

After the initial receiving inspection, each Container is positioned on the receiving dock at the entrance to the CONTAINER IMPORT bay. The Container handling forklift is brought to the C1/C2 receiving dock boundary and transfers each Container to a temporary storage position inside the CONTAINER IMPORT bay. New Containers are then logged into the Plant tracking system.

2.1.2. Container Import

Empty Container transfer into the Plant for filling and subsequent processing starts with those Containers that have been temporarily stored in the CONTAINER IMPORT bay. From this area, Containers move into the TRANSFER TUNNEL.

Container Transfer into Airlock

Prior to actual Plant need for additional Containers, a final inspection and transfer takes place in the CONTAINER IMPORT bay. Each Container identified for import is moved to a Container inspection stand. This allows the Operator to assess the upper head/lifting flange area, including the "fill" opening, and to observe the Container inside with a light. At the conclusion of this inspection, the Operator makes sure the temporary lid is in place and properly fitted.

Other inspections on the rest of the Container are carried out as required, then the Container is placed on the import LINE 1 or LINE 2 STAGING CONVEYOR, and the Plant tracking log is updated. If the Container inspection fails, it is logged/tagged appropriately and set aside until it can be surveyed out of the area.

Each time a Container is placed on the STAGING CONVEYOR, the Operator initiates a conveyor transfer. The transfer serves to index all Containers on the STAGING CONVEYOR and/or AIRLOCK

CONVEYOR forward so there is always a Container in the "pickup" position on the AIRLOCK CONVEYOR.

Conveyor transfer control is achieved by having dedicated drives for independent live-roller conveyor sections corresponding to each Container position. Container-present sensors interface with a control system to prevent movement when the next position is occupied.

An additional piece of equipment is involved in the transfer when control system logic indicates space is available in the AIRLOCK. In this case the AIRLOCK DOOR is opened via air cylinder, the transfer takes place, then the AIRLOCK DOOR closes.

The steps summarized above can be repeated until up to ten Containers are staged and ready to be moved into a Plant pour cave. When processing needs dictate, the following steps are carried out to move a Container to the required pour cave.

Container Transfer to Pour Cave

When the Plant calls for another empty Container, the following sequence takes place:

- If not already present, a CONTAINER TRANSPORT BOGIE is moved below the AIRLOCK TRAP DOOR to receive the next Container
- AIRLOCK MONORAIL CRANE GRAPPLE lowers and attaches to Container, then raises to transfer height
- Crane moves over AIRLOCK TRAP DOOR
- AIRLOCK TRAP DOOR opens via air cylinder
- CCTV allows visual confirmation of TRAP DOOR "open" and BOGIE "present" in the TRANSFER TUNNEL below
- CRANE lowers Container to BOGIE and releases Container
- CRANE raises GRAPPLE to transfer height
- TRAP DOOR closes
- CRANE is positioned over the dedicated Container pickup location for repeat of sequence

After the above steps are complete, the TRANSPORT BOGIE (with Container) moves to a designated monorail crane (LV System 313) for Container pickup and transfer into the appropriate melter pour cave.

2.1.3. Full Container Transfer to Lidding Cave or Buffer Store

After filling, a given Container is brought out of the Pour Caves by one of the LV System 313 monorail cranes. A TRANSPORT BOGIE is positioned to receive the Container, which is then lowered onto the BOGIE. The BOGIE transfers the Container to the end of the TRANSFER TUNNEL, where it waits for either transfer into the Lidding Cave or Buffer Store, depending on Plant processing availability.

LV System 313: ILAW Container Pour Cave Transfer

1. Introduction

The function of the LV System 313, Immobilized Low-Activity Waste (ILAW) Pour Cave Transfer, is to provide "product" container transportation between the container transfer bogies and the pour carousels. The system transfers empty "product" containers from the container transfer bogies to the pour carousels, and full "product" containers from the pour carousels to the transfer bogies in a safe, efficient, and quality manner that supports the plant throughput goals.

2. Scope

The "product" container pour cave transfer system scope consists of the following activities:

- Empty "product" container transfer from the container transfer bogies to the pour carousels
- Full "product" container transfers from the pour carousels to the container transfer bogies
- Decontamination and maintenance of system equipment

3. Applicable Document

1) BNFL Inc., LAW Vitrification System 313, Mechanical Handling Diagram (Level I), Product Container Pour Cave Transfer, DWG-W375LV-M00113, BNFL Inc., Richland, Washington, USA.

4. Functions

- Radiological control between the pour cave and the bogie transfer tunnel during maintenance operations in either the bogie transfer tunnel or the pour caves

- Radiological control between the bogie transfer tunnel and the monorail maintenance facilities

- Hands-on maintenance operations in the monorail maintenance facilities

- Normal pour cave transfer operations

5. Requirements

Process operations will be automated with the number of stages requiring initiation by the operator minimized. The degree of automation will depend upon the plant area of concern and the process performed. Mechanical handling operations will utilize sequence control where possible, thereby minimizing the number of stages requiring operator initiation.

A process monitoring closed circuit television (CCTV) system is required for remote viewing of equipment and operations within cave areas where the radiation levels are too high for personnel access. The cameras will be located to give optimum viewing angles and distance to suit the process. The through roof/wall cameras and crane mounted cameras will be radiation tolerant, where required. Monitors and operators controls will be provided at the cave face where required. Control features (for

example, pan, tilt, focus, etc.) will be selectable at any location where an operator requires a variable view to assist in manual operations.

6. Description

LV System 313 (ILAW Container Pour Cave Transfer) is located 21 feet below grade. The system is responsible for transferring empty "product" containers from the "product" container transfer bogies to the pour carousels, and full product containers from the pour carousels back to the "product" container transfer bogies.

Monorail hoists are used to make the container transfers. LV Systems 311 and 312 transfer bogies are responsible for delivering containers to monorail load/unload positions serviced by the monorail hoists at LV System 313. The hoists operate on beams that run in a north-to-south direction.

Concrete walls separate the pour caves from the bogie transfer tunnel. These walls have passages large enough to allow the hoist units loaded with "product" containers to pass through them. The passages are fitted with upper and lower steel shield doors, three inches thick for radiological shielding during hands-on maintenance activities. The upper sets consists of two hinged shield doors actuated by pneumatic cylinders. The lower doors are single vertically mounted, horizontally traveling shield doors powered by a gear motor.

Concrete walls also separate the monorail maintenance facility from the bogie transfer tunnel. These walls have passages large enough to allow the hoist units, loaded with spare pour carousel parts, to pass through them. These passages are also fitted with steel shield doors, about three inches thick for radiological shielding from sources in the bogie transfer tunnel during hands-on maintenance activities in the monorail maintenance facility. Each passage is shielded with two hinged shield doors actuated by pneumatic cylinders.

All pour cave transfer operations are conducted remotely with only a few exceptions. Maintenance/ recovery operations in the bogie transfer tunnel such as a jammed grapple may require hands-on intervention. Monorail hoist maintenance operations conducted in the maintenance facility are completely hands-on. Monorail hoist recovery operations can become a hands-on/remote combination depending on the failure details.

7. Operations

7.1. Empty Container Transfer from Transfer Bogie to Pour Carousel

This operation begins with an LV System 311 or 312 container transfer bogie, loaded with an empty container, and parked in the required monorail load/unload position.

- The monorail hoist is positioned above the empty container on the transfer bogie.
- The grapple is lowered and attached to the container.
- The container is raised to transfer height.
- The container is transferred to the pour cave shield door interlock position outside the pour cave shield doors.

- The pour cave shield doors are opened.
- The container is transferred into the pour cave and positioned above the product container import/export position on the pour carousel.
- The container is lowered onto the pour carousel.
- The grapple is released and raised to transfer height.
- The monorail hoist is transferred to the pour cave shield door interlock position outside the pour cave shield doors.
- The pour cave shield doors are closed.

7.2. Full (ILAW) Container Transfer from Pour Carousel to Transfer Bogie

This operation begins with a full product container in the pour carousel ready to be exported and an unloaded LV System 311 or 312 product container transfer bogie parked in the required load/unload position.

- The monorail hoist is transferred to the pour cave shield door interlock position outside the pour cave shield doors.
- The pour cave shield doors are opened.
- The monorail hoist is transferred into the pour cave and positioned above the full container in the import/export position on the pour carousel.
- The grapple is lowered and attached to the full container.
- The full container is raised to transfer height.
- The full container is transferred to the pour cave shield door interlock position outside the pour cave shield doors.
- The pour cave shield doors are closed.
- The full container is positioned above the empty transfer bogie.
- The full container is lowered onto the empty transfer bogie.
- The grapple is released and raised to transfer height.

LV System 314: ILAW Container Buffer Storage

1. Introduction

The primary purpose of LV System 314 is to provide a buffer store for ILAW containers in the event the down stream processing lines become backed up. Additionally, any ILAW container rework that cannot be managed locally, is conducted in the buffer store.

2. Scope

The ILAW container buffer store system scope consists of the following activities:

- ILAW container transfer from the container transfer bogies to the buffer store and buffer store/rework area
- ILAW container transfers within the buffer store and buffer store/rework area
- ILAW container transfer from the buffer store and buffer store/rework area to the weld cave container import position
- Off-normal ILAW container rework
- Decontamination and maintenance of system equipment

3. Applicable Document

BNFL Inc., 2000, *LAW Vitrification System 314, Mechanical Handling Diagram (Level I), Product Container Buffer Store*, DWG-W375LV-M00114, BNFL Inc., Richland, Washington.

4. Functions

- Radiological control between the buffer stores and the buffer store crane maintenance facility
- Radiological control between the buffer stores and the bogie transfer tunnel during hands-on maintenance/recovery operations
- Hands-on maintenance operations in the buffer store crane maintenance facility
- Normal buffer store operations

5. Requirements

Process operations will be automated with the number of stages requiring initiation by the operator minimized. The degree of automation will depend upon the plant area of concern and the process performed. Mechanical handling operations will utilize sequence control where possible, thereby minimizing the number of stages requiring operator initiation.

A process monitoring CCTV system is required for remote viewing of equipment and operations within cave areas where the radiation levels are too high for personnel access. The cameras will be located to give optimum viewing angles and distance to suit the process. The through roof/wall cameras and crane mounted cameras will be radiation tolerant, where required. Monitors and operators controls will be provided at the cave face where required (e.g., product handling), and also at various locations (e.g., CCR) which are located away from the cave face. Control features (e.g., pan, tilt, focus, etc.) will be selectable at any location where an operator requires a variable view to assist in manual operations.

6. Description

LV System 314 (ILAW Container Buffer Store) is located 21 feet below grade. The system interfaces with LV Systems 311 (ILAW Container Receipt and Transfer Line 1), 312 (ILAW Container Transfer Line 2), 321 (ILAW Container Sampling, Lidding – Line 1), and 322 (ILAW Container Sampling, Lidding – Line 2).

The ILAW Container Buffer Store is not part of the process loop. It is only used during off-normal situations. ILAW containers make their way to the buffer store from one of the four systems mentioned earlier in this section. The LV System 311 and 312 transfer bogies, or the LV System 321 and 322 bridge cranes are responsible for placing the ILAW containers in the buffer store import/export position for transfer into the buffer store. Once a container to be transferred to the buffer store is in the import/export position, LV System 314 takes over the import operation. Conversely, once a container has been placed in the import export position by buffer store container handling equipment for export to one of the previously mentioned systems, the container is now that system's responsibility.

The LV System 311 and 312 bogie transfer tunnel runs all the way to the east-end of the building. This transfer tunnel splits the buffer store into two separate areas, the ILAW Container Buffer Store (area to the north of the transfer tunnel) and the ILAW Container Buffer Store/Rework Area (area to the south of the transfer tunnel). The buffer store import/export positions are located within this section of the bogie transfer tunnels. Concrete walls approximately 12 feet tall with passages for ILAW containers separate the north and south stores from the bogie transfer tunnel. The passages are equipped with manually operated steel shield doors to support any maintenance or bogie recovery operations that might be required in this portion of the transfer tunnel. LV System 321 and 322 bridge cranes operating in the weld cave above this section of the transfer tunnel transfer ILAW containers to and from the buffer store import export position.

Buffer store container transfer operations are conducted with the use of a 10-ton bridge crane. The crane runways begin in the crane maintenance facility at the north end of the buffer store and extends south. The runways provide crane coverage to the crane maintenance area, the ILAW Container Buffer Store, the bogie tunnel and the two container import/export positions, and the ILAW Container Buffer Store/Rework Area. There are 12 container storage positions in the north portion of the store, 8 container storage positions in the south portion of the store, and 1 rework position, also in the south portion of the store. The rework position is located in the southeast corner of the ILAW Container Buffer Store/Rework Area. The rework position is fitted with a powered turntable and is covered by a pair of master-slave manipulators (MSMs) and a shielded window. Directly east of the rework position, on the cold side of the buffer store, is a rework area operating platform that provides operator access to the MSMs and shielded window.

Insulated support frames in both the north and south stores protect the concrete floor from the heat of the containers. The support frames cover the entire store area and are designed to prevent contamination from migrating below the frames.

An underhung bridge crane suspended from the maintenance facility ceiling is used to support maintenance operations on the main bridge crane. A steel shield door approximately 20 feet wide by 12 feet tall, along with a concrete wall rising from the floor, approximately 12 feet tall, separate the crane maintenance facility from the buffer store. They allow maintenance operations to be conducted while the buffer store is occupied by full ILAW containers.

All buffer store operations are conducted remotely with only a few exceptions. Maintenance operations in the bogie transfer tunnel and bogie recovery operations may require hands-on intervention. Buffer store crane maintenance operations are completely hands-on. Buffer store crane recovery operations, however, are not. They are remote in that during crane drive failures, redundant crane drives take over to complete the task at hand and drive the crane into the crane maintenance facility for repair.

7. Operations

This operation begins with a loaded LV System 311 or 312 ILAW container transfer bogie parked in one of the buffer store import/export positions.

- The buffer store crane is transferred to the appropriate import/export position.
- The grapple is lowered and attached to the ILAW container.
- The ILAW container is raised to transfer height.
- The ILAW container is transferred through the buffer store passage and positioned over the next available storage position.
- The ILAW container is lowered and placed in the storage position.
- The grapple is released and raised to transfer height.
- ILAW Container Transfer from Weld Cave-to-Buffer Store.
- This operation begins with a container placed in one of the buffer store import/export position by an LV System 321 or 322 bridge crane.
- The buffer store crane is transferred to the appropriate import/export position.
- The grapple is lowered and attached to the ILAW container.
- The ILAW container is raised to transfer height.
- The ILAW container is transferred through the buffer store passage and positioned over the next available storage position.
- The ILAW container is lowered and placed in the storage position.
- The grapple is released and raised to transfer height.
- ILAW Container Transfer from Buffer Store-to-Weld Cave

- This operation begins with a ILAW container in the buffer store ready to be exported to the LV System 321 or 322 weld cave.

- The buffer store crane is positioned over the ILAW container to be exported.

- The grapple is lowered and attached to the ILAW container.

- The ILAW container is raised to transfer height.

- The ILAW container is transferred through the buffer store passage and positioned over the required buffer store import/export position.

- The ILAW container is lowered and placed in the buffer store import/export position.

- The grapple is released and raised to transfer height.

- The buffer store crane is transferred back into the buffer store.

LV System 321/322: ILAW Container Inert Fill and Lid Weld

1. Introduction

The Low-Activity Waste (LAW) Vitrification (LV) Inert Fill and Lid Weld System provide the infrastructure necessary to add the inert fill, install and weld the closure lid and repair these welds on the ILAW containers if required.

The LV System 321/322 Product Container Weld will weld the final lid in place on the container. The system also includes glass level detection, glass sampling, inspection of the outside of the container for glass and inspection of the weld.

The inert fill will occupy the void space between the top of the glass and the lid of the container to satisfy void space requirements.

The welding rework equipment will remove defective weld areas or to machine out a complete weld for replacement of a defective/damaged lid.

2. Scope

The inert fill and lid welding systems provide the equipment, controls and interlocks necessary to sample the glass, add the required inert fill, weld the container closure lid and provide repair capabilities to these welds in a manner that will accomplish the following:

2.1. Inert Fill Area

- Import container
- Remove temporary lid
- Visually inspect inside of container for debris
- Measure glass height
- Take glass shard samples
- Add inert fill
- Measure inert fill height
- Visually inspect inert fill
- Install temporary lid

2.2. Welding Area

- Import "new" lids
- Install lids on the container
- Weld lids
- Visually inspect welds
- Repair lid welds
- Electronically record all essential welding parameters for data history of the container

3. Applicable Document

BNFL, *LAW Vitrification System 321/322 Mech. Handling Diagram Level I Solid Waste Container Lidding Area Sheet 1 of 1,* DWG-W375LV-M00951, BNFL Inc., Richland, Washington, USA.

4. Function

The primary functions of LV System 321/322 are to add the required inert fill inside the container (after the glass has been poured) and weld the lid on the top of the container. Secondary functions of LV System 321/322 are to verify the glass volume, calculate the required inert fill volume and verify the inert fill volume. The system also takes samples of the solidified glass, places the glass shards in a vial and passes these vials to the laboratory. The system also is able to remove defective welds, reweld/rework defective welds and remove glass that has spilled on the outside of the container in the areas of the lid weld.

5. Description

The final welding and inert fill addition takes place in the inert fill and lidding cave. Within this cave are two working areas. They are the inert fill station and the welding station.

The containers are transported to the LV System 321/322 cave by the LV System 311/312 transfer bogie. The LV System 311/312 transfer tunnel is below the lidding cave on the –21' level. The bogie transfers the container under the shielded hatch in the floor of the lidding cave at the +3' level. The hatch opens and the overhead crane in the lidding cave lowers the grapple to the container. After the grapple is attached to the container, the container is raised from the transfer tunnel up to the lidding cave.

As the container is raised through the hatch, cameras (situated around the hatch looking at the container) are used to inspect the outside of the container for glass. Any glass deposits on the welded area will be removed from the container at the inert filling station. The glass is removed with a master slave manipulator (MSM) friendly needle gun and the resultant glass shards are collected for disposal in a shop type vacuum.

The container is placed in the inert fill station. There are locating guides on the floor to locate the container. The temporary lid on the container is removed with an MSM and placed on a storage rack. An ultrasonic (UT) distance measuring system is used to measure the height of the top of the container and then measure the top of the glass inside the container. The LV System 321/322 calculates the glass volume with these two measurements and then calculates the required volume of inert fill to be added.

The inside of the container is visually examined for debris. The glass shard collection tray is placed on top of the container and a collection vial is placed in its slot in the tray, both of these operations are performed with an MSM. The glass shard sampler is used to pickup the sample volume of glass shards. These shards are then deposited in the vial. This process is repeated until the vial has the required volume of glass. The vial is then transported to the analytical labs.

There is a "Day" hopper of inert fill on the +28' level. The required inert fill is dispensed from the bulk hoppers in the pretreatment plant and transported in an air conveyor line. The area on the upper flange that receives the temporary and primary lids is examined for inert fill/dust. If any of this contamination is

present the MSM and an attached brush is used to sweep the area clean. The temporary lid is picked up from the storage rack with a Lid Lifter (or as a backup the MSM) and placed back on the container.

This container is then picked up with the overhead/grapple and moved to the welding station. A primary lid is imported into the cave with the posting box/import drawer. The welding area has a frame (welding station carriage) that is used to hold the welder, and the lid lifter. This frame is moved with linear actuators as required to align each of the three tools, as they are required. The lid lifter picks up the newly imported lid and places it on the container. The welder is moved above the container and lowered to the container. The welder tack welds the lid in place, and the welds are visually inspected. The complete lid is welded with the GTAW and visually inspected. The welding parameters are verified for compliance with acceptable values.

The lid may be rewelded if the welding parameters are out of the acceptable range or if the weld is visually unacceptable. The flange-conditioning tool is used to remove a defective weld or remove the complete weld to replace a damaged lid.

When the container is acceptable it is exported to the decontamination line using the overhead crane/grapple that is part of System 321/322.

6. Operation

The following are normal operations specific to the welding system, level measurement, welding inspection, and back-up welding system.

6.1. Welding System

The Container welding system includes all equipment used to seal weld the lid onto the filled Containers and all data recording equipment. Most equipment is remotely controlled through robotic or automatic operations.

A load cell is located within the overhead crane to measure the weight of the containers. Prior to welding the lid on the container, the exterior of the container is inspected for glass. If any glass is found it is removed with a pneumatic needle gun, and all residue is vacuumed clean. The depth of the glass in the container will be measured. If the glass is not high enough, the container be returned to the melters and filled to the proper level.

The welding process is automatic GTAW (gas tungsten arc weld). The design is for the weld to be autogenous (no filler material). The welding equipment has the ability to add filler material if a condition would warrant this, such as a weld defect repair. The welding torch has an arc voltage controlled head, the ability to remotely control the torch angle (trailing, leading, inboard, outboard), and travel speed and travel direction. The welding current, voltage, and pulsing frequency is controlled from ex-cave. The welding machine is preprogrammed with all of the acceptable welding parameters for future use.

All of the actual welding parameters are recorded on a data recorder and a visual inspection of the finished weld will be performed. This is the equipment/process that is used for the quality control (QC) of the welding operation and for acceptance or rejection of a weld.

If a weld is rejected, it can be repaired by three different methods. The preferred method of repair is by remelting the weld. If this is not possible, the weld can be mechanically removed by the flange-

conditioning tool and subsequently rewelded by this system using a filler material. Should these attempts at weld repair fail, the third method is to place another lid over the first lid and weld it in place.

6.2. Level Measurement

Using an ultrasonic distance measurement system performs the glass level measurement. An initial height measurement is taken on the container with the lid in place. After the lid is removed a second measurement is taken. The system will calculate the void space above the glass with difference of the two UT measurements and the contour of the container. The difference of the void space and the container full volume gives the percentage filled volume.

As a backup to this system, the side of the shard sampler has a dipstick to measure the depth. This backup system is operated through the MSMs.

6.3. Welding Inspection

All welds (including the tackwelds) will be visually inspected to assure compliance with the applicable visual welding inspection criteria. This operation is performed using an in-cave camera dedicated for welding inspection. The inspection may be supplemented with in-cave cameras for general cave work and by looking directly through the cave window.

6.4. Inert Fill

This part of the equipment will be used to hold a measured amount of inert fill in a hopper, move the hopper to the required location and dispense the inert fill into the container. Another function of this equipment is to hold the U.T. probe and inert fill recovery vacuum and move this equipment to their required locations.

7. Interlock Requirements

A partial list of interlock requirements is presented below, but it is still under development.

7.1. Hatch Door

Instrumentation, alarms, controls, and/or interlocks are provided to indicate and/or prevent raising or lowering the container through the hatch while the hatch door is not closed.

7.2. Welding Station Carriages

Instrumentation, alarms, controls, and/or interlocks is provided to ensure that carriages will not move when any of the equipment mounted on the frame is deployed or in operation.

LV System 331/332: ILAW Container Decontamination, Swabbing, and Monitoring

1. Introduction

LV System 331/332: Immobilized Low Activity Waste (ILAW) Container Decontamination, Swabbing, and Monitoring, provides the infrastructure necessary to decontamination the "product" or ILAW container and to verify contamination levels before exporting the container into the container storage area.

2. System Scope

This document discusses the preliminary scope boundaries for LV System 331/332. This document identifies the equipment, controls, and interlocks that is designed and maintained under System 331/332. The overall purpose of System 331/332 is to decontaminate glass filled containers and verify contamination levels meet design requirements.

3. Applicable Document

BNFL Inc., 1999, *Process Flow Diagram, LAW Vitrification, Container Decontamination,* DWG-W375PR-01009, BNFL Inc., Richland, Washington.

4. Function

<u>Decontamination Station</u>

The decontamination station provides the following functions:

- Removing contaminants on all surfaces of the product container
- Provide containment of any airborne contaminates imported from the weld station and/or produced during decontamination
- Provide proper collection and disposal of waste stream
- Provide liquid CO_2
- Importing of the container from LV System 321/322 (Product Container Lidding)
- Exporting of the container into Swabbing and Swab-Monitoring Station
- Provides adequate storage for liquid CO_2
- Converts liquid CO_2 to dry ice in the pelletizer
- Air compressor system provides compressed air necessary for the transport of the CO_2 pellets from the pelletizer to the nozzles and to the surface being cleaned
- Vacuum system removes airborne contaminants dislodge from the surface by CO_2 blasting

- Identify and record product container number, along with any pertinent information

Swabbing and Swab-Monitoring Station

The swabbing and swab-monitoring station provides the following functions:

- Ability to perform swabbing of product container
- Provide classification and disposal of used swabs
- Provide adequate shielding in swab export equipment
- Importing of the container from Decontamination Station
- Exporting of the container into Maintenance Station
- Importing of clean swabs into swabbing station
- Exporting of contaminated swabs into a glovebox away from any possible radiation source for analysis
- Monitoring swabs to confirm surface contamination
- Identify and record product container number, along with any pertinent information

Container Fixative Station

The container fixative station provides the following functions:

- Fix contaminants on all surfaces of the product container
- Importing of the container from either swabbing line
- Exporting of the container to either swabbing line
- Provide adequate cooling and drying area

Container Monitoring Station

The container monitoring station provides the following functions:

- Measure the surface dose rate of the container to ensure the external surface does not exceed 1,000 mrem/hr
- Importing of the container from Swabbing and Swab-Monitoring Station
- Exporting of the container into System 340 (Product Container Storage and Export)
- Identify and record product container number, along with any pertinent information
- Measure the surface dose rate of the container

Line Transfer Station

Functions of the line transfer station includes the following:

- Provide a route between lines, if one decontamination or lidding line is temporary off line
- Provide area and equipment to repair and maintain equipment within the line transfer station
- Provide route for importing/exporting large equipment into the line transfer station
- Lift equipment in and out of the finishing lines
- Provide maintenance areas for repairing basic equipment within the finishing lines

5. Description

The decontamination area is located within the finishing lines in the LAW Vitrification Facility. There are two separate lines that are mirror images of each other. Each line is approximately 15 ft x 45 ft x 25 ft which includes power manipulators, turntables, cranes and hoists, and a bogie.

The line transfer station is located directly above both decontamination stations. This station is used to transport containers between the two lines. It is approximately 32 ft x 20 ft x 20 ft which includes hatches, maintenance facilities, and a crane.

The fixative station is located above both lines' swabbing station. Each line is approximately 56 ft x 23 ft x 20 ft which includes the fixative booth, hatches, and a crane.

The following facilities are needed to support the system requirements:

- CO_2 pellet production
- Decontamination station
- Swabbing and swab-export station
- Fixative station
- Line transfer station
- Monitoring/export station

The "product" containers, used to store the radioactive glass, are stainless steel cylinders, approximately 7.5ft (high) x 4ft diameter. After the ILAW container has been cooled and welded, it is transported to the CO_2 blasting decontamination station. The container is electrically grounded during blasting operation due to static electricity generated during CO_2 blasting. Equipment items located in the decontamination station include the CO_2 gun, vacuum system, and tracking system. All other items are located outside of the hot cell.

The liquid CO_2 from the tank is then routed to the pelletizer via transfer lines for solid CO_2 production. The liquid CO_2 enters the pelletizing chamber within the pelletizer. Here a rapid expansion of the liquid within the chamber reduces the pressure dramatically and converts CO_2 to a solid state in the form of snow. The snow is then compressed into solid form. This solid is then extruded into solid pellet form through a die under hydraulic pressure. This creates an extremely dense pellet for maximum impact energy.

Once the pellets reach the guns, they are entrained in the high-pressure air by way of a venturi effect, and are propelled from the nozzle. When the dry ice pellets hit the surface, their kinetic energy causes them to shatter and fragment, penetrate the base material, and dislodge the contaminants from the base material.

The dry ice pellets instantly sublimate, which adds a lifting force that speeds the removal of the contaminants. The blasting gun contains a vacuum recovery nozzle with a super dry air annulus to recover the effluent from the cleaning operation. Produced debris is collected with a HEPA filtered vacuum system. This gas stream is then routed to the facility vent system where it is passed through the facility's HEPA filters before being discharged through the stack.

Once the container is decontaminated, it is transported from the decontamination station and into the swabbing station. The swabbing machine uses a power manipulator to maneuver the cotton swabs over the surface. If contamination levels exceed C3 criteria, the container is transported back into the decontamination station for rework.

If contamination levels lie between C3 and C2, the container is transported into the fixative station, located above the swabbing station, through the fixative hatch using the fixative crane. The container is placed onto the cooling/drying stand where the container is allowed to cool to the desired temperature. The fixative crane transports the container into the fixative booth and the fixative nozzle spray a fixative is applied over the entire container surface. After a brief curing time, the container is placed back onto the cooling/drying stand until the fixative is fully cured.

If the container meets C2 criteria, the turntable bogie moves into the monitoring/export station. As the container is transported into the monitoring/export station from the swabbing station, gamma monitoring measures the surface dose rate of the decontaminated container. If the container exceeds the contract requirement of 1 R on contact, it is classified as an out-of-spec container; otherwise, the dose rate is measured and is recorded within the container's records. The container is then exported out of the decontamination area into System 340 (product container storage and export).

6. Operation

6.1. Decontamination

Under normal operation, System 331/332 receives the container from System 321/322 ("product" container lidding) via the lidding process crane. The lidding crane enters the decontamination area where the decontamination system decontaminates the bottom of the container. The lidding crane lowers the container onto the decontamination turntable and leaves the decontamination station. The decontamination system decontaminates the top and sides of the container. Once the decontamination process is completed, the decontamination process crane enters the decontamination station, lifts the container and transports it into the swabbing station through the decontamination/swabbing containment door.

6.2. Swab and Swab-Monitoring

After the initial decontamination of the "product" container, it is transported to the swabbing station for monitoring to verify that its surface contamination meets the contract requirements. A power manipulator is used to swab the surface of the container. After a prescribed area is covered, the contaminated swabs are exported away from any radioactive source for monitoring to determine gamma-beta and alpha levels for smearable contaminates. The container is rotated until the entire container surface has been swabbed.

If a "product" container fails to meet the acceptance contract criteria for surface contamination, it is either posted back into the decontamination area for further treatment or transported into the fixative. If subsequent decontamination is required, the CO_2 blasting guns may focus on a specific area and/or the operating parameters adjusted to increase the cleaning power.

6.3. Container Fixative Station

If contamination levels do not meet C2 criteria, the container is transported into the fixative station. The container is first placed onto the cooling/drying stand where the container is allowed to cool. The fixative crane then transports the container into the fixative booth and a fixative is applied to the entire surface. After a brief curing time, the container is placed back onto the cooling/drying stand until the fixative is fully cured. The container is then lowered back into the swabbing station.

6.4. Container Monitoring/Export Station

Before final export to the storage area, each container is measured for surface dose rate levels. The container is received from the swabbing station. A gamma scan array is used to measure the container. The gamma scan array is linked to a computer. The operator would verify the process, then record the reading. If the container fails to meets the contract surface dose rate requirements of 1 rem/hr on contact, the container is labeled as an out-of-spec container. The container is finally exported to System 340 (Product container storage and export) through the storage hatch door.

7. Interlock Requirements

Presented below are the preliminary Interlock Requirements features for this system.

7.1. Decontamination Turntable Bogie

Decontamination Bogie instrumentation, alarms controls, and/or interlocks will be provided to indicate and/or prevent the following conditions:

- Collision with Swabbing/Export Containment Door, and other obstacles
- Movement of bogie when bogie lock is engaged
- Movement of bogie when turntable lock is not engaged

7.2. Decontamination Process Crane

Decontamination Process Crane instrumentation, alarms controls, and/or interlocks will be provided to indicate and/or prevent the following conditions:

- Collision with Lidding/Decontamination and Decontamination/Swabbing Containment Doors, and other obstacles
- Movement of decontamination crane when lidding bogie is present within the decontamination area
- Movement of decontamination crane when line transfer trap door is open
- Movement of decontamination crane when fixative trap door is open
- Long travel movement of decontamination crane when hoist is out of transport height
- Movement of decontamination crane when container bottom is being swabbed
- Movement of decontamination crane into the lidding area, except during recovery operations

7.3. Decontamination Station

Decontamination Station instrumentation, alarms, controls, and/or interlocks will be provided to indicate and/or prevent the following conditions:

- Opening of lidding/decontamination or decontamination/swabbing containment door during decontamination

- Opening of lidding/decontamination and decontamination/swabbing containment door at the same time

7.4. Decontamination Unit

Decontamination Unit, which includes gun nozzles, its robotic components and container rotation device, instrumentation, alarms, controls, and/or interlocks will be provided to indicate and/or prevent the following conditions:

- No relative movement of power manipulator and power manipulator mast
- No relative movement of turntable
- Loss of pressure in CO_2 gun
- Loss of pressure in the pelletizer
- Loss of air flow in vacuum system
- Collision with product container and other obstacles
- Start of system when lidding/decontamination shield door is open
- Start of system when decontamination/swabbing containment door is open
- Start of system when personnel are present within the decontamination area

7.5. Turntables

Decontamination and Swabbing Turntable instrumentation, alarms, controls, and/or interlocks will be provided to indicate and/or prevent the following conditions:

- No relative movement during lifting and/or lowering of cranes

7.6. Tank and Vessels

Liquid CO_2 Storage Tank instrumentation, alarms, controls, and/or interlocks will be provided to indicate and/or prevent the following conditions:

- Low level

- Liquid CO_2 leaking from tanks and associated piping including the pipe into the LAW building, caused by breaching or corrosion

- Loss of pressure

7.7. Air Compressor/ Air Dryer

Air Compressor/ Air Dryer instrumentation, alarms, controls, and/or interlocks will be provided to indicate and/or prevent the following conditions:

- Loss of pressure

7.8. Pelletizer

Pelletizer unit instrumentation, alarms, controls, and/or interlocks will be provided to indicate and/or prevent the following conditions:

- Low pressure in the outlet line
- Sensor when a container enters the decontamination area
- Low liquid CO_2 supply to the unit

7.9. Vacuum System

Vacuum System instrumentation, alarms, controls, and/or interlocks will be provided to indicate and/or prevent the following condition:

- Low air flow
- High differential pressure across the HEPA filter

7.10. Swabbing Station

Swabbing Station instrumentation, alarms, controls, and/or interlocks will be provided to indicate and/or prevent the following condition:

- Personnel access when a container is present in decontamination station
- Opening of decontamination/swabbing or swabbing/export containment door during swabbing

7.11. Swabbing Unit

Swabbing Unit, which includes gun nozzles, its robotic components and container rotation device, instrumentation, alarms, controls, and/or interlocks will be provided to indicate and/or prevent the following conditions:

- No relative movement of power manipulator or power manipulator mast
- No relative movement of turntable
- Loss of pressure on the swab end effector
- Collisions with product container, decontamination bogie, swab posting system and other obstacles
- Opening of personnel access door when container is present in the swabbing station and/or maintenance station

- Opening of personnel access door if airborne contamination levels are higher than design contamination classification within the decontamination area

- Opening of personnel access door if high concentration of CO_2 is present within the decontamination area

7.12. Swab Posting and Monitoring System

Swab Posting and Monitoring System instrumentation, alarms, controls, and/or interlocks will be provided to indicate and/or prevent the following condition:

- Rotation of posting turntable during swabbing

- Rotation of posting turntable if radiation levels from swab is higher than design radiation classification in the operational area

7.13. Line Transfer Station

Line Transfer Station instrumentation, alarms, controls, and/or interlocks will be provided to indicate and/or prevent the following condition:

- Opening of personnel access door when container is present in the line transfer station

- Opening of personnel access door when either line transfer trap doors are open

- Opening of both line transfer trap doors at the same time

- Opening of personnel access door if airborne contamination levels are higher than design contamination classification within the line transfer station

7.14. Fixative Station

Fixative Station instrumentation, alarms, controls, and/or interlocks will be provided to indicate and/or prevent the following condition:

- Opening of personnel access door when container is present in the fixative station

- Opening of personnel access door when either fixative trap doors are open

- Opening of both fixative trap doors at the same time

- Opening of personnel access door if airborne contamination levels are higher than design contamination classification within the line transfer station

7.15. Fixative Unit

Swabbing Unit, which includes gun nozzles, its robotic components and container rotation device, instrumentation, alarms, controls, and/or interlocks will be provided to indicate and/or prevent the following conditions:

- No relative movement of robotic arm or floor-mounted mast
- No relative movement of turntable
- Loss of pressure in fixative nozzles
- Collisions with product container, decontamination bogie, swab posting system and other obstacles
- Opening of fixative booth containment door during fixative process
- Start of system when fixative booth containment door is open
- Start of system when personnel are present within the fixative booth
- Start of system if ventilation system fails. If ventilation fails during fixative process, fixative system automatically shuts down

7.16. Container Monitoring/Export Station

Container Monitoring/Export Station instrumentation, alarms, controls, and/or interlocks will be provided to indicate and/or prevent the following condition:

- Opening of personnel access door when storage trap door is open
- Opening of storage trap door when personnel are present within the decontamination area

LV System 340: IHLW Container Storage and Export

1. Introduction

The subject system performs the function of storing the ILAW container (or the "product container) and exporting it to a Hanford TSD site. The system is comprised of a storage facility, export/swabbing area, truck bay and two separate crane maintenance areas.

2. System Scope

This document describes the scope, functional requirements, quality requirements, operation, and maintenance of the Low Activity Waste (LAW) Product Container Storage and Export, System 340. Equipment required to operate and maintain System 340 is described in this document.

The purpose of the LAW Product Container Storage and Export System is to store Immobilized Low Activity Waste (ILAW) containers prior to transferring to a Hanford TSD site.

The "Product" Container Storage and Export System will provide the following facilities:

- ILAW container receipt and storage area
- Container swabbing station for export
- Receiving area for shipping container and transport vehicle
- Area for unloading and loading of the shipping container from/to the transport vehicle
- Loading ILAW container into the shipping container
- Transport trailer/flask storage area

3. Applicable Document

DWG-W375LV-M00791 Mechanical Handling Diagram Level 1, Storage and Swabbing, LAW System 340, BNFL Inc., Richland, Washington

DWG-W375LV-M00795 Mechanical Handling Diagram Level 1, Maintenance and Export LAW System 340, BNFL Inc., Richland, Washington.

4. Function

4.1. Storage Area

The ILAW Storage and Export System includes the following functions:

- Handling of "product" containers – the 10 ton in-cave cranes
- Storage of "product" containers, capacity for about 90 days production
- Importing of the container from the Decontamination, Swabbing and Monitoring (System 333/332)
- Exporting of the container into the Export Swabbing Cell
- Identify and record container number, along with any pertinent information

4.2. Swabbing and Swab-Monitoring Station

The system provides the following functions:

- Monitoring for radiological contamination on product container
- Provide classification and disposal of used swabs
- Provide adequate shielding in swab export equipment
- Importing of the container from the Storage Area
- Exporting of the container into the Export High Bay
- Provide export of swabs into a swab-monitoring area away from any possible radiation source
- Monitoring swabs to confirm surface contamination does not exceed requirements
- Inspection of the container to verify compliance with contract requirements

4.3. Export of the "Product" Containers

This system provides the following functions:

- Monitoring for radiological contamination on transportation flask
- Importing of the container from the Swabbing Export Cave
- Importing shipping flask
- Handling of the transport flask
- Identify and record product container number, along with any pertinent information
- Inspection of the shipping flask and trailer to verify compliance with contract requirements and transportation criteria.

5. Description

5.1. System Description

The LAW Product Storage and Export Facility is located near the east side of the LAW vitrification plant. The L-shaped building consists of a concrete structure about 41 feet tall by 55 feet wide by 295 feet long with a 40 feet by 80 feet truck bay attached to the southeast corner. The "product" containers are stored in the large concrete structure. Loading of containers onto transportation trucks occurs in the Export High Bay. Containers are swabbed and loaded into transportation flasks in the export/swabbing cave.

To import containers into the Container Storage Cave the decontamination bogie (System 331/332) transfers "product" containers into position to enable the storage crane to lift into the storage area. The "product" containers are filled, lidded, decontaminated, and swabbed to verify contamination levels prior to being sent to storage. The bogie locks into position below a trap door in the section of the System 331/332 area that extends into the storage area. The storage area over head crane transfers the "product" containers into the storage area by extending a grapple through the opened shield door and lifting the container through. After the trap door is closed, the crane transfers the container to a designated empty storage location.

The storage area crane retrieves containers after "product" acceptance. The storage crane moves into position above the selected container, picks it up, and transports it above the storage/export trap door. The export/swabbing bogie moves into position to receive the container before the trap door is opened. The storage area crane sets the container on the bogie. The crane hoist is raised and the trap door is closed. The swabbing bogie transfers the "product" container to the swabbing position.

Once in the swabbing position the operator inspects the container, verifies, and records the container number prior to initiating the swabbing sequence. A turntable on the bogie is utilized to provide access to all sides of the container for swabbing. The swab is exported from the cave into the swab-monitoring glovebox, where an alpha/beta/gamma scanner measures radioactivity. The detector first measures the background count, without the swab in position. The swab is then imported into the glovebox, and background count is measured again. The difference in the two readings is due to the radioactivity picked up on the smear. This process continues until the entire top and side surface is tested. Once completed, the container is lifted using the Export High Bay Crane hoist and the bottom of the container is swabbed following the same procedure. If the container fails to meet the contract surface contamination requirements, the container is transported back into the decontamination area (system 331/332) for reworking. If the container passes, the crane transfers the container into an empty transportation flask.

The "product" container, which is confirmed to be free of contamination, is placed in the shipping flask using the hoist on the export crane. The lid is placed onto the shipping flask and then the flask is transferred back onto the trailer. The flask is connected to the trailer and the lid is bolted on after a radiological survey confirms the flask is free of contamination. The outside of the flask is monitored to ensure radiological dose levels are not exceeded.

The export-swabbing areas provides a vestibule for product containers to be moved from the storage cave to the export area. The export-swabbing cave extends approximately 21 feet by 38 feet into the southeast corner of the storage area. One trap door at the 17-foot elevation allows containers to be exported to the export-swabbing cave.

The storage cave crane area is provided with closed circuit TV (CCTV) cameras for in cave surveillance. A through-wall lighting system with fixtures installed at the approximately 17-foot elevation provides the required illumination.

5.2. Environmental Considerations

Remote access to each container is provided overhead because personnel are excluded from entry due to radiological dose rates, therefore, a 4 to 6-inch spacing will be provided.

The impact of temperature, shielding, and environmental conditions are considered in the design of the decontamination cave and equipment within the cave, in terms of corrosion, degradation, and accessibility to equipment. Environmental condition includes the following:

- Maximum operational temperature of about 105°F
- Maximum humidity of about 25%
- Maximum product container surface temperature less than about 280°F

6. Operation

6.1. Storage Area

Under normal operation, System 340 will receive the ILAW container on a bogie from System 331/332, Decontamination, Swabbing, and Monitoring through a trap door. The "product" container is placed on the import bogie after contamination and radiation dose limits are verified to be within specifications. The container is transported on a bogie that locks the container into position under the decontamination/ storage trap door. The crane is moved into position over the trap door and the door is opened. The crane

lifts the container, and places it into the storage area. An operator records the container's identification and position as it is placed into the storage array.

Containers approved for shipment are transported over the storage/export trap door via the bridge crane. The door is opened and the container is lowered onto a bogie waiting below.

6.2. Swab and Swab-Monitoring

After a container is approved for shipment, it is transported to the swabbing area for monitoring to verify that its surface contamination meets the contract requirements. The export bogie transports the container from the import position below the trap door to the swabbing position. A power manipulator is used to swab the surface of the container. After a prescribed area is covered, the contaminated swabs are exported away from any radioactive source for monitoring to determine gamma-beta levels for smearable contaminates.

If a "product" container fails to meet the acceptance contract criteria for surface contamination, it is transported back into the decontamination cave for further treatment.

6.3. Flask Preparation

When the disposal facility is ready to receive the ILAW container, a truck carrying the transportation flasks is dispatched to the LAW product export high bay. The semi-trailer tractor carrying the transportation flask drives into the high bay. The lid fasteners are removed from the flask by the operators. The lid is removed from the flask using the overhead crane. The shipping flask is then removed from the trailer and transported to the export/swabbing cave. Crane operations, and radiological monitoring performed in the high bay are done under the control of operators mainly due to the imprecise placement of the transportation flask in the bay. No automatic controls are identified at this time.

6.4. Container Export

When the transportation flask is in the export/swabbing cave and the container is ready for disposal, the container is lifted by the export area crane hoist and placed into the transport flask. The overhead crane then picks up the flask lid and places it onto the transport flask. The hoist is used to transport the loaded flask. The operator enters the export area and attaches the lid. The rigging is released from the transport flask. The semi tractor brought into the truck bay and hooked up to the trailer. The flask is then transported to the Hanford TSD site.

6.5. Monitoring and Inspection

Closed circuit television cameras mounted on the bridge cranes monitor the storage area. These cameras will be placed to provide general area surveillance and to identify gross abnormal conditions. Periodic inspection of containers is performed with a CCTV camera mounted on the storage cranes.

7. Interlock Requirements

Presented below are the preliminary interlock requirements features for this system.

7.1. "Product" Container Storage Cave

- The three trap doors are interlocked with the storage cranes and bogies such that the trap doors cannot be opened unless a process crane is positioned above the trap door. Conversely, the process cranes cannot leave trap door positions unless the trap door is closed and locked.

- The trap doors are also interlocked with the bogies such that the doors can not open unless a bogie is positioned below the trap door. The interlock prevents the bogie from leaving the trap door position unless the trap door is closed.

- The storage cranes are interlocked with the hoists such that the cranes can only move with the grapple at transport height.

- The storage cranes are interlocked such that their hoists can only be lowered at designated positions in automatic mode, and if over trap doors, when signal confirms door is in open position.

- The storage cranes are interlocked to prevent them from colliding.

7.2. Export/Swabbing Cave

- Swabbing Station instrumentation, alarms, controls, and/or interlocks will be provided to indicate and/or prevent the following condition:

  - Personnel access when a container is present in decontamination station

- Personnel access to the export crane maintenance platform when a container is present in the swabbing station

- Swabbing Unit, which includes gun nozzles, its robotic components and container turntable, instrumentation, alarms, controls, and/or interlocks will be provided and/or prevent the following conditions:

  - No relative movement of container or power manipulator
  - Loss of pressure on the swab end effector
  - Collisions with product container, swabbing bogie, swab posting system and other obstacles

- Swab Posting and Monitoring System instrumentation, alarms, controls, and/or interlocks will be provided to indicate and/or prevent the following condition:

  - Rotation of posting turntable during swabbing

- Export/Swabbing Bogie instrumentation, alarms, controls, and/or interlocks will be provided to indicate and/or prevent the following conditions:

  - Collision with the manipulator
  - Operation of the swabbing manipulator without the bogie in swabbing position

- Swabbing Turntable instrumentation alarms, controls, and/or interlocks will be provided to indicate and/or prevent relative movement during lifting and/or lowering of cranes.

- The PSA door for personnel entry into the export swab cave is interlocked with radiation monitoring and the storage/export trap door. The interlock prevents personnel entry when dose rates are high, or when the trap door is not closed.

7.3. Crane Maintenance Facilities

PSA door for personnel entry into the Storage Crane Maintenance Facilities are interlocked with the respective Crane Maintenance Facility Shield Door in closed position and with a gamma monitor. The interlock prevents personnel entry into the maintenance bay when the shield door is open or if radiological dose rates are high.

LV System 510: LAW Vitrification Plant Liquid Effluent

1. Introduction and Scope

The Liquid Effluent System (LES) receives LAW Vitrification process secondary effluents for storage and transfer, with the exception of the effluent generated from the caustic scrubber (C22007). This effluent is collected in the Caustic Blowdown Collection Vessel (V22001). See drawing number DWG-W375LV-PR01006, Process Flow Diagram, LAW Liquid Effluent System.

Sources of effluents into the LES are production and non-production related activities. Production effluents are radioactive liquids or slurries routinely or periodically generated by the process. These effluents are routed directly or indirectly to the SBS Condensate Collection Vessel (V25003). Liquid effluent from non-production activities, such as vessel, equipment and cell/cave washes, and sump discharges, are routed to one of three vessels depending on the nature of the effluent. Dangerous or radioactive waste is routed to either the Plant Wash Vessel or the C3/C5 Floor Drain/Sump Collection Vessel. The SBS Condensate Collection Vessel and Plant Wash Vessel are located in the LAW Effluent Cell. The C3/C5 Floor Drain/Sump Collection Vessel is located below grade to provide fire protection water collection and to collect effluents from a gravity floor drain system.

2. Process Description

2.1. System Definition

The liquid effluent system consists of the following equipment items and unit operations:

V25001	Plant Wash Vessel (System 510)
V25002	C3/C5 Drain/Sump Collection Vessel (System 510)
V25003	SBS Condensate Collection Vessel (System 510)
P25001A/B	Plant Wash Pump (System 510)
P25002A/B	C3/C5 Drain/Sump Collection Pump (System 510)
P25003A/B	SBS Condensate Collection Pump (System 510)
P250XX	Sump Emptying Pump for V25002 cell (System 510)

Plant and vessel wash effluent entering V25001 will be transferred to V45009, the LAW Pretreatment Plant (LPP) Plant Wash Vessel. The effluent entering V25003 will be transferred to V45009, the PT SBS Purge Liquor Receipt Vessel. Both of these streams are anticipated to have a neutral or caustic pH. All process related C3/C5 drain and sump effluent is routed to the C3/C5 Drain/Sump Collection Vessel (V25002). Effluent drained from WESPs into V25002 will be routinely transferred to the SBS Condensate Collection Vessel (V25003). Non-process related C3/C5 drain and sump effluent entering V25002 by gravity drain from various C3 and C5 locations will be routinely transferred to the Plant Wash Vessel (V25001). This stream is anticipated to have a neutral pH. Water collected as a result of fire protection is routed via a gravity drain system into the C3/C5 Drain/Sump Collection Vessel (V25002).

The functional purpose of this system is to receive effluents for interim storage, and transfer the effluent to Pretreatment Plant (PT Plant). In addition, mixing and sampling of the effluent is performed in this system as required. Table 1 summarizes the effluent origins.

2.2. Plant Wash

Plant Wash Vessel (V25001)

This vessel is designed to handle the largest capacity of either the largest vessel in the LAW Vitrification Plant or the largest volume from any vessel/equipment wash or drain in the LAW Vitrification Plant. The largest volume is from the largest vessel, which is the SBS Condensate Collection Vessel (V25003). The working volume of both the Plant Wash Vessel (V25001) and the SBS Condensate Collection Vessel (V25003) is 18,600 gallons. Effluents are transferred to V25001 using mechanical pumps (Meeuwsen 1999). Effluent sources for V25001 are vessel washes, the effluent from the SBS Condensate Collection Vessel (V25003) and the overflow from the SBS Condensate Collection Vessel (V25003).

The vessel is equipped with a mechanical agitator (P25014) to maintain solids in suspension. The vessel is also fitted with level, density, and temperature instrumentation. The vessel is vented into a common vessel ventilation header that drains into the C3/C5 Drain/Sump Collection Vessel (V25002).

The Plant Wash Pump (P25001A/B) for this vessel can be routed to various locations. Sampling capability is provided using a sampling leg off the pump recirculation line to an autosampler unit. The effluent, including V25001 vessel washings, will be periodically pumped to the LPP Plant Wash Vessel (V45009). The vessel will be pumped out to the LPP Plant Wash Vessel (V45009) when it reaches a predetermined level, or, if necessary, to maintain adequate capacity for planned activities. There are several routes out of the LPP Plant Wash Vessel (V45009) to provide spare tankage and/or storage prior to transfer out to Liquid Effluent Retention Facility or Effluent Treatment Facility (LERF/ETF).

The Plant Wash Vessel (V25001) and the SBS Condensate Collection Vessel (V25003) are located in the same cell. V25001 overflows to the C3/C5 Drain/Sump Collection Vessel (V25002).

2.3. C3/C5 Drain and Sump Collection

C3/C5 Drain/Sump Collection Vessel (V25002)

This vessel is designed for the most probable maximum amount of fire protection water necessary to cover a C3 area (10,000 gallons) as well as hold the volume equivalent to the largest C3/C5 floor area wash. The working volume of this vessel is 16,200 gallons.

The C3/C5 Drain/Sump Collection Vessel (V25002) collects a constant liquid purge gravity drained from the Wet Electrostatic Precipitators (G22101, G22201, and G22301). The maximum total daily volume anticipated from all three WESPs is 300 gal. The overflow from the Feed Receipt Vessels (V21001, V21002, and V21003) is also routed to this vessel.

The vessel is equipped with a recirculation pump and vessel mixing eductor(s) to maintain solids in suspension. The vessel is also fitted with level, density, and temperature instrumentation. The vessel is vented into a common vessel ventilation header that drains into vessel V25002.

The C3/C5 Drain/Sump Collection Pump (P25002A/B) can be routed to various locations. Sampling capability is provided using a sampling leg off the pump recirculation line to an autosampler unit. Routine process-related effluent from WESP drains will be pumped out at least once every other day to the SBS condensate Collection Vessel (V25003). Effluent generated from other sources will be periodically pumped to the Plant Wash Vessel (V25001) when it reaches a predetermined level, or to maintain adequate capacity for fire protection water. The volume in the Plant Wash Vessel (V25001) and those in the LPP facility provide adequate spare tankage and/or storage prior to transfer out to LERF/ETF.

V25002 is located is located on the –21' level in an enclosed C3/C5 cell area. The C3/C5 Drain/Sump Collection Vessel (V25002) overflows to a wet sump in the same cell. This sump is emptied by a pump (P25041) into vessel V25001.

2.4. SBS Condensate Collection

SBS Condensate Collection Vessel (V25003)

This vessel is designed for a 2 day hold-up of the SBS column purge effluent with 3 melters operating. This is also equivalent to a 1 day hold-up from the SBS Condensate Vessels (V22101, V22201, and V22301).

The SBS Condensate Collection Vessel (V25003) receives effluent from SBS Column Vessels (C22101, C22202, and C22301), SBS Condensate Vessels (V22101, V22201, and V22301), the C3/C5 Drain/Sump Collection Vessel (V25002), and the Plant Wash Vessel (V25001).

The vessel is equipped with a mechanical agitator (P25014) to maintain solids in suspension. The vessel is also fitted with level, density, and temperature instrumentation. The vessel is vented into a common vessel ventilation header that drains into the C3/C5 Drain/Sump Collection Vessel (V25002).

The SBS Condensate Collection Pump (P25003A/B) can be routed to various locations. Sampling capability is provided using a sampling leg off the pump recirculation line to an autosampler unit. Vessel washings are routed to the Plant Wash Vessel (V25001). The SBS Condensate Collection Pump (P25003A/B) will pump the effluent daily to the LPP Plant Wash Vessel (V45001). Alternatively, the SBS Condensate Collection Vessels (V22101, V22201, and V22301) have a 2 day capacity and may delay transfer to the SBS Condensate Collection Vessel (V25003).

The SBS Condensate Collection Vessel (V25003) overflows to the Plant Wash Vessel (V25001). This vessel and vessel V25001, the Plant Wash Collection Vessel, are located in the same cell.

3. Functions

The liquid effluent system will provide the following functions:

- Restrict amount of operator dose
- Prevent release of offgas into operating areas
- Provide representative sample or measurement
- Provide solids suspension for transfer
- Receive, store and transfer effluent

5. Normal Operations

This section is a description of the process control sequences employed for LES and for the individual vessels.

Plant Wash Vessel (V25001)

This vessel receives effluent from the C3/C5 Drain/Sump Collection Vessel (V25002) and from vessel washes within LAW vitrification building on a non-routine basis.

- Vessel contents will be continuously agitated with mechanical agitators when the liquid level is above the minimum heel.
- Samples will be obtained as required before transfer to PT.
- One of two pumps, P25001A/B, will be activated as required and with permission from PT.
- Liquid levels will be monitored and appropriately alarmed and interlocked with transfers.
- Temperature will be measured to evaluate transfer capability.
- Density will be measured to evaluate transfer capability.

C3/C5 Drain/Sump Collection Vessel (V25002)

This vessel receives a constant liquid purge gravity drained from the Wet Electrostatic Precipitators (G22101, G22201, and G22301). The vessel also receives effluent from C3 through C5 floor drains via gravity drain and from C3 sumps via mechanical pumps within LAW vitrification building on a non-routine basis.

- Vessel contents will be continuously agitated with mechanical agitators when the liquid level is above the minimum heel.
- Samples will be taken as required before transfers to the Plant Wash Vessel (V25001).
- One of two pumps, P25002A/B, will be activated as required.
- Liquid level will be measured and appropriately alarmed and interlocked.
- Temperature will be measured to evaluate transfer capability.
- Density will be measured to evaluate transfer capability.

SBS Condensate Collection Vessel (V25003)

This tank receives neutral to slightly caustic effluent from SBS Column Vessels (C22101, C22202, and C22301) and SBS Condensate Vessels (V22101, V22201, and V22301).

- Vessel contents will be continuously agitated with mechanical agitators.
- Samples will be taken if required before transfer to PT.
- One of two pumps, P25003A/B, will be activated with permission from PT for daily transfers.
- Liquid level will be measured and appropriately alarmed and interlocked.
- Temperature will be measured to evaluate transfer capability.
- Density will be measured to evaluate transfer capability.

4. Safety and Interlock Requirements

The LES safety and interlock requirements have not been completely defined at this design stage. Preliminarily control strategies are defined as follows:

- Provide secondary containment
- Isolate lines when not in use
- Prevent instrument air line contamination
- Select effluent compatible materials for components in contact with effluent
- Size vessel vent system for maximum possible flow

For each effluent collection vessel, a preliminary indication of control and/or interlock features necessary to maintain adequate operations are described below. The impacts to safety of the conditions identified below have not been identified.

Plant Wash Vessel (V25001) and Pumps

Unit instrumentation, alarms, controls, and/or interlocks will be provided to indicate and/or prevent the following conditions:

- Prevent effluent transfer without prior mixing.
- Low/high liquid level
- Loss of agitation function
- Low pump flow measurement
- High/Low pump current measurement
- Prevent inadvertent effluent transfer to PT

C3/C5 Drain/Sump Collection Vessel (V25002) and Pumps

Unit instrumentation, alarms, controls, and/or interlocks will be provided to indicate and/or prevent the following conditions:

- Prevent effluent transfer without prior mixing.
- Low/high liquid level
- Loss of mechanical agitator function
- Low pump flow measurement
- High/Low pump current measurement

SBS Condensate Collection Vessel (V25003) and Pumps

Unit instrumentation, alarms, controls, and/or interlocks will be provided to indicate and/or prevent the following conditions:

- Prevent effluent transfer without prior mixing.
- Low/high liquid level
- Loss of mechanical agitator function
- Low pump flow measurement
- High/Low pump current measurement

Table 1. Effluent Handling Summary

Effluent Origin	Receiving Vessel	Effluent Destination
• V21001, V21002, V21003 (Feed Receipt Vessels Wash) • V21101, V21201, V21301, V21102, V21202, V21302 (Melter Feed and Feed Prep Vessel Washes) • V25002 (C3/C5 Drain/Sump Collection Vessel) • V25003 (SBS Condensate Collection Vessel) • V25003 Overflow	V25001 (Plant Wash Vessel)	V45009 (LPP Plant Wash Vessel). For information about effluent routing in LPP, see *System Description for LAW Pretreatment Plant Effluent Collection*
• C3/C5 Floor Drains • F23XXX, F23XXX (Pour Cell/Container Decon Cell Sumps) • G22101, G22201, G22301 (WESP drains) • V21001, V21002, V21003 (Feed Receipt Vessel overflow) • V25001 (Plant Wash Vessel overflow)	V25002 (C3/C5 Drain/Sump Collection Vessel)	Routine process related WESP drain effluent V25003 (SBS Condensate Collection Vessel) Non-routine V25001 (Plant Wash Vessel)
• C22101, C22201, C22301 (SBS Columns • V22101, V22201, V22301 (SBS Condensate Vessels) • V25001 (Plant Wash Vessel Wash)	V25003 (SBS Condensate Collection Vessel)	V45009 (LPP Plant Wash Vessel). For information about effluent routing in LPP, see *System Description for LAW Pretreatment Plant Effluent Collection*

HV Systems 110 and 131: HLW Melter Feed

1. Introduction and Scope

The High Level Waste (HLW) melter feed system prepares feed for the HLW melter to produce a vitrified product. The process consists of mixing appropriate amounts of glass formers with the blended radioactive feed and feeding the resulting slurry to the melter. The HLW melter feed system consists of the following major equipment:

- HV System 110: concentrate receipt vessels
- HV System 131: glass former feed hopper, melter feed preparation vessel, and melter feed vessel.

2. Description

The feed to the HLW melter consists of a blended waste slurry (solids from ultrafiltration, strontium/TRU precipitate, cesium concentrate, technetium concentrate) mixed with glass formers. The HLW feed system receives HLW waste slurry from the pretreatment facility and mixes the waste slurry with glass formers in the melter feed preparation vessel. The mixed feed slurry is transferred to the melter feed vessel, where it is pumped to the HLW melter.

The HLW melter feed system consists of the concentrate receipt vessels, the glass former feed hopper, the melter feed preparation vessel, and the melter feed vessel. The concentrate receipt vessels, melter feed preparation vessel and melter feed vessel will be designed for seismic loads.

2.1. HLW Concentrate Receipt Vessels

The HLW concentrate receipt vessels receive HLW concentrate from the pretreatment facility. The vessels are located in a shielded cell. The vessels have sufficient storage capacity to supply continuous feed to the melter. Each vessel is equipped with the following:

- Four fluidic mixers
- Four reverse-flow diverters (RFD), two for pumping feed to the HLW melter feed preparation vessel and two for a future feed preparation vessel
- Two RFDs for sampling
- Demister for vessel vent connection
- Two pneumercators for level and density measurement
- Thermowell for temperature measurement
- Cooling water jacket to remove radioactive decay heat from the waste
- Internal wash rings and steam ejector for periodic wash-down
- Overflow to V35003, plant wash and drain vessel

Process control samples are collected from these vessels and analyzed to determine the glass former formulation. After completion of sample analysis, batches of waste are transferred to the HLW melter feed preparation vessel.

2.2. HLW Glass Former Feed Hopper

The glass former feed hopper receives blended glass formers by dense-phase pneumatic conveying from the HLW transporter located at the glass former handling facility. The feed hopper is equipped with a pneumatic blending head at the base of the hopper to re-blend the glass former feed.

The feed hopper is equipped with load cells to weigh the glass formers to confirm that all of the material in the upstream blending silo is conveyed to the feed hopper and to confirm that all of the glass formers are transferred out of the feed hopper to the melter feed preparation vessel.

Compressed air from the plant process air system is supplied to the pneumatic blending head at the base of the hopper. The blending control system opens and closes air valves to the blending head to create air pulses to agitate and blend the hopper's contents.

The hopper is equipped with filters to remove the dust from air used for pneumatic conveying and blending. It is anticipated that a series of single filter cartridges will be mounted on the top of the hopper. At this stage of the design, the required filter surface area and number of filters are not known. The filters are cleaned by introducing compressed air through the cleaning nozzle to blow accumulated dust back into the hopper.

After the blending cycle the glass formers are gravity-fed with a rotary valve into the melter feed preparation vessel, where the blended glass formers are mixed with the HLW concentrate. The rotary valve serves as a contamination barrier between the melter feed preparation vessel and the glass former feed hopper. Due to the potential for radiological contamination of the rotary valve, the rotary valve and isolation valves are located in a glovebox for maintenance activities.

2.3. HLW Melter Feed Preparation Vessel

The HLW melter feed preparation vessel mixes HLW concentrate from the concentrate receipt vessels with glass formers from the glass former feed hopper. The vessel is equipped with the following:

- Mechanical agitator
- Two air displacement slurry (ADS) pumps to transfer waste to the HLW melter feed vessel
- Demister for vessel vent connection
- Two level detection devices for level and density measurement
- Thermowell for temperature measurement
- Cooling water jacket to remove radioactive decay heat from the waste
- Internal wash rings and steam ejector for periodic wash-down
- Overflow to melter feed vessel
- ADS pump for sampling

The sizing of the HLW melter feed preparation vessel is based on the anticipated sample turn-around time of 26 hours for sampling and analysis of the HLW concentrate in the concentrate receipt vessels. The upstream concentrate receipt vessels have sufficient capacity to supply steady 26-hour batches to the feed preparation vessel, with an allowance for re-sampling due to bad samples.

The HLW melter feed preparation vessel is located in the melter cave to facilitate remote removal and replacement of the vessel and its components. Due to the abrasive and corrosive nature of the feed slurry, it is anticipated that the agitator and pumps will need to be replaced within the lifetime of the plant. The vessel will be designed with a conservative allowance for erosion that may preclude its replacement.

2.4. HLW Melter Feed Vessel

The HLW melter feed vessel receives blended melter feed, consisting of HLW concentrate and glass formers, from the HLW melter feed preparation vessel. The vessel is equipped with the following equipment:

- Mechanical agitator
- Two ADS pumps to transfer feed to the HLW melter
- Demister for vessel vent connection
- Two level detection devices for level and density measurement
- Thermowell for temperature measurement
- Cooling water jacket to remove radioactive decay heat from the waste
- Miscellaneous solution addition line
- Internal wash rings and steam ejector for periodic wash-down
- ADS pump for sampling
- Overflow to melter feed preparation vessel

Solutions which may be added via the miscellaneous solution addition line include antifoaming agent to prevent foaming in the melter feed vessel due to the mechanical agitator and sucrose solution to reduce foaming in the melter.

The HLW melter feed vessel is located in the melter cave to facilitate remote removal and replacement of the vessel and its components. Due to the abrasive and corrosive nature of the feed slurry, it is anticipated that the agitator and pumps will need to be replaced within the lifetime of the plant. The vessel will be designed with a conservative allowance for erosion that may preclude its replacement.

2.5. Reverse-Flow Diverters, Fluidic Mixers, and Air Displacement Slurry Pumps

Basic to the HLW melter feed system are fluidic devices for pumping and agitation, all built around the principle of using a fluid, usually air, to move radioactive liquids and sludges. Due to the absence of moving parts, reverse-flow diverters (RFDs) and fluidic mixers are virtually maintenance-free. ADS pumps have few moving parts.

An RFD with RFD charge vessel is located inside the vessel containing the slurry to be transferred. A jet pump air system external to the slurry vessel provides the motive force for transferring the slurry. Slurry is transferred by a cycle of drawing the slurry through the RFD into the charge vessel and then, pressurizing the charge vessel to force the slurry through the RFD into the delivery line leading to the receiving vessel.

A fluidic mixer functions in a manner similar to an RFD. Slurry is drawn into a pulse tube, and then drained by gravity or emptied with air pressure back into the slurry vessel. The motion of the slurry into and out of the pulse tube provides the agitation. Each fluidic mixer employs one pulse tube per jet pump pair.

The key to the ADS pump operation is a two-way valve that alternately cycles between the simultaneous opening of the pump chamber and closing the feed line, then switching position to opening the feed line and closing the pump chamber to the waste. The pump chamber is submerged in the waste slurry. A pneumatic cylinder operates the two-way valve at the base of the pump chamber via push rods. The pneumatic cylinder actuates to open the pump chamber to the waste. The pump chamber vent valve opens, allowing waste to flow into the pump chamber due to the vessel liquid head. With the pump chamber full of waste, the pneumatic cylinder closes the pump chamber port and opens the feed line. The vent valve closes and the pump chamber is pressurized with air to discharge the waste. The control and vent valves and pneumatic cylinder are located in the ADS module inside the melter cave. On shutdown of the ADS pump, flush water clears the pump, line, and nozzle.

3. Normal Operations

Batches of HLW waste slurry are received from the Pretreatment facility into one of the concentrate receipt vessels. Samples are collected from the concentrate receipt vessel for determining the glass former formulation. After completion of sample analysis, batches of waste slurry are transferred from the concentrate receipt vessel to the melter feed preparation vessel. Typically, the concentrate receipt vessels are operated in opposite cycles, where one vessel is filled and sampled while the other is being emptied.

With the feed preparation vessel agitator operating, glass formers are fed from the glass former feed hopper into the melter feed preparation vessel. A rotary valve controls the rate of glass former addition. The agitator is operated continuously to maintain the glass formers in suspension.

The blended waste slurry is then transferred from the melter feed preparation vessel into the melter feed vessel. The agitator in the melter feed vessel is operated continuously to maintain the glass formers in suspension. From the melter feed vessel, the feed slurry is transferred to the HLW melter.

4. Safety and Interlock Requirements

Preliminary safety and interlock requirements are indicated in this section.

The HLW concentrate receipt vessels, the HLW melter feed preparation vessel, and HLW melter feed vessel will have instrumentation and interlocks to indicate and/or prevent the following conditions:

- Vessel overflow
- Loss of vessel integrity
- Loss of cooling water flow
- Loss of agitator function
- Agitator not operated at low liquid level to prevent agitator and/or vessel damage
- High or low pressure, temperature, and/or level

The melter feed pumps are shutdown if there is indication that the pumping system has plugged, lost its integrity, or ceased to function properly or if melter operations warrant pump shutdown. These conditions could be indicated by:

- High or low pump system pressure
- Loss of flow indication
- Loss of power to the melter
- High or low melter pressure

- High melter glass level
- Abnormal melter offgas system temperatures, pressures, and flows
- The glass former feed hopper will include an interlock to prevent the transfer of blended glass formers to the HLW melter feed preparation vessel if the agitator is not operating

HV System 231: HLW Melter Offgas Treatment

1. Introduction and Scope

The purpose of the HV System 231, High-Level Waste (HLW) Vitrification Off-Gas Treatment, is to remove aerosols and noxious gases from the HLW melter offgas and the vessel ventilation system. After treatment, this offgas will be released to the building ventilation system for High Efficiency Particulate Air (HEPA) filtration and release to the HLW vitrification facility main stack.

Melter offgas is generated from the vitrification of HLW slurry feed by a joule-heated ceramic melter. This melter generates offgas, which consists primarily of:

- Air from melter bubbler operation (if used) and inleakage into the melter,
- Water vapor evaporated from the melter feed,
- Acid gases generated from anion decomposition (i.e., CO_2, NO_x, SO_x, etc.), and
- Aerosols from dried melter feed and melter cold-cap reaction solids

Figure 1 provides a simplified representation of where the melter offgas is generated.

In addition, the HLW melter also generates small quantities of other volatile compounds that may require special attention during treatment. Compounds currently being considered for specific treatment include carbon-14, tritium, iodine-129 and/or volatile organics. Carbon-14 and tritium are in the form of carbon dioxide and water, respectively.

In the event of an off-normal occurrence in the HLW melter, the melter offgas generation rate may increase to several times normal flow. This melter offgas surge is a transient increase in steam and decomposition gas generation when the melter feed stream is exposed directly to the melt surface through cracks in the melter "cold cap" or through the phenomenon of "reboil." These surges would normally be accommodated by the primary offgas treatment system. However, in the infrequent event when a predetermined melter pressure is reached, the melter standby offgas system will be activated.

The HLW vessel ventilation system receives offgas from the HLW feed makeup and handling system, other waste handling vessels within the facility, and air operated devices such as reverse flow diverter (RFD) pumps and pulsejet agitators. The offgas received by the vessel ventilation system consists primarily of air, water vapor, and minor amounts of aerosols generated by the agitation or movement of vessel contents. Process vessels are maintained at a negative pressure relative to their respective containment cell by drawing a vacuum on the tanks. Vessels that contain high concentrations of solids such as the melter feed makeup tank and the melter feed tank have washable demisters to minimize the movement of aerosols into the vessel ventilation system. These aerosols contain radionuclides and other chemicals similar to the melter offgas.

The purpose of this document is to provide the following information:

- Process descriptions
- Safety and non-safety system functions
- Normal operational process control system sequences
- Interlocks necessary to maintain safety and operations

This document reflects the current status of the HLW melter offgas system(s) design.

2. References and Applicable Documents

Process Flow Diagrams

- PFD(a), DWG-W375HV-PR00031, *HLW Vitrification – Feed Preparation & Offgas*, BNFL Inc., Richland, Washington

- PFD(b), DWG-W375HV-PR00032, *HLW Vitrification – Offgas Treatment*, BNFL Inc., Richland, Washington

3. Description

The HLW vitrification offgas definition, the process design basis for the offgas treatment system and individual treatment processes descriptions are defined in this section.

3.1. HLW Offgas Definition

The principal components of the HLW melter offgas stream are air and steam. The offgas air component is combined with the HLW melter offgas stream via four sources as follows:

- Melter molten glass air sparging and instrumentation
- Air inleakage into the HLW melter
- Air injection into the melter film cooler
- Melter pressure control air inbleed

Melter air sparging, instrumentation air, and air injection into the film cooler are assumed to be constant during melter operation, including surge conditions. Air inleakage into the HLW melter is assumed to vary based on the changing pressure drop between the melter plenum and the melter cell. During melter surges, air inleakage into the melter is assumed to decrease due to the diminished pressure drop between melter and the cell. Pressure control air added to the offgas stream after the film cooler will vary accordingly to maintain a vacuum in the melter plenum. At a seven times (7X) surge of the normal condensable and non-condensable components, pressure control-air addition will be minimized.

Secondary components of the HLW offgas stream are as follows:

- Steam
- Acid Gases (CO_2, SO_x, NO_x, etc.)
- Aerosols

Water present in the melter feed is vaporized to steam. Acid gases are generated from the decomposition of salts and organic compounds present in the feed. Aerosols are present due to cold cap solids being entrained in the offgas stream.

The aerosols in the HLW melter offgas are assumed to be bimodal, having a significant fraction larger than 16 microns and another significant fraction less than 1.6 microns. The large particulates are assumed to be from cold cap solids entrainment and the smaller liquid aerosols from the condensation of semi-volatile offgas components.

3.2. Process Design Basis

The general process design basis for each HLW offgas system is provided in this section. These process design bases are intended to provide process guidelines for the design of process equipment. Each of these systems will be designed to treat the generated offgas so that it conforms with all relevant federal, state, and local air emissions requirements at point of discharge to the environment.

3.2.1. HLW Melter Primary Offgas Treatment System

The primary HLW offgas treatment system is designed to accommodate a HLW melter glass production rate of 1.5 metric tons per day based on the concentrated HLW feed received from the pretreatment facility. The primary system will be designed to handle intermittent offgas surges with 7X the normal amount of condensable and non-condensable components.

The primary offgas treatment system is located in three distinct areas of the HLW facility. The melter's primary offgas scrubber (SBS) will located in the HLW melter cave. The SBS condensate receiver vessel will be enclosed in a cell below the melter cave. The wet electrostatic precipitator (WESP) will be located adjacent to the wet process cell. The High Efficiency Mist Eliminators (HEMEs) will be located back in the melter cave. The offgas preheaters and the primary offgas High Efficiency Particulate Air (HEPA) filters are located in the filter cave. All HLW primary offgas equipment will be designed for life of facility and/or remotely maintained/replaced.

A pair of HEME/HEPA filter trains will be provided for the HLW melter. One set of HEME/HEPA filters will be in operation while the parallel system is on standby or being washed. A HEME/HEPA filter set will be activated or taken off-line by opening or closing a set on inlet/discharge valves, respectively. The inlet valves will be located in the melter cave with the HEMEs. The discharge valves are located in the filter cave.

3.2.2. Standby HLW Melter Offgas Treatment System

The HLW standby offgas system will help control the melter plenum pressure under high offgas surge situations or if there is a blockage in the main offgas duct to the submerged bed scrubber. The melter plenum pressure needs to be controlled to minimize contamination release to the melter cell, to protect the melter's structural integrity from over pressurization, and prevent damage from occurring to the primary treatment system. This is accomplished by providing an alternate path (i.e., the standby offgas duct) for melter offgas.

A high offgas surge is defined as exceeding the ability of the "primary" offgas treatment system to maintain melter pressure control. In the case of a high melter surge, the combined primary and standby offgas systems (offgas ducts) will effectively provide double the cross-sectional flow area for the melter offgas to flow through. If the primary offgas duct develops a blockage (or partial blockage), the standby system will simply provide an alternate path for the melter offgas. Under this scenario, the primary offgas duct will assumed to have plugged, hence, the standby offgas duct will be sized for 100% of the normal offgas flow from the melter (i.e., identical to the primary offgas duct).

The HLW standby offgas system consists of an offgas duct (identical in size to the primary offgas duct) from the melter to the submerged bed scrubber. The standby offgas duct will have an air purge from the melter overflow sections to inhibit melter offgas (e.g., solids) from entering the duct. This purge air will enter the melter plenum.

The standby system will normally be isolated from the primary offgas system via a fast acting butterfly valve. However, at a 7X surge, this valve will open, providing an alternative path for the melter offgas to flow. The standby offgas duct will extend to the bottom of the SBS packed bed, identical to the primary duct. Therefore, during melter surges the cross-sectional area available for offgas flow will effectively double, decreasing the pressure drop between the melter and the SBS. In case of offgas duct plugage between the melter and the SBS, the standby system would also activate, allowing melter pressure control to continue. Once the cause of the standby system being activated is rectified, the valve would close, returning all of the melter offgas to the primary offgas film cooler and offgas duct. An air purge will be used to keep the standby film cooler and offgas duct clean and prevent plugage.

All equipment associated with the standby offgas system is located within the HLW melter cell and is remotely maintained.

3.2.3. Vessel Ventilation Offgas Treatment

The vessel ventilation offgas system will maintain the various HLW process vessels under a slight vacuum relative to the cell to prevent cell contamination. Vessels containing slurries with high solids content will be equipped with flushable demisters for aerosol removal. The vessel vent system will also receive all offgas generated from RFD pumps and pulsejet agitator operations. The composition of the ventilation air is assumed to be primarily air with slight chemical and radioactive particulate contamination. No significant acid gas contamination is assumed for the vessel ventilation offgas.

The vessel ventilation air is combined with the melter offgas prior to entering the primary system HEMEs. The combined air streams are treated together in the remaining sections of the primary and secondary offgas treatment systems. A pressure control device (i.e., damper or vortex amplifier) is used to balance the pressure between the vessel ventilation system and the primary offgas treatment systems.

3.2.4. Secondary Offgas Treatment System

The combined primary offgas stream and vessel ventilation offgas stream is discharged to the secondary offgas treatment system. The secondary offgas system will treat the combined offgas so that it is acceptable for release into the building ventilation system for treatment by HEPA filtration and discharge to the plant stack. Specifically, the secondary offgas treatment system will remove radioactive hydrogen, carbon, and iodine; volatile organic compounds (VOC); and acid gases (CO_2, SO_x, NO_x, etc.), as required, to meet the facilities air discharge requirements. The system will also be designed to limit potential catalyst poisons from reaching the VOC treatment unit.

The primary offgas treatment system is designed to remove sufficient radionuclides such that the secondary offgas treatment system can be contact or semi-remotely maintained.

3.3. Treatment Process Description

There are three process areas in the HLW vitrification offgas treatment system. Each of these systems is designed for specific purposes and uses appropriate technologies. These systems are defined as follows:

- Primary HLW Melter Offgas Treatment System
  - Film Cooler
  - Submerged Bed Scrubber
  - HLW Condensate Collection Vessel

  - Wet Electrostatic Precipitator
  - High Efficiency Mist Eliminator
  - HEPA Filter Electric Heater
  - High Efficiency Particulate Air Filter

- Standby HLW Melter Offgas System

  - Standby Offgas Duct

- Secondary Offgas Treatment System

  - Caustic Scrubber
  - Effluent Collection Vessel
  - Volatile Organic Compounds Thermal Oxidizer Treatment Unit

The vessel ventilation air is combined with the WESP offgas discharge. The combined offgas is further treatment by the primary HEMEs, HEPAs, and the secondary offgas system. After treatment by the secondary offgas treatment system, the combined HLW offgas is discharged to the building ventilation system for filtration by the facility HEPA filters before being discharged to the environment through the main stack. A block diagram of the entire system has been included as Figure 2.

The following sections describe the three process offgas treatment systems with their related process operations.

3.3.1. Primary HLW Melter Offgas Treatment System

The purpose of the primary offgas treatment system is to cool the melter offgas and to remove offgas aerosols generated by the melter and from the vessel ventilation air. Since offgas radionuclides are primarily concentrated within these aerosols, their removal allows manned access to the secondary offgas treatment system for maintenance. The HLW vitrification offgas extractor fans in the secondary offgas treatment area provide the main motive force to draw the offgas through the primary offgas treatment system. Condensate solutions generated in the SBS, WESP and HEMEs are collected in the condensate collection vessel.

3.3.1.1. Film Cooler

The HLW melter offgas is initially cooled and accelerated through the melter film cooler. The film cooler is essentially a double-walled pipe designed to mix process air with the melter offgas. As shown in Figure 3, compressed air and/or steam are introduced axially through a series of slots or holes in the inner wall of the film cooler.

The primary function of the film cooler is to cool the offgas below the glass sticking temperature to minimize solids deposition on offgas piping walls.

Compressed air (beyond what is needed to cool and accelerate the melter offgas) is injected in or near the film cooler to facilitate melter plenum pressure control. The flowrate of this pressure control air is controlled so that a relatively constant melter pressure is maintained, even as the melter offgas generation rate fluctuates. If the offgas generation rate surges beyond the ability of the melter pressure control system to control, offgas pressure control will be supplemented by the melter stand-by offgas system.

A mechanical reamer may be mounted on the film cooler to periodically remove solids build-up on the inner film cooler wall. The reaming device (wire brush or drill) would be periodically inserted into the film cooler for mechanical solids removal. The determination has not yet been made as to the requirement for the reamer.

3.3.1.2. Submerged Bed Scrubber

The offgas from the HLW melter film cooler is further cooled and treated by a SBS. The SBS is a semi-passive device designed for the aqueous scrubbing of entrained radioactive particulates from the melter offgas. It will also cool the offgas to a desired discharge temperature through the use of coiling coils. The offgas leaves the SBS in thermal equilibrium with the scrubbing solution. As shown in Figure 4, the offgas enters the SBS through an inlet pipe that runs down through the center of the bed to the packing support plate. The bed-retaining walls extend below the support plate creating a lower skirt, to allow the formation of a gas bubble underneath the packing. The entire bed is suspended off the floor of the SBS to allow the scrubbing solution to circulate freely through the bed. After formation of the gas bubble beneath the packing, the injected offgas then bubbles up through the packed bed. The rising gas bubbles also cause the scrubbing liquid to circulate up through the packed bed, resulting in a general recirculation of the scrubbing solution. The packing breaks larger bubbles into smaller ones to increase the gas to water contacting surface, thereby increasing particulate removal and heat transfer efficiencies. The warmed scrubbing solution then flows downward outside of the packed bed through coiling coils and past a cooling jacket which surround the bed. Because the offgas is cooled below its dew point, the scrubbing solution is supplemented by the resulting condensate.

To maintain a constant liquid level within the SBS, it will be equipped with an overflow line that allows for the continuous discharge of offgas condensate and some scrubbed particulates. The rate of condensate discharge is determined by how much the offgas temperature is lowered below its dew point. The condensate and some collected particulates overflow into the SBS Condensate Vessel. The scrubbed offgas discharges through the top of the SBS for further treatment. To help minimize the buildup of the solids in the bottom of the SBS, pulsejet agitators will be used to agitate the bottom of the SBS to facilitate transfer of the solids to the waste system.

3.3.1.3. Wet Electrostatic Precipitator

The SBS offgas is routed to the WESP. The WESP will remove aerosols down to submicron size.

The WESP houses vertical tubes which act as positive electrodes. Each of these tubes also has a single negatively charged electrode, which runs down the centerline of each tube. A high voltage transformer supplies the power to these electrodes. To insure a uniform distribution of the inlet offgas into the electrode tubes, a gas distributor is used. The strong electromagnetic field generated by the tube electrode rod (or wire) applies a negative charge to the offgas particles. These negatively charged particles are then attracted to the positively charged tube walls. Collected particles are washed from the tube wall by condensate that is also collected on the inner tube wall. The quantity of "washing" condensate will be boosted by passing cooling water on the shell side of the electrode tubes, decreasing the saturated offgas temperature and causing condensation. The condensate and collected particulates drain into the SBS Condensate Vessel. A figure of a typical commercial wet electrostatic precipitator is included as Figure 5.

3.3.1.4. High Efficiency Mist Eliminator

The purpose of the HEMEs is to further remove radioactive aerosols from the HLW melter offgas stream, the vessel ventilation system, and to reduce the dust-loading rate on the HEPA filters. A HEME is

essentially a high efficiency demister that has a removal efficiency of approximately 99% for aerosols down to the sub-micron size. As the offgas passes through the HEME, the liquid droplets and other aerosols within the offgas interact with HEME filaments. As the aerosols contact the filaments they adhere to the filaments surface by surface tension. As the droplets agglomerate and grow, they eventually acquire enough mass to fall by gravity to the bottom of the unit, thus overriding the original surface tension, friction with the filaments, and the gas velocity. These collected droplets are assumed to contain the majority of the offgas's radioactivity and will be collected in the bottom of the HEME. The collected condensate will gravity drain into the SBS Condensate Vessel. As the condensate flows down through the filter bed, a washing action is generated that will help wash collected solids from the filter elements. However, some solids may accumulate in the bed over time, causing the pressure drop across the filter to increase. When the pressure drop across the HEME reaches a predefined level, it will be taken offline and washed with process water to facilitate removal of accumulated solids. Insoluble solids are assumed to remain, however, and their accumulation will eventually lead to the entire replacement of the HEME filter bed. A figure of a typical HEME is shown in Figure 6.

3.3.1.5. High Efficiency Particulate Air Filters and Electric Heater

To provide high efficiency submicron removal, the offgas is first heated using an electric preheater to a temperature above the gas streams dew point and then passed through dual HEPA filters. Figure 7 shows the combined offgas flowing through a single HEPA bank. These HEPA filters provide particulate removal efficiency of 99.999%. When the differential pressure drop (or radiation level) across the filters becomes to high, they will be remotely changed out.

3.3.2. Standby HLW Melter Offgas Treatment System

The purpose of the HLW standby offgas system is to treat the melter offgas during high surge flow conditions (e.g. rapid steam generation). The standby system consists of an offgas duct (identical in size to the primary offgas duct) from the melter to the submerged bed scrubber and an isolation valve. During a melter surge (or potentially due to offgas duct pluggage), this valve will open rapidly, providing an alternative path for the melter offgas to flow. This standby offgas duct will extend to the bottom of the SBS packed bed, identical to the primary duct. A maintenance bypass will also be installed (shown in Figure 2), allowing the melter offgas to bypass the SBS and the WESP. This bypass would only be used after the HLW melter has been idled and the cold cap eliminated.

3.3.3. Secondary Offgas Treatment System

The combined HLW offgas stream is discharged for treatment to the HLW secondary offgas treatment system. This system further cools the combined offgas stream to lower the water loading, partially removed acid gases, remove gaseous radionuclide species of carbon, hydrogen, and iodine, and also destroys volatile organic compounds. All condensate generated by the secondary offgas system is collected in the HLW Low Activity Waste Vessel (V35001).

3.3.3.1. Caustic Scrubber

The discharge from the HLW primary HEPAs is further treated by the HLW offgas caustic scrubber. Figure 8 shows a typical packed scrubbing column. The principle purpose of the caustic scrubber is the removal iodine-129. Quantities of acid gases (primarily NO_x) and radioactive hydrogen and carbon will also removed by the column. Absorbed carbon dioxide will be neutralized to sodium bicarbonate.

The contaminated offgas stream will enter the bottom side of the scrubber and flows upward through a packed bed. The offgas flows counter-current to the scrubbing liquid, which is introduced through a

distributor at the top of the packed section of the column and trickles downward through the packing media. Contaminates in the offgas stream are absorbed into the scrubbing liquid through interaction of the gas, liquid, and packing media. The cleaned offgas is passed through a mist eliminator to minimize droplet carryover before being discharged from the column. The discharged offgas will be saturated with water vapor and assumed to be at thermal equilibrium with the recirculation liquid. The scrubbing liquid passes downward through the packing bed and falls into the recirculation/collection vessel at the bottom of the unit. This liquid is recirculated to the top of the column using recirculation pumps.

The scrubbing solution will be cooled by the placement of cooling coils in the recirculation vessel. Chilled water will be used as the cooling medium at a maximum inlet temperature of 10°C. A sodium hydroxide solution will be metered into the vessel to neutralize the collected acid gases in the recirculated scrubbing solution and facilitate contaminate absorption. Process water may also be added to the vessel (as needed) to dilute scrubbing solution and prevent buildup of contaminate salts (i.e., carbonates, nitrates, etc.). The recirculation vessel will be periodically purged to the HLW vitrification low activity waste collection vessel.

3.3.3.2. Organic Thermal Oxidizer Unit

To remove residual VOCs in the HLW offgas stream, a thermal catalytic oxidizer unit will be employed (Figure 9). This unit allows the oxidation of VOC compounds at a relatively low temperature of ~300 °C using a platinum metal catalyst. The organic compounds are converted to carbon dioxide and water vapor.

The thermal oxidizer unit is composed of three components, a heat recovery exchanger, an electric heater, and the thermal catalyst bed. The electric heater is employed to heat the column feed to the desired oxidation temperature. To help conserve energy, the hot exhaust from the unit is used to preheat the feed in an energy recovery exchanger, reducing the electric heater's load. This also helps cool the column exhaust. It is expected that over time the oxidization catalyst will lose effectiveness and will require replacement. The catalyst bed will therefore be designed for the manual removal and replacement when required or after a predetermined life span.

4. Functions

This section outlines the safety and non-safety functions for each of the HLW offgas treatment systems. The overall system function is to protect the public, environment, and operating staff from radionuclide and chemical exposure. This overall function is accomplished as follows:

- Remove sufficient radioactive aerosols from the combined melter and ventilation gases for release to the building ventilation system.

- Treat the combined primary (melter) and ventilation gases so that it complies with release requirements after passing through the building ventilation system.

4.1. Primary HLW Melter Offgas Treatment System

- Provide sufficient radionuclide aerosols removal from the melter offgas to permit safe contact maintenance of the secondary offgas treatment system.

- Control melter pressure to prevent radionuclide release to the melter cell and non-contaminated areas.

- Cool the HLW melter offgas to permit subsequent treatment.

4.1.1. Film Cooler

- Cool the melter offgas to permit downstream equipment to function properly for contaminant removal.

- Cool the melter offgas stream to prevent solids build-up within the offgas piping system.

4.1.2. Melter Pressure Control System

- Control the melter plenum pressure through the addition of control air into the offgas stream after the film cooler.

4.1.3. Submerged Bed Scrubber

- Further cool the melter offgas stream so that downstream treatment units operate effectively.
- Remove entrained aerosols.

4.1.4. SBS Condensate Collection Vessel

- Collect condensate generated by the SBS.
- Collect condensate and wash solutions generated by the WESP.
- Collect condensate and wash solutions generated by the HEME.

4.1.5. Wet Electrostatic Precipitator

- Remove sufficient radioactive aerosols to permit downstream equipment to function properly for subsequent contaminant removal.

- Protect the secondary offgas system from contamination so that the secondary offgas equipment may be safely contact maintained.

4.1.6. High Efficiency Mist Eliminator

- Provide further particulate removal to minimize HEPA filter replacement frequency.
- Protect the HEPA filters from periodic melter surges.
- Provide a backup to the WESP for aerosol removal.
- Remove entrained particulates from the vessel ventilation offgas.

4.1.7. High Efficiency Particulate Air Filter

- Perform final radioactive particulate removal before discharging the combined melter and vessel ventilation offgas to the secondary offgas treatment system.

4.2. Standby HLW Melter Offgas Treatment System

- Provide an alternative pathway for offgas venting in case of melter over pressurization, which could results in spreading radioactive material to the cell and possibly operating areas.

- Protect structural integrity of the melter

4.3. Vessel Ventilation Offgas System

- Prevent migration of radionuclides and noxious gases into the process cells and potentially operating areas.

- Maintain slight vacuum in all process vessels (i.e., breakpots, feed tanks, etc.) to prevent pressurization (or excessive vacuum) and potential impairment of structural integrity.

4.4. Secondary Offgas Treatment System

- Treat the combined HLW vitrification offgas for removal of gaseous radionuclides and reduction of acid gas contaminates so that it can be safely released for treatment in the building ventilation system.

- Remove gaseous catalyst poisons such as SO_2.

4.4.1. Caustic Scrubber

- Removal of radioactive iodine

4.4.2. Energy Recovery Exchanger

- Recover heat from the VOC thermal oxidizer exhaust so that the electrical load on the electric heater is lessened.

4.4.3. VOC Thermal Oxidizer Electric Heater

- Heat the offgas to the required operating temperature of the VOC thermal catalytic oxidizer column.

4.4.4. VOC Thermal Oxidizer Column

- Removal of volatile organics from the HLW offgas stream.

5. Normal Operations

This section provides a description of the process control and indication sequences that will be employed for the overall HLW offgas treatment system and for individual treatment units.

5.1. Primary Pressure Control

There will be two pressure control systems within the HLW offgas system. Both of these systems will use controlled air inbleeds into the offgas stream to maintain pressure and flow control. The first system will use a controlled air inbleed into the offgas stream immediately after the melter film cooler to control the HLW melter plenum pressure. By varying the flow of control air into the offgas stream, the pressure depression within the melter plenum can be regulated. If there were an offgas flow surge, the melter

pressure would rise, causing the control valve to constrict and lower the amount of control air being added to the offgas stream, thereby keeping a constant pressure in the melter.

The second controlled air inbleed will be located at the inlet to the HLW melter offgas extractor fans. The offgas flowrate generated by the combined primary and vessel ventilation systems will fluctuate. Because the offgas extractor fans are assumed to operate at a constant speed, they will require a constant inlet flowrate. This second air inbleed will provide this constant inlet flowrate. As with the melter pressure control inbleed, the extractor fan air inbleed will also fitted with a prefilter to prevent back contamination of the air supply system.

5.2. Stand-By Surge Pressure Control

During surge conditions, the standby offgas treatment system will control the melter's plenum pressure by providing an alternative path for melter offgas. The surge control system will be directly connected to the HLW melter. This line will have a continuous air inbleed to give a slight reverse airflow into the melter during normal melter operations. This reverse airflow prevents melter offgas from entering the standby line during normal operations to prevent line plugging.

6. Safety Interlock Requirements

Safety interlock requirements will be developed under WTP-ISM procedures.

1 **Figure 1. Melter Offgas Generation**

2

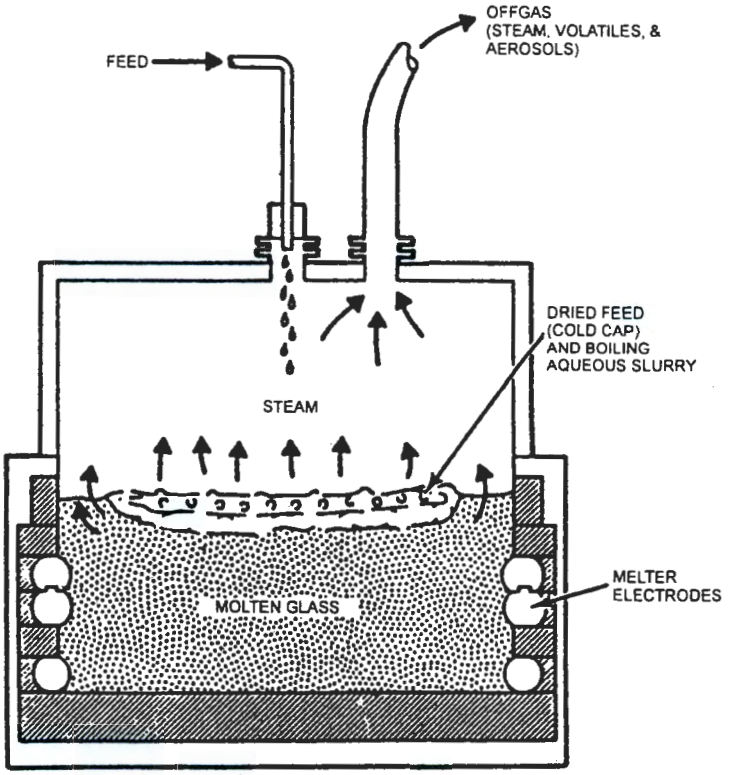

1 **Figure 2. HLW Offgas Block Flow Diagram**

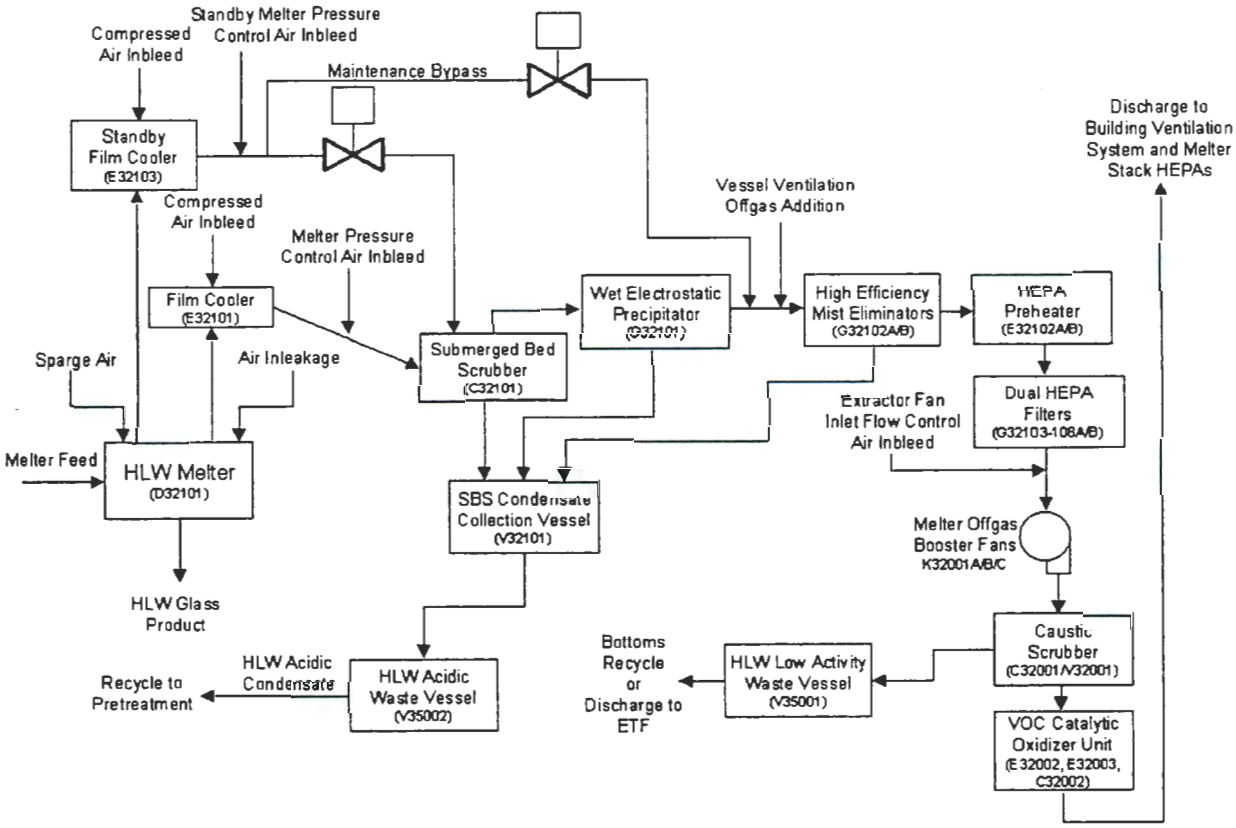

2

Figure 3. Vitrification Melter Offgas Film Cooler

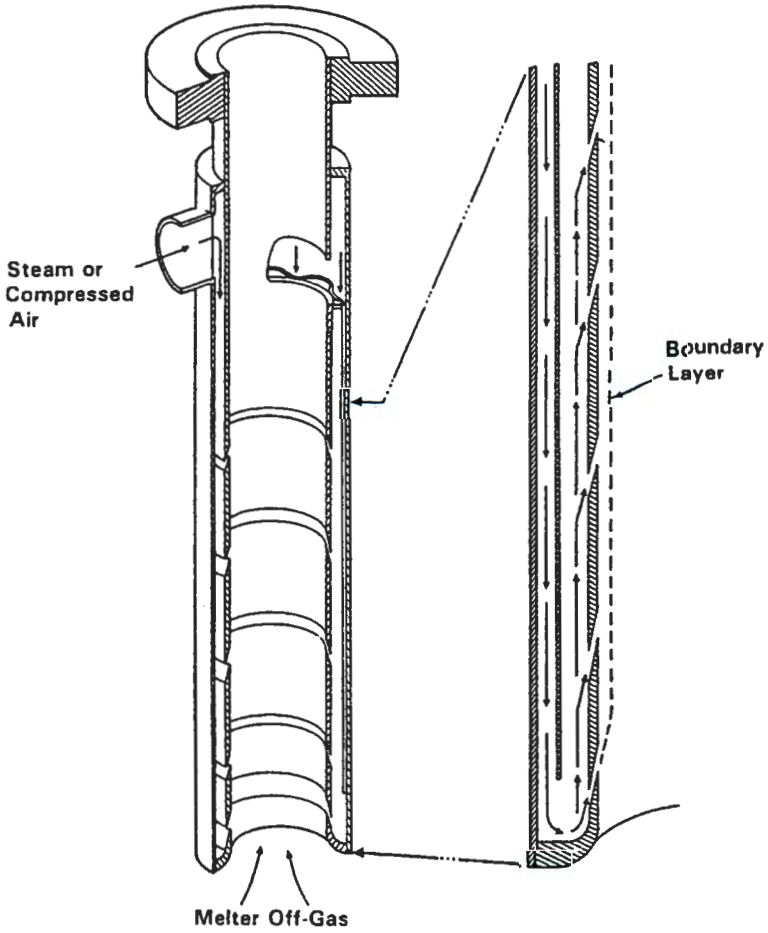

Figure 4. Submerged Bed Scrubber (Schematic)

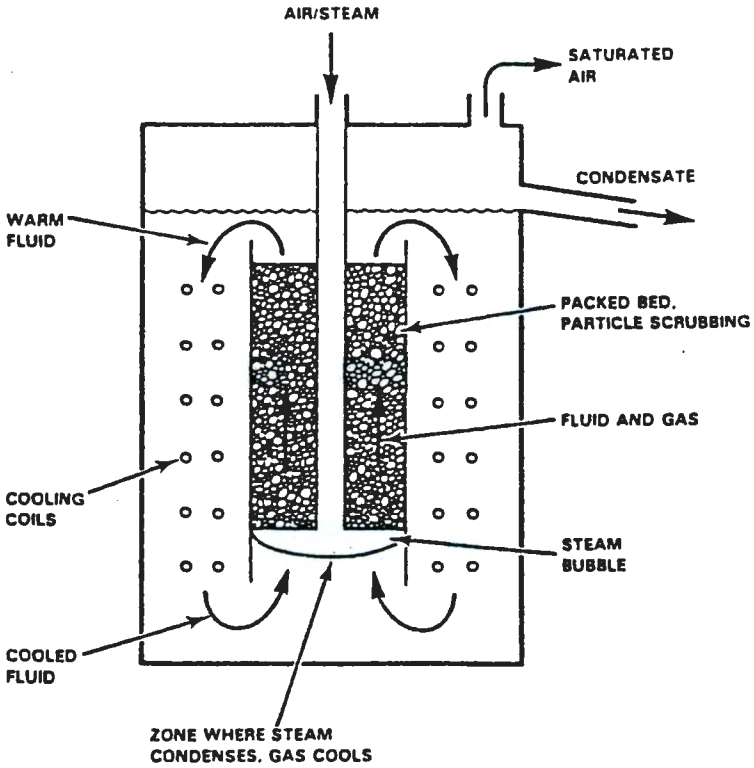

1 **Figure 5. Wet Electrostatic Precipitator**

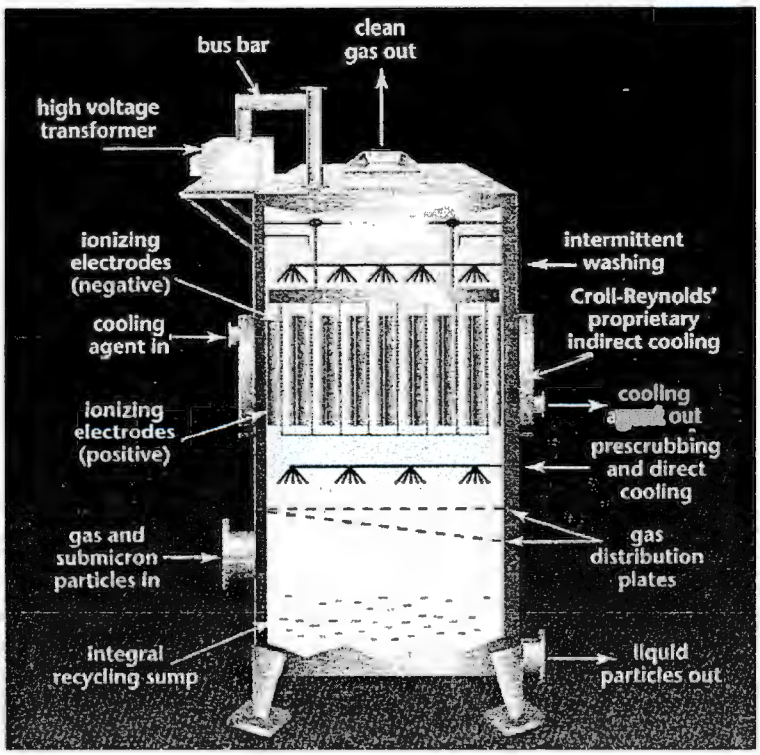

2

Figure 6. High Efficiency Mist Eliminator

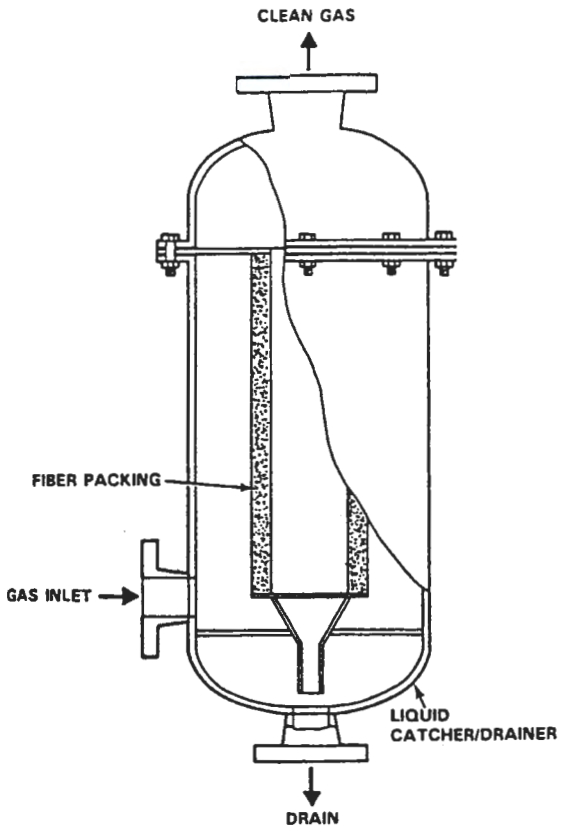

Figure 7. High Efficiency Particulate Air Filter System (Typical)

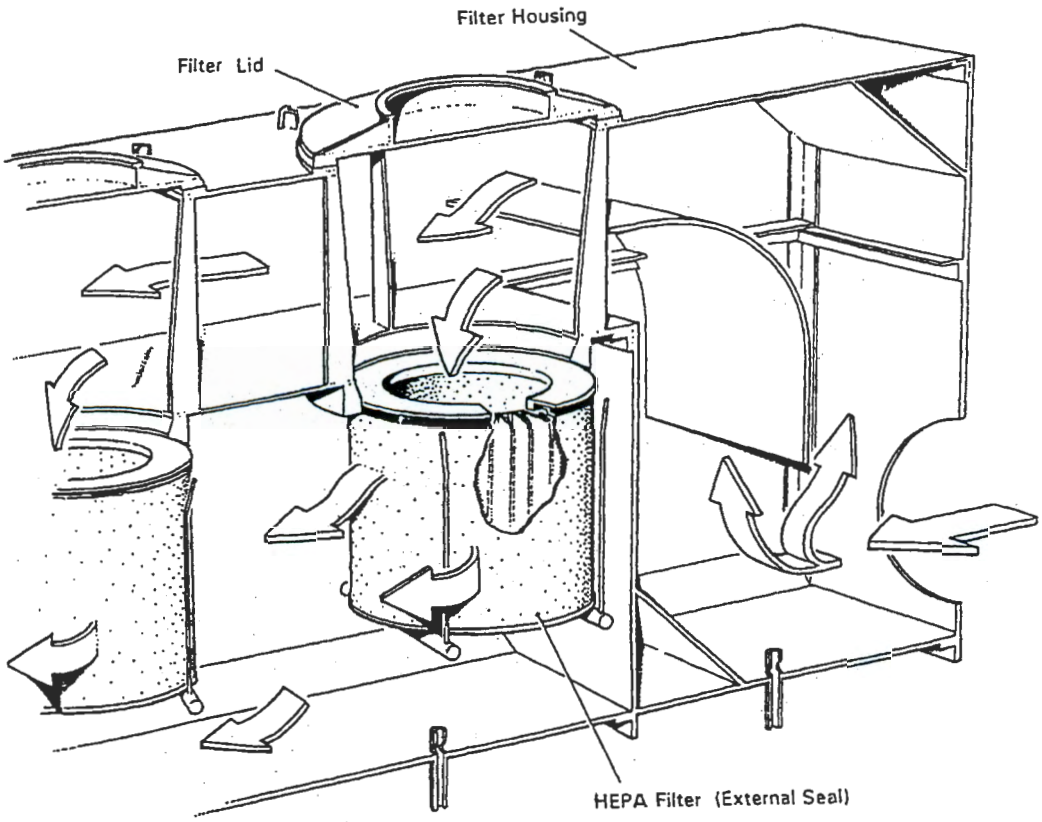

Figure 8. Packed Tower Scrubbing Column

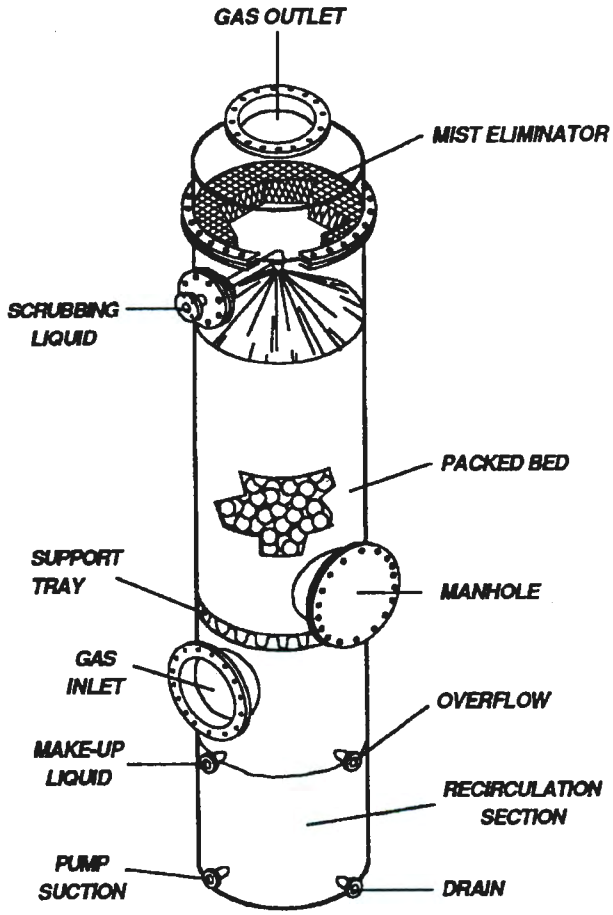

Figure 9. Thermal Catalytic Oxidizer Unit

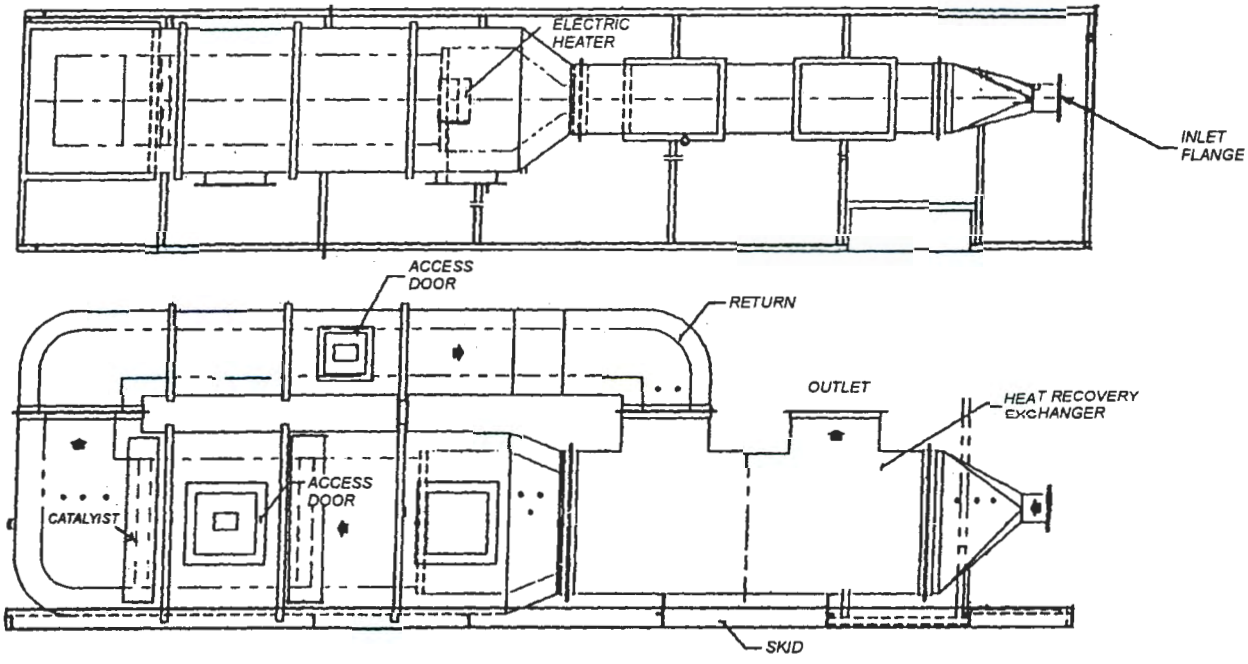

HV System 305: Clean IHLW Container Import

1. Introduction

The primary purpose of High Level Waste (HLW) Vitrification (HV) System 305 – Clean IHLW Container Import is to introduce clean containers into the facility and import containers into the container handling cave (System 310). The system will also provide a buffer storage for importing containers into the container handling cave.

2. Scope

HV System 305 will provide the equipment, controls and interlocks required for importing a clean container into the plant. Areas in the plant bounding this system are the container import truck bay, the import bulge, the container import tunnel and the container transfer interface into the handling cave. These areas are located on the south side of the plant as shown in Figure 1 and Figure 2.

3. Applicable Document

DWG-W375HV-M00593, *HLW Vitrification System 305 MHD Clean Container Import*

4. Functions

The HV System 305 will perform the following functions:

Instruments and Controls:

- Prevent personnel access door in import tunnel from opening when radiation/contamination exceeds limits.
- Warn personnel of radiation/contamination hazard in vicinity of import tunnel.
- Prevent simultaneous opening of container handling cave hatch and import hatch.
- Prevent dropping an empty container from the container import truck bay delivery crane or the import bulge monorail.

Container Import Truck Bay Crane and Import Bulge Monorail:

- Ability to withstand the design basis seismic event without load drop.
- Ability to hold load on power failure.
- Ability to hold load in any motor or control fire to prevent rope mechanical damage or overstressing or hoist failure leading to load drop.
- Prevent horizontal impact of crane and/or load with other equipment during normal load handling leading to a challenge in the confinement systems.

Import Tunnel Bogie:

- Prevent horizontal impact with other equipment.

Grapple:

- Prevent inadvertent release of container

Others:

- Remove container shipping crate from truck.

- Lift horizontal container from shipping container. Containers are horizontally positioned in the shipping container. Individual horizontal containers are lifted off of the shipping container and placed on inspection/rotation table.

- Unwrap container. This is required before container is introduced into the container handling cave. The container has a protective cover to protect it from dirt or contact with carbon steel during shipping. Due to the incompatibility with radiation and heat, the cover will not be used to protect the container from contamination in the container handling cave and must be removed prior to introduction.

- Rotate container to vertical position. This is required before introduction into container handling cave. All process sequences are designed to handle a vertical container. The container is delivered in the horizontal position and must be rotated prior to introduction.

- Inspect the container for damage due to shipping. This is required to confirm the condition of the container prior to introduction into the container handling cave. The inspection is only to verify that the container was not damaged in transport. Any container qualifying inspections are not in the scope of HV System 305.

- Log container ID into the Waste Tracking System (WTS).

- Transport container to import bulge. The vertical container is removed from rotation table and placed in the import buffer store rack.

- Provide buffer store.

- Provide contamination control barrier for C1 to C2 interface. Required to maintain HVAC cascading principle.

- Provide contamination control barrier for C2 to C3 interface. Required to maintain HVAC cascading principle.

- Transport of container in C3 container import tunnel. Container is placed in import tunnel bogie to be transported to container handling cave.

- Provide contamination control barrier for C3 to C5 (import tunnel to handling cave). Required to maintain HVAC cascading principle.

5. Description

5.1. System Description

The sequence of operations and the equipment used for container import are briefly described as follows.

- The shipping containers will be unloaded from the transport truck (Figure 3).

- Receiving personnel inspect the container packaging for any obvious shipping damage that may have occurred during transit.

- The containers will then be individually removed from the shipping container and then set on the container inspection/rotation table. The lid will be removed and both container and lid will be inspected for cleanliness and damage that may have occurred during transit. Then the container identification number and results of inspection are entered into the Waste Tracking System (WTS). The container will be identified and tracked through out its travel through the plant. The container will then be secured in position.

- The import bulge roller shutter door will be opened and the table will rotate the container into the vertical position.

- The lid will be replaced and the overhead monorail hoist and grapple will grab and support the container while being released from the table. The monorail lifts and transfers the container to the import bulge. The container will either be set in the import buffer racks or placed in the import bogie (Figure 4). When the container is transferred to the import tunnel, the sealed hatch is opened and the container is lowered into the import bogie below. The container ID will be logged in the WTS as being entered into the process.

- Once the container is loaded into the bogie, the grapple is released and withdrawn and the hatch is closed.

- The bogie is transferred to the container handling cave and locked in position. The container handling cave shielded hatch is then opened and the container handling cave crane (HV System 310) raises the container into the container handling cave. The hatch is closed and the container is taken to the container handling cave buffer store.

5.2. System Configuration, Architecture and Arrangement Location

System 305 equipment is located in the truck bay. An import bulge (see Figure 2) is located in the truck bay on the north wall and on the south side of the import tunnel. The bulge is at an elevated level preventing inadvertent movement of personnel or equipment between C1/C2 zones during container import. The container import tunnel (see Figure 4) is 66' long by 22' wide by 23' high. The tunnel is at the -16' elevation. The tunnel runs in the N-S direction perpendicular to the truck bay.

6. Interlock Requirements

Preliminary interlock features are indicated in this section. Instrumentation, alarms, controls, and or interlocks will be provided to indicate and/or prevent the following conditions:

- Prevent over travel of bogie off of rails
- Sealed hatch will be interlocked with the shielded hatch
- Personal access door to import tunnel will be interlocked with gamma monitors.
- Shielded hatch interlocked with roller shutter door preventing back flow of C3 air into truck bay.
- Prevent rotation/inspection table from rotating when roller shutter door is closed.
- The import tunnel sealed door is interlocked with the import hatch.

Figure 1. System 305 Boundaries

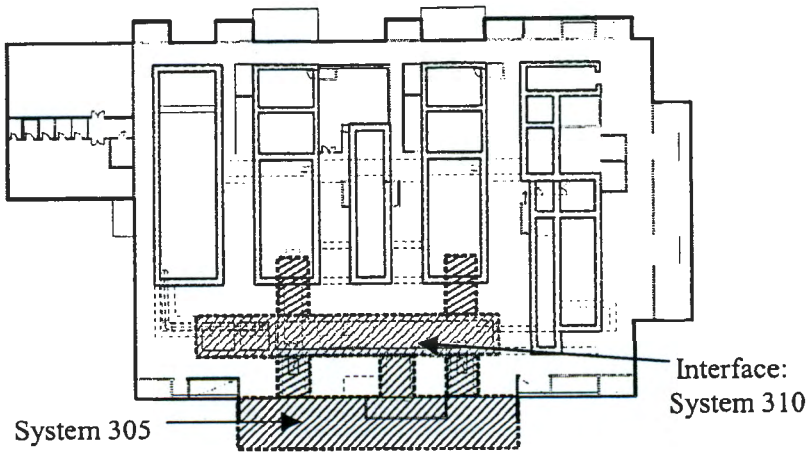

1 **Figure 2. System 305 Location**

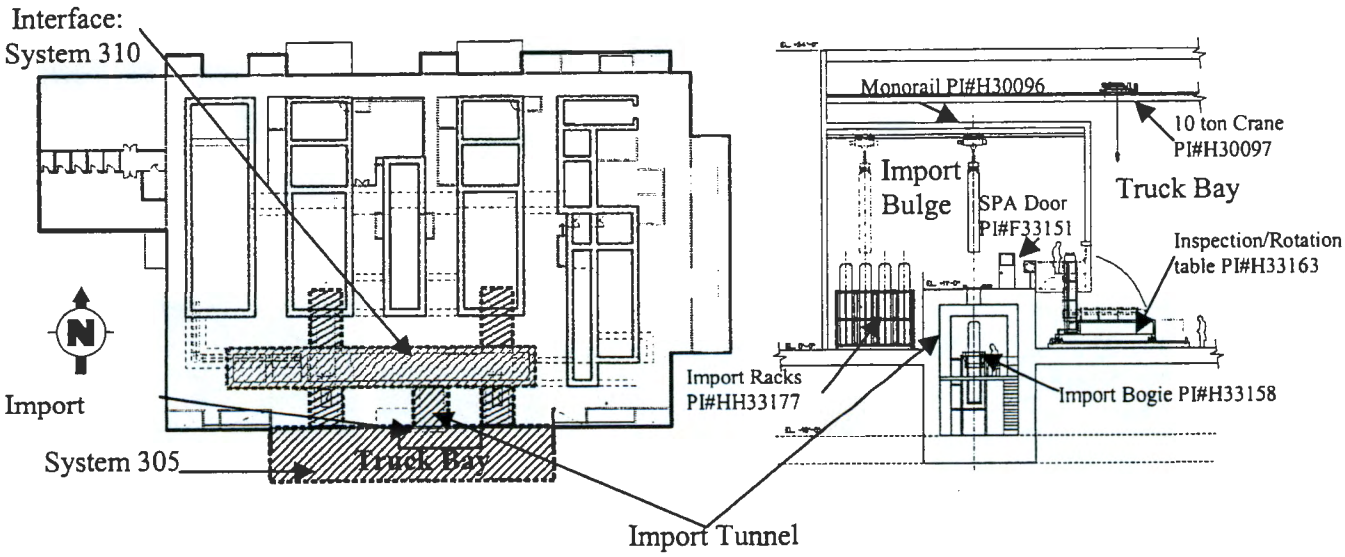

Figure 3. Shipping Container

Figure 4. Import Bogie

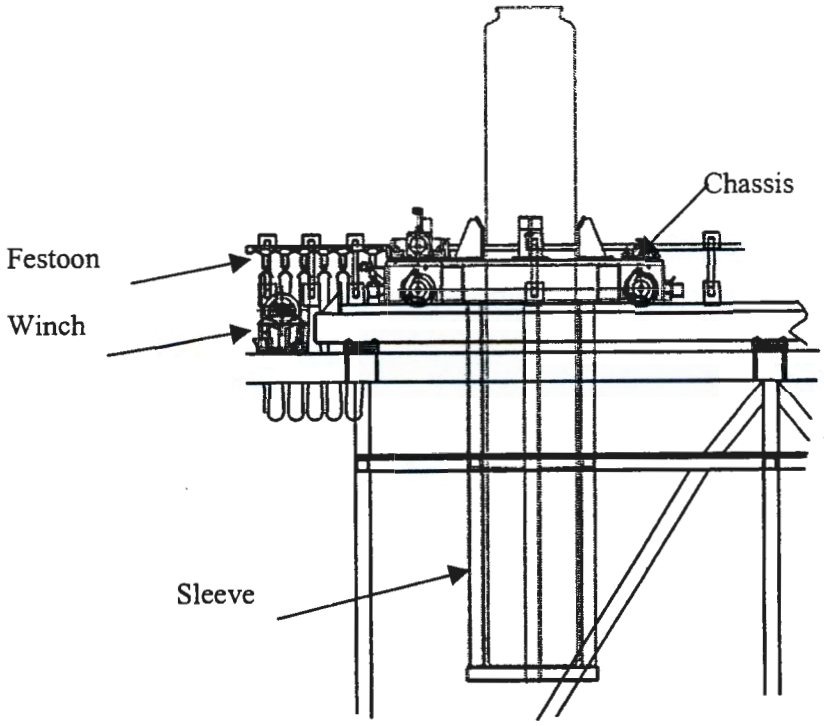

HV System 310: IHLW Container Handling and Buffer Store

1. Introduction

The purpose of the High Level Waste (HLW) Vitrification (HV) System 310, Container (canister) Handling and Buffer Store, is to transport empty and filled containers to interfacing process systems, provide cooling buffer storage prior to welding and lag storage prior to container decontamination (HV System 330).

2. Scope

HV System 310 will provide the equipment, controls and interlocks required for handling the container within the container handling cave and the associated functions. Areas in the handling cave supported by this system include the cooling stations, the crane decontamination and maintenance and the weld/rework station. These areas are located on the south side of the plant as shown in Figure 1. Other areas in the plant supported by this system include the container transfer interface for import, the container transfer interface for the pour tunnel and the container transfer interface for decontamination and monitoring. HV System 310's design will encompass all aspects both directly and indirectly related to the container-handling cave within the scope, such as equipment transfer, solid waste transport, maintenance and repair and operations.

3. Applicable Document

DWG-W375HV-M0095, *HLW Vitrification System 310 MHD Level 1 Product Container Handling*

4. Functions

The primary function of HV System 310 - Container Handling, is the transport of the container to required locations within the plant which include the transfer tunnel, the welding station and decontamination area (Figure 2). Secondary functions of HV System 310 include the ability to stage empty containers for filling and stage full containers for cooling, provide 40 total positions for lag storage of containers in case of decontamination station and buffer storage for welding station failure, crane decontamination and maintenance and export of consumables. The areas in the facility supported by this system includes, the cooling stations, the crane decontamination and maintenance areas, the transfer interface for the welding/rework station, the container transfer interface for decontamination and monitoring and transfer interface to the melter pour tunnels.

Other functions that will be performed by HV System 310 are as follows:

- Provide remote viewing capabilities as well as shielded viewing capabilities
- Function in the radioactive environment
- Facilitate remote maintenance and replacement of in-cave equipment

5. Description

5.1. System Description

The primary function of HV System 310 is the transport of the IHLW container to required locations within the container handling cave. Secondary functions of HV System 310 include the ability to stage empty containers for filling, stage full containers for cooling, buffer storage for container decontamination or welding station failure, crane decontamination and maintenance, and the export of consumables. The areas in the facility supported by this system includes, the cooling stations, the crane decontamination and maintenance areas, the transfer interface for the welding/rework station, the container transfer interface for decontamination and monitoring and transfer interface to the melter pour tunnels.

5.2. System Configuration, Architecture and Arrangement Location

HV System 310 consists of the container handling cave, the crane decontamination area and the crane maintenance area. The container handling cave is approximately 18' wide by 140' long by 48' high located on the south side of the HLW plant. The floor of the container handling cave is at the –3-ft elevation. The container-handling cave is classified as a C5 area; therefore, all activities in the handling cave will be handled remotely. This will be accomplished with viewing windows and overhead cranes. Windows are strategically located above the transfer hatches for viewing the containers as they are raised and lowered. The crane decontamination area is located on the west end of the container handling cave. The decontamination area is approximately 18' long by 18' wide and 39' high. The decontamination area is classified as a C5/C3 area. The crane maintenance area is located west of the crane decontamination area. The crane maintenance area is approximately 21.5' long by 18' wide by 39' high. The crane maintenance area is classified as a C3 area. Both the crane decontamination and maintenance areas are at the 20-ft elevation.

6. Operations

6.1. Normal Operation

The Waste Tracking System (WTS) tracks the container ID and container activities throughout the plant. The container ID number will be tracked at each location within HV System 310.

The clean container is transferred from HV System 305 - Clean Container Import to HV System 310 through the container import tunnel hatch. The hatch is opened and the handling cave crane raises the container into the container handling cave. The hatch is closed and the container is taken to the buffer store racks.

When a container is required for filling, it is taken out of the buffer rack using the 5 ton container handling cave crane and transferred above the appropriate pour tunnel hatch. The hatch is opened and the container is lowered into the pour tunnel bogie below. The grapple is released and raised and the hatch is closed.

After the container is filled with glass the bogie returns to the hatch access to the container handling cave and the hatch is opened with HV Systems 315/316. The crane is located above the hatch and it transfers the filled container to the buffer/cooling rack where it is allowed to cool. After cooling, a crane transfers the container to HV System 320 – Product Container Weld, Glass Sampling, and Rework. The container

is lowered into the welding station table and the grapple released from the container. After the welding station operations, the crane transfers the container back to the HV System 310 buffer/cooling racks or to the decontamination system rinse bogie, via the decontamination hatch.

6.2. Point of System Operations

PLCs will be used to control the mechanical handling. These will be considered part of the Integrated Control System (ICS). These networks will contain a number of operator interfaces for cave face control or local control of mechanical handling equipment. It will provide the following functions in those areas:

- Sequence control of discrete mechanical handling equipment
- Trips and interlocks
- Control of process functions integral to the mechanical handling system
- Tracking of containers and containers

The 5 ton overhead crane in the container handling cave will be operated from a control room and have the ability to be operated locally at the weld station window and the transfer tunnel hatch windows with control panels. Visibility in the cave will be accomplished with shielded windows and/or with in-cave cameras and out cave monitors.

7. Safety and Interlock Requirements

Preliminary safety and interlock requirements are indicated in this section. Instrumentation, alarms, controls, and or interlocks will be provided to indicate and/or prevent the following conditions:

- The crane decontamination shield door is interlocked with the crane maintenance shield door to prevent both doors being open concurrently.

- The SPA door in the crane maintenance area is interlocked with the crane maintenance shield door. The SPA door is also interlocked with a gamma monitor to prevent opening when a dose is present.

- Process cranes are interlocked such that their hoists can only be lowered at designated positions in automatic mode, and if over hatches, when signal confirms door is in open position.

- Process cranes are interlocked with the hoists such that the cranes can only move with the grapple at transport height.

- The process cranes are interlocked such that they cannot attempt to enter the crane decontamination area unless the crane decontamination shield door is open.

Figure 1. System 310 Boundaries

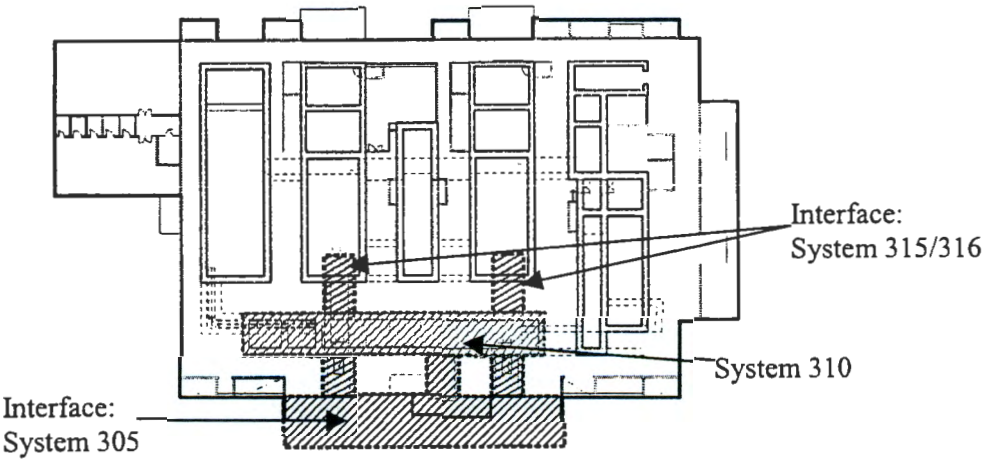

Figure 2. System 310 Location

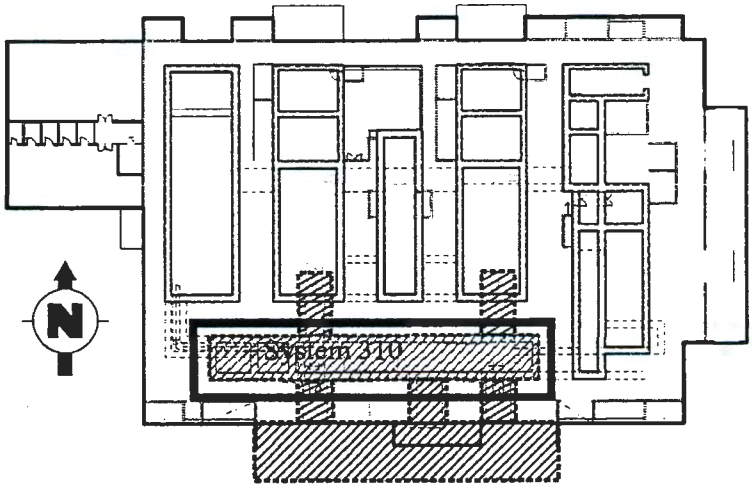

HV System 315: Pour Tunnel

1. Introduction

The purpose of High Level Waste (HLW) Vitrification (HV) Systems 315 and 316, Pour Tunnels, is to transport IHLW containers to and from the melter cave (HV Systems 241 and 242) for filling with HLW glass via the HLW melter and pour spout (HV Systems 211 and 212). A secondary function of HV Systems 315/316 is to provide a transfer route for secondary waste arisings from HV Systems 315, 316, 310, 320, and potentially 330 to secondary waste packaging (HV System 440) via the melter cave (HV System 241/242).

2. Scope

HV Systems 315/316 will provide the equipment, controls, and interlocks required for handling the HLW container within the pour tunnels and the associated functions.

HV System 315, Pour Tunnel 1, interfaces with the container handling cave (HV System 310) and transfers the container to and from the container handling cave to the Melter 1 cave (HV System 241) for connection to the pour spout attached to Melter 1 (HV System 211). Pour Tunnel 1 is utilized in Phase 1 processing.

HV System 316, Pour Tunnel 2, interfaces with the container handling cave (HV System 310) and transfers the container to and from the container handling cave to the Melter 2 cave (HV System 242) for connection to the pour spout attached to Melter 2 (HV System 212). HV will not be used during Phase 1 processing and is provided primarily to support Phase 2 (enhanced) throughput. Pour Tunnel 2 System 316 will have minimum equipment installed during Phase 1 processing.

In terms of system description, this document focuses primarily on HV System 315. The equipment for HV System 316 will be identical to that provided for HV System 315, but will be installed later to support Phase 2 processing. Encasts will be installed in the pour tunnel to minimize installation work in the "active" facility. See Figure 1 for location of HV Systems 315/316.

3. Applicable Document

DWG-W375HV-M00594, *HLW Vitrification System 315/316 MHD Level 1 Pour Tunnel.*

4. Functions

The main function of HV Systems 315/316 is to transport the container to and from the container handling cave to the melter pour station via a lid/de-lid station. The secondary functions of HV Systems 315/316 are to provide a transfer route for secondary solid waste and equipment for bogie decontamination and maintenance.

The following are functions to prevent/mitigate potential hazards.

4.1. Instruments and Controls

- Prevent bogie shield door opening when radiation exceeds limits.
- Warn personnel of radiation hazard in vicinity of the bogie maintenance area.
- Prevent opening of the shielded personal access door for the bogie maintenance area when the bogie shield maintenance door is open.

4.2. Shielding and Confinement

- Prevent unplanned/uncontrolled removal of through-wall shield plug/drive.
- Maintain pressure differential and flow of air from the personnel access area into the cave under confinement breach conditions thus minimizing dose uptake to worker.
- Provide adequate shielding.
- Prevent inadvertent entry to and prompting of evacuation from high dose bogie maintenance areas.
- Limit operator exposure during hands on maintenance operations.

4.3. Through-Wall Drives

- Prevent loss of confinement due to drive seal failure.
- Detect and alarm leaks to aid in the protection of the worker.

4.4. In-Cave Bogie

- Prevent misalignment of the container with the melter pour spout, thus preventing a glass spill in the tunnel/cave resulting in a challenge to the ventilation systems and decontamination equipment.
- Prevent horizontal impact with shield doors or other equipment.
- Prevent bogie from entering bogie maintenance with bogie sleeve, and therefore a potentially filled container, on bogie.
- Prevent bogie from moving when pour spout is engaged to prevent damage to pour spout and potential spilling of glass that will result in a challenge to the ventilation system and decontamination equipment.

5. Safety and Interlock Requirements

The bogie drive unit will be interlocked to prevent operation should the cable reeling drum fail to rotate.

The cable reeling drum drive will be interlocked to prevent its operation when the bogie drive clutch is not energized.

Bogie maintenance shield door and bogie are interlocked with the container sleeve detector plug to prevent the bogie from entering the bogie maintenance area with the sleeve in place which will damage the south wall of the pour tunnel or the shield door causing a breach in confinement.

6. System Description

The functions of HV Systems 315/316 are to transport the container from the container-handling cave to the melter pour station, remove container lid before pouring and replace the lid after pouring, provide a transfer route for solid waste, and bogie decontamination and maintenance. The areas in the facility supported by this system include the pour tunnels, the bogie decontamination and maintenance areas, the pour tunnel/container handling cave interface and the pour tunnel/melter cave interface.

HV Systems 315/316 consist of the pour tunnel and the bogie decontamination and maintenance areas. The pour tunnels are located south of the melter caves. The tunnels run in the north-south direction and are approximately 14 feet wide by 42 feet long. The bogie and rails extend further into the melter cave under the melter allowing the standby bogie to be positioned under the melter when the process bogie is in the pour position. The rails will be isolated from the melter cave with stainless steel contamination control barriers. The bogie decontamination areas are located south of the melter caves.

7. Safety Features

Instrumentation, alarms, controls and/or interlocks will be provided to prevent or mitigate the following list:

- The bogie maintenance shield door is interlocked with the shielded personnel access door to ensure that personnel do not enter the bogie maintenance area when the bogie maintenance shield door is open.

- Radiation monitoring equipment is interlocked to the shielded personnel access door to ensure no personnel are able to access the maintenance area if a radiation/contamination source above prescribed limits is present.

- The bogie sleeve detector is interlocked to the bogie maintenance shield door to ensure the sleeve is removed from the bogie before the bogie enters the maintenance area.

- Container lidding device is interlocked with the melter glass discharge system to ensure that the container lid has been removed before glass filling can take place.

- Pour spout has position sensors to check that correct alignment has been made with the container and that the lid is not present before permission is given to commence fill cycle.

- Bogie location bolts are interlocked with melter system to ensure bogie and container are correctly positioned before fill cycle can commence.

- Decontamination equipment is provided in pour tunnel to facilitate decontamination of the bogie and the tunnel area to minimize dose to maintenance personnel and prevent background radiation build-up.

- Glass catch tray system is provided below pour spout and bogie system to enable retrieval of spilled glass (from a failure of pour spout connection or potential overfill).

- Standby bogie with container provides protection against a spontaneous glass discharge for the pour station in-between container fill sequences.

- Cable brush assembly on bogie limits migration of contamination from the pour tunnel area into the bogie maintenance area.

- Remote maintenance features and modular design provided on the bogie and equipment for controlled hands on maintenance.

- Drive systems typically through-wall to minimize dose uptake to maintenance personnel.

- Cascade ventilation system from areas of least contamination potential to areas of high contamination potential.

- Solid waste routes limit hands-on contact with radioactive solid waste.

- All equipment can be recovered remotely.

- Sumps to collect and confine liquid waste

- Lining for confinement

- Ventilation control

8. Operations

8.1. Normal Operation

When a container is required for filling, it is taken out of the buffer rack (HV System 310) in the container handling cave using the container handling cave crane (HV System 310) and transferred above the appropriate pour tunnel hatch. The hatch is opened and the container handling cave crane loads the empty container into the transfer bogie. The grapple is released and raised and the hatch is closed. The bogie is unlocked and travels north to the lidding device. At the lidding device, the transfer bogie moves up to the standby bogie and latches onto it. The transfer bogie is then locked in position and the lid is removed.

The transfer and standby bogies are unlocked and the standby bogie is shunted along the track until the transfer bogie is in position under the pour spout. The transfer bogie is then locked in position, the pour spout is lowered onto the container flange, and the container is filled with glass. Container filling is controlled and monitored by the container level detection system (HV Systems 211/212)

After completion of filling, the container remains at the pour spout for approximately one hour to allow a "skin" to form over the glass which provides a seal to prevent additional off-gassing. The pour spout is then retracted and the transfer bogie is unlocked, moved back to the lidding device, and locked into position. This sequence also moves the stand-by bogie back under the pour spout.

The lid is replaced and the filled container is allowed to cool for an additional 8 hours at the lidding position. The transfer bogie is then unlocked from the standby bogie and moved south in the pour tunnel until it is beneath the container handling cave hatch, where it is locked in position. The hatch is opened, the container handling cave crane removes the full container, and the hatch is closed. The filled container is then cooled in the System 310 buffer/cooling racks in preparation for welding the lid in place by HV System 320.

8.2. Maintenance Provisions

- Window and MSMs provided for each bogie in the maintenance bay
- Low activity solid waste can be routed through the sub-changes
- Dedicated hoist provided in pour tunnel maintenance bays
- A sub-change room and an access door are provided for bogie maintenance.
- Separate maintenance area provided for each pair of melter bogies
- Access hatches provided for maintenance bay MSM removal
- Access hatch provided in roof of maintenance bay

Figure 1. Systems 315/316 Location

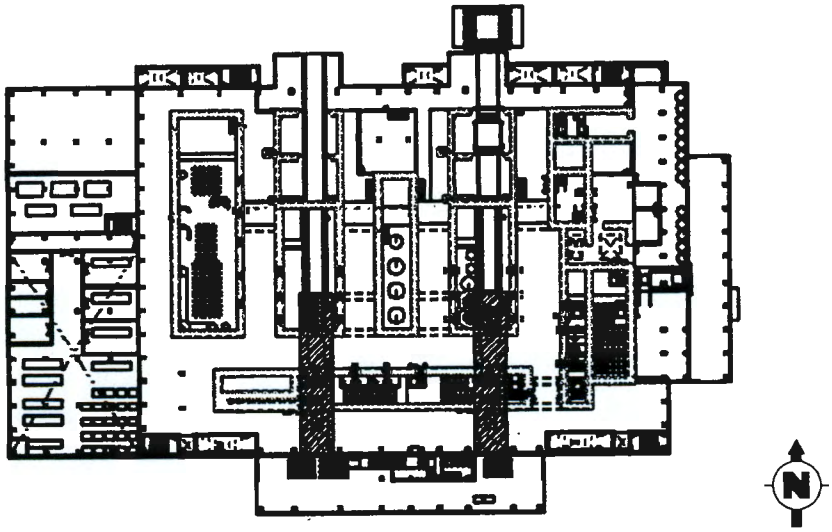

essentially a high efficiency demister that has a removal efficiency of approximately 99% for aerosols down to the sub-micron size. As the offgas passes through the HEME, the liquid droplets and other aerosols within the offgas interact with HEME filaments. As the aerosols contact the filaments they adhere to the filaments surface by surface tension. As the droplets agglomerate and grow, they eventually acquire enough mass to fall by gravity to the bottom of the unit, thus overriding the original surface tension, friction with the filaments, and the gas velocity. These collected droplets are assumed to contain the majority of the offgas's radioactivity and will be collected in the bottom of the HEME. The collected condensate will gravity drain into the SBS Condensate Vessel. As the condensate flows down through the filter bed, a washing action is generated that will help wash collected solids from the filter elements. However, some solids may accumulate in the bed over time, causing the pressure drop across the filter to increase. When the pressure drop across the HEME reaches a predefined level, it will be taken offline and washed with process water to facilitate removal of accumulated solids. Insoluble solids are assumed to remain, however, and their accumulation will eventually lead to the entire replacement of the HEME filter bed. A figure of a typical HEME is shown in Figure 6.

3.3.1.5. High Efficiency Particulate Air Filters and Electric Heater

To provide high efficiency submicron removal, the offgas is first heated using an electric preheater to a temperature above the gas streams dew point and then passed through dual HEPA filters. Figure 7 shows the combined offgas flowing through a single HEPA bank. These HEPA filters provide particulate removal efficiency of 99.999%. When the differential pressure drop (or radiation level) across the filters becomes to high, they will be remotely changed out.

3.3.2. Standby HLW Melter Offgas Treatment System

The purpose of the HLW standby offgas system is to treat the melter offgas during high surge flow conditions (e.g. rapid steam generation). The standby system consists of an offgas duct (identical in size to the primary offgas duct) from the melter to the submerged bed scrubber and an isolation valve. During a melter surge (or potentially due to offgas duct pluggage), this valve will open rapidly, providing an alternative path for the melter offgas to flow. This standby offgas duct will extend to the bottom of the SBS packed bed, identical to the primary duct. A maintenance bypass will also be installed (shown in Figure 2), allowing the melter offgas to bypass the SBS and the WESP. This bypass would only be used after the HLW melter has been idled and the cold cap eliminated.

3.3.3. Secondary Offgas Treatment System

The combined HLW offgas stream is discharged for treatment to the HLW secondary offgas treatment system. This system further cools the combined offgas stream to lower the water loading, partially removed acid gases, remove gaseous radionuclide species of carbon, hydrogen, and iodine, and also destroys volatile organic compounds. All condensate generated by the secondary offgas system is collected in the HLW Low Activity Waste Vessel (V35001).

3.3.3.1. Caustic Scrubber

The discharge from the HLW primary HEPAs is further treated by the HLW offgas caustic scrubber. Figure 8 shows a typical packed scrubbing column. The principle purpose of the caustic scrubber is the removal iodine-129. Quantities of acid gases (primarily NO_x) and radioactive hydrogen and carbon will also removed by the column. Absorbed carbon dioxide will be neutralized to sodium bicarbonate.

The contaminated offgas stream will enter the bottom side of the scrubber and flows upward through a packed bed. The offgas flows counter-current to the scrubbing liquid, which is introduced through a

distributor at the top of the packed section of the column and trickles downward through the packing media. Contaminates in the offgas stream are absorbed into the scrubbing liquid through interaction of the gas, liquid, and packing media. The cleaned offgas is passed through a mist eliminator to minimize droplet carryover before being discharged from the column. The discharged offgas will be saturated with water vapor and assumed to be at thermal equilibrium with the recirculation liquid. The scrubbing liquid passes downward through the packing bed and falls into the recirculation/collection vessel at the bottom of the unit. This liquid is recirculated to the top of the column using recirculation pumps.

The scrubbing solution will be cooled by the placement of cooling coils in the recirculation vessel. Chilled water will be used as the cooling medium at a maximum inlet temperature of 10°C. A sodium hydroxide solution will be metered into the vessel to neutralize the collected acid gases in the recirculated scrubbing solution and facilitate contaminate absorption. Process water may also be added to the vessel (as needed) to dilute scrubbing solution and prevent buildup of contaminate salts (i.e., carbonates, nitrates, etc.). The recirculation vessel will be periodically purged to the HLW vitrification low activity waste collection vessel.

3.3.3.2. Organic Thermal Oxidizer Unit

To remove residual VOCs in the HLW offgas stream, a thermal catalytic oxidizer unit will be employed (Figure 9). This unit allows the oxidation of VOC compounds at a relatively low temperature of ~300 °C using a platinum metal catalyst. The organic compounds are converted to carbon dioxide and water vapor.

The thermal oxidizer unit is composed of three components, a heat recovery exchanger, an electric heater, and the thermal catalyst bed. The electric heater is employed to heat the column feed to the desired oxidation temperature. To help conserve energy, the hot exhaust from the unit is used to preheat the feed in an energy recovery exchanger, reducing the electric heater's load. This also helps cool the column exhaust. It is expected that over time the oxidization catalyst will lose effectiveness and will require replacement. The catalyst bed will therefore be designed for the manual removal and replacement when required or after a predetermined life span.

4. Functions

This section outlines the safety and non-safety functions for each of the HLW offgas treatment systems. The overall system function is to protect the public, environment, and operating staff from radionuclide and chemical exposure. This overall function is accomplished as follows:

- Remove sufficient radioactive aerosols from the combined melter and ventilation gases for release to the building ventilation system.

- Treat the combined primary (melter) and ventilation gases so that it complies with release requirements after passing through the building ventilation system.

4.1. Primary HLW Melter Offgas Treatment System

- Provide sufficient radionuclide aerosols removal from the melter offgas to permit safe contact maintenance of the secondary offgas treatment system.

- Control melter pressure to prevent radionuclide release to the melter cell and non-contaminated areas.

- Cool the HLW melter offgas to permit subsequent treatment.

4.1.1. Film Cooler

- Cool the melter offgas to permit downstream equipment to function properly for contaminant removal.

- Cool the melter offgas stream to prevent solids build-up within the offgas piping system.

4.1.2. Melter Pressure Control System

- Control the melter plenum pressure through the addition of control air into the offgas stream after the film cooler.

4.1.3. Submerged Bed Scrubber

- Further cool the melter offgas stream so that downstream treatment units operate effectively.
- Remove entrained aerosols.

4.1.4. SBS Condensate Collection Vessel

- Collect condensate generated by the SBS.
- Collect condensate and wash solutions generated by the WESP.
- Collect condensate and wash solutions generated by the HEME.

4.1.5. Wet Electrostatic Precipitator

- Remove sufficient radioactive aerosols to permit downstream equipment to function properly for subsequent contaminant removal.

- Protect the secondary offgas system from contamination so that the secondary offgas equipment may be safely contact maintained.

4.1.6. High Efficiency Mist Eliminator

- Provide further particulate removal to minimize HEPA filter replacement frequency.
- Protect the HEPA filters from periodic melter surges.
- Provide a backup to the WESP for aerosol removal.
- Remove entrained particulates from the vessel ventilation offgas.

4.1.7. High Efficiency Particulate Air Filter

- Perform final radioactive particulate removal before discharging the combined melter and vessel ventilation offgas to the secondary offgas treatment system.

4.2. Standby HLW Melter Offgas Treatment System

- Provide an alternative pathway for offgas venting in case of melter over pressurization, which could results in spreading radioactive material to the cell and possibly operating areas.

- Protect structural integrity of the melter

4.3. Vessel Ventilation Offgas System

- Prevent migration of radionuclides and noxious gases into the process cells and potentially operating areas.

- Maintain slight vacuum in all process vessels (i.e., breakpots, feed tanks, etc.) to prevent pressurization (or excessive vacuum) and potential impairment of structural integrity.

4.4. Secondary Offgas Treatment System

- Treat the combined HLW vitrification offgas for removal of gaseous radionuclides and reduction of acid gas contaminates so that it can be safely released for treatment in the building ventilation system.

- Remove gaseous catalyst poisons such as SO_2.

4.4.1. Caustic Scrubber

- Removal of radioactive iodine

4.4.2. Energy Recovery Exchanger

- Recover heat from the VOC thermal oxidizer exhaust so that the electrical load on the electric heater is lessened.

4.4.3. VOC Thermal Oxidizer Electric Heater

- Heat the offgas to the required operating temperature of the VOC thermal catalytic oxidizer column.

4.4.4. VOC Thermal Oxidizer Column

- Removal of volatile organics from the HLW offgas stream.

5. Normal Operations

This section provides a description of the process control and indication sequences that will be employed for the overall HLW offgas treatment system and for individual treatment units.

5.1. Primary Pressure Control

There will be two pressure control systems within the HLW offgas system. Both of these systems will use controlled air inbleeds into the offgas stream to maintain pressure and flow control. The first system will use a controlled air inbleed into the offgas stream immediately after the melter film cooler to control the HLW melter plenum pressure. By varying the flow of control air into the offgas stream, the pressure depression within the melter plenum can be regulated. If there were an offgas flow surge, the melter

pressure would rise, causing the control valve to constrict and lower the amount of control air being added to the offgas stream, thereby keeping a constant pressure in the melter.

The second controlled air inbleed will be located at the inlet to the HLW melter offgas extractor fans. The offgas flowrate generated by the combined primary and vessel ventilation systems will fluctuate. Because the offgas extractor fans are assumed to operate at a constant speed, they will require a constant inlet flowrate. This second air inbleed will provide this constant inlet flowrate. As with the melter pressure control inbleed, the extractor fan air inbleed will also fitted with a prefilter to prevent back contamination of the air supply system.

5.2. Stand-By Surge Pressure Control

During surge conditions, the standby offgas treatment system will control the melter's plenum pressure by providing an alternative path for melter offgas. The surge control system will be directly connected to the HLW melter. This line will have a continuous air inbleed to give a slight reverse airflow into the melter during normal melter operations. This reverse airflow prevents melter offgas from entering the standby line during normal operations to prevent line plugging.

6. Safety Interlock Requirements

Safety interlock requirements will be developed under WTP-ISM procedures.

Figure 1. Melter Offgas Generation

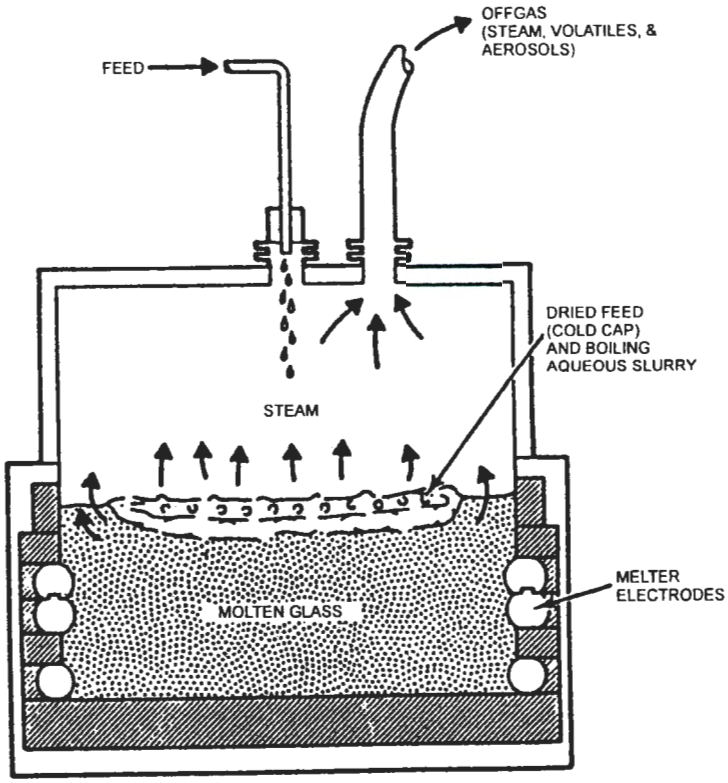

1 **Figure 2. HLW Offgas Block Flow Diagram**

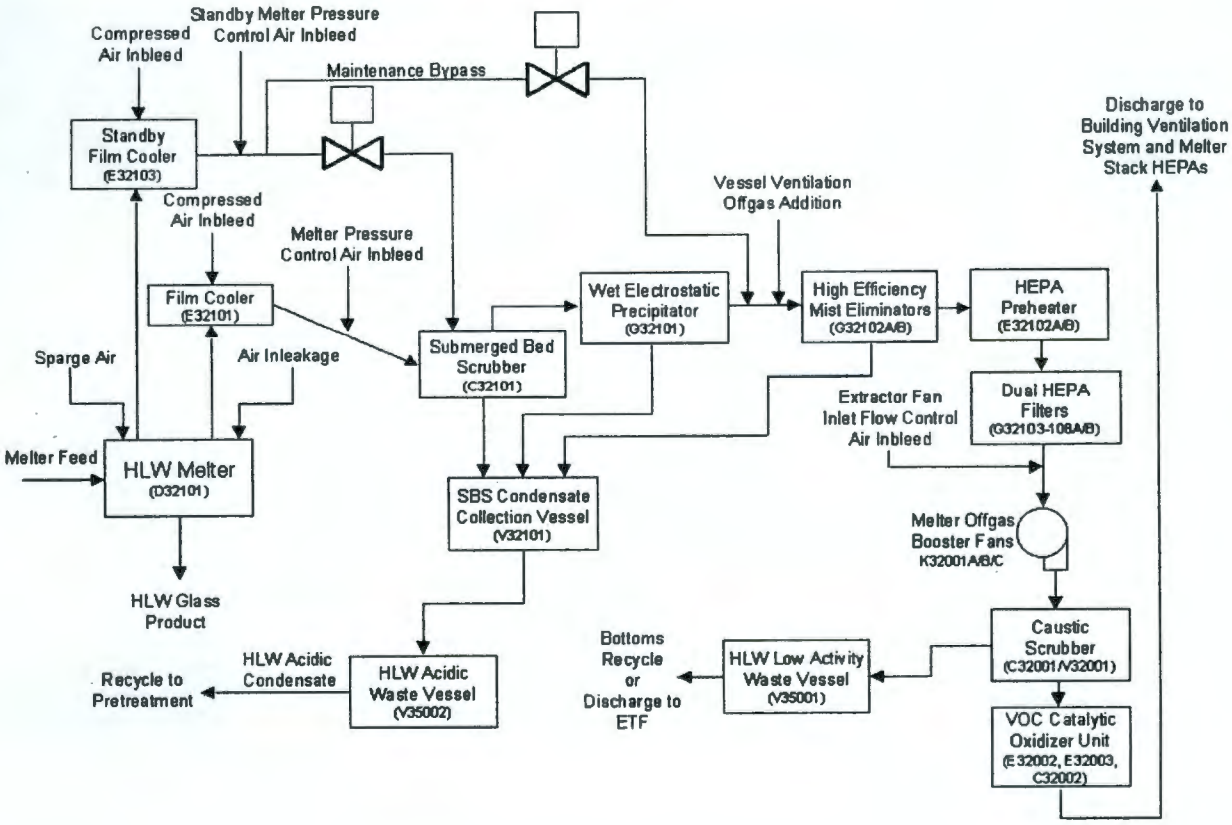

2

Figure 3. Vitrification Melter Offgas Film Cooler

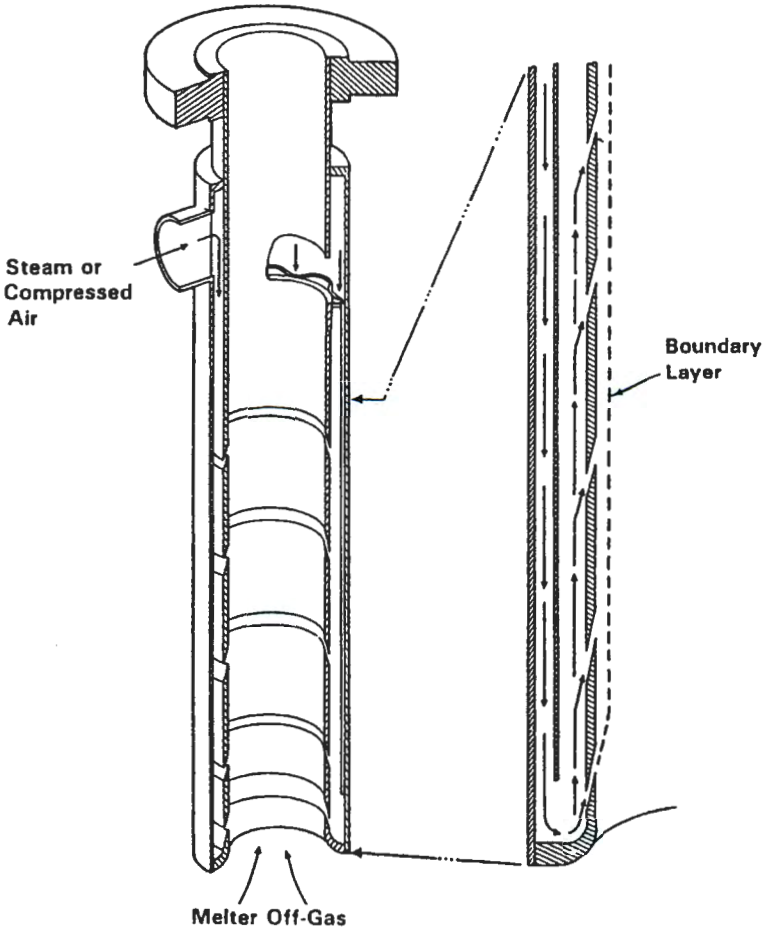

Figure 4. Submerged Bed Scrubber (Schematic)

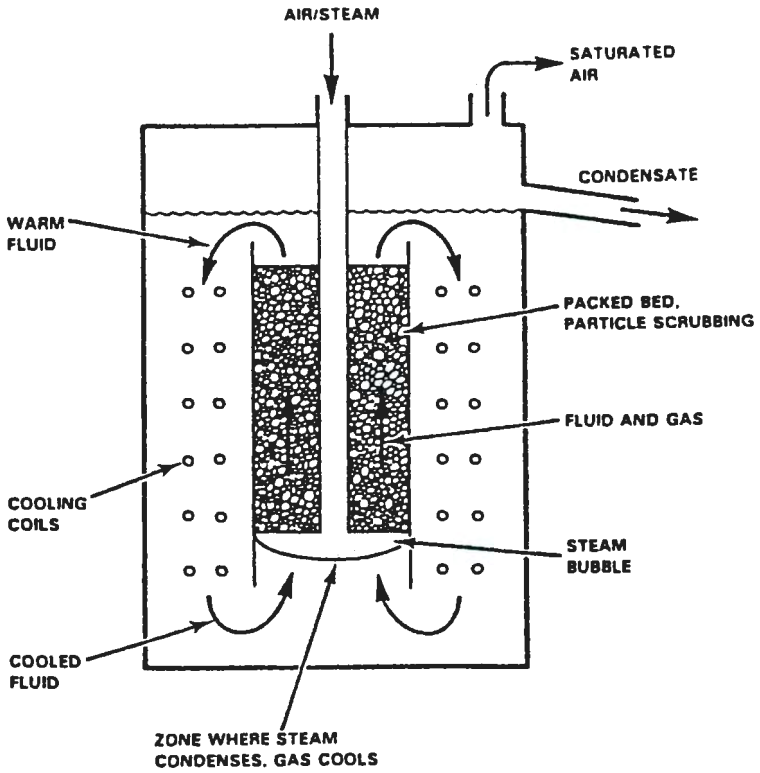

1 **Figure 5. Wet Electrostatic Precipitator**

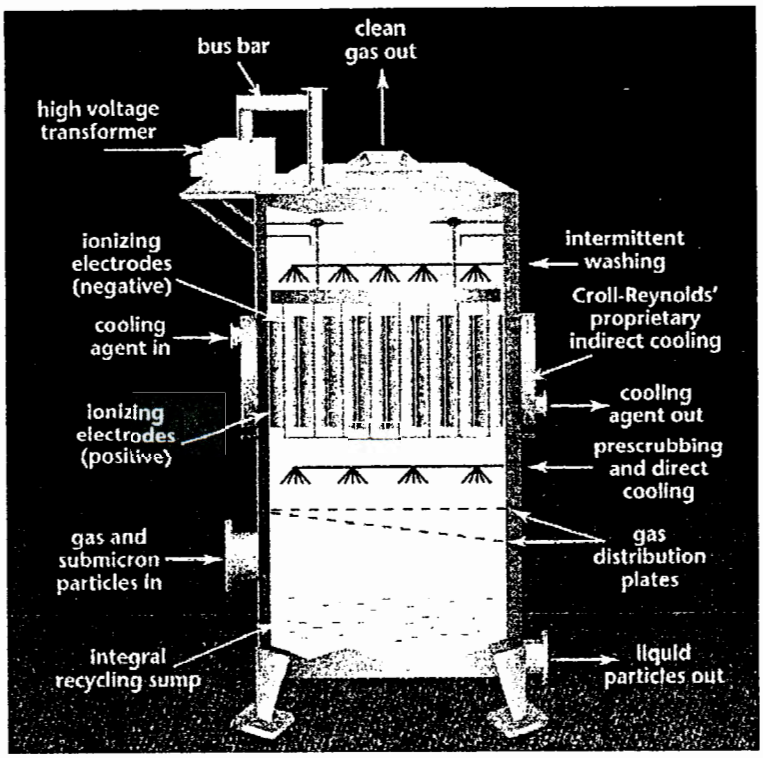

2

Figure 6. High Efficiency Mist Eliminator

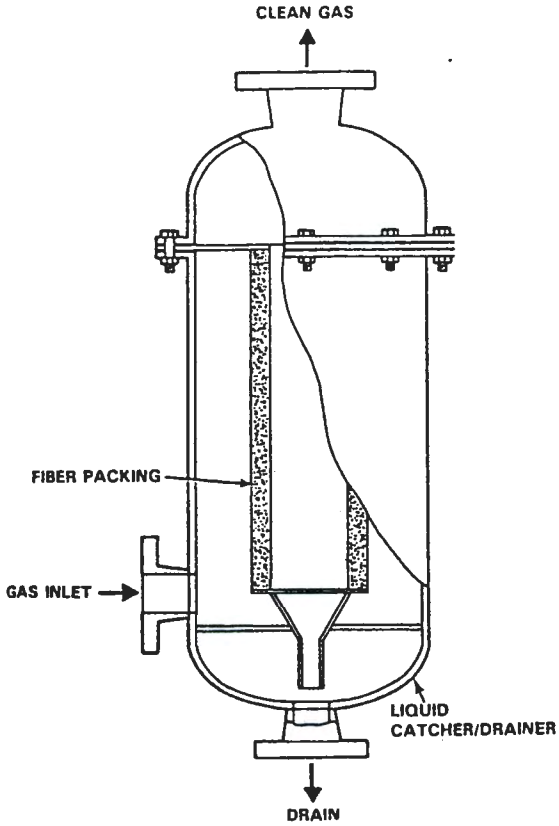

Figure 7. High Efficiency Particulate Air Filter System (Typical)

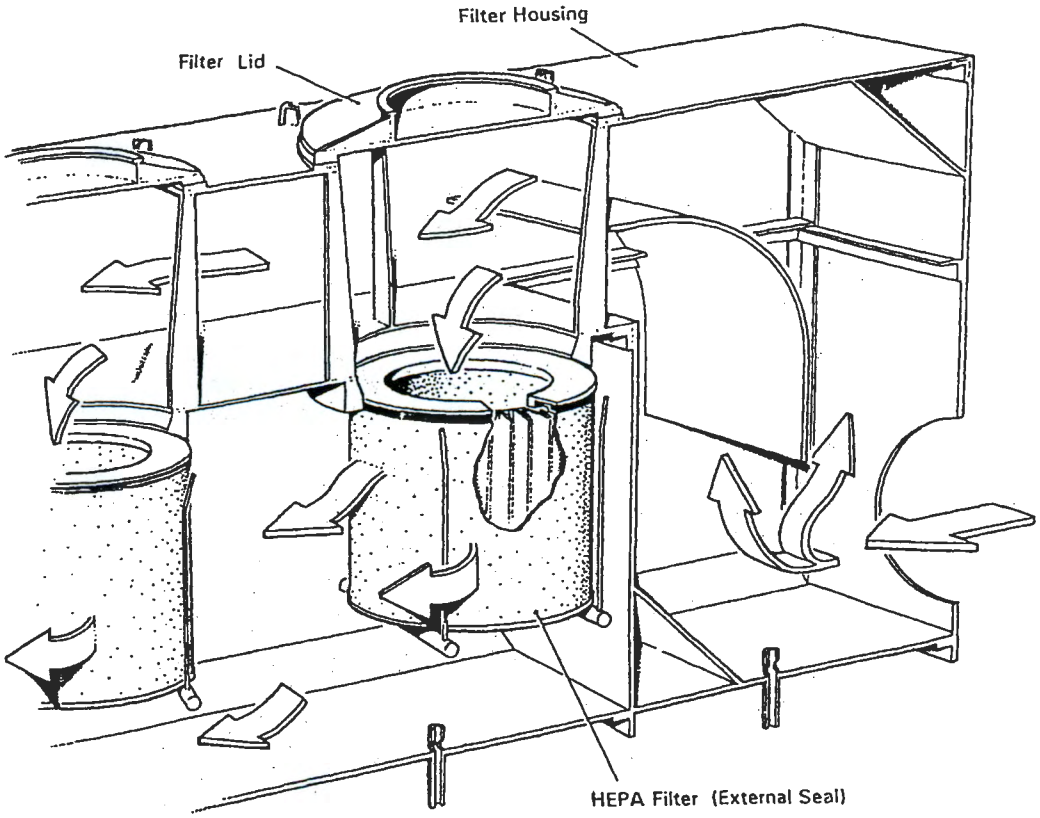

Figure 8. Packed Tower Scrubbing Column

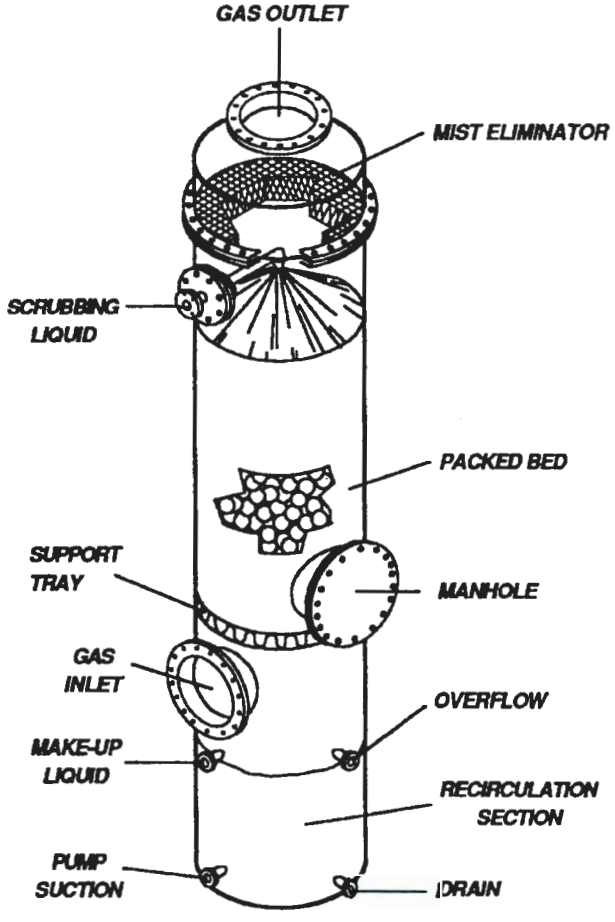

Figure 9. Thermal Catalytic Oxidizer Unit

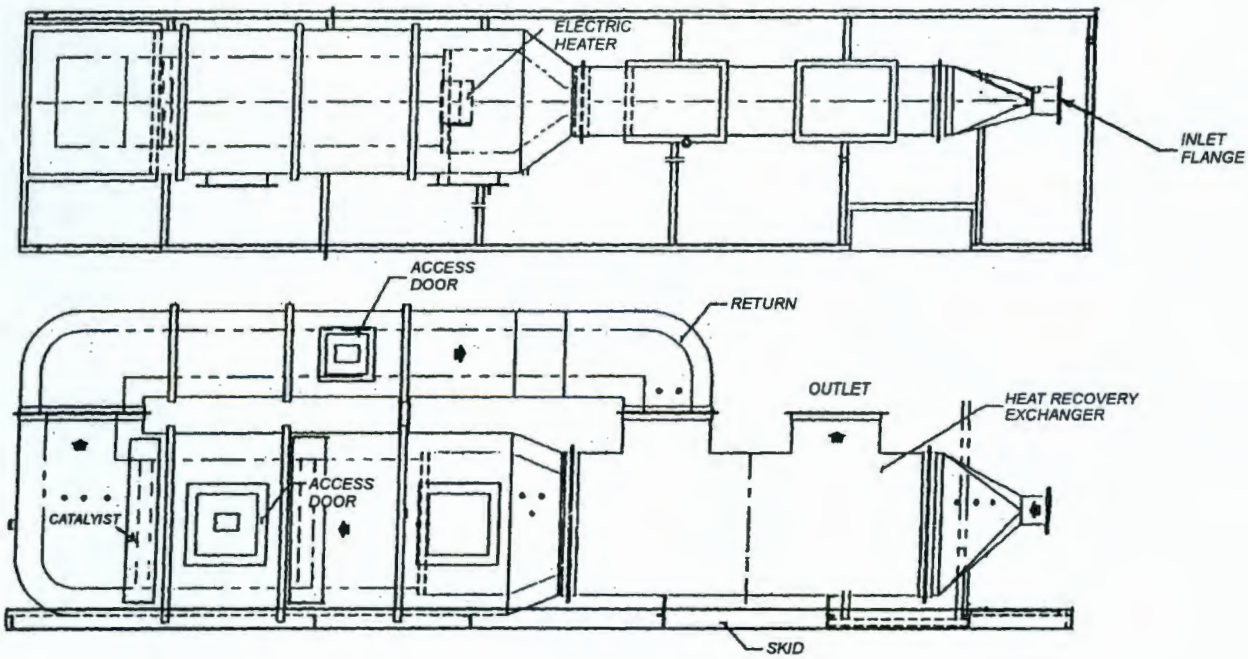

HV System 320: IHLW Container Weld, Glass Sampling, and Rework

1. Introduction

The primary purpose of high-level waste (HLW) vitrification (HV) System 320 is to weld the lid on an immobilized high-level waste (IHLW) container after it has been filled with glass and allowed to cool. This system will also be used to take glass samples for analysis, perform container inspections, and provide any necessary rework. The rework envisioned currently consists of lid weld repair, removal of glass from the glass pouring operation (System 211/212), or manual override of the mechanical sequence grapple (System 310).

2. Scope

System 320 will provide most of the major equipment, controls, and interlocks required to perform container lid welding, glass sampling, container inspections, rework, and associated functions. The location of HV System 320 is depicted in Figure 1. Overhead crane support, including container transfers, will be provided by System 310.

3. Description

3.1. Process Description

The sequence of operations and the equipment used for container lid welding, glass sampling, container inspection, and rework are briefly described as follows.

- A container is filled with glass, lidded, and transferred into the container handling cave where it is allowed to cool. An overhead crane (provided by System 310) then moves the container from the cooling rack to the System 320 welding table (see Figure 2). At this point, System 320 comes into the process sequence.

- The container is weighed using the load cell built into the crane and confirmed to be below the maximum allowable weight.

- The container is then lowered into a port in the welding table. While being lowered, cameras will inspect the outside of the container.

- Remove any glass on the container exterior. This glass will be removed using a pneumatic needle descaler manually operated with master slave manipulator (MSM). A vacuum system will be used capture the removed glass and prevent the spread of debris.

- The container is then checked to confirm that its temperature is within the allowable range for welding. This is done using a thermocouple built into the table.

- Remove the container lid. This is performed using a pneumatic lid lifter, also mounted on the welding station carriage. The lid lifter is moved over the container with the carriage, a vertical linear actuator then lowers a vacuum head onto the lid, and the lid is raised and captured by mechanical fingers.

- Measure the glass fill height. Moving the UT probe back over the unlidded container and measuring the distance from the probe to the glass surface performs this. The weld station programmable logic controller (PLC) will be able to calculate the glass fill height in the container by subtracting the distance to the lid from distance to the glass and comparing the result to preprogrammed knowledge of the inside dimensions of the container.

- Visually inspect inside of container to verify that it free of foreign debris. This inspection is performed using the welding inspection camera, which is a closed circuit television camera (CCTV).

- Take a glass sample from the container. This is performed using an MSM operated glass sampling tool which uses a vacuum to draw shards of glass from the top surface into a small cup. These shards are then transferred into sample vials. Sample vials are imported via a drop chute. The sample vials are transferred to the laboratory located in the pretreatment plant using a pneumatic transfer system.

- Inspect the lid and the upper flange of the container with a remote camera to verify that both are clean enough for welding. If necessary, a motorized rotary wire brush manually operated with MSMs will be used for cleaning.

- Place the clean lid back on the container using the lid lifter. Placement of the lid is the reverse sequence of removal described above.

- Welding is performed using an automated welder mounted on the same carriage as the UT and lid lifter. The welder is positioned over the container with the carriage and a vertical linear actuator will lower the welder onto the container. A machined chamfer on top of the container flange will aid proper alignment of the welder. In-cave inspection cameras will inspect these welds.

- Complete the weld, visually inspect, and confirm weld parameters were within the pre-qualified range. Confirmation of the weld parameters is performed by checking data recorded during the welding operation by the arc data recorder. This information will be downloaded to the Waste Tracking System.

- Perform weld rework as necessary. This may only require remelting of the weld if visual inspection was acceptable, but weld parameters went outside the allowable range. For weld defects, this may require weld metal removal using the flange conditioning tool and subsequent rewelding using filler material. Worst case repairs would require machining a flat surface on the container flange with the flange conditioning tool and welding on a secondary lid. Import of the secondary lid would be through a tool posting box. In-cave handling of the lid would be performed using MSMs.

- Confirm container temperature is below the maximum allowable for decontamination

- Transfer container to HV System 330 for decontamination using the HV System 310 overhead crane.

3.2. System Arrangement and Location

The container lid welding, glass sampling, container inspections, and rework will be performed in one of two welding tables located along one wall in the container handling cave (see Figure 2). Only one table will be set up with equipment initially, but the second table may be outfitted identical to the first table for increased throughput at a later date. Each table will be set next to a shield window that will be in place when the building is commissioned. The MSMs, through wall CCTV cameras, and through wall lights

will be commissioned as required. The facility will be equipped to add these items (MSMs, CCTV, and lights) when they are required for operations.

4. Operations

4.1. PLC Controlled Operations

The following operations are automated and unless noted are controlled by the PLC provided with the welder.

- Operation of the overhead crane for container transfers.
- Operation of the horizontal drive for the weld station carriage as necessary to position welder, UT probe, and lid lifter.
- Operation of UT probe and calculation of container length and glass fill height.
- Operation of the vacuum and vertical drive for the lid lifter to allow automation of lid placement/removal
- Operation of the welder including vertical drive and all associated movements within the welder as necessary to tack weld the lid in place and complete the final lid weld.

4.1.1. Position Sensors

Position sensors will provide feed back for location of the weld station carriage, vertical location of the welder, and vertical location of the lid lifter.

4.1.2. Interlocks

Instrumentation, alarms, controls, and/or interlocks will be provided to indicate and/or prevent the following conditions:

- Zone controls will be employed on the HV System 310 crane to prevent the container from impacting the welding station during container transfers. Interlock on crane will prevent crane from coming into position over container port in table unless the weld station carriage is positioned out of the way for this movement.
- Carriages will not move when any of the equipment mounted on the frame is deployed or in operation.

4.2. Manual Operations

The following operations are performed manually using the MSMs, shield windows, and CCTV as appropriate.

- Inspect exterior of container for glass. In-cave and/or through wall cameras will visually inspect the exterior of the container while it is being lowered into the welding table.

- Inspect interior of the container for foreign debris. This will be done with the weld inspection camera or the through wall cameras. The weld inspection camera will be mounted on an articulated arm and moved by an MSM.

- Clean container lid and flange. The cleaning will be done with a wire brush on a high speed motor and manipulated by an MSM.

- Visually inspect welds. The weld inspection camera will be mounted on an articulated arm and moved by an MSM.

- Remove glass samples. Operation of the glass sampling equipment will be performed using MSMs with control of the air supply for the vacuum taking place out-cave.

- Measure container temperature. Readout for thermocouple is out-cave and temperature will be recorded manually.

- Remove defective welds or machine container flange for secondary lid (if required). The flange conditioning tool is controlled manually from an ex-cave control console and will be placed manually using the HV System 310 overhead crane. Adjustments on the tool will be performed using MSMs.

- Import lids (primary or secondary), welding torch blocks or any other small consumables that may be imported in the Posting-Box.

Figure 1. HLW System 320 Location

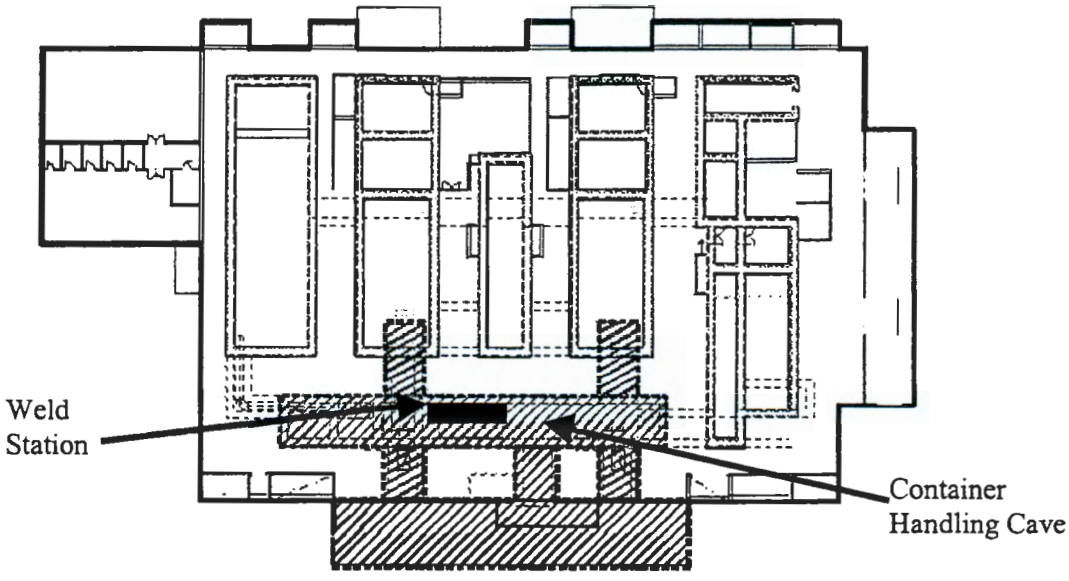

Figure 2. HV System 320 (View Looking North)

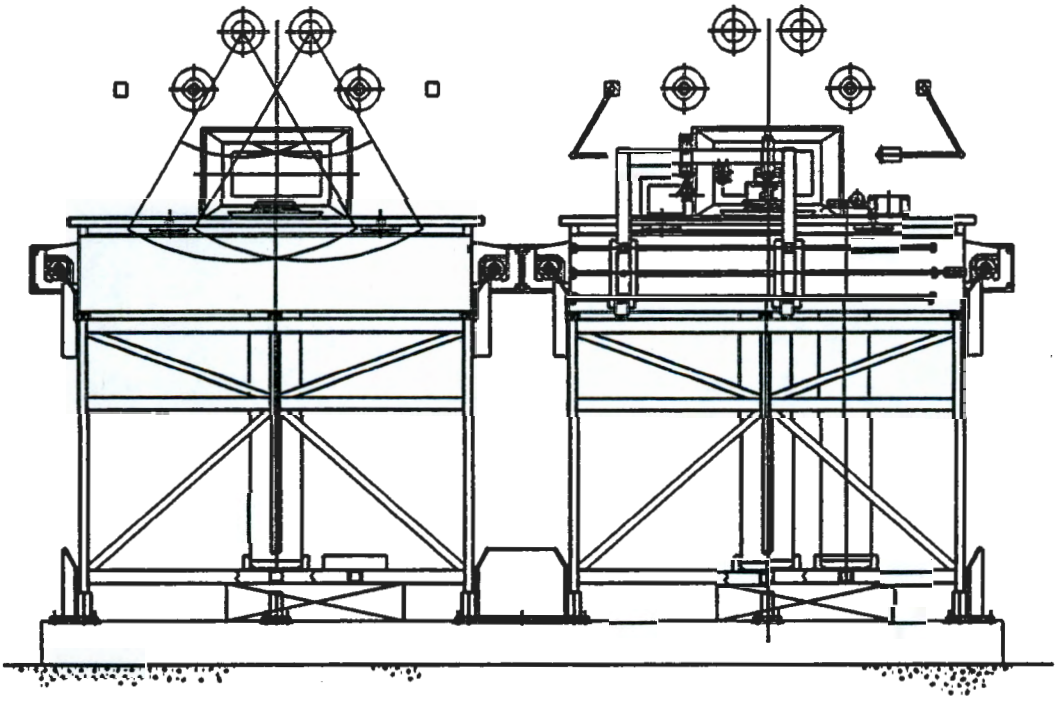

Floor is –3' datum

HV System 330: IHLW Container Decontamination, Swabbing, and Swab Monitoring

1. Introduction

The purpose of the high-level waste vitrification (HV) System 330, Container Decontamination, Swabbing, and Monitoring System, is to ensure that surface contamination is removed from immobilized high level waste (IHLW) containers prior to shipping.

2. Scope

The purpose of HV System 330 is to remove contamination from the filled and sealed container surface, perform surface swabbing, swab monitoring and packaging of used swabs for disposal. The HV System 330 includes the process and equipment to perform the cerium (Ce^{+4}) container decontamination process, surface swabbing and swab monitoring process. The IHLW product containers are stainless steel cylindrical, approximately 177 inches long with a diameter of 24 inches.

HV System 330's design will encompass all aspects both directly and indirectly related to the container decontamination & swabbing cave within the scope, such as equipment transfer, container transfer, maintenance and repair and operations:

- Transport wash bogie with container to wash station
- Transport wash bogie with container to decontamination import hatch
- Transport container to decontamination vessel
- Transport container to swabbing turntable
- Transport container to container stores cave (System 340)

HLW System 330 location

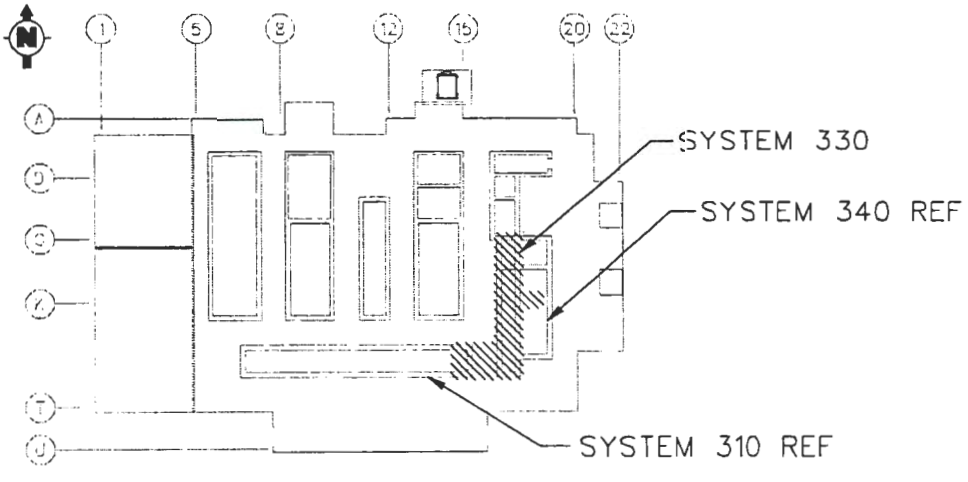

3. Applicable Documents

Mechanical Handling Diagrams (MHDs)
DWG-W375HV-M00525, HLW System 330 Level 1 Mechanical Handling Diagram
DWG-W375HV-M00526, HLW System 330 Level 1 Mechanical Handling Diagram

4. Functions

The design of HLW System 330 will incorporate safety features that will allow the system to comply with occupational exposure limits. The exposure and collective effective dose of any person to radiation is kept as low as reasonably achievable (ALARA). Automating the system will reduce the exposure by reducing manual operations or the need for manual intervention.

HV System 330 equipment performs the following functions:

- Provide defense in-depth features to reduce potential of dropping a container on process equipment, and/or cave structure.
- Provide equipment and processes to ensure that under a dropped load event the container is not damaged such that it becomes an out-of-specification container.
- Provide positive boundary to maintain contamination barrier between C5 and C3 areas.
- Provide positive boundary to maintain contamination barrier between C3 and C2 areas.
- Provide shielding to protect plant personnel from exposure to radiological material.
- Provide interlocks on Bogie Maintenance Area Shield Door to protect plant personnel from radiation and contamination exposure.
- Provide a decontaminated IHLW container suitable for storage, transport and disposal.
- Ensure bogies remain on rails during a seismic event.
- Ensure maintenance area shield door remains in place during a seismic event.
- Provide interlocks on crane maintenance area shield door to protect plant personnel from contamination exposure.
- Perform maintenance on in-cave equipment.
- Perform recovery operations on in-cave equipment.
- Transfer Waste Baskets (containing high level swabs) to Container handling cave.
- Decontaminate and swab IHLW containers.
- Transfer IHLW containers to container stores cave as required.
- Swab monitoring and swab packaging for disposal.
- Transfer IHLW container to decontamination cave from container handling cave (HV System 310).
- Rework a contaminated container – container goes back through a Ce decontamination cycle.

- Rework a container with residual glass deposits – container is routed back through rinse bogie and HV System 310 crane to System 320 for glass deposit removal.

5. Description

5.1. System Description

The container decontamination, swabbing, and swab monitoring, HV System 330, includes all vessels, piping, valves, bogies, associated equipment and instrumentation required to:

- Container water wash
- Prepare container decontamination solutions
- Transfer the decontamination solutions into the cave
- Decontaminate the container filled with vitrified high level radioactive waste
- Neutralize any residual chemical "milling" capability of the decontamination solution by reducing the Ce^{+4} to Ce^{+3}; and transfer the spent decontamination solutions to the process waste handling system.
- Transfer the container through the system
- Swab the container and monitor swabs via a thru-wall posting and monitoring machine

The decontamination waste solutions are recycled to the vitrification process by route of pretreatment.

The decontamination high level swabs will be processed in-cave to the solid waste container packaging System 440 and the low level swabs will be processed out-cave directly to the central waste store.

To isolate workers from the high radiation fields associated with the vitrified waste, all equipment used to process the waste containers is located inside a shielded cave. Equipment used to prepare the decontamination solutions is located out-cave.

This system consists of all items associated with the decontamination of filled, sealed product containers, measurement of surface contamination level through swabbing and swab monitoring, and recording of swab data. The container is initially washed with low pressure deionized water; the purpose of this wash is to remove any loose contamination that may be spread into the C3 decontamination/swabbing cave from the C5 container handling cave (HV System 310). The water wash is performed in a vessel mounted on a transfer bogie, which travels from below the container handling cave to below the decontamination/ swabbing cave. After the water wash, the container is further decontaminated using the cerium ion (Ce^{4+}) decontamination system. This decontamination system consists of two stations. The decontamination station which is located in-cave (Container Decontamination Vessel, Waste Neutralization Vessel, and two Breakpots To Waste Neutralization Tank) and a mixing station (including Nitric Acid Addition Tank, Cerium +4 Addition Tank, and Hydrogen Peroxide Addition Pot) which is located out-cave. Vertical separation between the stations facilitates gravity flow of process solutions from the mixing station to the decontamination station. A breakpot is also located in-cave. A pump associated with the nitric acid addition tank is employed in the nitric acid spray rinse system. A mechanism is employed to open and close the Container Decontamination Vessel lid.

The decontamination station is located in front of a viewing window. An overhead bridge crane in the cave is employed when performing container transfer operations. The solutions used for the container decontamination process are made-up in volumes suitable for decontamination of one container except for the container wash water which has a header as the source. These solutions include the nitric acid decontamination solution, the Ce^{+4} chemical solution, the nitric acid wash solution, and the hydrogen peroxide neutralization solution. This solution makeup approach minimizes the potential for tank overflow and using the incorrect chemical amounts. The Cerium +4 Addition Tank is supplied with chemicals from a drum using a drum pump. The Hydrogen Peroxide Addition Pot is manually supplied with chemicals from a container.

After washing with nitric acid and then deionized water, the container is swabbed using a programmable power manipulator. The swabs are transferred through the cell wall using a shielded rotary drum with intermediate gamma monitoring. The swabs are then monitored in a glovebox to obtain surface contamination information. When surface cleanliness has been verified, the container is placed into a bogie located below the decontamination cell floor. This bogie travels to a position below the C2 HV System 340 container storage/export cave. HV System 330 will also provide for the possibility of container transfer to a future additional storage vault.

5.2. System Configuration, Architecture, Arrangement, Location

Refer to Appendix A for figure of container decontamination, swab and monitor facility layout.

Note: Appendix A facility layout does not include the out-cave mixing tanks.

HV System 330 consists of a decontamination station and a swabbing station in an approximately 81'-6" long x 11'-0" wide cave at the 11'-0" and the 0'-0" levels respectively. Adjacent to that area is a crane maintenance area that is approximately 21'-6" long x 11'-0" wide and located at the 20'-0" level. Beneath the decontamination/swab cave is a container rinse bogie tunnel at the –16'-0" level and a container store transfer bogie tunnel at the –26'-0" level. At the 49'-0" floor level is the decon services room which houses the cerium, nitric acid, and the hydrogen peroxide feed tanks. The room is about 25'-0" long x 25'-0" wide and is positioned directly over the decontamination station in the decontamination/swab cave.

The container rinse tunnel is 90'-0" long x 11'-0" wide which includes a bogie decon area, a bogie maintenance area and houses the rinse bogie which transfers the container from the container handling cave to the decontamination/swab cave while performing a prewash at an intermediate station. The container store transfer tunnel is about 59'-0" long x 12'-0" wide and houses the store transfer bogie which transfers the decontaminated containers from the decontamination/swab cave to the container stores cave.

6. Operations

6.1. Normal Operation

This system consists of all items associated with the decontamination of filled, sealed containers, measurement of surface contamination level through swabbing and swab monitoring, and recording of swab data. The container is initially washed with low pressure deionized water; the purpose of this wash is to remove any loose contamination that may be spread into the C3 decontamination/swabbing cell from the C5 lid welding cell. The water wash is performed in a vessel mounted on a transfer bogie, which travels from below the container handling cell to below the decontamination/swabbing cell. After the

water wash, the container is further decontaminated by chemically etching the stainless steel from the container surface using cerium ion (Ce^{4+}) in dilute nitric acid.

The process of cerium (Ce^{+4}) container decontamination starts at the HV System 320 weld station. Visual and closed circuit television examinations for the presence of glass on the upper surface, the flange, and the lid of the container are performed. After the lid is attached by welding, the HV System 330 decontamination process begins as follows.

- The container wash bogie is locked in position under the container handling cell export hatch and is sealed to the port using an inflatable seal.
- A filled and sealed container is positioned above the export hatch using the HV System 310 container handling cell crane and the port is opened.
- The container is lowered into the wash bogie, the container grapple is released, and the grapple is raised clear.
- The hatch is closed and the seal is deflated.
- The bogie is moved to an intermediate location in the tunnel, and the seal is inflated against a special roof plate, isolating the wash vessel from the tunnel.
- Start the container water wash cycle. The container is spray water washed with low pressure deionized water while being rotated within the rinse vessel; the rinse water is also pumped to the neutralization vessel during the wash cycle.
- The hatch is closed, and the bogie is moved into position below the HV System 330 decontamination/swabbing cave import hatch.
- The hatch is opened, and the container is lifted into the cave using the decontamination/swab cave crane and grapple.
- When the wash is complete, the container is placed into the cerium decontamination vessel.
- Establish sparge airflow in the decontamination tank, and accept transfer of decontamination solution (HNO_3 and ceric nitrate) made up in the out-of-cell mix station. The quantity of ceric nitrate in solution is the amount needed to chemically "mill" a layer of stainless steel from the container surface.
- Transfer spent decontamination solution to the neutralization tank.
- Initiate HNO_3 spray wash flow to remove solution residue from the container.
- Transfer the acid rinse to the neutralization tank.
- Repeat the spray wash procedure using water. The low activity wash water is transferred to the waste handling system.
- After briefly spraying the container lid with HNO_3, remove decontamination tank lid and grapple the container.

- Allow the container to dry while hanging.

- After transferring the wash (rinse) solutions to the neutralization vessel, add hydrogen peroxide to deactivate any remaining Ce^{+4} in the spent decontamination and wash solutions, and transfer the contents to HV System 510.

- Transfer container to a position above the swabbing turntable.

- Perform full container inspection for glass. If glass is found, container is returned to HV System 320.

- Using clean swabs previously transferred into the cell via the swab posting machine, perform surface swab of the container bottom with the power manipulator.

- Swabs are placed into the swab posting machine.

- If the container bottom is sufficiently free of removable contamination, the container is placed on the container turntable.

- The remaining portions of the container are then swabbed, with the turntable rotating the container to provide full swab access.

- As swab samples are taken, the swabs are monitored.

- When it has been determined that the container is in compliance with surface contamination requirements, the container is exported to HV System 340 container store.

6.2. Manual Operations

The only manual operation in HV System 330 is the rotation on the swab posting machine which is done by turning a hand wheel to rotate the thru-wall turntable portion to the Beta/Gamma monitoring area and, if cleared, on around into the swab posting glovebox.

Appendix A
Decontamination, Swabbing and Monitoring System 330 Layout

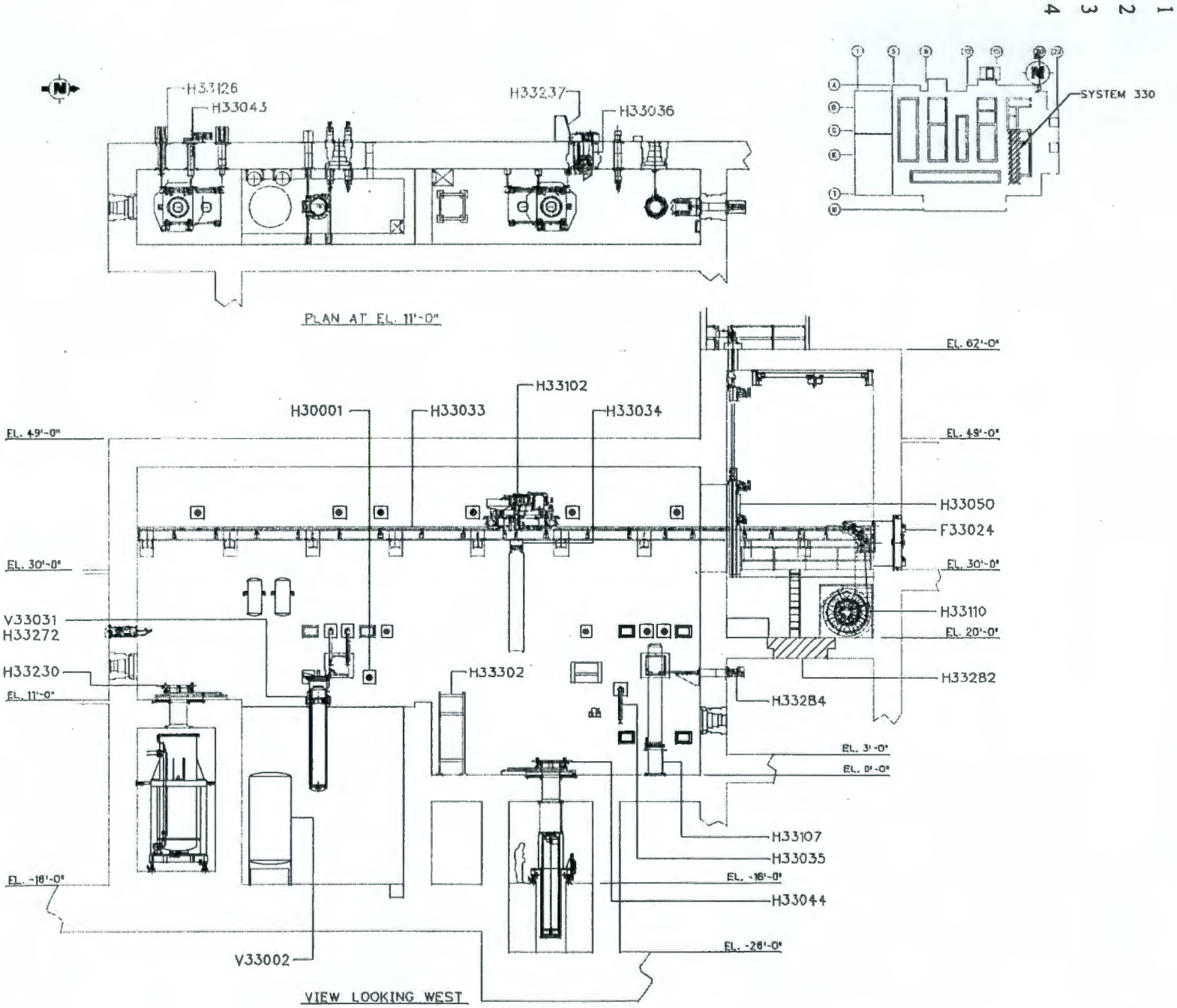
1
2
3
4
SYSTEM 330
H33126
H33043
H33237
H33036
PLAN AT EL. 11'-0"
EL. 62'-0"
H33102
H30001
H33033
H33034
EL. 49'-0"
EL. 49'-0"
H33050
F33024
EL. 30'-0"
EL. 30'-0"
H33110
EL. 20'-0"
V33031
H33272
H33230
EL. 11'-0"
H33302
H33282
H33284
EL. 3'-0"
EL. 0'-0"
H33107
H33035
EL. -16'-0"
EL. -16'-0"
H33044
EL. -26'-0"
V33002
VIEW LOOKING WEST

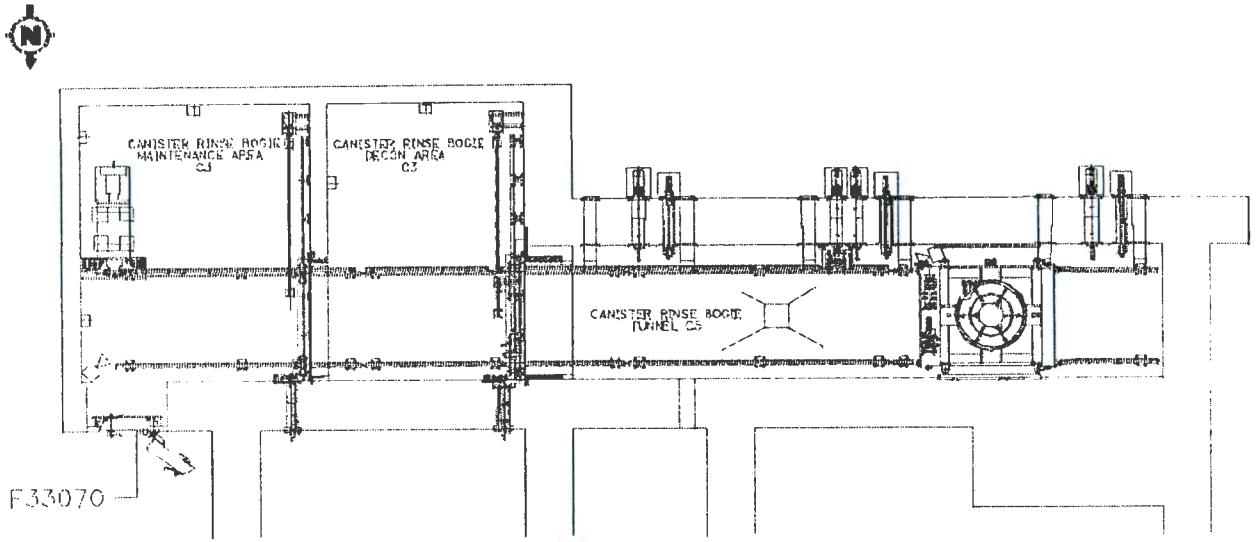

CANISTER WASH BOGIE PLAN AT EL. -16'-0'

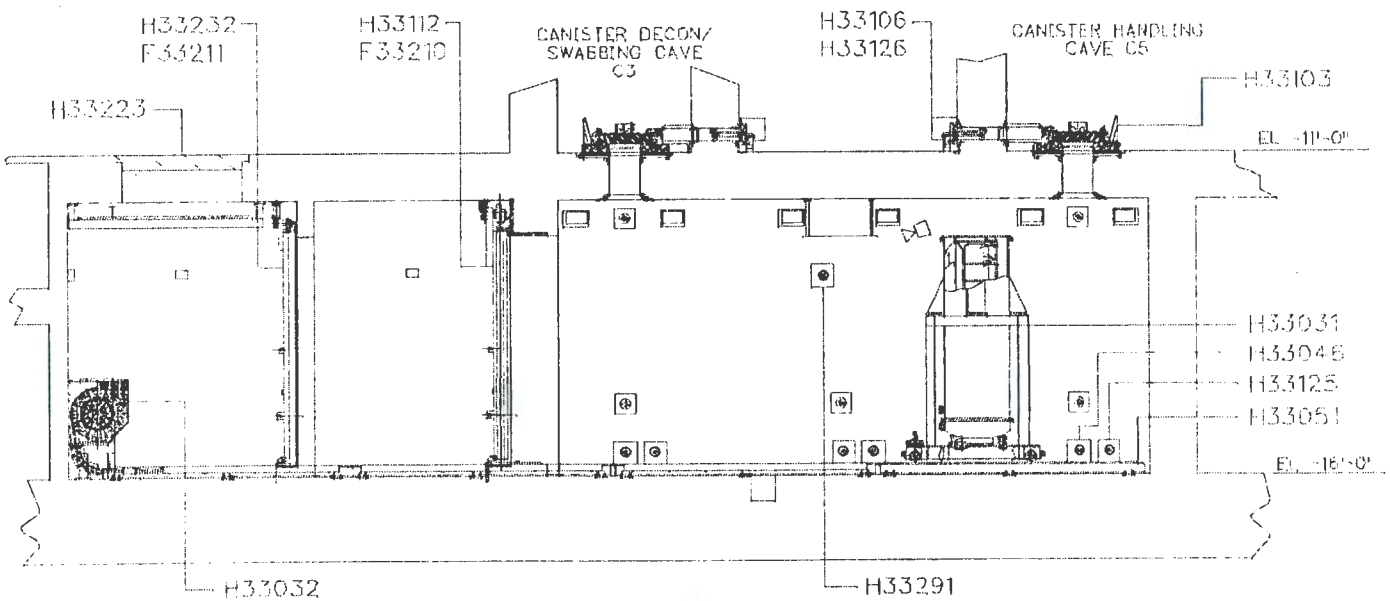

VIEW LOOKING SOUTH

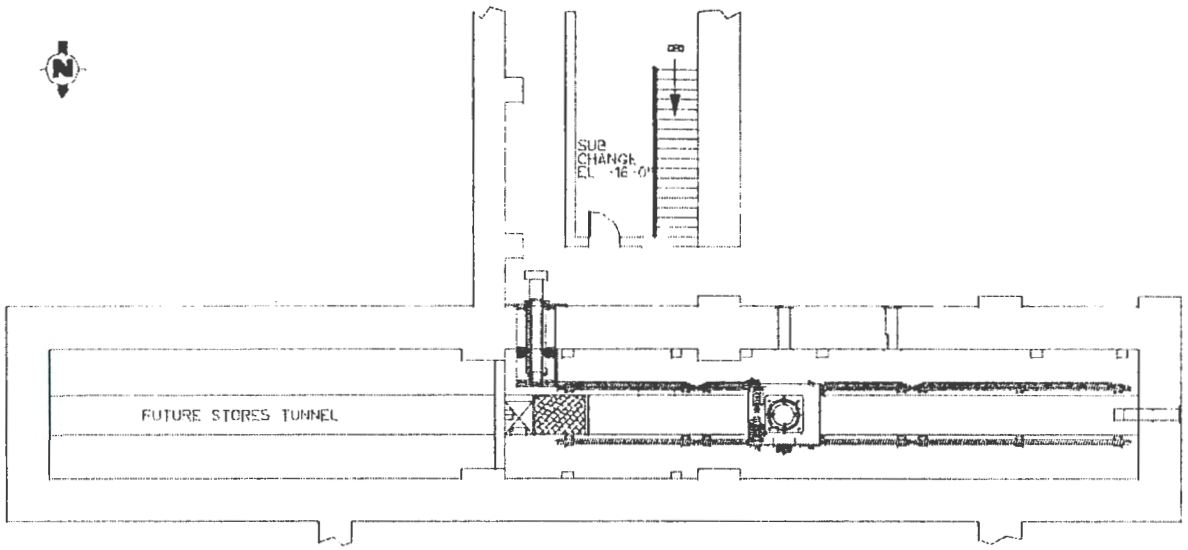

CANISTER STORAGE TRANSFER BOGIE PLAN AT EL. -16'-0"

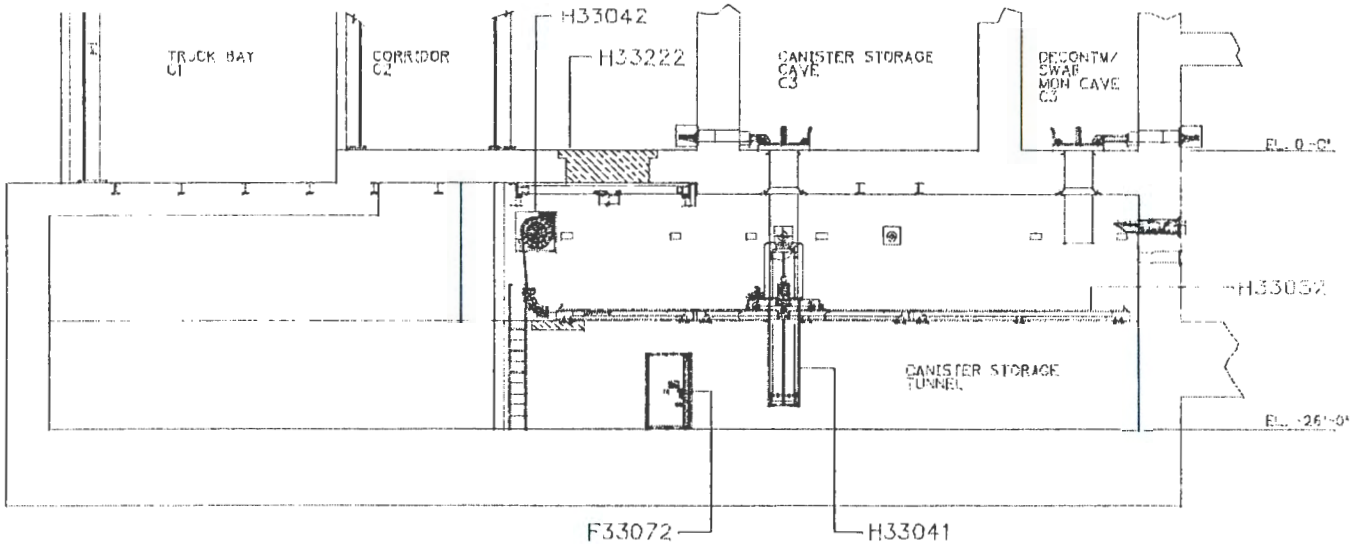

VIEW LOOKING SOUTH

HV System 340 – IHLW Container Storage and Export

1. Introduction

The Immobilized High Level Waste (IHLW) Container Storage and Export (HV System 340) provides the IHLW containers prior to transferring to a Hanford TSD site.

The System 340 consists of a shielded storage cave, a cask loading area, and a transport bay. When ready for export, containers are loaded into a shielded export cask in the cask loading area. The loaded cask is in turn transferred onto a transport vehicle.

2. System Scope

This system consists of all items associated with the receipt of product containers from HV System 330 IHLW Container Decontamination, Swabbing and Monitoring, storage of IHLW Containers, and preparation for shipment.

3. Applicable Document

HLW System 340 Level I MHD, DWG-W375HV-M00532.

4. Functions

The design of HV System 340 will incorporate features that will allow the system to comply with occupational exposure limits. The exposure and collective dose of any person to radiation is kept as low as reasonably achievable (ALARA). Automating the system will reduce the exposure by reducing manual operations or the need for manual intervention.

Equipment/processes will be provided to ensure that under a dropped load event the container is not damaged such that it becomes an out-of-specification container.

The following System 340 equipment performs the following functions:

4.1. Instruments and Controls

- Prevent Crane Maintenance shield door, Shielded Personnel Acces Door, or Lid Bolting Machine from opening when radiation/contamination exceeds limits.

- Warn personnel of radiation hazard/contamination in vicinity.

- Prevent opening of shield doors between caves and operator areas.

4.2. Shielding and Confinement

- Prevent unplanned/uncontrolled removal of through wall shield plug/drive.

- Maintain pressure differential and flow of air from the personnel access area into the cell under confinement breach conditions thus minimizing dose uptake to worker.

- Provide adequate shielding.

- Prevent inadvertent entry to high dose areas.

- Limit operator exposure during hands on maintenance operations.

4.3. Through Wall Drives

- Prevent loss of primary confinement due to drive seal failure.

4.4. In-Cave Cranes

- Support the maximum load to prevent load dropping that may lead to a challenge in cave and ventilation confinement systems.

- Be able to withstand the design basis seismic event without load drop.

- Be able to hold load on power failure.

- To be able to hold load in any motor or control fire to prevent rope mechanical damage or overstressing or hoist failure leading to load drop.

- To prevent horizontal impact of crane and/or load with other equipment during normal load handling leading to a challenge in the confinement systems.

4.5. Out-of-Cell Cranes (Crane Maintenance Area Crane, Cask Handling Crane)

- Be able to withstand the design basis seismic event without load drop.

- Be able to hold load on power failure.

- To be able to hold load in any motor or control fire to prevent rope mechanical damage or overstressing or hoist failure leading to load drop.

- To prevent horizontal impact of crane and/or load with other equipment during normal load handling leading to a challenge in the confinement systems.

4.6. In-Tunnel Bogie

- Prevent errant positioning at the Stores Export Hatch when loading container into the shipping cask resulting in retrieval problems in the tunnel.

- Prevent impact with equipment.

4.7. Grapple

- Prevent inadvertent release of container.

4.8. General

- Provision of remote viewing capabilities as well as shielded viewing capabilities. This function includes the requirement to regularly inspect the condition of the stored HLW containers as they reside in their storage locations within the Container Storage Rack, as well as the integrity of the storage area.

- Performance in a radioactive environment.

- Remotely maintaining and replacing in-cave equipment.

5. Description

5.1. System Description

The System 340 consists of a shielded storage cave, a cask loading area, and a transport bay. When ready for export, containers are loaded into a shielded export cask in the cask loading area. The loaded cask is in turn transferred onto a transport vehicle.

5.2. Design Features

Features incorporated into the design of the Container Storage and Export System include the following:

- All operations in the Container Stores Cave and the Cask Handling Tunnel are remotely performed through wall.

- Positioning and locking of Cask Handling Bogie achieved using an on-board Location Bolt, where possible.

- System designed to allow remote retrieval of failed Container Store Crane.

- Interlocks to prevent Container Store Import Hatch and Container Store Export Hatch from being open at the same time.

- Sufficient airflow shall be afforded around stored containers while in the Storage Rack. Airflow is required to dissipate residual heat from IHLW container cooling.

- Visual inspection of storage area and cask lidding sequence shall be performed through remote cameras. Provision of remote viewing capabilities as well as shielded viewing capabilities. This function includes the requirement to regularly inspect the condition of the stored IHLW containers as they reside in their storage locations within the Container Storage Rack, as well as the integrity of the storage area.

- Cascade airflow ventilation used to maintain contamination control interface boundaries.

- Features incorporated on Container Stores Crane Maintenance Area Shield Door to prevent shield door from opening in a seismic event.

- Shielding provided on Container Stores Crane Maintenance Area Shield Door to reduce the dose rate to an acceptable level for worst-case radioactive inventory.

- Gamma monitoring and keyed interlocks to prevent Cask Lid Bolting Machine opening when high radiation levels exist.

- System designed to allow remote closure of Container Stores Crane Maintenance Area Shield Door in the event of door failure in the open position.

- Design features to assure that the bolting of the lid has been accomplished prior to removal of the shipping cask from the Cask Handling Tunnel.

5.3. System Availability

The Container Storage Area is designed to accommodate approximately 45 storage rack positions.

5.4. Environmental Considerations

Considerations from the Dangerous Waste Permit Application:

- Dry storage - no free liquids
- Ventilation Control
- Heat generation from containers

6. Operations

6.1. Detailed Description

Initially, System 340 interfaces with System 330, in which HLW containers are decontaminated and monitored. When acceptable monitoring results are achieved, the container is ready for transport via a bogie and overhead crane to the System 340 stores area.

In preparation to receive a container for export, a road transport trailer containing an empty shipping cask will be parked at the parking lot adjacent to the HLW facility. The trailer with shipping cask will be moved into the Container Export Truck Bay. The Cask Handling Crane with Cask Lifting Apparatus is then positioned over the transport cask and latched to the cask lifting trunnions. The cask is released from the transport and raised to the minimum height in order to clear the transport trailer. The cask is transferred through the open truck bay containment door (roller/shutter door) and into the shielded cask loading station. The cask is lowered into the station until it rests in the Cask Handling Bogie. When the weight of the cask is fully supported, the Cask Lifting Apparatus is released, lifted back into the truck bay and parked on its stand. A worker at the cask loading station lowers the Cask Cowl onto the empty cask. The worker loosens the cask lid retaining bolts using the Cask Lid Bolt Impact Wrench. After all interlocks are satisfied, the Cask Handling Bogie is driven into position under the Lid Lifting Machine. The Lid Lifting Machine is activated, lifting the cask lid clear of the cask. The Cask Handling Bogie is then moved beneath the Container Store Export Hatch.

The Container Store Overhead Crane with Mechanical Sequence Grapple attached is positioned over the Decon Cave Export Hatch (HV System 330). The grapple grasps the container; the crane raises the container from the Container Store Transfer Bogie. The container is then placed in the container store or

if required immediately can be shipped out for export. The status of the container is entered into the Waste Tracking System. When exporting from the store, the crane lowers the container through the Container Stores Export Hatch into the shipping cask held by the Cask Handling Bogie. The grapple is then released, and the Cask Handling Bogie is positioned under the Lid Lifting Machine where the lid is placed on the cask. When the lid is fitted in place, a local radiation check is performed to ensure radiological levels have been attenuated by the placement of the lid, and the Cask Handling Bogie is traveled to the operator station for lid bolting. After the operator secures the lid retaining bolts to the required torque, the Cask Lid Bolting Machine is rolled to the open position for removal of the cask from the loading station.

Swab samples are taken manually around the flask lid/neck and also the Cowl at the Lid Bolting Machine. The swabs are monitored and surface contamination manually removed if present. When verified clean, the Cowl is removed using the jib crane. The truck bay roller shutter door is opened, and the cask is rigged to the Container Export Truck Bay crane. A local manual contamination check of the previously inaccessible cask exterior surfaces is performed. The cask is then lifted clear of the Cask Loading Station and into the truck bay. The crane moves the cask into position over the transport trailer. The cask is lowered onto the transport trailer and secured, and the roller shutter closed.

6.2. Safety and Interlock Requirements

- Cask Handling Crane attempts to move the shipping cask through roller shutter door when roller shutter door is closed (roller shutter door/cask risks being damaged, containment is lost). Interlock required preventing crane movement into containment area unless door is open.

- Roller shutter door attempts to close while crane is moving cask (roller shutter door/cask risks being damaged containment is lost). Interlock required preventing roller shutter door closing if hoist/cask is in danger zone.

- Cask Handling Bogie attempts travel to cask loading station without Cowl installed (cask outer surface risks being contaminated). Interlock may be required to prevent bogie travel unless cowl is installed.

- Cask Handling Bogie attempts to travel to Store Export Hatch area with cask lid in place (container/cask lid risks being damaged or grapple risks de-latching when hoist lowers container into cask). Interlock required preventing bogie travel unless cask lid is removed.

- Crane attempts to lower cask into cask handling bogie with Lid Bolting Machine rolled closed (risk of damaging Lid Bolting Machine). Interlock required preventing hoist-lowering container into cask unless Lid Bolting Machine is open.

- Store crane attempts to lower container into cask with Store Export Hatch closed (container/hatch risks being damaged or grapple risks de-latching when hoist lowers container towards cask). Interlock required preventing hoist lowering through stores export hatch unless hatch is open and clear.

- Cask Handling Bogie attempts to travel to Lid Bolting Station without lid fitted (operator risks radiation dose from direct shine). Gamma detectors/interlock required preventing bogie travel unless cask lid is properly installed.

7. Surveillance, Inspection and Testing

Periodic surveillance, inspection or testing provisions shall be required as follows:

- Maintenance access platforms provided around crane in maintenance area
- Window and MSMs provided for in-cave minor maintenance activities
- Dedicated hoist provided in crane decontamination and maintenance bays
- Sub-change room and access door provided for crane maintenance

HV System 510: HLW Vitrification Plant Liquid Effluent

1. Introduction and Scope

The HLW liquid waste system receives various effluents from different HLW treatment systems for collection and handling. These effluents include the following:

- Caustic scrubber bottoms
- Submerged bed scrubber (SBS) purge
- Wet electrostatic precipitator (WESP) drain
- High efficiency mist eliminator (HEME) drain
- Container decontamination waste
- Various plant and vessel washes
- Sump wastes
- Miscellaneous radioactive drains, including vessel vent, bulge, and cabinet drains

The HLW Vitrification Liquid Waste System contains four vessels as major plant items. These vessels are identified in Table 1. Currently, these vessels are located in the Secondary Offgas Cell, Wet Process Cell, or the Filter Cave.

This document describes the current design of HV System 510, Liquid Effluent. This design is reflected in the Process Flow Diagram DWG-W375HV-PR00036.

2. Process Description

The HLW vitrification liquid waste system is described in this section.

2.1. System Definition

The liquid waste system contains of the following major plant items and unit operations:

- V35001 Low Activity Waste Vessel
- V35002 Acidic Waste Vessel
- V35003 Plant Wash and Drains Vessel
- V35004 Acidic Waste Breakpot
- V35005 Plant Wash Breakpot
- V35006 Plant Wash Breakpot
- V35007 Plant Wash Breakpot
- V35009 Decontamination Effluent Collection Vessel
- V35008 Plant Wash Transfer Breakpot
- V35024 Plant Wash Breakpot
- V35025 Plant Wash Breakpot
- V35029A/B Acidic Waste Transfer Breakpot
- V35036 Plant Wash Breakpot
- V35037 Plant Wash Breakpot
- P35001A/B Low Activity Waste Transfer Pump
- P35020 Decontamination Effluent Transfer Pump
- W35014A/B Acidic Waste Transfer Pump

- W35031A/B Plant Wash Transfer Pump

The functional purpose of HV System 510 is to handle waste for interim storage and transfer the waste to pretreatment facilities where the waste is either recycled to the process or sent to the Effluent Treatment Facility (ETF). Various operations such as neutralization, mixing, and sampling of the waste are performed by these systems as required. Table 2 summarizes the waste origins and destinations. Effluent sources and disposition will be modified if impacted by future facility layout changes.

2.2. System Descriptions

HV System 510 equipment is located in the Secondary Offgas Cell, the Wet Process Cell, Active Service Duct, and the container handling area. HV System 510 receives radioactive liquid from the HLW Offgas System, the HLW Container Decontamination Process, and periodic plant and vessel washes within the HLW Vitrification Facility.

2.2.1. HLW Low Activity Waste Vessel (V35001)

Low activity liquid from the HLW Offgas Caustic Scrubber Effluent Collection Vessel (V32001) is transferred by pumps P32001 A/B to Low Activity Waste Vessel (V35001). If contaminated, suspect-active liquid from C2 Drain Collection Vessel (V35011) and Steam Condensate Collection Vessel (V35012) also is transferred from the non-active drains collection area to V35001 by pumps P35018 and P35019, respectively.

V35001 is equipped with air sparge system to maintain any solids in suspension. The vessel is fitted with pressure, level, density, and temperature indicators. Sampling will be performed as appropriate to characterize the waste before the content is transferred to Pretreatment Process Condensate Vessel (V15028A/B) by the Low Activity Waste Transfer Pump (P35001 A/B). Once in Vessel V15028A/B, the low-active liquid may be directed to the Effluent Treatment Facility, or to Contaminated Condensate Vessel (V15018), where the liquid will eventually be directed to the melter feed evaporator.

Wash water is provided to rinse V35001.

As an alternative handling route, a mechanical pump may be used to transfer the V35001 content to Plant Wash and Drains vessel (V35003).

Vessel V35001 overflows to the cell sump.

2.2.2. HLW Acidic Waste Vessel (V35002)

Vessel V35002 collects liquid from the Submerge Bed Scrubber (C32101) and the Submerged Bed Scrubber Condensate Collection Vessel (V32101). The collected waste consists of SBS purge, WESP drain, and HEME drain. The effluents enter V35002 via Acidic Waste Breakpot, V35004.

In addition, vessel V35002 receives routine flushes from HLW feed transfer line from Pretreatment via a diverter valve.

Vessel V35002 is equipped with pulsejet mixers to keep solids in suspension. The vessel is also fitted with pressure, level, density, and temperature indicators. Sampling will be performed via an auto sampler to characterize the waste. The contents are transferred to Strontium/TRU Precipitate Vessel (V12002) in Pretreatment by the Acidic Waste Transfer Pumps (W35014 A/B) and gravity flow from V35029 A/B.

As an alternative handling route, a steam ejector is available to transfer the V35002 content to Plant Wash Breakpot (V35007) from where the liquid gravity drains to Plant Wash and Drains Vessel (V35003.)

Vessel V35002 overflows to vessel V35003.

2.2.3. Plant Wash and Drains Vessel (V35003)

Vessel V35003 collects all vessels, sumps and plant washes within the HLW Vitrification Building. V35003 also collects wash water from cell walls, equipment exterior surfaces, stainless steel cladding, and bulges. V35003 is also the designated vessel to contain C3 area fire water. These effluents enter V35003 via Plant Wash Breakpots V35005, V35006, V35007, V35024, V35025, V35036, and V35037. The sizing and number of breakpots associated with V35003 will be established as the design progresses.

Vessel V35003 is equipped with pulsejet mixers to maintain any solids in suspension. The vessel is also fitted with pressure, level, density, and temperature indicators. Sampling will be performed via an auto sampler to characterize the waste as appropriate prior to transfer the waste to Pretreatment by the Plant Wash Transfer Pumps (W35031 A/B). If the sample results show that the vessel content meets the receiving limit of the Effluent Treatment Facility, the effluent will be transferred to Pretreatment Plant Wash Vessel (V15009). Otherwise, the effluent will be transferred to Strontium/TRU Precipitate Vessel (V12002). Transfer to the pretreatment facility is via a jet to V35008 A/B and gravity flow.

Wash water is provided to rinse V35003.

Vessel V35003 overflows to the cell sump.

2.2.4. Decontamination Effluent Collection Vessel (V35009)

Vessel V35009 receives liquid waste from Waste Neutralization Vessel (V33002) and Decontamination Bogie Vessel (V33004) via Decontamination Effluent Breakpot (V33005.) Vessel V35003 is equipped with pulsejet mixers to maintain any solids in suspension. The vessel is also fitted with pressure, level, density, and temperature indicators. The HLW container decontamination waste will be sampled prior to transfer to the pretreatment facility. If the sample results show that the vessel content meets the receiving limit of the Effluent Treatment Facility, the effluent will be transferred to Pretreatment Plant Wash Vessel (V15009) via breakpot V35008. Otherwise, the effluent will be transferred to Strontium/TRU Precipitate Vessel (V12002) via breakpot V35029.

Vessel V35009 overflows to vessel V35003.

3. Functions

<u>HV System 510 will be designed to include the following functions</u>:

- Maintain primary confinement of radioactive effluent
- Receive overflows
- Trip appropriate interlocks to prevent overfilling
- Prevent inadvertent transfer of contaminated effluent to non-contaminated areas
- Receive, store, and transfer effluent
- Detect radioactivity for the incoming condensate and plant wash
- Detect radioactivity prior to discharge

- Provide representative sample
- Maintain uniform mixture during neutralization
- Provide solids suspension for transfer

4. Normal Operations

A general outline for operations for the HLW vitrification liquid waste system is as follows:

- Receive radioactive process wastes, various vessel washes and cell sumps within HLW vitrification plant.

- Maintain solids suspended in the waste with air sparge system or pulsejet mixers.

- Sodium hydroxide addition to the tanks if needed.

- Obtain waste samples as required.

- Operate pumps P35001 A/B, ejectors W35014 A/B or ejectors W35031 A/B to transfer the effluent to Pretreatment.

- Level indication: level in the vessel is monitored for process condition and status. High level alarm alerts operators to high-fill condition. High-high level will result in the stop of the incoming transfer. Low level alarm alerts operator to low-fill condition. Low-low level will result in the stop of outgoing transfer.

- Temperature indication: temperature in the vessel is monitored for process condition and status.

- Density indication: density is monitored for process condition and status. The density is needed to determine the liquid level.

- Pressure Indicator: vessel vacuum is monitored to assure contaminated gas containment.

5. Safety and Interlock Requirements

A preliminary indication of not important to safety interlock features used in maintaining safe operations are described below.

- Prevent receiving waste when the vessel is at high-high liquid level.
- The pump and mixer are cut-off at low-low liquid level.
- The pump will stop transfer if the destination vessels (in pretreatment) reach high-high liquid level.

Table 1. Vessel Definition and Location

Description	Location
V35001 HLW Low Activity Waste Vessel	Secondary Offgas Cell
V35002 HLW Acidic Waste Vessel	Wet Process Cell
V35003 Plant Wash and Drains Vessel	Wet Process Cell
V35009 Decontamination Effluent Collection Vessel	Wet Process Cell

Table 2. Waste Handling Summary

Waste Origin	Liquid Waste Enters the Receiving Vessel via	Receiving Vessel	Effluent Destination
Caustic Scrubber C32001	V32001 Caustic Scrubber Receiver Vessel	V35001 HLW Low Activity Waste Vessel	V15028A/B Pretreatment Process Condensate Vessel
Submerged Bed Scrubber (SBS) C32101, V32101 SBS Condensate Collection Vessel, Wet Electrostatic Precipitator G32101, High Efficiency Mist Eliminator V32126 A/B	V35004 Acidic Waste Breakpot	V35002 HLW Acidic Waste Vessel	V12002 Strontium / TRU Precipitate Vessel
Waste Neutralization Vessel V33002	V33005 Decontamination Effluent Breakpot	V35009 Decontamination Effluent Collection Vessel	V15009 Pretreatment Plant Wash Vessel or V12002 Strontium / TRU Precipitate Vessel, based on radioactivity level
Decontamination Bogie Vessel V33004	V33005 Decontamination Effluent Breakpot	V35009 Decontamination Effluent Collection Vessel	V15009 Pretreatment Plant Wash Vessel or V12002 Strontium / TRU Precipitate Vessel, based on radioactivity level
Decontamination Effluent Collection Vessel V35009	V35008 Plant Wash Transfer Breakpot or V35029 Acidic Waste Transfer Breakpot		V15009 Pretreatment Plant Wash Vessel or V12002 Strontium / TRU Precipitate Vessel, based on radioactivity level
Steam condensate from various sources, including container decontamination process	V35012 Condensate Collection Tank	If off-spec, V35001 HLW Low Activity Waste Vessel	V15028A/B Pretreatment Process Condensate Vessel
Vessels and sump washings	V35005 Plant Wash Breakpot	V35003 Plant Wash and Drains Vessel	V15009 Pretreatment Plant Wash Vessel or V12002 Strontium / TRU Precipitate Vessel, based on radioactivity level
Non-routine sump and vessel washes from the Wet Process Cell and Active Service Duct	V35007 Plant Wash Breakpot	V35003 Plant Wash and Drains Vessel	V15009 Pretreatment Plant Wash Vessel or V12002 Strontium / TRU Precipitate Vessel, based on radioactivity level
Melter feed prep and feed vessel washes, bulges, cabinets and other miscellaneous sumps and drains.	V35006 Plant Wash Breakpot	V35003 Plant Wash and Drains Vessel	V15009 Pretreatment Plant Wash Vessel or V12002 Strontium / TRU Precipitate Vessel, based on radioactivity level