START

119

0030317

DOE/RL-93-49
Draft A

618-11 Burial Ground Expedited Response Action Proposal

Date Published
August 1993

United States
Department of Energy
P.O. Box 550
Richland, Washington 99352

AUG 1993
RECEIVED
EDMC

Approved for Public Release

THIS PAGE INTENTIONALLY
LEFT BLANK

9413204.0432

TRADEMARK DISCLAIMER

Reference herein to any specific commercial product, process, or service by trade name, trademark, manufacturer, or otherwise, does not necessarily constitute or imply its endorsement, recommendation, or favoring by the United States Government or any agency thereof or its contractors or subcontractors.

This report has been reproduced from the best available copy.

Printed in the United States of America

DISCLM-4.CHP (1-91)

THIS PAGE INTENTIONALLY
LEFT BLANK

EXECUTIVE SUMMARY

In July 1992, the United States Environmental Protection Agency (EPA) and the Washington State Department of Ecology (Ecology) completed their review of Expedited Response Action (ERA) candidate sites. A letter was issued to the United States Department of Energy (DOE) recommending an Engineering Evaluation and Cost Analysis (EE/CA) be prepared for the 618-11 Burial Ground (Appendix A).

Between 1962 and 1967, 300 Area Hanford Laboratory Operations waste, including remote-handled hot cell waste, was disposed of in unlined trenches, pipe units, and caissons at the 618-11 Burial Ground. Record keeping practices at that time required only that the burial ground be physically marked and that an approximate account of waste volume be reported. Specific contents were not identified or characterized. Transuranic (TRU) and hazardous chemical constituents were not segregated from the waste stream.

The 8.6-acre burial ground was established approximately 7.5 mi northwest of Hanford's 300 Area. The site location was chosen because its isolation, at that time, provided increased worker safety in regards to potential dose rate exposure. Presently, a privately owned, operating nuclear power plant is situated directly adjacent to this burial ground.

The proximity of the buried waste to the water table increases the potential of contamination migration. Better options for burial sites at Hanford are on the 200 Area plateau, where depth to groundwater is greater than 200 ft.

The 1987 environmental impact statement (DOE 1987) identified this site as one containing significant amounts of TRU waste and recommended the waste be exhumed for processing and relocation. The principal objective of the 618-11 Burial Ground Expedited Response Action Proposal is to evaluate alternatives and recommend an option that best meets the selection criteria prescribed by the Comprehensive Environmental Response, Compensation, and Liability Act (CERCLA). It also estimates costs for each alternative.

The Expedited Response Action alternatives considered were:

- No Action
- Increased Monitoring
- Removal and Monitored Storage
- Demonstration/Feasibility Study.

The alternative actions were evaluated for timeliness and protectiveness with respect to human health and the environment. The options were again screened to determine their effectiveness regarding technical feasibility, reliability, positive impacts, administrative feasibility, and cost.

A removal action was eliminated from the choices. A threat to human health and the environment from this buried waste has not been identified due to the absence of data. A lack of an operational waste processing facility and a decision for an ultimate disposal site for high activity and transuranic

9413204.0432

material complicates removal actions. Based on the previously described criteria, Increased Monitoring was chosen as the preferred alternative for the expedited response to the 618-11 Burial Ground. Should increased monitoring show positive results with regard to contamination migration, appropriate actions will be taken.

9413270.0104

ABBREVIATIONS, ACRONYMS, AND INITIALISMS

ALARA	As Low as Reasonably Achievable
AMSL	Above Mean Sea Level
ARARs	Applicable or Relevant and Appropriate Requirements
BWL	Boiling Water Reactor
CERCLA	Comprehensive Environmental Response, Compensation, and Liability Act
CFR	Code of Federal Regulations
CSM	Conceptual Site Model
DOE	U.S. Department of Energy
DOT	U.S. Department of Transportation
DSC	Dry Shielded Canister
Ecology	Washington State Department of Ecology
EE/CA	Engineering Evaluation/Cost Analysis
EPA	Environmental Protection Agency
ERA	Expedited Response Action
FC_2	Federal Candidate Species
HDW-EIS	Hanford Defense Waste Environmental Impact Statement
HEIS	Hanford Environmental Information System
HEPA	High Efficiency Particulate Air
HRCQ	Highway Route Controlled Quantity
HRS	Hazard Ranking System
HSM	Horizontal Storage Module
IRA	Interim Response Action
LSA	Low Specific Activity
MFP	Mixed Fission Product
MSCM	Mobile Surface Contamination Monitor
msl	mean sea level
NCP	National Oil and Hazardous Substances Pollution Contingency Plan
NPDES	National Pollutant Discharge Elimination System
NRC	Nuclear Regulatory Commission
PA/SI	Preliminary Assessment/Site Inspection
PWR	Pressurized Water Reactor
RCRA	Resource Conservation and Recovery Act
RH	Remote-handled
RI/FS	Remedial Action/Feasibility Study
RL	Richland Field Office
RLWS	Radioactive Liquid Waste System
RM	river mile
ROD	Record of Decision
ROM	Rough Order of Magnitude
SAR	Safety Analysis Report
SARP	Safety Analysis for Packaging
SC	State Candidate Species
TBC	to-be-considered
TPA	Hanford Federal Facility Agreement and Consent Order
TRU	transuranic
USGS	U.S. Geological Survey
USRADS	Ultra Sonic Ranging and Data System
USQ	Unreviewed Safety Question
WAC	Washington Administrative Code
WHC	Westinghouse Hanford Company
WNP-2	Washington Public Power Supply System plant no. 2
WRAP	Waste Receiving and Processing

9413204.0435

CONTENTS

1.0 INTRODUCTION 1

2.0 BACKGROUND 2
2.1 SITE DESCRIPTION 2
2.2 TOPOGRAPHY 6
2.3 VADOSE ZONE GEOLOGY 6
2.3.1 Hanford Formation 6
2.3.2 Ringold Formation 9
2.4 CLIMATE 11
2.5 HYDROLOGY 12

3.0 HISTORICAL PERSPECTIVE 17
3.1 SHIPMENT DESCRIPTION 18
3.2 SHIPMENT LOGS 22
3.3 RADIATION LEVELS AND CONTAMINATION INCIDENTS 23

4.0 CONTAMINANTS OF CONCERN 23
4.1 HAZARDS OF SPECIAL CONCERN 24
4.2 CHARACTERIZATION AND MONITORING 25
4.3 CONCEPTUAL SITE MODEL 29
4.3.1 Source 29
4.3.2 Release Mechanism 30
4.3.3 Transport Media 30
4.3.4 Exposure Route 30
4.3.5 Receptor Population 32

5.0 APPLICABLE OR RELEVANT AND APPROPRIATE REQUIREMENTS 32
5.1 POTENTIAL REQUIREMENTS 33
5.2 ANTICIPATED MEDIA CLEANUP REQUIREMENTS 33
5.3 WASTE CHARACTERIZATION AND STORAGE REQUIREMENTS 34
5.4 SHIPPING AND PACKAGING REQUIREMENTS 34

6.0 DESCRIPTION OF ACTION ALTERNATIVES 35
6.1 NO ACTION 36
6.2 INCREASED MONITORING 38
6.3 REMOVAL AND MONITORED STORAGE 39
6.3.1 Removal of Trench Wastes 40
6.3.2 Removal of Caisson Wastes 41
6.3.3 Removal of Pipe Wastes 42
6.4 DEMONSTRATION/FEASIBILITY STUDY 43

7.0 EVALUATION OF ALTERNATIVES 44
7.1 NO ACTION 45
7.1.1 First Phase Evaluation 45
7.1.2 Second Phase Evaluation 46
7.1.3 Risk Considerations 47
7.2 INCREASED MONITORING 48
7.2.1 First Phase Evaluation 48
7.2.2 Second Phase Evaluation 48
7.2.3 Risk Considerations 49

9413204.0436

CONTENTS (cont.)

7.3 WASTE RETRIEVAL AND MONITORED STORAGE 49
7.3.1 First Phase Evaluation 49
7.3.2 Second Phase Evaluation 51
7.3.3 Risk Considerations 52
7.4 FEASIBILITY DEMONSTRATION 52
7.4.1 First Phase Evaluation 52
7.4.2 Second Phase Evaluation 53
7.4.3 Risk Considerations 54
7.5 COMPARATIVE SUMMARY AND SELECTION OF PREFERRED ALTERNATIVE . . 54

8.0 REFERENCES 56

ATTACHMENT:

1 Metric Conversion Chart Att-1
2 Plate 1 . . . . . Plate 1

APPENDICES:

Appendix A Letter A-1
Appendix B 618-10 Burial Ground Information B-1
Appendix C 618-11 Burial Ground Information C-1
Appendix D Transportation and Packaging Information Related to 618-11 ERA D-1
Appendix E Cost Analysis E-1

FIGURES:

1 Hanford Site 3

2 Pipe Unit Construction 4

3 Large-Diameter Caisson Construction 5

4 Alternative Caisson Design 7

5 Relationship of 618-11 Burial Ground to WNP-2 8

6 General 618-11 Area Water Table Map 14

7 Water Table Elevation Trends 15

8 Remote Deposition of Waste 20

9 325-A Waste Disposal Containers 21

10 Wells Near 618-11 Burial Ground 28

11 Conceptual Model 31

CONTENTS (cont.)

TABLES:

1 Grain Size Nomenclature 9

2 Typical Grain Size Distribution, wt% 10

3 Shipments to 618-11 (300 Wye) Burial Ground 22

4 HEIS Groundwater Data for Wells Within 6000 ft of the 618-11 Burial Ground. 27

5 Potential ERA Options/Goals 37

6 Screening of Action Alternatives 54

7 Second Phase Evaluations 55

9413204.0438

1.0 INTRODUCTION

The 618-11 Radioactive Waste Burial Ground on the Hanford Site has been selected by the Washington Department of Ecology (Ecology) and the U.S. Environmental Protection Agency (EPA) to become the subject of an expedited response action (ERA). An ERA is a mechanism to accelerate response to hazardous substance releases or threats under the Comprehensive Environmental Response, Compensation, and Liability Act of 1980 (CERCLA). This type of CERCLA action is addressed in the *Hanford Federal Facility Agreement and Consent Order* (Tri-Party Agreement) (Ecology et al. 1989) as an interim response action (IRA).

At the time of waste internment, the 618-11 Burial Ground was considered the location for final disposition. Packaging was intended primarily for transport and not for storage. Furthermore, packages were not placed in engineered retrievable units, nor were detailed inventory records maintained. The burial ground likely contains waste which, if generated today, would be regulated hazardous waste, as well as radioactive waste. Record keeping, location, and containment fall short of present acceptable waste disposal practices.

The U.S. Department of Energy (DOE) *Hanford Defense Waste Environmental Impact Statement* (HDW-EIS) (DOE 1987) suggests that the preferred alternative for pre-1970 suspect transuranic (TRU) waste at Hanford's 618-11 Burial Ground should be retrieval. Retrieved waste would be processed and repackaged for ultimate geologic disposal. Since the waste was unsegregated at the time of internment, retrieval of the entire contents of the burial ground may be necessary. If required, the contents would be removed to the 200 Area plateau for storage and eventual processing for disposal. TRU waste would be segregated from other fractions, and disposed as newly generated TRU waste. Segregated non-TRU waste would be disposed onsite in near-surface, low-level waste disposal trenches (DOE 1987). New facilities, procedures, and capabilities need to be developed to properly handle, separate, segregate, and treat waste for final disposal.

This report proposes various potential expedited actions for the 618-11 Burial Ground. It includes an engineering evaluation/cost analysis (EE/CA) required for non-time-critical removal actions by Subpart E of the National Oil and Hazardous Substances Pollution Contingency Plan (NCP) (EPA 1990). Alternatives are evaluated and a recommended alternative suggested.

All measurements given herein are actuals as found in reference documentation; a conversion chart is provided as Attachment 1 for those wishing to convert units to English/Metric.

2.0 BACKGROUND

The 618-11 Burial Ground is a waste site located off the 200 Area plateau that is suspected to contain significant quantities of high activity and TRU waste (DOE 1987). The waste is buried in three types of disposal units: pipe units, trenches, and large-diameter caissons. The location and physical characteristics, climate, geology, and hydrology of the 618-11 Burial Ground are presented in the following sections.

2.1 SITE DESCRIPTION

The 618-11 Burial Ground is located approximately 7.5 mi northwest of Hanford's 300 Area, within the 300-IU-1 Operable Unit. It is directly adjacent to the Washington Public Power Supply System commercial power plant No. 2 (WNP-2), 1.5 mi northeast of Highway Route 4 South (Figure 1). The site is a 375- by 1,000-ft rectangular area oriented east to west. A perimeter chain-link fence and concrete marker posts delineate the site, enclosing an area of 8.6 acres.

9413204.0440

The burial ground contains 3 burial trenches, 50 pipe units, and several 8-ft-diameter caissons. Because the entire burial ground has been covered with clean soil, individual disposal units are no longer visible.

The trenches were V-shaped troughs approximately 900 by 50 ft and 25 ft deep. Trench sides were sloped at approximately 1 ft horizontal to 1 ft vertical. Trench burials began in 1962. Trenches were installed and filled beginning with the most northerly trench, and numbered sequentially in order of installation (1, 2, 3). Waste was deposited at the active end and covered with adjacent fill from the excavation.

The pipe units were made by welding together five standard 55-gal drums with their bottoms removed (Figure 2). The 15-ft-long cylinders were buried vertically and spaced 10 ft apart in three distinct rows. The first row of 20 units and a second row of 10 units were installed as a group in September 1963. The center row of disposal units is divided into two sections by a 130-ft void space. The third row of 10 disposal units and 10 units in the western section of the second row were added a short time later.

The large-diameter caissons were added to the west end of the middle row of pipe units in September 1964. Written records conflict with the site drawing (Plate 1) as to the total number of large-diameter caissons actually installed. Available evidence indicates a total of four large-diameter caissons exist at the 618-11 Burial Ground.

The plot plan (Plate 1) shows a large-diameter caisson design in inset "Detail B". The design consists of a 10-ft long, 96-in.-diameter, 8-gage corrugated metal pipe placed vertically on footings (Figure 3). A 10-ft square, 8-in.-thick concrete slab placed atop the open pipe forms the caisson ceiling. No engineered bottom exists. A 36-in.-diameter chute extends 15 ft to the ground surface. In contrast to pipe units whose openings were in direct line-of-sight with deposited waste, caisson openings were offset 11.5 ft with two 30-degree bends, reducing radiological exposure and contamination spreads.

Figure 1. Hanford Site.

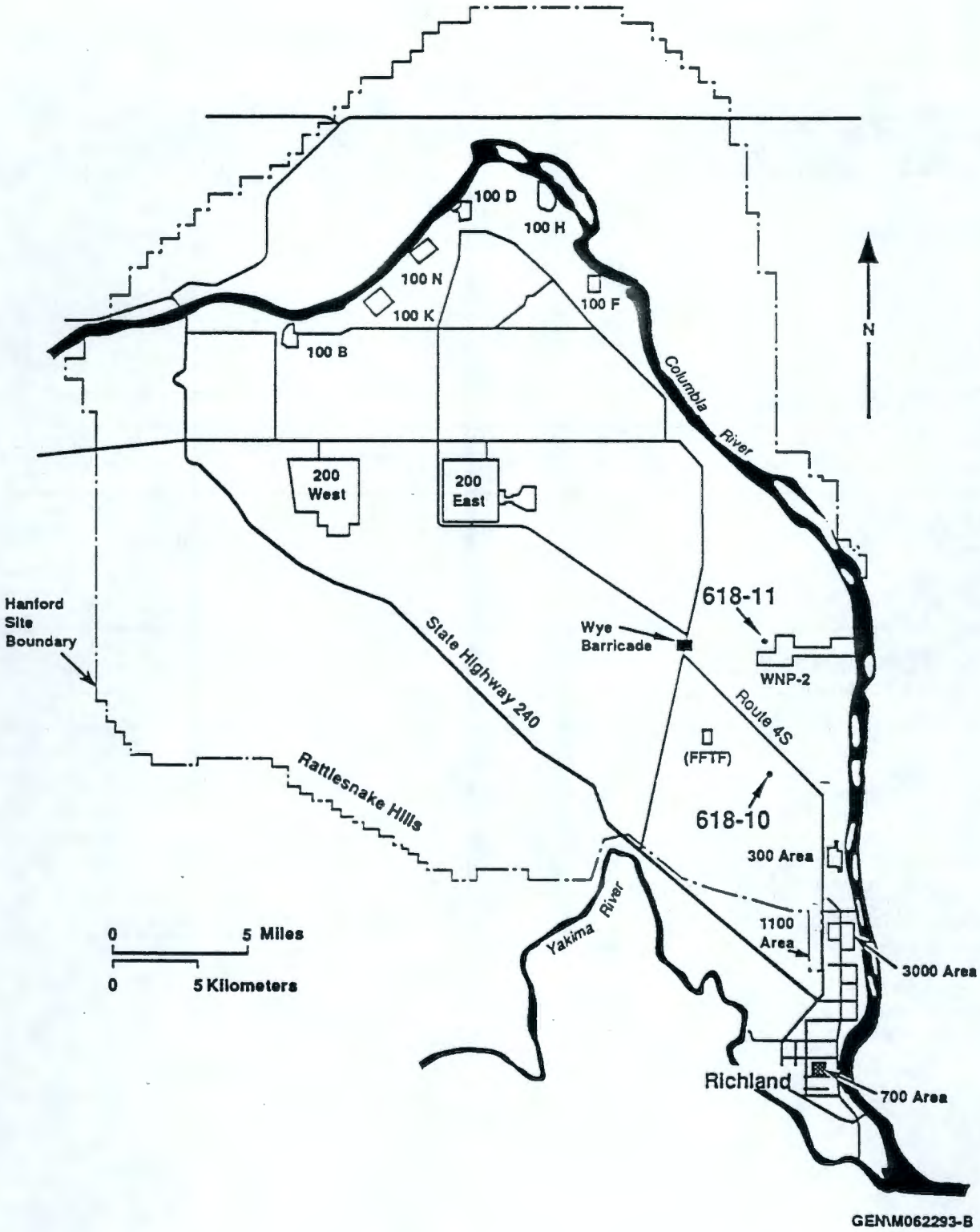

Figure 2. Pipe Unit Construction.

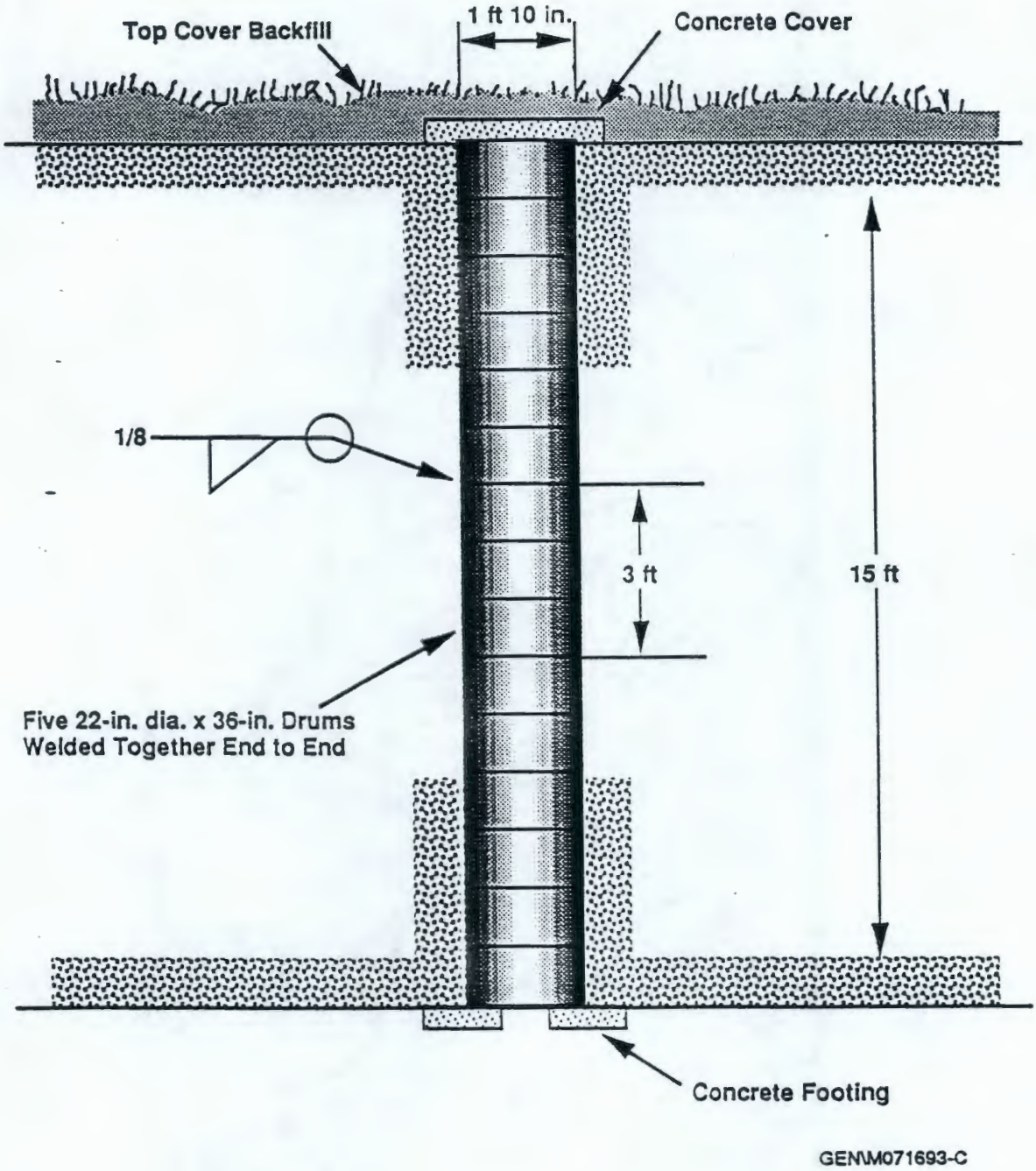

9413204.0442

Figure 3. Large-Diameter Caisson Construction.

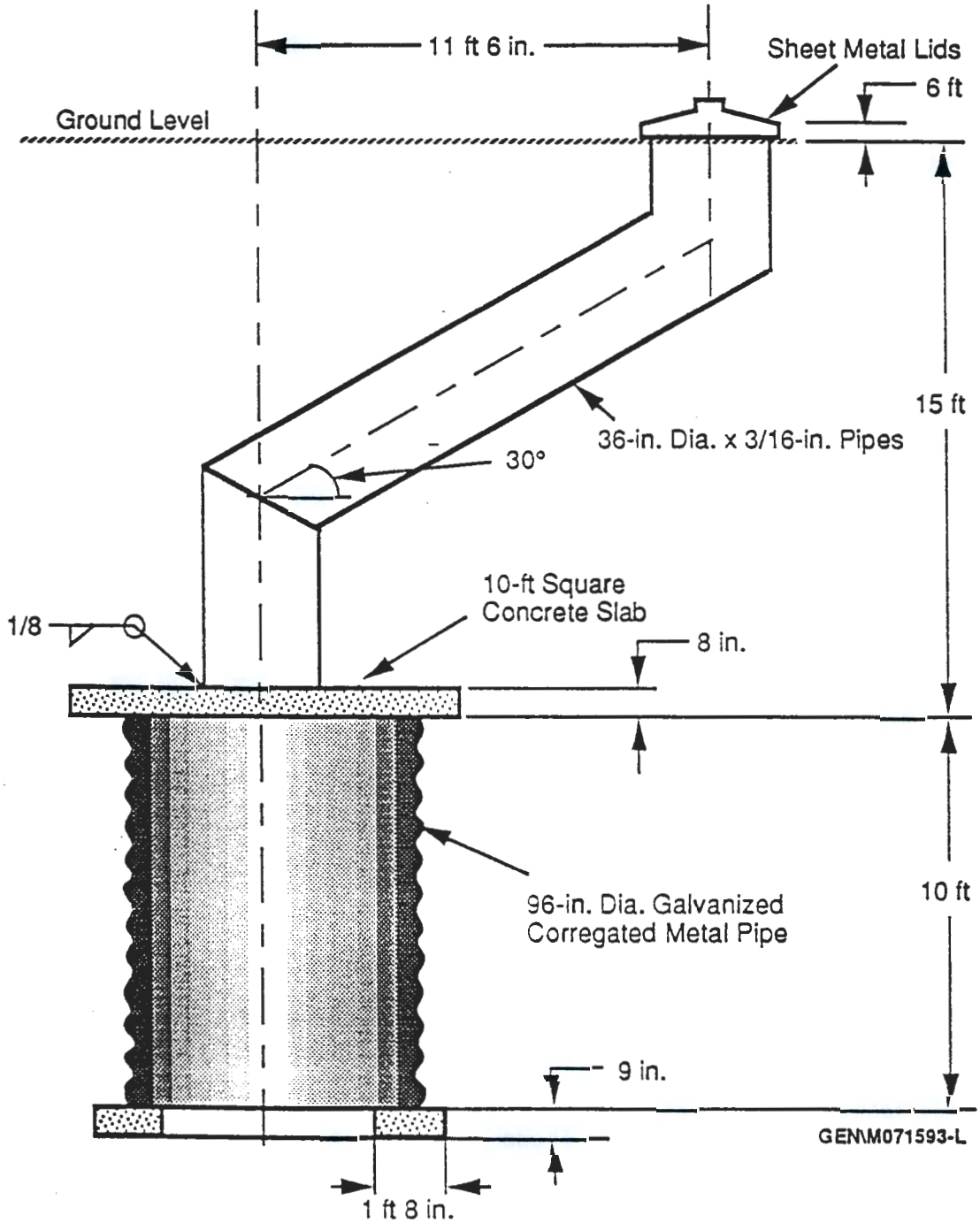

9413204.0426

The unit design details shown on the plot plan (Plate 1) do not account for the two 24-in.-diameter openings shown on the west side of the center row. Only 36-in.-diameter openings are identified in Detail B. A sketch has been located revealing another caisson design. A computer reproduction of this sketch is shown (Figure 4). It consists of two 24-in.-diameter offset chutes feeding a single caisson. This caisson is also a 96-in.-diameter corrugated metal pipe, but it is 12 ft long and lies horizontally. Wood timbers block the open ends. Two evenly spaced chutes were installed to assure efficient filling. This design offers an explanation consistent with the two 24-in. openings.

2.2 TOPOGRAPHY

The U.S. Geological Survey (USGS) issued a report that estimated the altitude of the burial ground at 440 ft (La Sala and Doty 1975). Two to four ft of topsoil was added when the site was surface stabilized and revegetated in 1982. There is no plant topographic map of the burial ground area, but general land surface profiles can be seen in Figure 5, which is the most current aerial photograph, taken in May 1993.

Longitudinal west-to-east stabilized dunes can be found in the vicinity. Overall, the topography is relatively flat. A USGS report characterized the general topography as rolling prairie with intervening broad, flat meadows (La Sala and Doty 1975). La Sala and Doty (1975) also noted that a low medial ridge, 4 to 5 ft high, trends east-west through the burial ground.

2.3 VADOSE ZONE GEOLOGY

A veneer of eolian sand sand silt, about 5 ft thick, covers the area of the 618-11 Burial Ground (Brown and Isaacson 1977). The two underlying geologic units, the Hanford and Ringold formations, comprise the vadose zone at the 618-11 site. The Hanford formation lies above the Ringold and comprises the majority of the sediment volume above the water table. Both formations are described below.

2.3.1 Hanford Formation

The burial ground is located in the Hanford formation. It comprises the major upper portion of the vadose zone at most of the Hanford Site. It is a sedimentary unit that was deposited as a result of periodic cataclysmic Ice Age floods. Vast quantities of water flooded the area when distant, prehistoric ice dams were breached. These flood events resulted in deposition of material commonly ranging in size from boulder to clay, depending on the localized energy regime at the time of deposition. Table 1 shows the sizes of various particle classifications commonly used at Hanford. Finer-grained sediments were deposited under low-flow energy regimes, while coarse-grained gravels were deposited under high-energy flows of the ancient flood channels.

Figure 4. Alternative Caisson Design.

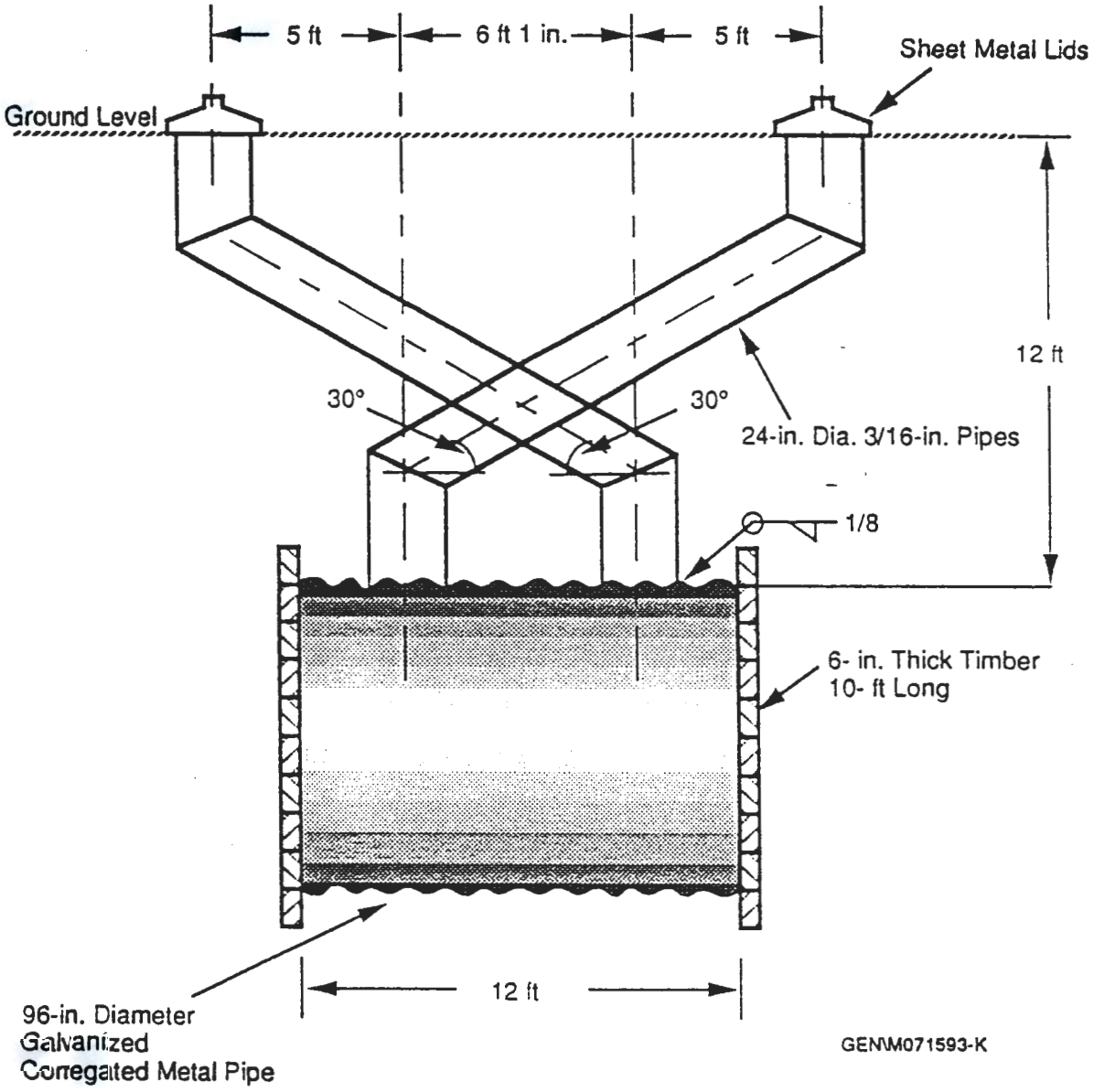

9413204.0445

Figure 5. Relationship of 618-11 Burial Ground to WNP-2.

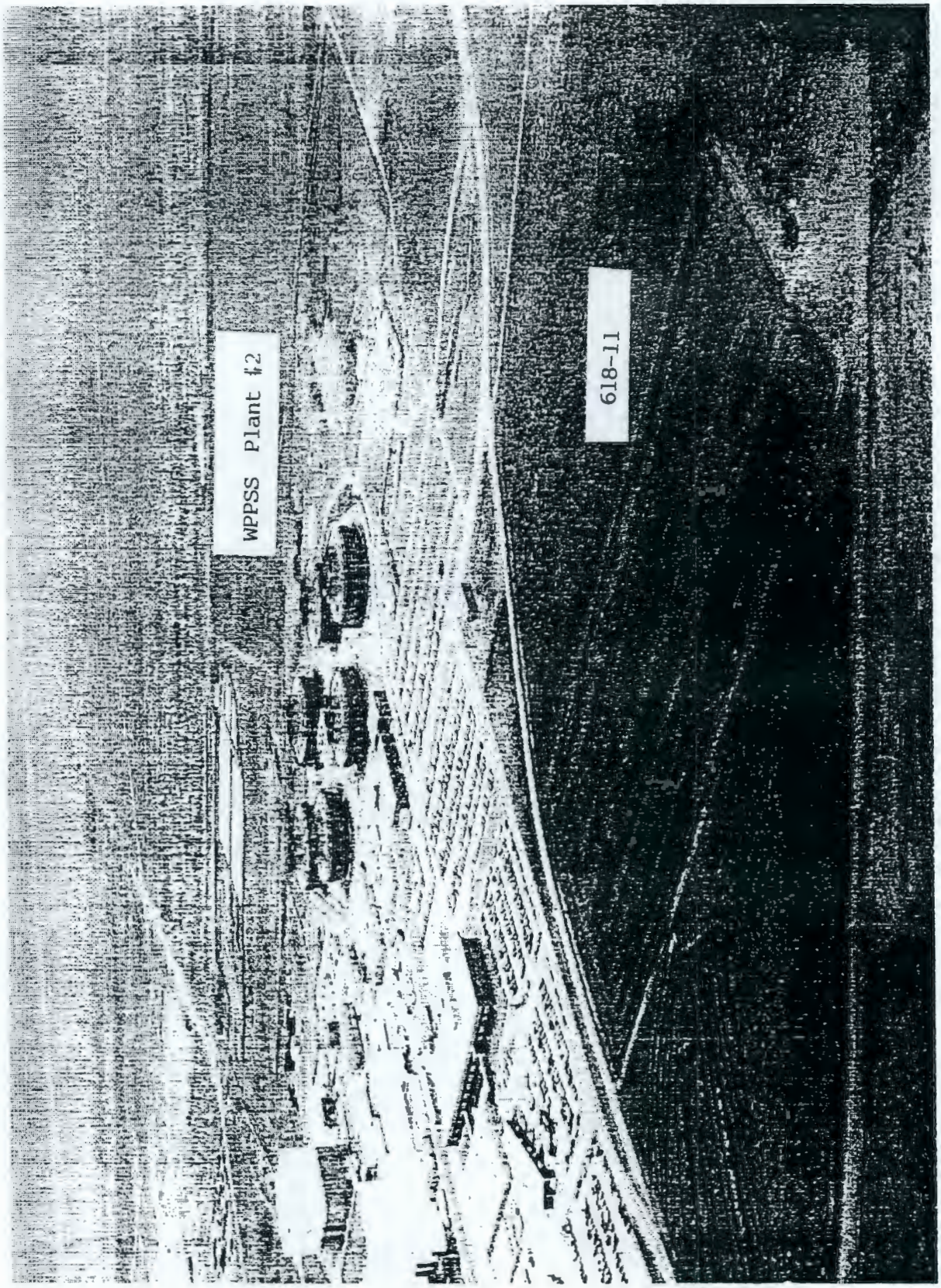

9413204.0446

Table 1. Grain Size Nomenclature.

Particle designation	Particle diameter, mm
Boulder	<256
Cobble	
Large	256 to 128
Small	128 to 64
Pebble	
Very coarse	64 to 32
Coarse	32 to 16
Medium	16 to 8
Fine	8 to 4
Very fine	4 to 2
Sand	
Very coarse	2 to 1
Coarse	1 to 0.5
Medium	0.5 to 0.25
Fine	0.25 to 0.125
Very fine	0.125 to 0.0625
Silt/clay	<0.0625

Source: WHC 1988a

The report, *The Hanford Environment as Related to Radioactive Waste Burial Grounds and Transuranium Waste Storage Facilities* (Brown and Isaacson 1977) gives a typical grain size distribution and calcium carbonate content for the Hanford formation at the 618-11 Burial Ground. This distribution is shown in Table 2. Here the formation, locally up to 18.2 m thick, consists of slightly silty, medium to fine sand with lenses of gravelly coarse sand and silty fine sand. Though cobbles are listed at 0% in the table, photographs taken when trenches were open show some cobble is present. Calcium carbonate content is 1.0% (Brown and Isaacson 1977). WNP-2 foundation investigations described the local Hanford formation as fine to coarse sand with gravel (Shannon and Wilson 1971).

2.3.2 Ringold Formation

The Ringold Formation is the next major unit beneath the Hanford. It consists of moderately consolidated fluvial-lacustrine sediments and is the principle member for the unconfined aquifer at Hanford. (None of the 618-11 Burial Ground trenches, pipe units, or caissons are buried in this unit.) Typical Ringold Formation grain-size distributions beneath the 618-11 Burial Ground are given in Table 2 (Brown and Isaacson 1977). Calcium carbonate content is 0.5%. The unit beneath the Hanford formation at the burial ground is also known as the middle Ringold unit. The top of the formation is absent in this area. The middle Ringold unit consists of silty-sandy gravel with interstitial spaces filled with varying amounts of sand and silt.

9413204.0947

Table 2. Typical Grain Size Distribution, wt%.

At 618-11 - Hanford Formation
Lithology: slightly silty medium to fine sand

Pebbles and cobbles	0
Sand	
Very coarse	1
Coarse	13
Medium	41
Fine	23
Very fine	8
Silt and clay	3

At 618-11 - Major Middle Ringold
Lithology: silty sandy gravel

Pebbles and cobbles	65
Sand	
Very coarse	14
Coarse	9
Medium	4
Fine	3
Very fine	2
Silt and clay	3

-Source: Brown and Isaacson 1977

Based on stratigraphic fence diagrams for the burial ground appearing in *Characterization of the Hanford 300 Area Burial Grounds* (Phillips et al. 1980), as well as those presented by Brown and Isaacson (1977), the top of the Middle Ringold unit is at an elevation of about 390 ft. This is roughly 50 ft below the surface and 20 ft below the trench and caisson bottoms. The water table beneath this burial ground is near the top of the Middle Ringold Formation.

WNP-2 foundation investigations reported the precise distinction between the Hanford and Ringold formations was difficult to distinguish because caliche and Palouse soils that mark the surface of the Ringold Formation throughout much of the Hanford area are missing (Shannon and Wilson 1971). Both units were reported to contain gravel. No boulders were encountered in the borings (Shannon and Wilson 1971).

From an average surface elevation of 440 ft above mean sea level (msl), generalized profiles show a slight increase in relative density at 40 ft, the estimated top of the Ringold, and an additional increase at the 107-ft depth. The Ringold was described as unconsolidated silty sand and gravel above 107 ft, and a dense sand and gravel conglomerate between 107 and 217 ft from the surface (440 ft msl). The water table was reported at 62 ft from the surface (average surface elevation 440 ft) (Shannon and Wilson 1971).

2.4 CLIMATE

The Hanford regional climate is dominated by the Cascade Mountain Range and Pacific Ocean prevailing storm fronts. The climate of the Hanford Site can be classified as mid-latitude, semiarid desert (DOE-RL 1982) or mid-latitude desert, depending on the climatological classification system used. Summers are warm and dry with abundant sunshine. Large diurnal temperature variations are common during this season resulting from intense solar heating and radiation cooling at night. Daytime high temperatures in June, July, and August periodically exceed 100°F (38°C). Winters, on the other hand, are cool with occasional precipitation. During this season, Rossby waves (undulations in the polar jet stream) bring polar air masses into the area. These cold air masses occasionally cause temperatures to drop below 0°F (-18°C) (Hulstrom 1992).

The site-specific climate of the 618-11 Burial Ground generally follows the weather patterns of the Hanford Site. Topography of the 618-11 Burial Ground and immediate vicinity is fairly flat. About 40% of the winds at the site are from the south-southeast through the southwest. These are followed in frequency by winds from the northwest. Wind speeds will range between 1 to 12 mph nearly 88% of the time. The remainder of the time, wind gusts can be expected in the neighborhood of 13 to 40 mph (Glantz 1990) with an occasional windstorm exceeding 50 mph. These excessive wind speeds occur approximately once a year, primarily from November through March.

Several years of hourly, near-surface air temperature data are available from the WNP-2 monitoring station south of the burial ground. The average annual yearly temperature during 1988-90 was 54°F (12.2°C). The warmest month of the year is July, with an average temperature of 76.4°F (24.7°C). The coolest month is January, with an average temperature of 29.3°F (-1.5°C) (Hulstrom 1992).

The monitoring station shows that the wettest month is January, with an average precipitation of 0.92 in. The driest month is July, with an average precipi-tation of 0.15 in. On the average there are 130 days a year in which a trace of rain is reported, 23 days with 0.1 in. or more of rain, and 1 day per year with 0.5 in. or more of rain. Extremes in precipitation can be summed by the following information. Based on projected climactic conditions (Hulstrom 1992), the 50 year rain events could include:

- 0.53 in. of rain will fall in a 20-min period
- 0.72 in. of rain will fall within an hour
- 1.77 in. of rain will fall within a 24-hr period.

The average annual snowfall at the Hanford Site is 13.8 in. The maximum annual snowfall of 56.1 in. occurred during the winter of 1992-93. This annual snowfall amount surpassed the long-standing record of 1915-1916 of 43.6 in. (Glantz 1990). The thunderstorm season at Hanford lasts from April through September. A thunderstorm day is recorded when thunder is heard one or more times at the observing station. On average, there are 10 thunderstorm days per year. It is interesting to note that no precipitation is reported on 44% of thunderstorm days and that precipitation exceeds 0.1 in. on 20% of thunderstorm days (Hulstrom 1992).

The Hanford Site is not in a prime tornado region; there has been only one tornado observed at the Site since 1944. Since then, only two funnel clouds (not reaching the ground) were observed over the Hanford Site. Annual probability that a tornado would strike any one point in the area is only 1 in 146,000 (Hulstrom 1992).

Microclimate at the burial ground is also influenced by vegetation. The 1982 stabilization established a Siberian wheatgrass (*Agropyron sibericum*) community which serves to protect the site from erosion and reduce soil moisture. Vegetation has an important influence on the localized soil moisture balance. Evidence has shown that maximum recharge occurs where soils are kept bare (Gee 1987).

9413204.0450

2.5 HYDROLOGY

The properties, distribution, and effects of groundwater are tied to the geology, climate, and fluvial relationships present in the Pasco Basin. Vegetational influences (evapotranspiration) and artificial recharge from human activities can also be important considerations in regard to groundwater hydrology.

Natural surface water does not occur in the immediate vicinity of the 618-11 Burial Ground. Regionally, the area is drained by the Columbia River, passing the burial ground about 3.5 mi to the east. The Yakima River, a Columbia River tributary, borders part of the Hanford Site's southern boundary. The Yakima is >7 mi from 618-11 at its closest point, from which it flows generally southeast, away from the Hanford Site, to meet the Columbia. Several small springs and ephemeral streams can be found even further away along the slopes of Rattlesnake Mountain and in the Rattlesnake Springs/Cold Creek areas along the west side of the Hanford Site. These surface waters disappear into the desert at lower elevations.

The geology of the Hanford Site consists generally of confined aquifers within the Columbia River Basalt and interbeds of the Ellensburg Formation. These units are overlain by an unconfined aquifer generally in the permeable beds of the upper and middle Ringold units. The critical factor that controls the nature of the unconfined aquifer is the extent of the Columbia River downcutting that took place following deposition of the Ringold sediments. Sizable paleochannels of high permeability were formed.

Since these materials are heterogeneous, often greater lithologic differences appear within a bed than between beds. The water table is the top of the aquifer. The aquifer bottom is either basalt bedrock or, in some areas, the silt/clay zones of the Ringold Formation. Based on water table maps, groundwater flow in the unconfined aquifer beneath the burial ground is east toward the Columbia River (Newcomer et al. 1992, Kasza et al. 1992).

Water at the site occurs as precipitation falling mainly in the cooler months as was shown in Section 2.4. During this period, evaporation is lower and the moisture can infiltrate into the unsaturated (vadose) zone. During a 14 yr period, recharge at a vegetation-covered 200 Area lysimeter was estimated to be near zero (Gee 1987). However, 300 Area lysimeters that lacked vegetative cover have shown some recharge under conditions of bare coarse-textured soils (Gee 1987). When deep-rooted plants are present, even relatively coarse soils show little evidence of downward migration (Gee 1987). This emphasizes the need to understand detailed plant-water relations to accurately estimate recharge for a given set of conditions.

9413204.0451

Artificial recharge from river water pumped to Hanford's isolated facilities supplements any sparse natural recharge. Hanford Formation sediments are very permeable, and therefore can accept and disperse large volumes of water. Recent trends at the Hanford Site have tended toward reductions of discharges to the soil. For example, upgradient water levels in the vicinity of B-Pond (east of 200 East Area) have been declining in response to decreasing water discharges (Newcomer et al. 1992). Historical rises in water table elevation are much less on the Hanford Site than east of the Columbia River in Franklin County where there is widespread agricultural irrigation.

The direction of groundwater flow beneath the 618-11 Burial Ground is perpendicular to the water table elevation contours displayed in Figure 6. Gradients are greater east of the facility as the water table declines approaching the Columbia River.

Shannon and Wilson's 1971 foundation report for the WNP-2 facility adjacent to 618-11, reported the water table depth at 62 ft from an average surface elevation of 440 ft. The current depth to the water table is estimated at roughly 60 ft. This is based on an the difference between an anticipated water table elevation of 390 ft (Figure 6) and the surface elevation datum shown on the (1978) USGS Wooded Island topographical map. The USGS surface data predate additional soil added in 1982. A 1977 document listed the minimum depth to groundwater as 18 m (about 59 ft) (Brown and Isaacson 1977).

Figure 7 shows trends in water table elevations at three specific wells based on long-term data in the Hanford Environmental Information System (HEIS). Well 699-17-5 is located 1 mi north of 618-11 and has been monitored since 1951. Well 699-2-3 lies nearly 2 mi south of the burial ground, and 0.8 mi northeast of the Fast Flux Test Facility.

Figure 6. General 618-11 Area Water Table Map.

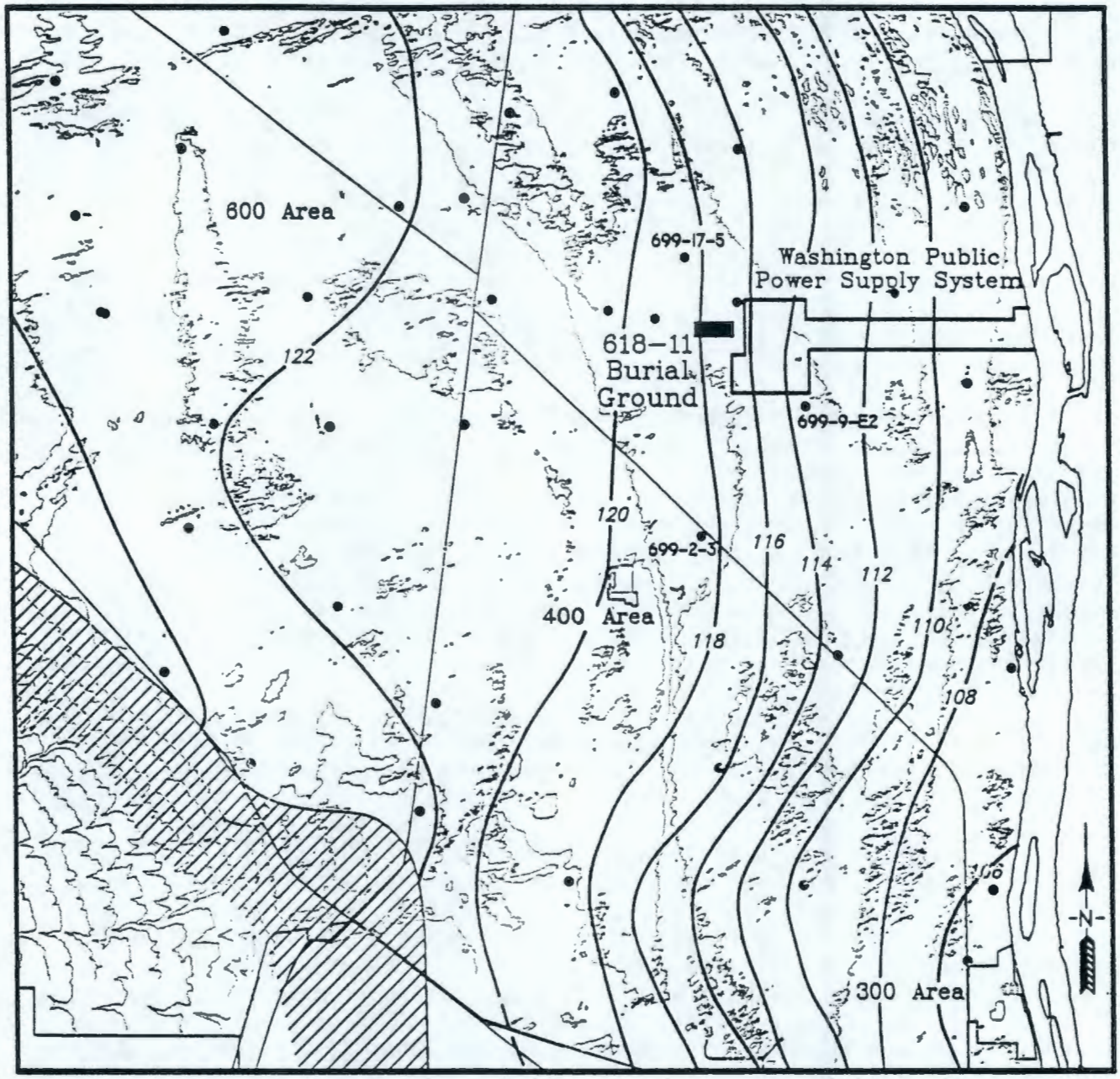

GEN\071693-E

- Monitoring Well Location
- Water Table Elevation Contour (1991) (meters above mean sea level)
- Rattlesnake Mountain

0 1 2 3 Kilometers

9413204.0452

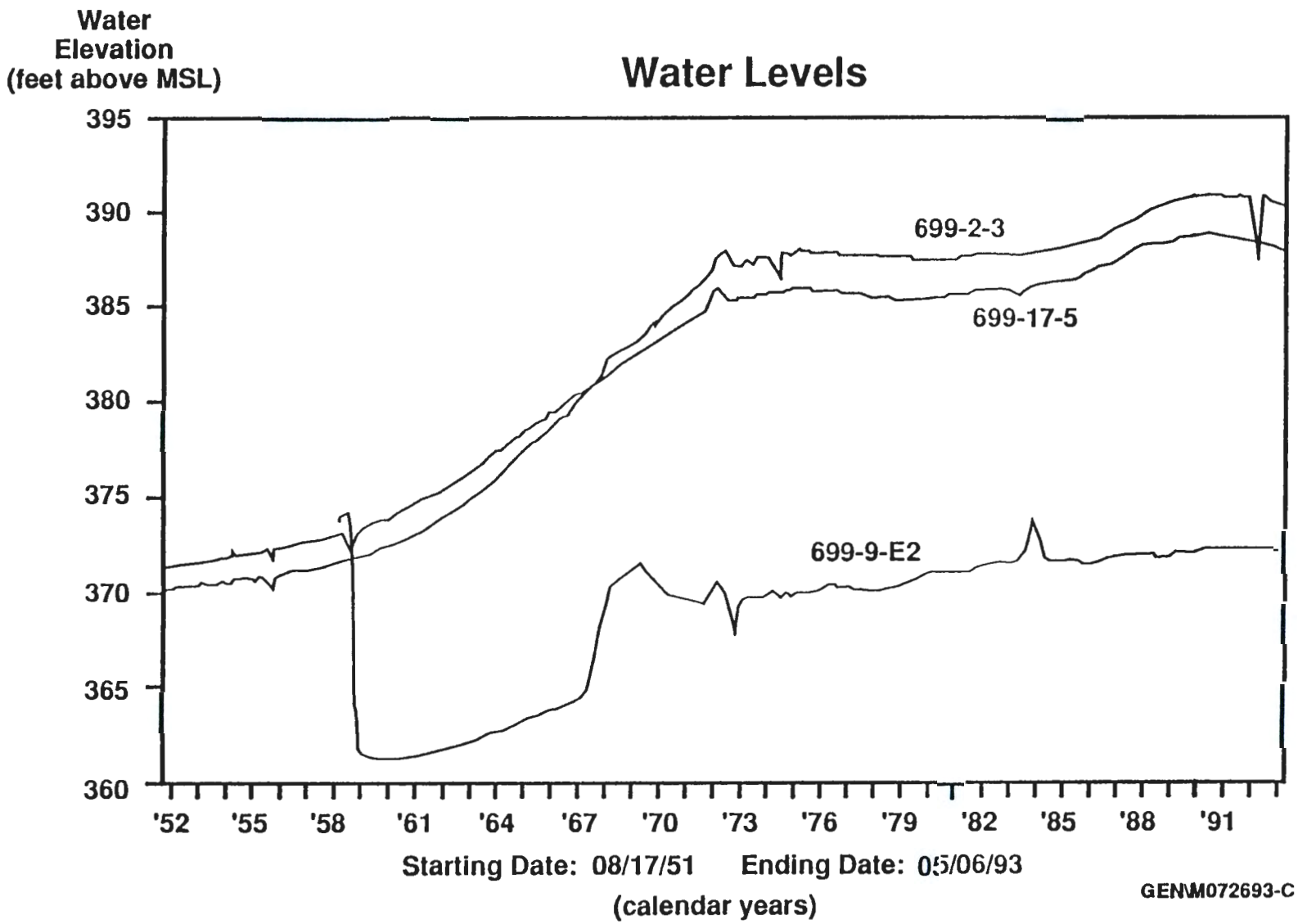

Figure 7. Water Table Elevation Trends.

Water table elevations at 618-11 may be approximated by elevations at these two wells based on contour intervals shown in *Water-Table Elevations on the Hanford Site and Outlying Areas, 1991* (Newcomer et al. 1992) and further confirmed by elevations shown in *Groundwater Maps of the Hanford Site* (Kasza 1992). The third well, 699-9-E2, is about 1 mi southeast of the burial ground and downgradient.

Cooling and service water used by the WNP-2 facility is drawn from and discharged to the Columbia River. Although WNP-2 does not actively use groundwater, several onsite wells provide backup capability. Three wells, two in the upper aquifer and one in the lower confined aquifer, were used prior to 1978 for a variety of construction purposes including drinking (NRC 1981).

Small amounts of water may be released to the ground from WNP-2 downgradient of the burial ground. The WNP-2 storm drain system releases water several hundred yards to the northwest of WNP-2 during periods of heavy runoff. Sanitary waste water is discharged to lined surface ponds about 3,000 ft southeast of the burial ground. Neither source is expected to have any impact on the 618-11 site.

9413204.0454

Due to surrounding topography, permeability of geologic materials and low precipitation, flooding, even during severe weather conditions, has not been reported nor is expected at the 618-11 site. Considerable resources were devoted to examining the suitability of the area for the siting of WNP-2 reactors. Although flash floods from severe precipitation events were ruled out, another potential source of flooding may be water from the Columbia River. Dams have effectively controlled river flow, but could fail. This possibility was examined in detail by the WNP-2 Final Safety Analysis Report.

Safety analysis performed for reactor siting made the following conservative assumptions to assess a "limiting case" effect of dam failure.

- The Columbia River was at flood stage.
- Reservoirs are full.
- A massive hydraulic failure occurs at Grand Coulee Dam.
- All downstream dams to the WNP-2 site suffer some degree of failure and release their reservoirs to the flood.

The analysis showed water would not be expected to reach the 618-11 Burial Ground site. Flow from this hypothetical flood, including allowance for wind and waves, was estimated to reach an elevation of 424 ft above msl at river mile (RM) 350 (WPPSS 1981). The Columbia River is over three miles east, and RM 350 is slightly upstream from its closest point to the burial ground.

3.0 HISTORICAL PERSPECTIVE

During the plutonium production years, Hanford's 300 Area was tasked with fuels fabrication along with fuel research, testing, and examination. The area was known as the Hanford Laboratory Operations. Fuel fabrication activities, beginning in 1943, created waste contaminated with uranium. Uranium contaminated waste was placed in low level burial grounds located adjacent to the facilities.

In 1953, the 300 Area laboratories began fuel examination and testing of irradiated fuel rods from the production reactors located in the 100 Areas. The work was conducted inside laboratory "hot cells". The cells were heavily shielded and equipped with manipulator arms for remote handling of extreme dose rate samples. Irradiated fuel rods were destructively tested for cladding failure and fuel enrichment data. Thin slices of irradiated fuel rods would be examined and photographed through a microscope in the 327 Metallurgy Laboratory. The 325 Radiochemistry Laboratory received samples from the 200 Area chemical separations process for analysis. In later years, they would isolate specific radionuclides in campaigns.

This type of laboratory analysis created highly radioactive wastes. Most radioactive liquid waste was sent to the 340 liquid disposal facility through the Radioactive Liquid Waste System (RLWS). However, some containerized high activity liquid waste along with all radioactive solid waste were sent to nearby burial sites.

Significant increases in radiation levels of laboratory waste being deposited in burial sites near the 300 Area concerned the Health Instrument monitoring group, who were responsible for assessing employee radiation doses. On their recommendation, a new burial ground was opened in 1954 in an isolated location approximately 4.3 mi northwest of the 300 Area. It was known as the 300 North Burial Ground (618-10). It contained 12 trenches and 94 pipe storage units when it was closed in 1963 (Appendix B).

Pipe storage units were constructed of five bottomless 55-gal drums welded together to form a column and buried vertically. One memo from 1961 suggests that the first pipe storage units installed at 618-10 were 14-in.-diameter well casings (Webb 1993a). A specially designed truck and flatbed trailer equipped with casks was able to be positioned over the drum opening and waste remotely deposited into the ground. When filled, or if the dose rate became too high, the unit was capped with concrete.

The 300 North Burial Ground operated until September 1963. When it closed, most Hanford Laboratory waste went to a similarly constructed site known as the 618-11 Burial Ground, which opened in March 1962 for trench burials and the new pipe storage units which became available in September 1963.

3.1 SHIPMENT DESCRIPTION

From the beginning of the Hanford Project in 1943 until early in 1960, few records were kept to document solid waste burial activities. For this reason, an exact inventory of specific waste deposited at the 618-11 Burial Ground cannot be identified. However, from an understanding of the work scope of projects and procedures used at the 300 Area laboratories, fairly accurate assumptions can be made. The lack of precise inventory creates uncertainties when trying to determine risk factors and project plans.

During the period from 1960 through 1967, disposal records were maintained that reported the shipper, radioactivity level, and waste volume. The shipper was the building or area from which the waste originated. The records identified the burial ground into which the waste was deposited and the type of container used to transport the waste. Facility work scope indicates what can be expected in the waste containers. Records did not identify specific trenches, caissons, or coordinates for burials, nor did they document dates of individual shipments.

Radioactivity levels were loosely identified by curie content. Specific waste containers were associated with each type of radioactive shipment level.

Low level waste was considered to be <10 Ci/ft^3. Low level waste containers included cardboard and wooden boxes. Low level waste was transported to the burial grounds in dump trucks or load luggers. The waste was put into open trenches and backfilled periodically.

Intermediate level waste was considered to contain between 10 and 1,000 Ci/ft^3. Inter-mediate level containers were referred to as milk pails, paint cans, concrete drums, and 5-gal waste cans. Waste in milk pails and paint cans was remotely deposited into pipe units and caissons from specially designed casks on truck trailers. Drums shielded with concrete were used to dispose of intermediate and high activity waste by facilities that did not have access to the cask system. Concrete drums also provided containment for some radioactive and TRU liquid wastes. Concrete drums and large miscellaneous objects were placed in the trenches.

High activity level waste was anything calculated to be >1,000 Ci/ft^3. The Gatling gun cans are the most common container associated with high activity level wastes. However, concrete drums, waste cans, and milk pails would sometimes contain high activity waste as well. The Gatling gun cask remotely dispensed commercial, 1-qt juice cans containing waste from a rotating chamber into the pipe units or caissons at the burial grounds. It was used to transport small items with very high dose rates.

A vehicle designed to carry a 4-in. lead shielded cask containing a 6-L aluminum milk pail was obtained in December of 1959 to transport hot cell waste from the 327 Metallurgy Laboratory to the vertical units at the burial grounds. The waste was secured in the pails with a hardened gelatin solution instead of a lid.

9413204.0456

Another cask was known as the "Gatling gun" because of its rotating cylinder design. It had 7 in. of shielding and held up to 12 1-L commercially available "juice cans". The small juice cans usually contained drain line filters from basins in the 327 Building where irradiated fuel rods were cut underwater. Small pieces of fuel were examined to determine fuel cladding failure. Sometimes fuel fragments were discarded in juice cans after testing was complete. Both casks discharged the waste remotely into a pipe unit or a caisson by allowing the payload to free fall from a chute through the bottom of the truck trailer directly to the waste unit opening (Figure 8).

The milk pail disposal system was not very efficient, because the cask could carry only one pail at a time. As production increased, as many as eight trips per day were being made to the burial site. A second cask was procured to increase waste removal. Eventually, in 1966, a new cask was designed that could hold eight commercial paint cans. The cask was transported to the waste site horizontally and raised hydraulically to a vertical position to allow the waste to drop into the caisson. The paint cans had lids, which was an improvement over the original milk pails that had no lids, although the lids often came loose during the waste disposal process.

A "concrete barrel" was a 55-gal drum with a form placed in the center. Two inches of concrete was put into the bottom of the barrel and a cylindrical form placed in the center of the barrel. The contaminated item was placed in the center of the form and 4 in. of concrete was poured around the form. Additional concrete was added to the top and the lid was attached. This type of container was buried in the trenches at 618-10 and 618-11 Burial Grounds. They often contain sealed plastic or stainless steel bottles of relatively high activity liquid laboratory waste or plutonium-contaminated liquid, due to restrictions from the 340 Liquid Waste Facility. These barrels were generated mostly from the 325 Building.

In 1964, the 325 Building began using two casks on a flatbed trailer to transport containerized hot cell waste to the 618-11 and 200 West Area Burial Grounds. They had a 1-ton cask for 1-gal waste cans and paint cans, and a 7-ton cask to transport 5-gal buckets and 15-gal cans (Figure 9).

Waste packages would often break open when dropped into the vertical pipe storage units. Frequent surface contamination occurred from the reflux of airborne particles during waste drops. As a result, a new disposal unit was conceived. Large-diameter caissons with offset chutes were installed to help contain contamination and reduce exposure during disposal activities. The first large-diameter caissons were installed in the 618-11 Burial Ground in September 1964. It is possible that some of the 50 vertical pipe storage units were abandoned in favor of using the new design receptacle and may be empty or backfilled with dirt.

Beginning in 1963, it was suggested that an effort be made to ship waste containing plutonium to the 200 Area plateau for burial (Webb 1993a). There is documentation to support shipments some 300 Area laboratory waste contaminated with high concentrations of plutonium being sent to the 218-W-4A Burial Ground trenches (200 West area) in 1963.

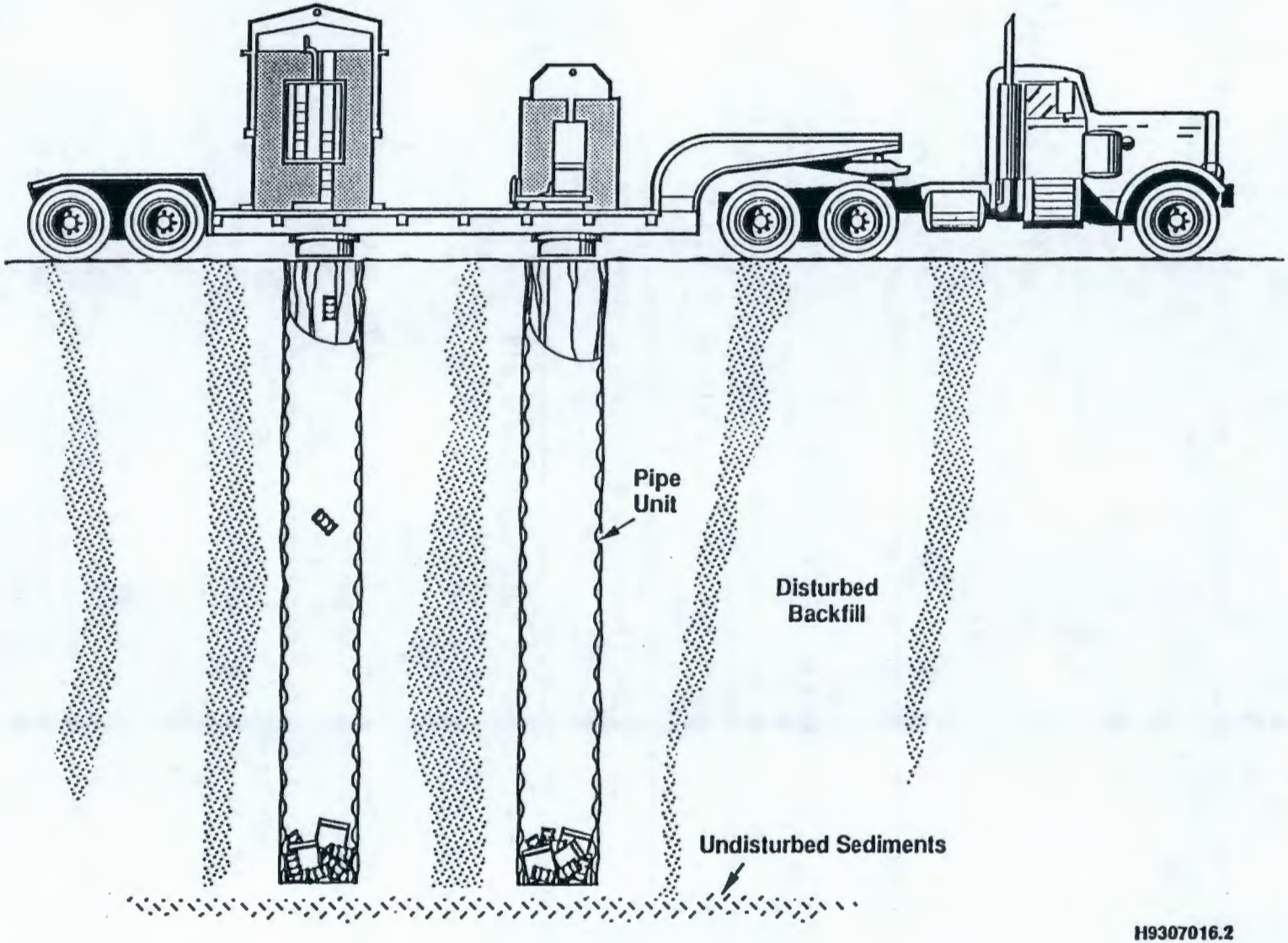

Figure 8. Remote Deposition of Waste.

Figure 9. 325-A Waste Disposal Containers.

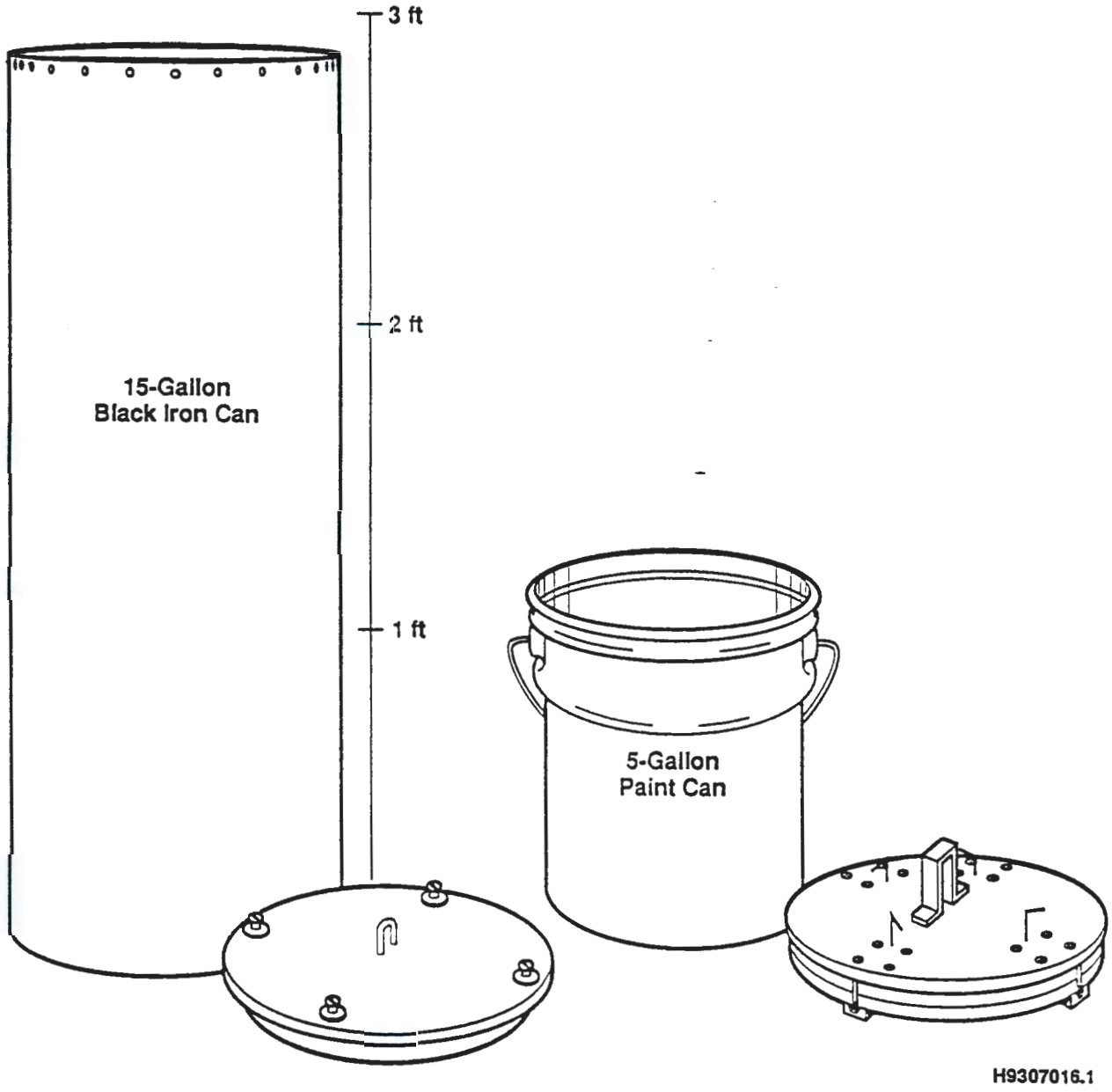

9413204.0459

In 1964, six pipe storage units and two 48-ft-deep dry wells were installed to receive plutonium-contaminated waste from the Hanford laboratories (Maxfield 1979). In 1967, new concrete caissons with filtered exhausters became operational at burial ground 218-W-4B. After 1967, all plutonium contaminated waste was sent to the 200 Area. Only the 618-10, 618-11, and 218-W-4A and -4B Burial Grounds were equipped with pipe units or caisson receptacles to receive remote-handled waste transported in the previously described cask trucks.

3.2 SHIPMENT LOGS

The 618-11 Burial Ground was operational from March 1962 through December 1967. Records of the number of waste containers and their volumes (totaled semi-annually) are available for this time period (Webb 1993b). The burial ground was deactivated in October 1962 for an undocumented reason and reopened in September 1963. During these months, the waste was diverted to the 618-10 Burial Ground. Table 3 summarizes shipments made from March 1962 to December 1967.

9413204.0460

Table 3. Shipments to 618-11 (300 Wye) Burial Ground. (March 1962 through December 1967)

Radiological Level	Total Containers		Volume (ft^3)
>10 Ci/ft^3 (in trenches)	Cardboard cartons -	33,423	150,895
	55-gal drums -	400	3,000
10 to 1,000 Ci/ft^3	Milk pails - (in pipes / caissons)	3,100	465
	Concrete drums - (in trenches)	169	1,260
10 to 1,000 Ci/ft^3 (in pipes / caissons)	5-gal pails -	87	58[a]
	1, 2, 3 ft^3 cans -	174	138
>1,000 Ci/ft^3 (in pipes / caissons)	Juice cans -	690	29.5
Miscellaneous in trenches	Steel cave -	1	72
	Wood crates -	19	876
	CWS filters -	6	48

[a]Appears to indicate volume of waste in can, not volume of containers.

3.3 RADIATION LEVELS AND CONTAMINATION INCIDENTS

Uncured irradiated fuels were remotely examined in the 327 Metallurgy Laboratory hot cells, and isotope separation activities from process solutions were done at the 325 Radiochemistry Laboratory. Both of these activities were associated with extremely high radiological dose rates. Estimates have been made that readings inside the hot cell could be in the range of 10,000 R/hr. Waste removed from the cells could have had similar dose rates. Radioactive measurements were generally taken at some distance from the source or read through the cask. "Flashes" of high dose rates were noted on radiological surveys as the waste dropped through the unshielded chute into the pipe storage units and caissons. One survey records a flash of 30 R/hr at distance of 3 ft as the waste was dumped.

Due to the type of work and research being done in the 300 Area laboratories, dose rates from the experiments progressively increased in the 1960's as compared with dose rate activity experienced in the 1940's and 1950's. Short-lived radionuclides are associated with uncured fuel. They will have undergone several half-life decays in the 25-30 yr since they were discarded. Many of these isotopes will no longer be detectable. Dose rates found in waste units today are expected to be significantly reduced.

Numerous contamination spreads and spills occurred during these types of burials over the years. Most of the incidents were reported on the radiological survey sheets and in logbooks. Some of the more significant events were documented in radiation occurrence reports. Many describe contaminated areas hundreds of square feet in size, with significant radiation levels. There are seven documented contamination incidents directly related to waste burials activities at 618-11 Burial Grounds (Appendix C and Stenner et al. 1988).

4.0 CONTAMINANTS OF CONCERN

300 Area laboratory activities produced waste with a vast spectrum of radionuclide and chemical contaminants. Based on process knowledge, contaminants expected to be found in the waste may include technetium, promethium, zirconium, uranium, americium, cesium, curium, strontium-90, carbon-14, cobalt-60, plutonium metals, and plutonium nitrates. Other contaminants to be considered are thorium, beryllium, aluminum-lithium, carbon tetrachloride, and sodium-potassium eutectic. Waste would include discarded laboratory items (i.e. rubber gloves, glassware, paper, cardboard, wipes, tygon tubing, lead bricks, plastic sheeting, plastic bags, grinding wheels, drain line filters, tools, and whole or pieces of laboratory equipment).

It is known that some waste containing plutonium was deposited at the 618-11 Burial Ground, but an exact inventory is unknown. Radiological survey records have been identified that describe plutonium contaminated items and concrete barrels being placed in the trenches (Webb 1993b). No specific information is available for remote handled packages. It has been suggested that plutonium waste with an associated high dose rate may not have been shipped to the 200 Area. This decision would have been made as a safety measure to reduce exposure by reducing the distance of the shipment and also due to contractor procedure differences.

4.1 HAZARDS OF SPECIAL CONCERN

Some elements of the buried inventory are chemically reactive in water and in air. Special precautions are required when handling zirconium, sodium-potassium eutectic, and uranium, which oxidizes to become uranium oxide. Under the right conditions they could become pyrophoric.

9413204.0462

Sodium-potassium eutectic was added to some fuel elements because of its heat transfer characteristics. It has a very low melting point, 9°F, and remains liquid at room temperature. When exposed to the moisture in air, sodium-potassium eutectic produces large quantities of white smoke and often begins to burn. The smoke contains alkali metal oxides and is very corrosive and irritating. There is also formation of superoxide, which is a powerful oxidant and also reacts with the metals. The reactions produce enough heat to ignite hydrogen gas, organic vapors, or combustible materials if present.

The 327 Metallurgy Laboratory conducted hot cell destructive testing on fuel elements containing sodium-potassium eutectic. It is assumed some sodium-potassium eutectic became part of the hot cell waste. Sodium-potassium eutectic is specifically mentioned in a milk pail cask operating procedure that was signed and approved in December 1959 (Webb 1993a). It gives instruction that no significant amount of free liquid, including sodium-potassium eutectic, should be put into a milk pail unless it is inside a sealed container. The milk pails were transported in casks to the burial grounds for remote deposition in caissons and pipe storage units. It is unknown what quantity of this alloy is actually contained in the waste inventory.

The above-mentioned sealed containers were likely to have been glass or plastic bottles with screw caps or stainless steel bottles with o-ring seals. Screw on caps and o-rings are not absolute seals. Over the years, a slow oxidation process could cause failures of the caps and rings. If spillage occurred onto other packaged waste within the caissons, the oxidation and reaction process should be completed. However, some containers may still be intact and the possibility of unreacted sodium-potassium eutectic within the waste exists.

Hydrogen gas can be generated from most any waste form that contains organic material such as plastic. Any presence of liquid organic material will most likely have evaporated, unless it is contained within an intact secondary containment. Hydrogen gas and hydroxides can be ignitable or explosive. Offgassing procedures and vented transport containers should be used as a precaution against these types of chemical properties.

TRU nuclides would require special consideration if a removal action were to take place. With uranium and TRU, there is the concern of a possible criticality. Also, most TRU have excessively long half-lives. Radiologically, their dose rates would remain essentially unchanged. However, while going through a radioactive decay process, it is possible for the dose rate of certain nuclides to actually increase as daughter products reach equilibrium with the parent nuclide. This can occur as plutonium decays to Americium-241.

The physical characteristics, chemical form, concentration, and quantity of each specific nuclide can alter the health and safety concerns. Plutonium metal is considered pyrophoric, but not when in a oxide or liquid form. However, liquid and powdered alpha particle contaminated materials are more mobile and carry an increased risk of contamination spread and internal deposition.

The chemical form determines the solubility of a nuclide. The solubility can alter the hazard factor of specific nuclides (TRU and other nuclides) by 100 times or more. The concentration and quantity are obvious factors contributing to activity risk evaluations. The toxicity of heavy metals such as uranium must also be considered. Personal protective clothing, purified breathing air and contamination containment structures are routinely necessary when encountering TRU material.

9413204.0463

4.2 CHARACTERIZATION AND MONITORING

The burial ground has routinely been surveyed for radiological contamination since it closed in 1967. Surface surveys identified frequent areas of detectable beta/gamma contamination until the stabilization and revegetation effort of the early 1980s. Deep-rooted weeds such as Russian thistle (*Salsola kali*) tended to grow on the disturbed burial ground prior to revegetation. These plants are frequently implicated in translocation of radionuclides.

Establishment of a stable grass community has reduced erosion potential and competitively hindered noxious weed growth (Siberian wheatgrass [*Agropyron sibericum*] predominates). No surface contamination or contaminated vegetation have been identified since the site was stabilized in 1982.

Pacific Northwest Laboratory undertook a series of characterization studies specific to the Hanford 300 Area burial grounds (Phillips et al. 1980). Specific objectives were to develop unique functional geophysics, geochemical, soil physics, numerical modeling, and biological methodologies to better characterize and monitor buried radioactive waste disposal sites.

Geophysical surveys, geochemical analyses, computer modeling, biological uptake investigations and field testing were performed. In 1979, core drilling beneath the 618-10 and 618-11 Burial Ground structures was completed.

Twenty-one core samples were obtained from 618-10 and two from 618-11. The only detected radionuclide in these samples not a product of naturally occurring decay chains was cesium-137. Seven samples from 618-10 and one from 618-11 had positive cesium-137 results. The concentrations ranged from 0.13 ± 0.05 to 0.34 ± 0.09 pCi/g. Results and studies suggested nonexistent or negligible migration of radioactive waste into the geohydrologic system. The report concluded that no significant health or environmental hazards were identified from existing 300 Area burial grounds.

DOE performed a preliminary assessment/site inspection (PA/SI) of 618-11 in conjunction with an assessment of 646 Hanford waste sites. Sites were ranked using the 40 CFR 300 Hazard Ranking System (HRS) methodology and results were published in *Hazard Ranking System Evaluation of CERCLA Inactive Waste Sites at Hanford* (Stenner et al. 1988). The HRS evaluation methodology scored sites according to evidence of releases to air, groundwater, or surface water. Solid waste burial grounds routinely scored low in the ranking. This was a result of solid waste disposal sites not having had any direct or circumstantial evidence of any releases. The 618-11 Burial Ground scored 0.0 based on lack of data. Any releases identified in future monitoring activities represent a potential hazard not identified by the HRS migration scoring.

9413204.0464

A network of monitoring wells specifically designed to measure possible effects of the 618-11 Burial Ground does not exist. The closest known groundwater well to the site, 699-12-4D, is situated approximately 125 yd west of the burial ground. This well was completed in March 1982 (McGhan 1989). It is upgradient of the burial ground based on the general flow beneath the site. It was used to irrigate the site for several weeks in the summer of 1982 for the purpose of establishing a suitable vegetative cover. Results for any water samples taken from this well have not been located.

The closest groundwater wells in the general downgradient direction from the site are those on property used by WNP-2. Three groundwater wells are known to exist: 699-12-1A, 699-13-1A, and 699-13-1B. Well 699-12-1A is a deep well to basalt; the latter two are in the unconfined aquifer. Various sources list additional groundwater wells at the site, but appear to conflict with other sources.

The *Final Environmental Statement, Hanford Waste Management Operations* (ERDA 1975) shows groundwater wells 13-1A, 13-1B, 12-1, 11-1 and 11-0 at WNP-2. Both 11-1 and 11-0 are more distant from the burial ground than the former three. Well 12-1A is a groundwater well 343 ft south and 1,402 ft east of 618-11 (coordinates and the location given by McGhan [1989]). Likewise, well 13-1A is roughly 350 ft north and 1,240 ft east of the burial ground (McGhan 1989). Well 13-1B lies about 50 ft north and 1,430 ft east (McGhan 1989).

The HEIS lists at least one additional WNP-2 area groundwater monitoring well, 699-12-2A, which would be located about 462 ft due east of the southeast corner of the burial ground based on coordinates given by McGhan (1989). Numerous other wells can be found more distant from the burial ground.

Some wells have associated groundwater analytical data. A search of the HEIS, concluded February 4, 1993, sought information concerning chemical and/or radiological analyses associated with 72 wells/boreholes within a rough 1-mi radius. Other investigation boreholes are known to have existed in the approximately 12,000- by 13,000-ft area (Figure 10). These were unlikely to have any associated groundwater data. Geologic and seismic study of the area has resulted in numerous deep and shallow boreholes in the general area of the site.

No contamination attributable to the burial ground has yet been identified. Of the 72 wells/boreholes, only those listed in Table 4 were found to have any groundwater data in the HEIS database. Most of these data consist of fragmented constituents and time periods, not long-term, routine monitoring using a standard list of analytes and methods. Some of the data are historical and not validated equivalent to current practice. Many data for these wells consist of tritium and nitrate measurements, through 1981, due to interest in these constituents from a Hanford Site-wide monitoring perspective. Plumes of each are known to extend from 200 East Area activities and appear to be diminishing in the 1981 data. Other water analyses have been intermittently performed.

9413204.0465

Table 4. HEIS Groundwater Data for Wells Within 6000 ft of the 618-11 Burial Ground.

Well name	Year of analysis	Total number of results*	Number of gross alpha results*
699-11-1A	1973	4	0
699-12-4B	1984-88	246	2
699-13-1A	1973-81	99	0
699-13-1B	1973-81	85	0
699-13-1C	1980-92	100	0
699-14-E6P	1966-82	69	0
699-15-E6Q	1967-81	83	0
699-14-E6R	1967-81	60	0
699-14-E6S	1967-81	62	0
699-14-E6T	1966-88	101	1
699-17-5	1951-92	608	13
699-9-E2	1958-87	571	15

* Search for sample results conducted 8/3/93.

Figure 10. Wells Near 618-11 Burial Ground.

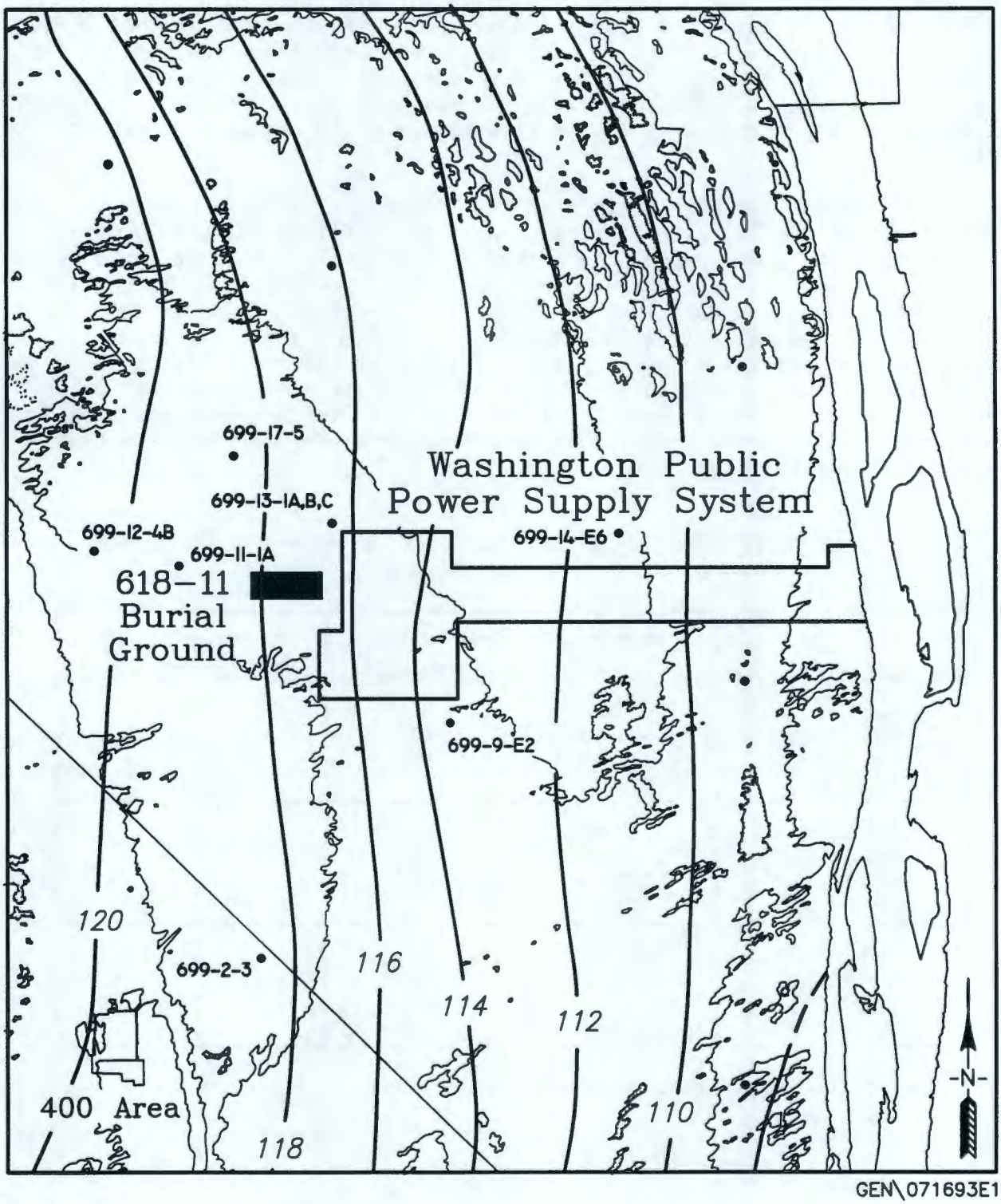

• Monitoring Well Location

— Water Table Elevation Contour (1991)
(meters above mean sea level)

0 1 2 3 Kilometers

9413204.0466

Today, the 618-11 Burial Ground continues to be routinely surface monitored for radiological contamination annually with the Mobile Surface Contamination Monitor (MSCM). A special survey using the Ultra Sonic Ranging and Data System (USRADS) was done in March 1993. No significant radiological readings or dose rates were detected in this survey. The surface remains radiologically uncontaminated. Environmental monitoring will include soil and vegetation sampling begining in 1993.

4.3 CONCEPTUAL SITE MODEL

This Conceptual Site Model (CSM) represents the environmental and exposure pathways present under the current conditions assessed by this ERA. Potential future conditions at the 618-11 burial ground will be addressed as part of the RI/FS process. This CSM is generally based on existing information from monitoring activities. Lack of information identifies a data gap that must be addressed to reduce uncertainties in the understanding of contaminant fate and transport.

To characterize the potential for exposure at the 618-11 Burial Ground, the site was evaluated to establish the existence of completed and potential exposure pathways. The evaluation included identification of contamination sources, release mechanisms, environmental transport media, exposure routes, and receptors. All five components of an exposure pathway must be present to consider a pathway complete. A completed pathway indicates that a potential for adverse effects to human health and the environment exists.

4.3.1 Source

The source of contamination at the 618-11 burial is waste in unlined trenches and bottomless pipe units and caissons. The waste generated from the 300 Area Hanford Laboratory Operations may contain a variety of hazardous and/or radioactive containerized liquid and solid waste.

An exact inventory of the waste deposited at the 618-11 Burial Ground is not available due to a lack of documentation recording specific burial activities. Records exist that keep an account of the number, type, and volume of containers shipped, but no specific information related to the contents. This represents a data gap in our understanding of the contamination within the units.

From process knowledge of the facilities that disposed waste at the 618-11 Burial Ground, potential contamination may include a variety of radionuclides, chemicals, and reactive material that could result in physical, chemical, and radiological hazards should an exposure occur.

4.3.2 Release Mechanism

Containers disposed of to the trenches included cardboard cartons, wooden boxes, cement-lined drums, and large miscellaneous contaminated items. Containers disposed to the pipe units and caissons include aluminum pails, paint cans, 5-gal buckets, 15-gal cans, and 1-quart "juice cans." Containers often ruptured during free fall into the pipe units and caissons causing contamination spreads within the units resulting in surface and subsurface contamination. There is a potential for this contamination to infiltrate the soil from the units. Potential release mechanisms could include fugitive dust, biota intrusion and a direct infiltration from the units to the surrounding soil.

4.3.3 Transport Media

9413204.0468

Two potential environmental transport pathways were identified at 618-11 Burial Ground (Figure 11). One is contamination infiltration into the soil and the other is contamination migration from the soil to the ground water.

Contaminant infiltration from the buried waste into the soil has the potential to reach the surface by way of vegetation uptake or fugitive dust related to a waste intrusion. The burial ground was surface-stabilized in 1982, with several feet of clean dirt, and revegetated. The surface is regularly radiologically surveyed and remains uncontaminated. There is no evidence of biological intrusion (Schmidt 1992). Therefore, under the current land use conditions, these transport pathways can be eliminated form consideration with respect to the ERA.

Soil contamination has the potential to migrate downward to the water table. Due to the semi-arid desert climate at the site and the vegetation cover, there is insufficient moisture to drive contaminant migration. The potential is low that a migration has occurred.

The possibility that a contamination migration has occurred needs to be confirmed or rejected and future potential migration should be monitored. There are groundwater monitoring wells in the vicinity of the 618-11 Burial Ground, but none directly adjacent. Isotopic analyses from the existing wells are almost nonexistent. This represents a data gap in understanding contaminant migration from the burial ground to the groundwater. As a result, groundwater is currently considered a potential transport medium.

4.3.4 Exposure Route

Exposure routes include ingestion, inhalation, dermal absorption, external radiation exposure and biological exposure. Currently, no exposure routes exist.

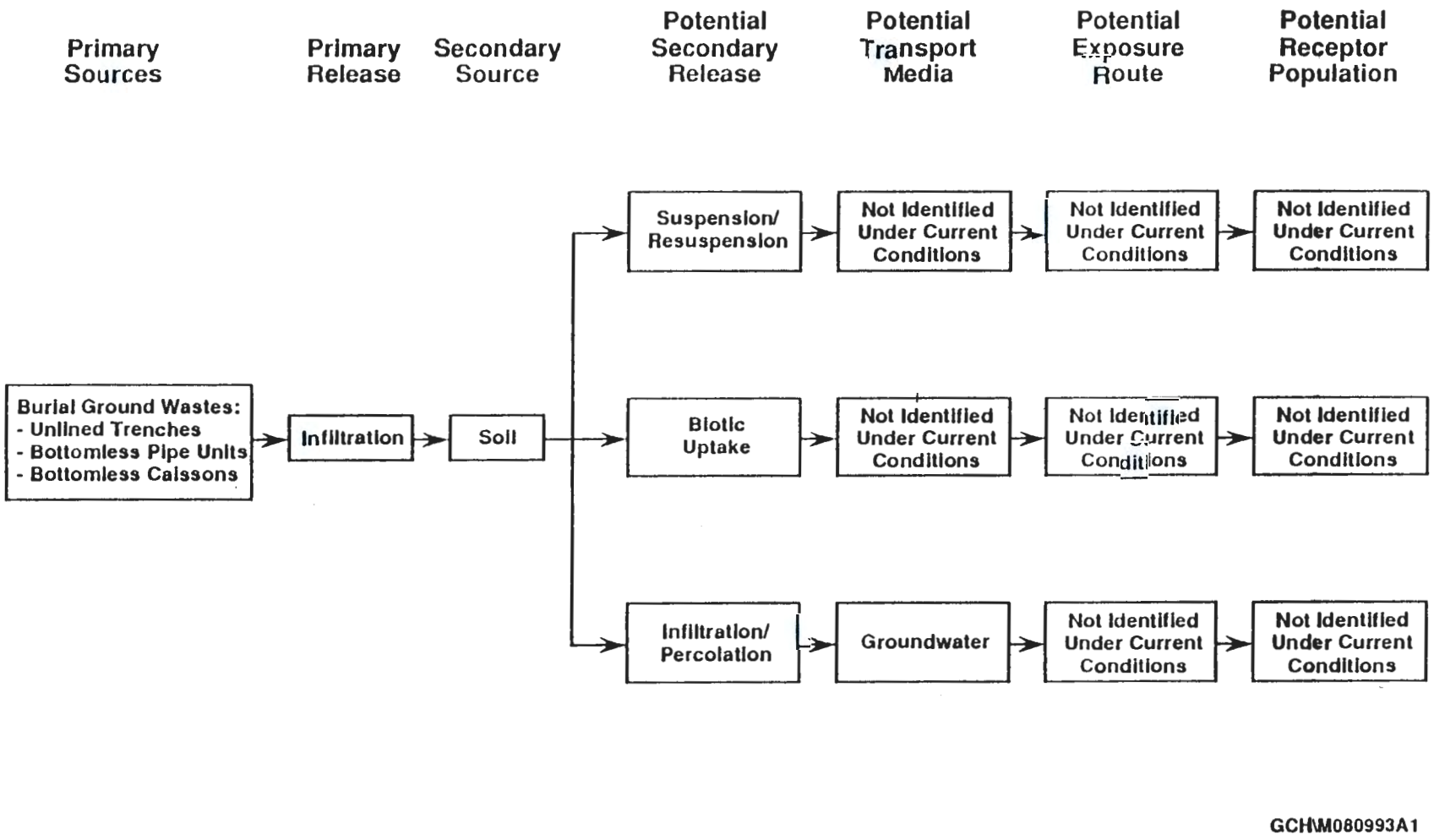

Figure 11. Conceptual Model.

4.3.5 Receptor Population

Receptor populations are generally identified on current and future land use conditions. Under current conditions assessed for this ERA, possible receptors are site workers, trespassers, and the adjacent operating power plant employees and visitors. Currently, exposure pathways to contaminated media have not been identified at 618-11. Therefore, the potential for exposure to contaminants is low. Potential future exposures may exist and will be addressed as part of the RI/FS process.

5.0 APPLICABLE OR RELEVANT AND APPROPRIATE REQUIREMENTS

9413204.0470

A key feature in the CERCLA cleanup process is determining what the required level of cleanup will be to ensure adequate protection of human health and the environment. CERCLA directs consideration of environmental requirements that are either applicable or both relevant and appropriate.

The following sections provide a discussion of potentially applicable or relevant and appropriate requirements (ARARs) pertinent to the ERA. A basic discussion of ARARs is provided in Section 7.5 of the Action Plan in the *Hanford Federal Facility Agreement and Consent Order* (Ecology et al. 1989, Attachment 2).

"Applicable requirements" are those cleanup standards, standards of control, and other substantive environmental protection requirements, criteria, or limitations promulgated under Federal or State law. These requirements specifically address a hazardous substance, pollutant, contaminant, hazardous waste, hazardous constituent, remedial action, location, or other circumstance at a site.

"Relevant and appropriate requirements" are those that do not meet the definition of applicable requirements, yet pertain to problems or situations similar to those encountered in the cleanup effort at a particular site. Such requirements must be suited to the unit under consideration and must be both relevant and appropriate to the situation.

Article XIII of the *Hanford Federal Facility Agreement and Consent Order* requires that interim actions attain ARAR to the greatest extent practicable and be consistent with and contribute to the efficient performance of final response actions (Ecology et al. 1989).

Policies and programs to protect the health and safety of workers and the public must be assured. Proposed activities will be evaluated for radiological and toxicological risks in accordance with DOE Order 5480.21,.22 and .23 prior to implementation. All actions will be subject to appropriate safety controls identified by the safety process.

5.1 POTENTIAL REQUIREMENTS

Compliance with ARARs is required when hazardous substances, pollutants, or contaminants are to remain onsite as part of a final remedial action. The remedial investigation/feasibility study (RI/FS) process identifies the cleanup standards and ARARs that will be applied during the final remediation in an operable unit. Section 7.2.2 of the *Hanford Federal Facility Agreement and Consent Order* Action Plan lists the identification of potential ARARs as a specific scoping activity to be addressed in each RI/FS operable unit work plan (Ecology et al. 1989, Attachment 2). Such activity and planning will result in an overall management strategy for each operable unit. The work plan for the 300-IU-1 Operable Unit, which includes 618-11, has not been drafted.

Potential ARARs or to-be-considered (TBC) criteria may be among the environmental statutes, regulations and orders cited by Westinghouse Hanford Company (WHC) in the *Environmental Compliance Manual* (WHC 1988).

9413204.0471

5.2 ANTICIPATED MEDIA CLEANUP REQUIREMENTS

Soil cleanup standards for hazardous substances have been established by the state (WAC 173-340). Interim actions (including ERA) conducted before selection and completion of the final cleanup are not required to attain the final cleanup standards (WAC 173-340-430). This approach is consistent with the EPA in allowing ERA to attain a negotiated standard or level of control before completion of the final site remediation. There are no specific federal cleanup standards or chemical-specific ARARs for compounds in soil (hazardous or radioactive) except for the EPA standards for lead and radium.

Fugitive radioactive dust generation during potential actions and stabilization of any remaining surface radioactive contamination is a prime concern, particularly when dealing with TRU elements. As previously stated, the surface of the burial ground is stable and uncontaminated. Safety is a prime concern to the DOE. Actions must be consistent with DOE orders for radiological protection. Potential normal emissions shall be subject to the substantive standards of the Washington Clean Air Act, Chapter 70.94 RCW, and Washington Department of Health regulations.

Attainment of the groundwater standards is not currently applicable for the ERA. Liquids generated by the ERA will be handled in accordance with this proposal and appropriate site procedures. Should groundwater monitoring wells be constructed, procedures will be consistent with applicable sections of the Water Well Construction Act, Chapter 18.104 RCW, and its implementing regulations.

5.3 WASTE CHARACTERIZATION AND STORAGE REQUIREMENTS

Waste characterization requirements for safe handling, shipment, and interim storage are a major concern. The HDW-EIS Record of Decision confirmed suspect TRU waste should be removed from the 618-11 Burial Ground. Characterization and treatment were to be performed at a Waste Receiving and Packaging (WRAP) facility. A comparable facility at Hanford is not anticipated to be operational before the year 2007. Long-term interim storage was not considered in the HDW-EIS. The current Hanford solid waste acceptance criteria requires detailed waste characterization prior to shipping and storage. It will be difficult to acquire this information without a facility designed for remote-handled TRU material. Negotiated compliance requirements and schedules would foreseeably be necessary prior to implementation of any removal action.

5.4 SHIPPING AND PACKAGING REQUIREMENTS

9413204.0472

A discussion of characterization, storage, and transportation regulations is relevant to any action requiring relocation of burial ground contents. Appendix D provides a more detailed account of this subject.

The U.S. Department of Transportation (DOT) has the overall responsibility to regulate the packaging and transportation of all hazardous, including radioactive, material. The responsibilities include developing an overall safety standard for transportation, packaging, classification, marking, and labeling. Radioactive waste payloads may be classified according to hazard class, Low Specific Activity (LSA), Type A, B, etc. (49 CFR 173).

The DOT provides performance specifications for Type A, B, and LSA packaging. These requirements are specified in Title 49, Code of Federal Regulations (CFR) 173, Subpart I.

The DOE may design, procure, and certify its own Type B and fissile packaging. The authority for DOE to certify its packaging is granted based on the premise that the DOE-certified packaging is designed and constructed in accordance with the requirements of 10 CFR 71 [49 CFR 173.7(d)]. DOE Order 5480.3, *Safety Requirements for the Packaging and Transportation of Hazardous Materials, Hazardous Substances, and Hazardous Wastes*, establishes safety standards for packaging and transportation. The order basically states that the DOE and its contractors must use DOT/NRC/DOE-certified packaging for transporting radioactive material.

At Hanford, onsite packaging and transfer of radioactive material is accomplished under DOE-RL Order 5480.1, Change 1, Chapter III. The Order directs RL and its contractors to use DOT/NRC/DOE-certified packaging or packaging that provides safety equivalent to DOT/NRC/DOE packaging for technical and economic considerations. As such, the safety for onsite packaging and transfer is based on equivalency to the offsite transportation regulations and is implemented in *Hazardous Material Packaging and Shipping* (WHC 1988b).

The equivalency is a tradeoff between the regulatory performance requirements and the actual onsite transport conditions. It is documented in a safety analysis report for packaging (onsite) as a basis for approval of a packaging. The current practices to demonstrate equivalent safety use a combination of packaging performance and placement of operational controls, which may be based on accident frequency and dose consequence analyses. Note that the use of such packaging will be restricted to onsite.

Given the nature of the waste anticipated to be buried at the 618-11 Burial Ground, certified Type B shipping casks and containers may be needed to move the waste to the 200 Areas. Hanford already possesses a functioning railroad system. It would be sensible to make use of the railroad during transport for several reasons. One is isolation from traffic and occupied areas. Another is faster shipping time. Also, weight restrictions on pavement needs to be considered. For these reasons, the package design chosen to accommodate this waste should be compatible with rail transfer.

9413270.0473

6.0 DESCRIPTION OF ACTION ALTERNATIVES

Alternatives were developed to meet the intent of the ERA process, i.e., potentially appropriate responses to the release or the threat of release of CERCLA-regulated substances. DOE prepared this 618-11 ERA proposal in response to a request from Ecology and the EPA (Appendix A). An ERA is to abate, prevent, minimize, stabilize, mitigate, or eliminate the threat to public health or welfare or the environment.

ERA non-time critical hazard removal actions are those where initiation of removal cleanup or stabilization actions may be delayed for 6 mo or more following approval of action memorandum. (The lead agency action memorandum is the primary document substantiating the need for a hazard removal response, identifying the proposed action and explaining the rationale.) Such actions are not to be confused with responses to imminent and substantial endangerment to the public health, welfare, or the environment because of an actual or threatened release. In those cases, neither the specified abatement method nor the proposal for abatement is subject to the public comment process (Ecology et al. 1989, Attachment 2).

This ERA requires preparation of an EE/CA. The EE/CA is an analysis of action alternatives. In this report, which includes an EE/CA, each option is described to meet the aim of evaluating among ERA alternatives.

One of the critical steps in development of the EE/CA is the identification of hazard removal action objectives. These define the "why," "what" and "when" of an action and serve to focus limited resources. When developing situation-specific objectives, statutory limits on hazard removal actions, scope, scheduling and associated criteria and standards must be considered. Statutory requirements mandate ERAs be performed pursuant to the authorities under CERCLA and Section 311 of the Clean Water Act. ERA removal actions are generally limited by statute to $2 million and 12 mo. These limits are reflected in Subpart E of the NCP, March 8, 1990.

Although not strictly applicable to the DOE-financed removals, these limits are later considered in the recommended action selection. Actions taken by federal facilities are limited by Section 120(a) of CERCLA which states, "No department, agency, or instrumentality of the United States may adopt or utilize any such guidelines, rules, regulations, and criteria which are inconsistent with the guidelines, rules, regulations, and criteria established by the [EPA] Administrator under this Act." Stated limits apply only to implementation of the hazard removal action itself and not CERCLA 104(b) activities such as the preparation of the EE/CA. Two types of exemptions, the "emergency" waiver and the "consistency" waiver, also exist.

The overall ERA objective is to promptly select an appropriate hazard removal action that minimizes potential releases from the 618-11 Burial Ground.

Potential hazard removal actions, as described in the NCP, include actions that have been routinely taken in conjunction with the use of the site for radioactive waste disposal. These actions include site stabilization, use of fencing and warning signs, and institutional control.

The NCP specifies hazard removal actions may involve physical removal of drums, barrels, tanks, or other bulk containers when they contain or may contain hazardous substances or pollutants or contaminants, and where such action will reduce the likelihood of spillage; leakage; exposure to humans, animals, or food chain; or fire or explosion. Likewise, the NCP states removal actions may use containment, treatment, disposal, or incineration of hazardous materials where immediately necessary to reduce the likelihood of human, animal, or food chain exposure. Provision of alternative water supply is another type of removal action specified in the NCP, where immediately necessary to reduce exposure to contaminated household water and continuing until such time as local authorities can satisfy the need for a permanent remedy.

Potential options were formulated to address a range of goals consistent with the overall ERA objective. Potential options initially considered for the ERA are summarized in Table 5. These option/goal combinations were framed into alternatives, including a No Action alternative. Alternatives are described in the following sections.

6.1 NO ACTION

The ERA No Action alternative is to leave the burial ground in its present state pending a future retrieval action per the 1988 EIS Record of Decision. The site maintenance and surveillance practices would continue until an appropriate facility to sort, process, and repackage waste becomes available as described in the HDW-EIS. Hazard removal via the RI/FS process would be implemented on a time schedule consistent with the Tri-Party Agreement ranking of the operable unit or subsequent negotiated changes. A WRAP or similar facility would support future waste processing activities.

9413204.0474

Table 5. Potential ERA Options/Goals.

Options	Goal	Process Description	Comments	Retain
Sustain present controls (No Action)	Defer intrusion and maintain containment	Continue routine waste management procedures	Remedial action performed via RI/FS or other processes consistent with exiting decisions.	Yes
Capping	Prevent infiltration	Placement of an interim cover over buried wastes.	Interim stabilization 1982. Barrier intact. Possible future application.	No
Vertical barriers	Retard horizontal migration	Grout curtain, sheet piling, freezing, etc. to prevent lateral contamination migration.	Very low potential for lateral migration.	No
Horizontal barrier	Retard vertical migration	Barricade constructed beneath waste to impede migration.	Low potential for downward migration. Potential to form perched water table closer to waste. Low technical feasibility without mining.	No
Encapsulation	Surround with another barrier	Grouting waste in place.	Inconsistent with HDW-EIS removal decision.	No
Physical removal and storage	Relocation to await processing	Design, build/acquire containment and equipment to temporarily relocate poorly characterized, disposed waste	Expensive and unproven but driven by HDW-EIS and site nomination for ERA.	Yes
Preclude use of local groundwater	Inhibit potential exposure pathway	Forbid use of wells within a 1-mi radius for potable/sanitary water	Groundwater contamination from burial ground not known. Possible future application.	No
Feasibility demonstration	Implementation experience	Prove removal technology.	Allows cost-effective scale-up to full retrieval	Yes
In situ vitrification	Change waste characteristics	Electrical resistance heating glassifies waste	Uncharacterized waste in containers unsuitable for current technology. Possible future application.	No
Homogenize buried materials & remove mixture	Change waste characteristics for removal	Grind waste and mix with soil	Facilitate handling and reduce pockets of high activity. Safety concerns.	No
Enhance onsite characterization	Better waste management decisions	Provides information related to waste characteristics/ migration	To be performed as part of the RI/FS process. Possible future application.	No
Enhance monitoring	Better waste management decisions	Provide environmental data	Determine existing conditions and detect changes	Yes
Chemical treatment	Change waste characteristics	Treatment in situ to render less hazardous	Waste is heterogeneous, not well characterized and process is not applicable to primary hazard.	No

9413204.0475

A geologic repository, presumably the Waste Isolation Pilot Plant would ultimately receive the certified TRU fraction. The low-level fraction would be buried on the 200 Area plateau. The burial ground would continue to be monitored by surface radiological surveys and deep-rooted vegetation controlled. Government ownership controls would minimize public encroachment. Based upon the current information, there would be no change in the potential hazards to human health or the environment from this site.

6.2 INCREASED MONITORING

Available information on the potential migration of contaminants from the 618-11 Burial Ground is based upon groundwater wells moderately distant from the site. Monitoring wells at or near the perimeter of the burial ground do not exist. A preliminary study (including radionuclide analyses of sediment samples collected beneath 618-11) suggested little or no contaminant migration had occurred (Phillips et al. 1980). Historically, analysis of groundwater in this general area of the Hanford site has concentrated mostly on the tritium and nitrate plumes associated with previous 200 Area liquid waste disposal practices. Although no groundwater contamination from disposal of solid waste at the 618-11 Burial Ground has been identified, the groundwater monitoring data is limited (see Section 4.2).

9413204.0476

This alternative proposes a ground water monitoring plan that establishes four new wells adjacent to the perimeter of the burial ground. The top of the unconfined aquifer would be monitored. The current direction of the groundwater flow is to the east. One well would be located upgradient, on the west side of the burial ground. The approximate proposed Hanford Site well coordinates for the upgradient well are N12428, W3661. Three wells would be located in a row along the east side, downgradient of the water flow. Approximate proposed Hanford Site well coordinates for downgradient wells are N12428, W2531; N12338, W2531; and N12248, W2531. Exact well locations are dependent on field inspection. Drilling would be accomplished with cable tool equipment. Soil samples would be collected during the drilling process at a minimum of 10-ft intervals. They would be examined for soil physical properties and radiological constituents. In areas where contamination is indicated, samples would be collected for radiological and hazardous chemical constituent analysis.

Groundwater sampling, analysis, and water level measurements would be conducted quarterly to develop seasonal data. The first quarter sample would be analyzed for WAC 173-303-9905 Appendix IX constituents consistent with groundwater analysis schemes presented in SW-846 (EPA 1986). Additional analyses would include gross alpha, gross beta, and gamma spectroscopy. Further isotope specific analyses would be performed as needed based on initial results. The following three quarterly samples would be analyzed for drinking water parameters, groundwater quality parameters, groundwater contaminant indicator parameters, and the contaminants of concern identified in the first quarter sample results. Analyses after the first year may be reduced or expanded dependent on new information, previous sample results and a qualified understanding of the Hanford hydrogeologic system.

Data would be collected during and after drilling of the monitoring wells that would be used to characterize the burial ground site. The general types and methods of data collection may include: water level measurements with depth, aquifer testing, determination of groundwater flow paths, and data interpretation. Water level measurements collected during drilling would help to determine if perched zones are present and/or any vertical hydraulic gradients. Groundwater flow paths would be confirmed from water level measurements collected from the monitoring well network. All data, both geologic and hydrologic would be integrated during the RI/FS process to form a conceptual model of groundwater flow at the burial ground.

6.3 REMOVAL AND MONITORED STORAGE

The HDW-EIS Record of Decision and selection of the site for an ERA proposal suggest a physical waste removal option must be developed for consideration. Under this action alternative, containers, breached containers, and waste placed directly into the burial ground would be physically removed to the 200 Area plateau. There is a lack of proven physical removal techniques for 618-11 Burial Ground wastes. The detailed design of equipment, training and procedure development would precede the actual removal. All major phases of the relocation would necessitate approval of written plans and procedures. Any transuranic waste at 618-11 was unsegregated at the time of internment. Retrieval of the entire contents of the burial ground would be necessary to implement the HDW-EIS decision (53 FR 12449, 1988) to remove the suspect TRU-contaminated "site" for processing and disposal. If identified, surrounding highly contaminated soil would also be removed as part of this alternative, but dilute traces of contaminants may remain beneath the surface. Further remedial action could be exercised via other processes, for instance, an RI/FS, and if a remaining inventory poses sufficient risk, soil at the site may be treated to further reclaim the site.

Estimates of radionuclide content are required for both shipping and solid waste acceptance. Radiological field surveys can only be used to assess radionuclide contamination and dose rates. Field characterized low-level waste, such as soil and debris, could be sent to the 200 Area low-level burial grounds or storage facilities if waste acceptance criteria can be met. Observation and field characterization techniques would be relied on to provide characterization data. Some retrieved solid wastes may not be amenable to analysis by field techniques or by standard EPA solid waste methods. Large, samples of radioactively contaminated material may pose hazards during shipping, sample preparation, analysis, and disposal. Laboratory capacity to handle high-activity, alpha-emitting wastes may not be available. Furthermore, even when laboratory data could be generated for certain solid waste samples, the data may not be *representative* if the packaged waste is very heterogeneous.

It is an assumption of this option that waste requiring further characterization and/or treatment could be placed in interim storage on the 200 Area plateau. Partially characterized mixed wastes would be managed according to their identifiable characteristic hazards. Both mixed wastes and suspect or confirmed transuranic wastes would require future processing outside the scope of the ERA. The stored waste would be routinely monitored for radiological and chemical contaminant migration or evidence of physical changes (e.g. bulging drums or corrosion). Maintenance of the storage facility would be provided as necessary.

Each of the three types of waste units, (trenches, caissons, and pipes), requires individual engineering strategies.

6.3.1 Removal of Trench Wastes

9413204.0478

The trenches are known to contain large volumes of relatively low-level radiologically contaminated solid waste. The bulk of the inventory consisted of cardboard waste boxes, but also included large or heavy objects which will require special sizing equipment and/or packaging. Isolated objects of higher activity and transuranic containing wastes were likely placed in the trenches, often in concrete drums.

Equipment and receptacles capable of handling large diverse objects would be required for retrieval. Shielded, routine excavation equipment and standard TRU waste packaging is proposed for consideration. Fully telerobotic equipment could be used for trench wastes, but was eliminated from further consideration because it would require considerable innovative development activity inconsistent with the short-term nature of ERA. The selective use of proven telerobotic equipment would be considered in detailed design. However, there is currently no known project where such equipment has been used to remove a comparable radioactive waste burial ground.

For this alternative, the top 6 ft of soil is assumed to be removed in bulk. Bulk soil volumes removed during excavation would be sampled and, if contaminated, trucked to the 200 Area low-level waste trenches. For cost estimates, fifty percent of top 6 ft is presumed to be contaminated as low-level waste. The clean overburden would be reserved and used to backfill the emptied trenches. Waste and soil removed from the trenches would be packaged in large TRU boxes. For cost estimates, it is assumed the TRU boxes would be moved by rail to the solid waste storage facilities on the 200 Area plateau.

The alternative is assumed to require a large movable containment structure. The enclosure would be constructed to move along the length of the trench as operations proceed. It should be large enough to allow heavy equipment limited movement within the structure. The structure would provide a weathershield and minimize the risk of significant contamination release from the operation. Fugitive dust within the facility would be minimized via operational procedures, ventilation systems, "greenhouses," dust precipitators, and dust suppressants (water, fixatives, and geotextile fabrics). For comparative purposes, cost estimates were made for a 140- by 200-ft sprung structure. An assumption of this estimate is that excavation hazards can be sufficiently identified and controlled without DOE Safety Class 1 hardware.

Heavy construction-type equipment would excavate the soil and waste and place it into containers. Large TRU radioactive waste boxes are available that have a capacity of about 300 ft^3 each. They are limited to a maximum of 1,000 g of TRU per box. Records show at least 150,000 ft^3 of waste was disposed to the three trenches. This volume would require 500 boxes for waste alone. However, the trench volumes and thus the potentially contaminated soil volume vastly increase the volume to be removed. For cost estimates, this alternative assumes three trenches with contaminated soil/debris zones 850 ft long x 42 ft wide (top) x 21 ft deep (max). Each contaminated zone is assumed to have a triangular cross-section. An 18% swell factor is used for excavated volume. Significant soil volume would be excavated and would increase the total required boxes to approximately 4400.

All equipment entering the facility has the potential to be added to the radioactive waste stream. Reuse of the building and reasonably salvageable pieces of equipment at future sites would be practiced to the extent possible.

9413204.0479

6.3.2 Removal of Caisson Wastes

Waste contained within the caissons is assumed to be primarily remote-handled mixed waste and requires a different approach. The first retrieval step is to precisely locate the caisson access chutes. Ground penetrating radar, site blueprints and pilot excavations could be used. The top of each chute is capped with concrete and would be exposed to confirm chute location.

A sleeve could be used to extend the original caisson access chute to grade. A shielded, double wall containment structure (hot cell) would be placed over the extension. (The cell would be sealed around the sleeve.) Retrieval would be performed through the floor of the hot cell. Airflow between the cell and exterior would be filtered through high efficiency particulate air (HEPA) filters. Remotely operated tools capable of breaking and removing the cement cap (and possibly cement in the chute) would be required inside the primary containment cell. The concrete cap would be removed. Caisson wastes would be individually removed through the former 36-in.-diameter disposal chute. The robotic arm would place retrieved items into a waiting shielded container. Equipment within the cell would be remotely operated during retrieval. Telerobotic equipment would be employed to minimize potential exposure of employees to immediate hazards. Retrieval could be achieved by use of a force-feedback telerobotic arm with a variety of end-effectors. Loadout ports would be designed to accommodate shipping and storage casks. Retrieved waste would be placed in the appropriate containers for shipment. The full waste containers would be moved to a suitable transport vehicle. For cost estimates this proposal would assume the use of the EBR-II (Zircaloy Hull)/21PF-1 casks.

As material in the cell is removed there would be some opportunity for very limited segregation of the waste stream. Segregation would only be employed to assist in proper disposition of the waste. Presently, there is no treatment capacity for this waste once recovered.

Highly contaminated sediments along the caisson floor would be removed by vacuum. Interior of the caisson would also be cleaned to reduce remaining contamination. The remaining level of contamination would be documented.

When content retrieval operations at one caisson unit were complete, the cell would be moved to another unit and the process repeated. Retrieval of the empty caisson structures would be performed after adjacent units are emptied, assuming the units would not be classified as inert structural debris or deemed to pose no significant threat. Retrieval could take place using standard earth moving equipment and temporary sheet steel walls to reduce the volume of soil requiring excavation. For planning purposes, it is assumed the building used for intact pipe removals or trench excavations could be adapted to provide suitable control of potential contamination.

6.3.3 Removal of Pipe Wastes

Pipe units could be removed intact, or all items removed from the columns individually, similar to caisson wastes. Both removal methods appear to be technically feasible.

Again, the first removal task for either scheme is to precisely locate the units. Ground penetrating radar, existing plot plans, and pilot excavations could be used. The top of each unit would be exposed to confirm location.

Once a unit has been adequately located, a larger diameter sleeve would be place around the whole pipe disposal unit. For cost purposes, the assumption was made that this could be performed with a crane and large diameter pipe sleeve. Each sleeve would extend past the base of the pipe unit. Since the pipe units may have degraded with age, the sleeve would provide lateral containment and integrity during retrieval operations.

Some pipe units may not contain waste. Unused units are not expected to have cement caps. These units would be removed, examined and disposed appropriately. Although some units may be empty, cost estimates were made as though all contain remote-handled waste.

For the piece-by-piece pipe waste removal, the telerobotic concept as described for caissons would be employed. The same portable hot cell would be placed above a sleeved pipe unit. All material, including the actual pipe unit structure, would be removed as waste. The hot cell would move along the row as excavation proceeds and the process repeated.

For the intact method, a backhoe would be used to excavate a trough to lay the sleeved structure into a horizontal position. The ends of the cylinders would be sealed and the units lifted into a shielded transportation cask with a crane.

Secondary containment would be achieved with a movable structure. This structure would be large enough to house the necessary equipment to remove two pipe units. It would move along the row of units as necessary.

9413204.0480

One type-B packaging (cask) would be required for each unit removed. If all 50 units prove to be full, fifty casks would be needed. An alternative transportation and storage system utilizes multiple canisters and only one or two shielded transportation casks. The canisters could be custom designed for this project. The canisters are stored in an above ground horizontal storage module (Appendix B). For the purpose of this report, DOE would assume the use of the latter because it is more cost effective. The transportation casks could be shipped to the 200 Area plateau by rail car or truck. If by rail, addition of a one mile rail spur to the work site would be necessary. Use of the existing DOE rail lines would reduce associated road closures.

6.4 DEMONSTRATION/FEASIBILITY STUDY

There is a lack of proven physical removal techniques for 618-11 Burial Ground wastes. Assuming a physical removal is justified and imminent, a demonstration of a removal and contamination control scheme would provide useful information and implementation practice for remedial design.

The proposed mission would be to facilitate development of removal capabilities by removing two pipe units. The method of retrieval currently envisioned would be the same as the intact pipe retrieval proposed in Section 6.3. An attempt would be made to remove the vertical units intact after sleeving the units. Depending on the inventory and hazard assumptions, a safety analysis would assist in determining the appropriate level of containment structure. Assuming a substantial structural containment building was not required, a 2-yr removal goal is proposed. Detailed design would be completed after intrusive site characterization to assist in determining required shielding. If waste were removed from a unit, it would be shipped to the 200 Area in a shielded cask, where it would be indefinitely stored until there is a capability to dismantle, characterize and process the waste for final disposal.

The project would provide experience directly applicable to other Hanford pre-1970 remote-handled waste disposal sites. Lessons learned can also be shared with other defense waste retrieval operations.

Areas of interest include:

- hazard assessment
- characterization techniques
- monitoring methods
- cost assessment
- verification of inventory
- cost-effective contamination control
- waste packaging/storage
- improved decontamination
- equipment options
- safety systems
- excavation engineering strategies

9413204.0481

The preferred site for the FS would be 618-10 Burial Ground. This site has similar waste inventory in pipe units and trenches, but is more distant from any operating facility. Background information on the 618-10 site is given in Appendix B. The 618-10 Burial Ground was not identified in the HDW-EIS as a suspect TRU waste site. However, 618-10 was used interchangeably with 618-11 Burial Ground for a period of time.

This option would provide for more reliable and efficient practices for full-scale burial ground removals such as 618-11.

7.0 EVALUATION OF ALTERNATIVES

9413204.0482

Selecting a preferred alternative is a process where potential actions are evaluated against a range of criteria. The evaluation process weighs factors defining effectiveness, implementability, and cost. The evaluation focuses on the alternatives. It does not determine if a hazard removal action should be initiated, or assess the significance of an alleged threat. In the NCP paradigm, these functions are performed by the lead agency in determining the appropriate extent of a response action (40 CFR 300).

The first phase evaluation screens the potential response activity against the criteria of timeliness and protection of human health and the environment. The second phase rates the potential action alternatives according to technical feasibility and effectiveness, reliability, environmental impacts, administrative feasibility, and cost. In addition, this document includes a brief evaluation of potential risks associated with each alternative.

The timeliness of an action is influenced by technology-specific and site-specific factors. Examples of some technology-specific time factors are contracting considerations, mobilization times, testing requirements, and time until capacity is available. Examples of site-specific time factors include consideration of the specific nature and type of the site and hazardous substances. For the purposes of evaluating the timeliness of proposed actions herein, each is evaluated with respect to a one year time frame after the selection decision. This specific operational objective is not a required time frame, but it is consistent with the limitations on Superfund ERA. As alluded to in Section 6.0, situations may arise where longer removal actions are foreseeable, justified, and appropriate.

Factors comprising the protectiveness of an action include meaningful reduction of threats or potential threats to public health, welfare or the environment. Not only are the mitigating consequences considered, but also potential threats imposed by the technology or action itself. Examples of environmental factors include actual or potential human, animal or food chain exposure to hazardous substances, pollutants, or contaminants; elimination or reduction of threats to drinking water supplies or sensitive ecosystems; removal of high levels of CERCLA-regulated substances from near surface soils or areas susceptible to conditions causing migration; elimination of potential fire or explosive threats, etc.

These environmental factors are intended to focus on the overall or net reduction of hazard consistent with the overall purposes of CERCLA legislation to protect human health and environment, maintain protection over time, and minimize untreated waste. The goal is to elect an alternative that provides adequate protection. Compliance with ARAR is an indication of adequacy.

Factors comprising the technical feasibility, effectiveness, and reliability of an action include the technology's demonstrated track record. The demonstrated effectiveness and reliability in reducing toxicity, mobility or volume of contamination on similar sites/media/contaminants, ability to comply with ARAR, useful life, technical uncertainties, constructibility, worker protection, and operational maintenance requirements are considered.

The technical feasibility and reliability criterion eliminates innovative, conceptual or emerging cleanup technologies from consideration as removal actions. They would require further development and do not have a record of success to evaluate.

Factors comprising the environmental impact and administrative feasibility include the potential adverse environmental impacts, mitigation measures, required coordination with other agencies, offsite permit requirements, public acceptance, and the availability of services, personnel, and materials to perform the action.

Finally, the cost factor of each action is also considered. It is important in the overall action evaluation, but is not the most significant issue for selecting the preferred action. Controlling cost will always be a prime consideration no matter what the activity, but protecting human health and the environment in a timely manner will take precedence over bottom line expenditure. Projected total costs are for assistance in selecting among alternatives. Cost information is provided in Appendix E. Costs in this document are intended to be accurate to within ± 50%, including contingency. When an action is selected, an more detailed engineering study may define specific operating needs and adjust the cost estimate.

Each alternative is discussed below.

7.1 NO ACTION

7.1.1 First Phase Evaluation

There is no time consideration eliminating this alternative. This alternative is the existing baseline condition. The DOE presently owns, manages, and controls access to the site. Remedial action is planned via the RI/FS process. Future removal would be timed with capacity to treat and dispose of the waste. National capacity to permanently treat and dispose of either newly generated transuranic waste or high level waste is not available. Burial ground hazards may be further reduced when the HDW-EIS Record of Decision is implemented. The date for implementation is uncertain.

9413204.0483

The protectiveness afforded by this alternative was addressed in the HDW-EIS (DOE 1987). No impacts to the general public were found from the pre-1970 TRU buried solid waste sites whether they were left as disposed or additional protection was provided (DOE 1987). The previously disposed pre-1970 buried TRU solid waste sites had zero presumed health effects to the offsite population over 10,000 yr, regardless of alternative selected, climate scenario, and both disruptive and functional barrier failures (DOE 1987). The option of removing 618-11 wastes was included in more than one EIS alternative. In a response to comments, the HDW-EIS states the choice of physical removal was not based on technical analysis, but on "the recognition that prudence is advisable" (DOE 1987).

Environmental impact analyses are made with a set of data, modeling assumptions, and accidental release scenarios which, in total, compound conservatism so that the calculated (predicted) impacts should exceed expected actual impacts. Modeling was performed to simulate strontium-90 and plutonium-239 concentrations in a domestic well and at the Columbia River (DOE 1987, p Q.32-33). The model assumed a wetter climate (5-cm/yr recharge) and no engineered barrier over the 618-11 Burial Ground. The model showed very slow movement of strontium-90 and even slower movement of plutonium-239. This suggests, if current conditions change, future inhabitants could encounter some risk from unmitigated hazardous substance migration. Present climatic conditions and vegetation cover on the burial ground reduce the potential for movement via groundwater.

9413204.0484

7.1.2 Second Phase Evaluation

The No Action alternative for the ERA defaults to processes already under way, such as cleanup of the Hanford Site in compliance with the established priorities of the Tri-Party Agreement, and established decisions issued by the DOE.

Deferral of further expedited response action is certainly technically feasible. This alternative is a reliable alternative for addressing potential hazards. The site is in an operable unit identified for remedial action under the Tri-Party Agreement. The site has also been addressed prior to the Tri-Party Agreement in a DOE Record of Decision regarding high level, TRU, and tank wastes. It also may be the most efficient mechanism for the addressing the long term hazards from 618-11 wastes because it allows a broader perspective of the potential hazards, costs, and possible solutions. Short-lived radioactive isotopes will continue to substantially diminish whether solid wastes are buried at 618-11 Burial Ground or in a package awaiting processing and/or disposal.

The No Action alternative would promote more efficient us of resources. Land use for interim storage and be minimized and shipping containers can be emptied at a processing facility and returned for reuse. Long term storage in shipping containers is impractical for this volume of waste. This alternative presumes risk from the site would be further evaluated as part of the RI/FS process, and if found unacceptable, response would be timely and effective. Potential exposures from operational accidents is minimized by this alternative. Such adverse environmental impacts could affect operation of the adjacent power producing facility and have far reaching consequences. The No Action alternative would be consistent with performing physical removal after the WNP-2 facility has exceeded its useful life.

The No Action alternative is administratively feasible. One of the considerations that should be weighed in the evaluation of when to undertake a physical removal action at 618-11 should be the potential impact on the adjacent commercial reactor operations. The site was extensively studied in conjunction with the siting of the reactor, and literally thousands of people worked adjacent to the burial ground.

9413204.0485

Much work at the adjacent leased location was performed before the 1982 burial ground stabilization effort. At the time of siting and construction of WNP-2, there had been no formal decision to remove the burial ground. Any physical removal action taken during the operational life of the power-generating facility must have clear, overwhelming benefit.

The cost of the No Action alternative is least of the presented options. The cost of monitoring would not necessarily be diminished by selection of any of the other options; at least over the 5-yr time frame required by full physical removal. Monitoring requirements under any physical removal would be increased over the short term, and conceivably reduced on reaching an acceptable level of potential exposure.

7.1.3 Risk Considerations

This option represents the least immediate risk to workers and the public. It leaves in place all potentially hazardous material, including contaminated soil overpack. It would have no effect on the operation of WNP-2, and no immediate consequence off-site.

Disadvantages would include the following:

1. No new knowledge of materials contained in the burial ground would be developed, therefore detailed characterization would be delayed.

2. Since no more monitoring wells would be drilled, if hazardous material transport to groundwater is occurring, it might not be discovered until the material was widely dispersed in the aquifer.

7.2 INCREASED MONITORING

7.2.1 First Phase Evaluation

This alternative can be implemented, if necessary, within 1 yr of selection. DOE presently owns, manages, and controls access to the site. Since the action alternative entails monitoring, it would not be concluded within 1 yr and would extend indefinitely, subject to periodic DOE review.

This alternative is protective because it further identifies the potential for negative impacts from waste disposed of at the 618-11 Burial Ground and may serve to further characterize the site. This is accomplished by allowing for measurement of potential groundwater contaminants adjacent to the site. Monitoring is an integral part of Hanford Site activities and is essential to assessments of actual or potential exposure to hazardous substances, pollutants, or contaminants.

The types of activities proposed are fairly common. The DOE routinely considers the environmental impacts of such activities. A biological survey has shown no threatened or endangered species which would be adversely affected by this option. Similarly, a cultural resource survey has shown there are no known cultural resources which would be adversely affected.

9413204.0486

7.2.2 Second Phase Evaluation

The Increased Monitoring alternative is technically feasible. The installation and use of groundwater monitoring wells is a familiar technology. Geophysical methods and downhole monitoring are becoming more familiar and sophisticated. Many groundwater and vadose zone wells have been installed on the Hanford Site.

The effectiveness of groundwater monitoring is limited by an understanding of spatial and temporal variability. Concentrating resources on the upper aquifer incurs a slight risk for missing dense, sinking contamination. This risk is minimal based on current site information and close proximity of the proposed wells to the burial ground. Geophysical methods and downhole monitoring are considered moderately reliable and effective for the intended purpose.

This alternative does not prevent environmental degradation per se, but provides a sensitive indicator and basis for corrective action if a problem is identified. The assessment of acceptable exposure will be assisted by accurate monitoring. The environmental impact of the intrusive burial ground investigation would be of most benefit close to the time of anticipated physical removal. Characterization information provided by such monitoring could prove invaluable in retrieval design. The activities of the alternative itself would not have significant adverse environmental consequences.

The alternative is administratively feasible given a high priority as an ERA. Continued monitoring would be feasible for the foreseeable future.

Cost of the alternative is much greater than the present costs of monitoring, however most dollars would be spent on nonrecurring costs. Projected groundwater sampling and analytical costs associated with the burial ground would be approximately $80,000/yr in 1993 dollars.

7.2.3 Risk Considerations

This option appears to contribute very little additional risk. All monitoring wells would be outside the perimeter fence of the burial ground. The uncontaminated soil overpack on the burial ground would not be disturbed. There would be no potential release from intrusion into the burial ground waste. To document risk an unreviewed safety question (USQ) screening evaluation would be conducted prior to well drilling.

The advantage of this alternative is that specific information of the local area would be obtained at very little risk to public, workers or the environment.

9413204.0487

7.3 WASTE RETRIEVAL AND MONITORED STORAGE

7.3.1 First Phase Evaluation

This alternative could not be implemented within a 1-yr time frame; it would vastly exceed this goal. It is retained for further evaluation since the 1-yr time goal is conditional. The waste retrieval is estimated for comparative purposes to take at least 5 yr, 1 yr of advanced engineering and procurement and 4 yr for retrieval implementation. This schedule only includes removal of the waste and placement in storage; additional storage time (undefined) will be required for final processing and disposition. Since a comparable retrieval has never before been implemented, there is a large uncertainty in the capability to complete this retrieval project in a timely manner.

This alternative is presumed protective because the DOE has found removal of 618-11 suspect TRU-contaminated wastes to be the environmentally preferable option among those long-term management options considered in the HDW-EIS. However, the HDW-EIS notes, "In the absence of intrusion, the environmental impacts show little difference among the disposal alternatives..." (DOE 1987, p 1.21). The HDW-EIS did not presume long-term, interim storage prior to processing and ultimate disposal. The HDW-EIS did envision a yet-to-be-constructed WRAP facility that would process waste from 618-11 as well as other sites. A facility with the necessary remote capabilities will not be in existence until at least 2007.

Conventional excavation procedures may not provide adequate protection due to the uncertain characteristics of the waste. Some containment would be required. Extensive safety documentation would be prepared to address potential hazards. Addition of building safety systems (fire protection, ventilation, etc.) would also add significantly to final cost.

This ERA action alternative would increase the short-term potential for exposure to wastes previously disposed at the 618-11 Burial Ground. Actions would be exercised to control recognized hazards and minimize remobilization contaminants in the biosphere. Extensive safety documentation would be prepared to address potential hazards. The risk of unrecognized chronic or acute hazards can be minimized, but would not be escaped as a consequence of the action.

The 1988 HDW-EIS Record of Decision states:

> "Retrieval of all the SST wastes, TRU-contaminated soil sites, and buried suspect TRU wastes for disposal in a geologic repository would have greater short-term risks than for the readily retrievable wastes given the current waste retrieval and processing methods. These three classes of wastes, including their hazardous components, are not well characterized. The efficacy of possible methods of treating and disposing of these wastes is not yet proven and the consequences of such actions are not yet well defined. Therefore, additional waste characterization and additional engineering analysis of waste retrieval and disposal options are necessary before decisions for final disposition can be made regarding geologic or in-place stabilization and disposal of these wastes. These wastes can continue to be stored safely and monitored while waste characterization and engineering development and evaluation are being conducted."

A removal decision for the 618-11 Burial Ground was not justified by debate with the above, but by the desire to consolidate pre-1970 suspect TRU-contaminated solid waste on the 200 Area plateau (DOE 1988). The HDW-EIS identified the 618-11 Burial Ground as the only suspect TRU-contaminated solid waste site off the 200 Area plateau and deferred decisions for all other such sites based upon the above rationale.

No 618-11 Burial Ground waste would be treated or destroyed directly by the option, but retrievable portions would be moved and made available for later processing. Studies of 300 Area solid waste burial grounds have indicated adequate containment of radiactive waste (DOE/RL 1993, Phillips et al. 1980). Although the waste would be further from the groundwater table, it would be closer to biological receptors, and more susceptible to purposeful intrusion while stored on the surface. Some waste would be disposed to the ground by exercising this option. This would result in expansion of 200 Area low-level burial grounds. Mixed waste and suspect TRU waste would continue to be stored until suitable treatment and disposal capacity is available. It is an assumption of this alternative that suitable storage sites can be found on the 200 Area plateau, consistent with the intent of DOE's 1988 Record of Decision.

A biological survey has shown no threatened or endangered species which would be adversely affected by this option at the 618-11 Burial Ground. A cultural resource survey has shown there are no known cultural resources which would be adversely affected at the 618-11 Burial Ground. Land used for waste storage and new rail lines would be evaluated for potential impacts to analogous resources prior to use.

9413204.0488

7.3.2 Second Phase Evaluation

At least conceptually, waste retrieval was segregated into components: trench waste, caisson waste, or pipe waste removal by one or two potential methods. However, all components have a common theme; although technically they appear surmountable, no similar retrieval of disposed waste has been demonstrated. Thus, the effectiveness and reliability of a physical removal action is very uncertain. There is no demonstrated basis to assume system capabilities and effectiveness would meet current requirements. Unproven technologies are generally inappropriate for removal actions.

Safety is fundamental. The NCP states appropriate bulk removal actions are those situations where the action will reduce the likelihood of spillage; leakage; exposure to humans, animals, or food chain; or fire or explosion (40 CFR 300). There is a lack of data to suggest this option could be safely implemented.

This alternative would potentially relocate most of the waste, but would not reduce the toxicity, mobility, or volume of contamination. Compliance with all rules and regulations would be handicapped by the lack of support facilities to characterize the waste prior to transport. The alternative would containerize the waste that is now buried beneath a stabilized site, and serve to consolidate waste management of suspect TRU-contaminated material on the 200 Area plateau. Exposure hazards may be increased prior to final disposal.

Waste retrieval environmental impacts and administrative feasibility were considered. Some removal impacts were discussed in the Section 7.1.3. Because caissons and pipe units hold the bulk of the intermediate and high activity waste, removal of these units would be expected to have more benefit than removal of trench wastes. Unfortunately, current Hanford Site waste handling procedures and facilities are not designed for acceptance of remote-handled waste. Although DOE uses >200 mR/hr as the operational definition for remote-handled waste, WHC administratively limits the contact-handled rate to 100 mR/hr. Remote handled waste would require shielding to contact-handled levels (<100 mR/hr). Overall administrative feasibility of the alternative is very low. The availability of sufficient resources to meet retrieval, transportation and shipping needs is unlikely. Permanent disposal sites and facilities to effectively characterize, process, and certify the waste for a geologic repository do not exist. When those resources become available, the alternative would be more feasible as a cost effective, permanent solution to indefinite management of waste posing unacceptable hazards.

The cost of a removal vastly exceeds the cost of other alternatives. This analysis did not find cost differences between removal options which would make removal more realistic. Costs may be higher if safety analysis or investigation reveals unexpected risks associated with the proposed methodology for trench waste removals. Two primary cost components are specialized shipping/storage container costs and storage/disposal fees. These costs may reflect a bottleneck in resource allocation for effective large-scale cleanup and raise the question, "Is the waste disposable?"

9413204.0489

7.3.3 Risk Considerations

This option clearly presents the most risk. This process will include initial excavation, encasement of removed waste into appropriate storage units, loading the units on the transportation vehicle, transportation to the temporary storage site, and any accidents that may occur while the material is in storage.

Since at this time considerable uncertainty exists about location and contents of the various storage units, ensuring adequate protection and proper engineering practices would be difficult. Proposed activities would be evaluated for radiological and toxicological risks in accordance with DOE Order 5480.21, .22 and .23 prior to implementation.

It is apparent that there are several types and levels of hazards involved with the removal activity itself. Contamination spread during excavation of the buried contaminated overburden, inadvertent breaching of confinement provided by the pipe units and caissons, exhumation of deteriorated containers and intrusion into unforeseen areas of contamination. Unexpected, energetic chemical reactions may occur when disturbing buried materials. Toxic gases, fires or explosions may result. Common industrial hazards will be exacerbated by requirements for worker protection.

9413204.0490

7.4 FEASIBILITY DEMONSTRATION

7.4.1 First Phase Evaluation

This alternative could not be implemented within a 1-yr time frame; it would moderately exceed this goal. It is retained for further evaluation since the 1-yr time goal is conditional. The proposed demonstration would take at least 2 yr. Since a comparable retrieval has never before been implemented, there is a large uncertainty in the capability to complete this project in a timely manner.

This alternative is protective in the sense that it improves the ability to implement a physical removal, and would reduce potential long-term exposure at 618-10 by removing (618-10) waste and placing it in aboveground storage. Although this alternative reduces long term potential exposure, the act itself would increase potential exposure. However, the safety analysis should demonstrate that the "risk" of the act is acceptable. Because this feasibility demonstration would be conducted at 618-10, it would not eliminate any known hazardous substance exposure from 618-11 wastes. The alternative does not reduce any known threat to drinking water supplies or sensitive ecosystems. It does not result in a net removal of CERCLA-regulated substances from near-surface soils. It may not result in an overall reduction of threat from fire or explosions.

A biological survey of the 618-10 Burial Ground has shown no threatened or endangered species which would be adversely affected by this option. A loggerhead shrike was observed at 618-10. Loggerhead shrikes are classified as a federal candidate species (FC_2) and a state candidate species (SC), but do not have the same status as a confirmed threatened or endangered species. A cultural resource survey has shown there are no known cultural resources that would be adversely affected at the 618-10 Burial Ground.

7.4.2 Second Phase Evaluation

A removal of pipe units appears technically viable. The technical feasibility could be enhanced by selection of nonradioactive (simulated) units instead of those at 618-10. This would have associated tradeoffs in utility and costs.

The alternative, by nature, lacks security that it would prove effective and reliable in acceptably reducing potential exposure to contaminants. Even if the technology is effective, the utility of expended resources may not be realized until removal is exercised. If other factors are inhibiting removal, incurring development costs at this point may be premature. Resources would be utilized more efficiently if the purchase of the expensive transportation and storage casks were phased with successful demonstrations on nonradioactive pipe units. This would require lengthening the two year time frame. The 2-yr time frame would mandate initiation of dry storage cask procurement activities prior to full mockup demonstrations. The need for an immediate demonstration should be balanced against efficiency of resource utilization and safety in setting goals for the alternative.

Again, the scope of physical CERCLA removal actions is limited to those situations where the action will reduce the likelihood of spillage; leakage; exposure to humans, animals, or food chain; or fire or explosion (40 CFR 300). It is uncertain that the proposed action would achieve this.

The ability to comply with ARARs for characterization and storage of the waste is doubtful since dismantling and sampling of the pipe units is inconsistent with the method. The difficulty of compliance with ARAR and DOE Orders would reflect poorly on the criteria of alternative effectiveness and administrative feasibility. Negative environmental impacts could also be alleged as evidenced by noncompliance with Resource Conservation and Recovery Act (RCRA) characterization and storage requirements.

The purchase and placement of poorly characterized, intermediate or high activity waste in a large dry storage cask could potentially impact design requirements of a future facility to remove and process the waste. This reflects poorly on the attractiveness of the method for all criteria. The useful cask life would likely exceed the period of time necessary to have an operational facility capable of processing the waste.

This alternative is in contrast to the both usual short-term nature of removal actions and the application of demonstrated, reliable technology to result in reduction of identified hazard.

9413204.0491

7.4.3 Risk Considerations

This option clearly includes the hazards described for the Waste Retrieval and Monitored Storage alternative (Section 7.3.3). The risks could be limited to a certain extent by the smaller scale of the demonstration project and reduced potential of inadvertent contamination to WNP-2 and the public.

7.5 COMPARATIVE SUMMARY AND SELECTION OF PREFERRED ALTERNATIVE

Each alternative has been compared with relevant criteria. In this section, the alternatives will be compared with respect to each other and a preferred alternative selected.

The timeliness and protectiveness are key parameters in the selection of an appropriate hazard removal action. Evaluations of these parameters are summarized in Table 6.

9413204.0492

Table 6. Screening of Action Alternatives.

Alternative	Timeliness	Reduce risk to human health?	Reduce risk to environment?
No Action	N/A	Defers to RI/FS risk evaluation process	Defers to RI/FS risk evaluation process
Increased Monitoring	1 yr	Assists in defining risk	Assists in defining risk
Waste Retrieval and Monitored Storage	>>1 yr	Incurs risks to reduce potential future exposure	Incurs risks to reduce potential future exposure
Feasibility Demonstration	>>1 yr	Assists in defining hazards and response capacity	Assists in defining hazards and response capacity

Two of the options exceed the 12-mo goal for action. Only the No Action and Increased Monitoring alternatives are consistent with a short-term hazard removal action. Only the Increased Monitoring alternative achieves a *supplemental* activity within one year.

Each alternative reflects different operational objectives to reduce potential risk to the public, workers, and environment. The ERA No Action alternative would reduce risk by mechanisms other than an Expedited Response Action, such as the CERCLA RI/FS process and compliance with established routine procedures. The Increased Monitoring alternative would serve to monitor for adverse groundwater affects and serve to provide early knowledge of migration, if present.

Waste retrieval and processing was selected in the HDW-EIS Record of Decision as the environmentally preferred alternative. However attempted removal at this time may actually cause increased undesirable consequences since there is no existing facility to process or dispose of the waste. Very significant short-term endangerment may be imposed by attempting full retrieval or the feasibility demonstration option.

Negative consequences of retrieval are not balanced by a technical demonstration of the need to perform a short-term physical removal in response to hazardous substance migration (Phillips et al. 1980, DOE 1987, ERDA 1975). Existing data and the site conceptual model do not indicate that a complete exposure pathway presently exists. The exhumation of waste would provide direct pathways to the environment that do not currently exist. Compliance with safety procedures would reduce but not eliminate potential exposures. The lack of groundwater data immediately adjacent to the burial ground is an identified data gap. The Increase Monitoring option would be protective by fulling this data need.

The preferred alternative of increased monitoring is expected to confirm the conclusion that no current substantial threat to human health or the environment is present. This confirmation provides justification for deferring physical removal until the standard CERCLA RI/FS process which addresses risk reduction with other factors to arrive at long-term remedial decision.

An examination of the second phase screening criteria indicates the No Action and Increased Monitoring alternatives are dominant. Evaluations of these parameters are summarized in Table 7. Relative ratings are not necessarily equivalent since each alternative has individualized objectives.

Table 7. Second Phase Evaluations.

Alternative	Technical feasibility	Effectiveness and reliability	Environmental impact	Administrative feasibility	Cost
No Action	High	High	None	High	Low
Increased Monitoring	High	High to Med	Minimal	High	Med to Low
Waste Retrieval and Monitored Storage	Low	Low	Significant Negative Short-term	Low	High
Feasibility Demonstration	Med to Low	Low	Moderate Negative Short-term	Low	Med to High

The ability to perform a safe, reliable removal of hazard presumes a clearly defined problem and implementable solution. The Increased Monitoring alternative provides the clearest beneficial balance between criteria. It recognizes that cleanup faces significant constraints. It serves to reduce uncertainty regarding potential types and migration of contaminants. The alternative balances concerns for groundwater protection.

9413204.0493

The No Action and Increased Monitoring alternatives may be contrasted with the remaining alternatives which may promote haphazard or short-sighted use of the 200 Area plateau. There is considerable uncertainty in the consequences of attempting immediate implementation of either the feasibility or full retrieval alternatives. Hasty attempts at removal may be inconsistent with the axiom, "Do no harm." There appears to be no short-term risks forcing removal or benefits justifying impatient removal. If the HDW-EIS is correct, the decision for physical removal was not based on technical analysis of hazard. Since there is no significant contrary information indicative of a heretofore unknown hazard, an immediate removal action does not appear justified.

The Increased Monitoring alternative is selected as the preferred alternative. Its primary differentiation from the No Action alternative is the degree of groundwater protection and basis for future technical analysis of hazard. The preferred alternative of increased monitoring is expected to confirm the current understanding that no near-term hazard is present. This confirmation would provide justification for deferring action on this waste site to the standard CERCLA RI/FS process which considers risk reduction and numerous other factors to arrive at permanent solutions.

9413204.0494

8.0 REFERENCES

Airhart, S. P., 1990, *Borehole Completion Data Package for the 216-S-10 Ditch and Pond*, WHC-MR-0206, Westinghouse Hanford Company, Richland, Washington.

Brown, D. J., and R. E. Isaacson, 1977, *The Hanford Environment As Related to Radioactive Waste Burial Grounds and TRU Storage Facilities*, ARH-ST-155, Atlantic Richfield Hanford, Richland, Washington.

Brown, D. J., J. F. Gieger, and R. E. Isaacson, 1978, *Assessment of Hanford Burial Grounds and Interim Tru Storage*, RHO-CD-78, Rockwell Hanford Operations, Richland, Washington.

DOE, 1987, *Final Environmental Impact Statement, Disposal of Hanford Defense High-Level, Transuranic, and Tank Wastes*, DOE/EIS-0113, 5 Vols., U.S. Department of Energy, Washington, D.C.

DOE-RL, 1982, *Site Characterization Report for the Basalt Waste Isolation Project*, DOE-RL 82-3, Vol. II, U.S. Department of Energy, Richland Operations Office, Richland, Washington.

DOE-RL, 1993, *Phase 1 Remedial Investigation Repoert for the 300-FF-1 Operable Unit*, DOE/RL-92-43, Draft C, U.S. Department of Energy, Richland Operations Office, Richland, Washington.

Ecology et al., 1989, *Hanford Federal Facility Agreement and Consent Order*, et seq., Washington Department of Ecology, U.S. Environmental Protection Agency, and U.S. Department of Energy, Olympia, Washington.

EPA, 1986a, *Test Methods for Evaluating Solid Wastes*, SW-846, Third Edition, U.S. Environmental Protection Agency/Office of Solid Waste and Emergency Response, Washington, Washington, D.C.

EPA, 1987, *Environmental Review Requirements for Removal Actions*, OSWER Directive 9318.0-05, U.S. Environmental Protection Agency, Washington, D.C.

EPA, 1990, *National Oil and Hazardous Substances Pollution Contingency Plan*, Title 40, Code of Federal Regulations, Part 300, U.S. Environmental Protection Agency, Washington, D.C.

ERDA, 1975, *Final Environmental Statement, Hanford Waste Management Operations*, ERDA-1538, U.S. Energy Research and Development Administration, Washington, D.C.

Gee, G.W., 1987, *Recharge at the Hanford Site: Status Report*, PNL-6403, Pacific Northwest Laboratory, Richland, Washington.

Gerber, M. S., 1992, *Past Practices Technical Characterization Study - 300 Area - Hanford Site*, WHC-MR-0388, Westinghouse Hanford Company, Richland, Washington.

Glantz, C. S., M. N. Schwartz, K. W. Burk, R. B. Kasper, M. W. Ligotke, and P. J. Perrault, 1990, *Climatological Summary of Wind and Temperature Data for the Hanford Meteorology Monitoring Network*, PNL-7471, Pacific Northwest Laboratory, Richland, Washington.

Hulstrom, L. C., 1992, *Climatological Summary of the 300 Area for the 300-FF-1 Operable Unit Remedial Investigation*, WHC-SD-EN-TI-005, Rev 0, Westinghouse Hanford Company, Richland, Washington.

Kasza, G. L., M. J. Hartman, F. N. Hodges, and D. C. Weekes, 1992, *Groundwater Maps of the Hanford Site, June 1992*, WHC-EP-0394-5, Westinghouse Hanford Company, Richland, Washington.

La Sala, F. W., and G. C. Doty, 1975, *Hydrology of Radioactive Waste Burial Grounds at the Hanford Reservation, Washington*, U.S. Department of the Interior, Geological Survey (Open File Report).

Maxfield, H. L., 1979, *Handbook of 200 Areas Waste Sites*, RHO-CD-673, Rockwell Hanford Operations, Richland, Washington.

McGhan, V. L., 1989, *Hanford Wells*, PNL-6907, Pacific Northwest Laboratory, Richland, Washington.

Newcomer, D. R., K. D. Pohlod, and J. P. McDonald, 1992, *Water-Table Elevations on the Hanford Site and Outlying Areas, 1991*, PNL-8122, Pacific Northwest Laboratory, Richland, Washington.

NRC, 1981, *Draft Environmental Statement Related to the Operation of WPPSS Nuclear Project No. 2*, NUREG-0812, U.S. Nuclear Regulatory Commission, Office of Nuclear Reactor Regulation, Washington, D.C.

Phillips, S. J., L. L. Ames, R. E. Fitzner, G. W. Gee, G. A. Sandness, and C. S. Simmons, 1980, *Characterization of the Hanford 300 Area Burial Grounds*, PNL-2557, Pacific Northwest Laboratory, Richland, Washington.

PNL, 1993a, *1965 Battelle Northwest Radiation Procedure #9*, PNL-8671, Pacific Northwest Laboratory, Richland, Washington.

PNL, 1993b, *1967 Radiation Survey Reports, 325 Building*, PNL-8726, Pacific Northwest Laboratory, Richland, Washington.

PNL, 1993c, *1966 Radiation Survey Reports, 300 Wye Burial Ground*, PNL-8727 Pacific Northwest Laboratory, Richland, Washington.

PNL, 1993d, *1965 Radiation Survey Reports, 300 Wye Burial Ground*, PNL-8728, Pacific Northwest Laboratory, Richland, Washington.

Schmidt, J. W., A. R. Johnson, S. M. McKinney, C. J. Perkins, 1992, *Westinghouse Hanford Company Operational Environmental Surveillance Annual Report for 1992*, WHC-EP-0573-1, Westinghouse Hanford Company, Richland, Washington.

Shannon & Wilson, Inc., 1971, *Foundation Investigation, Washington Public Power Supply System, Hanford No. 2 Nuclear Power Plant, Central Plant Facilities, Benton County, Washington*, Seattle, Washington.

Stenner, R. D., K. H. Crammer, K. A. Higley, S. J. Jette, D. A. Lamar, T. J. McLaughlin, D. R. Sherwood, and N. C. VanHouton, 1988, *Hazard Ranking System of CERCLA Inactive Waste Sites*, Vol. 3, PNL-6456, Pacific Northwest Laboratory, Richland, Washington.

WAC 173-304, 1988, "Minimum Functional Standards for Solid Waste Handling," *Washington Administrative Code*, as amended.

Webb, C. R., 1993a, *Miscellaneous Information Regarding Operation and Inventory of 618-10 Burial Ground*, WHC-MR-0415, Westinghouse Hanford Company, Richland, Washington.

Webb, C. R., 1993b, *Miscellaneous Information Regarding Operation and Inventory of 618-11 Burial Ground*, WHC-MR-0416, Westinghouse Hanford Company, Richland, Washington.

WHC, 1988a, *Environmental Investigations and Site Characterization Manual*, WHC-CM-7-7, Westinghouse Hanford Company, Richland, Washington.

WHC, 1988b, *Environmental Compliance*, WHC-CM-7-5, Westinghouse Hanford Company, Richland, Washington.

WHC, 1988c, *Hazardous Material Packaging and Shipping*, WHC-CM-2-14, Westinghouse Hanford Company, Richland, Washington.

9413204.0496

Willis, N. P., 1991, *Hanford Site Solid Waste*, WHC-EP-0063-3, Westinghouse Hanford Company, Richland, Washington.

WPPSS Nuclear Project, Plant No. 2, 1981, *Safety Analysis Report*, Vol. 2, Amendment 13.

53 FR 12449, 1988, "Disposal of Hanford Defense High-Level, Transuranic and Tank Wastes; Record of Decision," *Federal Register*, Vol. 53, pp 12449-12453, (April 14).

9413204.0497

THIS PAGE INTENTIONALLY
LEFT BLANK

Metric Conversion Chart

Into Metric Units

If You Know	Multiply By	To Get
Length		
inches	25.4	millimeters
inches	2.54	centimeters
feet	0.305	meters
yards	0.914	meters
miles	1.609	kilometers
Area		
sq. inches	6.452	sq. centimeters
sq. feet	0.093	sq. meters
sq. yards	0.836	sq. meters
sq. miles	2.6	sq. kilometers
acres	0.405	hectares
Mass (weight)		
ounces	28.35	grams
pounds	0.454	kilograms
short ton	0.907	metric ton
Volume		
teaspoons	5	milliliters
tablespoons	15	milliliters
fluid ounces	30	milliliters
cups	0.24	liters
pints	0.47	liters
quarts	0.95	liters
gallons	3.8	liters
cubic feet	0.028	cubic meters
cubic yards	0.765	cubic meters
Temperature		
Fahrenheit	subtract 32 then multiply by 5/9ths	Celsius

Out of Metric Units

If You Know	Multiply By	To Get
Length		
millimeters	0.039	inches
centimeters	0.394	inches
meters	3.281	feet
meters	1.094	yards
kilometers	0.621	miles
Area		
sq. centimeters	0.155	sq. inches
sq. meters	10.76	sq. feet
sq. meters	1.196	sq. yards
sq. kilometers	0.4	sq. miles
hectares	2.47	acres
Mass (weight)		
grams	0.035	ounces
kilograms	2.205	pounds
metric ton	1.102	short ton
Volume		
milliliters	0.033	fluid ounces
liters	2.1	pints
liters	1.057	quarts
liters	0.264	gallons
cubic meters	35.315	cubic feet
cubic meters	1.308	cubic yards
Temperature		
Celsius	multiply by 9/5ths, then add 32	Fahrenheit

Radiation

Multiply # of → / to obtain # of ←	by → / by ←	to obtain # of → / Divide # by ←
becquerel (Bq)	2.703×10^{-11}	curies (Ci)
curies (Ci)	3.7×10^{10}	dis/sec (dps)
curies (Ci)	2.22×10^{12}	dis/min (dpm)
curies (Ci)	10^{3}	millicuries (mCi)
curies (Ci)	10^{6}	microcuries (uCi)
curies (Ci)	10^{12}	picocuries (pCi)
curies (Ci)	3.7×10^{10}	becquerels (Bg)
gray (Gy)	100	rad
microcuries	3.7×10^{4}	dis/sec (dps)
microcuries	2.22×10^{6}	dis/min (dpm)
R (Roentgen)	2.58×10^{-4}	C/kg of air
rads	0.01	gray (Gy)
rads	0.01	J/kg
rem	0.01	sievert (Sv)
seivert (Sv)	100	rem

9413204.0498

THIS PAGE INTENTIONALLY
LEFT BLANK

QTY.	FT. NO.	DESCRIPTION

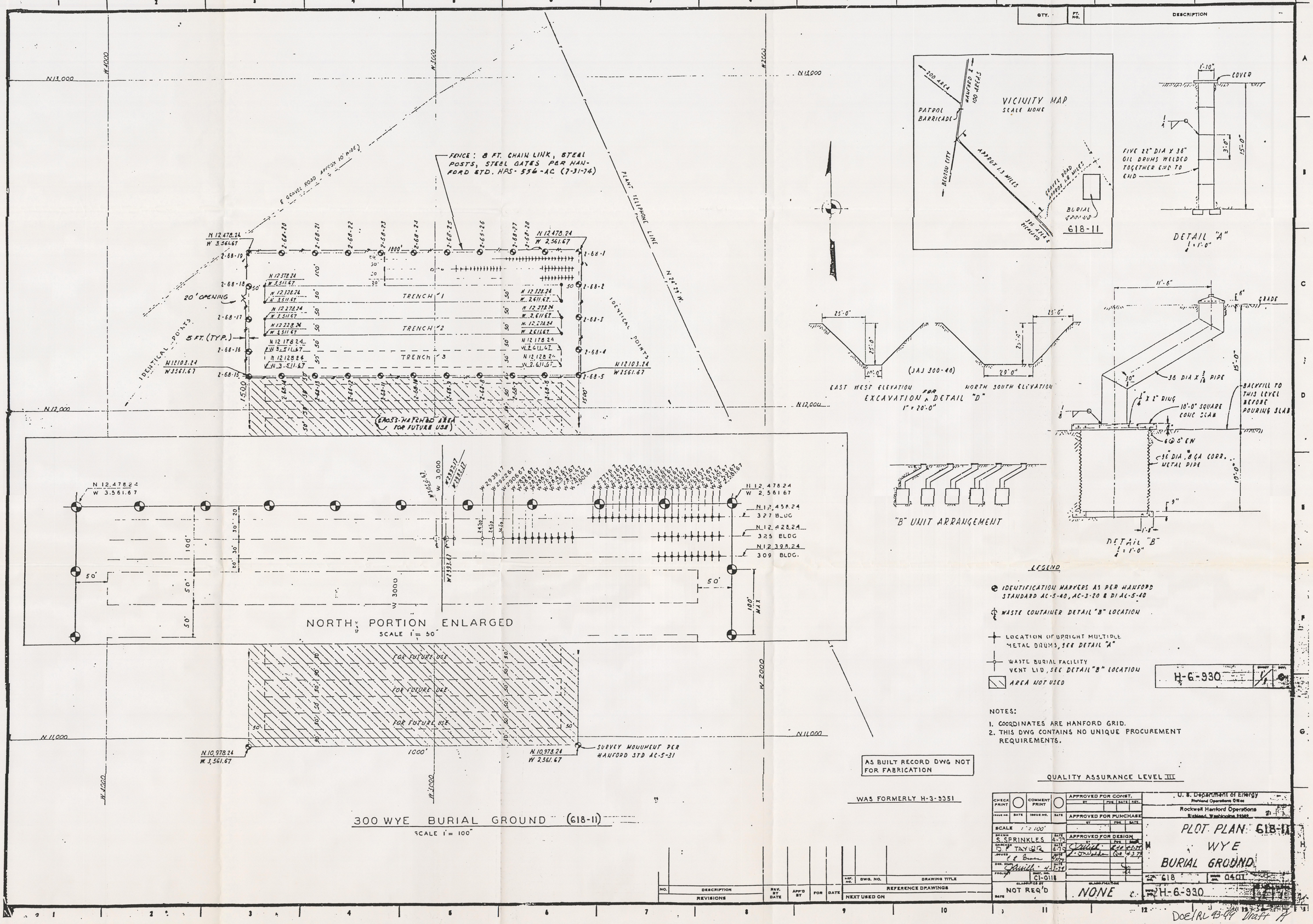

9413201.0505

APPENDIX A
REFERENCE LETTER

9413204.0501

United States
Environmental Protection
Agency

Region 10
Hanford Project Office
712 Swift Boulevard, Suite 5
Richland WA 99352

EPA

JUL 08 1992

Mr. Steve Wisness
Hanford Project Manager
U.S. Department of Energy
P.O. Box 550, A5-15
Richland, Washington 99352

Re: Approval to Proceed on Expedited Response Action at the 618-11 Burial Grounds.

Dear Mr. Wisness:

The Washington State Department of Ecology (Ecology) and the U.S. Environmental Protection Agency (EPA) have completed their review of the Expedited Response Action (ERA) candidate sites.

Ecology and EPA recommends that the U.S. Department of Energy (DOE) begin preparing the Engineering Evaluation and Cost Analysis (EE/CA) for the 618-11 Burial Grounds.

EPA has lead regulatory oversight on this ERA. Mr. Larry Gadbois will be the EPA Unit Manager on this site. Ms. Nancy Uziemblo will be the Unit Manager for Ecology. In addition, Ecology and EPA recommend establishing an administrative record for this ERA at this point in time.

If you have any questions or concerns regarding this matter please feel free to contact Ms. Nancy Uziemblo of Ecology at (509) 546-2990 or Mr. Larry Gadbois of EPA at (509) 376-9884.

Sincerely,

Paul T. Day
Hanford Project Manager

David C. Nylander
Kennewick Office Manager

cc: Andy Boyd, EPA
Julie Erickson, DOE
George Hofer, EPA
Dave Jansen, Ecology
Wayne Johnson, WHC
Darci Teel, Ecology
Tim Veneziano, WHC
Administrative Record (ERA 618-11 Burial Grounds)

9413204.0502

THIS PAGE INTENTIONALLY
LEFT BLANK

9413204.0503

APPENDIX B
618-10 BURIAL GROUND

9413204.0504

618-10 BURIAL GROUND

A discussion of the 618-10 burial ground is necessary because of its relationship to the 618-11 burial ground. These burial grounds were active and operated simultaneously in 1962 and 1963. During this time, 300 Area laboratory waste was dispersed to both burial grounds. This information is important when considering waste inventory and an alternative site for testing retrieval technology. The 618-10 Burial Ground was not evaluated in the HDW-EIS.

SITE DESCRIPTION

The 618-10 burial ground is located approximately 4 miles northwest of Hanford's 300 Area. The site is a rectangle, oriented northwest to southeast, less a small triangular section on its south corner. The site measures 485 X 570 ft, with a total area of approximately 6 acres.

The 618-10 burial ground was previously known as the 300 North burial ground and also as 318-10. It was activated in March 1954 and closed in September 1963. The burial facilities include 12 trenches ranging in size from 40 X 50 ft to 75 X 300 ft. It also contains ninety-four 15 ft long pipe units (bottomless 55-gal drums welded together and buried vertically). The entire burial ground was surface stabilized with clean top soil in 1982. Individual disposal units are no longer visible.

The site received a broad spectrum of low to high activity, dry, radioactive wastes. The waste was primarily fission products and some plutonium contaminated waste from the 300 area. The trenches received low level waste in cardboard boxes, cement barrels containing higher activity waste and some liquids, and large miscellaneous items (i.e. laboratory hoods, vent filters, and glove box trays). Nonradioactive beryllium was also disposed to the trenches.

The pipe units received the remote handled, high activity waste. Early hot cell waste was sent to the burial ground in cardboard cartons on a lead shielded pan called a "gunk catcher". The cartons were deposited into the pipe unit opening and the gunk catcher returned for reuse (Gerber, 1992). In 1959, the 327 Metallurgy Laboratory began using a cask truck to transport hot cell waste. The truck was positioned over the opening of the pipe unit. The waste in aluminum "Milk Pails" was remotely dropped into the unit. Another cask, known as the "Gatling Gun" deposited 1-L cans of high activity waste from a rotating chamber into the pipe units.

Few records documenting solid waste burial activities were kept until 1960. Hand written monthly logs were found providing a tally of waste containers and their volume (Webb 1993a). Monthly logs were identified for September through December of 1960. These records plus a semiannual format for January through July 1961 identify waste sent to 618-10 (Webb 1993b). The totals are summarized in the following table.

Shipments to 618-10 (300 North) Burial Ground
(September 1960 through June 1962)

Radiological Level	Total Containers		Volume (ft^3)
<10 Ci/ft^3 (in trenches)	Cardboard cartons -	5,008	22,563
10 to 1,000 Ci/ft^3	Milk pails - (in pipe units)	529	129.9
	Concrete drums - (in trenches)	95	1,167.5
>1,000 Ci/ft^3 (in pipe units)	Juice cans -	135	7.2
	Milk pails -	95	23.7
Miscellaneous to trenches	Wooden box -	1	220.0
	Plutonium glovebox -	1	60
	Steel tray -	1	11
	CWS filter -	1	4.2

9413204.0506

The free-falling waste containers often broke open during disposal. Refluxing air from the vertical cylindrical units carried contamination that spread on the surface. Three of these incidents are documented in Volume 3 of the Hazard Ranking System of Inactive CERCLA Waste Sites (Stenner et al. 1988) and described below.

1. On July 4, 1961, a fire in a trench at 618-10 destroyed all flammable material in the trench. A contamination spread extending 300 yd outside the site fence resulted. Contamination was found in excess of 100,000 counts per minute at a distance of 75 ft from the fence. Contamination readings diminished to 4,000 counts per minute specks at the edge of the plume.

2. On February 14, 1963, spotty contamination readings up to 80,000 counts per minute were detected in front of the 618-10 Burial Ground gate after a routine milk pail burial.

3. On September 4, 1963, an improper container was used to dispose of waste at 618-10. The lid came off, resulting in a contamination spread of approximately 600 ft^2 around the pipe storage unit. The maximum contamination reading was 400 mr/hr at 2 in.

REFERENCES

Gerber, M. S., 1992, *Past Practices Technical Characterization Study - 300 Area - Hanford Site*, WHC-MR-0388, Westinghouse Hanford Company, Richland, Washington.

Stenner, R. D., K. H. Crammer, K. A. Higley, S. J. Jette, D. A. Lamar, T. J. McLaughlin, D. R. Sherwood, and N. C. VanHouton, 1988, *Hazard Ranking System of CERCLA Inactive Waste Sites*, Vol. 3, PNL-6456, Pacific Northwest Laboratory, Richland, Washington.

Webb, C. R., 1993a, *Miscellaneous Information Regarding Operation and Inventory of 618-10 Burial Ground*, WHC-MR-0415, Westinghouse Hanford Company, Richland, Washington.

Webb, C. R., 1993b, *Miscellaneous Information Regarding Operation and Inventory of 618-11 Burial Ground*, WHC-MR-0416, Westinghouse Hanford Company, Richland, Washington.

9413204.0507

THIS PAGE INTENTIONALLY
LEFT BLANK

9413204.0508

APPENDIX C
618-11 UNPLANNED RELEASES

9413204.0509

618-11 Unplanned Releases

Seven unplanned releases of radioactive contamination at the 618-11 burial ground have been documented in *Hazard Ranking System of CERCLA Inactive Waste Sites* (Stenner et al. 1988). The releases are summarized as follows:

1. On September 30, 1963, an externally contaminated container caused a contamination spread of approximately 400 ft^2 during a routine burial at 618-11. Maximum documented readings were 1.4 R/hr at 3 in. The area was sprayed with 6,000 gal of water to control blowing contaminated dirt. Most of the contamination was shoveled into waste barrels. The area was covered with several inches of clean sand.

2. On March 6, 1964, radioactive material blew out of a waste can as it was lowered into the 618-11 Burial Ground. Readings up to 10,000 counts per minute were found in an area of approximately 1,000 ft^2 in size.

3. On May 18, 1964, an area at 618-11 approximately 1,800 ft^2 was contaminated with fission products reading up to 500 counts per minute. The area was covered with clean soil.

4. On February 8, 1965, 40-mph wind gusts blew waste out of a truck and contaminated an area of 1,400 ft^2 at the 618-11 Burial Ground. The waste was described as Ru-103 and Zr-Nb95. The maximum reading was 200 mr/hr.

5. On March 1, 1965, a box containing a CWS filter was dropped off a truck at the 618-11 Burial Ground. Highly contaminated dust was reported to have caused spotty contamination in the immediate vicinity of the truck.

6. On April 7, 1967, during a routine cask burial at 618-11, a contamination spread of 30 ft^2 was identified from loose contamination around the chute. Maximum reported readings were 100,000 counts per minute.

7. On April 14, 1967, during a routine burial at 618-11, a corroded aluminum can containing pieces of an N Reactor safety rod became wedged in the cask truck chute. This resulted in a fan-shaped contamination spread extending 750 ft from the dump chute. Maximum recorded readings were 450 mr/hr.

Stenner, R. D., K. H. Crammer, K. A. Higley, S. J. Jette, D. A. Lamar, T. J. McLaughlin, D. R. Sherwood, and N. C. VanHouten, 1988, Hazard Ranking System of CERCLA Inactive Waste Sites, Vol 3, PNL-6456, Pacific Northwest Laboratories, Richland, Washington.

THIS PAGE INTENTIONALLY
LEFT BLANK

9413204.0511

APPENDIX D
TRANSPORTATION AND PACKAGING INFORMATION RELATED TO 618-11 ERA

9413204.0512

ONSITE TRANSPORTATION PACKAGING REQUIREMENTS

This appendix is included to support assumption made in the Removal and Monitored Storage alternative.

GENERAL GUIDELINES

At the U.S. Department of Energy (DOE) Hanford Site, radioactive materials are often widely separated from the facilities that process, characterize, treat, and dispose of the materials. The site layout requires that radioactive materials be transported on roadways and railways for distances of 20 to 30 miles.

The DOE, Richland Operations Office (RL) Order 5480.1, Chapter III (RL 1982) requires that onsite packaging and shipping of hazardous materials be conducted in accordance with the U.S. Department of Transportation (DOT) regulations or, if not technically or economically practicable, provide *an equivalent degree of safety*. In order to meet this requirement, it is appropriate to define risk acceptance criteria, and to compare risks of potential adverse consequences with these criteria to demonstrate equivalent safety.

9413204.0513

It is intended that the risk associated with the onsite transfer of any non-DOT packaging system be evaluated and demonstrated to be acceptable in the safety documentation for that packaging system. This is typically done by performing an onsite Safety Analysis for Packaging (SARP) for the specific packaging system. On the basis of this evaluation, actions are identified to minimize hazards and ensure that the estimated consequences are within the specified criteria. Controls may then be instituted to reduce accident frequencies or accident consequences so that the overall risk of a planned transportation activity is acceptable.

REGULATIONS AND REQUIREMENTS

The management of hazardous materials, including their transport within the Site boundaries, is an onsite operation. Movement of materials onsite does not qualify as commercial transportation; transportation regulations do not apply to these operations. However, the transportation regulations form the basis for evaluating the safety of onsite shipments. As in all operations, it is required that the public, the workers, and the environment be protected.

The term onsite is defined as any area that is either fenced or access controlled DOE property. The right of way on DOE property to which the public has access is considered offsite. Any shipment originating from south of the Wye Barricade is considered as an offsite shipment, unless the DOE owned route with public access is temporarily closed to public access (i.e., through a road closure operation). In the cases of the 618-11 burial site, road closures would be required.

Packaging for onsite transportation of radioactive material is selected on the basis of systems engineering and operational considerations (e.g. technical and economic limitations, schedule, and As Low As Reasonably Achievable exposures). The equivalent safety concept for onsite transportation is intended to protect the general public and onsite workers from unacceptable risk without imposing unreasonable costs on the DOE and the taxpayers.

Transportation regulations address three basic packaging safety requirements applicable to radioactive materials: containment, shielding, and subcriticality. These requirements are expressed in terms of performance standards under specified normal and hypothetical accident conditions. The regulatory requirements for containment, shielding, and subcriticality are summarized below.

9413204.0514

CONTAINMENT REQUIREMENTS

Normal Conditions of Transport - The maximum permissible release is expressed in terms of Curies per hour. The limit is based on the radionuclides in the package.

Accident Conditions of Transport - The maximum permissible release is expressed in terms of Curies in 1 wk. The limit is based on the radionuclides in the package.

SHIELDING REQUIREMENTS

Normal Conditions of Transport - In general, regulations require that the radiation dose rate at the surface of the package be no higher than 200 mrem/h and 10 mrem/h at 2 meters. Packages transported onsite are selected to minimize radiation levels in accordance with ALARA principles.

Hypothetical Accident Conditions of Transport - Regulations limit the acceptable dose rate at the surface of a package subjected to an accident. Evaluation of onsite packaging includes the assessment of the effects of accidents on shielding.

SUBCRITICALITY REQUIREMENTS

The regulations require that a package used for the shipment of fissile material be designed and constructed and its contents so limited that it would be subcritical under specified conditions. Criticality evaluations are performed to document that an onsite package provides equivalent safety under analogous conditions.

EQUIVALENT SAFETY

The equivalent safety concept postulates that alternative means of packaging and transport yield an equivalent degree of safety (or equivalent level of risk) by achieving the same shipping results. According to RL Order 5480.1, Change 1, Chapter III (RL 1982), an equivalent degree of safety shall be provided for onsite shipments as is afforded by the shipping regulations of DOT. The DOE field operation policy is to use DOT/DOE/NRC certified containers whenever technically and economically practicable for onsite shipments and to keep the exposure to individuals during the transportation and handling of radioactive material packages as low as practicable.

METHODS OF DEMONSTRATING EQUIVALENT SAFETY

9413204.0515

The DOE contractor assures equivalent safety in radioactive packaging by applying controls analogous to those used in the regulations. As in the federal regulations, a graded approach is employed. Based on the degree of hazard associated with each payload, radioactive materials are designated by the regulatory categories: low specific activity (LSA), Type A, and Type B. The safety documentation for each packaging system reflects this graded approach.

The degree of hazard associated with a package is further refined by evaluating the potential dose consequence associated with the payload. This evaluation does not rely on DOT/NRC packaging performance standards.

The analyses performed in support of the safety documentation are similar to those performed to meet regulatory requirements, in that both normal and accident conditions are evaluated. However, these conditions are modeled to reflect the Site environment. For example, the use of a dedicated road under controlled conditions would be accounted for in an evaluation of accident risk.

Furthermore, the safety documentation for each packaging system requires that quality assurance, maintenance, and inspection procedures ensure that the packaging system is in good condition and is used in the correct configuration.

The performance-based DOT and NRC packaging requirements for certification (DOT 1992a; NRC 1992) have no specific risk acceptance guidelines. These packaging requirements specify testing conditions and corresponding acceptance criteria. It is expected that certified packaging will provide an adequate degree of safety. Certified packaging poses an acceptable level of risk when used in onsite transportation operations. The equivalent safety approach is applied so that the resulting risk from transportation operations using alternative onsite packaging and operational controls is shown to be acceptably low in comparison to a set of alternative risk acceptance criteria.

Assumptions and Guidelines Demonstrating Equivalent Safety for Transportation

1. The DOE contractor applies equivalent safety evaluation methods primarily to the onsite transportation of *radioactive* materials.

2. The DOE policy is to use DOT/DOE/NRC approved containers whenever technically and economically practicable for onsite shipments. Equivalent safety alternatives will only be used for selected packaging systems and transportation activities that have not been shown to meet the performance criteria of the regulations.

3. For those onsite transportation activities and selected packaging systems appropriate for the demonstration of equivalent safety, it is intended that DOT/DOE/NRC regulations for normal conditions of transport be met. If normal conditions of transport requirements are not met, justification is provided in the approved packaging safety documentation.

9413204.0516

Detailed Method for Demonstrating Equivalent Safety

This section describes a method to demonstrate equivalent safety by applying the alternative risk acceptance criteria to onsite transportation activities involving radioactive materials. Similar methods have been applied to various transportation and packaging operations (Wang 1991). Procedural steps for establishing equivalent safety for onsite transportation and packaging applications are as follows:

1. Scope and purpose of the radioactive material transportation operation are identified.

2. Appropriate packaging DOE/DOT/NRC certified is selected.

3. If certified commercial packaging is not available, new packaging that meets the performance testing criteria required by the applicable regulations can be developed by DOE.

4. If schedule or cost prohibits the use of an existing certified packaging, it is permitted to apply alternative risk acceptance criteria to select or design a suitable packaging and transportation system, including operational controls to establish equivalent safety (RL 1982). The regulatory requirements for normal conditions of transport shall be met or assessed. The intent is to meet performance requirements for normal conditions of transport. Exceptions are justified in the packaging safety documentation.

5. When alternative risk acceptance criteria are applied, all factors that affect risk are collectively evaluated. The variables of concern include the type of packaging, its known performance capability, transport routes, accident statistics, total mileage per year, road conditions, fire suppression capability, and operational controls such as escort requirements and restrictions under certain weather conditions.

6. A risk evaluation is performed using two quantitative assessments: the assessment of the release accident frequencies, and the assessment of the corresponding release consequences. The risk acceptance standards are based on dose consequence, consistent with the transportation regulations.

An accident category is defined as an identifiable class of accidents that could result in same or similar consequences (i.e., collision, rollover, and fire). For each accident category the corresponding accident frequency is evaluated separately. Fire release scenarios and non-fire release scenarios usually result in very different consequences and their accident frequencies are evaluated separately. Increasing the number of accident categories evaluated makes the risk assessment more realistic. As a minimum, fire accidents and non-fire accidents are separated as two categories. In other cases, collision, rollover, and fires are considered in the assessment. If one category encompasses many accident sub-categories, the most conservative (worst case) consequence is used to represent that category.

9413204.0517

RADIOLOGICAL HAZARDS

TRENCH WASTE

The wastes in the trenches are estimated to contain less than 10 Ci/ft^3 of mixed fission products (MFP) with some TRU contamination. Higher activity material also has been buried in shielded drums. The estimate of the radioactive contents for the waste removed from the trenches is assumed to be made prior to packaging.

PIPE AND CAISSON WASTE

The wastes contained in the pipes are to be excavated whole to minimize exposure to the worker and to contain the spread of contamination. Based on five 55-gal drums configuration, the pipe dimensions are estimated to be 22 in. in diameter and 15 ft long. Calculated volume associated with such a dimension is 39.60 ft^3, and a total weight of 5,029 lb is based on an estimated density of 127 lb/ft^3 for the loaded pipes. It is assumed that the pipes contain approximately 1,000 Ci/ft^3 of MFP and 1 kg of plutonium.

Shielding assumptions are based on fission product yields and 26 years of decay time. The significant remaining radionuclides in the MFP are ^{90}Sr (^{90}Y) and ^{137}Cs (^{137}Ba), which have half-lives of approximately 30 years. With the exception of ^{85}Kr ($t_{½}$ = 10.7 years) and ^{155}Eu ($t_{½}$ = 5 years), the remaining radionuclides from the fission product yield have decayed for more than seven half-lives. This indicates their values have reduced to approximately 0.8% of the original strength. For shielding analysis, it may be assumed that 39,600 Ci of MFP consists of ^{90}Sr and ^{137}Cs. The shielding evaluation should also include approximately 1 kg of plutonium per payload.

The maximum activity of special form radioactive material (solid, sealed or encapsulated) permitted in a Type A package is referred to as A_1. A_2 is the maximum activity of radioactive material, other than special form (not solid, sealed or encapsulated) radioactive material, permitted in a Type A package (49 CFR 173.403,a & b). The estimated value of A_2 (normal form) for the waste contained in the pipe is 0.4757 Ci. The total curies per pipe was calculated to be 39,666 Ci. Therefore, each pipe would be transported as highway route controlled quantity (HRCQ) radioactive material.

The caissons may contain a larger volume of waste than the pipes, but the characteristics of the waste are expected to be similar to those of the pipe waste.

CHEMICAL AND OTHER HAZARDS

9413204.0518

GAS GENERATION

The DOE-RL Order 5480.1, Chapter III, 8e(1)(c) requires: "that there are no mixture of gases or vapors in the package that could, through any credible increases of pressure or explosion, significantly reduce the effectiveness of the package."

Hydrogen gas can be generated in almost all of the buried waste as long as organic materials such as plastic and alpha-emitting radionuclides are present. Liquid organics may have already evaporated. Off-gassing of hydrogen may be possible in waste retrieved from the trenches, and is expected in waste retrieved from the pipes and the caisson due to the presence of alpha emitting TRU and organics. Steps to restrict hydrogen concentration during transportation will be required. These may include: elimination of pressure build-up by venting the package to atmosphere prior to shipment and during storage, or addition of a catalyst package to promote the recombination of hydrogen and oxygen, thus eliminating the potential for explosive gas mixture.

POISONOUS MATERIAL

Beryllium is believed be buried among the waste, possibly in pipes and caissons. Its quantity or form is not known; however, beryllium in powder form is considered to be poisonous material. Containment of beryllium during transportation will be required.

TOXIC MATERIAL

Lead is expected in the trenches, pipes, and caissons waste, and is not expected to be a packaging issue.

URANIUM AND ZIRCONIUM HAZARDS

In metal form uranium and zirconium are chemically reactive in water and air; their reactivity is increased by greater metal surface area and higher temperatures, as well as other factors. Small pieces of the metals are more reactive than large pieces and under the right conditions are pyrophoric. Precautions are required to avoid fires when handling uranium and zirconium, and must be imposed during transportation activities.

Also, uranium is oxidized in water and air to form uranium oxide. Hydrogen gas is formed in the reaction with water. Uranium hydride may be formed in the absence of adequate oxygen. The initial uranium oxide formed creates a protective coating on the uranium metal, which greatly retards additional oxidation. After an indeterminate time, the protective layer breaks due to swelling caused by the lower oxide density and is converted to the much more distinctive blue-black form of uranium dioxide. In this form, uranium dioxide does not hinder further oxidation. In addition, the uranium oxide layer cracks and crumbles as it builds. Zirconium oxidation occurs in a similar manner, although the initial protective layer of oxide does not give way to a less protective form.

The trench waste is not expected to contain appreciable quantities of these materials. The pipes and caisson may contain these materials, but the quantity may never be known with certainty. Consequently, the transportation packaging must consider their presence.

SODIUM-POTASSIUM HAZARDS

Sodium-potassium is an alloy of sodium and potassium metals, and is expected in the waste buried in the pipes and caissons. The most common form, and the one of interest here, is the eutectic (lowest melting point) composition. The eutectic material has a composition of 77.8 weight percent potassium, and a melting point of 9°F (-13°C) (NSMH 1971). Therefore, sodium-potassium is liquid at all but the coldest winter temperatures.

Sodium-potassium, like all alkali metals, reacts with air and water to form oxides and hydroxides. Since the material is liquid, it will spread out if spilled from a container, and the liquid form keeps a fresh reacting surface in contact with air. Sodium-potassium exposed to the air almost always starts to burn, producing large quantities of white smoke. The smoke contains alkali metal oxides which react with water in the air or in body fluids to form sodium and potassium hydroxides (lye and potash respectively, very corrosive and irritating). If sufficient moisture is present in the air, the hydrogen produced by reaction with the water can be ignited.

A special problem with sodium-potassium (or potassium) is the formation of a superoxide upon exposure to air. The superoxide is a powerful oxidant and also reacts with the metal to form an oxide with substantial liberation of heat. The reactions listed below show the common reactions of sodium and potassium in moist air. The reactions all produce enough heat such that smoke will evolve.

$$2\ Na\ (in\ NaK) + O_2 = Na_2O_2\ (sodium\ peroxide)$$

$$K\ (in\ NaK) + O_2 = KO_2\ (potassium\ superoxide)$$

$$(Na,K) + H_2O = (Na,K)OH + \frac{1}{2}\ H_2\ (hydroxides\ and\ hydrogen\ gas)$$

Note that hydroxides and hydrogen gas can be ignited from the heat of reaction.

All three reactions are likely when sodium-potassium is exposed to the air. Lower oxides can also be formed. Potassium superoxide is definitely formed when sodium-potassium is exposed to air.

The reaction of the superoxide with the metal proceeds according to the reaction:

$$3\ K + KO_2 = 2\ K_2O\ (Sloan\ 1976)$$

This reaction is accompanied by considerable heat generation, much more than from the oxidation or hydration of the alkali metals. It can be hazardous because the heat generated can ignite any organic vapors or other combustible material present. For example, this reaction could occur in the presence of the kerosene-Dowanol mixture supposedly used to react with sodium-potassium before shipping it out of the hot cells. If the reaction occurs in moist air where hydrogen is also being generated, the hydrogen can burn. Under conditions where the heat generated by the reaction occurs at a rate faster than heat can be conducted away, the temperature continues to rise, the reaction speeds up, and a thermal explosion occurs.

Sloan (1976) investigated the heating rates resulting from mixing of potassium/ potassium superoxide mixtures, using gram quantities of metal and milligram quantities of superoxide. This work showed that the presence of organic vapors or other combustible material was not necessary for a thermal explosion. The investigators also found, however, that at temperatures below 242°F (117°C) no reaction occurred. However, if the reactants were mixed at low temperature and then heated, an explosion occurred at rapid heating rates (180°F or 100°C per minute), but no discernible reaction occurred at slow heating rates (5°F or 3°C per minute). The superoxide was not shown to be shock sensitive.

9413204.0520

Sodium-potassium, like all alkali metals, will react with halogen-containing materials. In particular, the reaction between sodium-potassium and liquid carbon tetrachloride (CCl_4) would be quite vigorous. Sodium-potassium would react much less vigorously with carbon tetrachloride vapor; the reaction could be considered to be similar to sodium-potassium reacting with water vapor.

Sodium-potassium will not react significantly with straight hydrocarbon organics at the temperatures in the burial ground. However, a potentially hazardous situation could exist if a sodium-potassium water vapor or a sodium-potassium oxygen reaction were occurring and the heat of reaction were sufficient to ignite organic vapors. The sodium-potassium/potassium superoxide mixing reaction could also provide sufficient heat to ignite organic vapors.

Since the material was buried many years ago, any organics which were not confined likely have volatilized. An attempt should be made to determine whether there are liquid organic fluids, in jars or cans, that could be dislodged during transportation and come in contact with sodium-potassium (Brehm 1993).

The preceding discussion highlights the kind of hazards that could result if unreacted sodium-potassium were to come in contact with potassium superoxide. Note that the presence of combustible materials, particularly organic vapors or hydrogen, aggravates the situation.

APPLICATION TO TRANSPORTATION OF BURIED WASTE

The following describes how the sodium-potassium was removed from the hot cells for disposal. Unreacted sodium-potassium was sent out of the cells in 1 qt (0.91 L) stainless steel containers with O-rings, or other types of gaskets, and screw caps for the closure. When filled, they were put into containers called "paint cans" or "milk pails", providing double containment. The hot-cell waste was then transported to the burial ground inside a shielded cask. Assumptions concerning the transfer of the sodium-potassium are summarized as follows:

- The transfer of sodium-potassium to the burial ground occurred over 25 years ago.
- The sodium-potassium was placed in stainless steel containers, which are compatible with the sodium-potassium and not degraded by it.
- The containers were placed inside other containers. There were two barriers, albeit imperfect seals, between the sodium-potassium and the environment.

- The screw caps with O-rings are not absolute seals. O-rings are permeable to oxygen. The sodium-potassium would have undergone a slow oxidation process over the years. The end product in the containers is most likely a mixture of potassium superoxide, sodium peroxide, and sodium-potassium, with the dominant oxide species being potassium superoxide.

- Failure of both sodium-potassium containers, resulting in release of liquid sodium-potassium to the environment inside the burial container (the ganged-together 55-gal drums or other waste packaging), is unlikely but must be considered to have a finite probability. If spillage of the sodium-potassium to the rest of the waste package has occurred, any oxidation process, fire, or reaction with other waste should have long since been completed.

Therefore, the most likely condition of the sodium-potassium in the waste packages is a combination of sodium-potassium and potassium superoxide, reacting very slowly with the air in the containers. The container closure may have deteriorated over the years. The sodium-potassium is isolated from the rest of the material by two metal barriers, which may not be completely leak tight but probably are still functioning as a confinement. Therefore, one has to consider the possibility that unreacted sodium-potassium still exists in the waste package.

9413204.0522

The following assumptions are made based on the above discussion of sodium-potassium for potential hazards and requirements for safe operations when transferring the waste packages from the present burial site to the 200 Area.

- If the sodium-potassium is outside the original containers, reaction to the hydroxide phase is probably complete. Even so, considering the remote chance that unreacted sodium-potassium is outside the containers, it is not advisable to open the pipe packages to air during the transfer. The waste packages should be moved intact if possible.

- If the sodium-potassium is still in the original containers and unreacted, the mixing action which may occur when the waste packages are moved may generate considerable heat of reaction. In the extreme case, enough heat would be generated to cause a thermal explosion, rupturing the original containers and spreading liquid sodium-potassium around the rest of the waste package. This sodium-potassium would likely catch fire and possibly set fire to other combustible materials in the waste package. This possibility is unlikely, but precautions to mitigate it must be taken. Since there are no reliable records describing waste package contents, one must assume that any or all of the waste packages could contain unreacted sodium-potassium.

- The effects of a mixing reaction may be much less severe, with the heat being generated slowly and transferred to the contents of the waste package. This scenario would correspond to the case described by Sloan (1976) where little action was observed at a heat-up rate of 5°F (3°C) per minute, or a condition where the temperatures remained below 242°F (117°C) and no measurable reaction occurred. The proposed method of surrounding the waste package with an outer container before moving it could mitigate the effects of a thermal reaction or even an explosion. If the composite package (ganged-together 55-gal drums plus outer container) is tipped on its side for transport to the new storage site, the tipping operation and subsequent transport should be done carefully and slowly.

- The area above the waste packages could be sampled for hydrogen gas. The presence of hydrogen indicates a sodium-potassium water vapor reaction (or other chemical reaction that produces hydrogen). The problem with taking this step is that: (1) hydrogen production would be slow, and might not be detected, and (2) the presence of hydrogen probably indicates the presence of unreacted hydrogen, but the absence of hydrogen does not necessarily mean that unreacted sodium-potassium cannot be present.

- Freezing of the sodium-potassium to prevent mixing during transport may be attempted. Immersing the whole container in a liquid nitrogen jacket could be done, although the practical aspects of this operation would need to be worked out. Obviously, additional knowledge of which waste packages contain the sodium-potassium would be very useful information if an operation of this type were contemplated.

- Regardless of when the waste is to be "treated," the transportation issue must be faced. Leaving the waste where it is only postpones the inevitable issue, and there is no guarantee that one could make a better case for all the sodium-potassium having reacted at any time in the future.

A sodium-potassium fire, if one should occur, must be smothered. A Class D extinguisher (Nax or graphite powder) is preferred, although shoveling sand or dirt onto the burning sodium-potassium will also be effective.

Storage of hazardous waste must also be considered. The present rules do not permit storage of unreacted alkali metal, or their oxides or hydroxides.

9413204.0523

CONCLUSION

A potential hazard exists if the waste containers that may contain unreacted sodium-potassium need to be moved from their present location. The transfer operation must be performed carefully. Some thermal reaction from mixing sodium-potassium and potassium superoxide may be expected. Precautions against alkali metal fires should be taken, fire fighting equipment should be present, and appropriate personnel protection should be used. Measurement of hydrogen gas above the present disposal site would probably not provide a conclusive result. Absence of hydrogen is not a good indication that unreacted sodium-potassium is not present. Freezing the sodium-potassium to prevent mixing unreacted sodium-potassium and potassium superoxide should be evaluated, at least through the conceptual stage.

9413204.0524

PACKAGING EVALUATION

The following are the descriptions and evaluation of the packaging options for the 618-11 trench, pipe, and caisson waste. Packaging options are based on the source term and transfer requirements outlined in other attachments to this report. In general, this evaluation indicates that there are no "show-stopper" issues with regard to packaging availability or feasibility, but there are uncertainties and questions that remain to be answered before final packaging selection can be made.

Not specifically addressed is the option of developing a new packaging system. It was assumed for this evaluation that the aggressive schedule for the 618-11 site cleanup would not support the time needed for a new packaging design, analysis, and procurement. However, if the time is available, the cost of doing a specific packaging design (especially for the pipe or caisson waste) would be competitive with the other options discussed, and the specific design might be more viable.

TRENCH WASTE PACKAGING

OPTIONS

It is expected that the non-shielded packaging would be suitable for the waste removed from the trenches. These packaging are commonly used today at Hanford.

RECOMMENDATIONS

Existing non-shielded packaging may be used to overpack much of the excavated waste from the trenches. The quantity of waste placed in a particular package can be controlled, to ensure that package content limits are not exceeded. It is assumed that the radioactive content of the waste can be estimated. Shielding should not be required for much of the trench waste, but if shielding is needed, packaging suggested below for the pipe and caisson waste may be considered.

Because of the availability of a variety of low-cost packaging, the design of a new packaging would not be warranted for the trench waste.

UNCERTAINTIES

Because the waste characteristics and constituents are not known with certainty, selection of packaging at this time is tentative. Higher than expected dose rates that lead to unique remote handling requirements were not considered for the trench waste.

9413204.0525

NON-SHIELDED PACKAGES CONSIDERED FOR TRENCH WASTE

The following descriptions encompass common non-shielded packaging in use, or soon to be in use, on the Hanford Site. These packaging may be useful particularly when retrieving relatively low-level waste (LLW) from the trenches. Their advantages include low cost, availability, and easy operation. Assuming that they will be loaded with Type B quantities of radioactive materials, waste shipments from 618-10 or 618-11 will be transported in accordance with their onsite Safety Analysis Report for Packaging (SARP) under road closure conditions, complying with current safety requirements. Lower quantities [Type A, or low specific activity (LSA)] may be shipped in accordance with the U.S. Department of Transportation (DOT) regulations without a road closure.

TRANSURANIC METAL BOX

Vented, non-shielded, 20 years storage life, rectangular metal boxes with various dimensions. The smallest box is 5 ft, 8 in. long x 4 ft, 6 in. wide x 3 ft, 2 in. high with gross weight of 3,680 lb The largest box is 9 ft, 4 in. long x 5 ft, 8 in. wide x 6 ft, 5 in. high with a gross weight of 15,270 lb The TRU contents are limited to 1000 g. Non-fissile radionuclides are limited to 7500 times the A_2 value.

TRU Waste 55-Gallon Drums

Vented, non-shielded, 20 years storage life, polyethylene lined 55-gallon drum (DOT 17-C). Contents are limited to solid contaminated material with up to 400 g of fissile material.

TRU Liquid Waste 55-Gallon Drums

Vented, non-shielded, 20 years storage life, vented polylined 55-gallon drum. Contents may contain up to 100 g of absorbed TRU-liquid organics.

85-Gallon Retrieval Drum

This drum meets the DOT 7A criteria for Type A quantity packaging (DOE 1992). In general, the 85-gallon retrieval drum will be a galvanized carbon steel open head container. The head will be closed with a gasketed lid and a bolt ring. A 3/4 in. bung hole will be provided in the lid for installation of a carbon composite filtered vent.

Expected nominal dimensions:

Overall Height Lid On:	39.00 in.
Outside Height, Lid Off:	38.62 in.
Inside Height, Lid Off:	37.87 in.
Inside Diameter:	26.00 in.
Thickness (Body and Lid):	16 gage
Thickness (Bolt Ring):	12 gage
Bolt Size:	5/8 in. - 11 threads/in.
Maximum gross weight:	882 lb (loaded)

9413204.0526

W-113 Box Overpack

Work is underway on the design and safety analysis of a reusable overpack packaging for the transport of the boxes and 110-gallon drums retrieved from the trenches.

The W-113 Box Overpack will be designed as a reusable, single containment packaging. The packaging system shall be bottom loading. It is intended that the materials to be packaged be placed on the base of the overpack, after which the remainder of the overpack shall be placed onto the base and secured with a gasketed closure system. The side walls and top of the overpack shall be fabricated such that, when completed, the entire assembly is one piece. The box will be fabricated of carbon steel. The overpack shall be tapped and plugged in two places (opposite sides, opposing corners, upper section) to accommodate installation of two filtered vents.

The interior dimensions are capable of enclosing a rectangular box 16 X 8 X 12 ft. The designed content weight is 29,500 lb, with a gross weight not to exceed 50,000 lb. A smaller overpack could be designed capable of enclosing a rectangular box measuring 7 X 7 X 7 ft. The designed content weight would be 5,700 lb. The maximum gross weight would not exceed 11,400 lb.

PIPE WASTE PACKAGING

OPTIONS

It is anticipated that the shielded transport and/or Dry Storage System Transfer Casks would be suitable for the pipe waste. Such commercially available casks will require some modification to their design and safety documentation to accommodate a complete intact pipe.

RECOMMENDATIONS

Assuming each pipe may contain approximately 40,000 Ci of MFP and 72 Ci of transuranic (TRU) waste, the shielding of a commercial spent fuel transport/storage cask would be appropriate (such casks are designed for loadings in the magnitude of millions of curies). Casks with inner dimensions larger than 26 in. diameter by 15 ft long are needed to enable loading of a complete intact pipe.

No off-the-shelf packaging exists for intact pipes on the Hanford Site or on any other U.S. Department of Energy (DOE) Site due to the requirements of the contents and the physical size of the waste associated with the pipes. Most packaging used in commerce are designed for purposes other than those stated here. Casks used for transportation and storage of commercial spent fuel have the potential, with some modification, to be used as packaging for the pipes. The modification to the cask may include changes in the physical dimensions of the cask, addition of a venting system, and changes to safety documentation.

UNCERTAINTIES

Because the waste characteristics and constituents are not known with certainty, selection of packaging at this time is tentative. The presence of pyrophoric materials in the waste stream requires additional evaluation. The methods to load the material into the packaging requires further development. The possibility of breaking down the waste from the pipes into smaller volumes for packaging was not specifically analyzed, although the options presented for the caisson waste below would be a logical alternative in that case.

SHIELDED PACKAGES CONSIDERED FOR PIPE WASTE

The dry storage/transfer casks are large, heavy casks that are placed on railroad cars or multiple-axle, high-tonnage trailers for hauls outside a storage facility. For short trips within a storage facility, casks are transported on a specially fabricated transport trailer designed to distribute above-legal loadings and position the cask for insertion into a facility storage opening, or place them onto a pad.

9413204.0527

MC-10 Spent Fuel Dry Storage Cask

The Scientific Ecology Group (SEG) markets a spent fuel storage cask capable of storing 24 PWR assemblies. The SEG engineering department indicates that designing for the extra length cask cavity, required by this project, could be accomplished without difficulty. The MC-10 cask was tested at Idaho National Engineering Laboratory (INEL) for handling, heat transfer, and shielding capabilities, using actual PWR fuel (PNL 1987a). The topical report for storage of 24 PWR fuel assemblies in this cask, has been approved by the NRC. Storage life is a minimum of 20 years.

The MC-10 Spent Fuel Dry Storage Cask is a standalone cask, stored either vertically, or horizontally attached to a storage skid on an outdoor concrete pad. All required shielding is contained within the cask. The loaded weight is 113.3 tons. The shielding is designed for PWR fuel with an enrichment of 3.7 wt. percent ^{235}U, a maximum burn up of 35,000 MWd/MTU, 563 W of decay heat per assembly, and 10 year decay time after reactor discharge.

9413204.0528

Advantages: Meeting the requirements of 10 CFR 72, this cask is designed to survive a fire test of 1475 °F for a half hour. The fracture toughness of the containment vessel meets transportation requirements. The cask should have no trouble meeting the 1-ft drop required by the normal conditions of transport [10 CFR 71.71(c)(7)] (Regulations Management Corporation 1990). Additionally, this cask has an internal cavity large enough to accommodate three containers 30 in. in diameter by 15 ft long, provided criticality and shielding criteria are met.

Disadvantages. If the radioactivity or criticality analysis of the contents indicates that fewer than three containers can be placed in the cask cavity, it may not be an economically viable cask. The rough order of magnitude (ROM) cost, including any redesign, is $1,000,000 per cask.

NUHOMS® Dry Storage/Transfer System

The NUHOMS® System (trademark of Pacific Nuclear Fuel Services, Inc., San Jose, California) is an outdoor, precast concrete facility built for interim dry storage of multiple fuel or waste canisters. The facility provides the sidewall shielding for the storage canisters, which are shipped in shielded transfer/transportation casks, and inserted into specially designed openings in the facility. The standard design holds 24 PWR or 52 BWR fuel assemblies. Approximate non-TRU activity for 24 PWR assemblies cooled 10 years is 3,528,000 Ci. A special design, based on the earlier NUHOMS®-07P, was suggested by the manufacturer for receipt of 618-10 and 618-11 retrieved material, and a ROM estimate was made. A number of these systems have been built and are in service in the eastern United States.

The transfer packaging that is a component of the NUHOMS®-24P/52B System, has two alternate transfer/transportation cask designs (PNFS 1991). Both are capable of holding a standard PWR or BWR intact NUHOMS® Dry Shielded Canister (DSC). The onsite transfer cask design is available now for rental or purchase. Design and fabrication for the offsite transportation cask is under way for the Sacramento Municipal Utility District. The entire onsite storage system is licensed by the NRC under 10 CFR 72 for at-reactor systems storage operations.

The DSC provides the primary radioactive containment boundary for storage, and the secondary boundary for transportation. The DSC's internal dimensions would need to be custom designed for the material retrieved from the 618-10 and 618-11 Burial Grounds. The standard size DSC is not large enough to hold three 30-in.-diameter by 15-ft-long containers. Two 30-in.-diameter containers would fit into the standard DSC, providing the cavity length is extended. The criticality and shielding criteria will be addressed. The canister is filled with helium gas for transfer. The maximum loaded dry weight for the transfer cask is 95 tons.

For transfer, the DSC is placed inside a cask transporter. The maximum loaded weight for the transportation cask (10 CFR 71) is 125 tons. The NUHOMS®-24P/52B is designed to be compatible with a future 125 ton DOE rail/barge cask, for eventual offsite transportation of intact canisters. Design service life is fifty years.

Custom Designed Nuhoms® System

A custom designed NUHOMS® system was suggested by the manufacturer. It would be smaller in diameter, with a DSC approximately 30 in. in diameter. The new system would consist of DSCs fabricated from stainless steel, a transportation cask designed in accordance with 10 CFR 71, a mounting skid, a vehicle transport, and a prefabricated concrete storage module. Design and operation of the system will be similar to other NUHOMS® systems. The design life would be a 20 year minimum.

Advantages. NUHOMS® is a proven system. Each individual canister, although provided with shielding, does not require its own individual shielding. During transfer, the cask into which the DSC is inserted, provides the shielding and during storage, the HMS provides the shielding. This concept provides considerable economic benefit, since only one transfer or transport cask is required.

Disadvantages. The cost of the overall system is relatively high when compared to other options. Since only one transportation cask would need to be purchased, it could be advantageous to acquire a version designed in accordance with 10 CFR 71, and request an amendment to the NRC CoC for the payload description and basket design. However, it will be difficult to certify 618-10/11 shipments due to the lack of specific waste inventory records.

The cost of a 24 PWR DSC is estimated to be $250,000. Because the basket is more complex than that required for this project, the cost should drop to approximately $125,000 each. Transfer equipment including transfer cask, skid, lifting yoke, ramming system, positioning trailer, and storage system is estimated to be $2,000,000. This cost would increase to $3,000,000 to develop a cask fabricated to meet 10 CFR 71 criteria. The ROM estimate for the HSMs is $125,000 each.

A ROM estimate and schedule was made for the custom-designed system. The canister will be made of stainless steel - approximately 2 ft in diameter and 15 ft long. Storage life will be approximately 50 years. Delivery of the system would take approximately 2 years:

Engineering Study (173 hours x $80)=		$ 14,000
Cost of design (6 months)	=	$ 500,000
Cost of 50 canisters at 10,000	=	$ 500,000
Cost of transporter plus cask =		$ 500,000
Cost of storage module =		$3,000,000
TOTAL:	=	$4,514,000

Cost of design only (not manufacturing) = $200,000 to $400,000

9413204.0530

CAISSON WASTE PACKAGING

OPTIONS

It is expected that a wide range of shielded transport and/or Dry Storage System Transfer Casks would be suitable for the caisson waste. Those considered encompass shielded containers in use, or soon to be in use, on the Hanford Site. Transfers from the 618-11 burial grounds would require a road closure operation.

RECOMMENDATIONS

Packaging such as shielded drums may be used to overpack some excavated waste from the caissons. The quantity of waste placed in a particular package can be controlled, to ensure that package content limits are not exceeded assuming the radioactive content of the waste can be estimated. Some waste will consist of low enough radionuclide content to use non-shielded packaging. Also discussed are several commercially available spent fuel shipping casks. These packages would be considered for the transfer of higher level materials in the caissons. The ability to store waste in these packages was not analyzed. Because the waste is uncharacterized, selection of packaging at this time is tentative. The presence of reactive materials in the waste stream requires additional evaluation. The methods to load the material into the packaging require further development.

SHIELDED PACKAGES CONSIDERED FOR CAISSON WASTE

EBR-II/21PF-1

This is a non-vented cask used for onsite transfer and storage of EBR-II spent fuel. The inner containment consists of either a single or double encapsulated stainless steel container. For single encapsulation a 5-in. pipe is used and tested to meet the special form requirements. The cask has a cavity of 6 in. (ID) x 42 in. with 5 in. of lead shielding. Contents may include up to 4,000 g of dry plutonium and uranium as carbides, oxides and/or nitrides. This package is approved for use on the Hanford Site.

EBR-II (Zircaloy Hull)/21PF-1

This cask is similar to the EBR-II cask. However, it has an internal cavity 13 in. (ID) x 54 in. with 3.5 in. of lead shielding. This package is approved for use on the Hanford Site.

9413204.0531

Lead-Lined Drum/21PF-1 Packaging System

This vented drum provides 5.9 in. of lead shielding. It has an internal cavity of 10 in. diameter and 20 in. long. The drum is authorized for onsite transfer of solid or absorbed radioactive material not exceeding 6,000 times the A_2 value. The fissile contents is limited to 100 g. This package is approved for use on the Hanford Site.

Internally Shielded 55-Gallon Drums

The reinforced concrete lined 55-gallon drum comes with three cavity configurations. The cavity dimensions are 11.5 in. ID x 31.4 in., 15 in. ID x 32.4 in., 18 in. ID x 32 in. with a payload of 460 lb, 730 lb, and 990 lb respectively. The contents are limited to 20 Ci of non-fissile, non-TRU, contaminated solid material. This package is approved for use on the Hanford Site.

Alpha Caisson Cask

Work is underway on the design and safety analysis of a reusable Alpha Caisson Packaging System (ACPS) for the transfer of RH-TRU waste from the Alpha Caissons. The ACPS will be approved for use as an onsite intra-area Type B Fissile packaging.

The maximum gross weight of the ACPS shall not exceed 25,000 lb. The ACPS shall be designed such that the inner cavity of the cask will provide a snug fit for an inner liner of 55-gallon drum size and capacity.

Transnuclear TN-12Y

The international version, called the TN-12, is used as a transportation cask and was designed and developed by Transnucleaire, S. A., the French parent company of Transnuclear, Inc. Currently, there are 90 of these casks in use worldwide. The TN-12 has been tested and is a certified cask, but not in the United States. The useful life of this cask will be greater than 10 years.

Because ferritic steels are considered by the NRC to be susceptible to brittle fracture in the thicknesses used in this cask, the designers of the TN-12Y would have substituted steel of the type used in the TN-BRP and TN-REG casks, which has been found to be acceptable to the NRC for a transportation cask. The inner cavity is 4 ft in diameter by 15 ft long. The loaded weight for transport is 106.9 tons.

9413204.0532

Advantages: This is one of the few casks that may have a long enough internal cavity to hold a caisson overpack without modification to its design. The smaller size may be easier to manipulate in the burial ground. A majority of the analysis, testing, and paperwork required for producing a SARP for NRC licensing, has already been done. The years of extended use of the TN-12 cask for shipping irradiated fuel in Europe, and its compliance with the International Atomic Energy Agency (IAEA), 10 CFR 71 and 49 CFR 173 requirements, shows that the basic design of this cask is proven.

Disadvantages: The internal diameter of the payload cavity will accommodate only one caisson overpack and, therefore, approximately 50 casks will need to be purchased. Changing the cask may invalidate any existing test data that could be used for the SARP. The usual transport mode is a specially designed rail car. Changing the forged steel to an NRC-approved, fracture tough material may be required. Costs will range from $600,000 to $1,000,000 each.

Transnuclear TN-BRP and TN-REG

The TN-BRP and the TN-REG are almost identically-made casks, with the exception that the TN-BRP is sized for 44 BWR spent fuel assemblies, and the TN-REG is sized to carry 20 PWR spent fuel assemblies. Both of these DOE-owned casks are in compliance with the requirements of 10 CFR 71. The CoC Number 9202/B(U)F (expires 6/30/94) was assigned to the TN-BRP, and CoC Number 9206/B(U)F (expires 5/31/95) was assigned to the TN-REG. The casks were designed to be in compliance with 10 CFR 72, but the NRC has not approved the topical reports as yet. Both were designed to have a 20 year life. Initial fuel enrichment for both is 3.5 wt percent ^{235}U.

Advantages: Both of these casks have been designed, fabricated and fully licensed for offsite transportation. The materials used are relatively low cost and can be decommissioned by burial, yet they meet all regulatory requirements.

Disadvantages. Neither cask is quite long enough to contain a 15-ft long payload. A slightly modified version would need to be fabricated. The diameter of the TN-BRP is not large enough to fit three 30 in. in diameter containers into the cask cavity. A secondary lid may be considered so that the cask can be stored full for a number of years, the seal checked and replaced if required, and then transported. Both casks were designed to be transported by rail in a horizontal position, but may be stored vertically. The TN-REG is transported on its own, specially-designed shipping frame. Both designs are equipped with access and vent ports and two gas sampling ports for leak testing. New licensing would need to be developed for the modified size and payload type or an onsite SARP would need to be written. Either approach could use much of the documentation already developed for these two casks. The cost of 50 casks of similar design would be approximately $600,000 each.

NAC-S/T Storage Cask, NAC-STC Dual-Purpose Cask and STB Dual-Purpose Cask

All the storage casks made by the Nuclear Assurance Corporation (NAC), are shielded standalone packages; a number of versions have topical reports approved by the NRC. They are used for transfer from the loading site to an outdoor pad, where they are stored individually in a vertical position. Both of the casks have an anticipated 60 year life.

The NAC-S/T Storage Cask (NAC SC/100) is designed to hold 26 to 28 PWR intact spent fuel assemblies. It weighs 100 tons when fully loaded. The cavity atmosphere is helium. The cask stands 181.3 in. high and is 94.3 in. in diameter. The cavity is 164 in. X 64.7 in. (ID).

The NAC-STC Dual-Purpose Cask is similar to the NAC-S/T Storage Cask, but with an additional lid, impact limiters, and some small dimensional differences. The cask cavity is 165 in. X 71 in. (ID). The loaded handling weight is 125 tons with impact limiters.

The STBC Dual-Purpose Cask was designed for transportation of BWR fuel assemblies. It is similar in design to the other two casks, but is longer. It's cavity is 181 in. X 67 in. (ID).

Advantages. The NAC-S/T storage system has been licensed by the NRC, fabricated, and used in a number of variations. The NAC-I26 S/T and NAC-I28 S/T are used for PWR assembly storage, and the NAC-C28 S/T contains consolidated PWR fuel. This reflects a proven design and the NAC ability to modify their product to suit their customer's needs. The NAC-STC Dual-Purpose Cask should be receiving a transportation CoC from the NRC sometime this summer.

Disadvantages. All except the STBC Dual-Purpose Cask are too short for intact retrieval of pipe units from 618-11 and 618-10 Burial Grounds. While the cavity of the NAC-STC Dual-Purpose Cask is large enough to hold three, 30 in. diameter containers, the NAC-S/T cask can accommodate only two. The cost of the NAC-STC Dual-Purpose Cask may keep it from being competitive.

For transportation purposes, the NAC-STC Dual-Purpose Cask, because it will meet all specific requirements of 10 CFR 71, is the preferred option of the two casks. Currently, all versions of NAC's storage casks can be used for onsite transfer only; the NAC-STC Dual-Purpose Cask, suitable for transportation per 10 CFR 71, has been designed and is under review by the NRC for licensing. The NAC-S/T Storage Cask may not be transported on a public road.

The cost for one NAC-S/T is estimated to be $1,000,000. The ROM cost for the NAC-STC Dual-Purpose Cask is estimated to be $1,200,000.

Transnuclear TN-24

This prototype of this storage cask (TN-24P) was tested at INEL for handling, shielding, and thermal characteristics, using fuel cooled for approximately four years (PNL 1987b). The cask is stored vertically on an outdoor pad. The internal diameter is 63 in.. The total weight is 107 tons with a 20 year design life.

9413204.0534

A number of safety analyses will need to be made to ensure safety during transfer. While some criteria used for evaluating container adequacy under 10 CFR 72 is similar to that used for 10 CFR 71, a considerable number do not coincide. Onsite transfer criteria will be investigated during the onsite SARP evaluation.

Advantages. The TN-24 is a well tested storage system, designed to hold BWR fuel as well as PWR fuel. Obtaining the required length in this design should not be a problem. Because of the large cavity size, only 25 casks may need to be acquired to store the material from the burial ground. A special heavy duty rail car and horizontal shipping cradle already exist for this cask.

Disadvantages. The cask containment vessel is made from carbon steel; therefore, a minimum temperature limit for transfer may be required to preclude a brittle fracture failure. However, the NRC concluded that brittle fracture was not a credible failure mode for the TN-24 cask body for storage. If a minimum temperature is required for transfer, the summer heat could affect the clean up schedule.

Assuming quantity production of this cask (including lengthening and other required modifications) the cost is estimated to be $1,000,000 each. It will take a year to have the first cask fabricated.

MACSTOR System

Transnuclear, Inc. and Atomic Energy of Canada Limited (AECL) are jointly developing a concrete-shielded Modular Air-Cooled Canister Storage System (MACSTOR) that utilizes a concrete module vault to store 12 PWR or 32 BWR assemblies in transferable canisters. The MACSTOR module is designed in accordance with the requirements of 10 CFR 72.

It is an above-ground rectangular, reinforced monolithic, concrete structure approximately 24 X 60 X 20 ft. It is designed to hold 20 Fuel Storage Canisters. Weather-protective covers are used above each canister storage location. Since the renewal cycle of an approved NRC topical report is 20 years, it can also be assumed that the minimum design life for this system is the same. The cavity is filled with an inert gas. The FSC has a steel, cylindrical shell with a interior cavity size of 50 in. X 13.5 ft. A 38.5 in. diameter version may also be available.

The Canister Transfer System (CTS) consists of a Transfer Cask, a transport trailer, and a canister alignment fixture. The cask loads from the top, but its design incorporates a thick steel bottom plug that is removed to allow the FSC to be lowered from the cask into the MACSTOR module. At the MACSTOR module, the gantry, with redundant hydraulic jack lift features, is used to move the Transfer Cask from the trailer to the top of the module, where it is secured to the canister alignment fixture in the vertical position. The alignment fixture provides support for the Transfer Cask and shielding for the FSC during the unloading operation. The hydraulic jack on the gantry cask-handling trolley lowers the FSC into the module.

Advantages. The shielding scheme is designed to eliminate costly thick-wall steel or lead for each canister, and during the storage mode, substitute less expensive concrete. The Transfer Cask in reusable, and only one is required. The FSC meets the requirements of 10 CFR 72, as well as the American National Standards Institute (ANSI) 57.9 Design Requirements for an Independent Spent Fuel Storage Installation. The MACSTOR System was subjected to a full-scale Heat Transfer Test at AECL facilities during 1990.

Disadvantages. The storage module is designed for cooling high burnup fuel, with extra internal space for passive, air circulation that may not be necessary for storage of the material retrieved from the 618-10 and 618-11 Burial Grounds. The gantry crane is somewhat specialized and may not be applicable to other work on the Hanford Site when the loading is finished. It may be a long lead-time procurement item as well. All the modules, canisters, casks, and equipment would need to be lengthened, causing a considerable redesign of the entire system.

Costs for this type of storage arrangement are quoted at approximately $265,000. This seems unrealistically low for a system that includes a large sophisticated crane, an alignment device, a trailer, and a canister for each group of 12 PWR assemblies. It may be that only the module and canisters are included, since most of the other equipment may be used elsewhere once the canisters are placed. The module, FSC, and Transfer Cask can all be fabricated concurrently, but since the Transfer Cask will most likely take the longest time to fabricate, loading may not be able to start until 18 months after the award of the contract.

Castor V/21

The Castor V/21 has a one-piece, cylindrical, nodular cast-iron/graphite cask body, developed by Gesellschaft für Nuklear-Service mbH in Germany, and sold in this country by Chem-Nuclear Systems. It was tested at INEL for handling characteristics, heat transfer, and shielding, using 21 PWR spent fuel assemblies (PNL 1986). The topical report was approved by the NRC in 1990, signifying compliance with the provisions of 10 CFR 72. Fifteen casks have been loaded and put into service at a nuclear power plant in Virginia.

While the NRC has approved this material for storage casks, it has not approved nodular cast-iron for use in transportation casks. "The U.S. Nuclear Regulatory Commission (NRC) is opposed to the use of ductile iron (DI) for transportation of commercial spent fuel for three reasons:

1. DI material response to dynamic loading near flaws has not yet been resolved to the NRC's satisfaction.

2. The NRC feels that test procedures and brittle fracture criteria have not been resolved.

3. The NRC is not confident that quality assurance (QA) has been adequately incorporated into fabrication procedures."

9413204.0536

The Castor V/21 is a standalone cask stored upright on an outdoor pad. The overall length of the cask is 194.4 in. with a sidewall thickness of 14.9 in., excluding the circumferential cooling fins. The cask cavity has a diameter of 60.1 in. and a length of 163.5 in. The loaded weight of the cask is 117 tons. Twenty-year storage period is assumed (length of time of the NRC license).

Advantages. This cask has a relatively simple design and fabrication scheme that appears to be non-labor-intensive. The cask is in production, with fifteen already loaded and put into service, and nine more to be delivered by mid-1994. The cask can be placed horizontally in a shipping cradle that can be attached, either to a rail or flatbed trailer. It has an "A-frame" trailer that allows it to be transferred in the vertical position, but with very little ground clearance. Driving the latter vehicle onto and off of a flatcar, for transfer, could eliminate the cost of the high-capacity crane, that otherwise would be required.

Disadvantages. The internal cavity is slightly over 60 in. in diameter, which makes it marginal for the transfer of two caisson overpacks. While lengthening the cask may not be difficult, changing the diameter would require a whole new design. It may also be difficult to find enough quality casting capacity to make the containers in the time required. Even for onsite transfer, the brittle fracture problem will need to be satisfactorily addressed. It has not been approved by either the NRC or DOE for transport, and does not meet the provisions of 10 CFR 71. Many engineers feel that the considerable body of testing done on DI casks, shows that brittle fracture is not a problem, but it is still an open question at this time. Also, the vendor is not willing to make an ROM estimate at this time.

Ventilated Storage Cask System

The Ventilated Storage Cask (VSC) is a dry storage system which is produced by Sierra Nuclear Corporation. The VSC is available in a size which will store up to 24 PWR or 52 BWR assemblies (VSC-24). A VSC capable of storing up to 17 PWR or 40 BWR assemblies (VSC-17), is also available and has been tested at the INEL (PNL 1992). A custom VSC design can be easily developed (as a modification of the basic design) to accommodate Site-specific requirements. In the VSC system, the irradiated fuel is contained in a Multi-Assembly Sealed Basket (MSB) that is stored vertically in the central cavity of a Ventilated Concrete Cask (VCC). The VCC is ventilated by internal air flow paths (unfiltered) that create a "chimney" effect and allow decay heat removal by natural circulation.

The MSB which fits inside the concrete cask consists of a 62-in. (outer diameter) steel shell (1 in. thick) which contains the fuel in square tubing. The top of the MSB is covered with a shield lid and a structural lid. The MSB can be made from 176 in. to 189 in. long.

The VCC is a concrete cask with a 70.5 in. inner diameter. The concrete is 29-in.-thick Type II Portland Cement (4000 psi) that is reinforced with rebar cages. Four large air ducts are provided at the bottom of the cask (inlet) and at the top of the cask (outlet) for cooling. The ducts are steel-lined penetrations that take non-planar paths to minimize radiation streaming. The top of the VCC is covered by a 0.75 in. steel plate. Shielding for the top of the fuel is provided by the MSB as described above.

The Transfer Cask used for the commercial fuel application consists of a cylinder sized to fit the MSB. The Transfer Cask has a top cover which extends over the MSB to prevent it from being inadvertently lifted out of the top of the Transfer Cask while being lowered into the VCC. It also has a hydraulically operated shielded door at the bottom, to allow lowering the MSB into the VCC.

The MSB for commercial use have a ROM cost of $250,000 each. The VCCs are fabricated at the location where they will be used. Costs would vary, due to construction crew mobilization costs, crew size and the quantity requested. The ROM cost for one VCC would be $200,000; whereas, the cost for 30 VCCs would be $100,000 each. The Transfer Cask has a ROM cost of $400,000.

Advantages. Because of the inexpensive method of fabrication and low material costs, the cost of the VSC would be lower than an equivalent steel cask. In addition, the design of the VCC shielding should provide lower external radiation levels than similar steel casks. The VSC system was designed and analyzed in accordance with 10 CFR 72, and a topical report has been approved by the NRC. The system has a conservative lifetime of at least 50 years.

Disadvantages: The MSB, which fits into the concrete cask, is an integral part of the VSC system and would not be suitable for the intended application. However, it would not be difficult to design a suitable MSB.

REFERENCES

Cadwell, J. J., 1971, *Waste Management Records On In-Soil Stored Radioactivity*, (external letter to T. A. Nemzek, U.S. Atomic Energy Commission, July 21), Battelle Northwest, Richland, Washington.

DOE, 1985, *Safety Requirements for the Packaging and Transportation of Hazardous Materials, Hazardous Substances, and Hazardous Wastes*, DOE 5480.3, U.S. Department of Energy, Washington, D.C., July 9, 1985.

DOE, 1986, *Hazardous Material Packaging for Transport - Administrative Procedures*, DOE 1540.2, U.S. Department of Energy, Washington, D.C., September 30, 1986.

DOE, 1991, *Summary of The International Ductile Iron Progress Meeting*, U.S. Department of Energy, Washington, D.C.

DOE-RL, 1989, *Hanford Plant Standards Design Criteria Manual*, Revision various, DOE-RL, Richland, Washington.

DOT, 1992, *Specifications for Packaging*, Title 49, Code of Federal Regulations, Part 178 (49 CFR 178), U.S. Department of Transportation, Washington, D.C., 1992.

DOT, 1992, *Shippers - General Requirements for Shipments and Packaging*, Title 49, Code of Federal Regulations, Part 173 (49 CFR 173), U.S. Department of Transportation, Washington, D.C., 1992.

McMaster-Carr, 1984, *Catalog 90*, McMaster-Carr Supply Company, Los Angeles, California.

NRC, 1992, *Packaging and Transportation of Radioactive Material*, Title 10, Code of Federal Regulations, Part 71 (10 CFR 71), U.S. Nuclear Regulatory Commission, Washington, D.C., 1992.

Nuclear Systems Materials Handbook (NSMH), 1971, Book 6, Report TID-26666.

PNFS, 1991, *Nuhoms® Spent Fuel Storage System Description and Planning Guide*, MKT91-01E, Pacific Nuclear Fuel Services, Inc., San Jose, California.

PNL, 1992, *Performance Testing Analyses of the VSC-17 Ventilated Concrete Cask*, PNL-7839, Pacific Northwest Laboratory, Richland, Washington.

Regulations Management Corporation, 1990, Title 10, *Code of Federal Regulations*, Parts 51-199, Vol. II, Regulations Management Corporation, Bloomingdale, Indiana.

PNL, 1987a, *The MC-10 PWR Spent-Fuel Storage Cask: Testing and Analysis*, PNL-6054, Pacific Northwest Laboratory, Richland, Washington.

PNL, 1987b, *The TN-24P PWR Spent-Fuel Storage Cask: Testing and Analysis*, PNL-6054, Pacific Northwest Laboratory, Richland, Washington.

9413204.0538

PNL, 1986, *The Castor-V/21 PWR Spent-Fuel Storage Cask: Testing and Analyses*, PNL-5917, Pacific Northwest Laboratory, Richland, Washington.

RL, 1982, *Safety Requirements for the Packaging of Fissile and Other Radioactive Materials*, RL 5480.1 Change 1, Chapter III, U.S. Department of Energy, Richland Operations Office, Richland, Washington, June 24, 1982.

Roberts, J. P., 1990, *Dry Spent Fuel Storage Licensing At Reactor Sites*, Proceedings Institute of Nuclear Material Management, Spent Fuel Management Seminar VII, Washington, D.C.

Sloan, S. A., 1976, "The Reaction of Potassium Superoxide in Excess Potassium," *Proceedings of International Conference on Liquid Metal Technology in Energy Production*, CONF-76503-P2, pp. 675-680.

Stuart, I. F, 1990, *The Development of the Transportable Storage Cask*, Nuclear Assurance Corporation, Norcross, Georgia.

Voiland, E. E., 1970, *Waste Burial Ground Data Pacific Northwest Laboratory Sites*, (external letter to Frank S. Zvonar, U.S. General Accounting Office, February 2), Battelle Northwest, Richland, Washington.

Wang, O. S., R. F. Carlstrom, G. A. Coles, and M. V. Shultz, 1991, *Risk Assessment of Intra-Area Transport of Radioactive Waste Using the TRUPACT-II Standard Waste Box*, WHC-SA-1276-FP, Westinghouse Hanford Company, Richland, Washington, December 1991.

WEC, 1991, *MC-10 Spent Fuel Dry Storage Cask*, Westinghouse Electric Corporation, Pittsburgh, Pennsylvania.

WHC, 1992, *Equivalent Safety Task Team Results*, WHC-SD-TP-RPT-002, EDT 159492, Westinghouse Hanford Company, Richland, Washington, July 20, 1992.

WHC, 1988, *Remote Handling of Transuranic and Low Level Waste in the Waste Receiving and Processing Facility*, WHC-SD-WM-ES-102, Rev. 0, Westinghouse Hanford Company, Richland, Washington.

WHC-CM-2-14, *Hazardous Material Packaging and Shipping*, Westinghouse Hanford Company, Richland, Washington.

9413204.0539

THIS PAGE INTENTIONALLY
LEFT BLANK

9413204.0540

APPENDIX E
COST ANALYSIS

9413204.0541

COST ANALYSIS

Costs analyses action for alternatives:

Rough Order Of Magnitude (ROM) costs included in this section are based on assumed conditions. Costs associated with a removal action were estimated due to the lack of specific waste inventory information. The cost estimate for the removal action was based on 1993 prices and policies. Waste volume and packaging requirements were based on "worst case"assumptions.

9413204.0542

NO ACTION ALTERNATIVE

Continued surface radiological surveys/vegetation control	$ 2,500/year
Annual soil and vegetation sampling and analysis	$10,000/year
TLD monitoring	$ 4,000/year
Air sampling and analysis	$20,000/year
Administrative fees	$15,000/year
TOTAL	**$51,500/year**

INCREASED MONITORING

New monitoring wells	
drilling and construction of wells (4)	$600,000
soil sampling and analysis	$ 80,000
Groundwater sampling and analysis (4 wells)	$ 80,000/year
30% contingency	$228,000
TOTAL =	**$988,000**

REMOVAL AND MONITORED STORAGE

Three types of disposal units are associated with the 618-11 brutal ground, pipe units, caissons and trenches. Each requires different engineering strategies for waste removal. Two engineered retrieval options are offered for pipe unit waste retrieval.

Pipe Units - *50 Removed INTACT Technique*

Assume all 50 units contain waste
No cost assessed for placement and monitoring of the vertical storage module. It would be located on the 200 area plateau, but would not be subject to Solid Waste Management Central Waste Complex (CWC) fee schedules.

Add Rail Spur to site (1 mile)	$ 1,000,000
Excavation (backhoe)	$ 30,000
Sleeve material costs (50) 24 in.,40 gauge steel	$ 50,000
Transportation & Above ground storage system	$ 5,000,000
TRU boxes for 5% soil assumed contaminated	$ 700,000
Storage of TRU boxes at CWC	$ 900,000
Rail transport to 200W	$ 400,000
Crane costs	$ 20,000
Containment Structure	$ 500,000
Ventilation and Safety features	$ 300,000
Analytical Services	$ 350,000
30% contingency	$ 4,300,000
	$13,550,000

Personnel

Adm/Eng Support	@ $70/hr	X 16000 hrs	$ 1,120,000
HPTs	@ $50/hr	X 3000 hrs	$ 155,000
D&D	@ $40/hr	X 4000 hrs	$ 165,000
Equip. Operators	@ $50/hr	X 3000 hrs	$ 155,000
Truck drivers	@ $50/hr	X 2000 hrs	$ 100,000
30% contingency			$ 500,000
			$ 2,200,000

SUBTOTAL INTACT TECHNIQUE **$15,750,000**

Pipe Units - *Telerobotic Technique*

Assume fifty units filled with waste to 60% capacity
Assume all waste will be stored at Solid Waste Management Central Waste Complex; Rates are $30/ft^3 for disposal of LLW and $135/ft^3 for TRU storage. Disposal and storage fees are based on current cost schedules calculated for waste received in 55 gallon drums, stored on pallets.

Add rail spur to site	$ 1,000,000
Remote equipment	$ 500,000
EBR II (21PF-1) casks (465)	$ 9,300,000
Shielded containment structure	$ 700,000
Rail transport to 200 W	$ 400,000
TRU Boxes for soil & misc.	$ 700,000
Sleeve material; 36 in., 40 gauge steel (50)	$ 50,000
Dust control	$ 10,000
Crane & backhoe	$ 60,000
Sonic Drill	$ 500,000
Storage of TRU boxes	$ 900,000
Storage of EBR II (21PF-1) casks (based on exterior dimensions)	$ 1,000,000
Analytical Services	$ 350,000
30% contingency	$ 4,530,000
	$ 20,000,000

Personnel

Adm/Eng Support	@ $70/hr	X 16000 hrs	$1,120,000
HPTs	@ $50/hr	X 3000 hrs	$ 155,000
D&D	@ $40/hr	X 4000 hrs	$ 165,000
Equip. Operators	@ $50/hr	X 3000 hrs	$ 155,000
Truck drivers	@ $50/hr	X 2000 hrs	$ 100,000
30% contingency			$ 500,000
			$2,200,000

SUBTOTAL TELEROBOTIC TECHNIQUE $22,200,000

LARGE DIAMETER CAISSON WASTE REMOVAL

Assume four units filled with waste to 60% capacity
Assume all waste will be stored at Solid Waste Management Central Waste Complex; Rates are $30/ft^3 for disposal of LLW and $135/ft^3 for TRU storage. Disposal and storage fees are based on current cost schedules calculated for waste received in 55 gallon drums, stored on pallets.

Shielded Containment Structure	$ 700,000
Remote equipment	$ 500,000
TRU Boxes (10)	$ 100,000
EBR II (21PF-1) casks (166)	$ 3,320,000
Rail Transport to 200W	$ 200,000
Dust Control	$ 10,000
Crane & backhoe	$ 5,000
Storage of TRU boxes	$ 130,000
Storage of EBR II (21PF-1) casks	$ 355,000
Analytical services	$ 75,000
30% Contingency	$ 1,600,000
	$ 6,995,000

Personnel

Adm/Eng Support	@ $70/hr	X 16000 hrs	$1,120,000
HPTs	@ $50/hr	X 3000 hrs	$ 155,000
D&D	@ $40/hr	X 4000 hrs	$ 165,000
Equip. Operators	@ $50/hr	X 3000 hrs	$ 155,000
Truck drivers	@ $50/hr	X 2000 hrs	$ 100,000
30% contingency			$ 500,000
			$2,200,000

Caisson SUBTOTAL	$9,200,000

9413204.0545

TRENCH WASTE REMOVAL (3 trenches)

assume: 18,500 yd^3 Topsoil volume (disposed as LLW)
49,000 yd^3 buried waste volume with associated swelled soil (stored as TRU)

Assume all waste will be stored at Solid Waste Management Central Waste Complex; Rates are $30/ft^3$ for disposal of LLW and $135/ft^3$ for TRU storage. Disposal and storage fees are based on current cost schedules calculated for waste received in 55 gallon drums, stored on pallets.

Excavation	$ 400,000
TRU (300 cu.ft) Boxes (need 4400)	$ 44,000,000
Rail transport to 200W	$ 15,000,000
Haul top 6' soil by truck	$ 200,000
Low level waste burial fees (@ $800/$yd^3$)	$ 1,500,000
Containment structure	$ 2,000,000
TRU Waste storage fees (@ $3645/$yd^3$)	$178,600,000
30% contingency	$ 72,500,000
	$314,200,000

Personnel

Adm/Eng Support	@ $70/hr	X 64000 hrs	$4,500,000
HPTs	@ $50/hr	X 42000 hrs	$2,100,000
D&D	@ $40/hr	X 60000 hrs	$2,400,000
Equip. Operators	@ $50/hr	X 42000 hrs	$ 900,000
Truck drivers	@ $50/hr	X 12000 hrs	$ 600,000
30% contingency			$3,000,000
			$10,800,000

TRENCH EXCAVATION SUBTOTAL $325,000,000

REMOVAL AND STORAGE ALTERATIVE *TOTAL* (to the nearest million dollars)

(This total was based on alternative action assumptions described in the text)

Pipe units (removed intact or pieced)	$ 21,000,000
Caissons (waste surgically removed)	$ 9,000,000
Trench Excavation	$325,000,000
	$355,000,000

9413204.0546

FEASIBILITY DEMONSTRATION

Assume 2 pipe units will be removed intact at the 618-10 Burial Ground. Demonstration will use techniques described in the INTACT REMOVAL STRATEGY for pipe unit removal at 618-11. Waste will be shipped in two individual shielded transport casks at the 200 Area Solid Waste Complex by truck.

GPR to locate units	$ 5,000
Cone Penetrometer and logging	$ 25,000
Transportation and Casks (2)	$ 2,000,000
Containment Structure	$ 500,000
Sleeve Material	$ 2,000
Crane and Backhoe	$ 10,000
Dust control	$ 2,000
Restabilize area	$ 50,000
30% Contingency	$ 776,000
	$ 3,370,000

Personnel

Adm/Eng Support	@ $70/hr X 16,000	$1,120,000
HPTs	@ $50/hr x 1500	$ 75,000
D&D	@ $40/hr X 2000	$ 80,000
Equip. Operators	@ $50/hr X 1500	$ 75,000
Truck drivers	@ $50/hr X 1000	$ 50,000
30% contingency		$ 400,000
		$1,800,000

SUBTOTAL $ 5,170,000

9413204.0547