AR TARGET SHEET

The following document was too large to scan as one unit; therefore, it has been broken down into sections.

DOCUMENT#	BNFL-5193-RCRA-01
TITLE	River Protection Project Waste Treatment Plant Dangerous Waste Permit Application (5 volumes)
EDMC#	0053076
SECTION	2 of 11

4.4.5. Land Treatment [D-7]

The operation of the RPP-WTP does not involve the land treatment of dangerous waste. Therefore, the requirements of WAC 173-303-655, "Land Treatment", do not apply to the RPP-WTP.

4.4.6. Air Emissions Control [D-8]

Information regarding air emissions control is provided in the following sections:

- Pretreatment vessel ventilation system description – section 4.2.2
- LAW pretreatment vessel ventilation system description – section 4.2.3
- LAW vitrification offgas treatment system description – section 4.2.4
- HLW vitrification offgas treatment system description – section 4.2.5
- Process vents – see Appendix 4E (40 CFR Part 264 Subpart AA) – section 4.3.2
- Equipment leaks (40 CFR Part 264 Subpart BB) – section 4.3.2
- Tanks and containers (40CFR Part 264 Subpart CC) – section 4.3.2

4.4.7. Waste Minimization [D-9]

Waste minimization information is presented in Chapter 10.

4.4.8. Groundwater Monitoring for Land-Based Units [D-10]

The groundwater monitoring requirements found in WAC 173-303-645, "Releases from regulated units", do not apply to the RPP-WTP, since it is not operated as a regulated dangerous waste surface impoundment, landfill, land treatment area or waste pile, as defined in WAC 173-303-040. Therefore, groundwater monitoring is not required.

4.4.9. Functional Design Requirements

The RPP-WTP will be designed to comply with consensus-recognized design codes and specifications. *Basis of Design* (BNFL 1998b) provides the design basis for the structures, systems, and components of the RPP-WTP.

Figure 4-1. Simplified Process Flow Diagram for the RPP-WTP

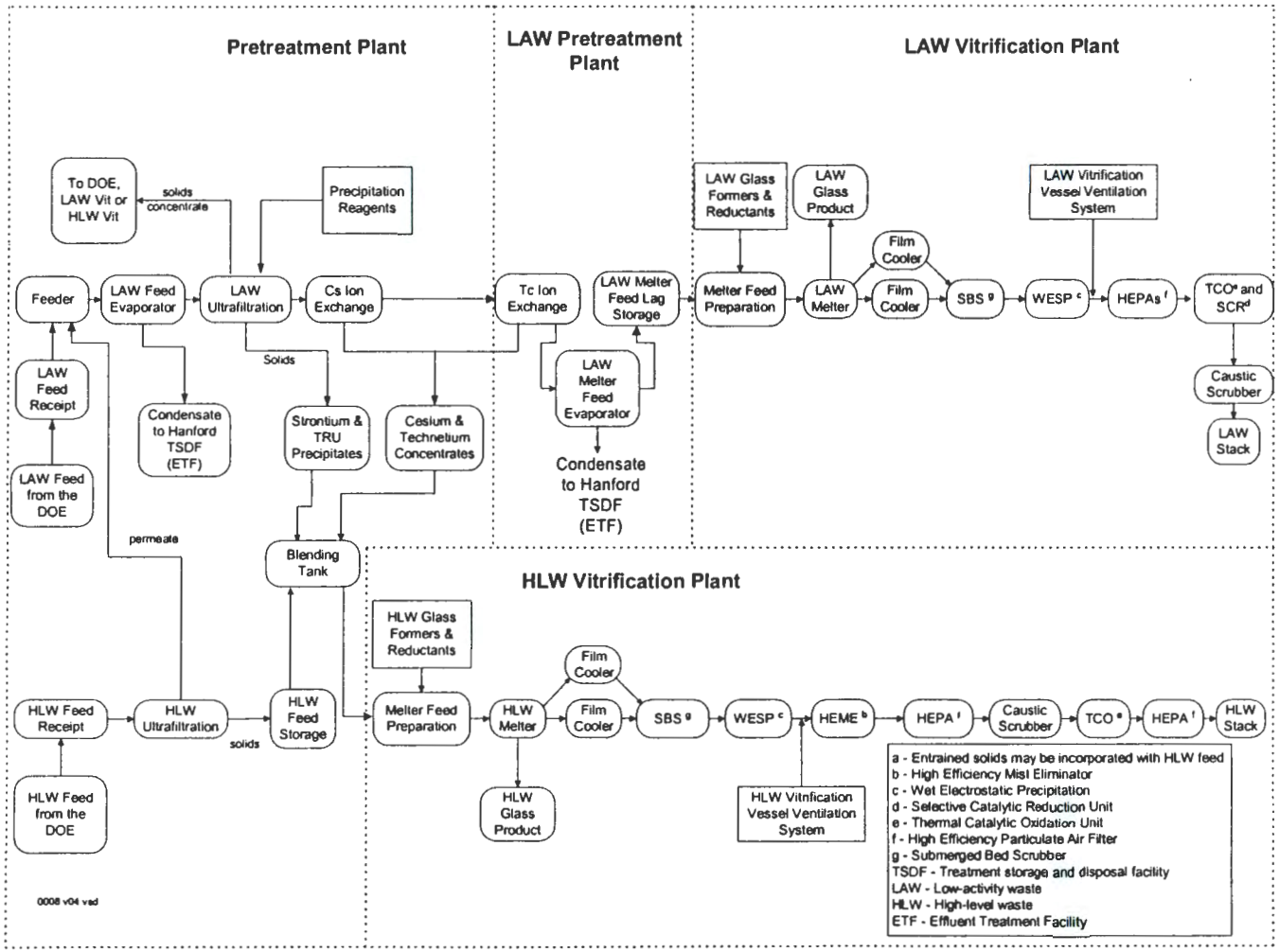

Figure 4-2. Simplified Process Flow Diagram for Pretreatment Plant

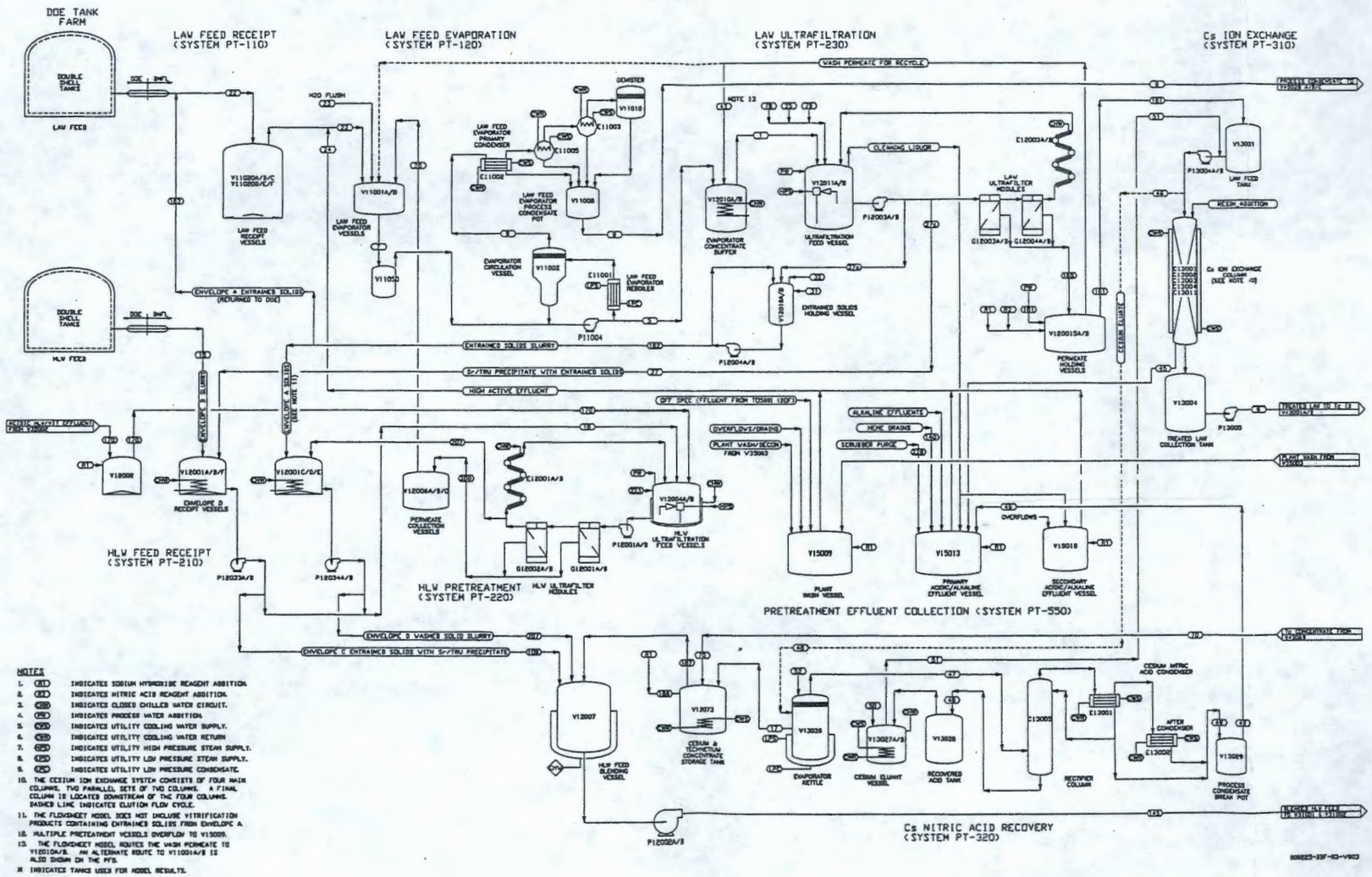

Figure 4-3. Simplified Process Flow Diagram of the LAW Feed Receipt and Evaporation Systems (PT Systems 110, 120)

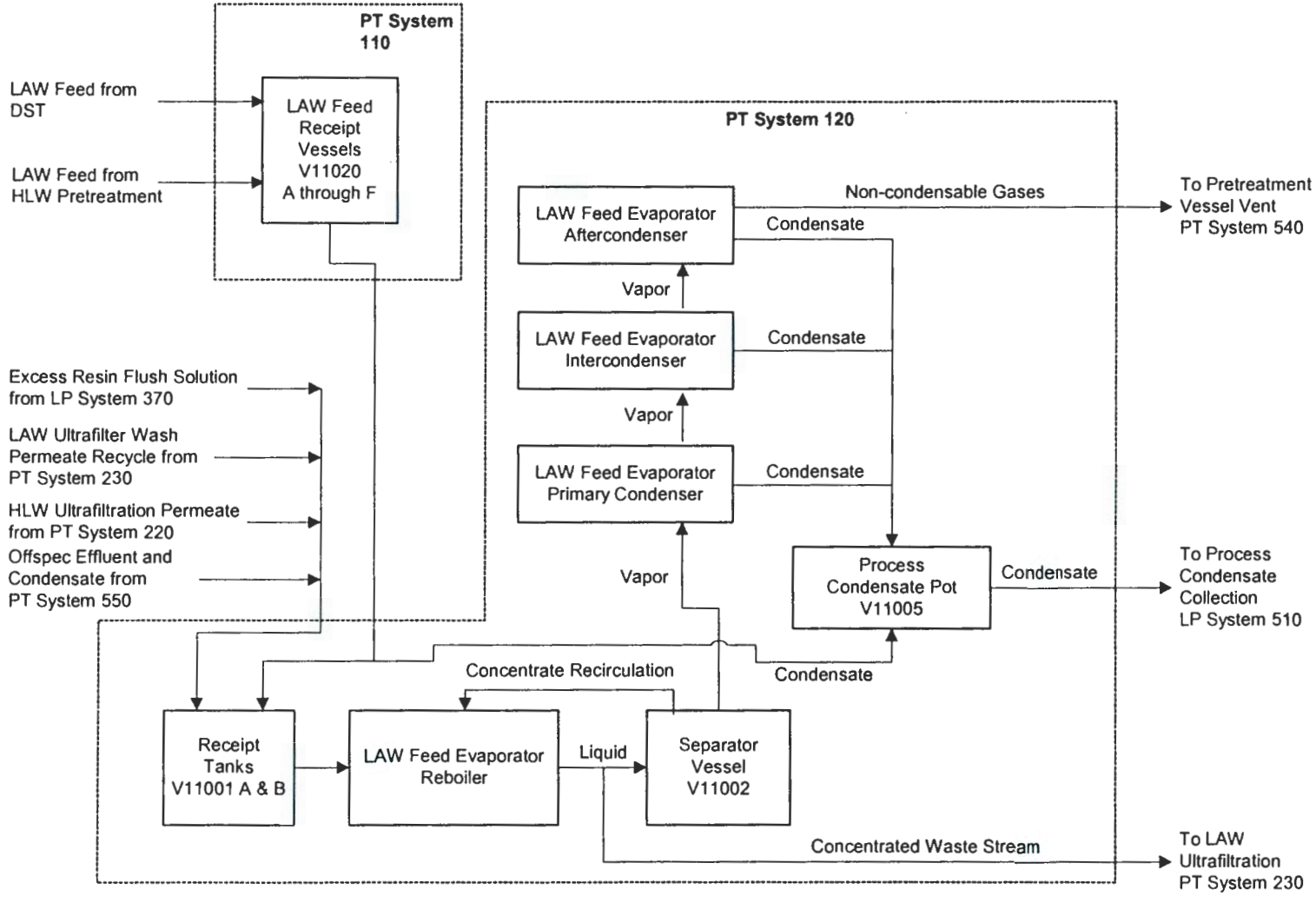

0025 v03 vsd

Figure 4-4. Simplified Process Flow Diagram of the HLW Feed Receipt System (PT System 210)

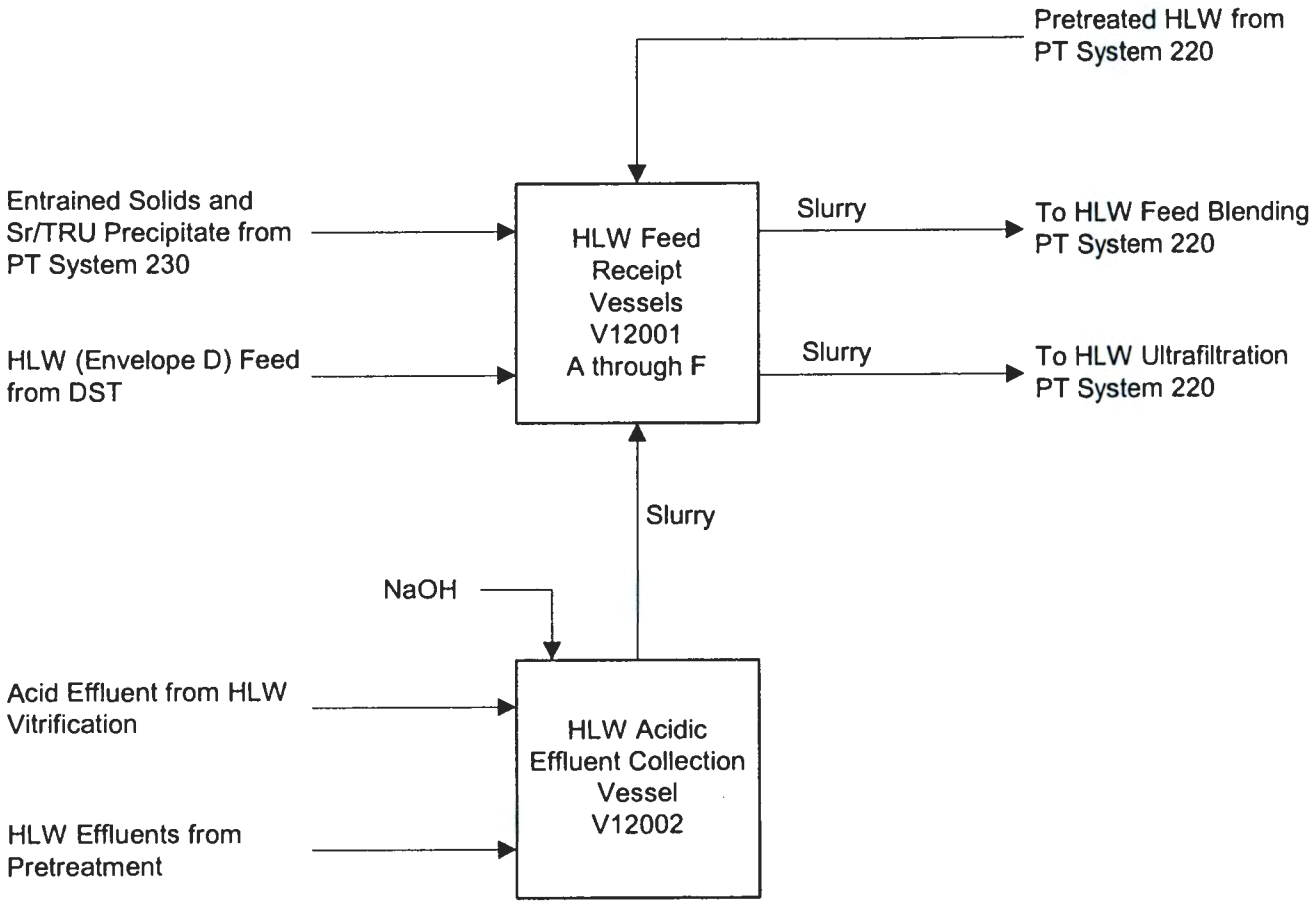

0023 v02.vsd

Figure 4-5. Simplified Process Flow Diagram of the HLW Pretreatment System (PT System 220)

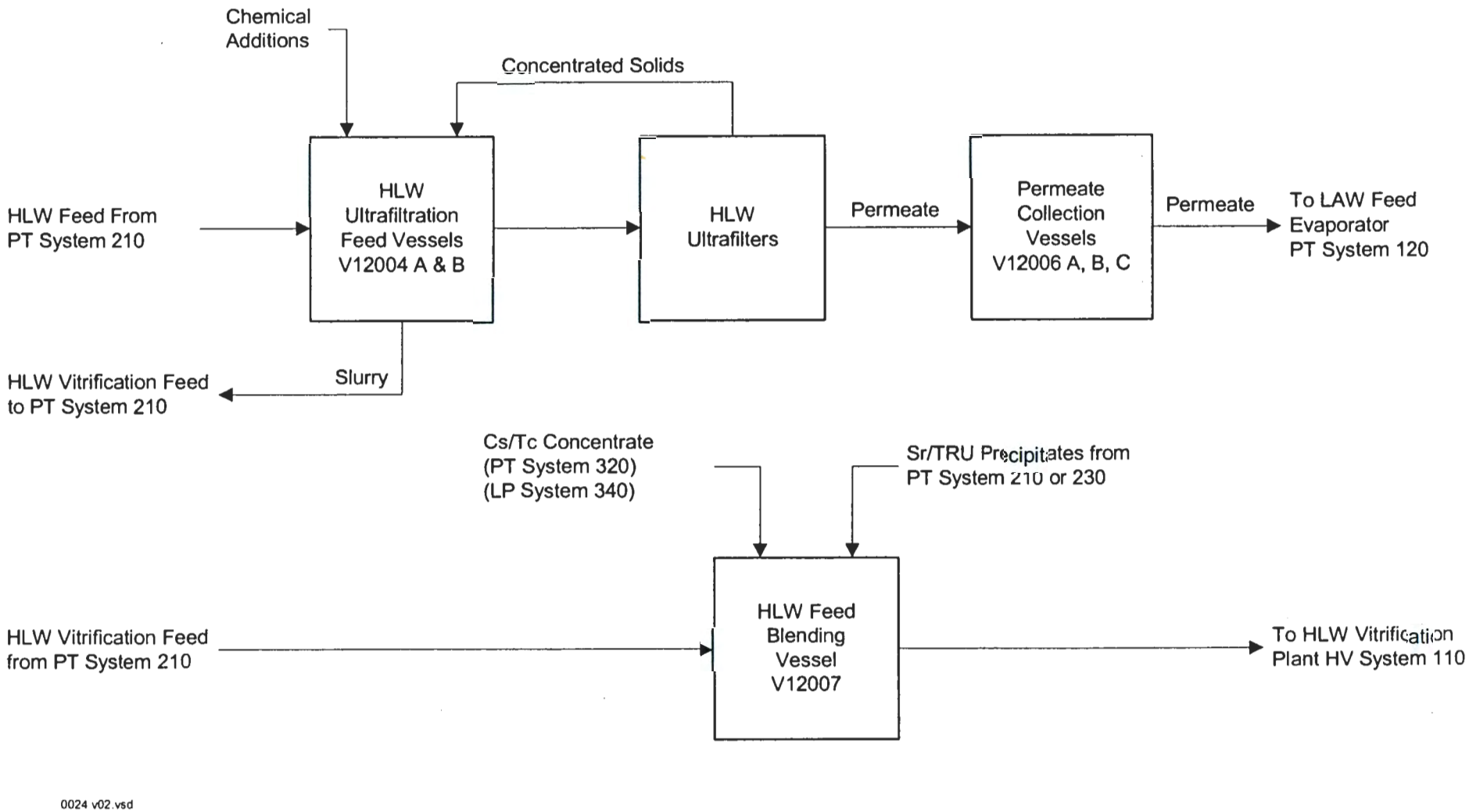

Figure 4-6. Simplified Process Flow Diagram of the LAW Ultrafiltration System (PT System 230)

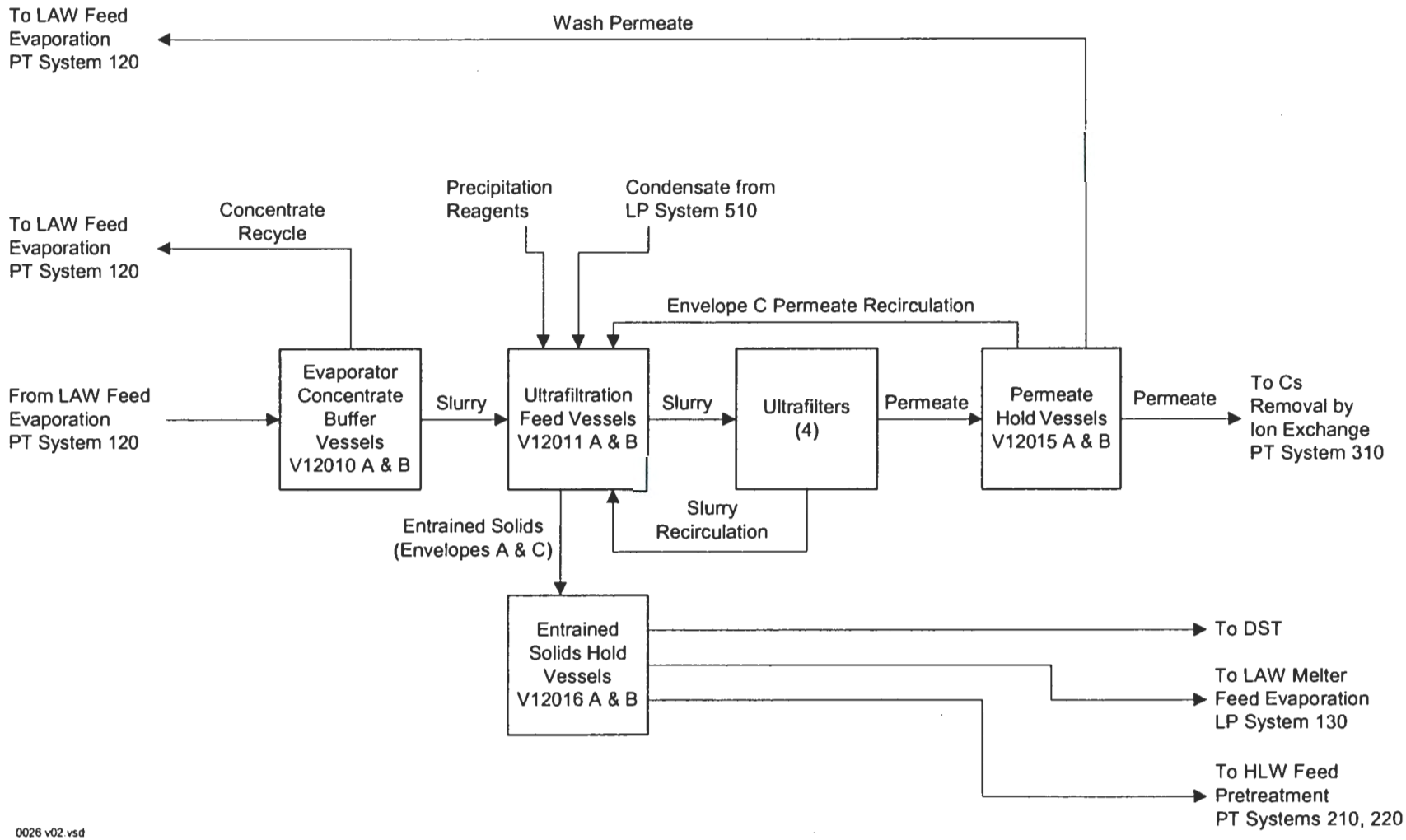

Figure 4-7. Simplified Process Flow Diagram of Cesium Removal by Ion Exchange (PT System 310)

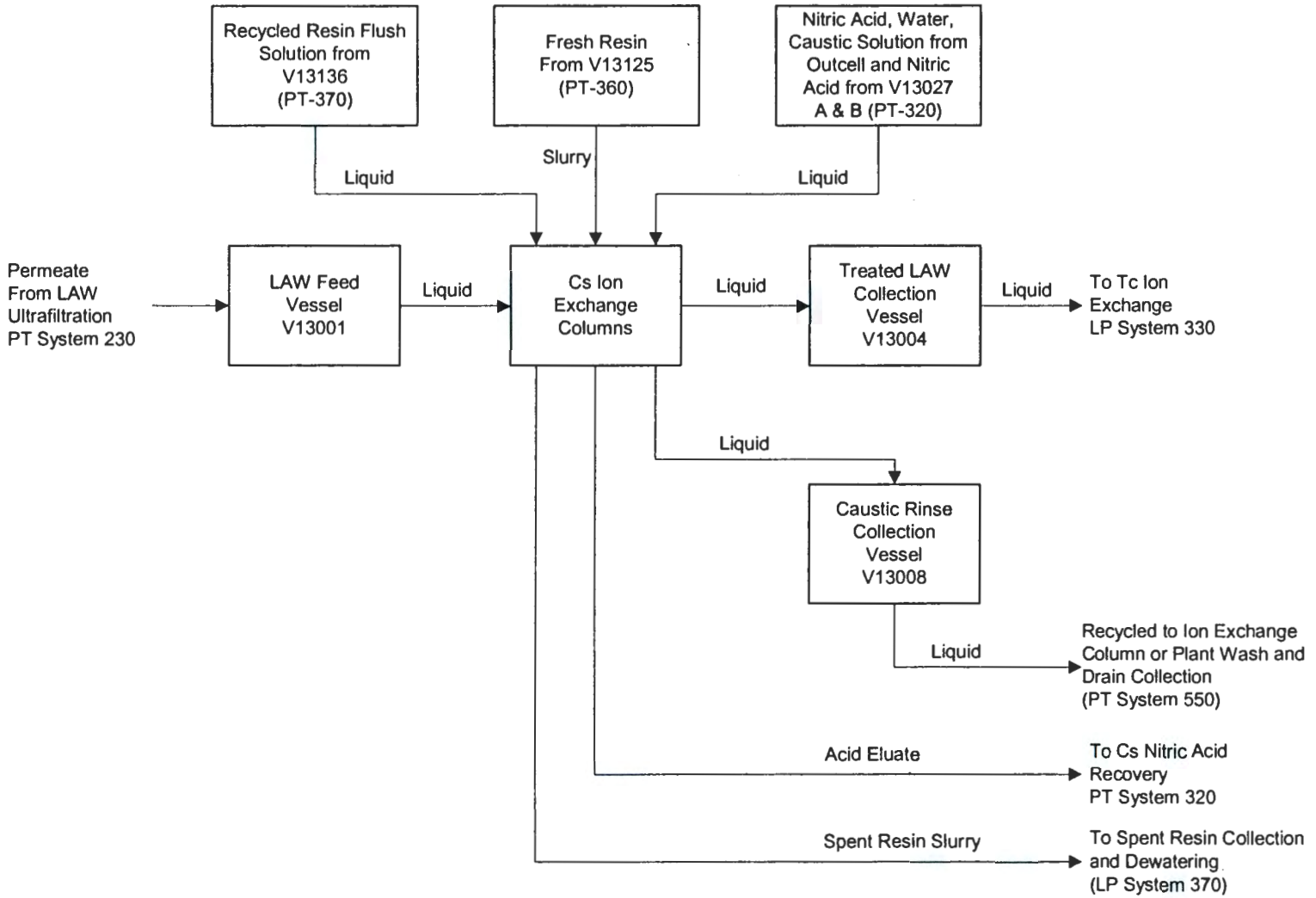

0027 v02.vsd

Figure 4-8. Simplified Process Flow Diagram of the Cesium Nitric Acid Recovery System (PT System 320)

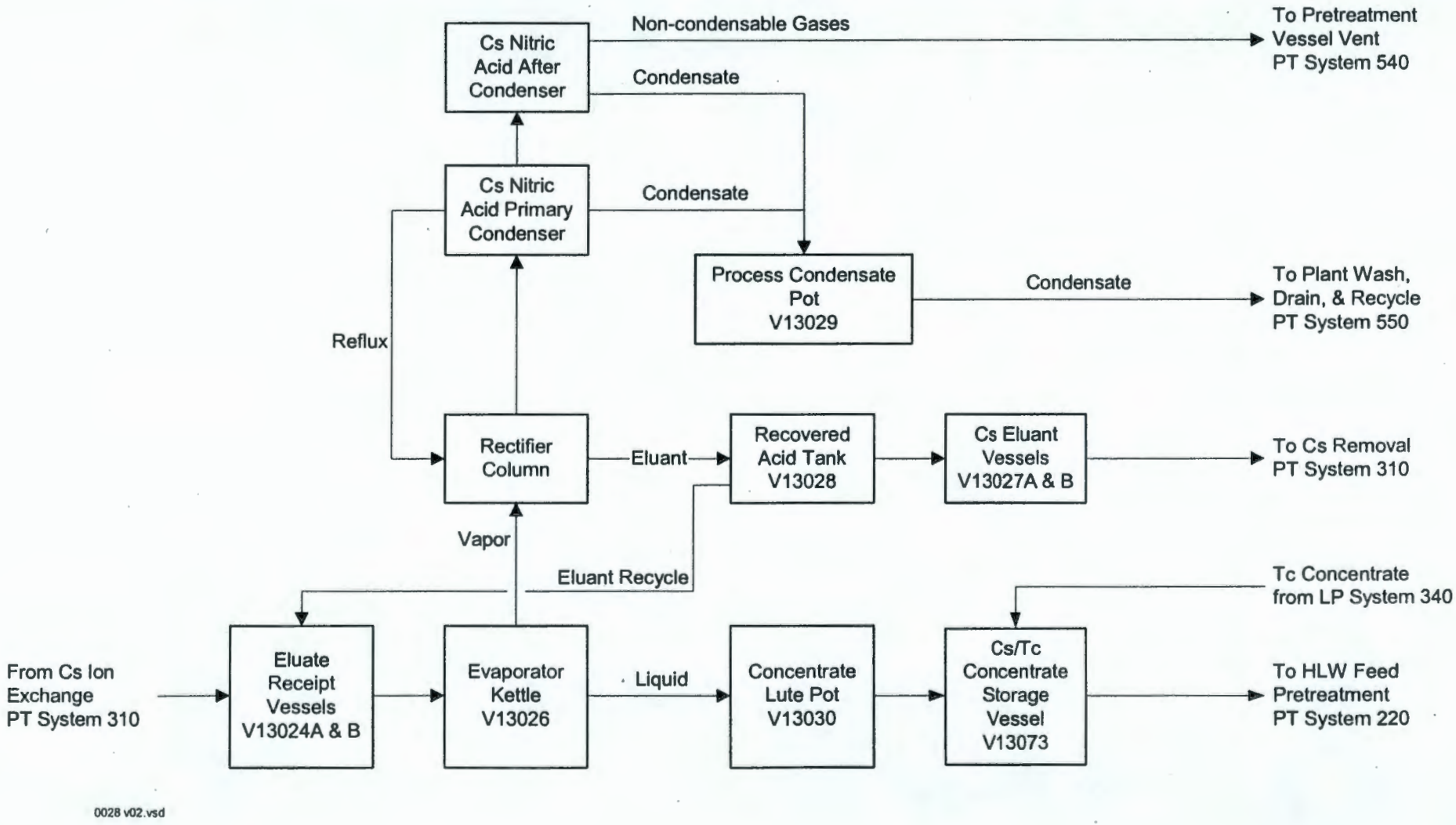

Figure 4-9. Simplified Process Flow Diagram of Cesium Fresh Resin Addition System (PT System 360)

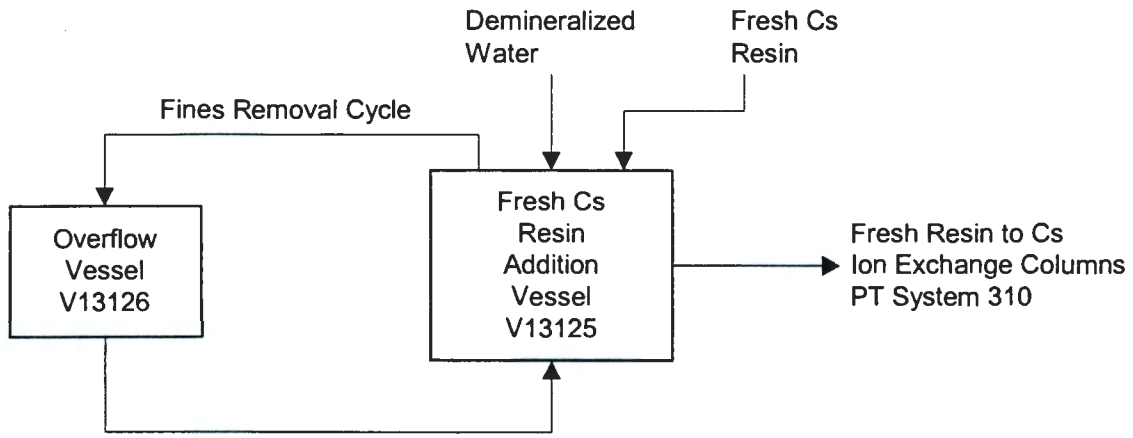

0138 v02.vsd

Figure 4-10. Simplified Process Flow Diagram of Pretreatment Plant Vessel Vent System (PT System 540)

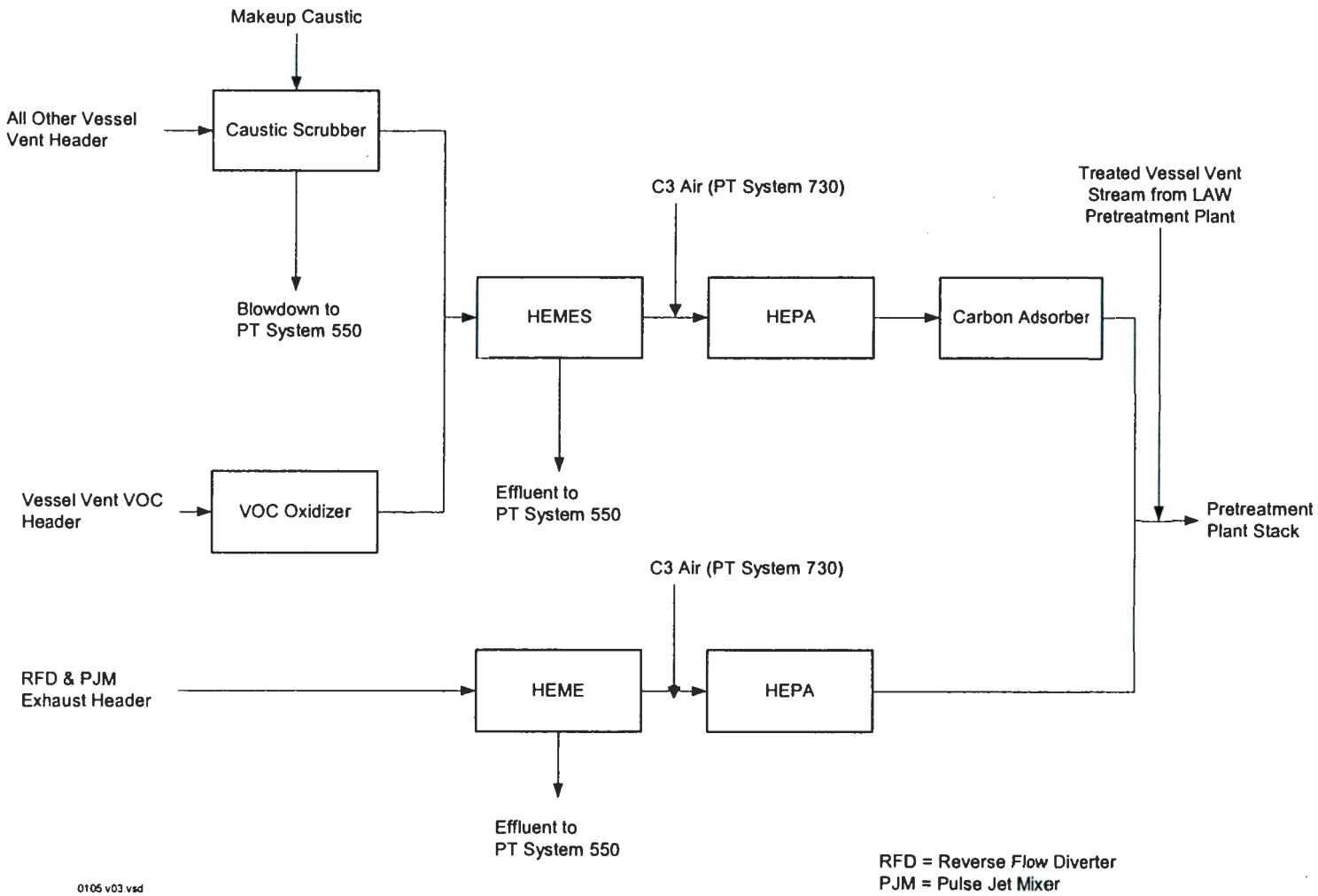

Figure 4-11. Simplified Process Flow Diagram of Pretreatment Plant Wash and Effluent Collection System (PT System 550)

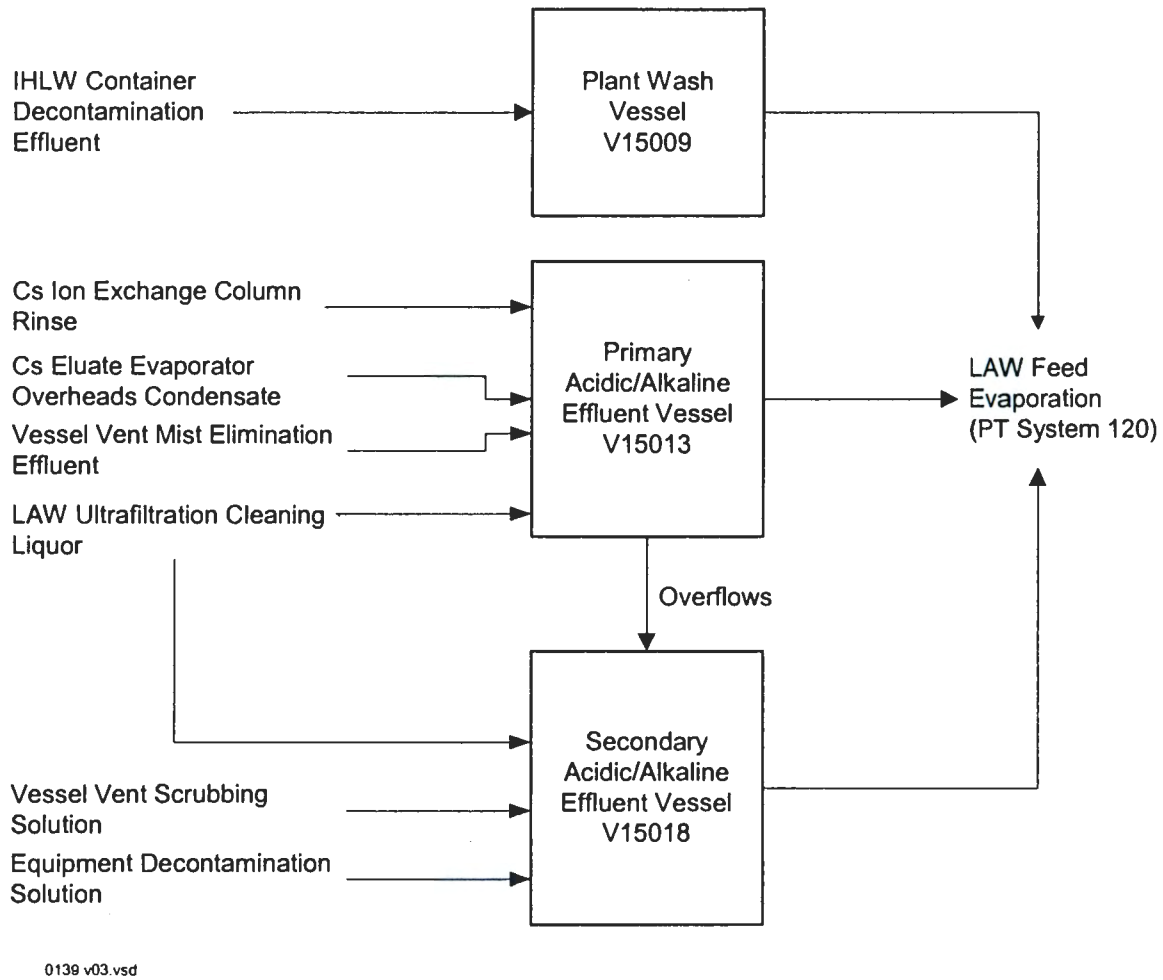

Figure 4-12. Simplified Process Flow Diagram for LAW Pretreatment Plant

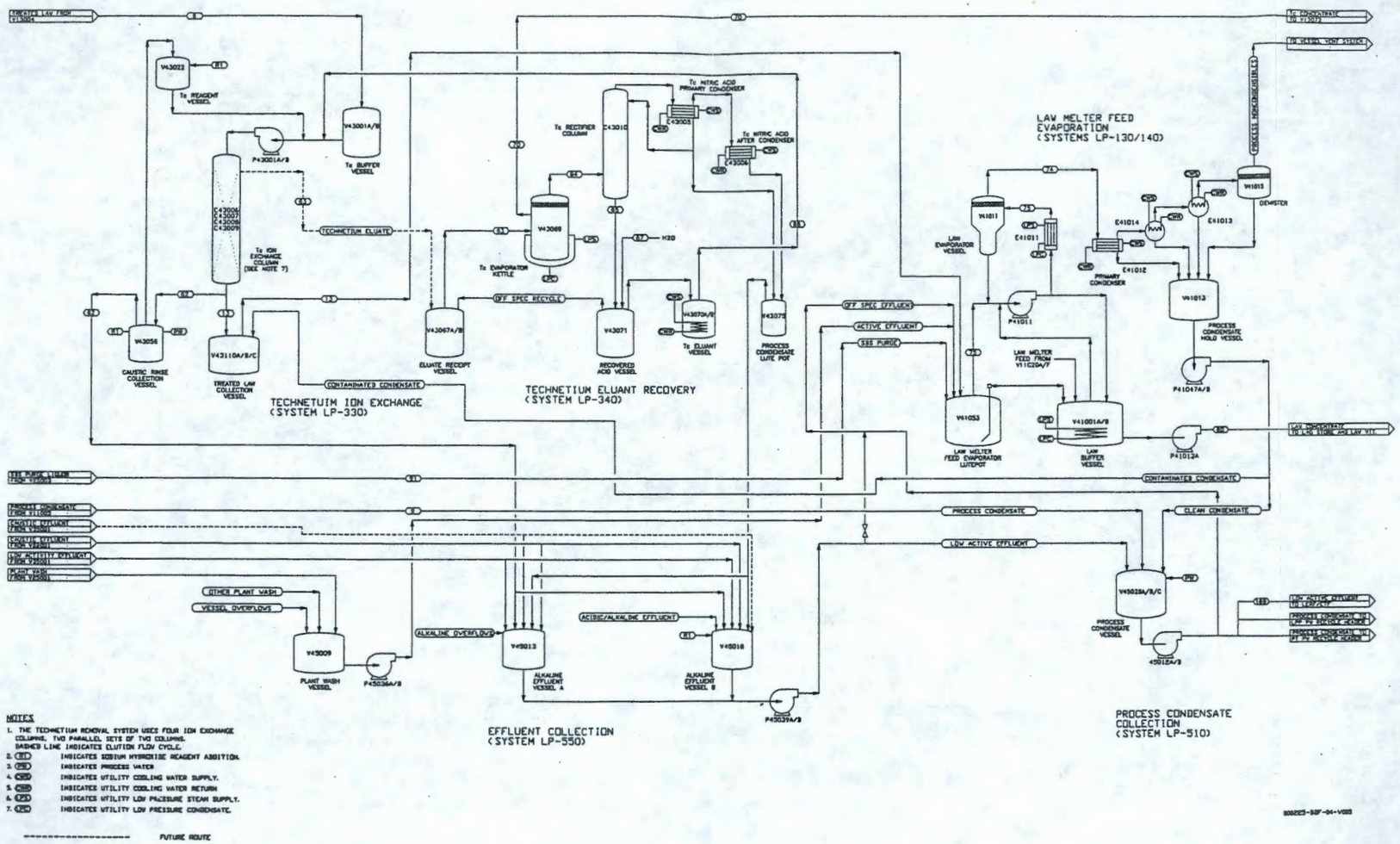

Figure 4-13. Simplified Process Flow Diagram of the Technetium Removal Using Ion Exchange System (LP System 330)

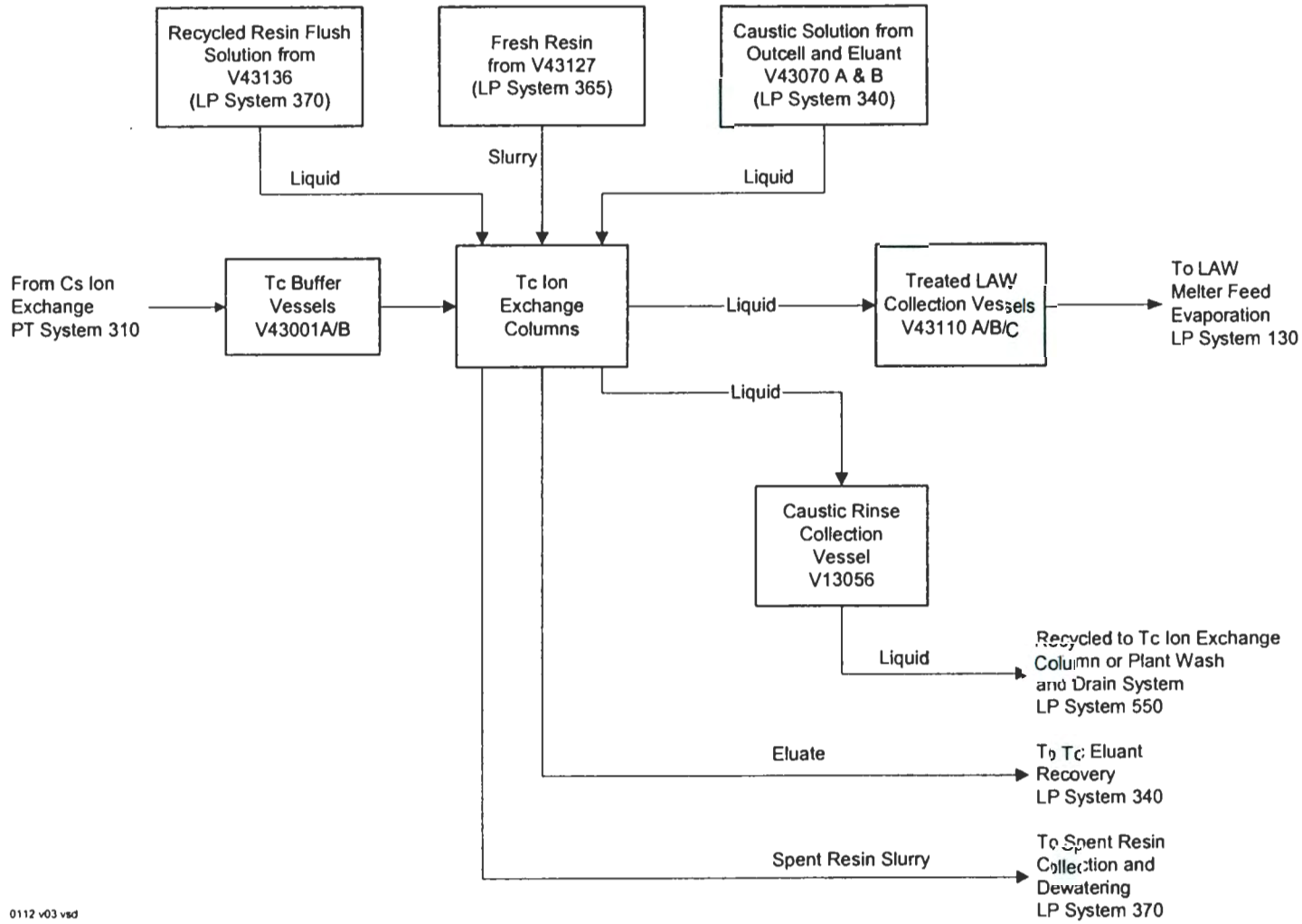

Figure 4-14. Simplified Process Flow Diagram of the Technetium Eluant Recovery System (LP System 340)

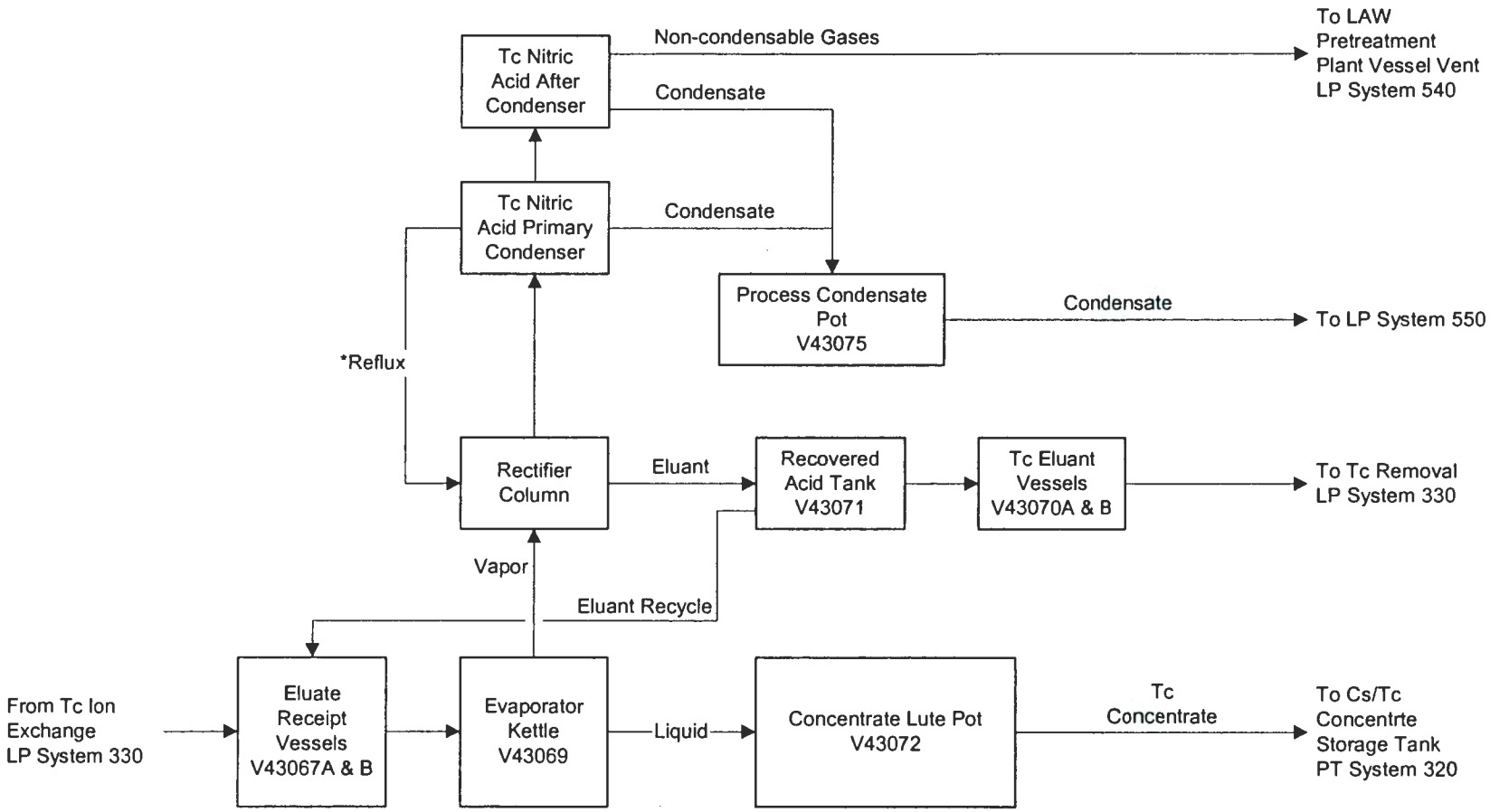

* The rectifier column would be replaced if acid were used as the elution fluid instead of water.

0111 v03.vsd

Figure 4-15. Simplified Process Flow Diagram of Technetium Fresh Resin Addition System (LP System 365)

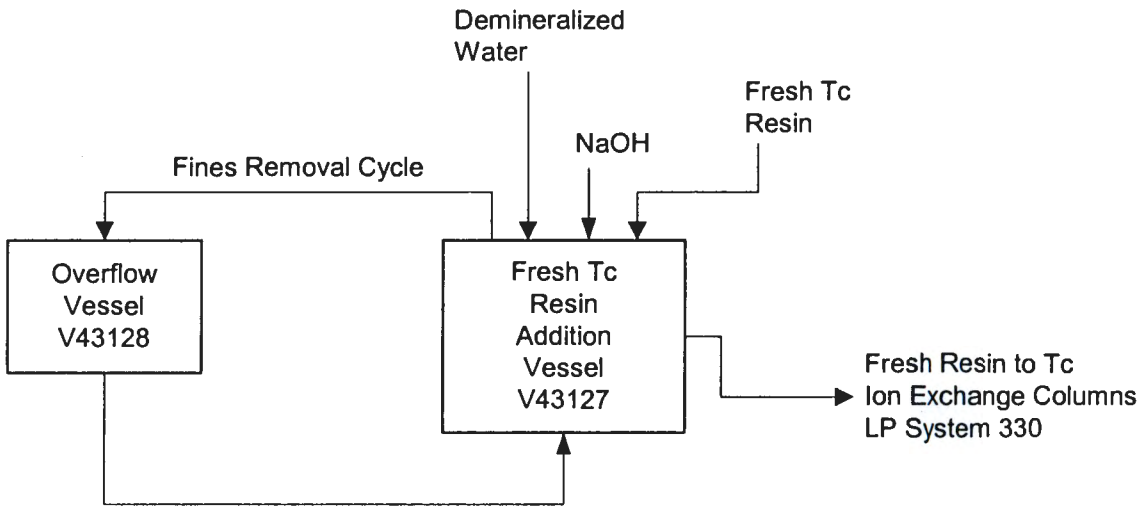

0106 v02.vsd

Figure 4-16. Simplified Process Flow Diagram of Spent Resin Collection and Dewatering System (LP System 370)

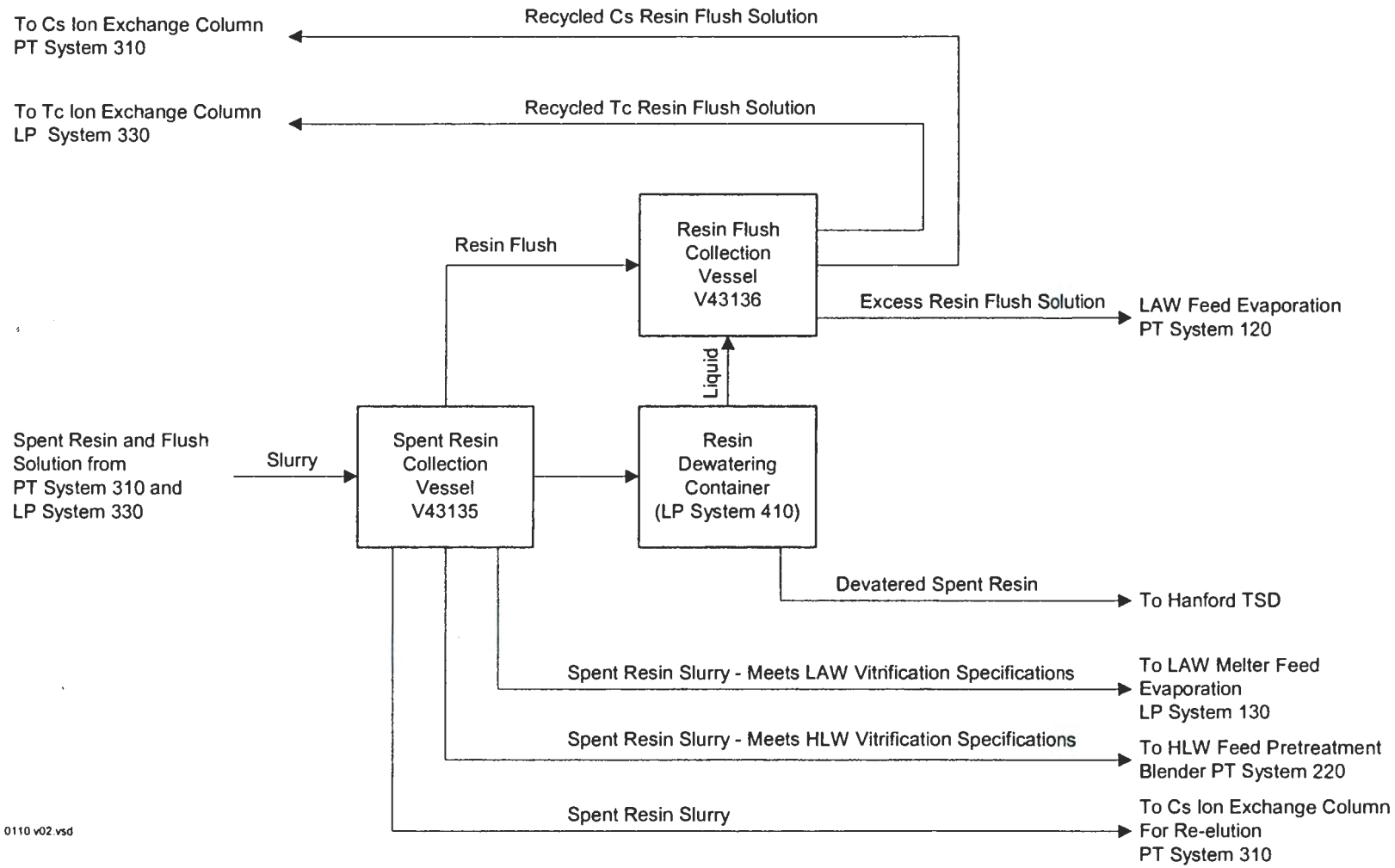

Figure 4-17. Simplified Process Flow Diagram of the LAW Melter Feed Evaporation System (LP System 130)

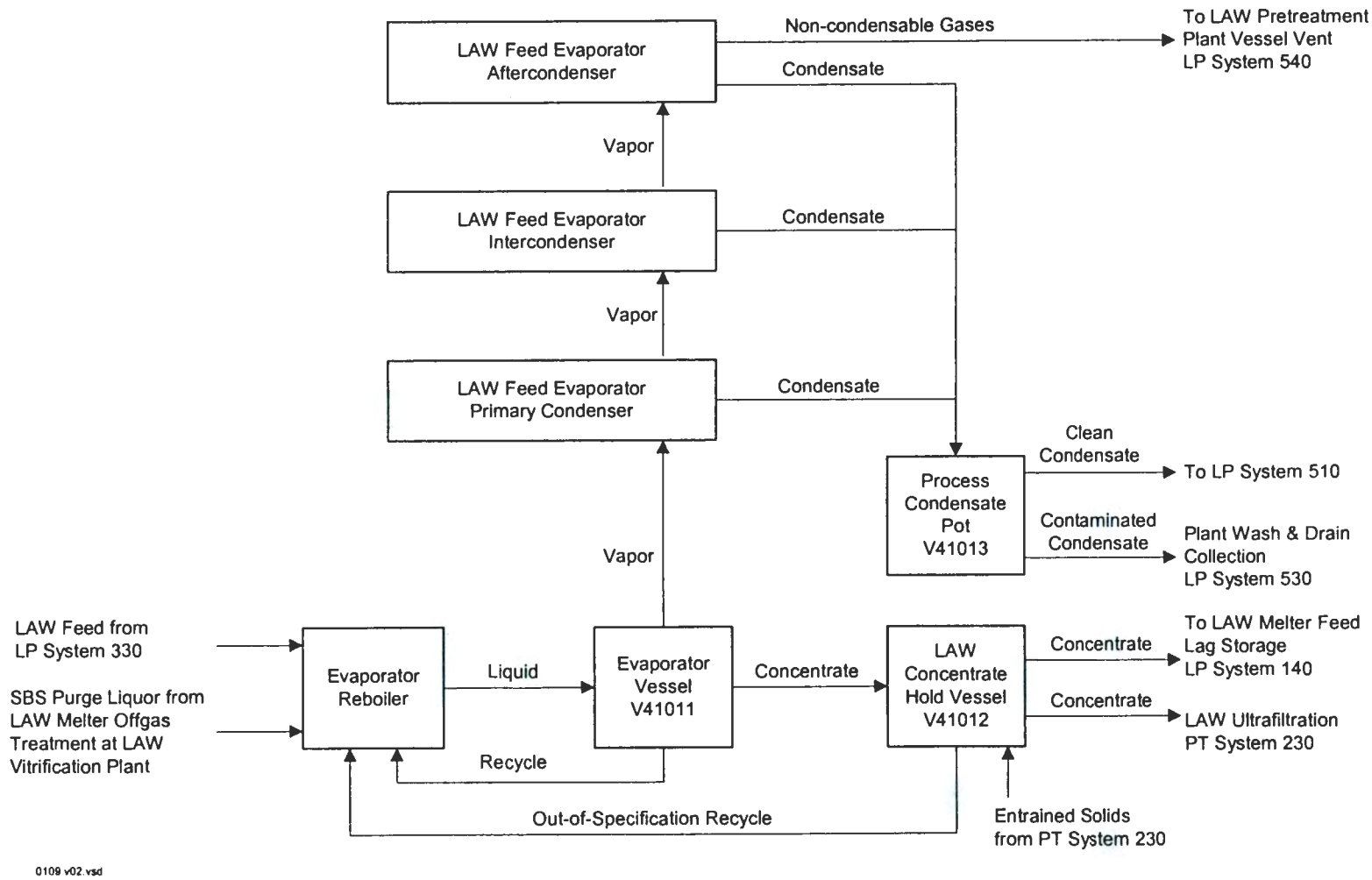

Figure 4-18. Simplified Process Flow Diagram of the LAW Melter Feed Lag Storage System (LP System 140)

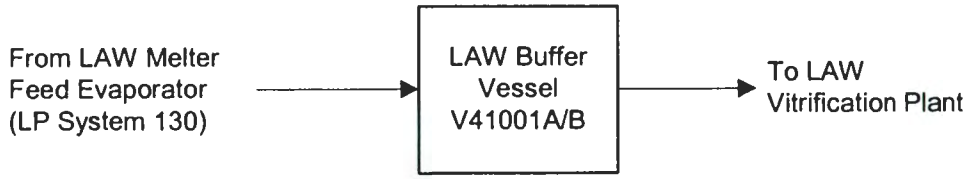

0135 v02.vsd

Figure 4-19. Simplified Process Flow Diagram of LAW Pretreatment Plant Vessel Vent System (LP System 540)

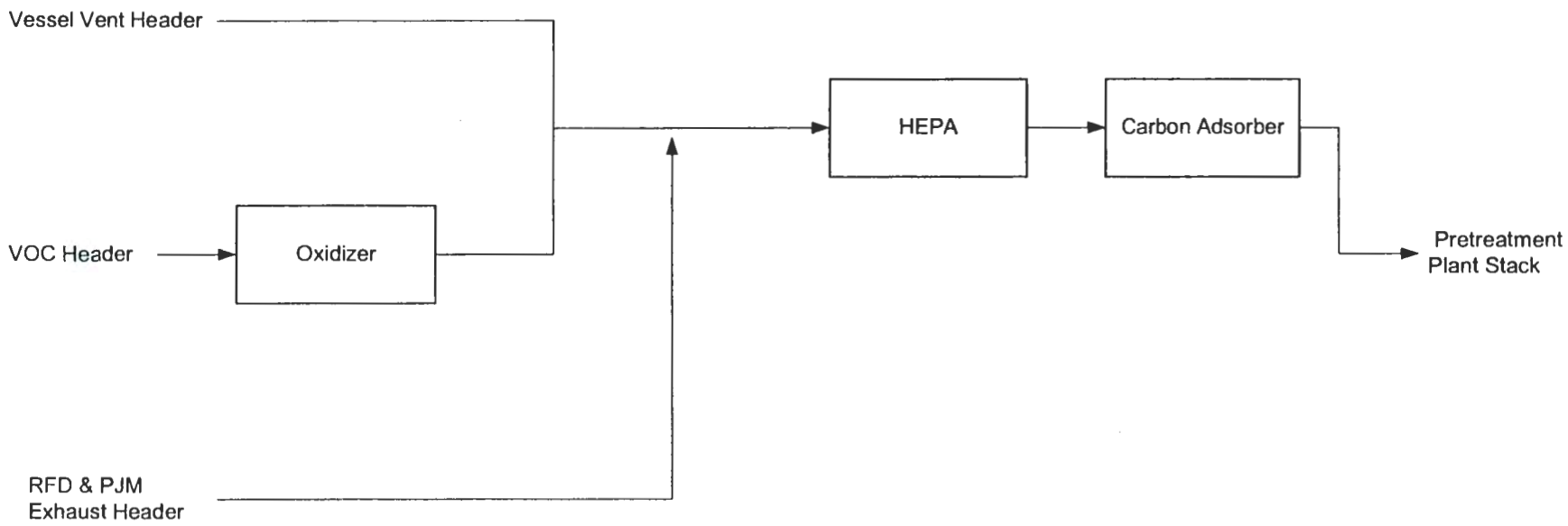

0108 v02.vsd

Figure 4-20. Simplified Process Flow Diagram of LAW Pretreatment Plant Effluent Collection Systems (LP Systems 510, 550)

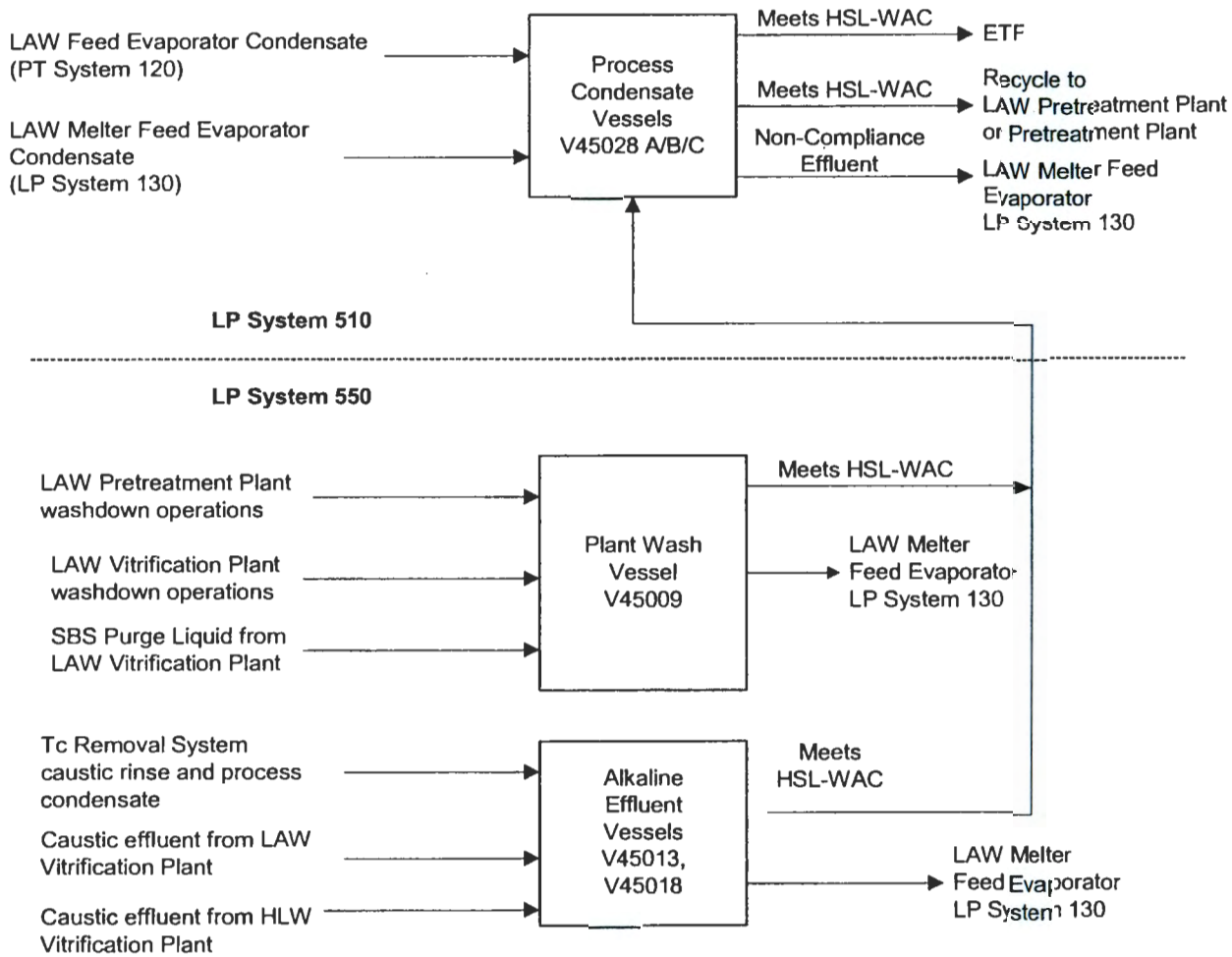

Figure 4-21. Simplified Process Flow Diagram for LAW Vitrification Plant

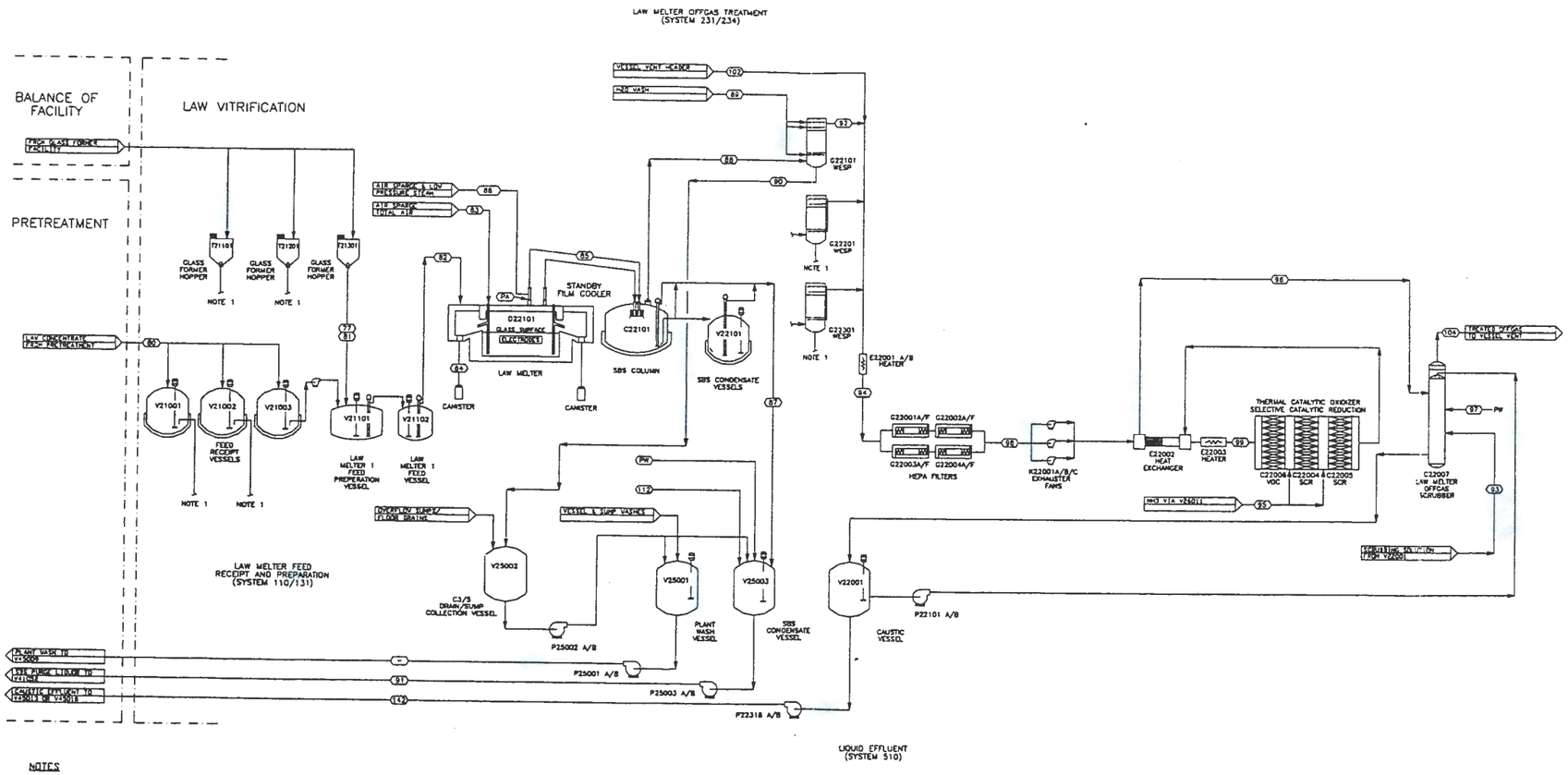

NOTES

1. FOR THE ENHANCED THROUGHPUT OF 60 TONNE PER DAY LAW GLASS, THE FLOWSHEET MODEL INCREASES THROUGHPUT 2X. FOR THIS FLOW DIAGRAM, ONE MELTER SYSTEM IS SHOWN BUT ASSUMES TWO OR MORE LAW MELTER SYSTEMS OF IDENTICAL CAPACITY, EACH HAVING SEPARATE FEED TANKS, SBS COLUMNS, AND WESPS. THE LAW MELTER OFFGASES COMBINE AFTER EXITING THE WESPS.
2. (PA) INDICATES PROCESS AIR.
3. (PW) INDICATES PROCESS WATER.

080225-IBF-02-V003

Figure 4-22. Simplified Process Flow Diagram of LAW Melter Feed Systems (LV Systems 110, 131, 132, 133, 211, 212, 213)

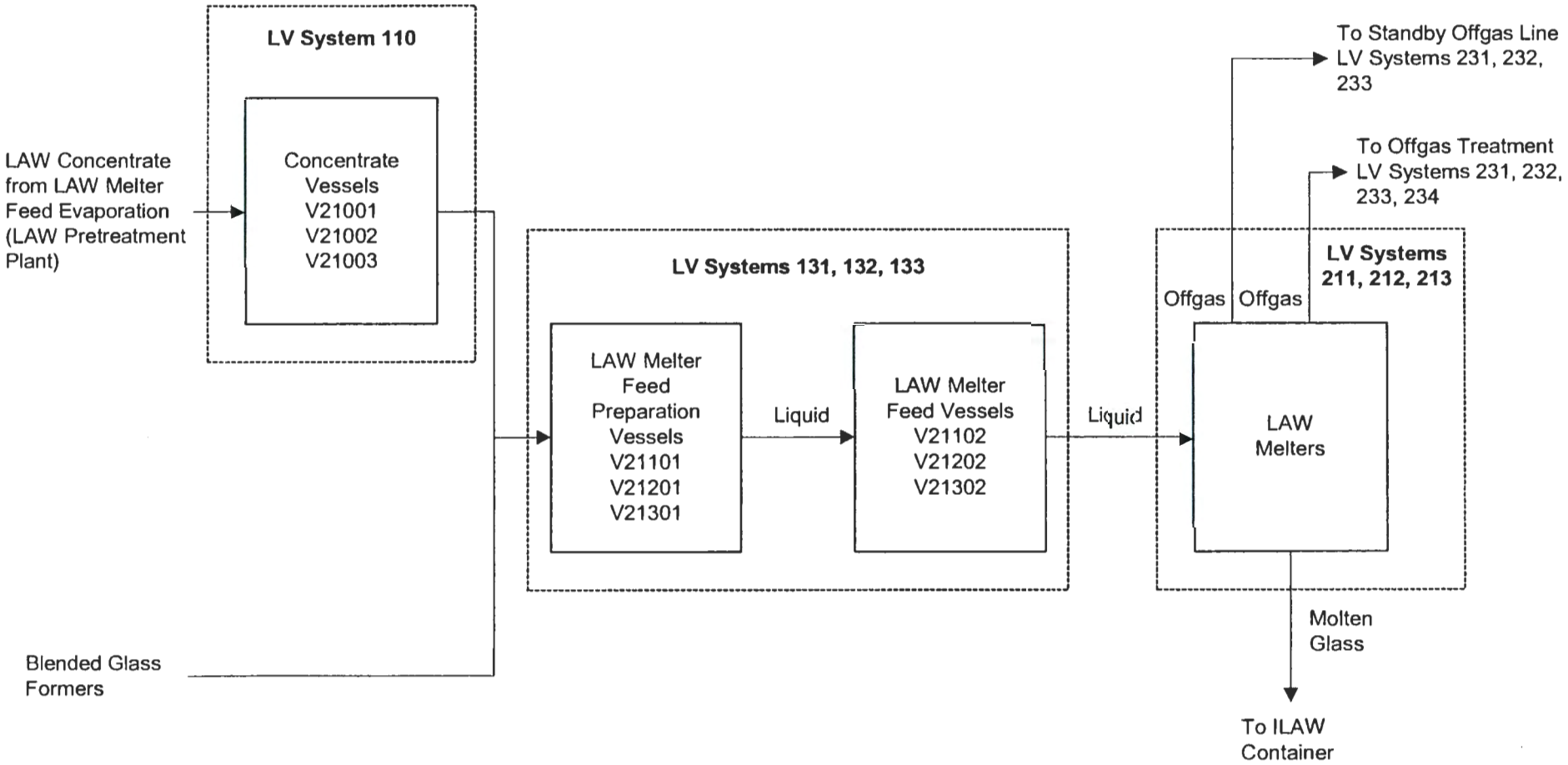

0035 v02.vsd

Figure 4-23. Simplified Process Flow Diagram of the LAW Melter Primary Offgas Systems (LV Systems 231, 232, 233)

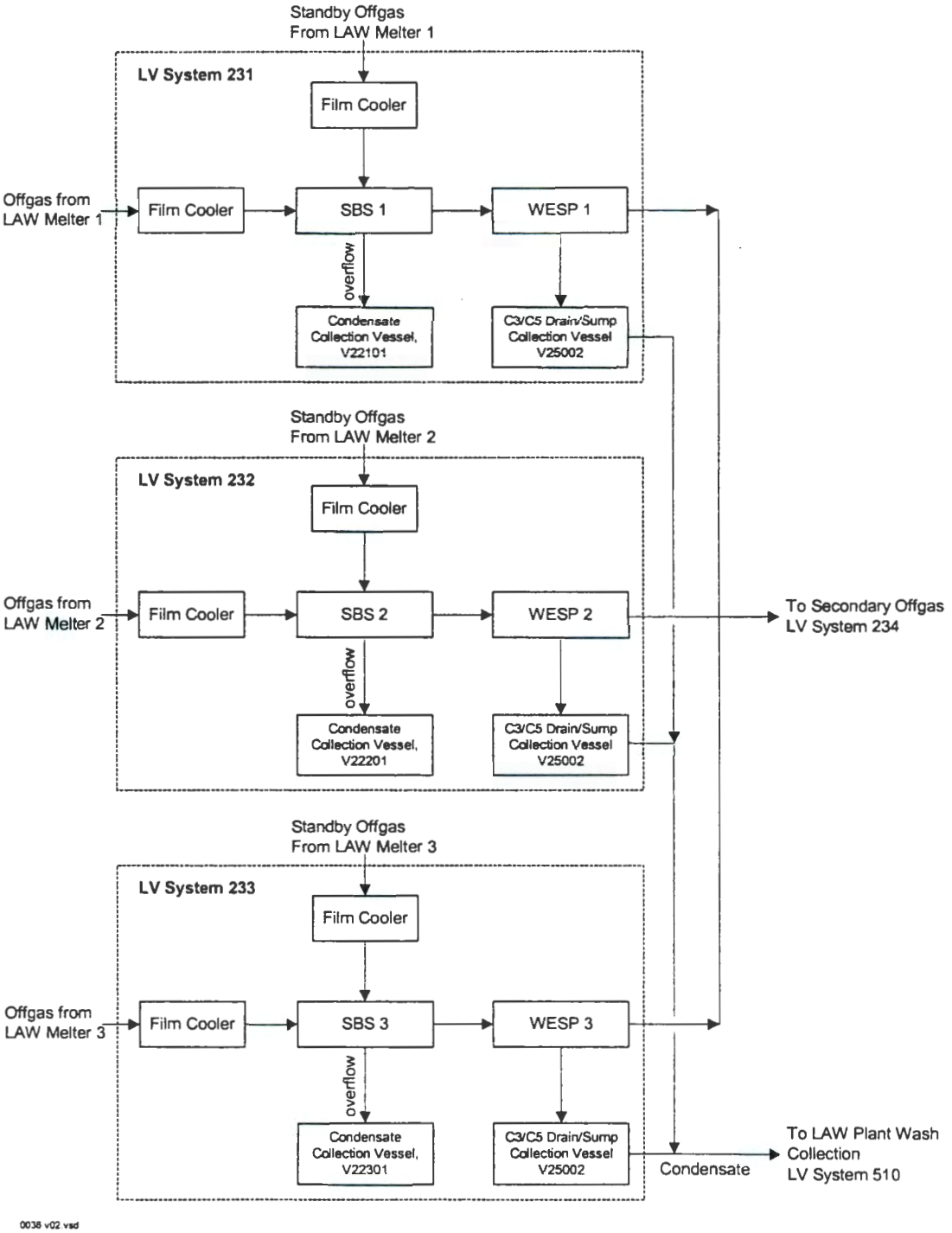

Figure 4-24. Simplified Process Flow Diagram of the LAW Melter Secondary Offgas System (LV System 234)

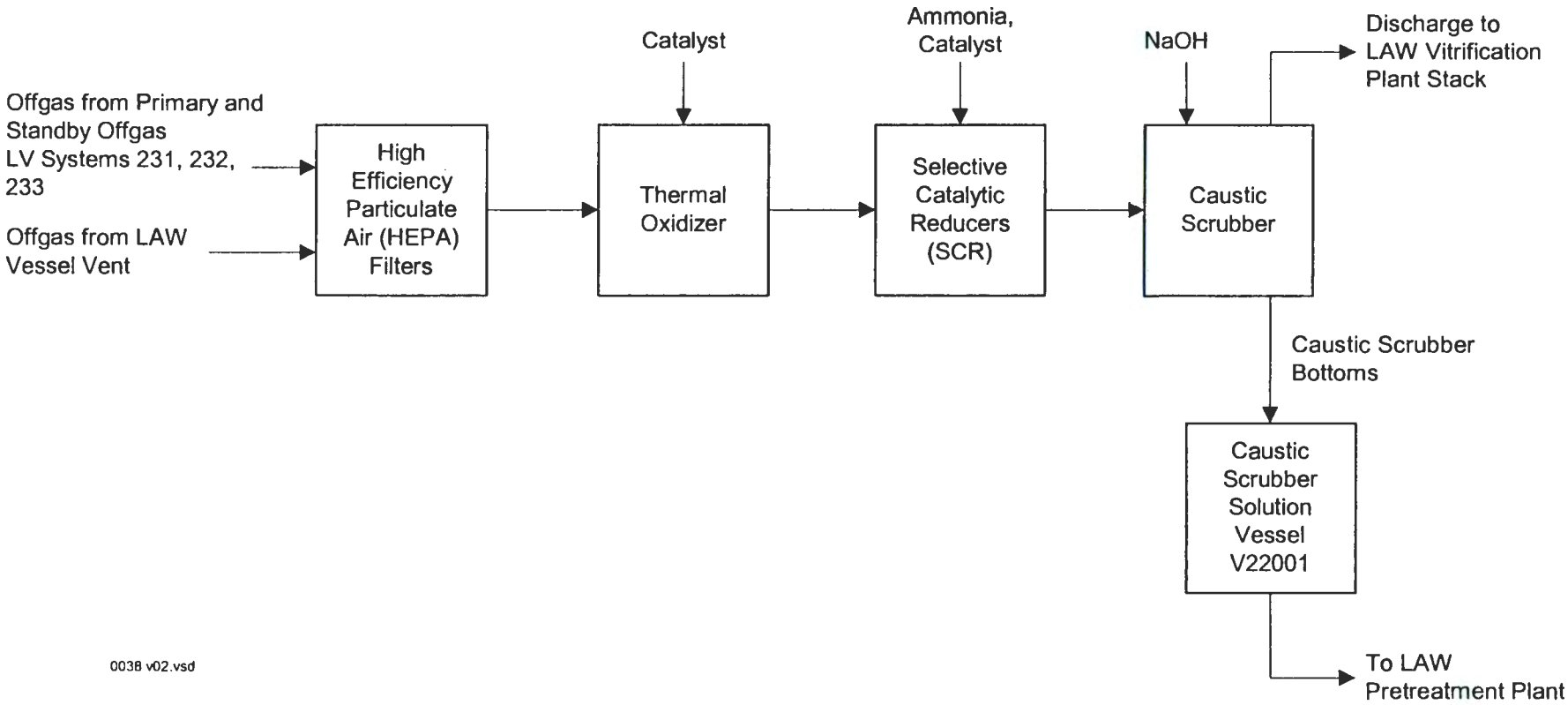

Figure 4-25. Simplified Process Flow Diagram of LAW Vitrification Plant Liquid Effluent System (LV System 510)

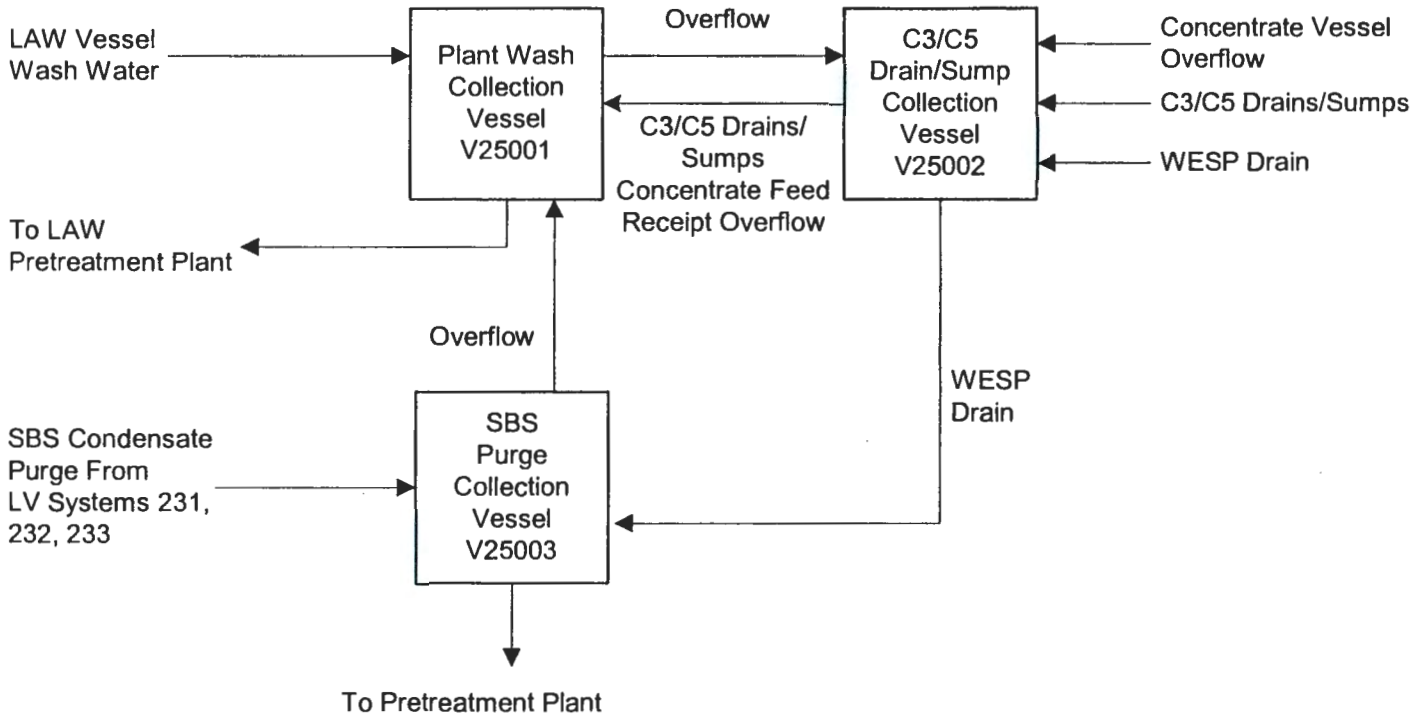

Figure 4-26. Simplified Process Flow Diagram for HLW Vitrification Plant

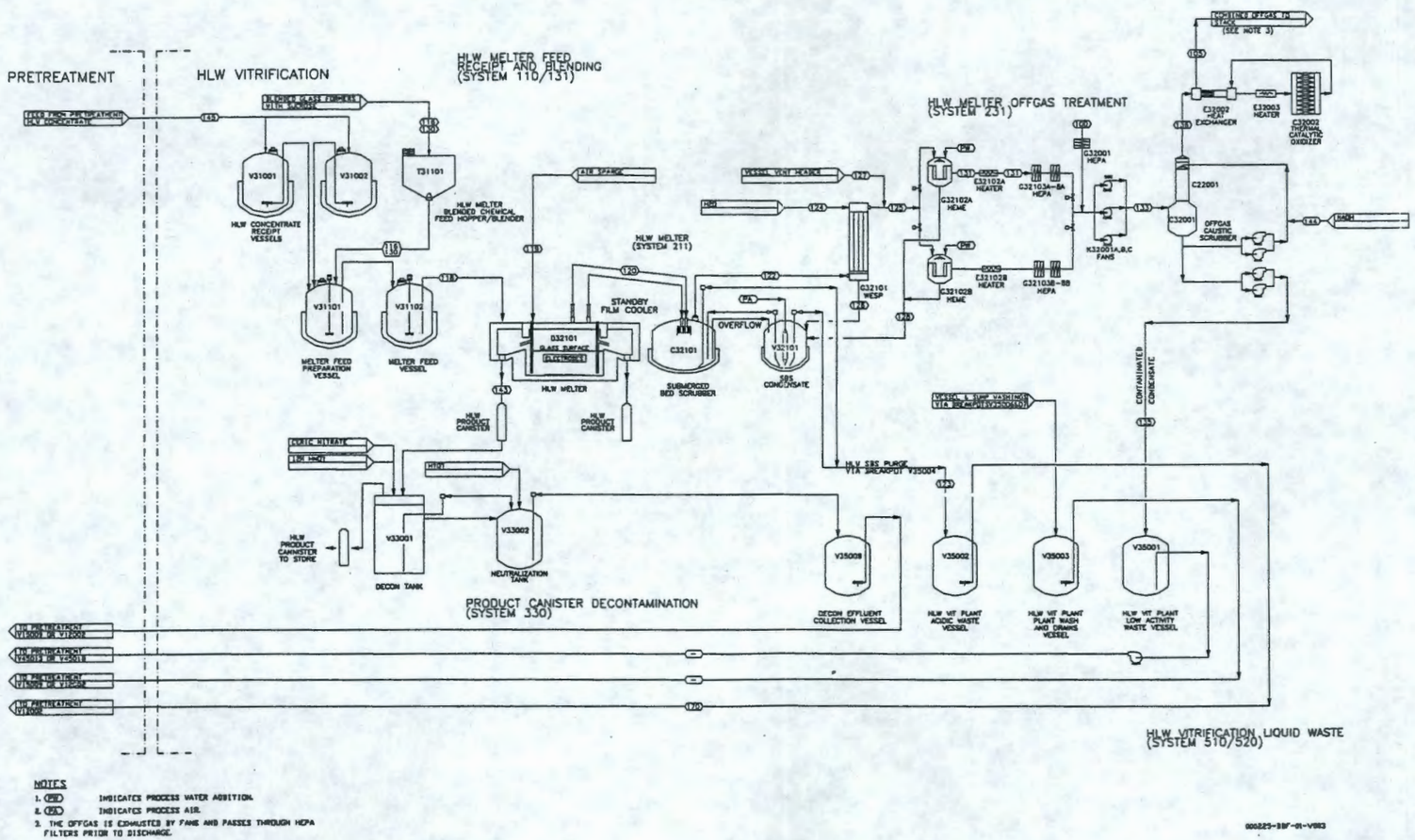

Figure 4-27. Simplified Process Flow Diagram of the HLW Melter Feed Systems (HV Systems 110, 131) and HLW Melter (HV System 211)

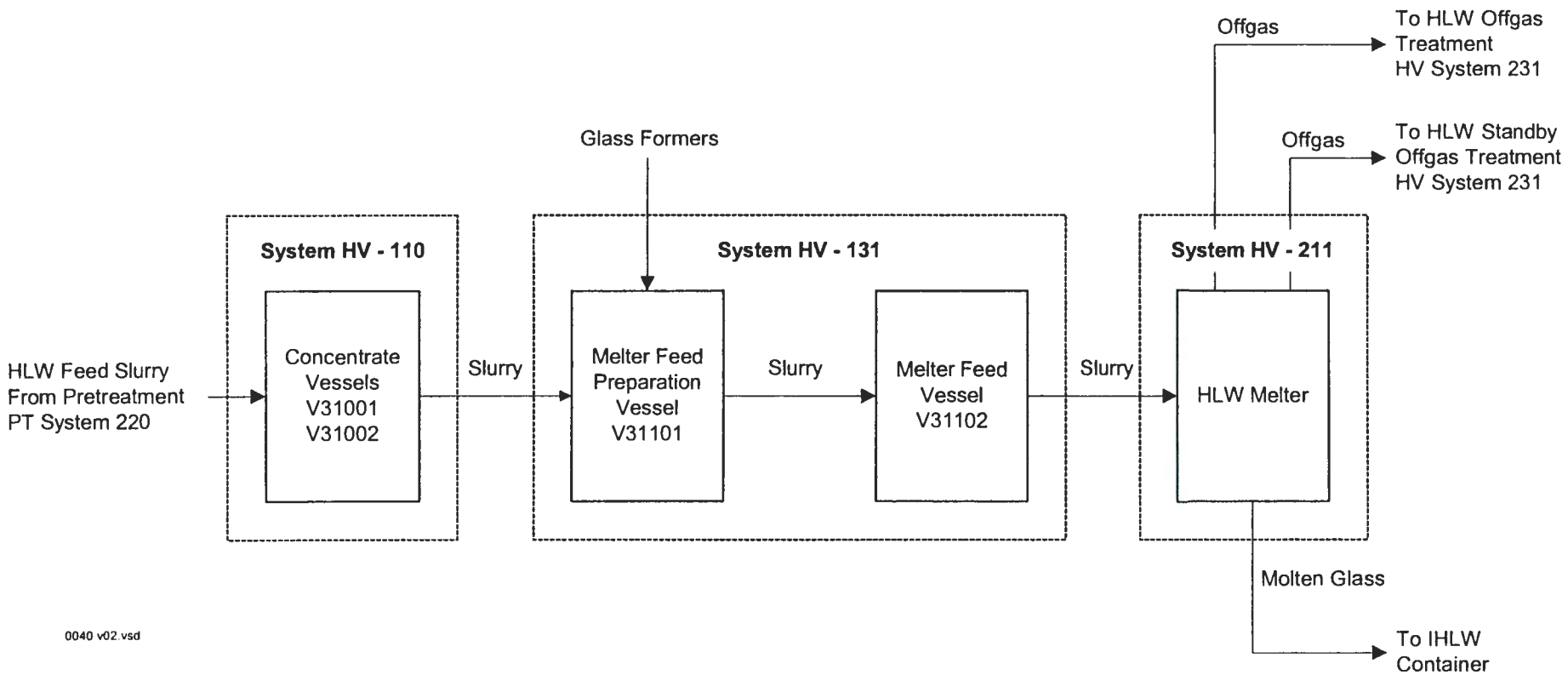

Figure 4-28. Simplified Process Flow Diagram of the HLW Melter Offgas Treatment - Primary (HV System 231)

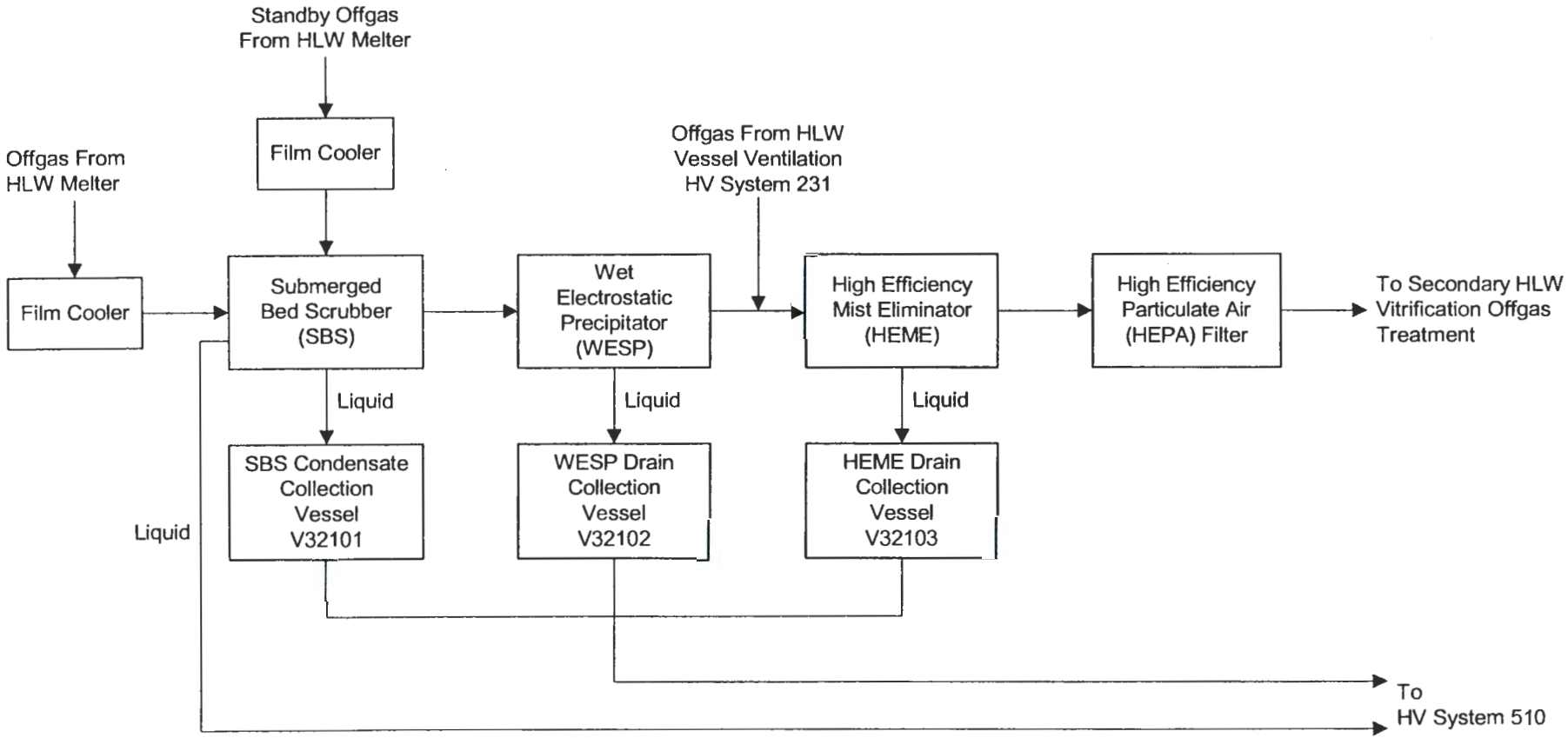

0041 v03.vsd

Figure 4-29. Simplified Process Flow Diagram of the HLW Melter Offgas Treatment - Secondary (HV System 231)

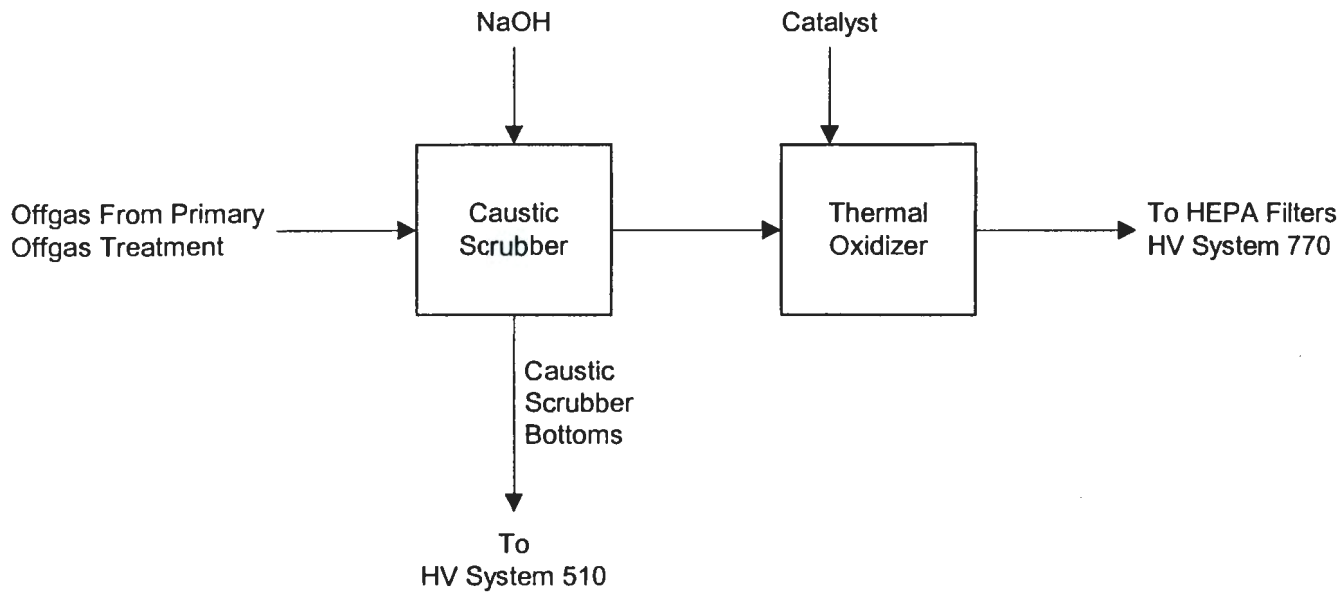

0042 v03.vsd

Figure 4-30. Simplified Process Flow Diagram of the HLW Vitrification Plant Liquid Effluent System
(HV System 510)

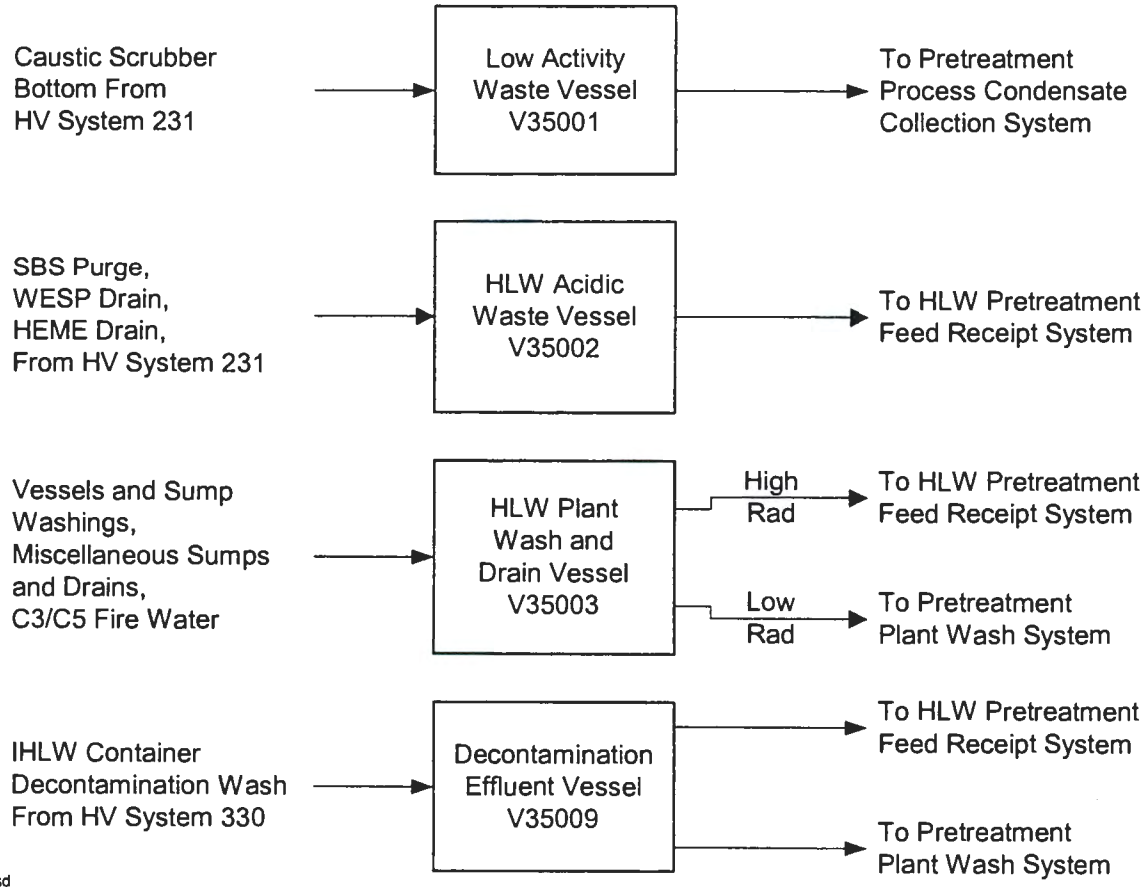

0043 v01.vsd

Figure 4-31. Schematic of an Example IHLW Container and Label

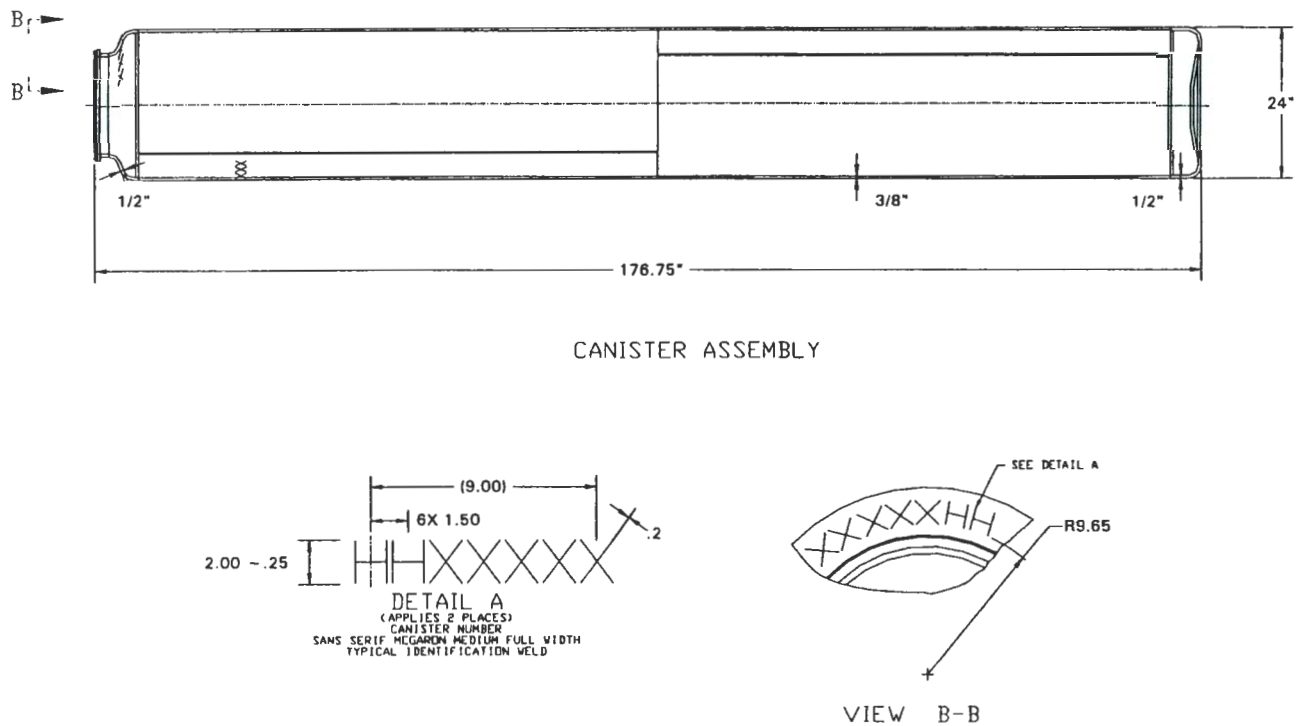

Figure 4-32. Schematic of an Example ILAW Container and Label

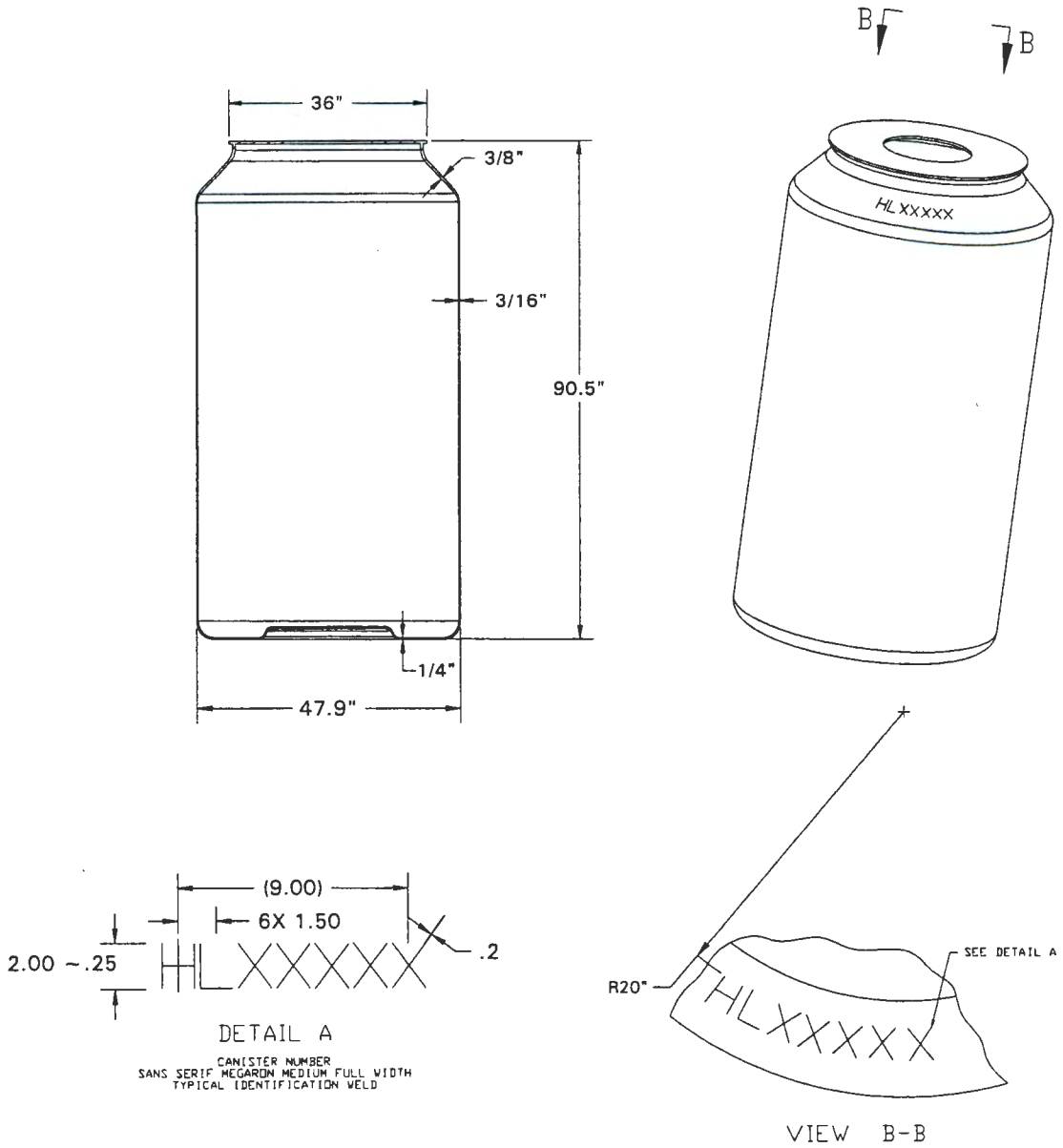

Figure 4-33. LAW Vitrification Plant Container Storage Area at 21 foot elevation

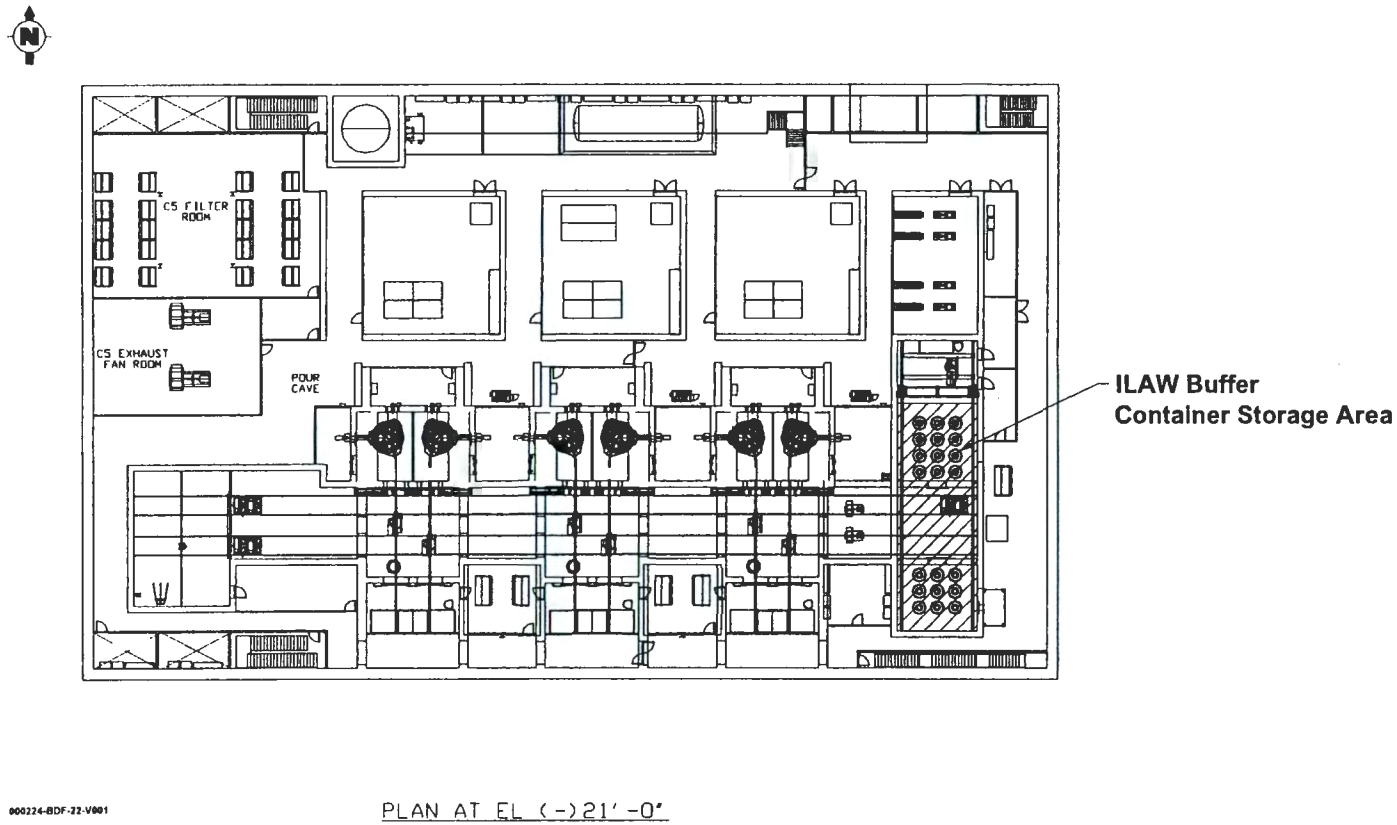

000224-BDF-22-V001

Figure 4-34. LAW Vitrification Plant Container Storage Areas at 3 foot Elevation

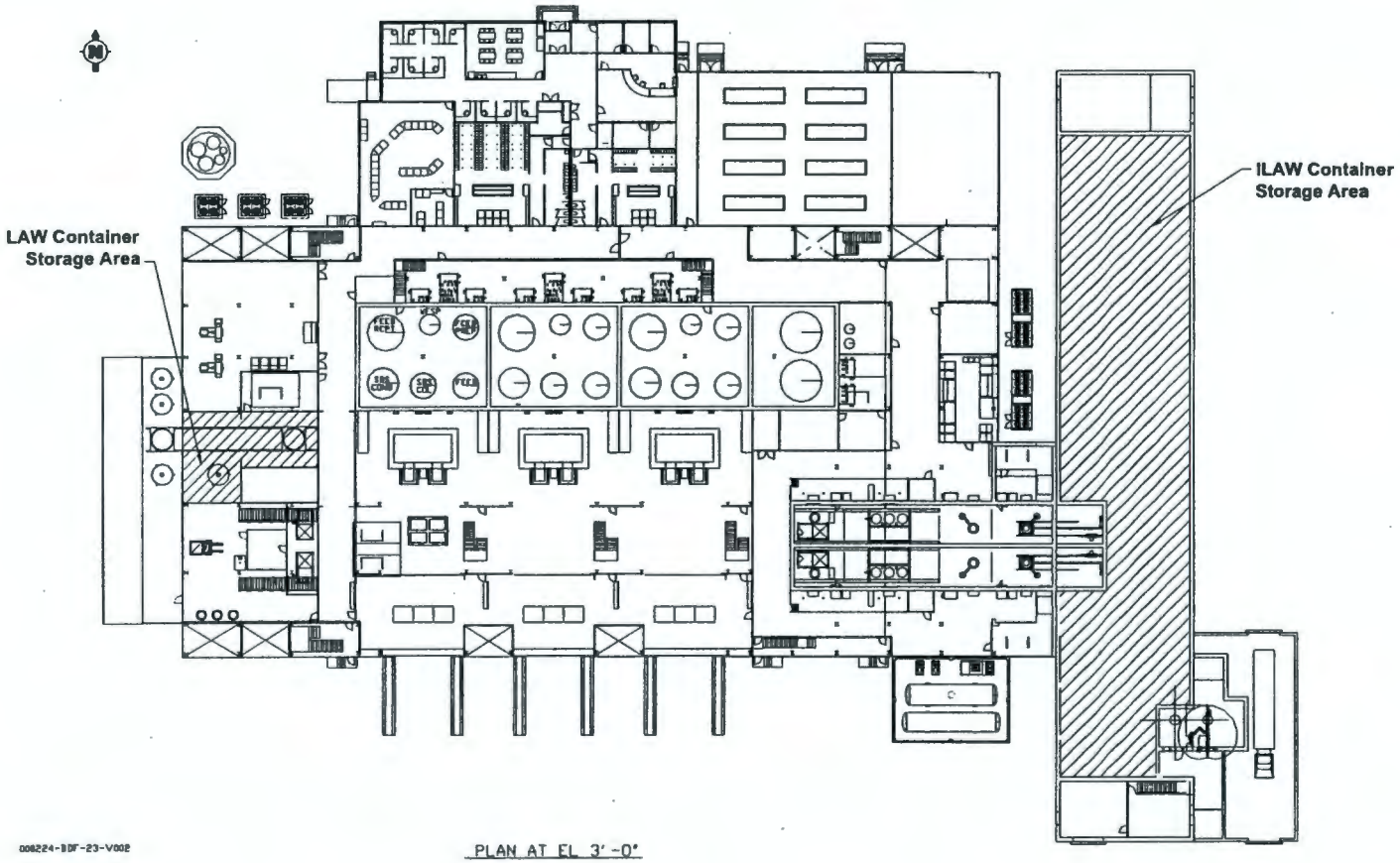

Figure 4-35. HLW Vitrification Plant Container Storage Areas

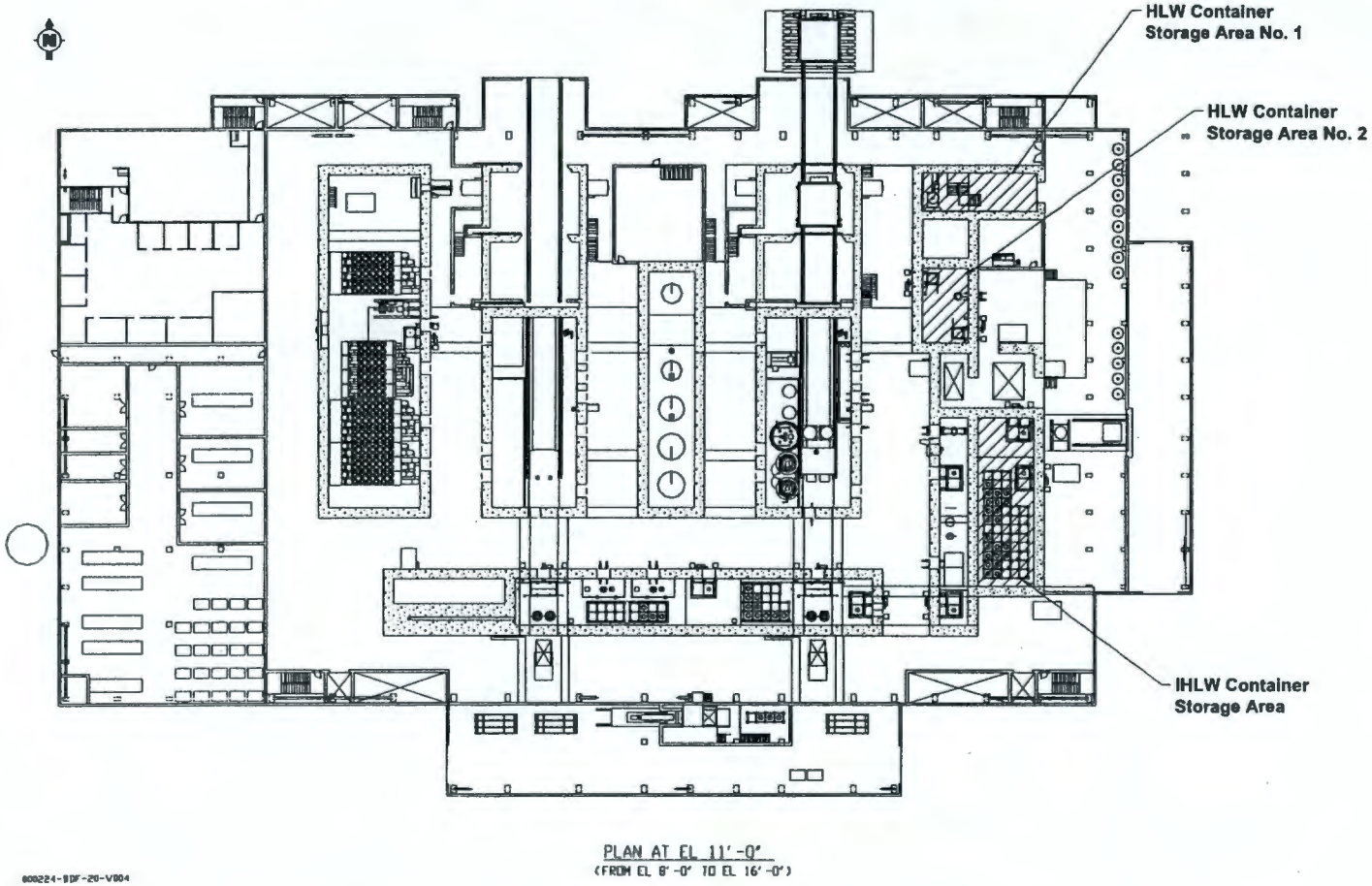

Figure 4-36. Pretreatment Container Storage Area Number 1

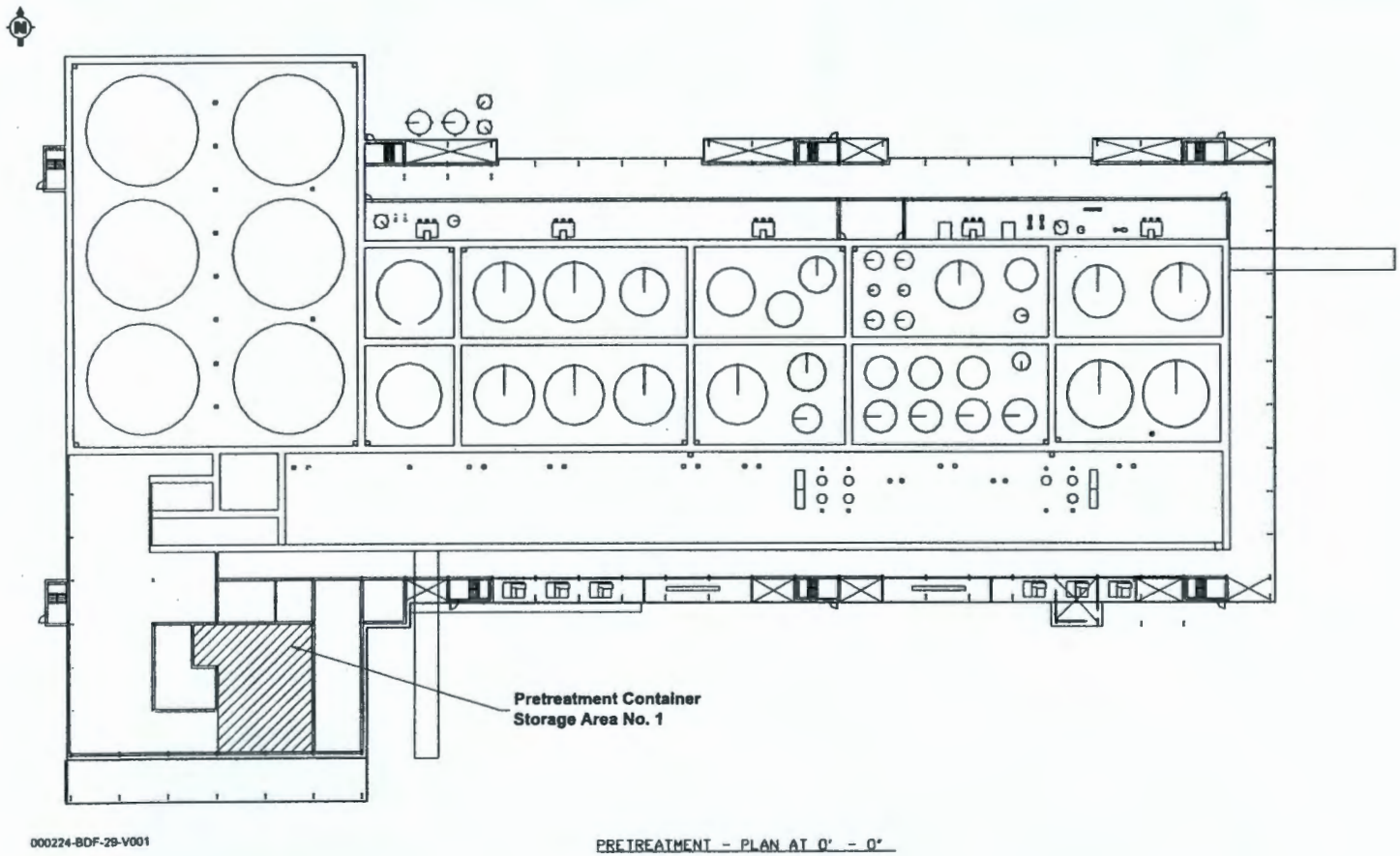

Figure 4-37. Pretreatment Container Storage Area Number 2

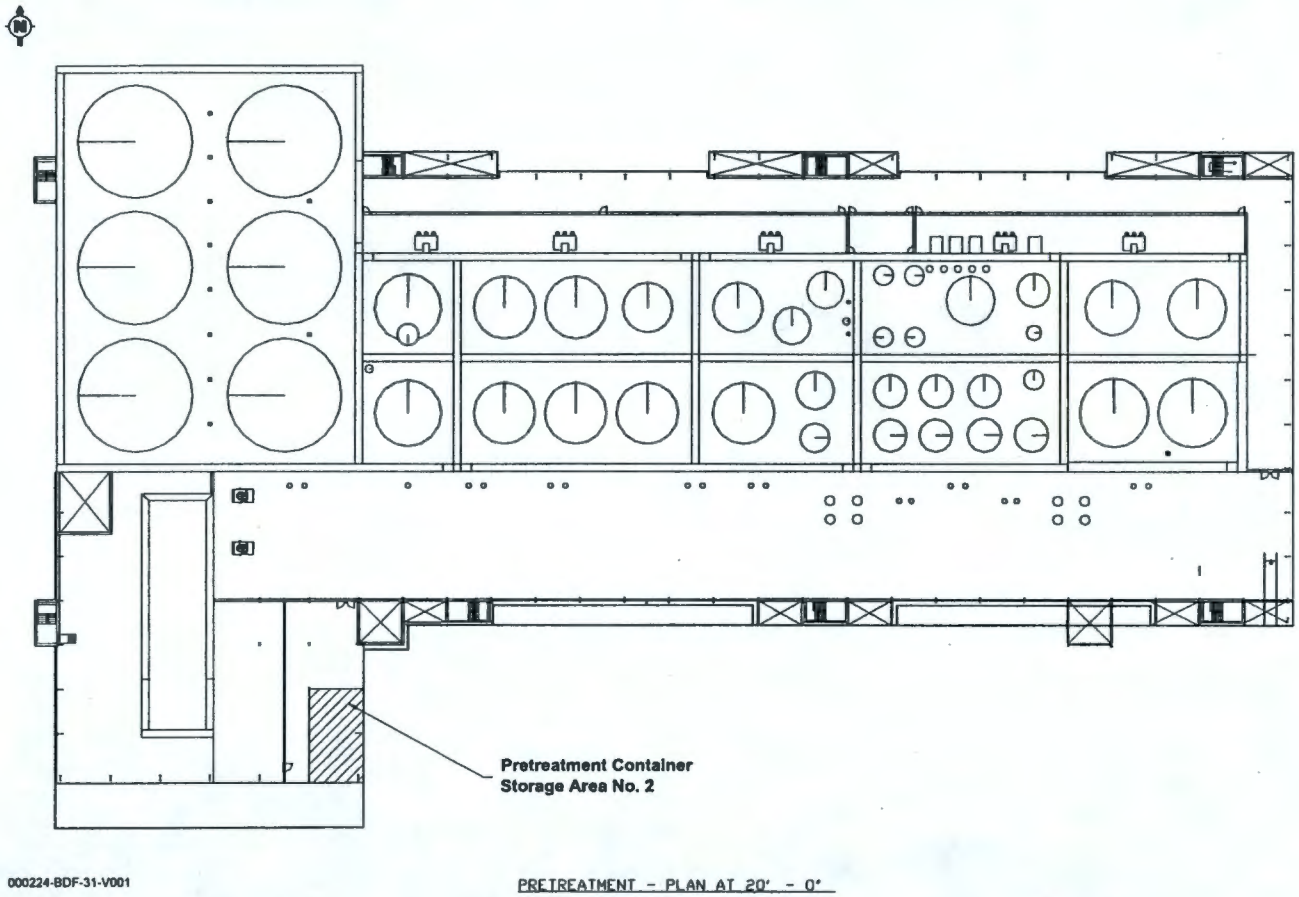

Figure 4-38. LAW Pretreatment Plant Container Storage Area

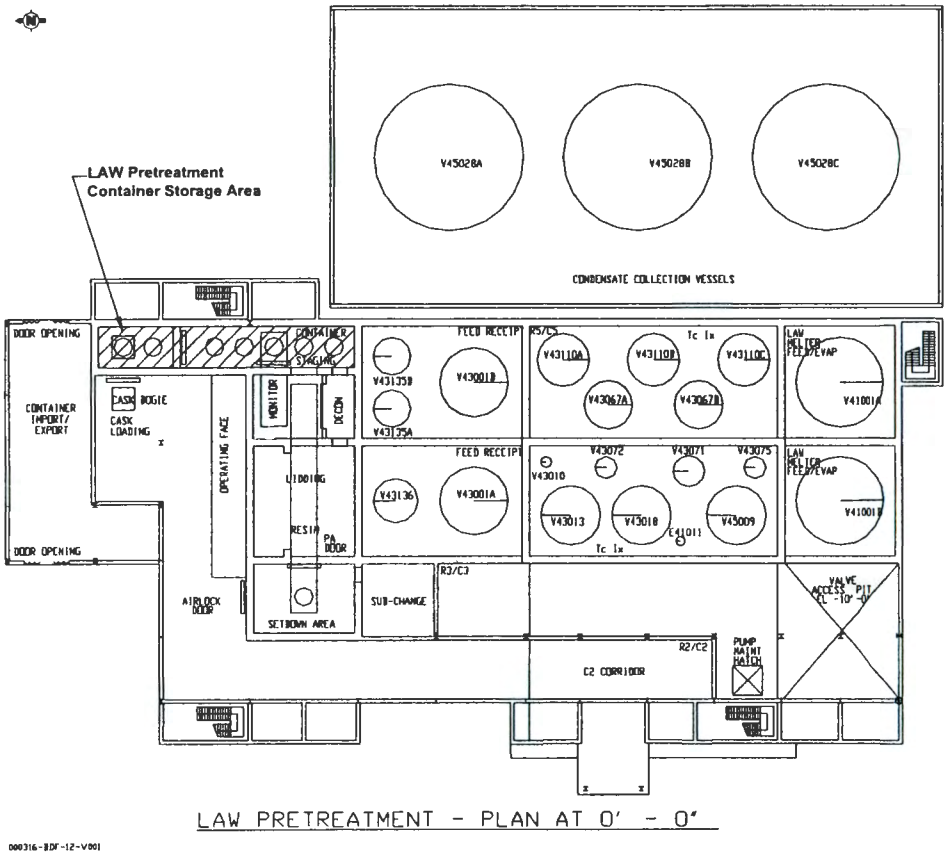

Figure 4-39. Stand Alone Miscellaneous Waste Container Storage Areas

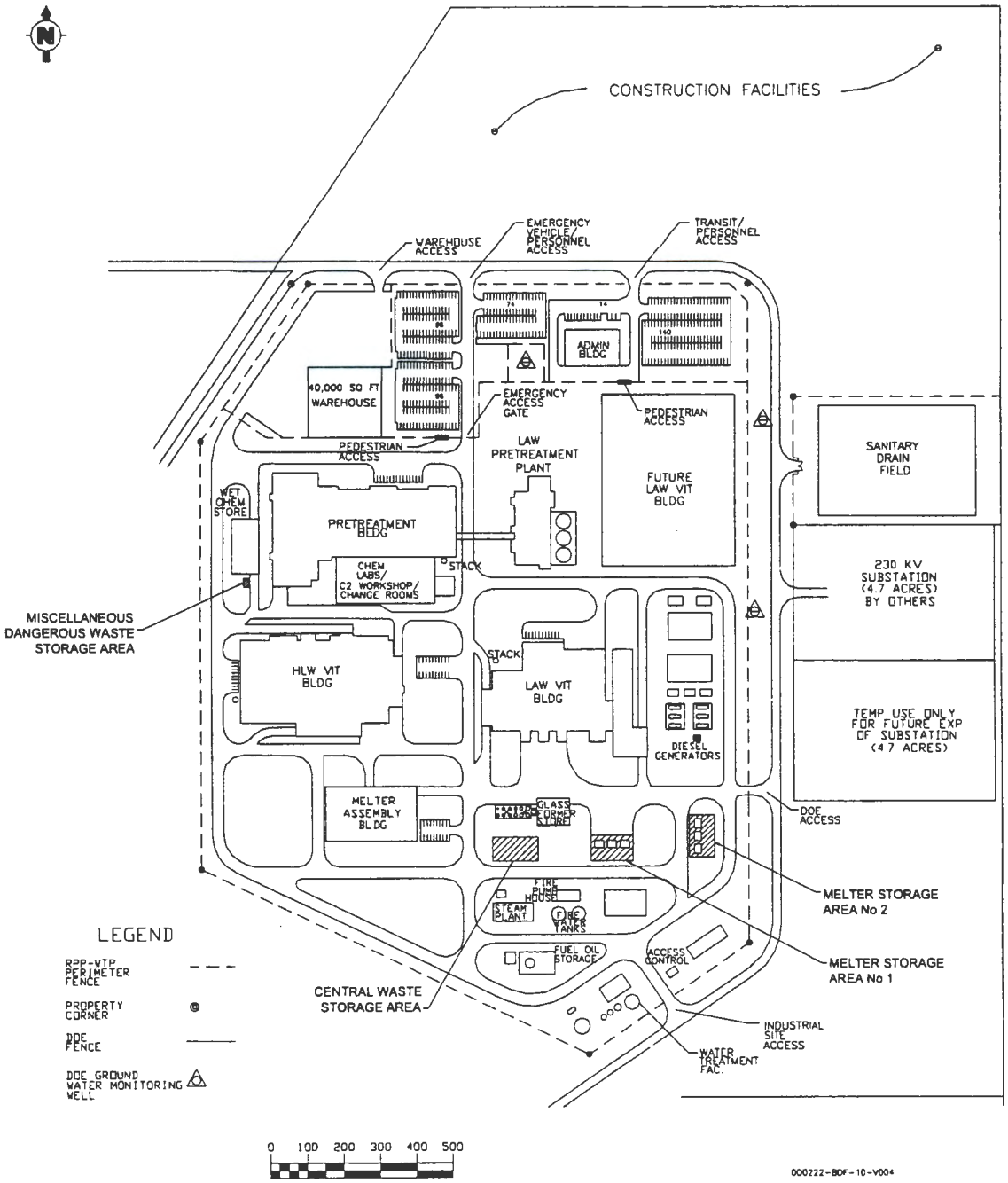

Figure 4-40. Typical Remotely Maintainable Pump

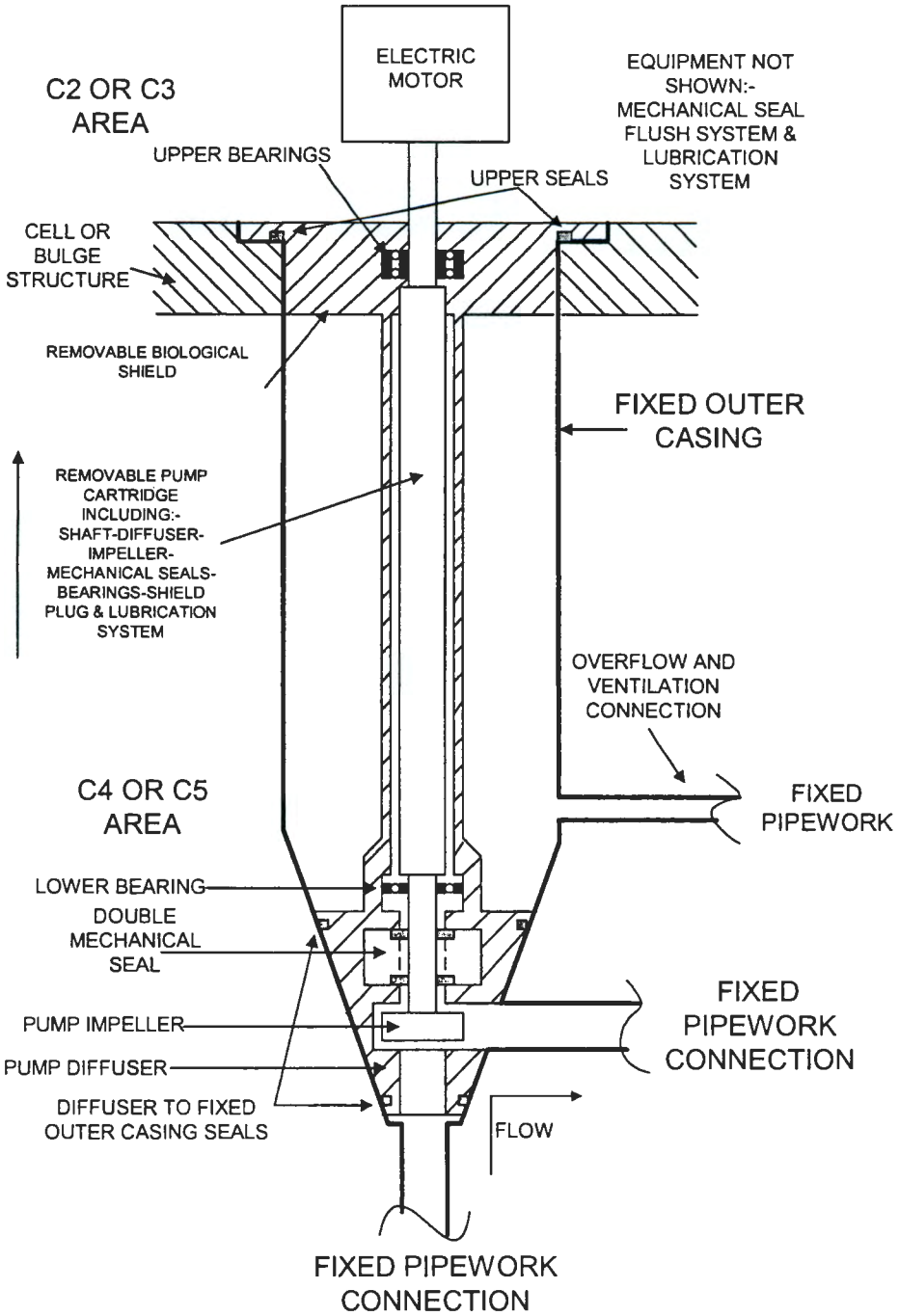

0047 v01.doc

Figure 4-41. Typical Arrangement of a Reverse Flow Diverter

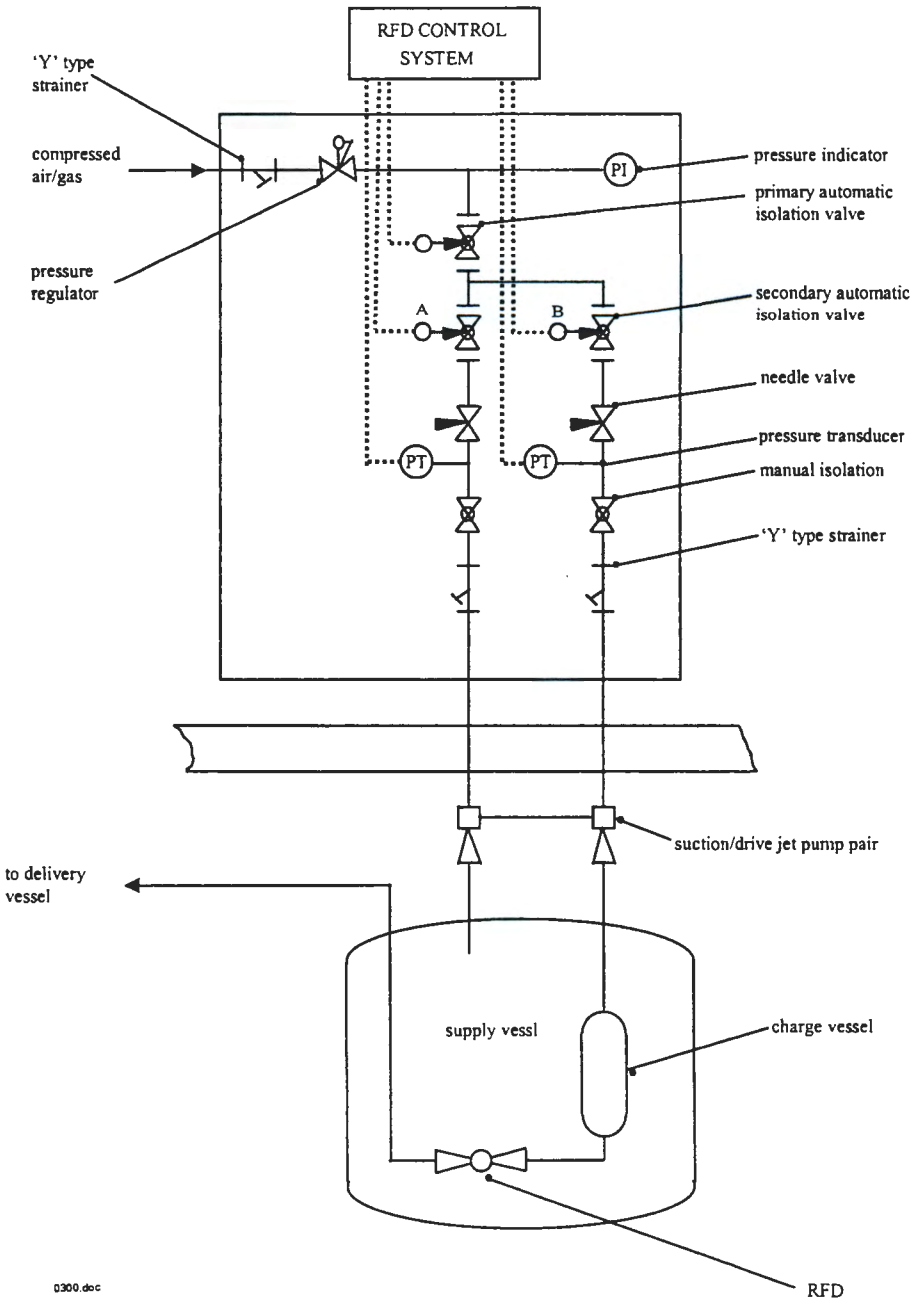

Figure 4-42. Basic Reverse Flow Diverter Design

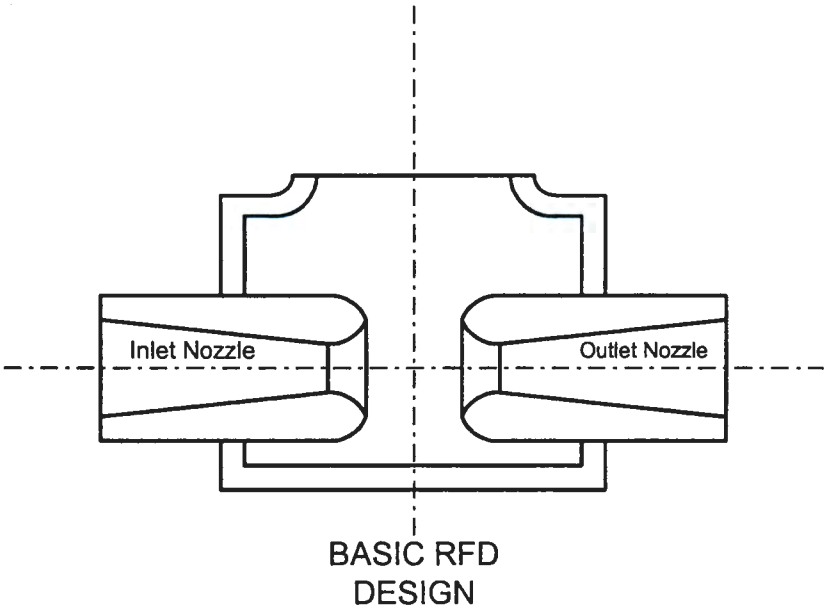

0050 v01.vsd

Figure 4-43. Typical Arrangement of a Steam Ejector System

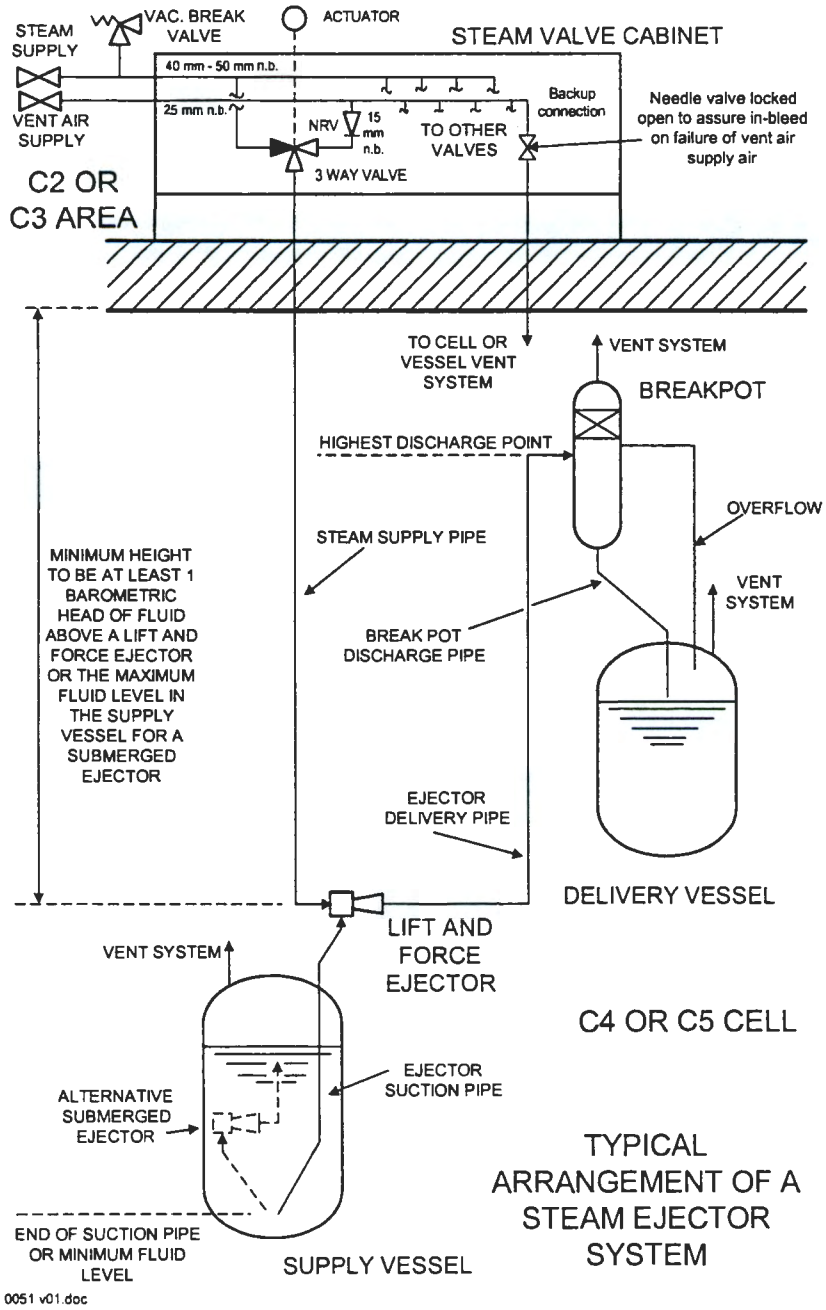

Figure 4-44. Typical Seal Pot Arrangement

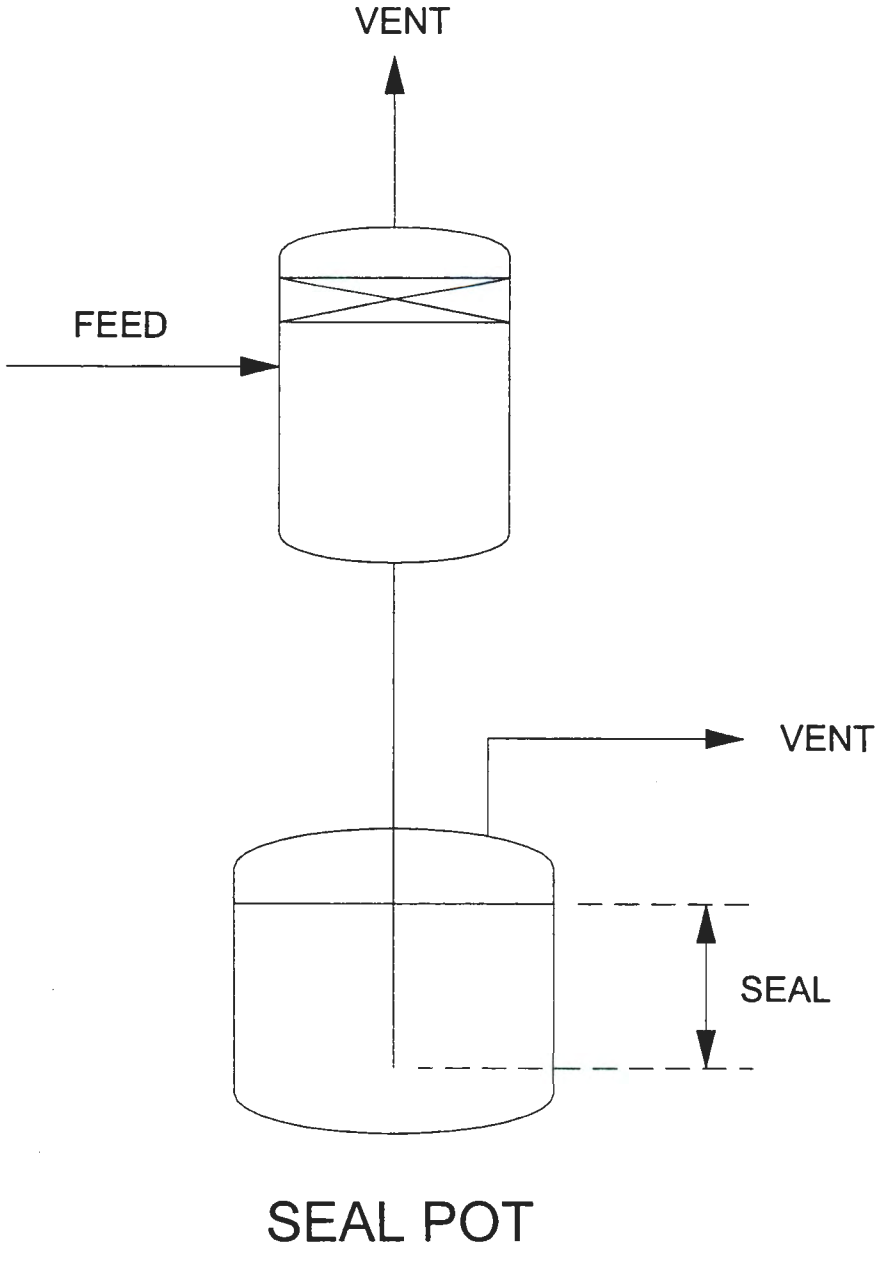

000323-BDF-11-V001

Figure 4-45. Typical Breakpot Arrangement

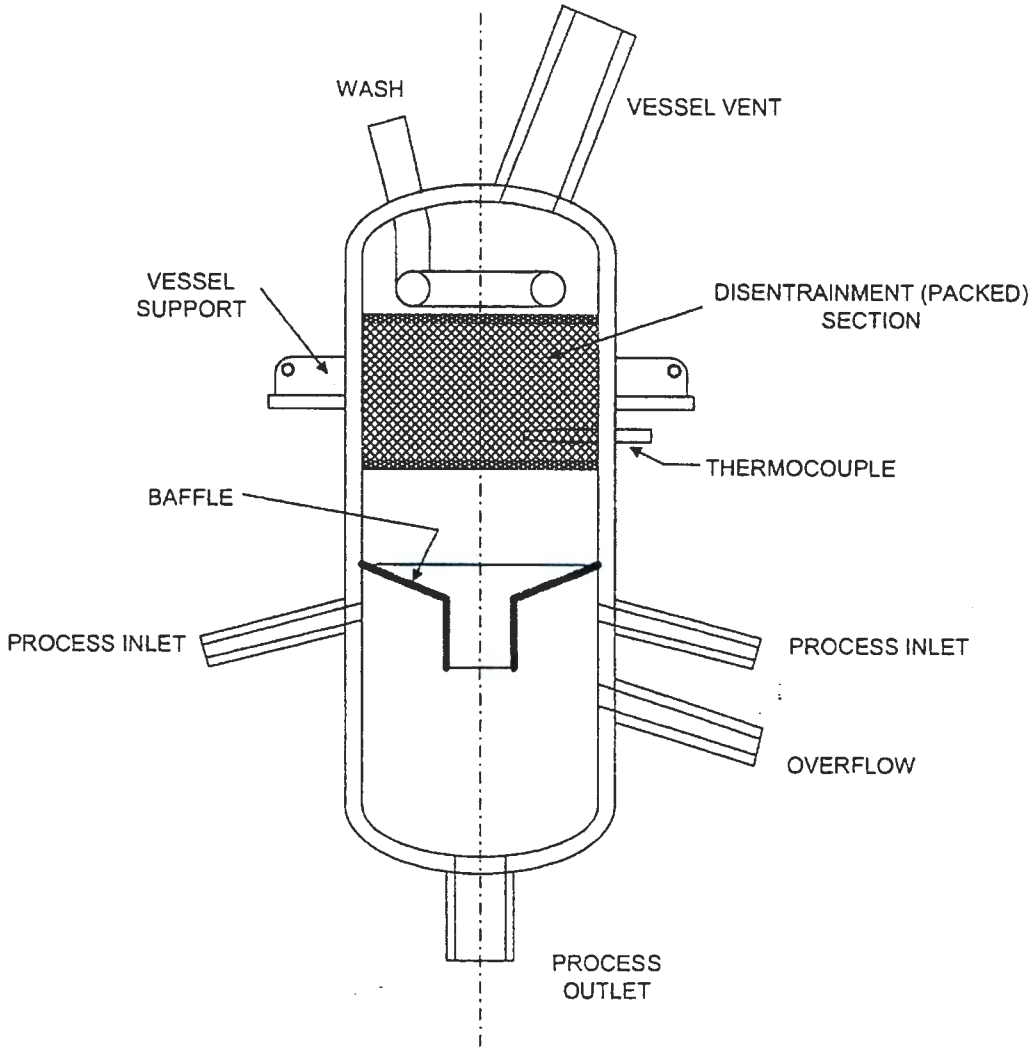

Figure 4-46. Typical Process Cell or Process Room

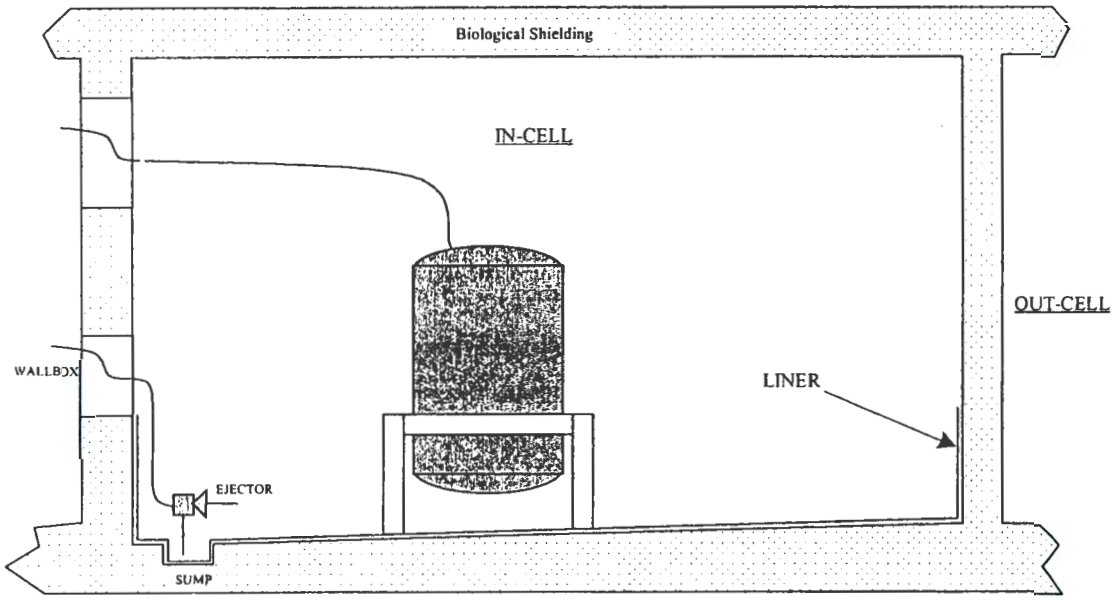

0053 v01.vsd

Figure 4-47. Typical Cave Layout for Remote Operations

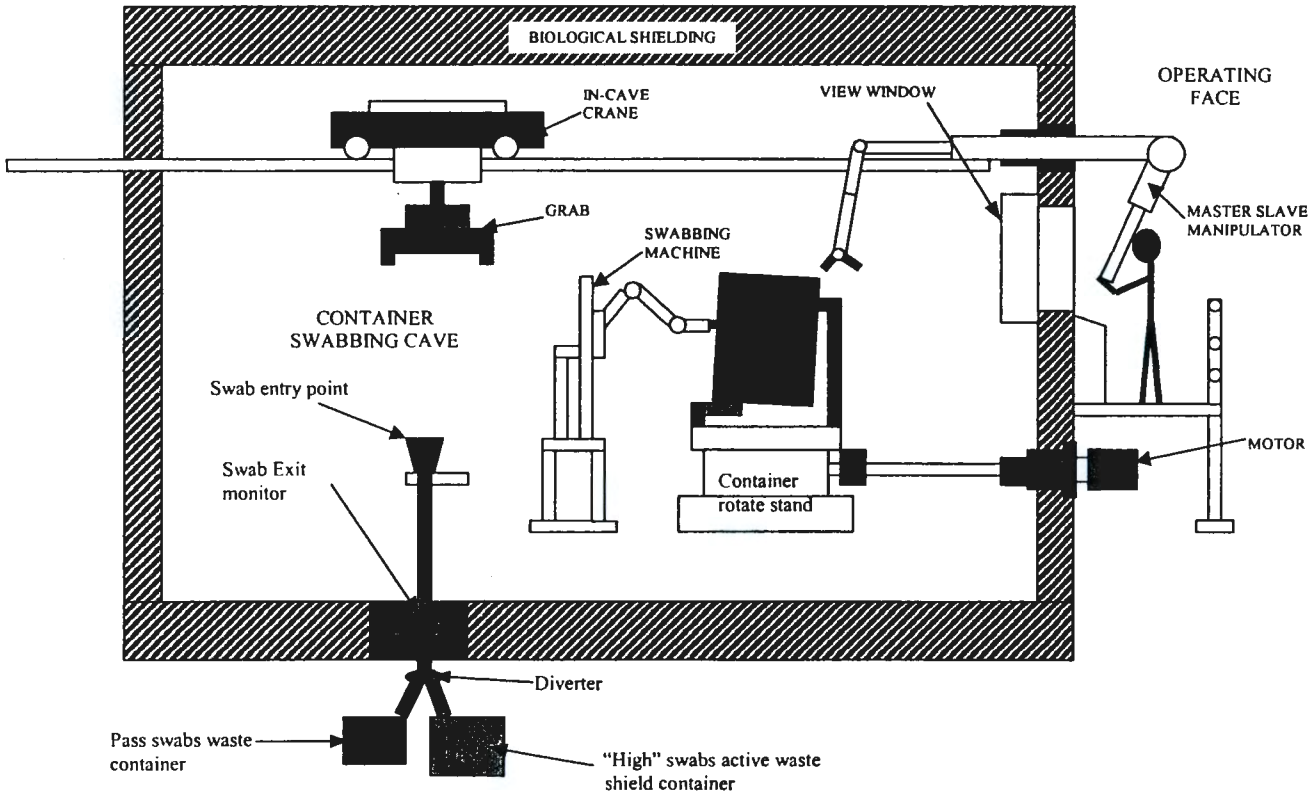

0054 v01 vsd

Figure 4-48. Typical Pretreatment Standardized Sump

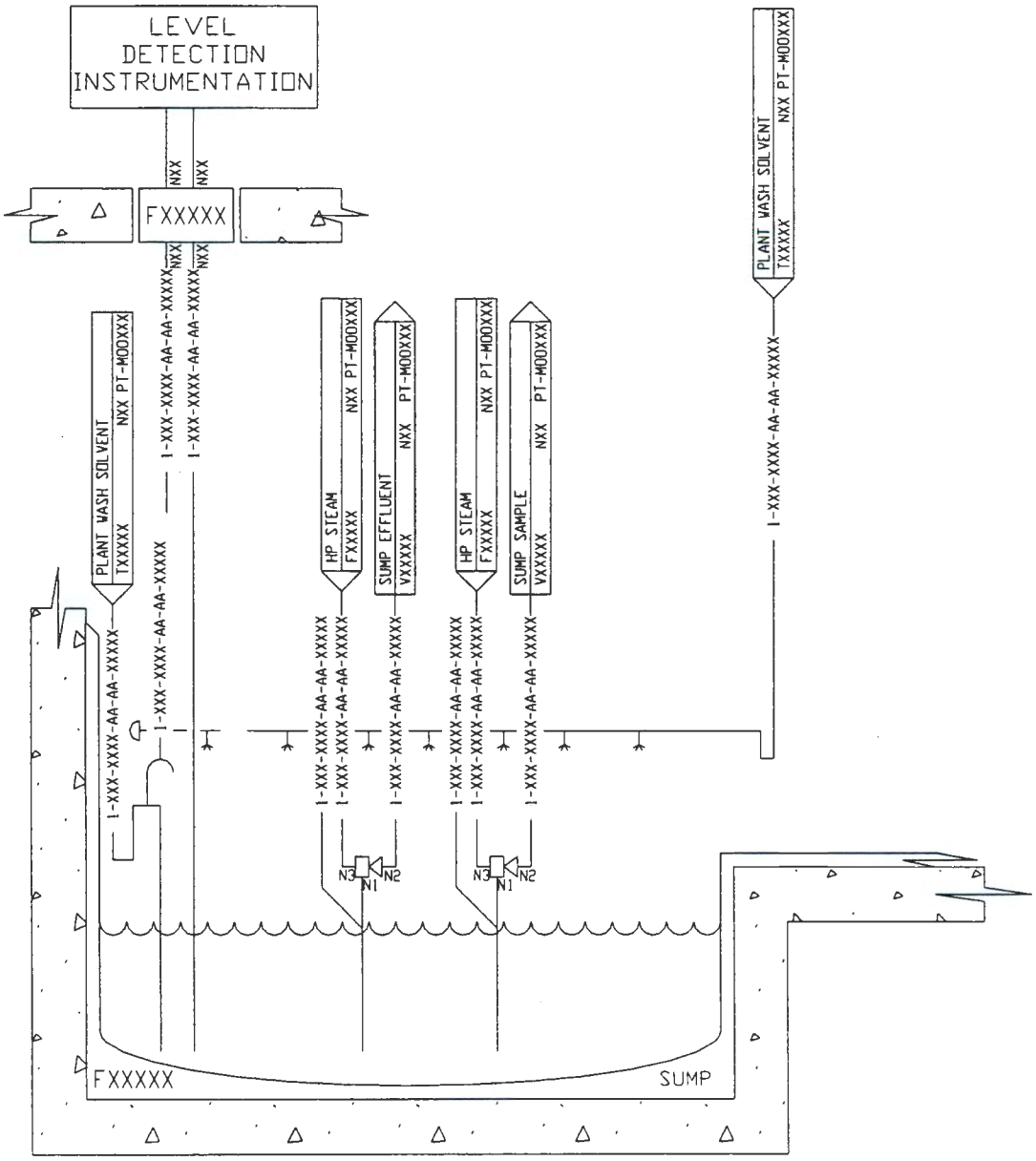

000224-BDF-02-V002

Figure 4-49. Typical Secondary Containment Drain

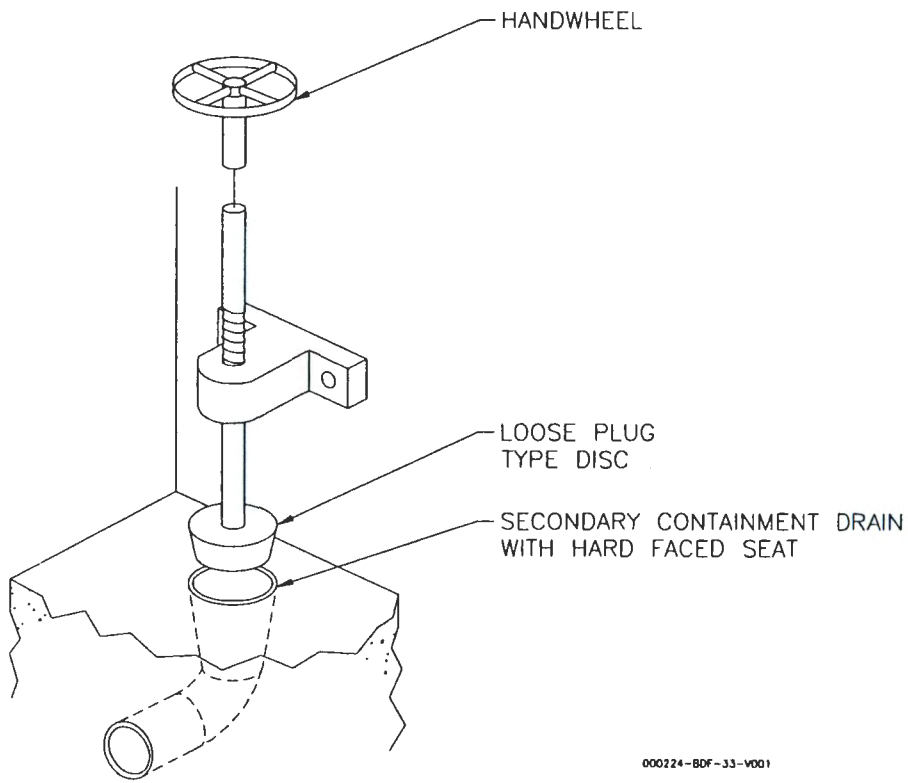

Figure 4-50. Typical Dry Mechanical Sump

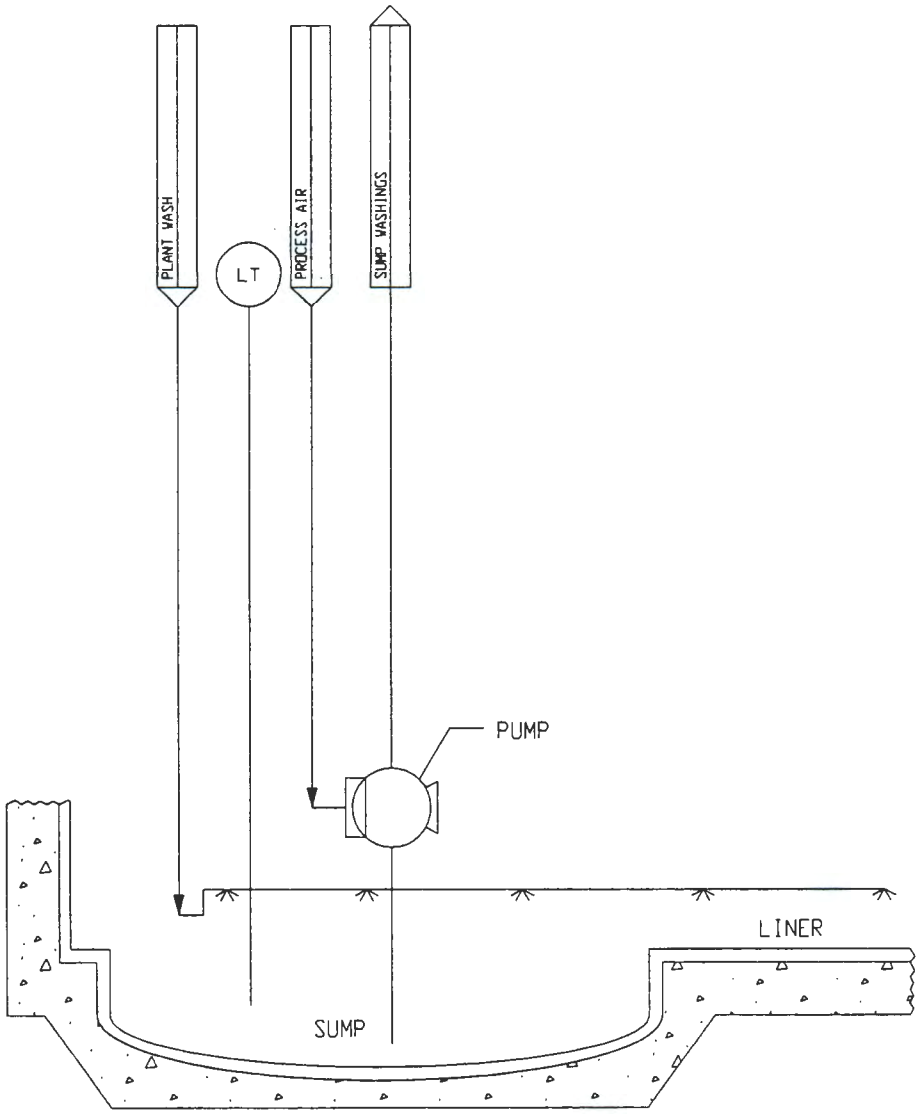

000224-BDF-27-V001

Figure 4-51. Typical Process Cell and Wet Mechanical Sump

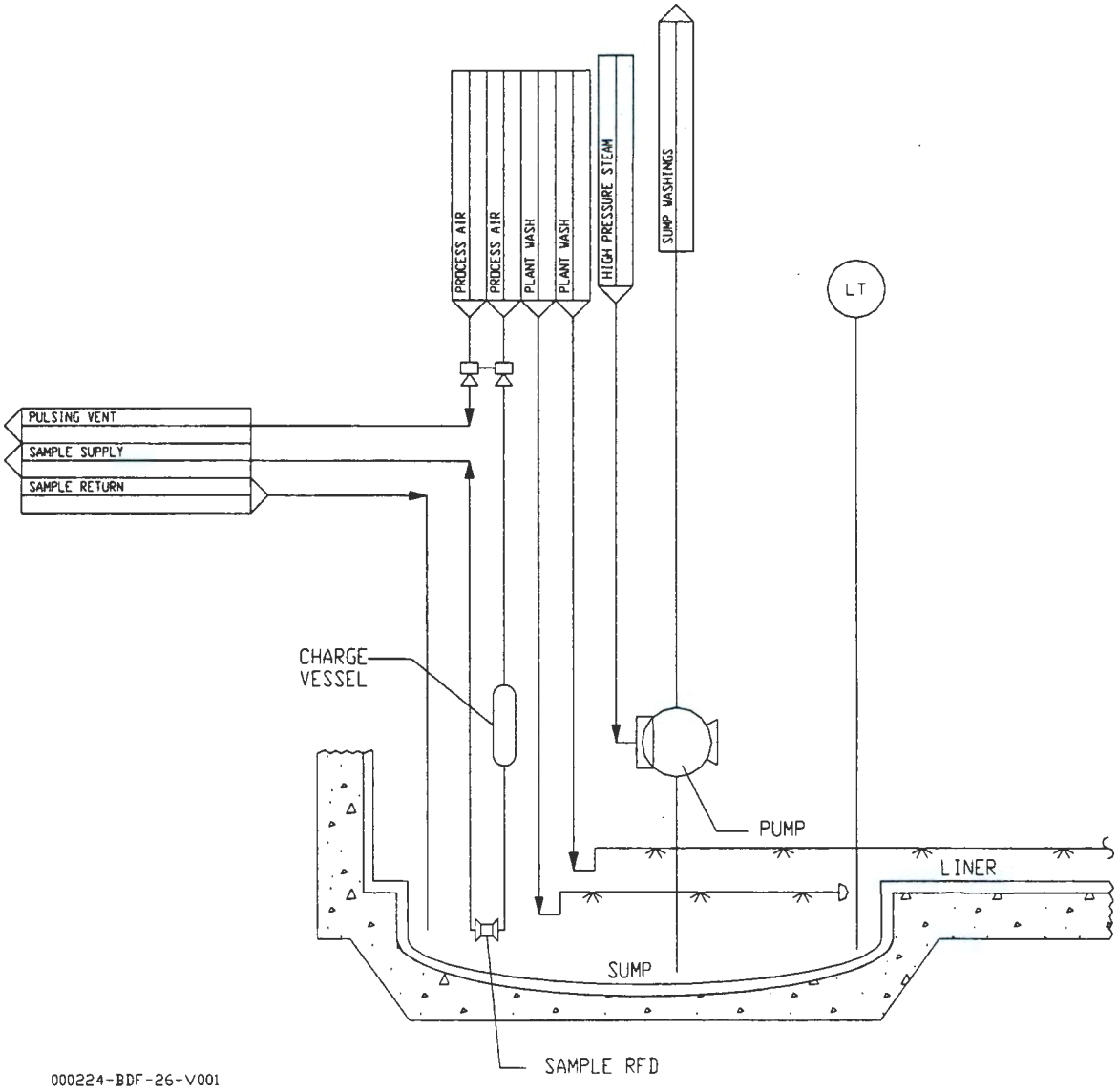

Figure 4-52. Typical Wash System Sump

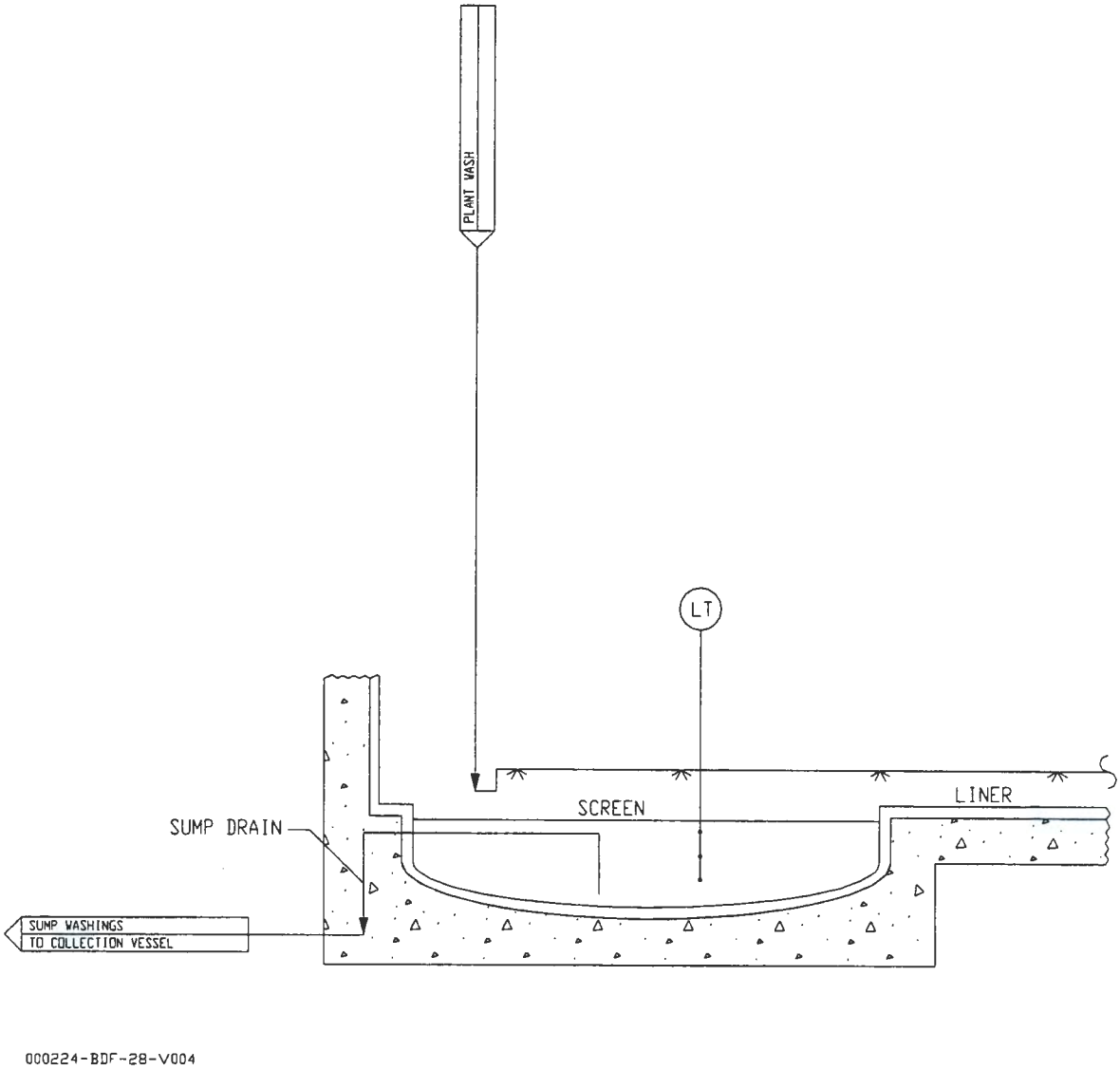

Figure 4-53. Pretreatment C3 Workshop Containment Building

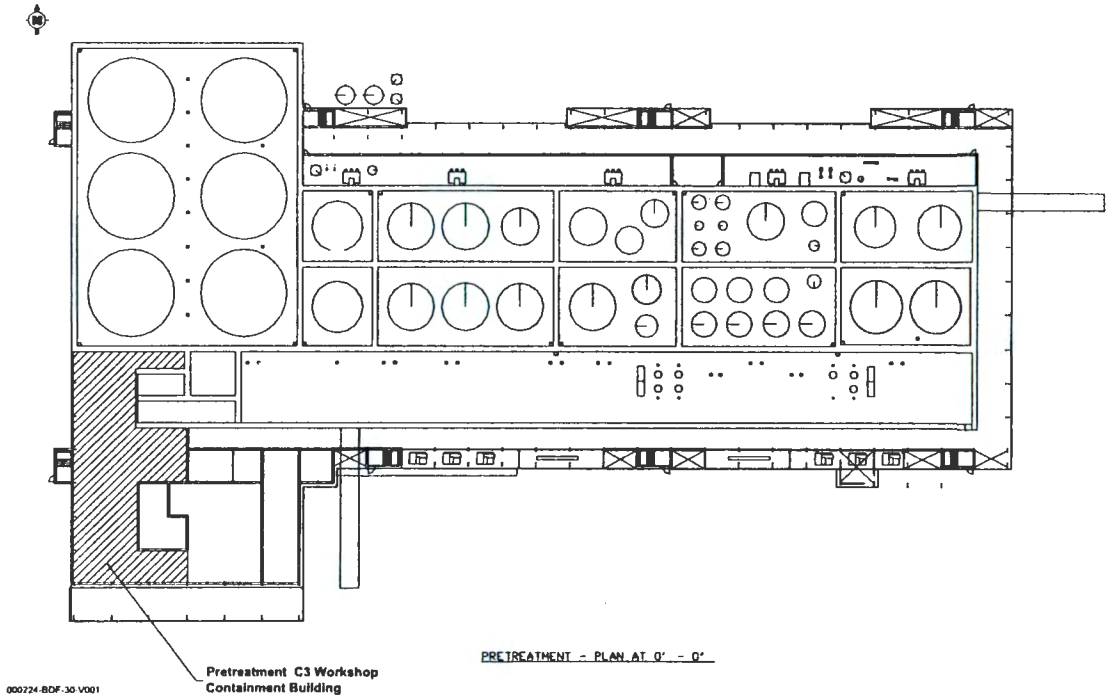

Figure 4-54. Pretreatment Maintenance Containment Building

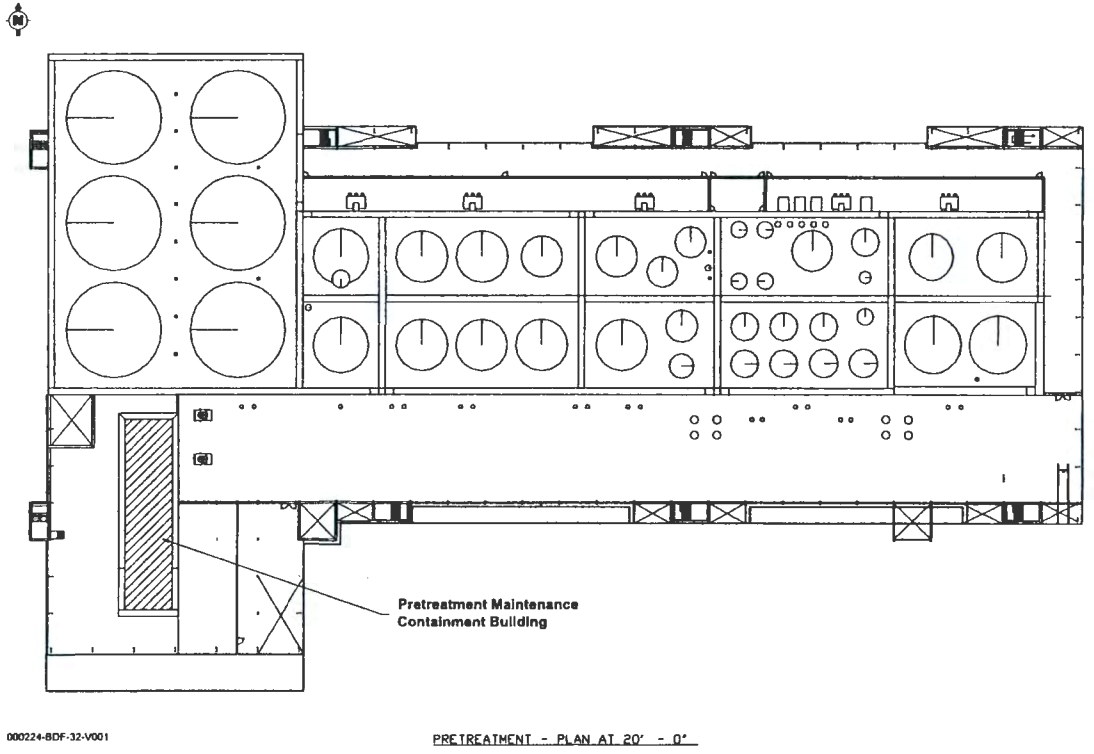

Figure 4-55. LAW Vitrification Plant Containment Buildings – LAW LSM Gallery and ILAW Container Finishing

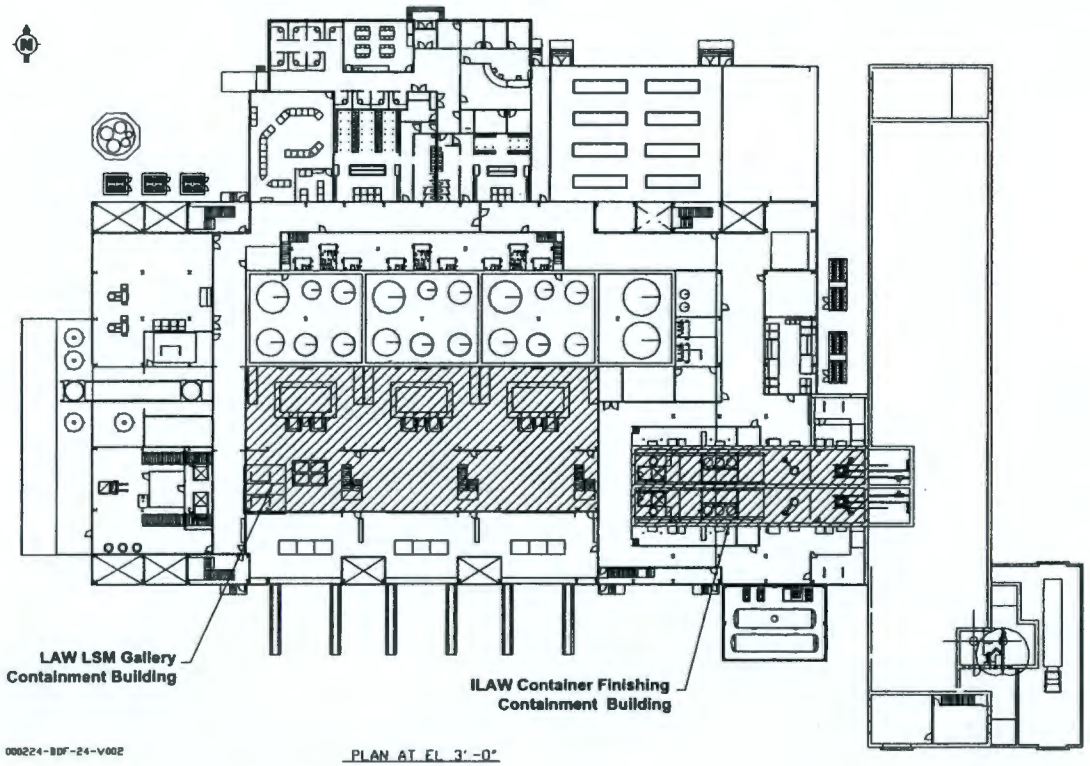

Figure 4-56. LAW Vitrification Plant Containment Buildings – ILAW Container Fixative and C3 Workshop

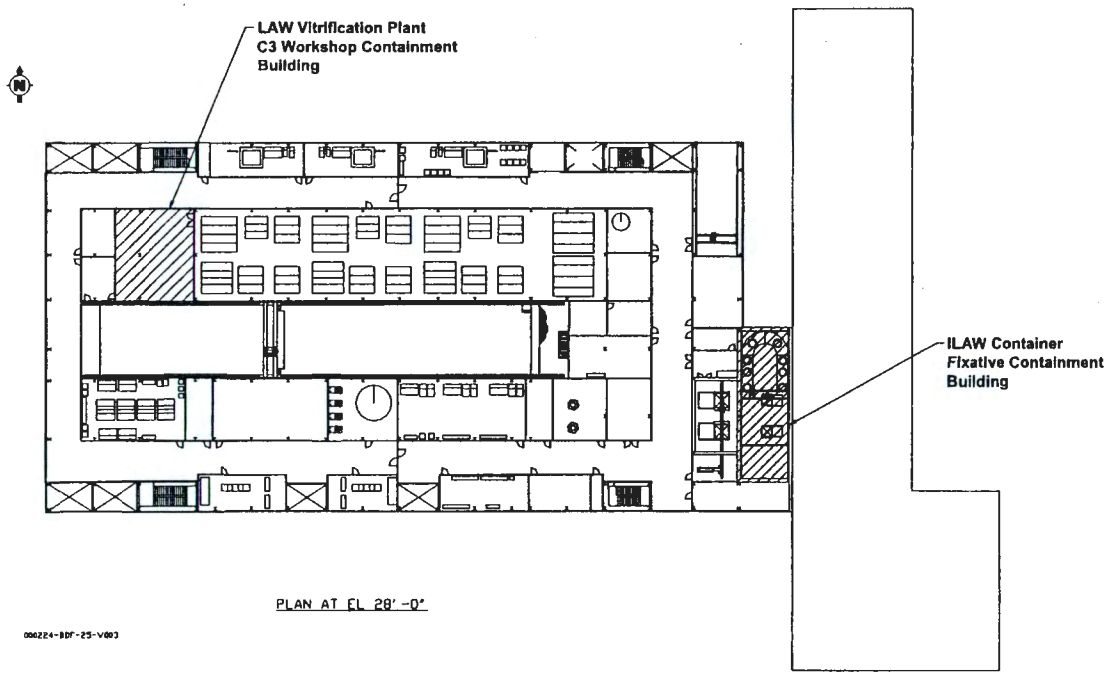

Figure 4-57. HLW Vitrification Plant Containment Buildings – HLW Melter, IHLW Container Weld, and IHLW Container Decontamination

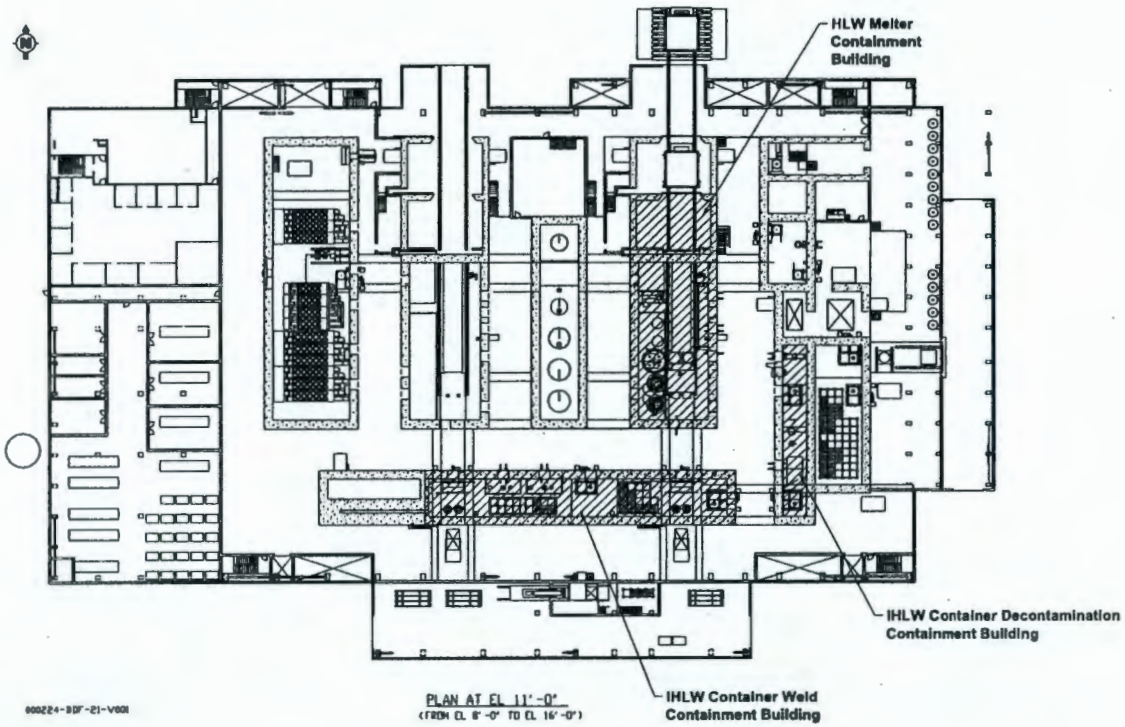

Figure 4-58. HLW Vitrification Plant Containment Building – HLW Vitrification Plant C3 Workshop

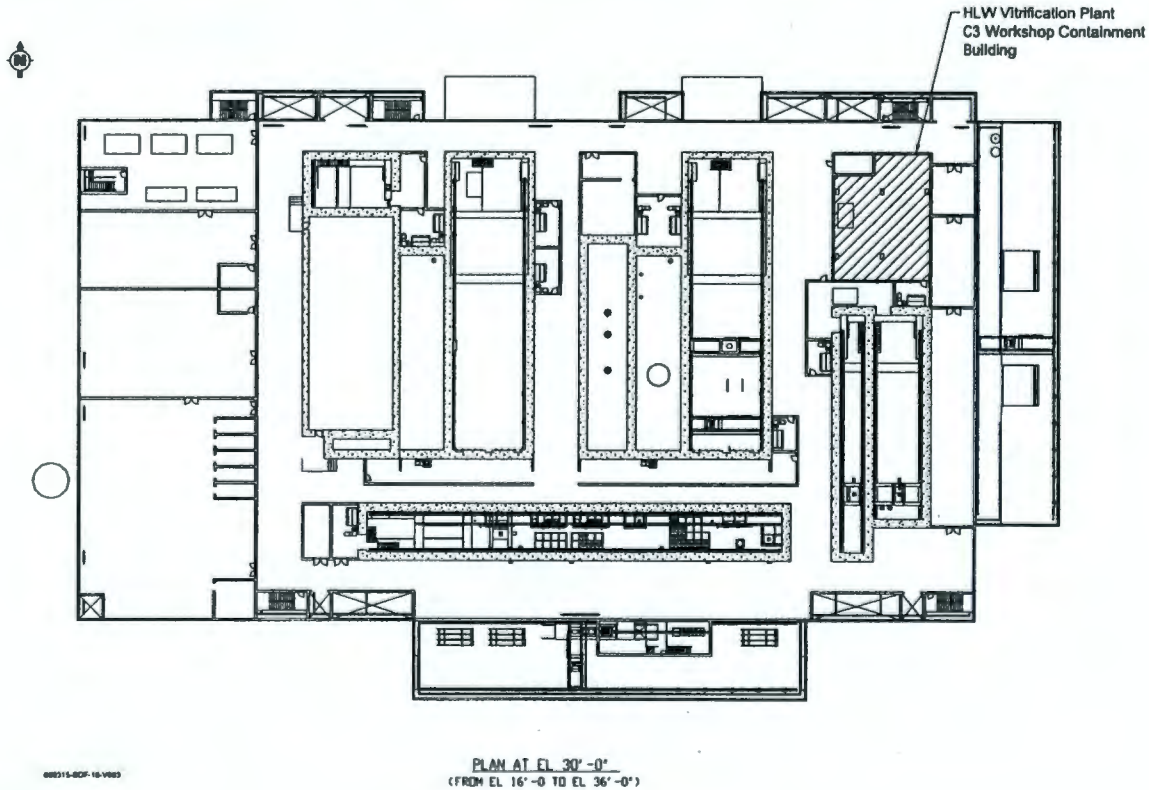

Table 4-1. Pretreatment Plant Areas and Systems

PT System	System Description	Engineering Drawing References [1]
Process Systems		
110	LAW Feed Receipt	DWG-W375PT-PR00017
120	LAW Feed Evaporation	DWG-W375PT-PR00003
210	HLW Feed Receipt	DWG-W375PT-PR00016
220	HLW Pretreatment	DWG-W375PT-PR00016
230	LAW Ultrafiltration	DWG-W375PT-PR00004
310	Cesium Removal Using Ion Exchange	DWG-W375PT-PR00005
320	Cesium Nitric Acid Recovery	DWG-W375PT-PR00009
360	Cesium Fresh Resin Addition	DWG-W375PT-PR00011
540	Pretreatment Plant Vessel Vent	DWG-W375PT-PR00014
550	Pretreatment Plant Wash and Effluent Collection	DWG-W375PT-PR00015
Mechanical Support Systems		
410	In-Cell Handling	DWG-W375PT-M00331
420	In-Cell Mechanical Equipment	DWG-W375PT-M00332
430	Decontamination	DWG-W375PT-M00333
440	Out-Cell Handling	DWG-W375PT-M00334
450	Out-Cell Mechanical Equipment and Containment	DWG-W375PT-M00335
HVAC Systems		
710	PT C1 Areas Ventilation	DWG-W375PT-HV00001
720	PT C2 Areas Ventilation	DWG-W375PT-HV00001
730	PT C3 Areas Ventilation	DWG-W375PT-HV00001
750	PT C5 Areas Ventilation	DWG-W375PT-HV00001
770	Pretreatment Vessel Vent Extract	DWG-W375PT-HV00001

* General Arrangement Drawings are identified in Appendix 4A.

Note:

1 See Appendix 4A for the locations of the drawings.

Table 4-2. LAW Pretreatment Plant Areas and Systems

LP System	System Description	Engineering Drawing References [1]
	Process Systems	
130	LAW Melter Feed Evaporation	DWG-W375LP-PR00008
140	LAW Melter Feed Lag Storage	DWG-W375LP-PR00009
330	Technetium Removal Using Ion Exchange	DWG-W375LP-PR00006
340	Technetium Eluant Recovery	DWG-W375LP-PR00010
365	Technetium Fresh Resin Addition	DWG-W375LP-PR00021
370	Spent Resin Collection and Dewatering	DWG-W375LP-PR00012
510, 550	LAW Pretreatment Plant Effluent Collection	DWG-W375LP-PR00002
540	LAW Pretreatment Plant Vessel Vent	DWG-W375LP-PR00011
	Mechanical Support Systems	
410	Spent Resin Solids Handling	DWG-W375LP-M00218-219
450	Miscellaneous Solid Waste Handling and Disposal	Not Applicable
	HVAC Systems	
710	LP C1 Area Ventilation	DWG-W375LP-HV00001
720	LP C2 Area Ventilation	DWG-W375LP-HV00001
730	LP C3 Area Ventilation	DWG-W375LP-HV00001
750	LP C5 Area Ventilation	DWG-W375LP-HV00001
770	LAW Pretreatment Vessel Vent Extract	DWG-W375LP-HV00001

* General Arrangement Drawings are identified in Appendix 4A.

Note:

1 See Appendix 4A for the locations of the drawings.

Table 4-3. LAW Vitrification Plant Areas and Systems

LV System	System Description	Engineering Drawing References [1]
	Process Systems	
110, 131, 132, 133	LAW Melter Feed	DWG-W375LV-PR01001
211, 212, 213	LAW Melter	DWG-W375LV-M00470
231, 232, 233, 234	LAW Melter Offgas Treatment	DWG-W375LV-PR01001
510	LAW Vitrification Plant Liquid Effluent	DWG-W375LV-PR01001
	ILAW Container Handling Systems	
221 - 226	LAW Melter Glass Pour	DWG-W375LV-M00490
311/312	ILAW Container Receipt and Transfer Lines 1 and 2	DWG-W375LV-M00111
313	ILAW Container Pour Cave Transfer	DWG-W375LV-M00113
314	ILAW Container Buffer Storage	DWG-W375LV-M00114
321/322	ILAW Container Inert Fill and Lid Weld	DWG-W375LV-M00951
331/332	ILAW Container Decontamination, Swabbing, and Monitoring	DWG-W375LV-M00736-738
340	ILAW Container Storage and Export	DWG-W375LV-M001791
	Other Mechanical Support Systems	
244	LAW Locally Shielded Melter Equipment Support	DWG-W375LV-M00673
421	LAW LSM Import/Export	DWG-W375LV-M00387
431	LAW LSM Consumables Import/Export and Disposal	DWG-W375LV-M00693
450	LAW Miscellaneous Solid Waste Packaging and Disposal	DWG-W375LV-M00702
	HVAC Systems	
710	LAW C1 Areas Ventilation	DWG-W375LV-HV00050
720	LAW C2 Areas Ventilation	DWG-W375LV-HV00050
730	LAW C3 Areas Ventilation	DWG-W375LV-HV00050
750	LAW C5 Areas Ventilation	DWG-W375LV-HV00050

* General Arrangement Drawings are identified in Appendix 4A.

Note:

1 See Appendix 4A for the locations of the drawings.

Table 4-4. HLW Vitrification Plant Areas and Systems

HV System	System Description	Engineering Drawing References [1]
	Process Systems	
110, 131	HLW Melter Feed	DWG-W375HV-PR00031
211	HLW Melter	DWG-W375HV-PR00001
231	HLW Melter Offgas Treatment	DWG-W375HV-PR00032
510	HLW Vitrification Plant Liquid Effluent	DWG-W375HV-PR00036
	IHLW Container Handling Systems	
305	Clean IHLW Container Import	DWG-W375HV-M00593
310	IHLW Container Handling and Buffer Store	DWG-W375HV-M00594
315	Pour Tunnel	DWG-W375HV-M00595
320	IHLW Container Weld, Glass Sampling, and Rework	DWG-W375HV-M00596
330	IHLW Container Decontamination, Swabbing, and Swab Monitoring	DWG-W375HV-M00525 DWG-W375HV-M00526 DWG-W375HV-PR00035
340	IHLW Container Storage and Export	DWG-W375HV-M00532
	Other Mechanical Support Systems	
241	HLW Melter Cave Support	DWG-W375HV-M00180
270	HLW Filter Cave	DWG-W375HV-M00436
420	HLW Melter Transport	DWG-W375HV-M00172
440	HLW Secondary Solid Waste Container Packaging	DWG-W375HV-M00325
450	Secondary Solid Waste Container Swabbing and Monitoring, Storage and Export	DWG-W375HV-M00206 DWG-W375HV-M00207 DWG-W375HV-M00208
	HVAC Systems	
710	HLW C1 Area Ventilation	DWG-W375HV-HV00001
720	HLW C2 Area Ventilation	DWG-W375HV-HV00001
730	HLW C3 Area Ventilation	DWG-W375HV-HV00001
750	HLW C5 Area Ventilation	DWG-W375HV-HV00001
770	HLW Vitrification C5 Area Vessel Ventilation/ Offgas Extraction	DWG-W375HV-HV00001

* General Arrangement Drawings are identified in Appendix 4A.

Note:

1 See Appendix 4A for the locations of the drawings.

Table 4-5. Container Storage Areas Summary

Container Storage Area	Maximum Waste Volume (gallons)	Dimensions (L × W × H) (feet)
Pretreatment Plant		
Pretreatment Container Storage Area No. 1	119,830	(36 × 40 × 20) + (9 × 18 × 20)
Pretreatment Container Storage Area No. 2	53,856	36 × 20 × 22
Law Pretreatment Plant		
LAW Pretreatment Container Storage Area	9,059	70 × 10 × 23
LAW Vitrification Plant		
ILAW Buffer Container Storage Area	14,138	22 × 63 × 20
ILAW Container Storage Area	309,672	50 × 240 × 35
LAW Container Storage Area	9,575	(21 × 33 × 25) + (28 × 20 × 25)
HLW Vitrification Plant		
IHLW Container Storage Area	16,082	67 × 23 × 27
HLW Container Storage Area No. 1	660	43 × 15 ×37
HLW Container Storage Area No. 2	110	20 × 33 × 25
Other Areas		
Central Waste Storage Area	718,080	120 × 80 × 16
Miscellaneous Dangerous Waste Container Storage Area	440	25 × 30 × 10
Melter Storage Area No. 1	271,973	70 × 45 × 35
Melter Storage Area No. 2	306,980	45 × 75 × 35

Table 4-6. Pretreatment Plant Tank Systems

No.	System	Vessel Number	Cell Number	Description	Mat.	Instrumentation/ Indicators	Capacity Maximum (gallons)	Dimensions (D × L) (inches)	PFD Drawing Number DWG-375PT-
1	110	V11020A	001	LAW Feed Receipt Vessel	SS	T, L, D	374,294	552 × 468	PR00017
2	110	V11020B	001	LAW Feed Receipt Vessel	SS	T, L, D	374,294	552 × 468	PR00017
3	110	V11020C	001	LAW Feed Receipt Vessel	SS	T, L, D	374,294	552 × 468	PR00017
4	110	V11020D	001	LAW Feed Receipt Vessel	SS	T, L, D	374,294	552 × 468	PR00017
5	110	V11020E	001	LAW Feed Receipt Vessel	SS	T, L, D	374,294	552 × 468	PR00017
6	110	V11020F	001	LAW Feed Receipt Vessel	SS	T,L, D	374,294	552 × 468	PR00017
7	210	V12001A	004	Envelope D Receipt Vessel	SS	T,L,D	93,376	300 × 416	PR00016
8	210	V12001B	003	Envelope D Receipt Vessel	SS	T, L, D	93,376	300 × 416	PR00016
9	210	V12001C	004	Envelope D Receipt Vessel	SS	T,L,D	93,376	300 × 416	PR000016
10	210	V12001D	004	Envelope D Receipt Vessel	SS	T,L,D	93,376	300 × 416	PR000016
11	210	V12001E	006	Envelope D Receipt Vessel	SS	T, L, D	93,376	300 × 416	PR00016
12	210	V12001F	003	Envelope D Receipt Vessel	SS	T, L, D	93,376	300 × 416	PR00016
13	210	V12002	011U	HLW Acidic Effluent Hold Vessel	SS	T, L, D	93,375	300 × 416	PR00016
14	220	V12004A	008	HLW ultrafiltration Feed Vessel	SS	T, L, D	22,755	162 × 322	PR00016

Table 4-6. Pretreatment Plant Tank Systems

No.	System	Vessel Number	Cell Number	Description	Mat.	Instrumentation/ Indicators	Capacity Maximum (gallons)	Dimensions (D × L) (inches)	PFD Drawing Number DWG-375PT-
15	220	V12004B	008	HLW Ultrafiltration Feed Vessel	SS	T, L, D	22,755	162 × 320	PR00016
16	220	G12001A	011C	HLW Ultrafiltration Unit	SS	P	676	47 × 90	PR00016
17	220	G12001B	011C	HLW Ultrafiltration Unit	SS	P	676	47 × 90	PR00016
18	220	G12002A	011C	HLW Ultrafiltration Unit	SS	P	676	47 × 90	PR00016
19	220	G12002B	011C	HLW Ultrafiltration Unit	SS	P	676	47 × 90	PR00016
20	220	V12006A	008	HLW Ultrafiltration Vessel	SS	T, L, D	25,871	162 × 350	PR00016
21	220	V12006B	008	HLW Ultrafiltration Vessel	SS	T, L, D	25,871	162 × 350	PR00016
22	220	V12006C	008	HLW Ultrafiltration Vessel	SS	T, L, D	25,871	162 × 350	PR00016
23	220	V12007	006	HLW Feed Blending Vessel	SS	T, L, D	17,193	144 × 304	PR00016
24	120	V11001A	012	LAW Feed Evaporator Feed Vessel	SS	T, L, D	118,760	324 × 454	PR00003
25	120	V11001B	002	LAW Feed Evaporator Feed Vessel	SS	T, L, D	118,760	324 × 454	PR00003
26	120	V11002	012	Evaporator Circulation Vessel	SS	T, L, D, Pd, P	39,224	276 × 460	PR00003
27	120	V11005	Process Bulge Area	LAW Feed Evaporator Process Condensate Pot	SS	L	1,077	60 × 118	PR00003
28	230	V12010A	003	Evaporator Concentrate Buffer	SS	T, L, D	57,626	240 × 384	PR00004

Table 4-6. Pretreatment Plant Tank Systems

No.	System	Vessel Number	Cell Number	Description	Mat.	Instrumentation/ Indicators	Capacity Maximum (gallons)	Dimensions (D × L) (inches)	PFD Drawing Number DWG-375PT-
29	230	V12010B	005	Evaporator Concentrate Buffer	SS	T, L, D	57,626	240 × 384	PR00004
30	230	V12011A	008	ultrafiltration Feed Vessel	SS	T, L, D	26,577	168 × 342	PR00004
31	230	V12011B	008	ultrafiltration Feed Vessel	SS	T, L, D	26,577	168 × 342	PR00004
32	230	G12003A	011C	Ultrafilter A	SS	P	676	47 × 90	PR00004
33	230	G12003B	011C	Ultrafilter B	SS	P	676	47 × 90	PR00004
34	230	G12004A	011C	Ultrafilter C	SS	P	676	47 × 90	PR00004
35	230	G12004B	011C	Ultrafilter D	SS	P	676	47 × 90	PR00004
36	230	V12015A	006	LAW Permeate Hold Vessel	SS	T, L, D	27,420	180 × 318	PR00004
37	230	V12015B	005	LAW Permeate Hold Vessel	SS	T, L, D	27,420	180 × 318	PR00004
38	230	V12016A	010	Entrained Solids Hold Vessel	SS	T, L, D	105,739	336 × 398	PR00004
39	230	V12016B	010	Entrained Solids Hold Vessel	SS	T, L, D	105,739	336 × 398	PR00004
40	310	V13001	007	LAW Feed Tank	SS	L	59,509	228 × 421	PR00005
41	310	C13001	007	Cs IX Column	SS	T, P, R	689	30 × 230	PR00005
42	310	C13002	007	Cs IX Column	SS	T, P, R	689	30 × 230	PR00005

Table 4-6. Pretreatment Plant Tank Systems

No.	System	Vessel Number	Cell Number	Description	Mat.	Instrumentation/ Indicators	Capacity Maximum (gallons)	Dimensions (D × L) (inches)	PFD Drawing Number DWG-375PT-
43	310	C13003	007	Cs IX Column	SS	T, P, R	689	30 × 230	PR00005
44	310	C13004	007	Cs IX Column	SS	T, P, R	689	30 × 230	PR00005
45	310	C13011	007	Cs IX Column	SS	T, P, R	689	30 × 230	PR00005
46	310	V13004	007	Treated LAW Collection Tank	SS	L	34,776	162 × 449	PR00005
47	310	V13007	007	Caustic Rinse Tank	SS	L	1,840	72 × 134	PR00005
48	310	V13008	007	Caustic Rinse Collection Tank	SS	L, D	3,290	78 × 142	PR00005
49	320	V13024A	007	Cs Eluate Receipt Vessel	SS	L	10,774	114 × 310	PR00009
50	320	V13024B	007	Cs Eluate Receipt Vessel	SS	L	10,774	114 × 310	PR00009
51	320	V13026	005	Evaporator Kettle	SS	T, P, D, L	3,161	78 × 230	PR00009
52	320	V13028	005	Recovered Acid Tank	SS	L, R	2,188	102 × 110	PR00009
53	320	V13027A	005	Cs Eluate Vessel	SS	T, L, D	10,025	120 × 290	PR00009
54	320	V13027B	005	Cs Eluate Vessel	SS	T, L, D	10,200	120 × 251	PR00009
55	320	V13029	005	Condensate Pot	SS	L	1,100	72 × 75	PR00009
56	320	V13073	007	Cs/Tc Concentrate Storage Tank	SS	L, T	8,142	138 × 216	PR00009

Table 4-6. Pretreatment Plant Tank Systems

No.	System	Vessel Number	Cell Number	Description	Mat.	Instrumentation/ Indicators	Capacity Maximum (gallons)	Dimensions (D × L) (inches)	PFD Drawing Number DWG-375PT-
57	430	V14001	Maintenance Cave	Decon Vessel	SS	L	1,950	5 × 20	M0042 [a]
58	430	V14003	Maintenance Cave	Pump Bowl	SS	L	400	4 × 4	M0042 [a]
59	550	V15013	009	Acidic Effluent Vessel	SS	L, T	89,492	264 × 450	PR00015
60	550	V15009	011U	Plant Wash Vessel	SS	L, T	106,760	336 × 354	PR00015
61	550	V15018	009	Contaminant Effluent Vessel	SS	L	89,492	264 × 450	PR00015

Storage tanks, all other tanks are considered treatment tanks or vessels.

Note:
[a] = Mechanical handling drawing is provided.

Key to Instrumentation/Indicators

T = Temperature indicator
L = Level indicator
P = Pressure indicator
D = Density indicator
Pd = Pressure differential
R = Radiological monitoring

Key to Materials

SS = Stainless Steel

Table 4-7. LAW Pretreatment Plant Tank Systems

No.	System	Vessel Number	Location	Description	Mat.	Instrumentation/ Indicators	Capacity Maximum (gallons)	Dimensions (D × L) (inches)	PFD Drawing Number DWG-W375LP-
1	130	V41011	Tc IX	Evaporator Vessel	SS	L, P, T, Pd, D	10,295	162 × 319	PR00008
2	130	V41013	Pump Bulges	Process Condensate Hold Vessel	SS	L	2,044	78 × 133.5	PR00008
3	140	V41001A	LAW Melter Feed/Evaporator	LAW Buffer Vessel A	SS	L,D,T	112,618	288 × 506	PR00009
4	140	V141001B	LAW Melter Feed/Evaporator	LAW Buffer Vessel B	SS	L,D,T	112,618	288 × 506	PR00009
5	330	V43001A	Feed Receipt	Tc IX Buffer Vessel	SS	L	55,579	440.4 × 222	PR00006
6	330	V43001B	Feed Receipt	Tc IX Buffer Vessel	SS	L	55,579	440.4 × 222	PR00006
7	330	V43056	Tc IX	Caustic Rinse Collection Tank	SS	L,D	1,645.8	172.8 × 58.8	PR00006
8	330	C43006	Tc IX	Tc IX Column	SS	T,P,R	1,101	30 × 230	PR00006
9	330	C43007	Tc IX	Tc IX Column	SS	T,P,R	1,101	30 × 230	PR00006
10	330	C43008	Tc IX	Tc IX Column	SS	T,P,R	1,101	30 × 230	PR00006
11	330	C43009	Tc IX	Tc IX Column	SS	T,P,R	1,101	30 × 230	PR00006
12	330	V43110A	Tc IX	Treated LAW Buffer Vessel	SS	P	32,224	168 × 399	PR00006
13	330	V43110B	Tc IX	Treated LAW Buffer Vessel	SS	P	32,224	168 × 399	PR00006
14	330	V43110C	Tc IX	Treated LAW Buffer Vessel	SS	P	32,224	168 × 399	PR00006

Table 4-7. LAW Pretreatment Plant Tank Systems

No.	System	Vessel Number	Location	Description	Mat.	Instrumentation/ Indicators	Capacity Maximum (gallons)	Dimensions (D × L) (inches)	PFD Drawing Number DWG-W375LP-
15	340	V43067A	Tc IX	Tc Eluant Receipt Vessel	SS	L	21,607	156 × 318	PR00010
16	340	V43067B	Tc IX	Tc Eluant Receipt Vessel	SS	L	21,607	156 × 318	PR00010
17	340	V43071	Tc IX	Recovery Acid Vessel	SS	L,R	2,504	109.2 × 102	PR00010
18	340	V43070A	Tc IX	Tc Eluant Vessel	SS	L,P,D,T	16,931	156 × 268	PR00010
19	340	V43070B	Tc IX	Tc Eluant Vessel	SS	L,P,D,T	16,931	156 × 276	PR00010
20	370	V43135A	Feed Receipt	Spent Resin Collection Vessel	SS	L	6,631	195.6 × 117.6	PR00012
21	370	V43135B	Feed Receipt	Spent Resin Collection Vessel	SS	L	6,631	195.6 × 117.6	PR00012
22	370	V43136	Feed Receipt	Resin Flush Collection Vessel	SS	L	9,808	206.4 × 141.6	PR00012
23	510	V45028A	Condensate Collection	Process Condensate Vessel	SS	L	308,412	480 × 612	PR00002
24	510	V45028B	Condensate Collection	Process Condensate Vessel	SS	L	308,412	480 × 612	PR00002
25	510	V45028C	Condensate Collection	Process Condensate Vessel	SS	L	308,412	480 × 612	PR00002
26	550	V45009	Tc IX	Plant Wash Vessel	SS	L,T	24,322	216 × 238	PR00015
27	550	V45013	Tc IX	Alkaline Effluent Vessel	SS	L,T	47,613	216 × 385	PR00015
28	550	V45018	Tc IX	Alkaline Effluent Vessel	SS	L	47,613	216 × 385	PR00015

Storage tanks, all other tanks are considered treatment tanks or vessels.

Table 4-7. LAW Pretreatment Plant Tank Systems

No.	System	Vessel Number	Location	Description	Mat.	Instrumentation/ Indicators	Capacity Maximum (gallons)	Dimensions (D × L) (inches)	PFD Drawing Number DWG-W375LP-

Key to Instrumentation/Indicators

T = Temperature indicator
L = Level indicator
P = Pressure indicator
D = Density indicator
Pd = Pressure differential
R = Radiological monitoring

Key to Materials

SS = Stainless Steel

Table 4-8. LAW Vitrification Plant Tank Systems

No.	System	Vessel No.	Location	Description	Mat.	Instrumentation/Indicators	Maximum Capacity (gallons)	Dimensions (D × L) (feet)	PFD Drawing Number DWG-375LV-
1	LV-110	V21001	L-186	LAW Concentrate Vessel	SS	T, L, D	11,000	14 × 14.5	PR01001
2	LV-110	V21002	L-187	LAW Concentrate Receipt Vessel	SS	T, L, D	11,000	14 × 14.5	PR01001
3	LV-110	V21003	L-188	LAW Concentrate Receipt Vessel	SS	T, L, D	11,000	14 × 14.5	PR01001
4	LV-131	V21101	L-186	LAW Melter 1 Feed Preparation Vessel	SS	T, L, D	4,200	10 × 10.8	PR01001
5	LV-132	V21201	L-187	LAW Melter 2 Feed Preparation Vessel	SS	T, L, D	4,200	10 × 10.8	PR01001
6	LV-133	V21301	L-188	LAW Melter 3 Feed Preparation Vessel	SS	T, L, D	4,200	10 × 10.8	PR01001
7	LV-131	V21102	L-186	LAW Melter 1 Feed Vessel	SS	T, L, D	4,300	10 × 10.9	PR01001
8	LV-132	V21202	L-187	LAW Melter 2 Feed Vessel	SS	T, L, D	4,300	10 × 10.9	PR01001
9	LV-133	V21302	L-188	LAW Melter 3 Feed Vessel	SS	T, L, D	4,300	10 × 10.9	PR01001
10	LV-231	V22101	L-186	SBS Condensate Vessel 1	SS	T, L, D	6,200	12 × 12	PR01002
11	LV-232	V22201	L-187	SBS Condensate Vessel 2	SS	T, L, D	6,200	12 × 12	PR01003
12	LV-233	V22301	L-188	SBS Condensate Vessel 3	SS	T, L, D	6,200	12 × 12	PR01004
13	LV-234	V22001	L-333	Caustic Collection Vessel	SS	T, L, D, R, pH	13,600	13.5 × 18	PR01006

Table 4-8. LAW Vitrification Plant Tank Systems

No.	System	Vessel No.	Location	Description	Mat.	Instrumentation/Indicators	Maximum Capacity (gallons)	Dimensions (D × L) (feet)	PFD Drawing Number DWG-375LV-
14	LV-510	V25003	L-189	SBS Condensate Collection Vessel	SS	T, L, D	18,600	16 × 18	PR01006
15	LV-510	V25001	L-189	LAW Plant Wash Vessel	SS	T, L, D	18,600	16 × 18	PR01006
16	LV-510	V25002	L-007	C3/C5 Drain/Sump Collection Vessel	SS	T, L, D	13,400	13.5 × 18	PR01006

Key to Instrumentation/Indicators

T = Temperature Indicator
L = Level indicator
P = Pressure indicator
D = Density indicator
R = Radiation monitor

Key to Materials

SS = Stainless Steel
H = Hastalloy C-22

NOTE: Materials of construction are preliminary and subject to change.

Table 4-9. HLW Vitrification Plant Tank Systems

No.	System	Vessel No.	Location	Description	Mat.	Instrumentation/Indicators	Maximum Capacity (gallons)	Dimensions (D × L) (feet)	PFD Drawing Number DWG-W375HV-
1	HV-110	V31001	H-027	HLW Concentrate Vessel	SS	T, L, D, P	7,600	10.5 × 15.8	PR00031
2	HV-110	V31002	H-027	HLW Concentrate Receipt Vessel	SS	T, L, D, P	7,600	10.5 × 15.8	PR00031
3	HV-131	V31101	H-153	HLW Feed Preparation Vessel	SS	T, L, D, P	2,100	7 × 9.7	PR00031
4	HV-131	V31102	H-153	HLW Melter Feed Vessel	SS	T, L, D, P	2,100	7 × 9.7	PR00031
5	HV-231	V32101	H-035	SBS Condensate Vessel	H	T, L, D, P	2,700	10 × 8.5	PR00031
6	HV-231	V32001	H-004	Scrubber Collection Vessel	SS	L, D	4,900	8 × 16	PR00032
7	HV-330	V33001	H-059	Canister Decontamination Vessel	T	T, L, D, P	560	2.5 × 16	PR00035
8	HV-330	V33002	H-059	Waste Neutralization Vessel	T	T, L, D, P	2,300	5.9 × 13.4	PR00035
9	HV-510	V35001	H-004	Low Active Effluent Vessel	SS	T, L, D, P	9,700	12 × 16	PR00036
10	HV-510	V35009	H-027	Decon Effluent Collection Vessel	SS	T, L, D, P	2,600	8 × 10.3	PR00032
11	HV-510	V35002	H-027	Acidic Waste Vessel	SS	T, L, D, P	5,800	10 × 13.8	PR00036
12	HV-510	V35003	H-027	HLW Plant Wash Vessel	SS	T, L, D, P	11,700	12 × 18	PR00036

Table 4-9. HLW Vitrification Plant Tank Systems

No.	System	Vessel No.	Location	Description	Mat.	Instrumentation/Indicators	Maximum Capacity (gallons)	Dimensions (D × L) (feet)	PFD Drawing Number DWG-W375HV-

Key to Instrumentation/Indicators

T = Temperature indicator
L = Level indicator
P = Pressure indicator
D = Density indicator
Pd = Pressure differential indicator

Key to Materials

SS = Stainless Steel
H = Hastalloy C-22
T = Titanium

NOTE: Materials of construction are preliminary and subject to change.

Table 4-10. Pretreatment Plant Sumps

Plant Item Number	Description	Cell Number	Effluent Destination
F15510	Law Receipt	001	Plant Wash Vessel (V15009), then recycle to head of process
F15512	Law Receipt	001	Plant Wash Vessel (V15009), then recycle to head of process
F15514	Law Receipt	001	Plant Wash Vessel (V15009), then recycle to head of process
F15516	Law Receipt	001	Plant Wash Vessel (V15009), then recycle to head of process
F15518	Law Evap FD	002	Plant Wash Vessel (V15009), then recycle to head of process
F15520	B&D Receipt	003	Plant Wash Vessel (V15009), then recycle to head of process
F15522	Permeate Hold	005	Plant Wash Vessel (V15009), then recycle to head of process
F15524	Cs Removal/Nitric Acid Recovery	007	Plant Wash Vessel (V15009), then recycle to head of process
F15526	Effluent Treatment	009	Plant Wash Vessel (V15009), then recycle to head of process
F15528	Law Evap FD	012	Plant Wash Vessel (V15009), then recycle to head of process
F15530	B&D Receipt	004	Plant Wash Vessel (V15009), then recycle to head of process
F15532	Cs/Tc Concentrate Storage	006	Plant Wash Vessel (V15009), then recycle to head of process
F15534	Ultrafilration	008	Plant Wash Vessel (V15009), then recycle to head of process
F15536	Entrained Solids	010	Plant Wash Vessel (V15009), then recycle to head of process
F15538	Incell Pumps, Ultrafilter & Valves	011	Plant Wash Vessel (V15009), then recycle to head of process
F15540	Incell Pumps, Ultrafilter & Valves	011	Plant Wash Vessel (V15009), then recycle to head of process
F15542	Incell Pumps, Ultrafilter & Valves	011	Plant Wash Vessel (V15009), then recycle to head of process
F15544	Incell Pumps, Ultrafilter & Valves	011	Plant Wash Vessel (V15009), then recycle to head of process
F15546	Incell Pumps, Ultrafilter & Valves	011	Plant Wash Vessel (V15009), then recycle to head of process

Note: Sump locations are shown in general arrangement drawings provided in Appendix 4A.

Table 4-11. LAW Pretreatment Plant Sumps

Plant Item Number	Description	Cell Number*	Effluent Destination
F45001	Sump for C3 Bulge Area	C3 Bulge Area	Plant Wash Vessel (V45009), then recycle to head of process
F45002	Sump for C3 Bulge Area	C3 Bulge Area	Plant Wash Vessel (V45009), then recycle to head of process
F45003	Sump for C3 Bulge Area	C3 Bulge Area	Plant Wash Vessel (V45009), then recycle to head of process
F45004	Sump for V43013, V43018, V45009, V43075, V43071, V43072 (Tc IX)	Tc IX	Plant Wash Vessel (V45009), then recycle to head of process
F45005	Sump for V43136 & V43001A	Feed Receipt	Plant Wash Vessel (V45009), then recycle to head of process
F45006	Sump for V43001B	LAW Melter Feed Evaporator	Plant Wash Vessel (V45009), then recycle to head of process
F45007	Sump for V43001A (LAW Melter Feed/Evaporator)	Tc IX	Plant Wash Vessel (V45009), then recycle to head of process
F45008	Sump for V43110A, V43110B, V43110C, V43056, V43067A, V43067B	Feed Receipt	Plant Wash Vessel (V45009), then recycle to head of process
F45009	Sump for Spent Resin Handling Area Decontamination Booth	Decontamination Room	Plant Wash Vessel (V45009), then recycle to head of process
F45010	Sump for Spent Resin Handling Area	Spent Resin Handling Area	Plant Wash Vessel (V45009), then recycle to head of process
F45011	Sump for C3 Bulge Area (-30' -0" Level)	C3 Bulge Area	Plant Wash Vessel (V45009), then recycle to head of process
F45012	Sump for C5 Pump Room (-30' -0" Level)	C5 Pump Room	Plant Wash Vessel (V45009), then recycle to head of process
F45013	Sump for V43010, V43071, V43072, V45009, V45013, V45018 (-30' - 0" Level)	Tc IX	Plant Wash Vessel (V45009), then recycle to head of process
F45014	Sump for V45028A, V45028B, V45028C	Condensate Collection	Return to Condensate Collection Vessels (43028A, V43028B, or V43028C) or to Plant Wash Vessel (V45009), then recycle to head of process

* All sump locations are approximate pending design completion.

Table 4-12. LAW Vitrification Plant Sumps and Secondary Containment Drains

Plant Item Number	Description	Sump/Drain Type	Effluent Destination
F22### (note 1)	Process Cell	SCD (note 2)	V25002
F22### (note 1)	Process Cell	SCD (note 2)	V25002
F22### (note 1)	Process Cell	SCD (note 2)	V25002
F23### (note 1)	Container Decon Line 1	SCD (note 2)	Drains to Pour Cell Sump
F23### (note 1)	Container Decon Line 2	SCD (note 2)	Drains to Pour Cell Sump
F25### (note 1)	Plant Wash Cell	SCD (note 2)	V25002
F25### (note 1)	C3/C5 Drain Vessel Cell	S (Type 2, note 3)	V25001
F25### (note 1)	Pour Cell	S (Type 2, note 3)	V25002

Notes:

1. Secondary Containment Drains and Sumps are not tagged on PFDs and GAs at this time.
2. Plugged Secondary Containment Drain. Plug can be removed remotely.
3. Dry mechanical sump.
4. Not all secondary containment drains have been identified at this time. Future drains will be shown on PFDs and GAs as they are identified.
5. S = Sump; SCD = Secondary Containment Drain

Table 4-13. HLW Vitrification Plant Sumps and Secondary Containment Drains

Plant Item Number	Description	Sump Type	Effluent Destination
F31012	Wet Process Cell	1	V35003
F32008	Melter Cave - SBS Condensate Collection Cell	1	V35003
F32XXX	MelterCave	2	F32008
F33168	Canister Decon Cell	1	V35003
F32244	Secondary Offgas Cell	1	V35003
F35078	Wet Process Cell - Decon Effluent Area	1	F31012
F33244	Canister Rinse Tunnel	1	V35003
F33134	Bogie Decon Canister Rinse Tunnel	4	V35003
F35062	Non-Active Effluent Collection Room	4	V35011
F33163	Canister Handling Cave-Weld Area	2	V35003
F33164	Canister Transfer Tunnel-Melter 1	4	V35003
F33218	Canister Handling Cave-Laydown Area	2	F33164
F30070	Flask Inport/Export Tunnel	4	V35003
F34132	Consumables Drum Transfer Tunnel	4	V35003
F34128	Bogie Maintenance-Consumables Drum Transfer Tunn	4	V35003
F33246	Crane Decon-Canister Handling Cave	4	V35003
F32156	Crane Maintenance - Filter Cave	4	V35003
F34165	C3/C5 Airlock-Melter 1	4	V35003
F31141	Melter 1 Active Services Cell	3	V35003
F32272	Crane Decon-Melter 1	4	VF34165
F32298	Crane Maintenance-Melter 1	4	F34124
F34124	C2/C3 Airlock-Melter 1	4	V35003
F34176	Drum Sabbing/Monitoring Area	4	V35003
F34180	Crane Maint. Area - Drum Swabbing/Monitoring	4	V35003

Notes:

Type 1 sump : Cell Sump & Wet Mechanical Cave Sump

Type 2 sump : Dry Mechanical Cave Sump

Type 3 sump : Process Pipe Transfer Duct Drains

Type 4 sump : Wash System Sump

Table 4-14. Secondary Containment Liner in Cells and Caves in the RPP-WTP

Cell/Cave	Cell Dimensions (L×W) (feet)	Tanks in Cell/Cave	Volume of Largest Tank in Cell/Cave (gallons)	Secondary Containment Liner Height (feet)	
				Calculated	Projected
Pretreatment Plant					
001	117.0 × 159.0	V-11020 A, V-11020B, V-11020 C, V-11020 D, V-11020 E, V-11020 F	445,655	6.8	7.0
002	37.1 × 37.5	V11001B	118,760	12.6	13.5
003	96.4 × 37.5	V-12001B, V-12001F	93,376	5.6	6.0
004	96.4 × 41.5	V-12001A, V-12001C, V-12001D	93,376	5.3	5.5
005	62.5 × 37.5	V-12010B	57,626	5.5	5.5
006	62.5 × 41.5	V-12001E	93,376	6.6	7.0
007	81.5 × 37.5	V-13001	66,507	4.7	5.5
008	81.5 × 41.5	V-12011A, V-12011B	26,577	2.7	3.5
009	70.5 × 37.5	V-15018, V-15013,	89,492	6.4	6.5
010	69.5 × 40.5	V-12016A, V-12016B	84,096	6.4	6.5
011C	See Note 1	G12001A, G12001B, G12002A, G12002B	676	See Note 1	See Note 1
011U	70.0 × 33.0	V-15009	105,739	See Note 1	See Note 1
012	37.1 × 41.5	V-11001A	118,760	11.5	12.5
Maintenance Cave	26.0 × 9.0	V14001	1,950	2.0	3.0
LAW Pretreatment Plant					
LAW Melter Feed Evaporator	31.0 × 30.0	V41001A	129,725	19.8	21.0
LAW Melter Feed Evaporator	30.0 × 30.0	V41001B	129,725	20.4	21.5
Tc IX	66.5 × 31.0	V43110A, V43110B, V43110C	35,898	4.4	4.5
Tc IX	66.5 × 30.0	V45013, V45018	51,562	5.9	6.0
Effluent Receipt	43.0 x 30.0	V43001A	67,858	8.8	9.0
Feed Receipt	43.0 x 31.0	V43001B	67,858	8.8	9.0
Condensate Collection	143.0 x 69.0	V45028A, V45028B, V45028C	357,295	7.6 (See Note 2)	8.0

Table 4-14. Secondary Containment Liner in Cells and Caves in the RPP-WTP

Cell/Cave	Cell Dimensions (L×W) (feet)	Tanks in Cell/Cave	Volume of Largest Tank in Cell/Cave (gallons)	Secondary Containment Liner Height (feet)	
				Calculated	Projected
LAW Vitrification Plant					
L-186 (Melter 1 Process Cell)	48 × 38	V21001	14,000	1.4	1.5
L-187 (Melter 2 Process Cell)	48 × 38	V21002	14,000	1.4	1.5
L-188 (Melter 3 Process Cell)	48 × 38	V21003	14,000	1.4	1.5
L-189 (Effluent Cell)	38 × 31	V25001, V25003	24,000	3.7	4.0
L-333 (Caustic Scrub Blowdown Collection Room)	31 × 27	V22001	17,000	3.3	3.5
L-007 (C3/C5 Drain Tank Room)	18 × 18	V25002	16,750	11.3	11.5
HLW Vitrification Plant					
H-004 (Secondary Offgas Scrubber)	40.5 × 21.5 (length irregular)	V35001	11,600	2.3	2.5
H-153 (No. 1 - Tank Area)	50.75 × 12.3	V31101, V31102	3,820	0.05 (within curbed area)	1.0
H-059 (Canister Decontamination Cell)	8 × 23.5	V33002	2,508	2.1	2.5
H-035 (SBS Drain Collection Cell No. 1)	12.5 × 16.5	V32101	3,700	3.9	4.0
H-027 (Wet Process Cell)	18 × 64	V35003	13,600	2.3	2.5
H-027 (Wet Process Cell)	17 × 18	V35009	3,200	1.7	2.0

Notes:

1 The floor and four walls in this cell will be fully lined.
2 Height of liner includes additional capacity to account for a 25 year, 24 hour rainfall as required by WAC 173-303-640(4)(e)(i)(B).

Table 4-15. Containment Buildings Summary

Location	Demensions (L × W × H) (feet)
Pretreatment Plant	
Pretreatment C3 Workshop Containment Building	34 × 124 × 17
Pretreatment Maintenance Containment Building	23 × 92 × 21
LAW Vitrification Plant	
LAW LSM Gallery Containment Building	151 × 62 × 25
ILAW Container Finishing Containment Building	98 × 31 × 25
ILAW Container Fixative Containment Building	20 × 65 × 20
LAW Vitrification Plant C3 Workshop Containment Building	35 × 40 × 20
HLW Vitrification Plant	
HLW Melter Containment Building	35 × 107 × 49
IHLW Container Weld Containment Building	140 × 18 × 48
IHLW Container Decontamination Building	10 × 80 × 58
HLW Vitrification Plant C3 Workshop Containment Building	27 × 66 × 19

CONTENTS

5. Releases From Solid Waste Management Units [E] 5-1

5. Releases From Solid Waste Management Units [E]

Virgin soils from the excavation of nearby ground trenches are located on the site footprint. There are no solid waste management units known or suspected to be present on this property.

Information regarding solid waste management units, and known or suspected releases of dangerous waste, at other locations on the Hanford Site is provided in Section 2.5 of the *Hanford Facility Dangerous Waste Permit Application, General Information Portion* (DOE-RL 1998).

CONTENTS

6. Procedures To Prevent Hazards [F] 6-1

6.1. Security [F-1] 6-1
6.1.1. Security Procedures and Equipment [F-1a] 6-1
6.1.2. Waiver [F-1b] 6-2

6.2. Inspection Plan [F-2] 6-2
6.2.1. General Inspection Requirements [F-2a] 6-2
6.2.2. Inspection Log [F-2b] 6-3
6.2.3. Schedule for Remedial Action for Problems Revealed [F-2c] 6-4
6.2.4. Specific Process or Waste Type Inspection Requirements [F-2d] 6-4

6.3. Preparedness and Prevention Requirements [F-3] 6-8
6.3.1. Equipment Requirements [F-3a] 6-8
6.3.2. Aisle Space Requirement [F-3b] 6-10

6.4. Preventive Procedures, Structures, and Equipment [F-4] 6-10
6.4.1. Unloading/Loading Operations [F-4a] 6-10
6.4.2. Runoff [F-4b] 6-10
6.4.3. Contamination of Water Supplies [F-4c] 6-10
6.4.4. Equipment and Power Failures [F-4d] 6-11
6.4.5. Personal Protection Equipment [F-4e] 6-11

6.5. Prevention of Reaction of Ignitable, Reactive, and/or Incompatible Waste [F-5] 6-11

Appendix 6A Inspection Schedules 6A-i

TABLES

Table 6A-1. Example RPP-WTP General Inspection Schedule 6A-2
Table 6A-2. Example Container and Container Storage Area Inspection Schedules 6A-3
Table 6A-3. Example Tank Systems Inspection Schedule 6A-6
Table 6A-4. Example Secondary Containment Inspection Schedule 6A-13
Table 6A-5. Example Cathodic Protection Inspection Schedule 6A-18
Table 6A-6. Example Ignitable or Reactive Wastes Inspection Schedule 6A-19
Table 6A-7. Example Miscellaneous Unit Inspection Schedule 6A-20
Table 6A-8. Example Containment Buildings Inspection Schedule 6A-21

6. Procedures To Prevent Hazards [F]

This chapter addresses hazard prevention at the River Protection Project - Waste Treatment Plant (RPP-WTP). It covers the following topics: security; preparedness and prevention requirements; preventive procedures, structures, and equipment; and prevention of reaction of the ignitable, reactive, and incompatible waste at the RPP-WTP.

Information is presented in two formats: narrative and table. See Appendix 6A for inspection tables.

6.1. Security [F-1]

This section describes RPP-WTP security procedures and equipment. Hanford Site security measures are discussed in the *Hanford Facility Dangerous Waste Permit Application, General Information Portion* (DOE-RL 1998).

6.1.1. Security Procedures and Equipment [F-1a]

The following sections describe the barrier and warning signs that support security and control access to the RPP-WTP.

6.1.1.1. 24-Hour Surveillance System

The entire Hanford Site is a controlled-access area. For surveillance information, refer to the *Hanford Facility Dangerous Waste Permit Application, General Information Portion*.

6.1.1.2. Barrier and Means to Control Entry

A fence of sufficient height and construction to prevent accidental access of livestock, wildlife, and humans will surround the RPP-WTP perimeter. Access to the RPP-WTP administration building will be through a gate in the perimeter fence that will be typically open. Visitors must check in at the administration building and will be escorted.

Additional fencing will further restrict access to the RPP-WTP. Personnel entry to the process areas will be by foot, and will be restricted. Persons desiring entry to the RPP-WTP will have the appropriate facility-specific training, as defined in the *River Protection Project - Waste Treatment Plant Dangerous Waste Training Plan* provided as Appendix 8A of this DWPA, or be escorted. The truck and service entrance to the process area will be through a controlled gate. Plans include guardhouse personnel to control ingress, and egress for delivery of supplies, materials, and chemicals. Egress from the process area will be by the same gate. This gate will normally be kept locked and will be controlled by the guardhouse personnel. There are three other gates to the RPP-WTP, all of which are normally locked. See the map, in Appendix 2A of this dangerous waste permit application (DWPA), for further information regarding barriers and vehicular access. As the design of the RPP-WTP progresses, additional information will be provided, including more details regarding barriers and means of controlling entry.

6.1.1.3. Warning Signs [F-1a(2)]

Consistent with the Hanford dangerous waste permit (DOE-RL 1998) warning signs, written in English stating "DANGER - UNAUTHORIZED PERSONNEL KEEP OUT" (or an equivalent legend), legible from a distance of at least 25 feet and visible from any angle of approach to the RPP-WTP, will be posted at area boundaries within the Hanford Site and active portions of the RPP-WTP such as:

- Around the perimeter of the RPP-WTP fenced areas
- On each entrance, gate, and other access points to portions of the RPP-WTP facility actively managing dangerous waste
- On entrances to rooms, and other enclosed areas within the plant, that could contain dangerous or mixed waste

Points of access into waste handling and storage areas will have clearly marked warnings for radiation exposure and corrosivity, the major health risks associated with the waste. Access points into these areas will be strictly controlled. In addition, signs will be posted at the main site access entrance, instructing visitors to report to the RPP-WTP administration building to gain access to the RPP-WTP (WAC 173-303-310(2)(a)).

6.1.2. Waiver [F-1b]

No waivers of the security procedures and equipment requirements for the RPP-WTP are requested.

6.2. Inspection Plan [F-2]

The following sections describe the RPP-WTP dangerous waste inspection plan. The objective of the plan is to prevent malfunctions, deterioration, operator errors, and discharges that may cause or lead to the release of dangerous waste or mixed waste constituents. Example inspection schedules, which are part of the inspection plan, are presented as tables in Appendix 6A. Each table addresses a particular dangerous waste management unit, or group of units, such as tanks. Within each management unit table, the inspections are presented by system, and are further broken down by individual component in each system (as described in Chapter 4).

6.2.1. General Inspection Requirements [F-2a]

This section describes general inspection requirements for the following: process equipment, instrumentation, monitors, controls, and security devices; and preparedness and prevention equipment used to help prevent, detect, or respond to environmental or human health hazards related to dangerous waste handling, treatment, and storage at the RPP-WTP. The general inspection schedule is provided in Table 6A-1.

Monitoring via instrumentation will be used to perform remote inspections in areas of high radioactivity, including the pretreatment areas, the LAW vitrification area, and the HLW vitrification area. Due to the radioactive nature of the waste and consistent with ALARA principles, monitoring by instrumentation will be the primary means of fulfilling the inspection requirements in these areas. Instruments, such as those used for overfill detection, will be connected to the Distributed Control System (DCS), the computer system that continuously monitors the instruments' data and immediately alerts control room personnel when a reading is outside predetermined limits. Control personnel will be alerted (in real time) by visual

and auditory alarms in the control room. The monitoring system will also provide trending of selected monitoring data, graphics, and equipment summary displays.

A preventive maintenance recall system will be employed to direct preventive maintenance activities and function testing at the RPP-WTP.

6.2.1.1. Items to be Inspected [F2a(1)]

Examples of the types of items to be inspected are listed in the inspection schedule tables. As the design of the RPP-WTP progresses, additional information will be provided in the tables. Information to be provided includes the component numbers (where applicable).

6.2.1.2. Types of Problems to Look for During Inspections [F-2a(2)]

The example inspection tables in Appendix 6A include a column titled "inspections". This column specifies the type of inspection activities to be performed (such as verifying the operability of equipment and problems to look for) for each inspected item.

6.2.1.3. Frequency of Inspections [F-2a(3)]

In the example inspection tables in Appendix 6A, the column titled "frequency" provides the suggested frequency of inspection for each item. Inspection frequencies are based on the following:

- Regulatory requirements where specified
- Rate of possible deterioration of equipment
- Probability of a release to the environment
- Manufacturer's specifications
- Integrity assessments
- Operating experience and knowledge

6.2.1.4. Schedule Location [F-2a(4)]

The RPP-WTP inspection plan and schedules will be located at the Hanford Site, or another approved location, and will be retained for the operating life of the RPP-WTP.

6.2.1.5. Employee Positions Responsible for Conducting Inspections [F-2a(5)]

Managers, advanced general workers, or general workers may perform inspections, and will be trained as required (see *River Protection Project - Waste Treatment Plant Dangerous Waste Training Plan* provided as Appendix 8A of this DWPA) to ensure that consistent, effective inspections are conducted.

6.2.2. Inspection Log [F-2b]

Records of inspections (the inspection log) will include the date and time of inspection, the name of the inspector, a notation of the observations made, and an account of spills or discharges. The date and nature of repairs or remedial actions taken will be placed in the operating record. The inspection log will be stored in the RPP-WTP operating record for at least 5 years from the date of inspection.

Computers will be used for recording inspections in the RPP-WTP where it is sensible, cost-effective, and/or consistent with ALARA practices. Whenever possible, schedule requirements for dangerous waste inspections will be incorporated into the procedures and operating documentation for normal operations. The procedures and operating requirements that satisfy compliance with WAC 173-303 (including inspection requirements) will be identified so that they are distinguishable within the larger universe of facility requirements.

6.2.3. Schedule for Remedial Action for Problems Revealed [F-2c]

When an inspection identifies an imminent hazard to human health or the environment, remedial action will be taken as soon as practicable by facility management to implement the *River Protection Project-Waste Treatment Plant Emergency Management Plan*, provided in Appendix 7A of this DWPA.

Because of the radioactive component of the waste being managed at the RPP-WTP, response actions to unplanned releases may require additional response time. The plant's policy is to begin investigation within 24 hours, upon detection of any unplanned release in the plant that does not pose a threat to human health or the environment.

Depending upon the volume of the release and the characterization of the released contents, the sump cleanup may be completed within 24 hours after the initial investigation period. However, the time required to remove the contents will depend on several factors such as sampling activities, analytical turnaround time, and volume. RPP-WTP will contact Ecology if the sump contents cannot be removed within 24 hours.

6.2.4. Specific Process or Waste Type Inspection Requirements [F-2d]

The following sections describe specific process inspection requirements.

6.2.4.1. Container Inspections [F-2d(1)]

The RPP-WTP will store immobilized low-activity waste, immobilized high-level waste (ILAW and IHLW), and secondary dangerous waste and mixed waste in containers. (The location and design description of the containers and their storage areas will be included in Chapter 4.) Inspections of container storage areas will be performed weekly when waste is in the storage areas. Table 6A-2 provides examples of container and container storage area inspection schedules for ILAW, IHLW, and secondary and miscellaneous waste.

6.2.4.1.1. Immobilized Low-Activity and High-Level Waste Containers

Because of the filled containers' high radioactivity, inspections must be performed remotely. Therefore, each container will be inspected before and after filling, and when it is moved into and out of the container storage areas for ILAW and IHLW. The ILAW and IHLW will be solid (no free liquids), that will be chemically and physically stable (not ignitable or reactive), and will be stored in permanently closed containers.

An unique alphanumeric identifier will be welded onto each container during container manufacture. Deterioration of the lettering is not expected due to the robust nature of these markings and provisions for subsequent handling that will safeguard against damage to the containers or the identification numbers.

A tracking system will record key movements of each immobilized waste container through the facility. The tracked data will include information such as the date waste first enters a container; where the container is placed in storage; and when the container is removed from storage for transport to another RCRA-permitted facility. The system will utilize the containers' alphanumeric identifier as the key-tracking component. For each container of ILAW and IHLW produced, the system will track the following:

- The location of containers in process and storage areas
- Dates that containers have been shipped from the facility, and their destination
- The date that waste was first placed in the container
- The nature of waste in the container, including dangerous waste designation codes, land disposal restriction requirements, and the major health risks associated with the glass waste

As the design of the RPP-WTP progresses, additional information will be provided in this section. Information to be provided includes the following:

- Tracking system format, access, and maintenance
- Controls to assure accurate input
- How records will be maintained
- Remedial actions for problems revealed with canisters or containers

Refer to Supplement 8 for details of the proposed information completion schedule.

6.2.4.1.2. Secondary and Miscellaneous Waste in Containers

Example inspection schedules for secondary and miscellaneous waste container storage areas include checking to ensure a minimum of 30 inches of aisle space is provided between rows of containers.

6.2.4.2. Tank Systems Inspections and Corrective Actions [F-2d(2)]

A description of the tank systems and ancillary equipment at the RPP-WTP is found in Chapter 4. Examples of inspections and frequencies are given in Table 6A-3. Following is a brief discussion of the tank system inspections.

6.2.4.2.1. Overfill Protection

Tank system overfill controls include level-sensing devices, high-level alarms, and automatic feed cutoff mechanisms. Inspection and testing of overfill control equipment are specified in the example inspection schedules.

6.2.4.2.2. Tank Inspection Items

The example tank system inspection schedule includes visual inspection items, monitoring activities, and preventive maintenance and functional testing. Each piece of equipment (or group of equipment) that will be inspected is shown as a line item in the appropriate inspection table. Each inspection item includes a description of problems to look for, and the frequency of the inspection.

The RPP-WTP will rely upon the following to prevent, detect, and respond to hazards:

- Instrumentation that monitors safety-related parameters, such as liquid level, pressure, and temperature
- Regular preventative maintenance and function testing to ensure reliable operation of safety-related instruments
- Safe operating methods, such as batch tracking waste liquor to ensure complete transfers
- Tank system materials and construction methods of a level of quality that exceeds typical standards
- Secondary containment for tank systems provided by stainless steel lined cells for in cells and coated concrete secondary containment for outdoor tanks
- Design and safety expertise
- Procedures and training
- Operating experience

When necessary, provisions will be made to insert remote cameras for inspection. It is not envisioned that this access will be used except where instrumentation will not supply sufficient information.

6.2.4.2.3. Secondary Containment Leak Detectors

Each cell's secondary containment drains to a leak detector that generates an alarm (visual and auditory) to a control room operator. The leak detection system continuously monitors liquids in secondary containment. Should the liquid level go outside the preset level limits, the DCS automatically triggers an alarm that initiates an investigation by operations to determine why the liquid level is outside the normal range.

The leak detectors are inspected routinely to ensure they are functioning properly. The frequency of such function tests or preventative maintenance inspections will be based on the rate of possible deterioration of equipment, the probability of a threat to human health or the environment, manufacturer's specifications, and operational history.

The secondary containment leak detection inspection schedules are presented in Table 6A-4.

6.2.4.2.4. Cathodic Protection

A cathodic protection system will be used to prevent or mitigate underground metal corrosion on outermost pipes in contact with the soil. The otherwise unprotected metal underground pipes will be cathodically protected (see Table 6A-5 for inspections of cathodic protection systems).

6.2.4.2.5. Tank Assessments

Based on recommendations from the initial integrity assessment, a periodic integrity assessment program will be developed for the RPP-WTP waste tanks. Integrity assessment information will be found in Chapter 4.

6.2.4.3. Storage of Ignitable or Reactive Wastes [F-2d(3)]

The RPP-WTP may receive and store ignitable or reactive wastes in tanks. See Chapters 3 and 4 for more information.

Annual inspections of the areas where ignitable or reactive waste are stored in tanks and containers will be conducted by personnel familiar with the Uniform Fire Code, or inspections will be conducted in the presence of the local, state, or federal fire marshal. Annual inspections will be entered into the RPP-WTP operating record and maintained at the RPP-WTP for 5 years (see Table 6A-6 for the inspection schedule for ignitable or reactive wastes).

6.2.4.4. Air Emissions Control and Detection - Inspections, Monitoring, and Corrective Actions (F-2d[4] and [4][a])

6.2.4.4.1. Air Emissions from Process Vents (Subpart AA)

WAC 173-303-690 regulates process vents that are associated with distillation, fractionation, thin-film evaporation, solvent extraction, or air or steam stripping operations that manage hazardous wastes with organic concentrations of at least 10 parts per million by weight. WAC 173-303-690 incorporates the provisions of 40 CFR 264.1031 through 40 CFR 264.1036 by reference. The RPP-WTP does not employ any of these listed devices or processes, therefore, the RPP-WTP will not be subject to regulation under Subpart AA.

6.2.4.4.2. Air Emission Standards for Equipment Leaks (Subpart BB)

WAC 173-303-691 applies to equipment that contains or contacts hazardous wastes with organic concentrations of at least 10 percent by weight. This provision will not apply to the facility because the RPP-WTP will not accept or treat wastes with organic concentrations at or above 10 percent by weight. Compliance with this provision will be documented through analyses of verification samples, as described in section 3.2.2, and confirmation analyses, as described in section 3.2.4.

6.2.4.4.3. Air Emission Standards for Tanks, Impoundments and Containers (Subpart CC)

The requirements for control of emissions from tanks and containers are found in 40 CFR 264.1080 and, in general, require owners and operators to control emissions according to specified standards. There are currently no corresponding provisions in the WAC, although Ecology has proposed to adopt the provisions. The waste management units, including tank systems, that will be used for the management of mixed waste at the RPP-WTP will be exempt from the requirements of Subpart CC by 40 CFR 264.1080(6) and (7). Subpart CC may apply to newly generated wastes, accumulated or stored in containers, that is designated as dangerous waste only, meaning wastes that are not mixed waste. Dangerous-only waste will be managed in accordance with the requirements of Subpart CC, as appropriate.

6.2.4.5. Miscellaneous Unit Inspection

The RPP-WTP melters are considered miscellaneous units per WAC 173-303-680. Remote inspections and monitoring will be performed by instrumentation that will be supplemented by camera(s) because of the high levels of radiation in process areas. Inspections will verify the integrity of monitoring equipment and detect malfunctions, deterioration, leaks, or operator errors that have the potential to release process materials into the facility or the environment. The miscellaneous unit inspection schedule is provided in Table 6A-7.

6.2.4.6. Containment Building Inspection

Containment buildings will be inspected for items listed in Table 6A-8.

The RPP-WTP containment building example inspection schedules include the requirements from 40 CFR 264 Subpart DD. Example inspection schedules for tank systems and miscellaneous units that will be located within containment buildings are found in the example tank inspection schedules, Table 6A-3 and example miscellaneous unit inspections in Table 6A-7.

6.2.4.7. Waste Pile Inspection [F-2d(5)]

Operation of the RPP-WTP does not involve the placement of mixed waste in piles. Therefore, this section is not applicable to the RPP-WTP.

6.2.4.8. Surface Impoundment Inspection [F-2d(6)]

Operation of the RPP-WTP does not involve the placement of mixed waste in a surface impoundment. Therefore, this section is not applicable to the RPP-WTP.

6.2.4.9. Incinerator Inspection [F-2d(7)]

The RPP-WTP does not have a mixed waste incinerator. Therefore, this section is not applicable to the RPP-WTP.

6.2.4.10. Landfill Inspection [F-2d(8)]

Operation of the RPP-WTP does not involve the placement of mixed waste in a landfill. Therefore, this section is not applicable to the RPP-WTP.

6.2.4.11. Land Treatment Facility Inspection [F-2d(9)]

Operation of the RPP-WTP does not involve the land treatment of mixed waste. Therefore, this section is not applicable to the RPP-WTP.

6.3. Preparedness and Prevention Requirements [F-3]

The following sections document the preparedness and prevention measures to be taken at the RPP-WTP.

6.3.1. Equipment Requirements [F-3a]

The following sections describe internal and external communications, and emergency equipment required and located at RPP-WTP.

6.3.1.1. Internal Communications [F-3a(1)]

The onsite communication system at the RPP-WTP provides immediate emergency information to facility personnel, and includes public address and alarm systems. The public address system provides for verbal instruction and communication to RPP-WTP personnel. The internal communication system also notifies personnel of the following local or plant-wide alarm-activated emergency situations: building evacuations,

fire or explosion, radioactive discharges, and high airborne contamination. The *Emergency Management Plan* (Appendix 7A) provides additional information on the response activities.

6.3.1.2. External Communications [F-3a(2)]

The RPP-WTP is equipped with devices for summoning emergency assistance from the Hanford Fire Department, the Hanford Hazardous Materials Response Team, or local emergency response teams, as necessary. External communication will be via a telephone communication system. Telephones will be available at numerous locations throughout the facility for use by staff. Under no circumstances will only one staff member be onsite at a time. In addition, the following external communication systems will be available for summoning emergency response organizations:

- Fire alarm pull boxes - Connected to a system monitored around the clock.
- Telephone number 911 - Point of coordination for the Hanford Site. Upon notification, the Hanford Patrol Operations Center notifies or dispatches required emergency responders.
- Telephone number 373-3800 - Single point of coordination for the BED. This number can be dialed from any Hanford Site telephone.
- Emergency telephone - Three points of contact (the control room, the backup Central Control Room, and the emergency control station) from the RPP-WTP to the 200 East Area Emergency Control Center (2750-E Building).
- Priority message system (Management Bulletin) - A network of fax machines used to disseminate information to personnel.
- Two-way radio systems - Systems and frequencies available to summon emergency services or any other assistance needed to deal with emergencies.
- Crash telephone system – A Hanford Site emergency notification system to instruct personnel on-site, in the event of an event requiring protective actions.

6.3.1.3. Emergency Equipment [F-3a(3)]

Portable fire extinguishers, fire control equipment, spill control equipment, and decontamination equipment are available to personnel at the RPP-WTP. A list of emergency and decontamination equipment is provided in the *Emergency Management Plan* (Appendix 7A).

6.3.1.4. Water for Fire Control [F-3a(4)]

The primary water supply for fire protection will be provided from the 200 East Area raw water distribution system. The raw water distribution system is sized to provide adequate volume and pressure to supply fire fighting needs.

As the design of the RPP-WTP progresses, additional information will be provided in this section. Information to be provided will include water volume and pressure to adequately supply fire control equipment. Refer to Supplement 8 for details of the proposed information completion schedule.

6.3.2. Aisle Space Requirement [F-3b]

Sufficient aisle space will be maintained throughout the facility to allow access of personnel and equipment responding to fires, spills, or other emergencies.

The basis for a variance from aisle space requirements for IHLW and ILAW container storage areas is demonstrated in Chapter 4. Miscellaneous and secondary wastes stored in containers will meet the 30 inch minimum aisle space requirement.

6.4. Preventive Procedures, Structures, and Equipment [F-4]

The following sections describe preventive procedures, structures, and equipment. Refer to Chapter 4 for detailed information on tank feed transfer and overfill protection equipment.

6.4.1. Unloading/Loading Operations [F-4a]

Tank waste to be treated will be received into the RPP-WTP from the DST tank through a pipeline with secondary containment and a leak detection system. The RPP-WTP will not receive waste in containers for treatment.

The filled ILAW and IHLW containers and canisters will be loaded for transport using special shielding and heavy lifting equipment. The immobilized waste will present no hazards from spills, leaks, run-off, or chemical exposures to personnel from the dangerous waste constituents because the waste will be solid (contain no free liquids) and the containers will be permanently sealed.

As the design of the RPP-WTP progresses, additional information will be provided in this section. Information to be provided includes loading areas for containers storing waste other than the immobilized waste. Refer to Supplement 8 for details of the proposed information completion schedule.

6.4.2. Runoff [F-4b]

Waste stored and treated inside the plants can not contact precipitation and therefore, cannot contaminate runoff from RPP-WTP structures, nor can precipitation enter secondary containment for the process and storage areas within the plants. Additionally, the three closed tanks located outside the LAW pretreatment plant will be surrounded by a concrete berm lined with a protective coating creating a secondary containment. The secondary containment will collect and hold any leaks, or precipitation until the liquid can be removed. Consequently there will be no contaminated runoff from the outside tanks.

6.4.3. Contamination of Water Supplies [F-4c]

Raw and potable water will be supplied to the RPP-WTP via separate underground lines from the 200 East Area water treatment and distribution system. Backflow preventers or interconnection breaks ensure that contaminated water cannot flow back into the water systems' sources. There will be no connections between potable water and raw water systems, or between the potable water system and piping containing mixed waste.

The facility design includes robust protective features such as thick reinforced concrete and stainless steel secondary containment that prevents contamination of groundwater and drinking water supplies (see Chapter 4 for design information).

6.4.4. Equipment and Power Failures [F-4d]

Provisions will be in place to ensure that backup power is provided for equipment critical to operations. The procedures and structures such as secondary containment and equipment, including uninterruptible power supplies (UPS) used to mitigate the effects of equipment failure and power outages, will be described in the following sections. The inspection schedule for emergency power equipment and systems is found in Table 6A-1.

As the design of the RPP-WTP progresses, additional information will be provided in this section. Information to be provided includes procedures, structures, UPS systems, backup systems, and other equipment used to mitigate the effects of equipment failure and power outages. Refer to Supplement 8 for details of the proposed information completion schedule.

6.4.5. Personal Protection Equipment [F-4e]

Facility design, operating practices, and administrative controls are the primary means of preventing personnel exposure to dangerous and mixed waste. The following practices, structures, and equipment are intended to minimize personnel exposure to chemicals, radioactive contamination, and radiation exposure:

- Secondary containment for liquids
- Remote operation and viewing
- Active ventilation that moves air from uncontaminated zones to progressively more contaminated zones
- Waste cutoff systems that automatically keep operations in a safe condition
- Offices, control rooms, change rooms, and lunchrooms are situated to minimize casual exposure of personnel

Before the start of an operation that might expose employees to the risk of injury or illness, a review of the operation will be performed to ensure the appropriate protective gear is selected. Personnel will be instructed to wear Personal Protective Equipment (PPE) in accordance with training, posting, and instructions. The inspection schedule for PPE is found in Table 6A-1.

6.5. Prevention of Reaction of Ignitable, Reactive, and/or Incompatible Waste [F-5]

The RPP-WTP may receive waste feed that is designated as ignitable or reactive; furthermore, the RPP-WTP may store, in containers, secondary waste that is designated as ignitable, reactive, or incompatible (see Chapter 3 and the Waste Analysis Plan).

Process knowledge, administrative controls, and the active ventilation system prevent the formation or release of vapors that could harm human health or the environment.

Chapter 7

CONTENTS

7. Contingency Plan [G] 7-1

Appendix 7A RPP–WTP Emergency Management Plan 7A-i

7. Contingency Plan [G]

The contingency plan requirements provided in *Washington Administrative Code* (WAC) 173-303-350, "Contingency Plan and Emergency Procedures", are satisfied by the following documents:

- *River Protection Project - Waste Treatment Plant Emergency Management Plan* (Appendix 7A of this document)
- *Hanford Emergency Management Plan* (DOE-RL 1999)

To reduce duplication and simplify the documentation requirements for the River Protection Project - Waste Treatment Plant (RPP-WTP), the emergency management plan (Appendix 7A) will satisfy the requirements of RPP-WTP-specific contingency plan required by WAC 173-303-350(2). The emergency management plan complies with the contingency planning requirements of WAC 173-303, "Dangerous Waste Regulations".

The emergency plans cited above satisfy a broad range of regulatory requirements, in addition to satisfying WAC 173-303. Prior to completing the RPP-WTP construction, the contents of the contingency plan will be modified to include radiation safety requirements. This contingency plan will be supported by procedures that specify how the planning, preparedness, and response principles that are described in the plan will be implemented.

Revisions made to portions of the emergency management plan documents that are not governed by the requirements of WAC 173-303 will not be considered modifications of the RPP-WTP dangerous waste permit application.

Chapter 8

CONTENTS

8. Personnel Training [H] 8-1
Appendix 8A RPP-WTP Dangerous Waste Training Plan 8A-i

8. Personnel Training [H]

The River Protection Project - Waste Treatment Plant (RPP-WTP) training program establishes the vision, mission, and policy for training and development for the RPP-WTP. The training program is designed to comply with applicable federal and state training requirements. The training program incorporates the requirements of *Washington Administrative Code* (WAC) 173-303-330, "Personnel Training", for the development of a written dangerous waste training plan. The training program is designed to prepare personnel to manage and maintain the RPP-WTP in a safe, effective, efficient, and environmentally sound manner. In addition to preparing personnel to manage and maintain the RPP-WTP under normal conditions, the training program ensures that personnel are prepared to respond in a prompt and effective manner should non-routine or emergency conditions occur.

The dangerous waste training plan (provided in Appendix 8A) is only part of the RPP-WTP training program, and is designed to specifically address dangerous waste training requirements in the operations phase of the RPP-WTP project.

The information submitted in Appendix A makes up only part of the training plan required by the Dangerous Waste Regulations. The entire training plan will be maintained in the operating record. In addition to the material required in the permit application, the entire training plan will contain such additional information as (for each job title): name of employee filling the position, the requisite skills, education other qualifications, and duties of each position related to dangerous waste management at the facility. Also, records documenting that employees have received the appropriate training will be maintained in the operating record.

Chapter 9

CONTENTS

9. Exposure Information Report.....9-1

9. Exposure Information Report

The River Protection Project - Waste Treatment Plant will not store, treat or dispose of hazardous waste in either a surface impoundment or a landfill. These terms are defined in the *Resource Conservation and Recovery Act of 1976*, Section 3019, "Exposure Information and Health Assessments" and reiterated in 40 CFR 270.10, *General Application Requirements*. Therefore, exposure information is not required.

CONTENTS

10. Waste Minimization/Pollution Prevention [D-9] 10-1

10. Waste Minimization/Pollution Prevention [D-9]

To fulfill the requirements of *Standards for Owners and Operators of Hazardous Waste Treatment, Storage, and Disposal Facilities*, "Operating Record" (40 CFR 264.73[b][9]), a form certifying that the River Protection Project - Waste Treatment Plant (RPP-WTP) has a waste minimization and pollution prevention program in place will be entered annually into the RPP-WTP operating record.

CONTENTS

11. Closure and Financial Assurance [I and I-1] 11-1

11.1. Introduction 11-1
11.1.1. Closure Plan Overview 11-1
11.1.2. Closure Plan Revisions 11-3

11.2. Closure Performance Standard [I-1a] 11-3
11.2.1. Closure Standards for Soils, Groundwater, Surface Water, and Air [I-1a(1)] 11-9
11.2.2. Closure Standards for Decontamination of Structures and Equipment [I-1a(2)] 11-11
11.2.3. Closure Standards for Tank Systems 11-12
11.2.4. Closure Standards for Container Storage Areas 11-13
11.2.5. Closure Standards for Containment Buildings 11-14
11.2.6. Closure Standards for Miscellaneous Units 11-14

11.3. Closure Activities [I-1b] 11-15
11.3.1. Maximum Extent of Operations [I-1b(1)] 11-19
11.3.2. Removing Dangerous Waste [I-1b(2)] 11-20
11.3.3. Decontaminating Structures, Equipment, and Soils [I-1b(3)] 11-21
11.3.4. Sampling and Analysis to Identify Extent of Decontamination/Removal and to Verify Achievement of Closure Standard [I-1b(4)] 11-26

11.4. Other Activities [I-1b(5)] 11-32
11.4.1. Certification of Closure 11-32
11.4.2. Run-on and Runoff Control 11-33
11.4.3. Equipment Reuse 11-33

11.5. Maximum Waste Inventory [I-1c] 11-34

11.6. Closure of Tank, Container Storage, Containment Building and Miscellaneous Units [I-1d] 11-34
11.6.1. Closure of Tank Systems 11-35
11.6.2. Closure of Container Storage Areas 11-36
11.6.3. Closure of Containment Building Units 11-38
11.6.4. Closure of Miscellaneous Units 11-38

11.7. Schedule for Closure [I-1f] 11-39

11.8. Extension for Closure Time [I-1g] 11-39

11.9. Closure Cost Estimate [I-1h] 11-41

Appendix 11A Tables and Figures Identifying Dangerous Waste Management Units 11A-i

FIGURES

Figure 11-1. Closure Strategy Flowchart for Tank Systems 11-42

Figure 11-2. Closure Strategy for Container Storage, Containment Building, Miscellaneous Unit and Tank System Containment Areas 11-43

Figure 11-3. Closure Strategy Flowchart for Soils/Groundwater 11-44

Figure 11-4. RPP-WTP Permitting, Deactivation and Closure 11-45

Figure 11-5. Sample Clean Debris Surface Checklist 11-46

Figure 11-6. Example Closure Certification Statement 11-47

Figure 11-7. Closure Schedule for RPP-WTP 11-48
Figure 11A-1. Site Layout Showing Stand-Alone Waste Management Units 11A-17
Figure 11A-2. Pretreatment Plant (Elevation -50') 11A-18
Figure 11A-3. Pretreatment Plant (Elevation 0') 11A-19
Figure 11A-4. Pretreatment Plant (Elevation 20') 11A-20
Figure 11A-5. Pretreatment Plant (Elevation 56') 11A-21
Figure 11A-6. LAW Pretreatment Plant (Elevation -30') 11A-22
Figure 11A-7. LAW Pretreatment Plant (Elevation 0') 11A-23
Figure 11A-8. LAW Pretreatment Plant (Elevation 25') 11A-24
Figure 11A-9. LAW Pretreatment Plant (Elevation 55') 11A-25
Figure 11A-10. LAW Vitrification Plant (Elevation -21') 11A-26
Figure 11A-11. LAW Vitrification Plant (Elevation 3') 11A-27
Figure 11A-12. LAW Vitrification Plant (Elevation 19'-3") 11A-28
Figure 11A-13. LAW Vitrification Plant (Elevation 28') 11A-29
Figure 11A-14. HLW Vitrification Plant (Elevation -16') 11A-30
Figure 11A-15. HLW Vitrification Plant (Elevation 0') 11A-31
Figure 11A-16. HLW Vitrification Plant (Elevation 11') 11A-32
Figure 11A-17. HLW Vitrification Plant (Elevation 30') 11A-33

TABLES

Table 11-1. Maximum Waste Inventory 11-49
Table 11-2. Clean Closure Performance Standards and Activities 11-50
Table 11A-1. Container Storage Areas Summary 11A-1
Table 11A-2. Containment Buildings Summary 11A-2
Table 11A-3. Pretreatment Plant Tank Systems 11A-3
Table 11A-4. LAW Pretreatment Plant Tank Systems 11A-8
Table 11A-5. LAW Vitrification Plant Tank Systems 11A-11
Table 11A-6. HLW Vitrification Plant Tank Systems 11A-13
Table 11A-7. Secondary Containment Liner in Cells and Caves in the RPP-WTP 11A-15

11. Closure and Financial Assurance [I and I-1]

This chapter of the dangerous waste permit application is the closure plan for the River Protection Project-Waste Treatment Plant (RPP-WTP). This closure plan describes activities necessary to close the RPP-WTP. The procedures and estimated times for completing these activities are discussed in this plan.

This closure plan is provided in compliance with the applicable requirements of the *Washington Administrative Code* (WAC) 173-303-610, -620, and -806. The closure plan is specifically required to be included in the permit application by WAC 173-303-806(4)(a)(xiii). This plan is also intended to demonstrate compliance with Conditions II.J. and II.K. of the *Dangerous Waste Portion of the Resource Conservation and Recovery Act Permit for the Treatment Storage and Disposal of Dangerous Waste at the Hanford Facility* (Washington State Department of Ecology Permit WA 7890008967) (the Hanford "RCRA Permit", as specified in the Definitions, Section i. in the Permit).

With several exceptions, this plan follows the format of a typical closure plan as outlined in the *Dangerous Waste Permit Application Requirements for Facilities Which Store and/or Treat Dangerous Wastes in Tank Systems and Containers* (Ecology Publication 95-402). The exceptions are exclusion of sections that do not apply to the RPP-WTP (financial assurance, liability, "already closed disposal unit", and post-closure requirements) and addition of new sections not addressed in the guidance (closure of tank, container storage and containment building units).

11.1. Introduction

This closure plan identifies the necessary steps and procedures for removal of dangerous and mixed waste, and decontamination of the permitted units, ancillary equipment, and containment systems, to completely close the RPP-WTP at any point in its active life. The closure activities will be consistent with the requirements of RPP-WTP deactivation, decontamination and decommissioning plans. These plans are to be prepared under separate authorities and will be revised, or the closure plan will be revised, as necessary to maintain consistency between the plans. Deactivation is discussed further in sections 11.3.2 and 11.7.

The decontamination and decommissioning plan will be prepared when plans for closure are finalized, and will be integrated with the revised closure plan to be submitted to Ecology for review and approval, as described in the following section. Deactivation is considered to be part of the first phase of the closure plan, even though deactivation may be completed some time before closure is completed.

Treatment, storage, and disposal (TSD) facilities located at the Hanford Site are exempt from the closure cost estimate requirements of WAC 173-303-620, in accordance with Condition II.H.3 of the Hanford RCRA Permit. However, Condition II.H.1 of the Hanford RCRA Permit requires submittal of an annual report updating projections of anticipated costs for closure (see section 11.9).

11.1.1. Closure Plan Overview

Mixed waste will be handled and stored in the following areas of the RPP-WTP:

- Pretreatment plant building (tank systems, container storage areas and containment buildings)
- LAW pretreatment plant building (tank systems and container storage areas)

- Waste transfer lines from the US Department of Energy (DOE), Double-Shell Tank (DST) System Unit, to the RPP-WTP pretreatment building (tank system ancillary equipment)

- Effluent transfer lines from the RPP-WTP pretreatment building, to the Liquid Effluent Retention Facility (LERF) and the Effluent Treatment Facility (ETF) (tank system ancillary equipment)

- Low activity waste (LAW) vitrification building (miscellaneous units, tank systems, container storage areas and containment buildings)

- High level waste (HLW) vitrification building (miscellaneous unit, tank systems, container storage areas and containment buildings)

- RPP-WTP Central Waste Storage area and two melter storage buildings (container storage areas).

Dangerous (non-mixed) waste will be stored in the dangerous waste container storage building. This unit is a separate structure located on the west side of the pretreatment building.

The permitted mixed and dangerous waste management units in the RPP-WTP are identified in Appendix 11A figures and tables. The RPP-WTP dangerous and mixed waste management units, including ancillary equipment, secondary containment areas, supporting structures and underlying soil, are addressed in this closure plan. The RPP-WTP closure will be coordinated with the DST System unit and LERF/ETF closure plans to address the connecting pipelines.

The closure plan indicates several potential Hanford treatment, storage and disposal units that may be used to manage wastes generated during closure of the RPP-WTP. These identifications are preliminary, and are subject to change as the Hanford facility is developed, and as the Hanford RCRA Permit is modified in the future.

The remainder of the closure plan provides the following information:

- Section 11.2 of the closure plan identifies the regulatory standards that apply to closure, and the processes to be used for developing specific cleanup standards that will be achieved during closure.

- Section 11.3 describes the overall approach for removing the waste inventory, flushing and decontamination operations, removing and disposing of contaminated equipment and residues, and inspections and sampling to verify clean closure.

- Section 11.4 describes other activities including certification of completion of closure, control of run-on and runoff during closure, and equipment reuse.

- Section 11.5 provides the maximum waste inventory.

- Section 11.6 provides descriptions of the closure procedures for each type of dangerous waste management unit.

- Section 11.7 provides the schedule for closure.

- Section 11.8 provides the demonstration required to support a request to extend the standard 90 and 180 day waste removal and closure completion time limits, as specified in WAC 173-303-610(4)(a) and (b).

- Section 11.9 discusses the annual submittal of updated anticipated costs of closure, as required by Condition II.H.1. of the Hanford RCRA Permit.

11.1.2. Closure Plan Revisions

This closure plan will be revised and submitted to the Washington State Department of Ecology (Ecology) for review and approval if there are changes in the RPP-WTP operating plans or design that affect this closure plan, or if unexpected events during closure activities require a modification. Addition of new dangerous wastes or dangerous constituents to the wastes treated or stored at the RPP-WTP may also warrant revision of the closure plan.

The closure plan will be revised, if efforts to achieve the clean closure standards for the RPP-WTP structures or soil are unsuccessful. The "modified closure" approach may be followed, as provided in Condition II.K.3. of the Hanford RCRA Permit, if feasible. The plant, or portions of the plant, will be closed as a landfill as provided in Condition II.K.4. of the Hanford RCRA Permit, and a postclosure plan will be developed and submitted to Ecology for review and approval, if necessary. The revised closure plan will be accompanied by a written request for modification of the permit.

The design life of the RPP-WTP is 40 years after the initiation of waste treatment operations. The actual operating life of the plant may change depending on expansion in treatment capacity, improvements in treatment technology, or many other factors. The closure plan will be revised as appropriate to incorporate future advances in decontamination technology, changes in plant capacity, or other factors that may affect the closure of the plant.

The closure plan will also be revised before the start of closure work, based on relevant information from the operational history of the RPP-WTP. The final revised closure plan will provide the necessary final detailed decontamination schedule and procedures, sampling and analysis plan, health and safety plan, the interface with DST System unit and LERF/ETF closure plans, and additional information dependent on future conditions, as indicated in the following pages.

Additional information will be provided in this plan and a revised closure plan will be submitted to Ecology for review and approval, prior to the commencement of operations. Specific items of information to be provided before operations begin are identified in several of the following sections of this closure plan, at the end of the pertinent subsections. Refer to Supplement 8 for details of the completion schedule.

11.2. Closure Performance Standard [I-1a]

The RPP-WTP will be closed in accordance with the requirements of Conditions II.J. and II.K. of the Hanford RCRA Permit.

Clean closure requires decontamination or removal and disposal of dangerous waste, waste residues, contaminated equipment, soil, or other material, in accordance with the clean closure performance standards of WAC 173-303-610(2). Clean closure as described in this closure plan will accomplish the following:

- Minimize the need for future maintenance

- Control, minimize, or eliminate, to the extent necessary to protect human health and the environment, postclosure escape of dangerous waste, dangerous constituents, leachate, contaminated runoff, or dangerous waste decomposition products, to the ground, surface water, groundwater, or the atmosphere

- Return the land to the appearance and use of the surrounding land areas to the degree possible given the nature of the previous dangerous waste activity

This closure plan proposes to leave clean-closed structures and equipment in place after closure, for potential future operations. The RPP-WTP buildings will not be used for RCRA-regulated TSD activities following clean closure, unless a new permit is issued.

The appearance of the land where the RPP-WTP buildings are located will be consistent with the appearance and future use of the surrounding land areas, after completion of clean closure activities. The RPP-WTP buildings will remain at the site until final disposition is determined and implemented. The RPP-WTP buildings may be demolished, if the buildings will have no future mission. Future land use decisions will be considered during the RPP-WTP decommissioning process. The final decision on building disposition and the appearance and use of the plant area will be integrated with the decisions on disposition of the buildings in the adjacent 200 East Area.

The long term future use of the RPP-WTP site and the adjacent 200 Areas was addressed in the *Final Hanford Comprehensive Land-Use Plan Environmental Impact Statements* (DOE/EIS-0222-F). The Central Plateau as defined in that document includes the U.S. Ecology disposal facility, the DOE Environmental Restoration Disposal Facility (ERDF), and the 200 West and 200 East Areas, as well as the RPP-WTP site. The land use classification attached to the Central Plateau is "industrial (exclusive)", indicating the expected continuing operation of DOE waste management facilities and permanent institutional controls.

Units where mixed or dangerous wastes have been treated or stored will undergo closure activities. Contaminated equipment, debris, and solid decontamination residues generated during the closure of the RPP-WTP will be designated and packaged in accordance with the appropriate regulatory requirements and transferred to a permitted treatment, storage or disposal unit either on or off the Hanford facility. Equipment and debris that are not adequately decontaminated will be treated by encapsulation as necessary to comply with land disposal restriction requirements. Radiologically contaminated liquid decontamination solutions or agents generated during closure activities will be collected, designated, and transferred to a TSD unit(s) at the Hanford facility.

If during closure activities, a product, residual waste, or decontamination fluid is spilled or released, spill response will be initiated as described in Chapter 7 and Appendix 7A, the *River Protection Project – Waste Treatment Plant Emergency Management Plan* (PL-W375-SA00002). The residual waste will be collected, designated and managed appropriately. The use of the spill procedures in the *RPP-WTP Emergency Management Plan* may or may not constitute an implementation of the contingency plan under WAC 173-303-350. Decontamination activities will be performed within secondary containment areas of the RPP-WTP.

Clean Debris Surface

This closure plan proposes use of a "clean debris surface", defined in the following paragraph, as the clean closure performance standard for the visible or inspectable metal (structures and equipment) and concrete (structures) that will remain after closure. Attainment of a clean debris surface can be verified visually in

accordance with the standard in WAC 173-303-140(2)(a), incorporating 40 CFR 268.45, Table 1, footnote 3, which states:

> "Clean debris surface" means the surface, when viewed without magnification, shall be free of all visible contaminated soil and hazardous [dangerous] waste except that residual staining from soil and waste consisting of light shadows, slight streaks, or minor discolorations, and soil and waste in cracks, crevices, and pits may be present provided that such staining and waste and soil in cracks, crevices, and pits shall be limited to no more than 5% of each square inch of surface area.

The clean debris surface standard will be achieved by using the physical and chemical extraction techniques identified in 40 CFR 268.45 Table 1. Several examples of available proven technologies that may be used to achieve the clean debris surface standard are identified in section 11.3.3. This standard will be achieved for inspectable metal surfaces by using water washing, and probably several other technologies, to remove waste and corrosion coatings. Visual verification may be performed by direct worker observation with written inspection documentation, see Figure 11-5, Decontamination Checklist, or by other means such as remote-operated closed circuit television and videotape.

Concrete surfaces above stainless steel cladding are provided with a contamination-resistant protective coating. These surfaces are not part of the secondary containment area or structure for the tank systems, containment building, miscellaneous units or container storage units in the process buildings. The LPP condensate tank system is the only tank system that is designed with a coated concrete secondary containment system. Several container storage units and containment building units also have unclad, coated concrete floors. Protective coatings in good condition may be water-washed or chemically extracted with decontamination solution, then inspected to determine if a clean debris surface is present in the same manner as steel or other metal surfaces. Where there is evidence that a release has occurred, such as confirmation of contamination behind a cladding breach, or identification of damaged or deteriorated protective coating on a concrete floor where a waste release has occurred, and the concrete is adjacent to soil, a contamination investigation will be performed using visual and radiological surveys.

Where the concrete protective coating exhibits more damage than hairline cracks and has lost integrity, the concrete surface under the deteriorated coating will be treated with aggressive physical extraction technologies such as high pressure water or scabbling, to remove at least 0.6 cm of material below the original surface. This approach also applies to uncoated concrete behind or beneath cladding breaches. The exposed concrete will again be inspected to verify that the clean debris surface standard is met. The treatment will be repeated until the clean debris surface standard is met. Closure standards for soil underlying the RPP-WTP are addressed in section 11.2.1.

Designation Limit

Some waste handling equipment metal surfaces cannot be visually inspected, for example, internal pipe and tank surfaces. A component or portions of a component may be flushed with decontamination solutions, if it cannot be decontaminated to meet the clean debris surface standard, or if it cannot be inspected to verify that it meets the standard. The decontamination solution or rinsate will be sampled and analyzed, using methods complying with *Test Methods for Evaluating Solid Waste, Physical Chemical Methods* (US EPA Publication SW-846, as amended), for indicator constituents. Analytical data that meet the criteria defined in WAC 173-303-610(2)(b) will indicate successful decontamination and attainment of the clean closure performance standard. The rinsate analysis criteria are referred to hereafter as the designation limit standard.

Closure Strategy for Tank Systems

The general closure strategy for tank systems is outlined in flowcharts in Figure 11-1 and Figure 11-2. Figure 11-1 shows that internal flushing and decontamination of tanks and ancillary equipment, inspection of the secondary containment area, and sealing of observed cladding breaches will be performed prior to final decontamination efforts. Disposition of solid and liquid treatment residuals is shown only at the initial flushing step (below "flush tanks, piping"), to avoid unnecessary complexity in Figure 11-1. The residuals from the following internal and external decontamination steps are expected to follow the same paths.

The two "more decon?" decision boxes in Figure 11-1 (following determinations that decontamination efforts so far have been inadequate) are the symbols for the key decisions the future closure managers will have to make:

1 Perform additional decontamination in hopes of attaining the clean closure standard

2 Stop decontamination and designate that tank or ancillary equipment as mixed waste to be removed, reduced in size, encapsulated, packaged and disposed.

Figure 11-1 does not show that additional decontamination of external tank or other surfaces may be required to continue on the disposal path (after "remove, dispose as mixed waste"), because such additional decontamination, if required, will be due to radiological dose concerns, not dangerous waste requirements. Figure 11-1 also illustrates the assumption that internal surfaces of tanks and ancillary equipment cannot be adequately or efficiently decontaminated and/or inspected to demonstrate that the clean debris surface standard is met, and that the decontamination solution or rinsate designation limit standard will apply to all internal tank system surfaces. Listed waste codes will be managed through use of the debris standard, through a contained in determination, or other approach described in the Sampling and Analysis Plan identified in Section 11.3.4.

Closure Strategy for Containment Areas

Figure 11-2 shows the strategy for closure of containment areas for tank systems, container storage areas, and containment building units. These steps illustrate the approach for decontaminating stainless steel liners and coated concrete surfaces. The second box, "decon ceilings, walls, floors, as necessary, except suspected liner breaches", is intended to explain that containment area liner breaches may need to be sealed prior to decontamination or removal of equipment, as shown in Figure 11-1 for tank systems. The general procedure for investigating liner breaches or breaks, and decontaminating the concrete behind or below such breaches, is shown in the next seven boxes in Figure 11-2.

Coated concrete containment areas are provided for several units. Examples include the three condensate tanks adjacent to the LAW pretreatment plant, the LAW LSM gallery containment building, the ILAW container finishing line containment building, the ILAW container fixative containment building, and the miscellaneous secondary waste container storage units. The closure strategy for concrete with intact protective coatings is simple. If a release of dangerous or mixed waste in the unit has not been documented in the facility operating record, and no evidence of a release is found during the initial closure inspection, the concrete floor surface will not be physically extracted. In this case, the floor may be immediately inspected to determine whether it meets the clean debris surface standard. Only minor cracking in the protective coating can be accepted in a clean debris surface determination. Chemical extraction by water washing or other acceptable methods may be performed, followed by inspection and documentation of a clean debris surface.

If evidence is found that a release has occurred on a concrete floor where the protective coating has even minor cracking, physical extraction will be required. Physical extraction of the concrete surface will also be required in any area where the protective coating is substantially damaged or deteriorated, e.g., broken or peeling, whether a release is documented or not, followed by inspection to verify and document the presence of a clean debris surface. The inspection will also determine whether the underlying concrete is significantly deteriorated or cracked and has lost integrity. If so, further physical extraction will be required. If a release is documented at such a location, and the concrete at that location is resting on or against soil, a soil investigation will be required. These steps are illustrated in the last two boxes before the final decision box, "Visible Crack or Decomposed Concrete?" in Figure 11-2.

Closure Strategy for Soil

The criteria for determining whether additional soil investigation is required are shown in the final decision box in Figure 11-2. Soil found to be contaminated will be removed to meet risk-based concentration limits, referred to as the soil cleanup limits, to be defined as explained in section 11.2.1. Soil sampling and analyses will be performed after removal to verify compliance with the soil cleanup standard. Figure 11-3 shows the strategy for addressing potential impacts to soil and groundwater.

Compliance with this plan and attainment of the closure standards will be documented by videotape or written inspection records such as the sample checklist in Figure 11-5, the example Closure Certification in Figure 11-6, and other supporting records as discussed in section 11.4.1.

The RPP-WTP is described below as consisting of several basic components, to facilitate discussion of closure activities. Decontamination discussions for these components are provided in sections 11.3.3 and 11.6. These include the following:

- Structures and associated equipment
- Air emission control equipment
- Soil

Equipment and components include, but are not limited to the following:

- Tanks
- Piping
- Valves
- Instruments, cables and connectors
- Melters
- Cranes
- Spray rings
- Sump pumps

- Immobilized waste container and canister transfer, lid welding, and decontamination machinery and tools

- Offgas ducts and solids containment devices such as submerged bed scrubbers, wet electrostatic precipitators and high efficiency particulate air (HEPA) filters

If a component cannot be adequately decontaminated using either the clean debris surface or decontamination solution designation limit standards, or both, it will be removed and packaged using the debris treatment standard for immobilization, encapsulation, and transported to a permitted dangerous waste disposal facility. The most likely disposal facility is one of the Hanford site TSD facilities, since it is unlikely that any debris resulting from closure of the RPP-WTP will be a dangerous waste without also being controlled radioactive waste. Treatment, packaging and characterization of closure wastes will be performed to meet the Hanford Site Solid Waste Acceptance Criteria (HSSWAC) (HNF-EP-0063-5) for the Central Waste Complex (CWC), Low Level Burial Ground (LLBG), or other mixed waste disposal units, to be determined before the start of closure of the RPP-WTP. More specific regulatory requirements for packaging and encapsulation of debris will be developed in the revised closure plan to be submitted before the start of operations.

A list of indicator constituents for closure will be developed based on process knowledge and the risk to human health and the environment, and will be proposed for Ecology review and approval with the final revision of the closure plan. Indicator constituents will be selected from the list of dangerous waste numbers in the *RPP-WTP Dangerous Waste Part A Permit Application*, provided on Form 3 in Chapter 1. Additional considerations in the selection of indicator constituents are the dangerous waste constituents potentially present in measurable quantities. Indicator constituents selected may include radioactive constituents. Radioactive indicator constituents will be regulated under the *Atomic Energy Act* of 1954, as amended (42 United States Code Section 2011).

During closure, the project managers may determine that full decontamination of unit components is not possible or practical. At the time of closure the tanks may have been in service for as long as 40 years. The tanks and ancillary equipment may have corrosion coatings and hardened waste residues on internal surfaces that may be very difficult or impossible to remove, given a reasonable amount of time and the limitations of available technology. Dangerous waste constituents may be leached from corrosion coatings or fixed waste residues at low concentrations. These concentrations may be high enough to exceed the closure performance standards. Internal surfaces of tanks and piping will not be readily accessible for application of extraction technologies or for inspection to determine compliance with the clean debris surface standard. Repeated attempts to meet the closure performance standards may result in generation of substantial amounts of secondary wastes and require extensive additional time. Therefore, application of all available decontamination technologies or repeated attempts to meet the closure performance standards may not be practical for some equipment, especially piping and small tanks. Experience in decontamination work at the time of closure may result in decisions to perform only limited decontamination before removing such equipment, and handling it only to the extent necessary to prepare it for encapsulation treatment and disposal.

Tanks and other unit components such as piping and secondary containment areas may still be radiologically contaminated when the dangerous waste clean closure standards are met. These components may not be needed or may not be usable for future missions, and will therefore be removed. These clean-closed, but radiologically contaminated components may not be eligible for release without extensive additional decontamination, and may be disposed as radioactive waste. Before or during closure, the cost factors involved such as, predicted secondary waste volumes, to achieve decontamination to clean-closed status, or removal and disposal as dangerous mixed waste, will be estimated. These costs will be compared

with the need to leave clean-closed unit components in place, and with the costs for replacing those components with new construction.

Uncontaminated components will be left for future uses unless DOE determines otherwise. Uncontaminated components are those that have not come into contact with, or been contaminated with, mixed or dangerous wastes. Uncontaminated equipment and structures could include:

- Exterior balance of facility systems and internal plant water supply systems
- Office heating, ventilation and air-conditioning (HVAC) components and piping
- Steam condensate and cooling water piping
- Control room and office areas
- Reinforced concrete and steel frame structures

Appropriate health and safety practices will be followed during closure to protect personnel from exposure to mixed waste constituents. Work will be performed to maintain as low as reasonably achievable (ALARA) worker exposure to radiation, radioactive waste constituents, dangerous waste and other workplace hazards. Preliminary indicators and a health and safety outline for closure will be prepared before operation. These documents will be finalized and included in the revised closure plan to be submitted to Ecology before closure begins.

Additional information will be provided in this section in the revised closure plan to be submitted before the start of operations as follows:

- Indicator parameters - preliminary
- Health and Safety Plan - outline
- Additional detail on designating waste streams to be generated during closure
- More specific regulatory requirements for packaging and encapsulation treatment of debris

11.2.1. Closure Standards for Soils, Groundwater, Surface Water, and Air [I-1a(1)]

The design of the RPP-WTP is intended to prevent any release of dangerous waste to the soil, groundwater, surface water, or air. Clean closure of the soil beneath the RPP-WTP will be accomplished by demonstrating that the stainless-steel process cell liners, and the coated concrete walls and floors in other units, have not lost integrity and therefore have prevented contaminants from reaching the soil. Where loss of containment integrity has occurred, the potential for soil contamination will be investigated. The demonstrations will consist of performing and documenting inspections and decontamination work, and soil investigations and removal, if necessary. Welded stainless steel floor and wall cladding provides secondary containment for the tank vaults, most of the containment buildings, and the ILAW and IHLW container storage areas. Waste handling ancillary equipment will be located within the permitted units or adjacent containment areas.

The liners extend across the floor and partially up the walls of each area. Above the liners, concrete walls and ceilings are coated with a durable chemical-resistant impermeable protective coating. Waste piping external to the permitted units is either double-walled or is provided with stainless steel ducting or lined pipe chases, or at the three condensate tanks adjacent to the LAW pretreatment plant, coated concrete secondary containment. Wastes that contain free liquid will not be stored in container storage units, unless every container holding free liquid is placed on a separate portable containment sump with a capacity of at least 110% of the container volume.

The need for sampling of soil will be determined on a unit-specific basis, and will take into consideration the unit operating history. Liner (cladding) inspections will be performed by the following methods: remote closed-circuit television (CCTV), if necessary due to radiation levels; gamma camera; and dye penetrant or other nondestructive evaluation (NDE) techniques. The inspections will identify areas of severe corrosion of the steel, seam weld failure, or accumulations of waste constituents in cracks or beneath cladding.

Liner breaches will be addressed by removal of the liner for a minimum distance of one meter (three feet) around the breach, and scarification of the concrete to remove contamination. The extent of liner removal will be expanded to expose the entire contaminated concrete surface as indicated by visible staining, gamma camera data, or other indicator techniques. If no potential through-thickness cracks or other areas where the concrete has lost integrity are observed, and the contamination can be removed to produce a clean debris surface after removal of at least 0.6 cm of concrete, the decontaminated section of floor or wall will be considered clean closed.

In a worst case scenario, it may not be possible to produce a clean debris surface at shallow depth (0.6 cm) in the concrete behind a floor or wall liner breach, or under deteriorated protective coating on a wall or ceiling above the cladding. This scenario could occur at a through-wall crack, or where the concrete is deteriorated, for example, due to acid exposure. If such conditions are found behind a liner breach, removal of a considerably larger volume of concrete may be necessary to produce a clean debris surface around the full extent of the problem area. If the contaminated area is restricted to an interior wall, an interior floor above the bottom floor of a building, or an exterior wall above the ground floor of a building, there will be no potential for soil contamination. If the contaminated area behind a cladding breach is on a floor or wall adjacent to soil (on the other side of the concrete), and the concrete in the contaminated area has lost integrity, that is, is cracked or otherwise deteriorated, potential soil contamination will be investigated further.

Inspection and decontamination of units with unclad concrete floors were discussed in section 11.2.

The existence of radiological contamination in concrete floors, and possibly walls, in contact with soil; or observation of potential through-thickness cracks or crumbling concrete at a liner breach location; or at a unit with deteriorated concrete floor coating; where a dangerous waste release is known or suspected to have occurred, will indicate probable containment failure and potential soil contamination. Investigation of potential soil contamination will be accomplished through coring and sampling of both the concrete and the soil. Biased sampling will be focused in the vicinity of the liner defect or coating defect(s), concrete cracks, or the known or suspected release location(s), and samples will be analyzed for constituents of concern (COCs).

Risk assessment principles will be used to establish clean closure concentration limits for soils in accordance with WAC 173-303-610(2)(b)(i). Industrial exposure assumptions will be incorporated in the calculation of soil concentration limits. These exposure assumptions are justified based on the anticipated long term use of the RPP-WTP site and surrounding land, as noted in section 11.2. Given the long operating life of the RPP-WTP and the current state of flux in risk assessment assumptions, toxicity data and regulatory guidance, calculation of specific limits is not appropriate at this time.

In establishing soil clean closure concentration limits, consideration will also be given to "area background", as defined in Ecology's *Guidance on Sampling and Data Analysis Methods* (Ecology Publication 94-049). The *TWRS Phase 1 Privatization Site Preconstruction Characterization Report* (HNF-2067, Revision 0, March 1998) and the *Hanford Site Background Part 1, Soil Background for Non-radioactive Analytes* (DOE/RL-92-24, Rev. 3), or other site-specific soil background information

will be used to assist in determining background levels in the soil. If the closure soil sample data are at or below the calculated soil cleanup levels, or site-specific background concentrations, whichever is greater for each constituent, the soil will be considered clean closed.

Due to the level of containment provided at the RPP-WTP, non-permitted releases of wastes to soil, groundwater, surface water, or air are not anticipated.

Soil sampling will be addressed in a sampling and analysis plan (SAP) that will be included in the revised closure plan, if necessary. An outline for the SAP is provided in section 11.3.4 of this plan. The SAP will be consistent with *Guidance for Clean Closure of Dangerous Waste Facilities* (Ecology Publication 94-111).

Specific soil clean closure levels will be developed in consultation with Ecology, and submitted in a revised closure plan for Ecology review and approval prior to the start of closure.

11.2.2. Closure Standards for Decontamination of Structures and Equipment [I-1a(2)]

Some of the waste-contaminated structures and ancillary equipment that will undergo decontamination during the closure of the RPP-WTP consist of equipment with smooth metal surfaces. Concrete and protective coating surfaces will also be decontaminated as part of closure. The types of structures and associated equipment that may be decontaminated to meet the clean debris surface standard include, but are not limited to the following:

- Interior and exterior tank and pipe surfaces
- Containment area stainless steel liners (cladding)
- Uncoated concrete floors and walls behind cladding
- Coated concrete walls and ceilings above secondary containment cladding
- Coated concrete floors

Decontamination of interior surfaces of tanks and pipes, and documentation that they meet the clean debris surface standard, may or may not be possible, given the current state of decontamination and inspection technologies. At present, the available miniature equipment may not be adequate to remove hardened waste or contaminated corrosion coatings from relatively inaccessible interior tank and pipe surfaces. Similarly, available video equipment may not provide the inspection capability necessary to demonstrate attainment of the clean debris surface standard on interior surfaces.

Decontamination of equipment and stainless steel cladding or liners will be conducted by using water washing and spraying or ultrahigh-pressure water jetting, or other technologies listed in section 11.3. Residues from these extraction operations will be collected, sampled as necessary, designated in accordance with WAC 173-303, and transferred to a TSD facility such as the LERF/ETF or CWC for treatment, storage and/or disposal.

Decontamination of intact protective coated surfaces on concrete to meet the clean debris surface standard will also be performed through water washing and spraying, or other more aggressive chemical extraction technologies. The protective coating on concrete is designed and applied to provide a durable, non-porous surface. The exposed surface protective coating is not concrete, although the underlying concrete supports it. If decontamination of the impermeable protective coating surface cannot be completed through chemical extraction, or if the protective coating has broken, cracked or peeled away from the concrete, then at least 0.6 cm (0.24 inches) of the underlying concrete will be removed using one or more of the physical extraction technologies. The physical extraction performance standard for concrete is removal of 0.6 cm of

the surface layer and treatment to a clean debris surface, as noted in the *Guidance for Clean Closure of Dangerous Waste Facilities* (Ecology Publication 94-111), section 5.8.

Metal surface areas or equipment that are not adequately cleaned, or cannot be documented to meet the clean debris surface standard, may be chemically extracted with decontamination solutions or agents. Rinsate may be sampled and analyzed, using methods complying with *Test Methods for Evaluating Solid Waste, Physical Chemical Methods* (US EPA SW-846, as amended), for Ecology-approved indicator constituents. Indicators will be determined on the basis of process knowledge, the operating record and waste characterization analyses, whenever possible.

Analytical data less than designation limits will indicate successful decontamination and attainment of the clean closure performance standard for the tank, piping, or other metal structures and equipment. Documentation of the representative character of the sample and laboratory quality control and quality assurance data will be entered into the closure record as specified in sections 11.3.4 and 11.4.1. Concrete and protective coated concrete surfaces will not be addressed using designation limits.

If the metal structure or equipment cannot be considered decontaminated using the clean debris surface or designation limit criteria, or if further decontamination is determined to be impractical due to high radiation levels, waste minimization, cost considerations or other reasons, it will be packaged using the debris treatment standard for immobilization by encapsulation. The waste will be designated on the basis of process knowledge, and transported to a permitted dangerous or mixed waste disposal facility such as Hanford LLBG mixed waste trenches. Examples of equipment that may undergo encapsulation and disposal include but are not limited to the following:

- Tanks and pipe
- Melter offgas duct work; scrubber, condenser, precipitator, and washout holding vessels
- Pumps, agitators, wash rings, and ejectors
- Air, steam, and water lines within unit containment areas

Contaminated items and solid decontamination residues removed from the RPP-WTP will be designated, packaged and treated as necessary to meet the waste acceptance criteria of the receiving facility. Sampling of items and solid residues known to be contaminated and intended for disposal is not necessary if process knowledge is adequate to accurately designate the wastes with the proper dangerous waste identification codes.

Treatment and disposal plans for wastes to be generated during closure cannot be fully defined at this time. Treatment technologies will be developed and refined by the Permittees and others, while the RPP-WTP design is completed and the plant is constructed and operated.

Additional information will be provided in this section of the revised closure plan to be submitted before the start of closure. Information to be provided includes:

- Macroencapsulation treatment plans for common debris that may be generated during closure
- Decontamination agents, solutions or detergents, and other decontamination technologies

11.2.3. Closure Standards for Tank Systems

At closure of a tank system, the owner or operator is required by WAC 173-303-640(8)(a) to remove or decontaminate waste residues, contaminated containment system components (such as liners),

contaminated soils, and structures and equipment contaminated with waste, and manage them as dangerous waste, with few exceptions.

For the purposes of the RPP-WTP closure, the standard is interpreted to mean that each tank and associated ancillary equipment, including the secondary containment area, will meet the clean debris surface standard and/or designation limit criteria for rinsate. Indicator constituents or constituents of concern (COCs) to be used for rinsate evaluation will be determined using process knowledge, including consideration of the available waste characterization data, and other relevant information in the facility operating record.

Inspectable surfaces may be declared "clean" if they meet the definition of a clean debris surface, including concrete containment walls with intact protective coating surfaces, and "physically extracted" concrete surfaces behind cladding breaches, or under abraded or loose protective coating that have had at least 0.6 cm of material removed from the original surface. Rough or inaccessible metal surfaces such as corroded tank containment area liner surfaces, or tank and pipe interior surfaces, may be declared clean when the decontamination solution sample is analyzed, with appropriate quality control and quality assurance as noted in section 11.3.4, and the indicator parameter or COC data are determined to be less than or equal to the designation limits.

If in certain cases, decontaminating a tank system in place is not feasible or is ineffective, an alternative method is to remove the tanks, disassemble them, and decontaminate the tank parts using extraction technologies described under alternative treatment standards for hazardous debris (40 CFR 268.45). With Ecology's concurrence, the decontaminated debris can then be disposed as non-dangerous (but possibly controlled as radioactive) waste, as indicated in section 4.3 of *Guidance for Clean Closure of Dangerous Waste Facilities* (Ecology Publication 94-111).

Tank systems will be inspected for compliance with the clean debris surface standard by observing the external and internal metal surfaces. Portions of a tank system that cannot be fully inspected (such as interior surfaces of tanks and attached piping, pumps, ejectors, and welded pipe connections or penetrations) or that may pose ALARA compliance problems, may be decontaminated with chemical or physical extraction technologies. The decontamination solution(s) from these portions of the system will be sampled and analyzed for indicator parameters, and the results will be compared to waste designation limits. Solid residues will be removed, containerized, designated and disposed at a permitted disposal facility as required. The tank or ancillary equipment, if not decontaminated to meet either clean closure standard, will be removed, treated as necessary, and disposed in a permitted landfill. Treatment may include macroencapsulation or microencapsulation, or other processes that comply with land disposal restrictions.

Standards for clean closure of tank system secondary containment are identical to standards for decontamination of containment areas for the container storage, containment building, and miscellaneous units, that is, clean debris surface standard and/or designation limits.

The proposed COCs will be submitted to Ecology with the revised closure plan to be submitted before the start of operations, and finalized in the revised closure plan to be submitted before the start of closure.

11.2.4. Closure Standards for Container Storage Areas

In addition to the requirements of WAC 173-303-610, WAC 173-303-630(10) requires that at closure, dangerous waste and dangerous waste residues will be removed from the containment system. Remaining

containers, liners, bases, and soil contaminated with dangerous waste or dangerous waste residues will be decontaminated or removed.

Standards for clean closure of clad container storage secondary containment are identical to standards for decontamination of containment areas for the tank system, containment building, and miscellaneous units (that is, clean debris surface standard and/or designation limits). Special requirements for clean closure of several units with coated concrete floors were explained in sections 11.2.1 and 11.2.2.

11.2.5. Closure Standards for Containment Buildings

At closure of a containment building system, the owner or operator is required by WAC 173-303-645 (incorporating 40 CFR 264.1102(a)) to remove or decontaminate waste residues, contaminated containment system components (such as liners), contaminated soils, and structures and equipment contaminated with waste and leachate, and manage them as dangerous waste, unless WAC 173-303-070(2)(a)(ii) applies.

Standards for clean closure of containment building units are identical to standards for decontamination of containment areas for the tank system, container storage and miscellaneous units (that is, clean debris surface standard and/or designation limits).

11.2.6. Closure Standards for Miscellaneous Units

The owner or operator is required by WAC 173-303-680 (2) to close miscellaneous units in a manner that will ensure protection of human health and the environment. The performance standard for closure is identical to the standard for the active life of the unit.

The LAW and HLW melters will be removed and replaced several times during the operational life of the RPP-WTP. Removal and replacement are not considered closure or partial closure activities. "Spent" melters may be replaced according to the schedule based on the design life of the melter components, or "failed" melters may be replaced when unplanned failure of a component occurs. In either case, all ancillary and supporting equipment will be removed or disconnected from the melter after molten glass has been removed to the maximum practical extent.

Openings to the LAW locally shielded melter (LSM) units will be mechanically closed, and they will be removed from the LAW vitrification building, after surface decontamination, as single containers.

Spent HLW melters will be overpacked in a specially designed shield cover, then removed from the HLW vitrification building. Failed HLW melter units may be removed from the building and placed in a melter storage building (a permitted container storage unit). During closure of the RPP-WTP, the failed melters may be transported back into the HLW melter cave to be partially decontaminated and reduced in size or volume, if necessary, to meet disposal site radiological waste acceptance criteria.

Spent LAW and HLW melters may also be stored in the melter storage buildings if necessary to accommodate scheduling of treatment and disposal operations, or for other reasons. The melters will be encapsulated and shipped to permitted disposal facilities. Note that these events will not necessarily occur in this order; e.g., encapsulation may occur at a location other than the RPP-WTP, after removal from the RPP-WTP. The operational standard to be met during these closure activities is to prevent releases of dangerous or mixed wastes to the environment, or outside the unit containment areas.

The miscellaneous units will be housed in containment building units, the HLW melter cave and the LAW LSM gallery.

Standards for clean closure of the miscellaneous unit secondary containment areas are the standards for decontamination of containment building units (that is, the clean debris surface standard and/or designation limits).

11.3. Closure Activities [I-1b]

This section describes closure activities that will be conducted to meet the clean closure performance standards. Section 11.3.1 describes the maximum extent of operations. Section 11.3.2 describes the process for removing dangerous (mixed) wastes from permitted units. Section 11.3.3 identifies several chemical and physical extraction technologies that may be used to achieve the clean debris surface standard. Section 11.6 describes how each of the four types of permitted units will be closed. The goal for closure of the RPP-WTP is clean closure, which is contingent on achievement of the clean debris surface standard or verification that indicator constituents in decontamination solutions from the units are not present in concentrations above designation limits. If soil is found contaminated, it will be removed until the remaining concentrations are less than or equal to risk-based concentration limits based on industrial exposure factors.

Partial closure may be considered for the mixed waste units, that is, one or more treatment processes or tank systems may be closed prior to the start of closure of the entire plant. Closure of a single unit or group of units could be necessary if a process were to be redesigned, eliminating the previous functions of the unit(s). Abnormal occurrences could also force partial closure, such as plugging of a tank or piping. Partial closures of the plant are not planned, but could result from unforeseen circumstances. The closure plan will be revised to address the specific details for the unit(s), if partial closure is necessary, and submitted to Ecology for review, approval and incorporation into the permit.

The following assumptions were made in developing the closure plan:

- The maximum waste inventory will not be present at the start of the closure period. The maximum inventory will be present approximately nine months or more before the start of the closure period. This is the case because of the batch nature of the entire RPP-WTP treatment scheme. The last transfer of waste feed from the DST System unit to the RPP-WTP may be as large as one million gallons. The treatment systems within the RPP-WTP will operate normally until the last portions of this final transfer are treated.

- The LAW pretreatment plant and the HLW melter will be treating mixed waste and will be fully operational at the start of the closure period. These portions of the RPP-WTP will continue to operate during the closure period until the tank system flush solutions and residues are removed from each system to the maximum practical extent and treated before final decontamination begins.

- Operating records documenting the constituents and volumes of the wastes in the storage and treatment areas, and of the wastes previously processed through the facility, will be available. The operating record also will include detailed information on historical releases of wastes into secondary containment areas, previous decontamination work, and equipment that is present in containment areas. This information will be directly relevant to final detailed planning of decontamination steps and procedures, especially treatment and disposal of the decontamination solutions and residues that will be generated.

- A release of wastes outside permitted unit secondary containment areas has not occurred.

- Equipment necessary for waste removal and equipment decontamination will be functional or can be repaired or replaced.

- Permitted TSD facilities will be available to receive dangerous and mixed wastes that will be generated during closure.

Overall Closure Approach

After the final waste feed shipment or inventory is processed, the LAW-LSM units will be closed and removed from the site. Tanks and piping will be flushed in the order to be specified, and following procedures to be developed, in deactivation planning. The flush solutions will be treated in the LPP by filtration and evaporation, and concentrated solids will be immobilized in glass produced in the HLW melter. Immobilized waste may or may not be acceptable at the facilities that accepted standard ILAW and IHLW during the operating life of the RPP-WTP. Specific disposal plans for this type of waste may not be finalized until submittal of the final revised closure plan before the start of closure. All pretreatment and vitrification operations will be completed at the end of the deactivation activities.

The second general step in the overall closure approach is to decontaminate RPP-WTP unit components to the maximum feasible extent, and remove components that cannot be decontaminated, to meet the clean closure performance standards. Contaminated components will be disposed, and the residues and decontamination fluids remaining after treatment operations at the RPP-WTP have ceased will be transferred to the CWC, LERF/ETF or another Hanford Site permitted TSD facility. Other Hanford Site TSD facilities that may be considered for treatment or disposal of closure wastes in addition to the CWC and LERF/ETF include the LLBG and the Waste Receiving and Processing (WRAP) facility.

Vitrification treatment will not be available after the last melter is shut down, near the completion of deactivation work. Small quantities of feed waste or flushing residues may remain in tanks after the last melter is shut down, in addition to insoluble adhered coatings in piping and tanks. The remaining aqueous residues may have to be transferred to the LERF/ETF or the CWC for evaporation, precipitation, filtration, solidification or other treatment, or back to the double shell tank system for storage.

General Sequence of Closure Activities

The general sequence of activities necessary to close dangerous waste management units within the RPP-WTP, and the basis for establishing the order of performing these activities, is summarized in the following discussion:

Deactivation

- Dangerous Waste Removal – The nonradioactive dangerous waste will be removed from the RPP-WTP to minimize the possibility of release. Note: dangerous wastes may be generated at the RPP-WTP throughout the closure period from maintenance activities.

- Inventory Removal - The mixed waste inventory present in the RPP-WTP at the beginning of the closure (primarily heels in the bottoms of tanks) will be removed and processed (pretreated and vitrified) to the maximum practical extent. This removal will minimize the possibility for release and allow decontamination of the equipment to proceed. Implementation of the deactivation plan will

remove the majority of the dangerous wastes from the RPP-WTP. Tank systems and equipment- will undergo flushing as part of deactivation activities.

Decontamination

- Liner Inspection – After removal of wastes, i.e., flushing, but before final decontamination of tanks and other units begins, each containment area will be inspected to identify potential or apparent breaks, cracks, or separation of the liner or protective coating from the concrete floors and walls. These locations (if any) will be mapped and documented, and sealed by welding or by application of patching or protective coating material, to prevent entry of contaminants during decontamination activities.

- Decontamination - Tank systems and other equipment in the permitted units will be decontaminated. Additional chemical or physical extraction may be performed before tank systems, piping, or the equipment and equipment support structures in any permitted units are removed. Extraction will be performed not only to meet clean closure standards detailed in section 11.2, but also to minimize the amount of mixed waste constituents that would be readily available for migration or release during equipment removal.

- Equipment may be left in place as "clean-closed" if it can be successfully decontaminated, and if DOE has determined that the equipment should stay in place.

Inspection

- Equipment Inspection – Tank systems and ancillary equipment will be inspected to ensure the clean debris surface standard and/or rinsate analyses designation limits are met, or the equipment will be identified as requiring removal, encapsulation and disposal.

Removal

- Equipment Removal – If the process equipment cannot be decontaminated to meet the closure performance standard, it will be removed, treated by encapsulation, and disposed at a permitted facility. Size reduction treatment may also be performed.

- Melter Decontamination – At the start of the closure and deactivation periods, that is, after the last batch of waste feed has been fully processed through the waste treatment plant, the LAW melters will be shut down and removed. LAW pretreatment process vessels and lines will be flushed with water or other solutions. Flushing wastes will be treated in the LAW pretreatment evaporation, Cs and Tc removal, and ultrafiltration processes, then the concentrates will be transferred to a HLW melter. Water condensate will be routed to the LERF/ETF. Similarly, the HLW ultrafiltration system will be flushed to the LAW evaporator and ultrafiltration systems. One HLW melter will be operated after shutdown of the LAW LSMs to provide treatment for the solid flushing residues and evaporator concentrates. At the completion of treatment operations, the HLW melter will be emptied, cooled, overpacked and removed. HLW melters stored in the failed melter storage building at the time of closure (if any) may be partially decontaminated, and/or reduced in size in the HLW melter cave, to the degree necessary to meet disposal facility waste acceptance criteria. (See section 11.3.3.) LAW LSMs are not expected to require decontamination or size reduction treatment, other than surface decontamination after the operating equipment openings are closed. Partially decontaminated and/or size-reduced failed HLW melters will be overpacked, encapsulated and shipped to a permitted disposal facility.

Structure Decontamination

- Building Structure Decontamination – Stainless steel lined containment areas: Liners in the permitted unit containment areas will be decontaminated using chemical or physical extraction technologies, or both. Most of the secondary containment areas in the process buildings are lined with stainless steel cladding. Coated concrete walls and ceilings (above cladding) will be decontaminated using only chemical extraction technologies, unless the protective coating is damaged or deteriorated. Damaged protective coating areas, and contaminated concrete under or behind liner breaches, will be decontaminated using physical extraction technologies. Decontamination solutions may be sampled to determine treatment requirements and transferred via existing pipelines to the LERF/ETF if they meet the LERF/ETF acceptance criteria. The level of radioactivity of some waste solutions may be above maximum limits for the LERF/ETF, and the waste may have to be transferred instead to another permitted Hanford TSD unit. Structure decontamination activities are described in section 11.3.3.

- Building Structure Decontamination – Concrete containment areas: Examples of units that have coated concrete secondary containment without stainless steel cladding include the condensate tank system, the LAW LSM gallery, ILAW container finishing line and ILAW container fixative containment buildings, and several secondary waste container storage areas. Of these, only the dangerous waste container storage area and possibly the central waste storage area are expected to routinely store containers holding liquid wastes. At the time of closure, the facility operating record will be reviewed and each unit will be inspected to determine if releases of wastes from containers have occurred in any of these areas. If a release of dangerous waste has occurred on a concrete floor where the protective coating is even slightly damaged or deteriorated, the concrete in that area will be physically extracted to remove at least 0.6 cm of concrete from the original surface. This effort will demonstrate compliance with the clean debris surface standard. If a release is not documented or suspected, minor or hairline cracks may still be accepted in determining that the clean debris surface standard is met. If the protective coating is intact, the surface may be decontaminated by chemical extraction. If chemical extraction is unsuccessful, or if the coating is damaged by the chemical extraction, physical extraction will be performed.

- Building Examination to Verify Decontamination – Each unit will be inspected and closure documentation will be examined to verify that the clean closure standards have been met, after each unit in each building has been decontaminated.

Soil Investigation, Removal and Verification

- Potentially Contaminated Soil Identification – Areas in which soil could have become contaminated, that is, areas in which liners and/or concrete have lost integrity, will be mapped during the liner or concrete containment area inspection and decontamination process. Soil sampling protocols will be established and implemented if potentially contaminated areas are identified.

- Soil Decontamination - Soil removal will be performed if necessary. A revised closure plan and a postclosure plan will be submitted if removal to the established risk-based standards is not feasible.

- Soil Sampling to Verify Decontamination for Indicator Constituents - The soil will be sampled and analyzed for indicator constituents after contaminated soil (if any) has been removed.

Disposition of Decontamination and Containment Wastes

- Disposition of Decontamination Fluids - Wastewater or chemical extraction solutions from decontamination activities will enter an existing collection system for waste characterization and verification against LERF/ETF waste acceptance criteria. At the final stage of closure, when the transfer pipeline to the LERF/ETF is taken out of service, decontamination solutions may be containerized and transported to the LERF/ETF by truck. Characterization of the closure residues in the units will be documented based on process knowledge of the waste treated in the units and/or analysis. Once the determination has been made that the wastewater may be received or treated by LERF/ETF, the waste will be transferred for treatment. If the wastewater cannot be accepted by LERF/ETF, it may be solidified and transferred to the CWC or another available permitted unit.

- Disposition of Air Emission Control Equipment - Air emission control equipment will remain in place until decontamination of other RPP-WTP components meets the clean closure performance standard(s). The air emission control equipment will be decontaminated to meet the clean closure performance standard, or will be removed, designated, and packaged to meet the waste acceptance criteria of a permitted disposal facility.

- Disposition of Decontamination Equipment - Equipment or materials used in performing closure activities will be decontaminated or disposed at a permitted disposal facility. Personal protective equipment will be disposed at a permitted disposal facility.

The general order of closure activities was selected to minimize the potential for release of mixed waste constituents by removing the bulk of the mixed waste constituents early in the closure process. This order of closure also minimizes waste generation by reducing the possibility that decontaminated areas will become contaminated again by ongoing closure efforts.

Detailed scheduling of closure activities depends on the necessary facility functions required to be maintained during the closure period, and the degree of contamination in each unit, especially after the waste inventory is removed and decontamination activities start. The large number of tank systems increases the potential for a highly complex schedule. Similar tank systems and other types of units will be grouped for the purpose of minimizing the bulk and complexity of plans for closure activities. The detailed decontamination operations schedule will be included in the revised closure plan to be submitted before the start of closure activities. (See section 11.7.)

Work will be performed in a manner that ensures worker exposure to dangerous and/or mixed waste, radioactivity, hazardous chemicals, or other workplace hazards will be ALARA.

Additional detail will be provided describing waste removal, equipment decontamination and closure-generated waste disposal activities in the revised closure plans to be submitted before the start of operations. Refer to Supplement 8 for the information completion schedule.

11.3.1. Maximum Extent of Operations [I-1b(1)]

The maximum extent of operations during the active life of the RPP-WTP corresponds to the maximum waste inventory with feed tanks full, the melters operating at design capacity, and the storage areas full.

The general arrangement drawings in Appendix 11A show the location of tanks, melters, containment building and storage areas.

11.3.2. Removing Dangerous Waste [I-1b(2)]

The waste feed inventory present in the RPP-WTP after the final receipt of waste feed from the double shell tank system unit will be processed before the start of the first phase of closure. The waste will be removed from tank systems to the maximum practical extent. Removal will be continued by processing the last bulk volumes of waste feed through the applicable pretreatment and vitrification systems, and transferring treated ILAW and IHLW to other TSD units or facilities from the container and canister shipping docks. These activities will follow normal operating procedures. Ecology will be notified, at least 45 days before the start of the closure period. The closure period will begin within approximately 30 days after completion of treatment of the final waste feed transfer from the DST System unit. -

The following description of waste removal is intended to provide a brief overview of the deactivation and closure activities.

At the completion of waste operations, BNFL will deactivate the waste facilities and their contents. Deactivation, when completed, will leave the facilities in a safe, stable, and passive state that can be monitored with minimal cost and minimal requirements for service support from either personnel or active equipment.

Deactivation operations will comprise a large portion of the closure activities that will occur between the start of the "closure period" as defined in WAC 173-303-610(3)(c)(ii), and the final shutdown of the HLW vitrification system. Deactivation and the first half of the closure period will overlap, and will contribute to completing closure activities in accordance with WAC 173-303-610. Deactivation operations may begin for some units before the completion of treatment of the final batch of waste feed from the DST System unit.

Overlaps between dangerous waste unit closure and deactivation activities, and the overall treatment, storage and disposal facility permitting process, as defined in the *Hanford Federal Facility Agreement and Consent Order* (Ecology, EPA and DOE, 89-10, Revision 5, December 1998) and the implementing attachment known as the *Tri-Party Agreement Action Plan*, Section 6.2, are illustrated in Figure 11-4. The full extent of necessary interfaces, and detailed definition of the intermediate points in this timeline, will not be determined until deactivation and closure planning are finalized before the start of closure.

Vitrified waste in storage at the RPP-WTP at the start of the closure period will be shipped to disposal units on the Hanford site (ILAW) and at other appropriate facilities (IHLW), in accordance with the requirements established for the operational life of the RPP-WTP. If the inventory of untreated waste feed cannot be treated at the RPP-WTP, it will be transferred to a permitted TSD facility, which will probably be the DST system. Circumstances under which the waste feed inventory would not be treated through vitrification are not accounted for in this closure plan and would require revision of the plan. Properly completed shipping papers and certifications, as applicable, will accompany waste shipments.

Once the RPP-WTP final batch of waste feed has been processed, residual heels will be flushed from the tank systems in accordance with deactivation procedures. Wastewater from flushing and decontamination solutions will be filtered, evaporated and further treated as necessary in the RPP-WTP LAW pretreatment building. The removed solids will be sent to the HLW melter. Wastewater will either be sent to the LERF/ETF for treatment, if it meets the LERF/ETF waste acceptance criteria, or be transported to the CWC or another permitted TSD unit for storage, treatment and disposal. Treatment in containers could be performed at the RPP-WTP if necessary or preferable, and if the resulting waste will meet the CWC or another TSD unit's waste acceptance criteria. The treatment in containers alternative is not likely to be used, due to the relatively large volumes of flush solutions that will be generated. The tank flushing

operations required for deactivation may generate more than six million gallons of contaminated wastewater.

If any non-mixed dangerous waste is present as inventory at the start of the closure period at the dangerous waste container storage unit, it will be transferred to a permitted off-site facility for treatment or disposal. Any non-mixed dangerous waste generated during the closure or deactivation work will be managed similarly.

The units the wastes will be sent to cannot be predicted at this time because the specific types of dangerous wastes that may be present cannot be determined. The TSD units available at the time of closure, and their waste acceptance criteria, may be very different than those of today.

Complete records will be kept as to the date of shipment, waste characterization, waste quantity, destination facility, land disposal restriction (LDR) certifications and notifications, and other appropriate information for removed waste. Specific documentation requirements are discussed in Appendix 3A of the application. This information will be included in the closure documentation supporting certification, which is described in section 11.4.1.

The specific types of off-site treatment and disposal units for dangerous wastes generated during closure will be determined and provided in the revised closure plan to be submitted before closure begins. Interfaces with the DST System unit and LERF/ETF will be specified in the revised plan to be submitted before the start of closure.

11.3.3. Decontaminating Structures, Equipment, and Soils [I-1b(3)]

The only structures and equipment that are expected to be contaminated at the start of the closure period are within the permitted unit containment areas. Some of the types of waste handling equipment that may be located in each unit can be determined by review of the design drawings and operating plans in this application. Examples include, but are not limited to, cranes, power manipulators, and welding machines. Many other types of hand tools, instruments, lights and cameras, radiation monitors, buckets, and other equipment may be present in one or more unit containment areas.

Contaminated structures and equipment will be decontaminated, if feasible, using one or more of the following technologies to achieve the clean closure performance standard:

- Ultrahigh-pressure water jet
- Rotating cavitation water jet
- Soap scrubbing and wet vacuuming
- Steam vacuuming
- Vacuum abrasive blasting
- Soda blasting
- Shot blasting
- Ice blasting
- Hydroblasting
- Grit blasting
- Cryogenic CO_2 pellet blasting
- Sponge blasting
- Etching
- Rotating brushes/honing

More aggressive decontamination methods may be used on concrete if it becomes necessary to remove waste accumulations that extend into the concrete:

- Needle Scaler
- Paving Breaker/Chipping Hammer
- Piston Scabbler

These decontamination technologies were chosen based upon demonstrated effectiveness in a radioactive environment and the ability to successfully achieve the closure performance standard. These technologies are covered under the generic physical or chemical extraction technology categories listed in 40 CFR 268.45, Table 1. This approach is consistent with Ecology guidance (Ecology Publication 94-111) to achieve clean closure.

Specific methods of decontamination and, if required, removal and disposal for the unit components and equipment, will be determined at the time of closure based on information in the operating record, existing radiation levels, and DOE plans for future use of the buildings. The feasibility, or practicality, of decontamination depends on many factors that cannot be fully defined until the closure plan is finalized. Decision criteria may include, but are not limited to, radiation hazards, secondary waste volumes, schedule and budget restrictions, and availability of TSD facilities to receive secondary wastes. Equipment and debris that are not decontaminated will be disposed as mixed waste.

Decontamination solutions from interiors of tanks, attached piping, and other equipment will be collected in tank drain piping and collection tanks. Decontamination solutions from tank and pipe exterior surfaces, and from decontamination of other free-standing ancillary equipment and secondary containment walls, ceilings, and floors in the four types of units will be collected in containment area sumps, then transferred by pumping or gravity drainage to plant wash collection tanks. Exceptions may include decontamination of small surface areas where drainage may be captured in portable collection basins or buckets. Transfers of decontamination solutions to the LERF/ETF, CWC or another on site TSD unit, or if the waste is non-mixed, to an off site TSD facility, are addressed in section 11.3.2.

The decontamination solutions and residues will be designated on the basis of process knowledge or sampling and analysis if necessary, and transferred by existing hard piping to the LERF/ETF. The pipe connection to the LERF/ETF will be one of the last RPP-WTP components to be taken out of service, after decontamination activities are complete. The last few decontamination activities may require the collection of wastewater in a temporary sump and container(s), and transported by truck to the LERF/ETF.

Solid residues will be collected into containers by vacuuming or mechanical means (such as sweeping or shoveling), treated, if necessary, at the RPP-WTP, CWC or WRAP to stabilize or solidify the residues, and disposed in the LLBG or a permitted disposal unit on the Hanford site. Off-site mixed waste landfill disposal facilities such as Envirocare of Utah may be considered if an appropriate Hanford site unit is not available.

Contaminated debris and solid decontamination residues removed from the RPP-WTP will be designated and packaged to meet the waste acceptance criteria of the receiving facility. Sampling of equipment and solid residues that will be known to be contaminated and are intended for disposal is not necessary, if process knowledge is adequate to accurately designate the waste with the proper dangerous waste identification codes. Process knowledge includes the operating record, which should provide adequate waste analyses and waste processing histories for each unit in the RPP-WTP.

Final disposition of high level mixed waste decontamination residues, such as bulk quantities of broken glass removed from "failed" HLW melters, may involve special considerations that are external to the RPP-WTP and Hanford, and cannot be determined at this time. Approximately three HLW melters are predicted to "fail" with broken electrodes or other problems that cause treatment to be stopped while the melter is full, or partially full, during the assumed 40 year operating life of the plant. The failed melters will be emptied to the extent practicable and stored in a permitted melter storage building, with room for 3 melters, until closure.

Failed HLW melters may contain transuranics (TRU) and other radionuclides in excess of the amounts allowed for disposal at Hanford in "spent" melters. In a worst case, a failed HLW melter may contain a rectangular block of glass waste several feet thick. The block of glass would be tightly bonded to the refractory brick lining the melter, and could not be removed except with energy intensive or extreme chemical (dissolution) methods. The current assumption is that most of that glass would have to be removed to meet the spent HLW melter acceptance criteria for disposal at Hanford. Since chemical removal would require construction of an entire new treatment system, physical removal appears to be more feasible. Physical removal could be performed using remotely operated heavy equipment such as power saws, jackhammers and drills, in the HLW containment building unit. Most of the necessary containment and operating equipment will be available in that unit.

Such wastes, if they are produced during closure activities, may warrant a one-time exemption from waste form or other waste acceptance criteria at disposal facilities that otherwise would not accept such wastes. For example, the waste acceptance criteria for the disposal facility where IHLW containers will be shipped during the operating life of the RPP-WTP are expected to limit the waste form to monolithic unbroken masses with very limited void volume in the container. Glass removed from failed melters may be severely fractured, and expanded in bulk volume and surface area.

Alternatively, a one-time exemption for disposal of (several) failed HLW melters at Hanford may be a reasonable option. Special encapsulation or other treatment might be appropriate as a condition for such exemption. Disposal of broken glass waste, or disposal of failed HLW melters at Hanford without partial removal of contained waste, will be addressed in the final closure plan to be submitted before the start of closure. This issue may be resolved long before closure begins, especially if more than three HLW melters have failed before then.

Additional information will be provided in this section prior to the start of operations. Information to be provided includes the following:

- Information to support selection of specific decontamination solutions or agents (that is, chemical and physical extraction technologies, indicator parameters and designation limits)

- Spent melter and other debris packaging and encapsulation equipment, materials and location(s)

Final selection of extraction technologies, designation limits, and debris treatment and disposal plans, will be included in the revised closure plan to be submitted before the start of closure.

11.3.3.1. Structures and Associated Equipment

Within most of the process areas, stainless steel liners or cladding supported by steel reinforced concrete structures provide secondary containment for the process tanks, immobilized waste containers, HLW melter, and ancillary equipment. Coated concrete surfaces in lined or clad waste management areas, the walls and ceilings above the liners, are not part of the required dangerous waste secondary containment

structure. Although, additional containment may thus be provided for splashes and airborne contamination. Concrete in clad units, where containment of splashes, washdown sprays or airborne contamination is necessary, will be coated during construction with a durable chemical-resistant impermeable protective coating. Top edges of the liner plates in these units will be sealed to the concrete surface.

The container storage areas for secondary wastes are discussed in section 11.2.2. The LAW LSM gallery containment building, the ILAW container finishing line containment building, the ILAW container fixative containment building, and the LAW pretreatment plant condensate tank system, are examples of the permitted units at the RPP-WTP in which the concrete floors are not provided with cladding. (The ILAW container finishing line unit has floor/wall cladding only in the container decontamination portion of the unit.) The floors and portions of some walls in these units will be coated. In the miscellaneous secondary waste container storage units, additional secondary containment is conditional. Most waste containers to be stored in these units will contain no free liquids, and therefore will not require secondary containment for liquids. The waste containers that contain free liquids will be provided with portable, individual, polyethylene containment structures or sumps.

Steel liners and coated concrete surfaces will be inspected visually and surveyed radiologically before final decontamination, or after, if the pre-decontamination radiation levels are too high, precluding useful gamma camera data. The visual inspection may be conducted remotely using CCTV with a zoom lens. The purpose of the inspections will be twofold: to identify and map cracks that might provide a migration pathway for contaminants; and to identify areas that are potentially contaminated with mixed waste or waste residues. The gamma camera will identify areas where contamination has infiltrated behind the cladding.

Identified cracks will be sealed prior to initiation of decontamination activities to prevent infiltration of decontamination solutions between the stainless steel liner and the concrete, or migration into cracks in concrete. Coated concrete and liner surfaces will be decontaminated to achieve the clean debris surface standard using chemical extraction, or if necessary, through physical extraction as described in section 11.2.

Concrete surfaces are eligible for decontamination by chemical extraction only if the protective coating is intact. Minor cracking in the protective coating will not disqualify the concrete surface from being eligible for classification as a clean debris surface, if that surface has not been directly exposed to dangerous waste as a result of a container leak or some other release mechanism. The facility operating record will be consulted before decontamination work begins to identify units where leaks or other waste releases have occurred. Inspection of these units with protective coatings on concrete, at the beginning of decontamination activities, will provide the opportunity to determine whether the protective coating is intact, and whether undocumented evidence of a waste release is present.

Intact protective coatings may be decontaminated by chemical extraction methods and inspected for a clean debris surface, or simply inspected with no decontamination required if there is no record or evidence of a release in that unit. Concrete surfaces where protective coating has peeled, bubbled, or is broken (exposing bare concrete), before or after chemical extraction decontamination, will not qualify as clean debris surfaces without physical extraction treatment. Cladding may also require physical extraction treatment to remove waste residues or corrosion. Inspections of the concrete and liner surfaces for a clean debris surface will be documented in an inspection record.

Concrete and steel grinding, scaling, or scabbling residues will be collected, placed in containers, and sampled and analyzed for indicator parameters, or will be designated based on knowledge of the process or the waste that contaminated the concrete or steel.

The operating record will be reviewed prior to closure to determine if decontamination procedures should be performed in any areas outside the permitted unit secondary containment areas. These areas may include equipment decontamination bays or containment sumps in transfer tunnels, or other locations where wastes may have been generated or transferred during the operating life of the RPP-WTP. A final revised closure plan that includes any such areas identified as a result of the operating record review will be submitted to Ecology for review and approval before closure starts. Floors and walls in nonprocess areas of the building such as offices, lunch rooms, or bulk storage areas for nonhazardous materials will not undergo decontamination activities unless there is evidence in the operating record that chemical spills or other occurrences may have contaminated interior surfaces of the rooms.

11.3.3.2. Air Emission Control Equipment

Air emission control equipment will remain in place and in operation as necessary to facilitate deactivation and decontamination of the RPP-WTP. Equipment will be taken out of service in stages as contamination is progressively removed or reduced. Compliance with applicable air emission standards will be maintained. The applicable air emission standards will be those in effect for the active operating life of the RPP-WTP, unless different standards are specified for closure.

Condition II.W.3 of the Hanford RCRA Permit requires that air emissions from TSD units subject to the Permit shall comply with applicable state and federal regulations pertaining to air emission controls. The applicable regulations include but are not limited to the following: WAC 173-400, *General Regulations for Air Pollution Sources*; WAC 173-460, *Controls for New Sources of Toxic Air Pollutants*; and WAC 173-480, *Ambient Air Quality Standards and Emission Limits for Radionuclides*.

Uncontrolled emissions will be prevented by continued operation of the vessel and process cell ventilation systems, and melter offgas control systems, as necessary throughout the performance of closure activities for those units, and by maintenance of containment structures and procedures. After completion of decontamination operations that may generate fumes, vapors, or dust that will be controlled by the ventilation system, the air emission control equipment will be decontaminated, then dismantled and reduced in size to the extent necessary to facilitate preparation for disposal. DOE may determine that it will remain in place after closure.

Modifications to air emission standards or other appropriate standards to prevent or minimize the release of dangerous waste or dangerous waste constituents to the air or surrounding environment during closure will be specified in the revised closure plan to be submitted before the start of closure.

11.3.3.3. Soil

Discovery of an apparent or potential breach in a cell liner, or in the protective coating in unlined units, on an exterior wall or bottom floor adjacent to soil, will require further investigation. The presence of soil contamination will be a unit-specific determination based on RPP-WTP records and direct visual or CCTV inspection and gamma camera survey of the stainless-steel liners and concrete surfaces, as described in section 11.2. The liner will be removed to allow access for additional investigation and decontamination if this inspection reveals areas of poor liner integrity such as severe corrosion, weld breaks, or other damage to the steel. Coring and soil sampling will be performed if a liner breach or damaged protective coating is found on a wall or floor adjacent to external soil, and if the concrete has lost integrity at that location. If the concrete is not cracked, deteriorated or porous, and a clean debris surface can be obtained by physical extraction treatment, no further investigation may be necessary. Data from radiation surveys may be useful at such locations to support decisions to continue or terminate further investigations such as coring the

concrete and sampling exterior soil. If soil is sampled, it will be analyzed for indicator constituents of concern identified on the basis of the wastes contained in that unit during the operating life of the plant.

If soil having levels of contamination that exceed the risk-based soil cleanup levels is found, it will be removed and managed as media "containing" dangerous waste, and will be designated and disposed accordingly at a permitted disposal facility. Soil at the limits of excavation will be sampled and analyzed after removals are completed to confirm that the concentrations of dangerous waste constituents are below the risk-based industrial exposure limits.

11.3.4. Sampling and Analysis to Identify Extent of Decontamination/Removal and to Verify Achievement of Closure Standard [I-1b(4)]

This section is an outline for a sampling and analysis plan (SAP) that describes the approach that will be followed to define the extent of contamination, if any, where cladding breaches, and concrete that has lost integrity, are found. The sampling and analysis plan will also assist in confirming that decontamination and/or removal activities have attained the closure performance standard. Sampling may be employed where the clean debris surface standard cannot be met, such as interior tank and pipe surfaces, or where evidence is found indicating apparent failure of permitted unit secondary containment such as liner cracks. The SAP cannot be finalized at this time because the dangerous waste constituents of concern at each unit, and restrictions on sampling and analysis activities due to high radiation levels, are not adequately defined. Prior to closure, this closure plan will be revised to specify sampling and analysis techniques in a site-specific SAP.

11.3.4.1. Sampling to Determine Extent of Contamination [I-1b(4)(a)]

The SAP will be prepared to evaluate the extent of soil contamination, and the effectiveness of decontamination at specific units in the RPP-WTP. This section discusses the design and outline of the sampling program. Subjects addressed in this section will be detailed in the revised closure plan and in the SAP prior to commencement of closure. Additional information concerning investigation tools such as the gamma camera, CCTV and other analytical or survey equipment will also be included in the final closure plan. The subjects addressed in this section include analytical parameters, sampling activities, and data quality.

Sampling Objectives

Sampling will be conducted to evaluate the extent of contamination and decontamination effectiveness at the RPP-WTP. Media anticipated to be sampled during closure of the RPP-WTP include rinsate from tank systems and ancillary equipment which does not meet the clean debris surface standard for inspection, that is, inaccessible areas, and soil at suspected release locations. Concrete may be sampled if necessary for waste designation purposes. Sampling will be conducted following decontamination of the interior surfaces of process cells. Sampling under structures, if required, will be conducted in a manner that minimizes disturbance of underlying soil.

If relatively high radiation levels are found in soil or on interior surfaces of equipment, sampling may not be practical due to potential worker exposure and/or laboratory contamination concerns. In such cases, it will be assumed that further decontamination or removal work will be performed to approach the dangerous waste clean closure standard, so sampling will not be necessary until radiation levels are reduced. The expected co-contamination of equipment and soil by both radionuclides and dangerous waste constituents is not a proven fact, and the actual ratio between the two types of contaminants will vary

widely. However, the proposed approach is conservative in assuming significant dangerous waste contamination wherever radionuclide contamination is found.

Sampling tasks in areas of suspected contamination (such as cladding breaches) and areas in which clean closure demonstrations may be needed are as follows:

- Select biased or "focused" sample sites, based on review of the unit operating record, cladding breach investigations and underlying concrete decontamination work and evaluations; or based on interior inspection data (e.g., from video, CCTV or radiation surveys) for tanks, pipe or other ancillary equipment.

- Obtain samples from specified areas, focusing on the locations of apparent highest concentrations. For soil, these locations will be immediately adjacent to or below cladding breaches and/or cracked or deteriorated concrete. The sample locations could theoretically expand extensively, as necessary to determine the limits of the volume of soil contaminated at concentrations above the risk-based limits. For tanks, piping or other equipment, the locations to be "rinsed" and sampled will include apparent or likely waste accumulations in crevices, connections, or other rough or restricted flow locations such as inlets or outlets. The rinse sample will be a "first" rinse, obtained within a reasonably short time after the completion of decontamination efforts, to avoid drying of potentially contaminated surfaces.

- Conduct analyses of samples.

- Evaluate results for closure, and provide feedback to the closure project management team. Documentation of analyses and resulting decisions (e.g., clean closure is complete, or more decontamination or removal work will be done) will be included in the record of closure activities.

Analytical Parameters

Analytical parameters, methods, and specific analytical and sampling procedures will be based on knowledge of the operations and wastes processed (process knowledge) in the RPP-WTP.

A list of indicator constituents will be developed based on potential COCs and the closure performance standard (designation and/or risk-based limits). These indicator constituents and associated analytical methods will be provided in the updated closure plan prior to initiation of closure. The analyses will follow the methods described in *Test Methods for Evaluating Solid Waste, Physical Chemical Methods* (US EPA SW-846, as amended). Practical quantitation limits will be established at a minimum of one order of magnitude less than the specified decontamination standard.

Sampling Methods

Sampling will be performed in a manner consistent with US Environmental Protection Agency (EPA) guidelines in the *Quality Assurance/Quality Control Guidance for Removal Activities: Sampling and QA/QC Plan and Data Validation Procedures, Interim Final* (EPA 540G90004), *Sampling and Mobile Laboratories Procedures* (Waste Management Federal Services SML-EP-0001), *Guidance on Sampling and Data Analysis Methods* (Ecology Publication 94-049), or other appropriate references. If evidence or knowledge of spills, or a failure of secondary containment exists, biased sampling will be conducted in accordance with applicable requirements of *Test Methods for Evaluating Solid Waste, Physical Chemical Methods* (EPA SW-846, as amended). Biased samples may be taken, as needed, from equipment or locations that cannot be visually verified to meet the clean debris surface standard. Some area-wide sampling may be conducted in larger areas of suspected contamination (if any). The area-wide sampling

will be performed in accordance with *Guidance for Clean Closure of Dangerous Waste Facilities* (Ecology Publication 94-111).

Specific sampling methods appropriate to the media to be sampled will be provided when the closure plan is revised and the SAP is prepared prior to closure. Decontamination solutions or water rinsate and soils are examples of the media that may be sampled. Concrete and other materials are not expected to be sampled, unless analyses are required for determining the correct waste designation. For waste characterization or designation purposes, representative samples of concrete rubble will be taken after removal from the structure. This approach may be changed if significant volumes of concrete are suspected to be contaminated.

Sampling Locations

Tank and pipe internal surfaces will be visually inspected if possible to identify potentially contaminated areas before sample collection. These areas will be identified and documented as part of the closure record, and biased sampling by application of rinse solution will be performed in these areas. Samples of rinsate may be obtained from decontamination of equipment at other locations that cannot be visually verified to meet the clean debris surface standard. Biased soil sample site locations will be determined by previous inspections during or after initial decontamination activities, liner removal and concrete decontamination physical extraction activities at cladding breach locations. Soil sampling could also be necessary at one or more of the container storage buildings that have concrete floors. Soil sampling locations at these units will be at through-thickness cracks or where the concrete has otherwise lost integrity, and a spill, container leak or other release is known or suspected to have occurred at that location.

Sampling Equipment, Containers, and Preservation

The sampling equipment used will be appropriate to the different media that may be encountered. Sample equipment and supplies will be procured as required to perform necessary sampling. Specialized sample collection apparatus for taking samples of rinsate from equipment will be specified in the SAP in the revised closure plan to be submitted to Ecology before the start of closure activities.

Sample containers will be selected based on their compatibility with the samples, types of analyses to be performed, resistance to leaking or breakage, ability to seal tightly, and the required volume for an optimum sample, in accordance with SW-846. Deviations from protocols in US EPA SW-846, as amended, will be documented and proposed to Ecology in accordance with WAC 173-303-110. Deviations will be proposed only in cases where compliance is impractical or would conflict with other requirements such as ALARA. Any such anticipated deviations will be proposed in the revised closure plan to be submitted to Ecology before the start of closure of the RPP-WTP. Containers for collecting and storing samples will be made of high-density plastic or glass appropriate for the constituents to be analyzed. The containers will have tight, screw-type lids, with Teflon cap liners for glass bottles.

Sample labels will be prepared according to the procedures outlined in US EPA SW-846, as amended. Labels with unique identification will be securely attached to each sample container to prevent misidentification. The labels may be adhesive or tags, and will be affixed to the proper sample containers before or at the time of collection. Information will be completed as closely as possible to the time of collection. Each label, or an associated record, will contain at least the following information:

- Site contractor
- Collector's name
- Date and time collected

- Sample number
- Sample location
- Analyses to be performed

Samples will be preserved, as appropriate for the analytical method, packaged according to EPA sample handling procedures, and will be packed in a cooler maintained at 4 °C ± 2 °C (39 °F ± 3.6 °F) immediately after collection unless specified otherwise in the SAP. Samples will not be held in excess of specified holding times in accordance with the SAP.

Because the samples will be collected from radiation zones, the samples will be checked by a radiation control technician prior to removal from the RPP-WTP or shipment to the laboratory. A dose assessment will be conducted for those sampling activities occurring in radiation zones. The dose assessment will be used to develop a plan to keep doses ALARA during sampling activities. This assessment will be performed in a manner that will not compromise the validity of the sample.

Seals on the sample containers, and on the sample shipment coolers, will be used to prevent and/or detect tampering with samples between the time of collection and the beginning of analysis. Seals will be applied to the sample containers and coolers before leaving the sample location. The seals will be attached in such a manner that the seal will be broken to open the container.

Chain-of-Custody Record

Ensuring the integrity of the samples, from collection through analysis to final disposition, will be accomplished by utilizing documentation, in the form of a chain-of-custody record, to trace sample possession and handling history of people having custody of the sample.

The chain-of-custody record will be completed and will accompany samples from collection to analysis. Multiple copies of the record will be required, and the sampling supervisor will maintain at least one copy

Samples will be tracked in the chain-of-custody record and will remain under one of the following conditions:

- In a person's physical possession
- In view, after being in physical possession
- Secured so that it cannot be tampered with, after having been in physical custody
- Placed in an area restricted to authorized personnel

The following information will be included in the chain-of-custody record:

- Sample number
- Date and time collected
- Medium sampled
- Sample type, grab or composite
- Analyses to be performed
- Number of containers
- Contractor's name
- Collector's signature
- Signature of person receiving possession
- Inclusive dates of possession

- Condition of samples on receipt

Sample Quality Control (QC)

Sample QC procedures will be followed, including proper implementation of the sample labeling, sample sealing, and chain-of-custody completion described in the preceding paragraphs. Field QC sampling described in this section will also be followed. Sample QC procedures will be implemented to adequately control sampling activities.

Field QC will be accomplished through the use of various sample duplicates and blanks. The QC samples will be collected once a day or once every 20 samples, whichever is greater.

Duplicate samples are two separate samples taken from the same sampling point in the field and placed into separate containers. The duplicates will be used as an indication of the field homogeneity and repeatability of the analytical data.

Equipment blanks serve as a check on sampling device cleanliness. Equipment blanks consist of a sealed container of distilled water that is transported to the site, opened in the field, poured over or through the sampling collection device that has been decontaminated, and then is collected in a sample container and returned to the laboratory for analysis. The analytical results from the blanks will be used to assess the adequacy of sampling device decontamination procedures. This assessment is made during data validation. Equipment blanks will be collected daily and analyzed for the same analytes as the samples collected that day.

Field blanks consist of pure deionized water that will be transferred to a sample container at the site and preserved appropriately. Field blanks are used to check for possible contamination originating with the reagent or the sampling environment, and will be collected daily.

Data Quality

Quality of samples will be ensured through the collection of field QC samples and through strict adherence to sample labeling, sample sealing, and chain-of-custody procedures. Data quality will be ensured by adherence to the analyte-specific requirements for precision, accuracy, completeness, and representativeness that will be prescribed in the SAP. The laboratory performing the analyses will be required to meet these specific quality assurance objectives in the SAP, in addition to meeting the guidelines of their Quality Assurance Plan. The QC of records and documentation will be accomplished by following procedures outlined in US EPA SW-846, as amended. Sampling and analysis records will be kept on file, including the following:

- Field notes
- Chain-of-custody records
- Daily memoranda
- Laboratory results
- Quality assurance
- Data validation results
- Records of meetings
- Activities concerning the sampling program

Evaluation and Reporting of Data

Analytical results from the RPP-WTP sampling will be compiled, evaluated, and summarized in the following manner:

- Evaluate the QC of the sample handling and sample analyses to assess the reliability of the data.
- Conduct the statistical evaluation of the analytical data.
- Examine results for comparison with accepted regulatory standards on an indicator constituent-by-indicator constituent basis.
- Prepare summary statistics for indicator constituents.
- For each constituent identified, compare the sample results with the established designation limit and/or soil cleanup levels, and, for soil, with the established background levels for soils. Sample concentrations below background but above risk-based closure levels may be proposed as adequate demonstrations of clean closure, pending Ecology approval.
- Prepare a report that includes data analysis and assessments that evaluate whether the levels of various indicator constituents present a health or environmental concern, and whether they meet the clean closure performance standard. The report will include sample locations, number of samples, specific methods used for collection, and any differences in procedures or sample locations from those provided in the revised closure plan and the SAP. The report will provide clean closure evaluations. Each report may address only a single sample or a large group of samples. A single unit at the RPP-WTP may require several sampling campaigns and iterative reports, while other units will require no sampling.

Safety Procedures and Equipment

Safety procedures will be detailed in a site-specific health and safety plan that will be included in the revised closure plan to be submitted to Ecology prior to initiation of closure activities. A detailed safety review of the closure tasks and personnel will also be conducted during closure planning immediately prior to beginning the closure activity. Personnel performing closure activities, including sampling, will wear personal protective equipment (PPE), as required, to prevent exposure to hazardous materials and dangerous and mixed waste constituents. In addition, safety equipment appropriate to the task will be employed, such as supplied air or respirators, hearing and eye protection, and splash suits.

Additional information will be provided in this section. Final drafts of this information will be provided in the revised closure plan to be submitted prior to closure:

- Health and safety plan
- Details on sampling equipment
- COC indicator parameters for decontamination solution analyses
- Analytical methods that deviate from SW-846, if any
- Sampling and analysis plan

11.3.4.2. Sampling to Confirm Decontamination of Structures and Soil [I-1b(4)(b)]

Sampling of decontamination solutions may be conducted for equipment, structures, and debris that do not meet the clean debris surface standard following the decontamination process. This sampling will serve to define the extent of remaining contamination and confirm adequate decontamination of equipment, structures or debris. The sampling process will be repeated after each subsequent round of decontamination effort until the decontamination effort is either determined to be successful, or is terminated, and the contaminated component is removed and disposed as dangerous or mixed waste.

Soil found to be contaminated will be removed as part of the closure activities, and sampling will be performed to confirm that levels of contamination in the remaining soil do not exceed Ecology approved risk based soil cleanup levels.

11.4. Other Activities [I-1b(5)]

This section describes the procedures to be followed in order to comply with closure certification requirements, control run-on and runoff during closure, and to reuse equipment from the plant.

11.4.1. Certification of Closure

WAC 173-303-610(6) requires that within 60 days of completion of closure of each dangerous waste unit, a closure certification will be submitted to Ecology. Because of the integrated nature of the tank and miscellaneous unit systems, and the large number of individual tank units in the RPP-WTP, the certification requirement is proposed to be modified. The modification will apply to the four main integrated structures:

- The pretreatment building
- LAW pretreatment building
- The LAW vitrification building
- The HLW vitrification building

The four separate individual waste storage buildings will be included in the HLW building certification. The four certifications will attest that the closures of the RPP-WTP dangerous or mixed waste units in each building were performed in accordance with the approved closure plan.

Following completion of closure, DOE, or the DOE-selected contractor, and an independent Washington State registered professional engineer will submit certifications, that the mixed waste units have been closed in accordance with the approved closure plan, to the Hanford Permit Coordinator at the following address:

Washington State Department of Ecology
Kennewick Office
Attn: Hanford Permit Coordinator
1315 W. 4th Avenue
Kennewick, WA 99336-6018

The following documentation will be prepared to support the closure certification, and will be provided to Ecology on request:

- Field notes related to closure activities

- A description of deviations from the approved closure plan and justification for these deviations

- Documentation of the final disposition of dangerous wastes and dangerous waste residues, including contaminated media, debris, and treatment residuals

- Laboratory and field data, including quality assurance/quality control data, for samples and measurements, including samples and measurements taken to determine background conditions and/or to determine or confirm clean closure

- A summary report that itemizes the data reviewed by the independent registered professional engineer and tabulates the analytical results of samples taken to determine or confirm clean closure

A draft decontamination documentation checklist and an example closure certification statement are provided in Figure 11-5 and Figure 11-6, respectively.

11.4.2. Run-on and Runoff Control

No runoff or run-on resulting from precipitation or surface water flows is anticipated in the areas undergoing closure. The RPP-WTP dangerous waste management units are enclosed within highly secure reinforced concrete and steel frame buildings, with the exceptions noted below. Wash water or other liquids resulting from decontamination activities will be contained by RPP-WTP containment structures-floors, walls, ceilings, sumps and catch tanks.

The only units that may be exposed to direct precipitation are the three LPP condensate tanks. The miscellaneous dangerous waste, central waste and two melter storage buildings are separate freestanding units, and run-on/runoff control must be assured for these units before and during operation of the RPP-WTP, as well as during the closure period. There will be no changes in the containment capacities or runoff control design for these units during closure activities.

The RPP-WTP site drainage control plan is under development, and will be provided before the start of operations. The drainage control plan will demonstrate that the process structures, and particularly the four separate stand alone container storage units and the LPP condensate tank system, will be adequately protected against run-on or direct precipitation, and runoff will be controlled, from at least the 25-year 24-hour precipitation. Refer to Supplement 8 for details of the information completion schedule.

11.4.3. Equipment Reuse

Equipment may be decontaminated and reused during or after closure, if practicable. For example, contaminated material and handling equipment such as melter cave containment and shield doors, cranes, and power manipulators may be decontaminated in order to reduce radiation dose rates. This will allow initial or repeated personnel entry to areas where additional decontamination, debris size reduction, or packaging and encapsulation activities will be conducted. Equipment described in sections 11.3 and 11.6 will be decontaminated using methods selected from those specified under 40 CFR 268.45 or equivalent technologies.

Criteria for determining whether equipment will be reused or disposed include the following:

- Degree of contamination

- The need to minimize potential worker radiation and dangerous waste exposures during decontamination; the amount of decontamination residues that would be generated

- The value of the equipment

- Compliance with the approved schedule and budget

Equipment that could be used by DOE in future operations at the RPP-WTP site, in other Hanford projects, or at different DOE facilities, may be given priority.

11.5. Maximum Waste Inventory [I-1c]

The estimated maximum mixed waste inventory for each type of waste management unit is listed in Table 11-1. These are total storage capacity volumes from the RPP-WTP Part A form in Chapter 1.

The actual volumes present at the start of the closure period will be much less than values shown in the table. For example, the containment buildings and container storage areas may be empty or nearly empty on the date of completion of treatment of the final volume of waste feed, and the tank systems are not likely to contain more than a few percent of the maximum capacity.

11.6. Closure of Tank, Container Storage, Containment Building and Miscellaneous Units [I-1d]

This section of the closure plan identifies specific closure requirements for each type of unit at the RPP-WTP, and describes the removal of wastes and equipment, decontamination of the unit, and disposition of decontamination residues. A summary of the closure standards and activities for each type of unit is provided in Table 11-2.

The performance standards and closure activities for many of the unit components are similar or identical for the four types of units, as indicated in the table. Differences in the detailed closure procedures will be due in part to variations in unit design, and different ancillary equipment present in various units, even in units of the same type. Differences in procedures are also mandated by great variations in radiation dose rates in different units. In the HLW melter cave and most tank secondary containment areas, initial decontamination activities will be performed remotely, while the same types of activities may be performed by personnel in most of the container storage units.

An overall estimate of the volume of closure wastes to be generated has not been prepared, due to the large uncertainties regarding final disposition of the RPP-WTP equipment and structures. The volumes of wastes that will be generated may be relatively large if most of the tanks, piping and related equipment, and major portions of the concrete and steel structures are removed and disposed as waste. Volumes of waste may also be large if the same equipment and structures are completely decontaminated, resulting in large amounts of secondary residues, personnel protective equipment and decontamination solutions. The volume of immobilized waste that will be generated during the closure period depends in part on the composition of the final batch of waste feed, which cannot be predicted at this time. One component of closure is the flushing of tank systems during deactivation operations. Flushing is estimated to generate as much as 6.4 million gallons of dilute wastewater, which will be concentrated and treated into approximately 14,000 gallons of immobilized waste glass.

11.6.1. Closure of Tank Systems

Tank systems will be decontaminated using chemical and/or physical extraction technologies. Types of tank systems that will be decontaminated include but are not limited to the following:

- LAW and HLW feed and storage tank systems
- Evaporators and condensers
- Waste filtration tanks
- Ion exchange tanks
- Condensate tanks

Types of ancillary equipment which may be decontaminated include, but are not limited to the following:

- Waste transport, rinse and washdown piping
- Pumps, agitators, wash rings, and ejectors
- Air, steam, and water lines in secondary containment areas

Decontamination of tank systems including tanks, piping and other ancillary equipment will be conducted using chemical extraction technology, "water washing and spraying." High-pressure steam or other physical extraction technologies identified in section 11.3.3 will also be used to remove contamination if necessary. The decontamination procedures for closure of tanks will include, but not be limited to, the following:

- Tank systems will be flushed after the final batch of bulk waste has been processed through that tank system. Large volume flush solutions will remove as much waste as possible before smaller scale decontamination work begins. Flush water will be transferred to the LAW pretreatment evaporation and ultrafiltration systems, and the concentrates will be sent to the HLW melter for vitrification, if the HLW vitrification system is operating. (If either or both vitrification systems will not be operating during the first phase of the closure period, this closure plan will be revised to account for changes in treatment and disposal of waste feed and flushing wastes, as necessary.) Water condensate from the evaporator will be routed to the LERF/ETF. The HLW melter will be shut down after flushing wastes are treated. Tank decontamination activities to be performed after completion of flushing may involve any of the chemical or physical extraction technologies identified in section 11.3.3. Used decontamination solutions will be transferred to the LERF/ETF or another permitted TSD facility.

- Physical evidence of contamination in the containment systems may be used in addition to the operating record, to determine whether decontamination of the exterior of a tank system is needed. Before using decontamination solutions on the outside of a tank, the floor and wall liners will be inspected for cracks or other breaches. The cracks will be sealed before beginning decontamination treatment or other engineered containment devices such as collection basins will be used to collect and contain solutions. The outer tank surface then will be cleaned with water or detergents, or other technologies as necessary, and rinsed. Decontamination of secondary containment of these units will be similar or identical to the procedures used for container storage and containment building units.

- After the tanks are decontaminated, the tank interiors may be inspected using CCTV cameras to determine compliance with the clean debris surface standard. Because of possible radiation exposure,

- visual inspection of the process cells may be performed remotely using a camera with zoom lens, or using another device that allows verification that the standard is met. Inspections will be documented in an inspection record.

- The outside of the tanks also will be inspected for compliance with the clean debris surface standard, and inspections will be documented in an inspection record.

- If tanks or ancillary equipment cannot be determined by visual inspection to meet the clean debris surface standard, the tanks may undergo further decontamination, or rinsate samples may be obtained to determine if the decontaminated tank meets the designation limit performance standard for clean closure. Before or after decontamination efforts, a tank system may be designated as dangerous waste, removed, reduced in size, packaged, treated by encapsulation, and sent to a permitted disposal facility.

- Decontamination residues will be collected, designated, and transferred to a permitted disposal facility.

The decontamination procedures for piping and ancillary equipment will include, but will not be limited to, the following activities:

- The facility design and process information, in combination with operating records, will be used to identify the equipment associated with mixed waste and mixed waste constituents. Piping that may have carried mixed waste or may have become externally contaminated with mixed or dangerous waste will undergo decontamination. Contaminated piping may include waste transfer piping, sump contents transfer piping, nitric acid transfer piping, and other piping associated with waste treatment and secondary waste transfer.

- The piping will undergo bulk flushing at the same time as the tanks are flushed. Flushing of the pipes and other ancillary equipment will remove the bulk volumes of waste, leaving adhered or attached quantities of waste.

- Chemical and/or physical extraction technologies may be used to attempt to remove the remaining waste from piping and other ancillary equipment. Where it is not possible to visually verify that the clean debris surface standard has been met, verification that the closure performance standard is met may be attempted by rinsate sampling, analysis, and comparison of analyses with designation limits.

- If it is not possible to meet the clean debris surface standard or designation limits, contaminated portions of the piping and ancillary equipment will be removed, designated as dangerous waste, packaged in waste containers, transferred to the CWC or another permitted unit, encapsulated, and disposed at a permitted landfill disposal unit on the Hanford Site. Encapsulation may be performed at the CWC or elsewhere.

11.6.2. Closure of Container Storage Areas

Following removal of containers, it is unlikely that the main pre-shipment ILAW and IHLW container storage areas will be significantly contaminated, due to requirements for ensuring the integrity of container or canister closures (welded lids) and decontamination of the containers prior to placement into storage, during operation of the RPP-WTP. The other container storage units will be used to manage wastes with much lower concentrations of wastes, in containers that will be opened rarely, if ever, while in storage. (Containers in the non-mixed miscellaneous dangerous waste container storage area may be exceptions to this rule.) Ancillary equipment for manipulating containers and handling wastes or debris generated during operation will be different from one container storage area to the next. Closure activities may

therefore vary widely among container storage areas due to these factors. See section 11.3 for additional discussion.

After removal of wastes, the liners or cladding will be inspected. Observation of potential or apparent liner breaches may require sealing of the suspected breaches such as cracks prior to decontamination of equipment and of the intact portions of the liners. Inspection criteria and activities are addressed in sections 11.2 and 11.3.

Equipment and the liners will be decontaminated to meet the clean debris surface standard or designation limits, as appropriate. The standards and activities to be performed to meet the designation limits, and the requirements for disposal of wastes, decontamination solutions, and solid residues are described in sections 11.2 and 11.3.

Liner breach investigations and concrete decontamination, if necessary, will be performed as described in section 11.3.3.1, to meet the standards described in section 11.2.2. If liner breach investigations are required, some repetition of decontamination operations may be necessary where liner segments, concrete and perhaps soil are removed.

The miscellaneous secondary waste container storage areas are not equipped with cladding. Four of these units are separate, freestanding structures; the dangerous waste, central waste, and two melter storage buildings. Each unit will be evaluated for historical spills or other releases of dangerous or mixed wastes, by review of the facility operating record and by visual inspection. If the record review and inspection support the conclusion that no releases of waste to the floor occurred, no further decontamination or sampling work will be required for that unit. If either the inspection or record review indicate that waste releases to the floor of a unit occurred, decontamination will be required. If the protective coating is intact, chemical extraction treatment may be performed. If the coating is cracked or more severely damaged, physical extraction treatment will be required, to remove at least 0.6 cm from the original surface. If the extent of the historical releases- the actual location(s) on the floor- cannot be determined, the entire floor surface will be treated. If the resulting surface cannot be documented as a clean debris surface, the treatment may be repeated or the full thickness of the floor may be removed. The solid residues or rubble produced by treatment or removal will be disposed as dangerous waste, unless sampling and analyses are performed to support a request for an Ecology determination that the rubble is not dangerous waste.

Through-thickness cracks or other loss of integrity, if found in concrete floors that rest directly on soil, in units where releases are documented or suspected, may require that a soil contamination investigation will be performed. Examples of adequate evidence that a release may have occurred include discoloration or staining of the concrete, odor, or elevated radiation readings observed during the initial closure inspection. Soil and possibly concrete samples will be obtained by coring in the vicinity of known or suspected waste releases. Soil contaminated at concentrations above the risk-based soil cleanup levels will be removed, and confirmation samples will be taken at the limits of the excavation to confirm adequate removal. If analyses are less than the Hanford soil background levels but greater than the risk-based soil cleanup concentrations, a request for approval of a clean closure determination will be submitted to Ecology. The request will be supported with the analytical and other pertinent data for that unit.

If soil contamination is so extensive that the zone of contamination cannot be practically removed, or if groundwater contamination could result, the closure plan will be revised to provide for additional investigation and measures to address corrective action requirements.

Decontamination documentation will be prepared as described in sections 11.3.4 and 11.4.1.

11.6.3. Closure of Containment Building Units

One containment building unit, the pretreatment plant containment building unit, will be used for decontamination, size reduction and packaging operations throughout the operating life of the RPP-WTP. It may be used for these same functions during the closure period. The HLW melter (cave) containment building may be used for similar operations during closure, after the normal melter operations have been completed. In particular, the HLW melter containment building may be used to partially decontaminate and overpack failed HLW melters that were stored in the failed melter storage building during the operating life of the plant.

After completion of operations to facilitate closure of other units, the melters and associated spent parts, feed apparatus, and offgas control equipment will be removed. The containment buildings will be closed in the same manner, following the same inspection, decontamination, and documentation requirements identified in sections 11.6.1 and 11.6.2 for tank system containment areas and container storage units. Several significant differences in design and waste types will result in substantially longer time requirements for closure of the units, as compared to container storage units. For example, most operations in the HLW melter cave will be conducted with remotely operated equipment, until the final decontamination stages are reached. The ILAW container finishing line and container fixative units are also larger and contain more equipment than most of the container storage units. Complex remote operations are necessarily slow, and the full extent of necessary decontamination, size reduction and packaging work will not be known until the final stages of closure.

Other containment building units are more similar to container storage units, including coated concrete rather than clad floors and walls. These containment buildings will be closed in the same manner as the container storage units (section 11.6.2), with the added complications of various types of waste handling equipment such as power manipulators, cranes, and the LAW LSM units.

11.6.4. Closure of Miscellaneous Units

The HLW and LAW melters are miscellaneous units. Several times during the life of the RPP-WTP, spent or failed melters will be removed from the HLW melter cave and LAW LSM gallery containment buildings, and may be placed in the melter container storage units. Removal and replacement of spent and/or failed melters is not considered closure. One or more of the LAW melters may actually be removed and not replaced, before the start of the closure period. The HLW melter is planned to be operating during the deactivation period, the first part of the closure period. If necessary, the HLW melter may be removed and replaced during the closure period to provide treatment for the residues from tank system flushing operations. Such removal and replacement would not be considered closure, although it may occur during the closure period.

LAW melter operating equipment openings will be closed, the exterior surfaces decontaminated, then the melters will be removed from the LAW melter gallery as intact assemblies, encapsulated, and shipped to the LLBG or another permitted disposal unit. Melters may be stored in the melter storage buildings, during the closure period, while treatment, transport and disposal operations are arranged. HLW melters may be partially decontaminated and packaged in an overpack in the HLW melter cave during the final phases of closure activities. Failed HLW melters in a melter storage building, if any are present, may be returned to the HLW melter cave for partial decontamination and packaging. Both types of melters will be treated in accordance with the immobilization treatment standard and disposed at permitted mixed waste disposal facilities.

Removal of melter components will be accomplished according to standard procedures for the operational period of the plant. Special HLW melter closure activities such as size reduction, decontamination of components, or packaging of components and decontamination residues, may require development of new procedures or installation of new equipment. These activities cannot be fully predicted at the current stage of design, and some uncertainties will remain even at the start of the closure period.

The encapsulation treatment design is still under development. Additional information will be provided in this section, before the start of closure. Information to be provided includes details of encapsulation treatment locations, equipment and materials.

11.7. Schedule for Closure [I-1f]

For the purposes of this dangerous waste permit application, the design life of the RPP-WTP is estimated at 40 years. The estimated three year schedule for closure is provided in Figure 11-7.

The Director of Ecology will be notified at least 45 days prior to the expected date of the start of RPP-WTP closure. The date closure is expected to begin is no later than 30 days after completion of vitrification processing of the final volume of waste feed from the DST System unit. The date of receipt of the "final volume" of bulk waste feed in the melters, and various other specific individual units within the RPP-WTP, will be at the end of the processing of that final batch of waste feed. This date will roughly correspond to the date of the start of deactivation operations. The LAW pretreatment plant and HLW feed preparation and melter systems will continue to operate for several months after the start of the closure period. The plants will be processing the tank system flush solutions and producing immobilized waste glass containing most of the residual waste constituents left in the tanks at the start of the closure period.

The year the RPP-WTP closes will depend on the time required for the initial portion of the tank waste inventory to be processed, the degree of success in this mission, and whether BNFL Inc. will continue to operate the RPP-WTP to process the remaining Hanford Tank Waste inventory. Other factors that could affect the year of closure include changes in operational requirements, lifetime extension upgrades, a different operating contractor, and other unforeseen factors.

This closure schedule is necessarily general, and is not meant to be definitive. For example, completion of decontamination of the pretreatment building and residue removal is shown at approximately 13 months after the start of the closure period. However, decontamination of the LAW and HLW vitrification plant tanks and other units is expected to require use of pipelines through the LAW pretreatment plant to transfer decontamination solutions and rinsates to the LERF/ETF. Therefore, the final decontamination of piping and collection tanks in the LAW pretreatment building may not be completed until after the LAW and HLW vitrification plant tanks and other units are decontaminated.

A more specific schedule will be provided in the revision of this closure plan prior to the start of closure activities. The revised schedule will take advantage of final design and operating procedure information that is not available at this time. The schedule for closure will include a breakdown of activities to be performed after the date of completion of vitrification processing of the last batch of waste feed from the DST System unit.

11.8. Extension for Closure Time [I-1g]

The following discussion addresses the extension of the waste removal and closure time periods, as specified in WAC 173-303-610(4)(a) and (b), respectively.

The need for more than 90 days to remove wastes and more than 180 days to complete closure activities is anticipated. This is due in part to the high radiation fields in many of the waste management units, even after the entire bulk waste inventory has been processed and the residues (the inventory present at the start of the closure period) are removed by flushing. Processing of the final batch of waste feed may require approximately nine months of operation at or near design capacity of the plant, prior to the start of deactivation and closure work. As explained in section 11.7, these processing operations will be completed, or nearly completed, at the start of the closure period.

Small volumes of waste residues may still exhibit extreme radioactivity and hazardous radiation dose rates. This fact will require much of the closure work to be performed, of necessity, by remotely operated equipment. The large number of units and extensive integrated ancillary equipment such as piping, valves, filters, mostly welded together, and the need to coordinate closure activities with other TSD units both at Hanford and off-site, will require more time for closure than for a typical dangerous waste management facility.

The decontamination operations described in this closure plan are intended to avoid excessive secondary waste generation and to provide for recycling of some pieces of equipment, and will include extensive use of chemical and physical decontamination treatment technologies. Incineration is not included as an option for any wastes to be generated during closure. Solidification, encapsulation and landfilling of dangerous and mixed wastes will be deliberately minimized when this closure plan is implemented. The volumes of wastes that will be disposed will also be minimized to the extent practical by physical size reduction. Size reduction will allow packaging of large tanks, pipe, and support structures in relatively small, densely packed drums or waste boxes. This approach is illustrated in the accompanying unit decontamination and waste handling plans. These waste management priorities are emphasized to support this request for extension of the waste removal and closure periods, as suggested in section 4.1 of the Ecology *Guidance for Clean Closure of Dangerous Waste Facilities* (Ecology Publication 94-111).

The RPP-WTP operator will take the actions necessary to prevent threats to human health and the environment from the unclosed but not operating RPP-WTP, including compliance with applicable permit requirements. During the first several months of the closure period, a large portion of the plant will be operating to remove waste residues from the tank systems to the maximum practical extent. Flushing, vitrification and other deactivation activities will require continued security and monitoring of all other "not operating" portions of the plant, and no part of the plant will be unsecured or abandoned during the closure period.

If necessary, an extension of the 3-year closure schedule will be requested and the need for the extension demonstrated in accordance with WAC 173-303-610(4)(a) and (b).

Condition II.X.1 of the Hanford RCRA Permit requires the Permittees to notify Ecology in writing, as soon as possible, of any deviations or expected deviations, from the schedules of the Permit. The Permittees shall include with the notification information supporting their claim that they have used best efforts to meet the required schedules. If Ecology determines that the Permittees have made best efforts to meet the schedules of the Permit, Ecology shall notify the Permittees in writing by certified mail that the Permittees have been granted an extension. Such an extension shall not require a Permit Modification under Condition I.C.3. Should Ecology determine that the Permittees have not made best efforts to meet the schedules of the Permit, Ecology may take such action as is deemed necessary. Copies of correspondence regarding schedule extensions shall be kept in the Operating Record.

Condition II.X.2. of the Hanford RCRA Permit provides that any schedule extension granted through the approved change control process identified in the Hanford Federal Facility Agreement and Consent Order

shall be incorporated into the permit. Such a revision shall not require a Permit Modification under Condition I.C.3.

11.9. Closure Cost Estimate [I-1h]

TSD facilities located at the Hanford site are exempt from the closure cost estimate requirements of WAC 173-303-620, in accordance with Condition II.H.3 of the Hanford RCRA Permit. However, Condition II.H.1. of the RCRA Permit requires submittal of an annual report updating projections of anticipated costs for closure.

The projection of anticipated costs will be based on the closure activities described in sections 11.3 and 11.4. The projection of anticipated cost will be submitted during the first October following issuance of the final RPP-WTP modification to the Hanford RCRA Permit. The cost projection will be updated annually, in accordance with condition II.H.1 of the Hanford RCRA Permit.

Figure 11-1. Closure Strategy Flowchart for Tank Systems

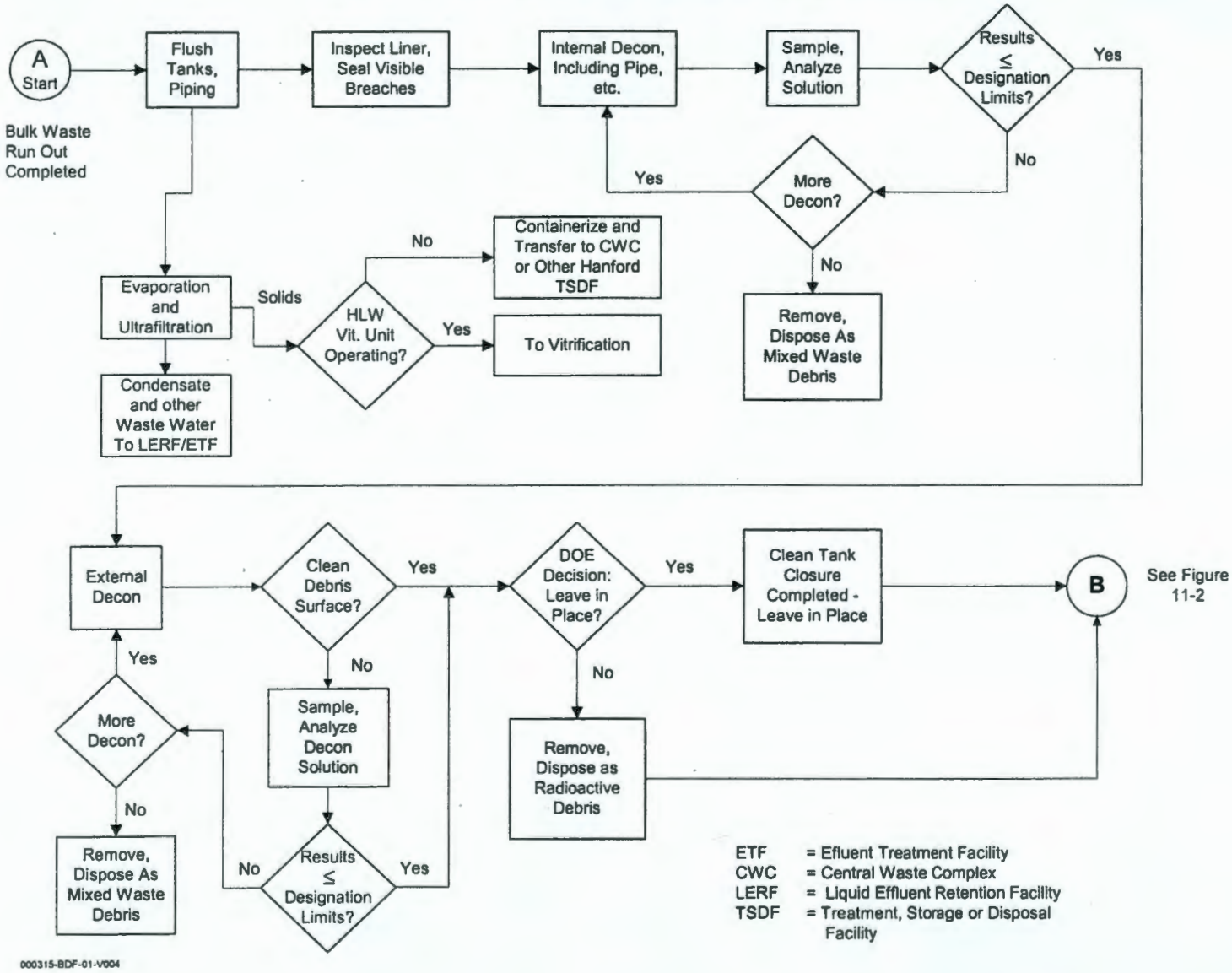

Figure 11-2. Closure Strategy for Container Storage, Containment Building, Miscellaneous Unit and Tank System Containment Areas

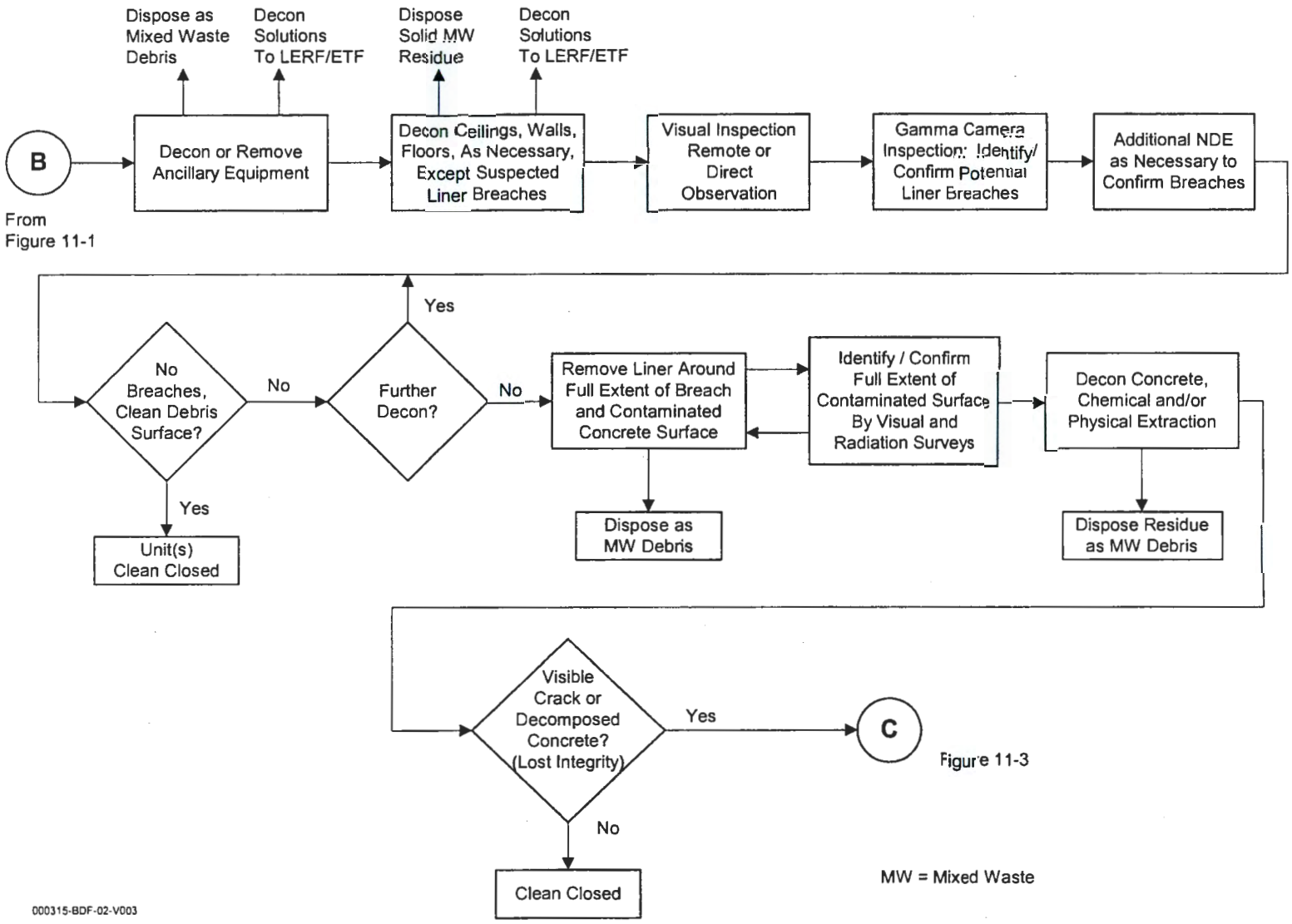

Figure 11-3. Closure Strategy Flowchart for Soils/Groundwater

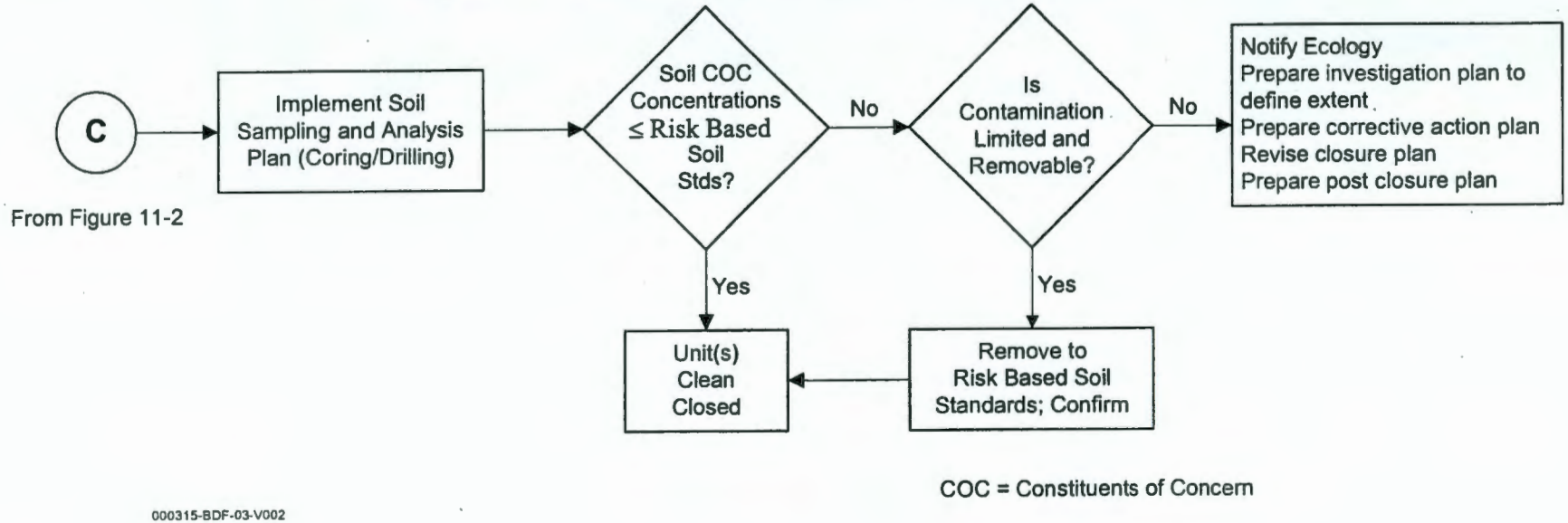

Figure 11-4. RPP-WTP Permitting, Deactivation and Closure

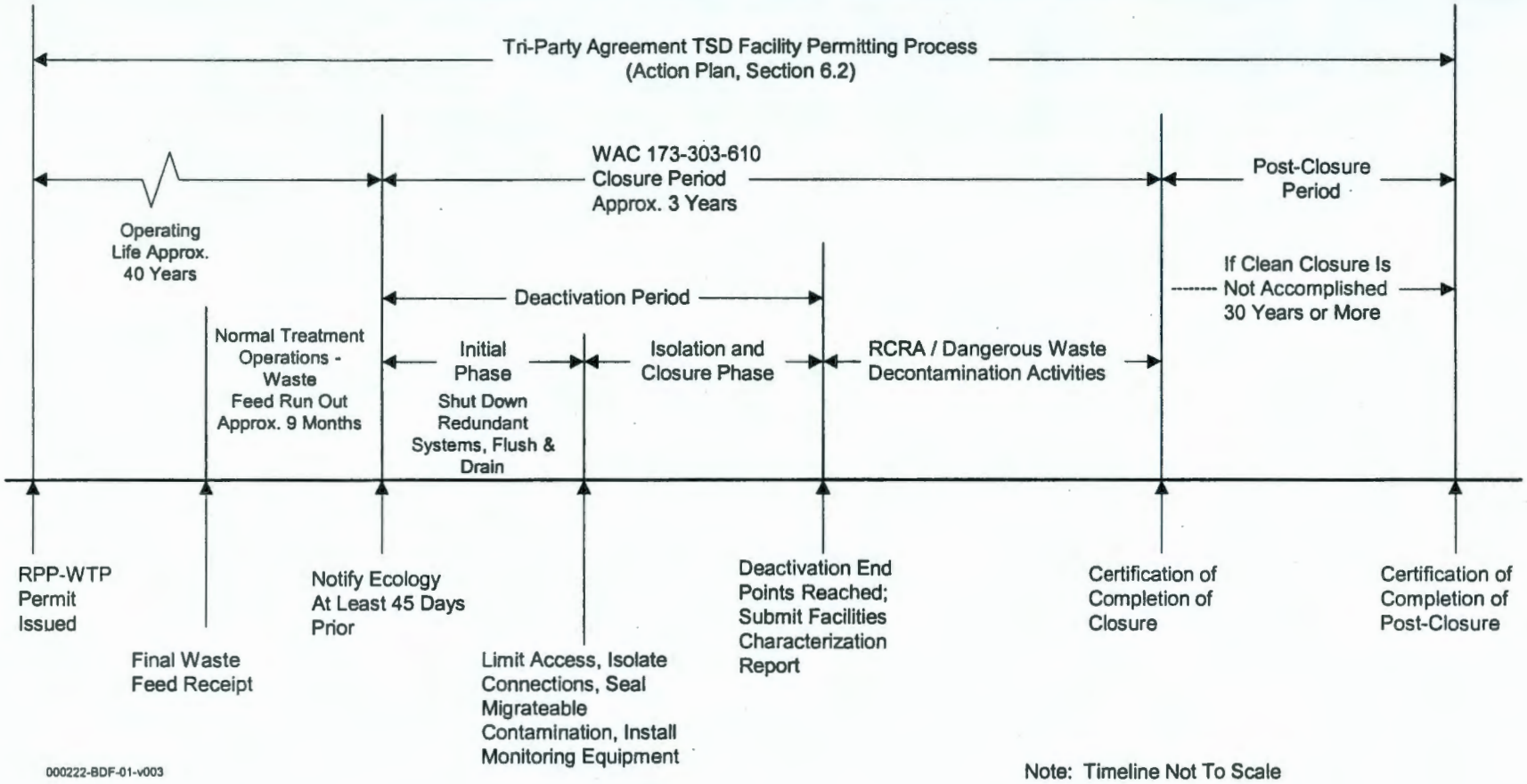

Figure 11-5. Sample Clean Debris Surface Checklist

DECONTAMINATION CHECKLIST

This checklist is intended to document decontamination work and the attainment of a clean debris surface for the following components, structures, and materials.

1. Building/location: _____
2. Component(s)/Area(s): _____
3. Material (e.g., concrete, metal): _____
4. Decontamination/Treatment Method[1]: _____
5. Decontamination/Treatment Parameters:
   a. Temperature _____
   b. Propellant _____
   c. Solid Media (e.g., shot, grit, beads) _____
   d. Pressure _____
   e. Residence time _____
   f. Surfactant(s) _____
   g. Detergents _____
   h. Grinding/striking media (e.g., wheels, piston heads) _____
   i. Depth of surface layer removal (cm) (e.g., for concrete) _____
   j. Other _____

The decontamination of the components/areas/materials identified in steps 1 through 3 was completed as specified at steps 4 and 5.

_____ _____ /_____
Title Signature Date

6. Performance Standard:

I have visually inspected the above-identified material before/after (circle one) decontamination/treatment in accordance with the closure plan. Dangerous waste residues have/have not (circle one) been removed to attain a clean debris surface[2].

Authorized Representative: _____ /_____

Signature Date

Notes:

1. Decontamination treatment will use a chemical or physical extraction method from Table 1, Alternative Treatment Standards for Hazardous Debris (40 CFR 268.45).
2. Clean debris surface as defined in Table 1, Alternative Treatment Standards for Hazardous Debris (40 CFR 268.45): "'Clean debris surface' means the surface, when viewed without magnification, shall be free of all visible contaminated soil and hazardous waste except that residual staining from soil and waste consisting of light shadows, slight streaks, or minor discoloration's, and soil and waste in cracks, crevices, and pits may be present provided that such staining and waste and soil in cracks, crevices, and pits shall be limited to no more than 5% of each square inch of surface area."

Figure 11-6. Example Closure Certification Statement

CLOSURE CERTIFICATION
FOR

_____

River Protection Project – Waste Treatment Plant
Hanford Site
US Department of Energy, Richland Operations Office

We, the undersigned, hereby certify that _____ closure activities were performed in accordance with the specifications in the approved closure plan.

_____ _____
Owner/Operator Signature RL Representative Date
(Typed Name)

_____ _____
Contractor Representative (Typed Name) Date

_____ P.E.#: _____ State: _____ _____
Signature Independent Registered Professional Engineer **Date**
(Typed Name, Washington State Professional Engineer license number, and date of signature)

1

Figure 11-7. Closure Schedule for RPP-WTP

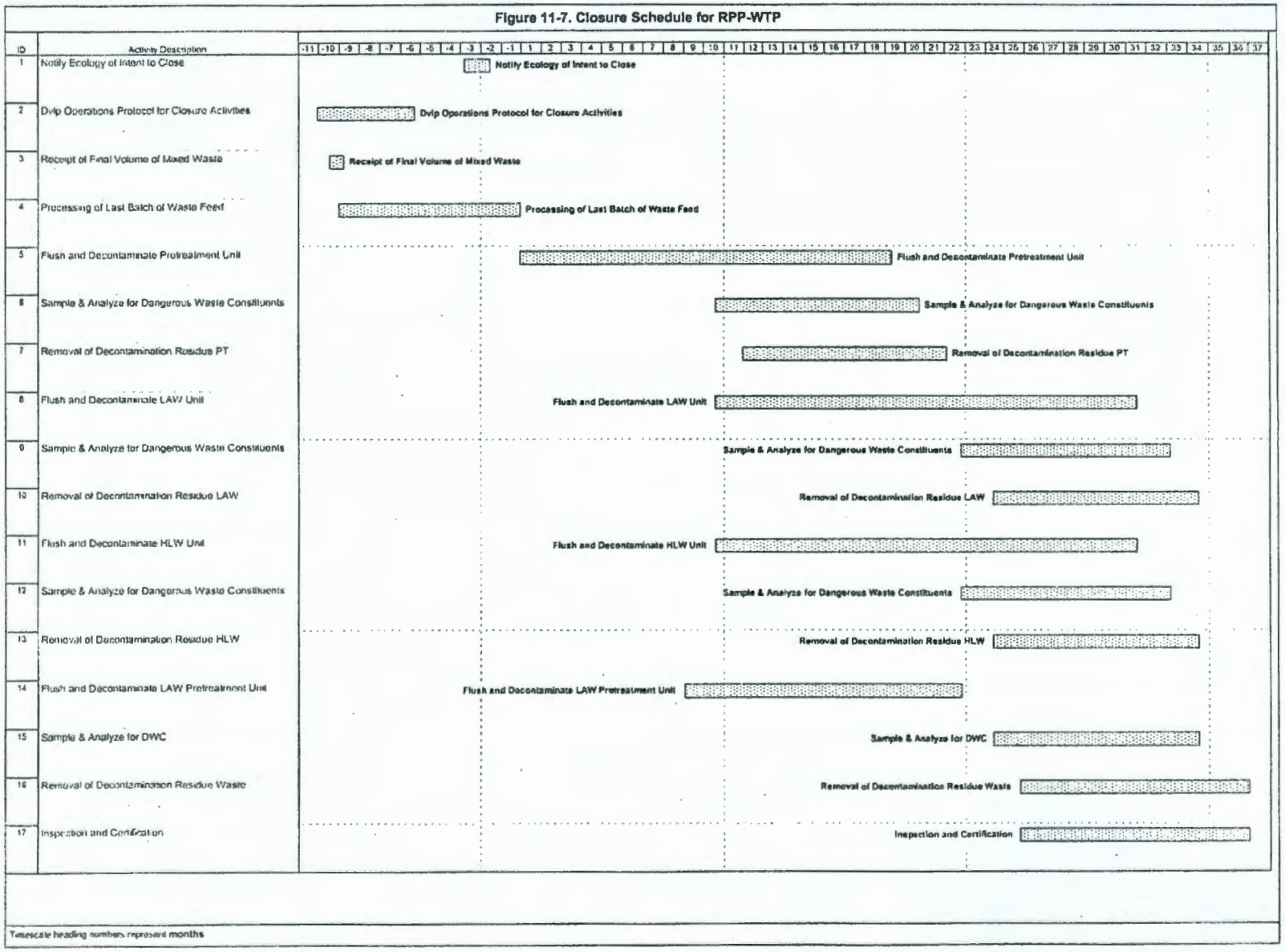

Table 11-1. Maximum Waste Inventory

Waste Management Unit	Maximum Inventory[a]
Total container storage	1,830,455 gal
Total tank storage	6,004,830 gal

[a] Miscellaneous (melter) and containment building units are not counted, as they will be processing the volumes previously stored in tanks, and producing treated and secondary wastes that are included in the container storage total.

1

Table 11-2. Clean Closure Performance Standards and Activities

Unit Type	Components	Performance Standards	Closure Activities
Tank System	Exterior surfaces Interior surfaces Ancillary equipment Secondary containment	Clean debris surface, designation limits, or removal	Extraction technologies or removal of tanks Liner and concrete decon and/or removal
Container Storage Area	Floor, walls, and ancillary equipment	Clean debris surface, designation limits, or removal	Extraction technologies Liner and concrete decon and/or removal
Containment Building	Floor, walls, and ancillary equipment	Clean debris surface, designation limits, or removal	Extraction technologies Liner and concrete decon and/or removal
Miscellaneous (Melter)	Melters and ancillary equipment	Removal	Removal

2

Chapter 12

CONTENTS

12. Reporting and Recordkeeping 12-1

12. Reporting and Recordkeeping

The River Protection Project - Waste Treatment Plant (RPP-WTP) is subject to the reporting and recordkeeping requirements of *Dangerous Waste Regulations* (WAC 173-303), *Standards for Owners and Operators of Hazardous Waste Treatment, Storage and Disposal Facilities* (40 CFR 264), and *Land Disposal Restrictions* (40 CFR 268).

Descriptions of specific reporting and recordkeeping requirements applicable to treatment, storage and disposal units are located in the *Hanford Facility Dangerous Waste Permit Application, General Information Portion* (DOE-RL 1998). Not all of the requirements and associated reports and records identified in Chapter 12 of the General Information Portion apply to the RPP-WTP. Those that apply are as follows:

Record Type or Report Title	Record Type or Report Title
Quarterly notification of Class 1 modification notification	Closure and postclosure cost estimates
Monitoring and records	Onsite transportation documentation
Certification of construction or modifications	Annual noncompliance report
Anticipated noncompliance	Annual dangerous waste report
Transfer of permits	Annual land disposal restrictions report
Immediate reporting	Permit condition compliance evaluation
Release or noncompliance not requiring immediate reporting	Deed notification (reference only)
Written reporting	Inspection records
Waste transfer documentation discrepancy report (equivalent to "Manifest discrepancy report")	Closure certification
Waste tracking form discrepancy report	Notification of, or request for, permit modification
Other information	Closure plan deviation
Permit-related documentation	Engineering change notices and nonconformance reports
Notification of permit-related documentation	As-built drawings
Waste location	Equivalent materials
Waste analysis	Land disposal restriction records
Contingency plan and incident reports	Mapping methodology report and underground pipeline maps
Personnel training records	Schedule extensions
Preparedness and prevention arrangements	Waste minimization/pollution prevention

The RPP-WTP facility operating record (Hanford Facility Operating Record, unit-specific file) will be kept on Site or at the permittee's offices located in Richland, Washington.

Chapter 13

CONTENTS

13. Other Federal and State Laws [J] 13-1

13. Other Federal and State Laws [J]

Federal, State, and local laws applicable to the River Protection Project – Waste Treatment Plant (RPP-WTP) are discussed in the *Hanford Facility Dangerous Waste Permit Application, General Information Portion*, Chapter 13.0 (DOE-RL 1998). Generally, the laws applicable to the RPP-WTP include, but might not be limited, to the following:

Atomic Energy Act of 1954, as amended
Federal Facility Compliance Act of 1992, as amended
Clean Air Act of 1977, as amended
Safe Drinking Water Act of 1974, as amended
Emergency Planning and Community Right-to-Know Act of 1986, as amended
Toxic Substances Control Act of 1976, as amended
National Historic Preservation Act of 1966, as amended
Endangered Species Act of 1973, as amended
Fish and Wildlife Coordination Act of 1934, as amended
Federal Insecticide, Fungicide, and Rodenticide Act of 1975, as amended
Hazardous Materials Transportation Act of 1975, as amended
National Environmental Policy Act of 1969, as amended
Washington Clean Air Act of 1967, as amended
Washington Water Pollution Control Act of 1945, as amended
Washington Pesticide Control Act of 1971, as amended
New Source Construction Permits, as amended
Model Toxics Control Act, as amended
Benton Clean Air Authority Regulation 1, as amended
State Environmental Policy Act of 1971, as amended

Chapter 14

CONTENTS

14. Part B Certification [K] 14-1

14. Part B Certification [K]

I certify, under penalty of law, that this document and all attachments were prepared under my direction or supervision, in accordance with a system designed to assure that qualified personnel properly gather and evaluate the information submitted. Based on my inquiry of the person or persons who manage the system, or those persons directly responsible for gathering the information, the information submitted is, to the best of my knowledge and belief, true, accurate and complete. I am aware that there are significant penalties for submitting false information, including the possibility of fine and imprisonment for knowing violations.

4/25/00

RPP-WTP Owner/Operator
Maurice J. Bullock
Vice President, BNFL Inc.

Date

I certify on behalf of the Department of Energy, under penalty of law, that the Department of Energy owns the real property described herein, and I am aware of the contents of this permit application, and that I have received a copy of this application. As Manager, Richland Operations Office, US Department of Energy, I understand that I am responsible for complying with any requirements of Chapter 173-303 WAC with which only I am able to comply, and that there are significant penalties for failure to comply with such requirements.

4/25/00

Land Owner
Keith A. Klein, Manager
US Department of Energy, Richland Operations Office

Date

I certify on behalf of the Department of Energy, under penalty of law, that I am the Manager of the Office of River Protection, am aware of the contents of this permit application, and that I have received a copy of this application. As Manager, Office of River Protection, US Department of Energy, I understand that I am responsible for complying with any requirements of Chapter 173-303 WAC which only I am able to comply, and that there are significant penalties for failure to comply with such requirements.

4/26/00

Richard T. French, Manager
US Department of Energy, Office of River Protection

Date

CONTENTS

15. References 15-1

15. References

10 CFR 72.3. *Licensing Requirements for the Independent Storage of Spent Nuclear Fuel and High-Level Radioactive Waste*, as amended. Code of Federal Regulations.

40 CFR 261. *Identification and Listing of Hazardous Wastes*. Code of Federal Regulations.

40 CFR 264. *Standards for Owners and Operators of Hazardous Waste Treatment, Storage, and Disposal Facilities.* Code of Federal Regulations.

40 CFR 268. *Land Disposal Restrictions.* Code of Federal Regulations.

40 CFR 270. *EPA-Administered Permit Programs — The Hazardous Waste Permit Program*. Code of Federal Regulations.

AEA. 1954. *Atomic Energy Act of 1954*, 42 USC Sect 2011. US Congress, Washington D.C., USA.

AMSE. 1998. *Boiler and Pressure Vessel Code*, Section viii, Division 1, 1998 Edition. American Society of Mechanical Engineers, New York, New York, USA.

AASHTO. 2000. *AASHTO Transportation Policy Book.* American Association of State Highway and Transportation Officials, Washington D.C., USA.

BNFL. 1997. *Tank Waste Remediation System Privatization Project Permitting Plan*, BNFL-5193-EPP-01, Revision 0. BNFL Inc., Richland, Washington, USA.

BNFL. 1998a. *Notice of Intent to File TWRS-P Facility Dangerous Waste Permit Application*, BNFL-TWP-SER-001, Revision 1, 1 November 1998. BNFL Inc., Richland, Washington, USA.

BNFL. 1998b. *Basis of Design*, DB-W375-EG00001, Revision 0, 23 November 1998. BNFL Inc., Richland, Washington, USA.

BNFL. 1999a. *Work Plan for Screening Level Risk Assessment for the Tank Waste Remediation System-Privatization Project,* RPT-W375-EN00001, May 1999. BNFL Inc., Richland, Washington, USA.

BNFL. 1999b. *Environmental Performance Test Plan,* PL-W375-EN00003, Revision C, Draft 7, May 1999. BNFL Inc., Richland, Washington, USA.

BNFL. 1999c. *Quality Assurance Project Plan for the Environmental Performance Test,* QP-W375-EN00001, Revision C, Draft 7, May 1999. BNFL Inc., Richland, Washington, USA.

BNFL. 1999d. *Seismic Analysis and Design Approach*, RPT-W375-RU00005, Revision D, 6 August 1999. BNFL Inc., Richland, Washington, USA.

BNFL. 2000a. *State Environmental Policy Act Environmental Checklist for the River Protection Project-Waste Treatment Plant*, RPT-W375-EN00014, Revision 0, 31 March 2000. BNFL Inc., Richland, Washington, USA.

BNFL. 2000b. *River Protection Project - Waste Treatment Plant Emergency Management Plan*, PL-W375-SA00004, Revision 0. BNFL Inc., Richland, Washington, USA.

CWA. 1977. *Clean Water Act of 1977*, 33 USC, Section 1251. US Congress, Washington D.C., USA.

DOE. 1993. *Natural Phenomena Hazards Performance Categorization Guidelines for Structures, Systems, and Components*, DOE-STD-1021-93. US Department of Energy, Washington, D.C., USA.

DOE. 1995. *Waste Acceptance Product Specifications for Vitrified High-Level Waste Forms*, DOE/EM-0093, Revision 1, May 1995. US Department of Energy, Washington, D.C., USA.

DOE. 1996. *Tank Waste Remediation System, Hanford Site, Richland, Washington, Final Environmental Impact Statement*, DOE/EIS-0189, August 1996. US Department of Energy, Washington D.C., USA.

DOE. 1999. *Final Hanford Comprehensive Land-Use Plan Environmental Impact Statements*, DOE/EIS-0222-F, September 1999. US Department of Energy, Washington D.C., USA.

DOE-RL. 1991. *Double-Shell Tank System Dangerous Waste Permit Application*, DOE/RL-90-39, Revision 0, June 1991. US Department of Energy, Richland Operations Office, Richland, Washington, USA.

DOE-RL. 1993. *Hanford Facility Dangerous Waste Part A Permit Application*, DOE/RL-88-21, April 1993, controlled document. US Department of Energy, Richland Operations Office, Richland, Washington, USA.

DOE-RL. 1995a. *Hanford Site Soil Background: Part 1, Soil Background for Nonradioactive Analytes*, DOE/RL-92-24, Revision 3, October 1995. US Department of Energy, Richland Operations Office, Richland, Washington, USA.

DOE-RL. 1995b. *Hanford Emergency Response Plan*, DOE/RL-94-02, May 1995, controlled document. US Department of Energy, Richland Operations Office, Richland, Washington, USA.

DOE-RL. 1996. *Hanford Facility Contingency Plan*, Sutton LN and Miskho AG, DOE/RL-93-75, Revision 2, July 1996. US Department of Energy, Richland Operations Office, Richland, Washington, USA.

DOE-RL. 1998. *Hanford Facility Dangerous Waste Permit Application, General Information Portion*, DOE/RL-91-28, Revision 4, May 1998, controlled document. US Department of Energy, Richland Operations Office, Richland, Washington, USA.

DOE-RL. 1999a *Annual Hanford Site Environmental Permitting Status Report*, DOE/RL-96-63, Revision 3, October 1999. US Department of Energy, Richland Operations Office, Richland, Washington, USA.

DOE-RL. 1999b. *Hanford Emergency Management Plan*, DOE/RL-94-02, October 1999, controlled document. US Department of Energy, Richland Operations Office, Richland, Washington, USA.

Ecology. 1985. *Hazardous Waste Management Act*. Washington State Department of Ecology, Olympia, Washington, USA.

Ecology. 1994a. *Dangerous Waste Portion of the Resource Conservation and Recovery Act Permit for the Treatment, Storage, and Disposal of Dangerous Waste,* WA7890008967. Washington State Department of Ecology, Olympia, Washington, USA.

Ecology. 1994b. *Satellite Accumulation*, Technical Information Memorandum, Publication 94-20, 1994. Washington State Department of Ecology, Olympia, Washington, USA.

Ecology. 1994c. *Guidance for Clean Closure of Dangerous Waste Facilities*, Publication 94-111, August 1994. Washington State Department of Ecology, Olympia, Washington, USA.

Ecology. 1995a. *Responsiveness Summary Amendment to the Dangerous Waste Regulations Chapter 173-303 WAC*, Publication 95-423, October 1995. Washington State Department of Ecology, Olympia, Washington, USA.

Ecology. 1995b. *Guidance on Sampling and Data Analysis Methods,* Publication 94-49, January 1995. Washington State Department of Ecology, Olympia, Washington, USA.

Ecology. 1996. *Dangerous Waste Permit Application Requirements For Facilities Which Store and/or Treat Dangerous Wastes In Tank Systems and/or Containers*, Publication 95-402, Revised June 1996. Washington State Department of Ecology, Olympia, Washington, USA.

Ecology, EPA, and DOE. 1998. *Hanford Federal Facility Agreement and Consent Order*, 89-10, Revision 5, December 1998. Washington State Department of Ecology, Olympia, Washington, USA, US Environmental Protection Agency, Washington, D.C., USA, and US Department of Energy, Washington, D.C., USA (also known as Tri-Party Agreement).

EPA. 1986. *Test Methods for Evaluating Solid Waste, Physical Chemical Methods,* SW-846, 3rd Edition (as amended by Updates I, II, IIA, IIB, and III). US Environmental Protection Agency, Washington, D.C., USA.

EPA. 1990. *Quality Assurance/Quality Control Guidance for Removal Activities: Sampling and QA/QC Plan and Data Validation Procedures, Interim Final*, EPA 540-G-90-004. US Environmental Protection Agency, Washington, D.C., USA.

EPA. 1994. *Waste Analysis at Facilities that Generate, Treat, Store, and Dispose of Hazardous Wastes: A Guidance Manual*, EPA 530-R-94-024 (OSWER Directive 9938.4-03), April 1994. US Environmental Protection Agency, Washington, D.C., USA.

HNF. 1998. *Hanford Site Solid Waste Acceptance Criteria*, HNF-EP-0063, Revision 5, June 1998. Fluor Daniel Hanford, Inc., Richland, Washington, USA.

Mitchell RM, Edwards DL, Markes BM, Price RK, Reynolds KD, Thackaberry WR, Chou CJ, Johnson VS, Horton DG, Reidel SP, Bergstrom KA, and Mitchell TH. 1998. *TWRS Phase I Privatization*

Site Preconstruction Characterization Report, HNF-2067, Revision 0, March 1998. Fluor Daniel Hanford, Inc., Richland, Washington, USA.

NFPA. 1981. *Flammable and Combustible Liquids,* Code 30. National Fire Protection Association, Quincy, Maryland, USA.

NFPA. 1989. *Standard for the Installation of Sprinkler Systems*, Code 13; *Standard for the Installation of Private Fire System Mains and their Appurtenances*, Code 24; and *Life Safety Code*, Code 101. National Fire Protection Association, Quincy, Maryland, USA.

NWPA. 1982. *Nuclear Waste Policy Act of 1982.*

Numatec/SESC. 1997. *TWRS Operation and Utilization Plan*, Volumes 1 and 2, HNF-SD-WM-SP-012, Revision 0A, September 1997. Numatec and SGN Eurisys Service Corporation, Richland, Washington, USA.

PNL. 1994. *Hanford Site Radiological Control Manual*, HSRCM-1, Revision 2, December 1994, controlled document. Pacific Northwest Laboratory, Richland, Washington, USA.

RCRA. 1976. *Resource Conservation and Recovery Act of 1976*, 42 USC, Section 6901. US Congress, Washington D.C., USA.

UBC. 1997. Uniform Building Code, 1997 Edition. International Conference of Building Officials, Whittier, California, USA.

WAC 173-303. *Dangerous Waste Regulations.* Washington Administrative Code.

WAC 173-340. *Model Toxics Control Act - Cleanup.* Washington Administrative Code.

WAC 173-400. *General Regulations for Air Pollution Sources*. Washington Administrative Code.

WAC 173-460. *Controls for New Sources of Toxic Air Pollutants*. Washington Administrative Code.

WAC 173-480. *Ambient Air Quality Standards and Emission Limits for Radionuclides*. Washington Administrative Code.

WAC 197-11. *State Environmental Policy Act*. Washington Administrative Code, as amended.

WMFS. 1997. *Sampling and Mobile Laboratories Procedures*, SML-EP-001, Revision 0. Waste Management Federal Services Inc., Northwest Operations, Richland, Washington, USA.

WMFS. 1998. *Hanford Site Liquid Waste Acceptance Criteria*, HNF-3172, Revision 0, September 1998. Waste Management Federal Services of Hanford, Inc., Richland, Washington, USA.

WSDOT. 1997. *Standard Specifications for Road, Bridge and Municipal Construction*, M 21-01, October 1997. Washington State Department of Transportation, Olympia, Washington, USA.

WSDOT. 1998. *Design Manual*, M 22-01, April 1998. Washington State Department of Transportation, Olympia, Washington, USA.