1249991

[0064838H]

RPP-RPT-58156, Rev. 0

Basis for Miscellaneous Underground Storage Tanks and Special Surveillance Facilities Waste Volumes Published in HNF-EP-0182 Revision 320 "Waste Tank Summary Report for Month Ending August 31, 2014"

K. G. Duncan
Washington River Protection Solutions LLC

Richland, WA 99352

U.S. Department of Energy Contract DE-AC27-08RV14800

RECEIVED
AUG 22 2018
EDMC

EDT/ECN:	N/A	UC:	N/A
Cost Center:	N/A	Charge Code:	N/A
B&R Code:	N/A	Total Pages:	283 mw 9/29/2014

Key Words: Miscellaneous Underground Storage Tanks, MUST

Abstract: The purpose of this report is to reestablish a traceable waste volume estimate for each of the surveillance facilities and tanks listed in HNF-EP-0182 Tables 5-1 and 5-2.

TRADEMARK DISCLAIMER. Reference herein to any specific commercial product, process, or service by trade name, trademark, manufacturer, or otherwise, does not necessarily constitute or imply its endorsement, recommendation, or favoring by the United States Government or any agency thereof or its contractors or subcontractors.

DATE:
Sep 29, 2014
HANFORD RELEASE

APPROVED
By Janis D. Aardal at 7:28 am, Sep 29, 2014

Release Approval Date Release Stamp

Approved For Public Release

RPP-RPT-58156
Revision 0

Basis for Miscellaneous Underground Storage Tanks and Special Surveillance Facilities Waste Volumes Published in HNF-EP-0182 Revision 320 "Waste Tank Summary Report for Month Ending August 31, 2014"

K. G. Duncan
Washington River Protection Solutions LLC

D. J. Washenfelder
AEM Consulting LLC

Date Published
October 2014

washington river protection solutions

Prepared for the U.S. Department of Energy
Office of River Protection

Contract No. DE-AC27-08RV14800

EXECUTIVE SUMMARY

This report reestablishes a traceable waste volume estimate for each of the surveillance facilities and tanks listed in HNF-EP-0182 Tables 5-1 and 5-2. Waste volume estimates for actively monitored tanks use the last "Good" data available in SACS at time of publication. Monitoring data are held in suspense pending technical review and acceptance as "Good" data. Waste volume estimates for unmonitored tanks and surveillance facilities use the last reported historical measurement data. Tanks without recoverable waste volume data are reported as having "No Data"

TABLE OF CONTENTS

1.0 INTRODUCTION 1-1

2.0 SUMMARY OF WASTE VOLUME ESTIMATE REPORTING PROTOCOL 2-1

3.0 WASTE VOLUME ESTIMATE BASES 200-EAST AREA 3-1

3.1 204-AR / 204-AR-TK-1 3-1

3.2 204-AR / 204-AR SUMP 3-3

3.3 209-E-TK-111 3-3

3.4 241-A-302-A 3-4

3.5 241-A-302-B 3-6

3.6 241-A-350 3-8

3.7 241-A-417 3-10

3.8 241-AX-151 DIVERTER STATION – CATCH TANK 241-AX-151-CT 3-12

3.9 241-AX-151 DIVERTER STATION – TANKS D, E, F AND G 3-19

3.10 241-AX-152 DIVERTER STATION – CATCH TANK 241-AX-152-CT 3-19

3.11 241-AX-152 DIVERTER STATION DIVERTER TANKS – TANKS A AND B 3-21

3.12 241-AZ-151 DIVERTER STATION 3-21

3.13 241-AZ-154 3-23

3.14 241-AZ-301 3-25

3.15 241-B-301 (241-B301-B) 3-25

3.16 241-B-302-B 3-28

3.17 241-BX-302-A 3-33

3.18 241-BX-302-B 3-37

3.19 241-BX-302-C 3-41

3.20 241-BY-ITS2-TK-1 3-45

3.21 241-BY-ITS2-TK-2 3-45

3.22 241-C-301-C 3-46

3.23 241-ER-311 3-50

3.24 241-ER-311A 3-52

3.25 244-A-TK 3-54

3.26 244-A-SUMP 3-57

3.27 244-AR VAULT / TK-244-AR-001 3-57
3.28 244-AR VAULT / SUMP-AR-001 3-58
3.29 244-AR VAULT / TK-244-AR-002 3-58
3.30 244-AR VAULT / SUMP-AR-002 3-58
3.31 244-AR VAULT / TK-244-AR-003 3-59
3.32 244-AR VAULT / SUMP-AR-003 3-59
3.33 244-AR VAULT / TK-244-AR-004 3-59
3.34 244-BX-TK 3-60
3.35 244-BX-SUMP 3-62
3.36 244-BXR VAULT / TK-BXR-001 3-65
3.37 244-BXR VAULT / SUMP-BXR-001 3-68
3.39 244-BXR VAULT / TK-BXR-002 3-70
3.40 244-BXR VAULT / SUMP-BXR-002 3-73
3.41 244-BXR VAULT / TK-BXR-003 3-75
3.42 244-BXR VAULT / SUMP-BXR-003 3-78
3.43 244-BXR VAULT / TK-BXR-011 3-80
3-82
3.44 244-BXR VAULT / SUMP-BXR-011 3-83
3.45 244-CR VAULT / TK-CR-001 3-101
3.46 244-CR VAULT / SUMP-CR-001 3-104
3.47 244-CR VAULT / TK-CR-002 3-106
3.48 244-CR VAULT / SUMP-CR-002 3-109
3.49 244-CR VAULT / TK-CR-003 3-111
3.50 244-CR VAULT / SUMP-CR-003 3-114
3.51 244-CR VAULT / TK-CR-011 3-116
3.52 244-CR VAULT / SUMP-CR-011 3-119
4.0 WASTE VOLUME ESTIMATE BASES 200-WEST AREA 4-1
4.1 213W-TK-1 4-1
4.2 231-W-151 TK-001 AND TK-002 4-3
4.3 240-S-302 4-5
4.4 241-E/W-151 (241-EW-151) 4-7
4.5 241-S-302-A 4-9
4.6 241-S-302-B 4-11

4.7 241-S-304 4-16
4.8 241-SX-302 4-18
4.9 241-T-301 (241-T-301B) 4-24
4.10 241-TX-302-A 4-28
4.11 241-TX-302-B 4-33
4.12 241-TX-302-B(R) 4-38
4.13 241-TX-302-C 4-38
4.14 241-TX-302-X (241-TX-302-XB) 4-40
4.15 241-TY-302-A 4-45
4.16 241-TY-302-B 4-50
4.17 241-U-301 (241-U-301-B) 4-55
4.18 241-UX-302-A 4-57
4.19 241 (216) -Z-8 4-59
4.20 242-S TK-C-100 4-61
4.21 242-T-135 4-64
4.22 242-TA-R1 4-64
4.23 242-TA SUMP 4-65
4.24 243-S-TK-1 4-65
4.25 244-S-TK 4-67
4.26 244-S SUMP 4-69
4.27 244-TX-TK 4-71
4.28 244-TX-SUMP 4-73
4.29 244-TXR VAULT/ TK-TXR-001 4-76
4.30 244-TXR VAULT / SUMP-TXR-001 4-79
4.31 244-TXR VAULT / TK-TXR-002 4-81
4.32 244-TXR VAULT / SUMP-TXR-002 4-84
4.33 244-TXR VAULT / TK-TXR-003 4-86
4.34 244-TXR VAULT / SUMP-TXR-003 4-89
4.35 244-U-TK 4-104
4.36 244-U-SUMP 4-106
4.37 244-UR VAULT/ TK-UR-001 4-109
4.38 244-UR VAULT / SUMP-UR-001 4-112
4.39 244-UR VAULT / TK-UR-002 4-114

4.40 244-UR VAULT / SUMP-UR-002 4-117

4.41 244-UR VAULT / TK-UR-003 4-119

4.42 244-UR VAULT / SUMP-UR-003 4-122

4.43 244-UR VAULT / TK-UR-004 4-124

5.0 REFERENCES 5-1

LIST OF TABLES

Table 2-1. Waste Volumes Contained in 200-East Area Miscellaneous Underground Storage Tanks and Special Surveillance Facilities 2-3

Table 2-2. Waste Volumes Contained in 200-West Area Miscellaneous Underground Storage Tanks and Special Surveillance Facilities 2-5

LIST OF TERMS

Abbreviations and Acronyms

HFFACO	Hanford Federal Facility Agreement and Consent Order Action Plan
HLSW	High-Low Acid Salt Waste
IMUST	Inactive Miscellaneous Undergroung Storage Tank
MUST	Miscellaneous Underground Storage Tank
PCSACS	Personal Computer Surveillance Analysis Computer System
SACS	Surveillance Analysis Computer System

1.0 INTRODUCTION

The Hanford tank farms consist of 28 active double-shell tanks and 149 inactive single-shell tanks, storing about 55.9 million gallons of radioactive waste in September 2014. The single-shell tank system includes five inactive process vault surveillance facilities containing 19 tanks, and 36 additional Inactive Miscellaneous Underground Storage Tanks (IMUSTs) listed in *Single-Shell Tank Dangerous Waste Permit Application Part A Form*, dated May 31, 2011. The double-shell tank system includes one ancillary facility listed in the *Double-Shell Tank System/204-AR Waste Unloading Station Dangerous Waste Permit Application Part A Form*, dated December 14, 2009. In addition, an active Miscellaneous Underground Storage Tank (MUST), tank 241-AZ-301, collects process condensate generated from the four 241-AY/241-AZ double-shell tanks.

Waste volumes reported for actively monitored MUSTs use waste level data recorded in the Surveillance Analysis Computer System (SACS). Waste volumes reported for surveillance facilities and IMUSTs typically rely on historical data from the 1980's and 1990's collected at the time of deactivation. These include stabilization evaluations and liquid assessments. In many cases data traceability for the surveillance facilities and IMUSTs has been lost since the waste volumes were first published in WHC-EP-0182, Rev. 26, *Tank Farm Surveillance and Waste Status Summary Report for May 1990* (later renumbered and retitled, HNF-EP-0182, *Waste Tank Summary Report*).

The purpose of this report is to reestablish a traceable waste volume estimate for each of the surveillance facilities and tanks listed in HNF-EP-0182 Tables 5-1 and 5-2. Waste volume estimates for actively monitored tanks use the last "Good" data available in SACS at time of publication. Monitoring data are held in suspense pending technical review and acceptance as "Good" data. Waste volume estimates for unmonitored tanks and surveillance facilities use the last reported historical measurement data. Tanks without recoverable waste volume data are reported as having "No Data".

2.0 SUMMARY OF WASTE VOLUME ESTIMATE REPORTING PROTOCOL

Surveillance facilities and MUSTs/IMUSTs listed in the report are presented in the order that they appear in HNF-EP-0182 Rev. 320 (to be issued), Tables 5-1 and 5-2. When a surveillance facility or MUST/IMUST is added to the tables, this report will be updated to include the basis for the initial waste volume estimate.

New field measurements may result in revised waste volumes. Waste volume changes that occur after publication of this report for surveillance facilities and MUST/IMUSTs already listed in Tables 5-1 and 5-2 will continue to be published in HNF-EP-0182 Tables 5-1 and 5-2.

Calibration Tables

If a surveillance facility or MUST/IMUST has waste level data, and a calibration table for conversion from waste level to waste volume exists, then the data, table, and waste volume calculation are provided in the report. Calibrations tables are from one of the following published sources:

1. ECN-627576, Rev.0, Incorporation and Revision of Catch Tank Specification Limits/ N1853
2. ECN-630520, Rev. 0, Incorporation of Catch Tank Specification Limits in SD-WM-TI-352, N1743
3. ECN-641242, Rev. 0, Modifications to SD-WM-TI-352
4. RPP-CALC-24219, Rev. 0, 244-CR Vault Tank and Cell Volume Calculations
5. SD-RE-TI-057, Rev. 0, Tank Farms Catch Tanks – Calibration Tables
6. WRPS-0901391, Tank Farm Catch Tank Calibrations
7. If a calibration table was created for use in this report, it is included in the applicable tank section.

If a surveillance facility or MUST/IMUST has waste level data but no calibration table, then an analogous table from an identical tank, sump, or process cell is used if available. For example, the 244-BXR, 244-CR, 244-TXR, and 244-UR process cells and tanks are identical. Process vault calibration tables exist for 244-CR and have been applied to the other process vaults. If analogous calibration tables are used to determine waste volume estimates, then the selection basis and detailed explanation of the methodology are provided.

The location of the monitoring device affects the volume. Unless otherwise specified the monitoring device is assumed to be located directly above the "0-inch" reference elevation used for the calibration table.

Weight Factor Conversion

For tanks with a waste level reported as an uncorrected "weight factor", the waste specific gravity is assumed to equal one when determining the corrected weight factor and the waste volume estimate.

$$Waste\ Specific\ Gravity = Waste\ Density\ /Water\ Density\ at\ Waste\ Temperature$$

$$Corrected\ "Weight\ Factor" = Uncorrected\ "Weight\ Factor"/Waste\ Specific\ Gravity$$

$$Corrected\ \text{Weight Factor} = Waste\ Level\ for\ Determining\ Waste\ Volume\ from\ Calibration\ Table$$

The specific gravity assumption overstates the waste volume estimate whenever the waste density is greater than water at the waste temperature.

Weight Factor Reference Point Correction

Calibration tables used in the report directly convert waste level to waste volume. Waste level data reported as weight factor have been increased by the vertical distance between the weight factor leg termination in the tank and the calibration table 0-inch reference point in order to use the calibration table.

For example, Tank 244-A weight factor terminates 14-inches above the bottom center of the tank. The bottom center is the calibration table's 0-inch reference point. A 244-A weight factor reading of "0-inch" is therefore properly interpreted as a 14-inch waste level when using the calibration table. The correction will result in an overstated waste volume whenever the waste level is lower than the height of the weight factor leg termination in the tank.

HNF-EP-0182, Tables 5-1 and 5-2 Waste Volumes Changes

Waste volumes in HNF-EP-0182 Tables 5-1 and 5-2 are reported in kilogallons according to the following protocol:

- Surveillance facility and MUST/IMUSTs reported as "empty" = "No data"
- Volumes $0 < x < 100$ gallons = < 0.10 kilogallons
- Volumes $100 \leq x < 1{,}000$ gallons = Two decimal place kilogallons
- Volumes $x \geq 1{,}000$ gallons = One decimal place kilogallons

Tables 2-1 and 2-2 summarize the waste volume estimates for the tanks listed in HNF-EP-0182 Tables 5-1 and 5-2. Individual tank waste volume estimate bases and calculations are provided in subsequent sections of the report.

Table 2-1. Waste Volumes Contained in 200-East Area Miscellaneous Underground Storage Tanks and Special Surveillance Facilities

Tank	HNF-EP-0182 Rev. 319 (kgal)	HNF-EP-0182 Rev. 320 (kgal)	Volume Date
204-AR / 204-AR-TK-1	0.29	0.71	03/22/2009
204-AR / 204-AR Sump	Not previously reported	No data	
209-E-TK-111	Unknown	No data	
241-A-302-A	0.66	0.61	04/01/2014
241-A-302-B	6.3	6.1	12/09/2013
241-A-350	0.46	0.11	03/21/2014
241-A-417	1.2	1.1	11/12/2013
241-AX-151 Catch Tank	Unknown	2.8	08/02/2006
241-AX-151 – 4 Diverter Tanks	Not previously reported	No data	
241-AX-152 Catch Tank	< 0.1	< 0.10	11/27/2013
241-AX-152 – 2 Diverter Tanks	Not previously reported	No data	
241-AZ-151	1.4	2.1	10/30/2013
241-AZ-154	< 0.1	< 0.10	07/31/2008
241-AZ-301	Volume changes daily – pumped as needed	Continuous fill and empty cycles	
241-B-301-B	22.2	0.54	04/24/1985
241-B-302-B	4.9	5.0	05/10/1985
241-BX-302-A	0.84	0.83	03/14/1984
241-BX-302-B	1.0	1.0	05/08/1985
241-BX-302-C	0.87	0.84	04/11/1985
241-BY-ITS2-TK 1	Unknown	No data	
241-BY-ITS2-TK 2	Unknown	0.78	08/24/2006
241-C-301-C	10.5	10.5	05/31/1985
241-ER-311	Unknown	< 0.10	03/05/2014
241-ER-311A	Empty	No data	
244-A-TK	4.7	5.2	11/12/2013
244-A-Sump	Not reported previously	< 0.10	09/25/2013
244-AR Vault / TK- 244-AR-001	0.85	0.19	06/12/2003
244-AR Vault / Sump-AR-001	< 0.1	< 0.10	07/06/2003
244-AR Vault / TK-244-AR-002	2.3	0.19	04/30/2003
244-AR Vault / Sump-AR-002	< 0.1	< 0.10	07/06/2003

Table 2-1. Waste Volumes Contained in 200-East Area Miscellaneous Underground Storage Tanks and Special Surveillance Facilities

Tank	HNF-EP-0182 Rev. 319 (kgal)	HNF-EP-0182 Rev. 320 (kgal)	Volume Date
244-AR Vault / TK-244-AR-003	0.23	< 0.10	04/30/2003
244-AR Vault / Sump-AR-003	< 0.1	< 0.10	08/12/2003
244-AR Vault / TK-244-AR-004	< 0.1	< 0.10	04/30/2013
244-BX-TK	11.0	10.9	02/18/2014
244-BX-Sump	Not previously reported	< 0.10	02/18/2014
244-BXR Vault / TK-BXR-001	7.2	4.1	11/1984
244-BXR Vault / Sump-BXR-001	< 0.1	< 0.10	04/1984
244-BXR Vault / TK-BXR-002	2.2	1.1	02/20/1985
244-BXR Vault / Sump-BXR-002	2.2	< 0.10	02/1985
244-BXR Vault / TK-BXR-003	1.8	0.79	02/18/1985
244-BXR Vault / Sump-BXR-003	8.3	7.2	02/18/1985
244-BXR Vault / TK-BXR-011	7.1	4.0	04/1984
244-BXR Vault / Sump-BXR-011	11.6	7.6	01/24/1985
244-CR Vault / TK-CR-001	3.4	3.6	02/25/2014
244-CR Vault / Sump-CR-001	< 0.1	< 0.10	03/03/2010
244-CR Vault / TK-CR-002	0.77	0.75	11/29/2004
244-CR Vault / Sump-CR-002	< 0.1	<0.10	03/09/2010
244-CR Vault / TK-CR-003	2.1	2.3	02/25/2014
244-CR Vault / Sump-CR-003	< 0.1	< 0.10	03/10/2010
244-CR Vault / TK-CR-011	4.0	4.0	11/30/2004
244-CR Vault Sump-CR-011	< 0.1	< 0.10	02/25/2010

Table 2-2. Waste Volumes Contained in 200-West Area Miscellaneous Underground Storage Tanks and Special Surveillance Facilities

Tank	HNF-EP-0182 Rev. 319 (kgal)	HNF-EP-0182 Rev. 320 (kgal)	Volume Date
213W-TK-1	Unknown	1.6	03/19/1999
231-W-151 / TK-001	Unknown	1.4	08/15/1974
231-W-151 / TK-002	Unknown	0.96	08/15/1974
240-S-302	1.7	1.7	04/15/2014
241-E/W-151 Vent Station Catch Tank	0.5	0.54	12/05/2013
241-S-302A	Empty	0.30	03/19/2001
241-S-302B	Empty	< 0.10	04/1984
241-S-304	< 0.1	< 0.10	06/26/2013
241-SX-302	Unknown	1.4	11/1984
241-T-301	Unknown	22.0	07/03/1985
241-TX-302A	Unknown	2.5	08/1984
241-TX-302B	3.3	1.7	05/20/2014
241-TX-302-B(R)	Unknown	No data	
241-TX-302C	0.2	0.20	12/10/2013
241-TX-302-X-B	Unknown	0.34	08/1984
241-TY-302A	Unknown	0.46	06/25/1985
241-TY-302B	Empty	< 0.10	08/1984
241-U-301B	1.4	1.4	10/18/2013
241-UX-302A	0.1	0.44	12/05/2013
241-Z-8 (216-Z-8)	Unknown	0.50	10/19/1974
242-S TK C-100	Unknown	8.0	
242-T-135	Unknown	No data	
242-TA-R1	Unknown	No data	
242-TA-Sump	Not previously reported	< 0.10	09/24/2010
243-S-TK-1	Empty	No data	
244-S-TK	4.0	3.6	04/07/2014
244-S-Sump	Not previously reported	< 0.10	06/24/2014
244-TX-TK	7.0	6.7	05/07/2014
244-TX-Sump	Not previously reported	< 0.10	02/18/2014
244-TXR Vault / TK-TXR-001	4.7	0.47	10/1984
244-TXR Vault / Sump-TXR-001	< 0.1	<0.10	10/1984
244-TXR Vault / TK-TXR-002	2.9	1.9	10/1984
244-TXR Vault / Sump-TXR-002	< 0.1	0.10	10/1984

Table 2-2. Waste Volumes Contained in 200-West Area Miscellaneous Underground Storage Tanks and Special Surveillance Facilities

Tank	HNF-EP-0182 Rev. 319 (kgal)	HNF-EP-0182 Rev. 320 (kgal)	Volume Date
244-TXR Vault / TK-TXR-003	6.5	5.3	10/1984
244-TXR Vault / Sump-TXR-003	< 0.1	< 0.10	10/1984
244-U-TK	Unknown	1.9	11/03/2010
244-U-Sump	Not previously reported	No data	
244-UR Vault / TK-UR-001	2.2	0.42	07/1984
244-UR Vault / Sump-UR-001	2.1	1.2	06/26/1984
244-UR Vault / TK-UR-002	2.9	1.5	07/11/1984
244-UR Vault / Sump-UR-002	< 0.1	< 0.10	07/08/1984
244-UR Vault / TK-UR-003	1.6	0.60	07/1984
244-UR Vault / Sump-UR-003	2.0	3.4	06/21/1984
244-UR Vault / TK-UR-004	Empty	No data. Tank used for nitric acid storage	

3.0 WASTE VOLUME ESTIMATE BASES 200-EAST AREA

3.1 204-AR / 204-AR-TK-1

PCSACS Level Reading = 710 gallons (PCSACS reports waste volume directly in gallons)
PCSACS Level Reading Date = 2009-03-22

Calibration Table: WRPS-0901391, *Tank Farm Catch Tank Calibrations, page 3*

$$Waste\ Volume = 710\ gallons/(1000\ gallons/kilogallon)$$
$$Waste\ Volume = 0.71\ kilogallons$$

204-AR / 204-AR-TK-1 Calibration Table

D.J. Washenfelder
Page 3
August 14, 2009

WRPS-0901391

Tank: 204-AR-Tk-1

Date of Calibration: Calculated

NOMINAL TANK CAPACITY: 1478 Gal.

DIMENSIONS: 5'6" O.D. 8'6" Tall

50%: 734 Gal. 80%: 1186 Gal.

REF. DWG #: H-2-70707

in.	gal	in.	gal	in.	gal	in.	gal	in.	gal
1	19	25	369	49	720	73	1070	97	1420
2	34	26	384	50	734	74	1084	98	1434
3	49	27	399	51	749	75	1099	99	1449
4	63	28	413	52	763	76	1113	100	1463
5	78	29	428	53	778	77	1128	101	1478
6	92	30	442	54	792	78	1143		
7	107	31	457	55	807	79	1157		
8	121	32	472	56	822	80	1172		
9	136	33	486	57	836	81	1186		
10	151	34	501	58	851	82	1201		
11	165	35	515	59	865	83	1215		
12	180	36	530	60	880	84	1230		
13	194	37	544	61	895	85	1245		
14	209	38	559	62	909	86	1259		
15	224	39	574	63	924	87	1274		
16	238	40	588	64	938	88	1288		
17	253	41	603	65	953	89	1303		
18	267	42	617	66	968	90	1318		
19	282	43	632	67	982	91	1332		
20	297	44	647	68	997	92	1347		
21	311	45	661	69	1011	93	1361		
22	326	46	676	70	1026	94	1376		
23	340	47	690	71	1040	95	1391		
24	355	48	705	72	1055	96	1405		

3.2 204-AR / 204-AR SUMP

The sump is equipped with a leak detector and leak detection alarm (Drawing H-2-70703 Sheet 2). There is no level measurement instrumentation and no recorded zip cord information, so there are no data.

There is no calibration table for this sump. The sump is 12-in by 12-in by 8-in deep (Drawing H-2-70691 Detail 21). Each 1-in increase in waste level elevation between 0-in and 8-in corresponds to a 0.62 gallon increase.

$$Waste\ Volume/Vertical\ inch = (12 - in\ x\ 12 - in\ x\ 1 - in\ Deep)/(12\ inches/ft)^3\ x\ 7.48\ gallons/ft^3$$

$$Waste\ Volume/Vertical\ inch = 0.62\ gallons$$

3.3 209-E-TK-111

$$Waste\ Volume - No\ data$$

Tank 209-E-TK-111 Isolation

Webb, Christine R

From: Turlington, Daniel R
Sent: Monday, October 24, 2011 11:55 AM
To: Webb, Christine R
Subject: RE: 209-E-WS-3

On 10/10/2011 the work of disconnecting, cutting and plugging five lines in the 209E Valve Pit (209-E-WS-3) that isolated Tank-111 was completed.

The Valve Pit will have the metal lid placed back over it, and not back-filled with gravel, as there are other lines still in the valve pit associated with the tank farms and not part of this work scope.

Thank you

Daniel Turlington

Field Services & Near Field Monitoring/D4

CHPRC Environmental Protection ECO
Daniel_R_Turlington@rl.gov
509-373-0176
225-223-4606

"Teams do not seek consensus; they seek the best answer."

CH2MHILL
Plateau Remediation Company

Please consider the environment before printing this e-mail

3.4 241-A-302-A

PCSACS Level Reading = 13.39-in
PCSACS Level Reading Date = 2014-04-01

Calibration Table: ECN-630520, Rev. 0, *Incorporation of Catch Tank Specification Limits in SD-WM-TI-352, N1743,* page 6

13-in = 580 gallons
14-in = 646 gallons

$$PCSACS\ Level\ Reading = 13.39 - in = 580\ gallons + 0.39\ x\ (646 - 580\ gallons)$$
$$Waste\ Volume = 606\ gallons$$
$$Waste\ Volume = 606\ gallons/(1000\ gallons/kilogallon)$$
$$Waste\ Volume = 0.61\ kilogallons$$

241-A-302-A Calibration Table

ECN 630520, pg # 6

~~39~~ 40

TANK(S) A-302-A
Date of Calibration: Calculated

NOMINAL TANK CAPACITY: 8,486 Gal. DIMENSIONS: 9' O.D.
50%: 4,243 Gal. 80%: 6,789 Gal. 16'6" BTWN. ENDS
REF. DWG. #: H-2-53096 SHAPE/POSITION: HORIZ/RND ENDS

LEVEL MEASUREMENT: ☐ Manual Tape ☐ FIC Transmitter Range:

in.	gal	in.	gal	in.	gal	in.	gal	in.	gal
1"	13	23"	1322	45"	3348	67"	5530	89"	7481
2"	36	24"	1405	46"	3446	68"	5627	90"	7556
3"	66	25"	1488	47"	3545	69"	5723	91"	7630
4"	102	26"	1573	48"	3645	70"	5819	92"	7702
5"	142	27"	1659	49"	3744	71"	5915	93"	7772
6"	186	28"	1747	50"	3844	72"	6009	94"	7840
7"	233	29"	1835	51"	3944	73"	6103	95"	7906
8"	284	30"	1924	52"	4044	74"	6197	96"	7970
9"	338	31"	2014	53"	4144	75"	6289	97"	8032
10"	395	32"	2105	54"	4244	76"	6381	98"	8091
11"	454	33"	2197	55"	4343	77"	6472	99"	8148
12"	516	34"	2289	56"	4442	78"	6562	100"	8202
13"	580	35"	2383	57"	4542	79"	6651	101"	8253
14"	646	36"	2477	58"	4642	80"	6739	102"	8300
15"	714	37"	2571	59"	4742	81"	6827	103"	8344
16"	784	38"	2667	60"	4841	82"	6912	104"	8384
17"	856	39"	2763	61"	4941	83"	6998	105"	8420
18"	930	40"	2859	62"	5040	84"	7081	106"	8450
19"	1005	41"	2956	63"	5138	85"	7164	107"	8473
20"	1082	42"	3053	64"	5236	86"	7245	108"	8486
21"	1161	43"	3151	65"	5335	87"	7325		
22"	1241	44"	3249	66"	5433	88"	7404		

3.5 241-A-302-B

PCSACS Level Reading = 49.25-in
PCSACS Level Reading Date = 2013-12-09

Calibration Table: ECN-627576, Rev.0, *Incorporation and Revision of Catch Tank Specification Limits / N1853*, page 4

49-in = 6032 gallons
50-in = 6187 gallons

$$PCSACS\ Level\ Reading = 49.25 - in = 6032\ gallons + 0.25\ x\ (6187 - 6032\ gallons)$$
$$Waste\ Volume = 6071\ gallons$$
$$Waste\ Volume = 6071\ gallons/(1000\ gallons/kilogallon)$$
$$Waste\ Volume = 6.1\ killogallons$$

241-A-302-B Calibration Table

ECN 627576
Page 4 of 8

TANK(S) 241-A-302-B
Date of Calibration: Calculated

NOMINAL TANK CAPACITY: 11,752 Gal. DIMENSIONS: 8' O.D.
50%: 5,876 Gal. 80%: 9,402 Gal. 30' Btwn Ends
REF. DWG. #: H-2-57452 & D-61696 SHAPE/POSITION: Horiz/Rnd Ends

LEVEL MEASUREMENT: ☐ Manual Tape ☐ FIC Transmitter Range:

in.	gal	in.	gal	in.	gal	in.	gal	in.	gal
1"	21	21"	1901	41"	4789	61"	7877	81"	10579
2"	60	22"	2031	42"	4943	62"	8027	82"	10691
3"	109	23"	2163	43"	5098	63"	8175	83"	10799
4"	168	24"	2297	44"	5253	64"	8323	84"	10904
5"	233	25"	2433	45"	5409	65"	8469	85"	11005
6"	306	26"	2571	46"	5564	66"	8614	86"	11102
7"	384	27"	2710	47"	5720	67"	8758	87"	11195
8"	468	28"	2851	48"	5876	68"	8900	88"	11284
9"	556	29"	2994	49"	6032	69"	9041	89"	11368
10"	649	30"	3138	50"	6187	70"	9181	90"	11446
11"	747	31"	3283	51"	6343	71"	9318	91"	11518
12"	848	32"	3429	52"	6499	72"	9454	92"	11584
13"	953	33"	3577	53"	6654	73"	9588	93"	11643
14"	1061	34"	3725	54"	6809	74"	9720	94"	11692
15"	1173	35"	3875	55"	6963	75"	9850	95"	11731
16"	1287	36"	4025	56"	7117	76"	9978	96"	11752
17"	1405	37"	4177	57"	7270	77"	10103		
18"	1525	38"	4329	58"	7423	78"	10226		
19"	1648	39"	4481	59"	7575	79"	10347		
20"	1774	40"	4635	60"	7727	80"	10464		

INCK.TBL 3/93

51

3.6 241-A-350

PCSACS Level Reading = 4.11-in
PCSACS Level Reading Date = 2014-03-21

Calibration Table: ECN-641242, Rev. 0, *Modifications to SD-WM-TI-352*, page 3

4-in = 112 gallons
5-in = 122 gallons

PCSACS Level Reading $= 4.11 - in = 112\ gallons + 0.11\ x\ (122 - 112\ gallons)$
$Waste\ Volume = 4.11 - in = 113\ gallons$
$Waste\ Volume = 113\ gallons/(1000\ gallons/kilogallon)$
$Waste\ Volume = 0.11\ kilogallons$

241-A-350 Calibration Table

ENGINEERING CHANGE NOTICE CONTINUATION SHEET Page 3 of 3

ECN 641242
Date 09/07/00

241-A-350 Catch Tank
Date of Calibration: Calculated by DWR 3/15/99

NOMINAL TANK CAPACITY: 768 gal.
50% 384 gal. 80% 615 gal.

DIMENSIONS: 4'6" O. D.
6'10" High
Vert. Cylinder

REF. DWG. #: H-2-43146, H-2-70532, H-2-70538, D-62002

LEVEL MEASUREMENT:
- [ ] Manual Tape
- [ ] ENRAF
- [ ] FIC
- [x] WF Transmitter Range 0-100"

in.	gal.	in.	gal.	in.	gal.	in.	gal.	in.	gal.
0"	73	17"	237	34"	401	51"	565	68"	729
1"	83	18"	247	35"	411	52"	575	69"	738
2"	93	19"	256	36"	420	53"	584	70"	748
3"	102	20"	266	37"	430	54"	594	71"	758
4"	112	21"	276	38"	440	55"	603	72"	767
5"	122	22"	285	39"	449	[redacted]	[redacted]	[redacted]	[redacted]
6"	131	23"	295	40"	459	57"	623	[redacted]	
7"	141	24"	305	41"	469	58"	632		
8"	150	25"	314	42"	478	59"	642		
9"	160	26"	324	43"	488	60"	652		
10"	170	27"	334	44"	497	61"	661		
11"	179	28"	343	45"	507	62"	671		
12"	189	29"	353	46"	517	63"	681		
13"	199	30"	362	47"	526	64"	690		
14"	208	31"	372	48"	536	65"	700		
15"	218	[redacted]	[redacted]	49"	546	66"	710		
16"	228	33"	391	50"	555	67"	719		

Notes:

1 The A-350 caisson sump is 12" 10 X 3" deep, and holds 4 gal. The caisson itself is 8' I. D. and should it fill up around the catch tank, it would hold approx. 5000 gal.

2 The high pressure WF dip tube is elevated to 7.6" from the bottom center of the tank floor.

IIA

A-7900-013-4 (04/94) GEF094

3.7 241-A-417

PCSACS Level Reading = 3.85-in
PCSACS Level Reading Date = 2013-11-12

Calibration Table: ECN-630520, Rev. 0, *Incorporation of Catch Tank Specification Limits in SD-WM-TI-352, N1743*, page 14

3-in = 882 gallons
4-in = 1176 gallons

$$PCSACS\ Level\ Reading = 3.85 - in = 882\ gallons + 0.85\ x\ (1176 - 882\ gallons)$$
$$Waste\ Volume = 1132\ gallons$$
$$Waste\ Volume = 1132\ gallons/(1000\ gallons/kilogallon)$$
$$Waste\ Volume = 1.1\ kilogallons$$

241-A-417 Calibration Table

ECN 630520, Pg # 14

(48)

TANK(S) 417-A Catch Tank
Date of Calibration: Calculated

NOMINAL TANK CAPACITY: 44,087* Gal. DIMENSIONS: 24'6" I.D.
50%: 22,044 Gal. 80%: 35,270 Gal. 150" Overflow*
REF. DWG. #: H-2-56800, H-2-57302 SHAPE/POSITION: Vert/Flat Btm.

LEVEL MEASUREMENT: ☐ Manual Tape ☐ FIC Transmitter Range:

in.	gal	in.	gal	in.	gal	in.	gal	in.	gal
1"	294	25"	7348	49"	14402	73"	21456	97"	28510
2"	588	26"	7642	50"	14696	74"	21750	98"	28804
3"	882	27"	7936	51"	14990	75"	22044	99"	29098
4"	1176	28"	8230	52"	15284	76"	22338	100"	29392
5"	1470	29"	8524	53"	15578	77"	22632	101"	29685
6"	1763	30"	8817	54"	15871	78"	22925	102"	29979
7"	2057	31"	9111	55"	16165	79"	23219	103"	30273
8"	2351	32"	9405	56"	16459	80"	23513	104"	30567
9"	2645	33"	9699	57"	16753	81"	23807	105"	30861
10"	2939	34"	9993	58"	17047	82"	24101	106"	31155
11"	3233	35"	10287	59"	17341	83"	24395	107"	31449
12"	3527	36"	10581	60"	17635	84"	24689	108"	31743
13"	3821	37"	10875	61"	17929	85"	24983	109"	32037
14"	4115	38"	11169	62"	18223	86"	25277	110"	32331
15"	4409	39"	11463	63"	18517	87"	25571	111"	32625
16"	4703	40"	11757	64"	18811	88"	25865	112"	32919
17"	4997	41"	12051	65"	19105	89"	26158	113"	33212
18"	5290	42"	12344	66"	19398	90"	26452	114"	33506
19"	5584	43"	12638	67"	19692	91"	26746	115"	33800
20"	5878	44"	12932	68"	19986	92"	27040	116"	34094
21"	6172	45"	13226	69"	20280	93"	27334	117"	34388
22"	6466	46"	13520	70"	20574	94"	27628	118"	34682
23"	6760	47"	13814	71"	20868	95"	27922	119"	34976
24"	7054	48"	14108	72"	21162	96"	28216	120+	+294/in

Tank sides are straight at ≈294 gal/inch.

* Check with Operations. There is a question as to the actual overflow height/volume.

3.8 241-AX-151 DIVERTER STATION – CATCH TANK 241-AX-151-CT

Catch Tank volume is reported in RPP-RPT-31102 Rev. 0, *Catch Tank 241-AX-151 Liquid Level Assessment Report*, as 2,838 gallons based on a zip cord measurement taken August 2, 2006.

$$Waste\ Volume = 2838\ gallons$$
$$Waste\ Volume = 2838\ gallons/(1000\ gallons/kilogallon)$$
$$Waste\ Volume = 2.8\ kilogallons$$

241-AX-151-CT Catch Tank Liquid Volume Calculation

RPP-RPT-31102
Revision 0

Title: Catch Tank 241-AX-151-CT Liquid Volume Calculation

Originator: S. M. O'Toole **Date:** 9/13/06

Checker: K. J. Hull **Date:** 9/13/06

Organizational Manager: M. J. Sutey **Date:** 9/14/06

Calculation Review Checklist.

1.0 OBJECTIVE/PURPOSE

The objective of this calculation is to estimate the remaining liquid volume in 241-AX-151-CT in accordance with M-23-26.

2.0 RESULT

The liquid volume in 241-AX-151-CT is estimated to be approximately 2838 gallons (gal) based on a zip cord reading made 8/2/06.

3.0 BACKGROUND

The Hanford Federal Facility Agreement and Consent Order Milestone M-23-26 states:

"Submit to Ecology as a primary document a schedule for performing liquid level assessments for 241-AX-151-CT, 241-BY-ITS2 Tank 2, 241-AX-IX, 241-BY-ITS1. Assessments will include liquid level measurements using a manual tape or more accurate method, volume estimates, and a video inspection of the tanks and surrounding vaults sufficient to determine the waste is being stored in a manner protective of human health and the environment.

The schedule shall establish dates for all assessments of no later than December 31, 2006."

4.0 INPUT DATA

Height of temporary top hat is 39 ½ inches (in).
Measured distance from top of top hat to liquid surface 24 feet (ft) 7 in.
Elevation of top of liquid level access riser is 702.081 ft per H-2-44791.
Bottom elevation of vertical catch tank wall (above sloped floor) is 679.50 ft per H-2-44759.
Top elevation of the rectangular sump is beneath the 1/8 in steel liner is 679.25 ft per H-2-44759.
The catch tank dimensions are length 38 ft 4 in and width of the catch tank is 7 ft outside of the 1/8 in steel liner per H-2-44753.
The sump dimensions are length 3 ft, width 2 ft 6 in, depth10 in outside of 1/8 steel liner per H-2-44753.

24 7 9/15/06

15

RPP-RPT-31102
Revision 0

Title: Catch Tank 241-AX-151-CT Liquid Volume Calculation

Originator: S. M. O'Toole **Date:** 9/13/06

Checker: K. J. Hull **Date:** 9/13/06

Organizational Manager: M. J. Sutey **Date:** 9/14/06

The volume of a pyramid = 1/3 × (Area of the Base) × (Altitude) per *CRC Standard Mathematical Tables 21st Edition* (Selby 1973).
The volume of a rectangular box = Length × Width × Height.
The volume of a wedge is = ½ × Length × Width × Height.
The volume of a wedge minus a pyramid section = (½ × Length × Width × Height.) – (1/3 × Length × Width × Height.)
= (1/6 × Length × Width × Height.)

5.0 ASSUMPTIONS

The volume displaced by the drain line, transfer pump, and the jet pump is negligible and are not included in this calculation. The calculation is conservative by excluding the displaced volume.

The rounded tank corners (1 in. radius) are negligible and are excluded from this calculation.

Liquid volumes are rounded to the nearest gal.

6.0 METHOD OF ANALYSIS

This is a hand calculation.

7.0 RESULTS

Figure A-1 is a sketch of the wetted area of the tank. The liquid volume calculation is separated into geometric sections in the following subsections.

3 of 7 9/13/06

RPP-RPT-31102
Revision 0

Title: Catch Tank 241-AX-151-CT Liquid Volume Calculation

Originator: S. M. O'Toole **Date:** 9/13/06

Checker: K. J. Hull **Date:** 9/13/06

Organizational Manager: M. J. Sutey **Date:** 9/14/06

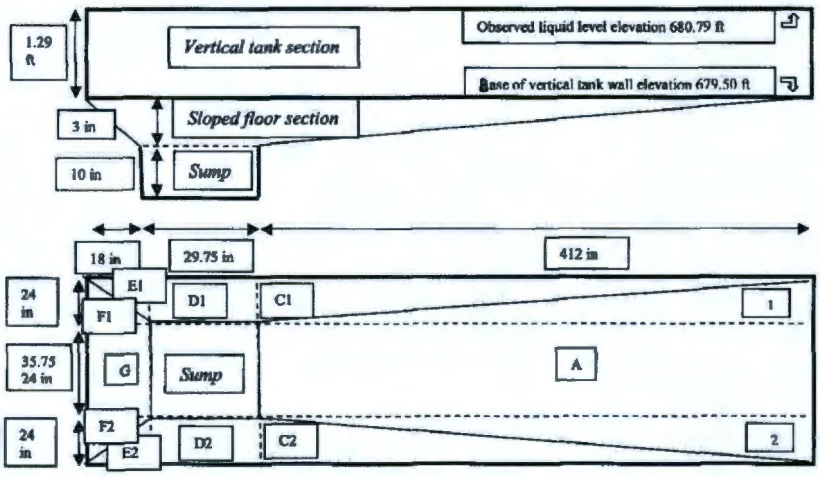

Figure A-1 Cross Section View of 241-AX-151-CT

7.1 Elevation of liquid surface:

Elevation = elevation of riser + height of top hat – length of zip cord
= 702.081 ft + 39 ½ in - 24 ft 7 in
= 8424.97 in + 39.5 in – 295 in *convert to common unit of inches (12 in /ft)**
= 8169.47 in
= 8169.47 in ÷ 12 in/ft *convert to ft*
= 680.79 ft

1/4 7 9/15/06

17

RPP-RPT-31102
Revision 0

Title: Catch Tank 241-AX-151-CT Liquid Volume Calculation

Originator: S. M. O'Toole **Date:** 9/13/06

Checker: K. J. Hull **Date:** 9/13/06

Organizational Manager: M. J. Sutey **Date:** 9/14/06

7.2 Volume of liquid in vertical wall section of catch tank (above plane at the top of the sloped floor):

Volume (vertical tank) = Length of tank x Width of tank x Height of liquid
= (38 ft 4 in- (2 × 1/8 in)) × (7 ft – (2 × 1/8 in)) × (680.79 ft - 679.5 ft)
= (38 ft 4 in – ¼ in) × (7 ft – ¼ in) × (1.29 ft)
= (456 in + 3.75 in) × (84 in – .25 in) × (15.48 in) *convert to in*
= (459.75 in) × (83.75 in) × (15.48 in)
= 596042.87 cu in
= 596042.87 cu in ÷ 1728 cu in/cu ft *convert to cu ft*
= 344.93 cu ft × 7.48 gal/cu ft *convert to gal*
= 2580 gal

7.3 Volume of liquid in sump:

Volume (sump) = Length × Width × Height
= (3 ft – (2 × 1/8 in)) × (2 ft 6 in –(2 × 1/8 in)) × 10 in
= (36 in - .25 in) × (30 in - .25 in) × 10 in *convert to inches*
= (35.75 in) × (29.75 in) × (10 in)
= 10635 cu in ÷ 1728 cu in/cu ft *convert to cu ft*
= 6.15 cu ft × 7.48 gal/cu ft *convert to gal*
= 46 gal

7.4 Volume of liquid in sloped floor section:

Model the sloping floor as wedges and pyramids.

Ratio proportion left side of tank triangle

Volume A= ½ × (3 in) × (35.75 in) × (412 in) = 22094 cu in

Volume of B1 + B2 = 2 × (1/6 × (3 in) × (24 in) × (412 in)) = 9888 cu in

Volume of C1 + C2 = 2 × (1/6 × (3 in) × (24 in) × (412 in)) = 9888 cu in

Volume of D1 + D2 = 2 × (1/2 × (3 in) × (29.75 in) × (24 in)) = 2142 cu in

5 of 7 9/13/06

Title: Catch Tank 241-AX-151-CT Liquid Volume Calculation

Originator: S. M. O'Toole **Date:** 9/13/06

Checker: K. J. Hull **Date:** 9/13/06

Organizational Manager: M. J. Sutey **Date:** 9/14/06

Volume of E1 + E2 = 2 × (1/6 × (3 in) × (18 in) × (24 in)) = 432 cu in

Volume of F1 + F2 = 2 × (1/6 × (3 in) × (24 in) × (18 in)) = 432 cu in

Volume G = ½ × (3 in) × (35.75 in) × (18 in) = 965 cu in

Volume above sump = (3 in) × (35.75 in) × (29.75 in) = 3191 cu in

Volume (sloped floor) = Volume A + (Volume of B1 + B2) + (Volume of C1 + C2) + (Volume of D1 + D2) + (Volume of E1 + E2) + (Volume of F1 + F2) + Volume G + Volume above sump
= (22094 + 9888 + 9888 + 2142 + 432 + 432 + 965 + 3191) cu in
= 49032 cu in ÷ 1728 cu in/cu ft *convert to cu ft*
= 28.375 cu ft × 7.48 gal/cu ft *convert to gal*
= 212 gal

7.4 Total Liquid Volume:

Liquid Volume = Volume (sump) + Volume (sloped floor) + Volume (vertical tank)
= 46 gal + 212 gal + 2580 gal
= 2838 gal

6 of 7 9/15/06

RPP-RPT-31102
Revision 0

Title: Catch Tank 241-AX-151-CT Liquid Volume Calculation

Originator: S. M. O'Toole **Date:** 9/13/06

Checker: K. J. Hull **Date:** 9/13/06

Organizational Manager: M. J. Sutey **Date:** 9/14/06

8.0 CONCLUSION

The liquid volume in 241-AX-151-CT is estimated to be approximately 2838 gals based on a zip cord reading made 8/2/06.

9.0 REFERENCES

Selby, Samuel M, Ph.D. Sc.D, 1973, CRC Standard Mathematical Tables 21st Edition, The Chemical Rubber Co, Cleveland, Ohio.

H-2-44753, 1963, *Structural 241-AX-151 Diverter Sta. Sections & Details*, U.S. Atomic Energy Commission, Hanford Atomic Products Operation, Richland, Washington.

H-2-44759, 1963, *Structural 241-AX-151 Diverter Station Liner*, U.S. Atomic Energy Commission, Hanford Atomic Products Operation, Richland, Washington.

H-2-44791, 1963, *241-AX-151 Diverter Sta. Piping & Equipment Arrangement-Sections*, U.S. Atomic Energy Commission, Hanford Atomic Products Operation, Richland, Washington.

7 of 7 9/15/06

3.9 241-AX-151 DIVERTER STATION – TANKS D, E, F AND G

The four diverter station tanks were equipped with weight factor instrumentation when they were in service. There are no weight factor measurement data nor zip cord readings available, so an accurate waste volume estimate is not possible.

While in service the tank design maintained a continuous waste heel volume determined by the height of the sidewall overflow above the tank bottom. The waste heel volume is calculated from the following information: tanks are 30-in o.d. by 3/8-in thick wall pipe (Drawing H-2-44799) with a bottom elevation of 687.083-ft (Drawing H-2-44791) and overflow invert elevation of 688.88-ft (Drawing H-2-44796). If the tanks are assumed to be filled to the overflow invert elevation (Drawing H-2-44798) and evaporation neglected, then the remaining waste heel volume in each tank would be 65.98 gallons. For this estimate tank internals, tank wall and the 4-in overflow piping are assumed to occupy negligible volume compared to tank heel volume.

$$Waste\ Heel\ Volume = (\pi\ x\ (\ (30\ in/2)^2)/144\ in^2/ft^2\ )\ x\ (688.88\ ft - 687.083\ ft)\ x\ 7.48\ \ gallons/ft^3$$

$$Waste\ Heel\ Volume = 65.98\ gallons$$

$$Waste\ Heel\ Volume\ for\ four\ identical\ diverter\ tanks = 65.98\ gallons\ x\ 4$$
$$Waste\ Heel\ Volume\ for\ four\ identical\ diverter\ tanks = 264\ gallons$$
$$Waste\ Heel\ Volume\ for\ four\ identical\ diverter\ tanks = 264\ gallons/(1000\ gallons/kilogallon)$$
$$Waste\ Heel\ Volume\ for\ four\ identical\ diverter\ tanks = \ 0.26\ kilogallons$$

3.10 241-AX-152 DIVERTER STATION – CATCH TANK 241-AX-152-CT

PCSACS Level Reading = 0-in
PCSACS Level Reading Date = 2013-11-27

Calibration Table: ECN-627576, Rev.0, *Incorporation and Revision of Catch Tank Specification Limits / N1853*, page 7

$$PCSACS\ Level\ Reading = 0 - in = 26\ gallons$$
$$Waste\ Volume = 26\ gallons/(1000\ gallons/kilogallon)$$
$$Waste\ Volume = < 0.1\ kilogallons$$

241-AX-152-CT Calibration Table

ECN 627576
Page 7 of 8

TANK 152-AX Catch Tank
Date of Calibration : Calculated
NOMINAL TANK CAPACITY: 11,000 Gal. DRAWING: H-2-44683
50% 5,500 Gal. 80% 8,800 Gal. (108")

MAN. TAPE	GALLONS	MAN. TAPE	GALLONS	MAN. TAPE	GALLONS
0	26	45	3568	90	7272
1	37	46	3650	91	7355
2	62	47	3732	92	7437
3	110	48	3815	93	7519
4	192	49	3897	94	7602
5	274	50	3979	95	7684
6	357	51	4062	96	7766
7	439	52	4144	97	7849
8	521	53	4226	98	7931
9	604	54	4309	99	8013
10	686	55	4391	100	8096
11	768	56	4473	101	8178
12	851	57	4555	102	8260
13	933	58	4638	103	8343
14	1015	59	4720	104	8425
15	1098	60	4802	105	8507
16	1180	61	4885	106	8590
17	1262	62	4967	107	8672
18	1344	63	5049	108	8754
19	1427	64	5132	109	8837
20	1509	65	5214	110	8919
21	1592	66	5296	111	9001
22	1674	67	5379	112	9084
23	1756	68	5461	113	9166
24	1839	69	5543	114	9248
25	1921	70	5626	115	9331
26	2003	71	5708	116	9413
27	2086	72	5790	117	9495
28	2168	73	5873	118	9578
29	2250	74	5955	119	9660
30	2333	75	6037	120	9742
31	2415	76	6120	121	9825
32	2497	77	6202	122	9907
33	2580	78	6284	123	9989
34	2662	79	6367	124	10072
35	2744	80	6449	125	10154
36	2827	81	6531	126	10236
37	2909	82	6614	127	10319
38	2991	83	6696	128	10401
39	3074	84	6778	129	10483
40	3156	85	6861	130	10566
41	3238	86	6943	131	10648
42	3321	87	7025	132	10730
43	3403	88	7108	133	10813
44	3485	89	7190	134	10895

3.11 241-AX-152 DIVERTER STATION DIVERTER TANKS – TANKS A AND B

The two diverter station tanks were equipped with weight factor instrumentation when they were in service. There are no weight factor measurement data nor zip cord readings available, so an accurate waste volume estimate is not possible.

While in service the tank design maintained a continuous waste heel volume determined by the height of the sidewall overflow above the tank bottom. The waste heel volume is calculated from following information: tanks are 30-in o.d. by 3/8-in thick wall pipe with bottom elevation at 667.42-ft and overflow invert elevation at 668.38-ft (Drawing H-2-44687). If the tanks are assumed to be filled to the overflow invert elevation and evaporation neglected, then the remaining waste heel volume in each tank would be 35.24 gallons. For this estimate tank internals, tank wall, and the 4-in overflow piping (Drawing H-2-44687) are assumed to occupy negligible volume compared to the tank heel volume.

$$Waste\ Heel\ Volume = (\pi\ x\ (\ (30\ in/2)^2)/144\ in^2/ft^2\ )\ x\ (668.38\ ft - 667.42\ ft)\ x\ 7.48\ \ gallons/ft^3$$

$$Waste\ Heel\ Volume = 35.24\ gallons$$

$$Waste\ Heel\ Volume\ for\ two\ identical\ diverter\ tanks = 35.24\ gallons\ x\ 2$$
$$Waste\ Heel\ Volume\ for\ two\ identical\ diverter\ tanks = 71\ gallons$$
$$Waste\ Heel\ Volume\ for\ two\ identical\ diverter\ tanks = 71\ gallons/(1000\ gallons/kilogallon$$
$$Waste\ Heel\ Volume\ for\ two\ identical\ diverter\ tanks =< 0.1\ kilogallons$$

3.12 241-AZ-151 DIVERTER STATION

PCSACS Level Reading = 22.94-in
PCSACS Level Reading Date = 2013-10-30

Calibration Table: ECN-627576, Rev.0, *Incorporation and Revision of Catch Tank Specification Limits / N1853*, page 8

22-in = 2007 gallons
23-in = 2097 gallons

$$PCSACS\ Level\ Reading = 22.94 - in = 2007\ gallons + 0.94\ x\ (2097 - 2007\ gallons)$$
$$Waste\ Volume = 22.94 - in = 2092\ gallons$$
$$Waste\ Volume = 2092\ gallons/(1000\ gallons/kilogallon)$$
$$Waste\ Volume = 2.1\ kilogallons$$

241-AZ-151 Diverter Station Calibration Table

ECN 627576
Page 8 of 8

TANK: 151-AZ Catch Tank

NOMINAL TANK CAPACITY: 12,000 Gal. DRAWING: H-2-68316
50% 6075 Gal. 80% 9630 Gal.

LIT	GALLONS	LIT	GALLONS	LIT	GALLONS
0	130	44	3982	89	8022
1	170	45	4072	90	8112
2	212	46	4162	91	8201
3	302	47	4251	92	8291
4	391	48	4341	93	8381
5	481	49	4431	94	8471
6	571	50	4521	95	8560
7	661	51	4610	96	8650
8	750	52	4700	97	8740
9	840	53	4790	98	8830
10	930	54	4880	99	8919
11	1020	55	4970	100	9009
12	1109	56	5059	101	9099
13	1199	57	5149	102	9189
14	1289	58	5239	103	9279
15	1379	59	5329	104	9369
16	1469	60	5418	105	9459
17	1558	61	5508	106	9549
18	1648	62	5598	107	9639
19	1738	63	5688	108	9729
20	1828	64	5777	109	9819
21	1917	65	5867	110	9909
22	2007	66	5957	111	9999
23	2097	67	6047	112	10089
24	2187	68	6137	113	10179
25	2276	69	6226	114	10269
26	2366	70	6316	115	10359
27	2456	71	6406	116	10449
28	2546	72	6496	117	10539
29	2636	73	6585	118	10629
30	2725	74	6675	119	10719
31	2815	75	6765	120	10809
32	2905	76	6854	121	10899
33	2995	77	6944	122	10989
34	3084	78	7034	123	11079
35	3174	79	7124	124	11169
36	3264	80	7214	125	11259
37	3354	81	7304	126	11349
38	3443	82	7393	127	11439
39	3533	83	7483	128	11529
40	3623	84	7573	129	11619
41	3713	85	7663	130	11709
42	3803	86	7752	131	11799
43	3892	87	7842	132	11889
		88	7932	133	11979

3.13 241-AZ-154

PCSACS Level Reading = 0-in
PCSACS Level Reading Date = 2008-07-31

Calibration Table: ECN-630520, Rev. 0, *Incorporation of Catch Tank Specification Limits in SD-WM-TI-352, N1743*, page 9

$$PCSACS\ Level\ Reading = 0 - in = 25\ gallons$$
$$Waste\ Volume = 25\ gallons/(1000\ gallons/killogallon)$$
$$Waste\ Volume = < 0.1\ kilogallons$$

241-AZ-154 Calibration Table

ECN 630520, pg #9

(42)

TANK(S) 241-AZ-154
Date of Calibration: Calculated

NOMINAL TANK CAPACITY: 867, Incl. Sump Gal. DIMENSIONS: 5' X 5'
50%: 446 Gal. 80%: 699 Gal. 54" Deep
REF. DWG. #: H-2-68315 SHAPE/POSITION: Cubical

LEVEL MEASUREMENT: ☐ Manual Tape ☐ FIC Transmitter Range:

in.	gal	in.	gal	in.	gal	SUMP	
0"	25	20"	337	40"	648	in.	gal
1"	41	21"	352	41"	664	1"	2.5
2"	56	22"	368	42"	680	2"	5.0
3"	72	23"	383	43"	695	3"	7.5
4"	87	24"	399	44"	711	4"	10.0
5"	103	25"	415	45"	726	5"	12.5
6"	118	26"	430	46"	742	6"	15.0
7"	134	27"	446	47"	757	7"	17.5
8"	150	28"	461	48"	773	8"	20.0
9"	165	29"	477	49"	789	9"	22.5
10"	181	30"	493	50"	804	10"	25.0
11"	196	31"	508	51"	820		
12"	212	32"	524	52"	835		
13"	228	33"	539	53"	851		
14"	243	34"	555	54"	867		
15"	259	35"	570				
16"	274	36"	586				
17"	290	37"	602				
18"	305	38"	617				
19"	321	39"	633				

3.14 241-AZ-301

Tank 241-AZ-301 is routinely filled with 241-AZ-702 ventilation system condensate and was automatically pumped to either tank 241-AY-101 or 241-AZ-102 until January, 2014, when the discharge was rerouted to an over-the-road tanker for transport to the Effluent Treatment Facility, eliminating the return to either double-shell tank. The tank volume including both cylindrical heads is 1,206 gallons (ECN E525-1-016 Rev. 1; Drawing H-14-105767 Rev. 1). Continuous fill and empty cycles in the tank make reporting a waste level volume impractical.

3.15 241-B-301 (241-B301-B)

Stabilization Evaluation Form: 1985-04-29
Solids Level Reading = 0-in
Solids Level Reading Date = 1984-08
Waste Level ("Liquid Level") Reading = 2.75-in
Waste Level ("Liquid Level") Reading Date = 1985-04-24

Calibration Table: ECN-630520, *Incorporation of Catch Tank Specification Limits in SD-WM-TI-352, N1743*, page 13, or alternatively, SD-RE-TI-057 Rev. 0, Table 9, contains applicable calibration table

2-in = 392 gallons
3-in = 588 gallons

$$Waste\ Volume = 2.75 - in = 392\ gallons + 0.75\ x\ (588 - 392\ gallons)$$
$$Waste\ Volume = 539\ gallons$$
$$Waste\ Volume = 539\ gallons/(1000\ gallons/kilogallon)$$
$$Waste\ Volume = 0.54\ kilogallons$$

$$Solids\ Volume = 0 - in = 0\ gallons$$

$$Liquid\ Volume = Waste\ Volume - Solids\ Volume$$
$$Liquid\ Volume = 539 - 0\ gallons$$
$$Liquid\ Volume = 539\ gallons$$

241-B-301 (241-B301-B) Calibration Table

ECN 630520, pg #13 (47)

TANK(S) Group 3: 301's, 361's B, C, T, U (including 241-U-301-B)
Date of Calibration: Calculated

NOMINAL TANK CAPACITY: 36,430 Gal. DIMENSIONS: 20' O.D.
50%: 18,215 Gal. 80%: 29,144 Gal. 15'6" High @ Overflow
REF. DWG. #: W-72903 SHAPE/POSITION: Vert/Flat Btm.

LEVEL MEASUREMENT: ☐ Manual Tape ☐ FIC Transmitter Range:

in.	gal	in.	gal	in.	gal	in.	gal	in.	gal
1"	196	25"	4897	49"	9597	73"	14298	97"	18999
2"	392	26"	5092	50"	9793	74"	14494	98"	19194
3"	588	27"	5288	51"	9989	75"	14690	99"	19390
4"	783	28"	5484	52"	10185	76"	14886	100"	19586
5"	979	29"	5680	53"	10381	77"	15081	101"	19782
6"	1175	30"	5876	54"	10577	78"	15277	102"	19978
7"	1371	31"	6072	55"	10772	79"	15473	103"	20174
8"	1567	32"	6268	56"	10968	80"	15669	104"	20370
9"	1763	33"	6463	57"	11164	81"	15865	105"	20566
10"	1959	34"	6659	58"	11360	82"	16061	106"	20761
11"	2154	35"	6855	59"	11556	83"	16257	107"	20957
12"	2350	36"	7051	60"	11752	84"	16452	108"	21153
13"	2546	37"	7247	61"	11948	85"	16648	109"	21349
14"	2742	38"	7443	62"	12143	86"	16844	110"	21545
15"	2938	39"	7639	63"	12339	87"	17040	111"	21741
16"	3134	40"	7834	64"	12535	88"	17236	112"	21937
17"	3330	41"	8030	65"	12731	89"	17432	113"	22132
18"	3526	42"	8226	66"	12927	90"	17628	114"	22328
19"	3721	43"	8422	67"	13123	91"	17823	115"	22524
20"	3917	44"	8618	68"	13319	92"	18019	116"	22720
21"	4113	45"	8814	69"	13514	93"	18215	117"	22916
22"	4309	46"	9010	70"	13710	94"	18411	118"	23112
23"	4505	47"	9206	71"	13906	95"	18607	119"	23308
24"	4701	48"	9401	72"	14102	96"	18803	120+	+196/in

Tank sides are straight @ approx. 196 gal/inch.

241-B-301 (241-B301-B) Stabilization Evaluation Form

STABILIZATION EVALUATION FORM

Tank: B-301-B

Evaluation (see continuation page for calculations and additional comments):

(X) Tank history review completed

(X) Tank composition data reviewed

Tank Description: CATCH TANK

Solids Level: 0" Date: 8-84 Method: MANUAL TAPE

Liquid Level: 2.75" Date: 4-24-85 Method: Zip Cord

Estimated Supernatant Volume (gal): 539

Interim Stabilization Criteria: 4 inches
(400 gallons or the volume of four inches of supernatant, whichever is greater)

( ) Cost/Benefit Analysis attached

Evaluation performed by: Allen T. Alstad Date: 4-25-85

Checked by: [illegible] Date: 4/25/85

Disposition of Tank:

(X) Tank Interim Stabilized at 539 gallons of supernatant liquid

( ) Tank not Interim Stabilized; stabilization activities resumed

Approved by: RAN [illegible] Manager, TF&EPC — 4-26-85 Date

[illegible] Manager, TFS&O — 4-26-85 Date

[illegible] Program Manager — 4-29-85 Date

DISTRIBUTION: TF&EPC Tank File, Tank Farm Surveillance Analysis, Approval Signatures

W-72903

3.16 241-B-302-B

Stabilization Evaluation Form: 1985-05-16
Solids Level Reading = 9-in
Solids Level Reading Date = 1984-08
Waste Level ("Liquid Level") Reading = 35-in
Waste Level ("Liquid Level") Reading Date = 1985-05-10

Calibration Table: WRPS-0901391, *Tank Farm Catch Tank Calibrations*, page 5

9-in = 681 gallons
35-in = 4969 gallons

$$Waste\ Volume = 35 - in = 4969\ gallons$$
$$Waste\ Volume = 4969\ gallons/(1000\ gallons/kilogallon)$$
$$Waste\ Volume = 5.0\ kilogallons$$

$$Solids\ Volume = 9 - in = 681\ gallons$$

$$Liquid\ Volume = Waste\ Volume - Solids\ Volume$$
$$Liquid\ Volume = 4969\ gallons - 681\ gallons$$
$$Liquid\ Volume = 4288\ gallons$$

241-B-302-B Calibration Table

D.J. Washenfelder
Page 5
August 14, 2009

WRPS-0901391

Tank 241-B-302

Date of Calibration: Calculated

NOMINAL TANK CAPACITY: 17662 Gal.

50%: 8817 Gal. 80%: 14995 Gal.

REF. DWG #: D-61628

DIMENSIONS 9.0' O.D.
36' long
8'6" radius

in.	gal	in.	gal	in.	gal	in.	gal	in.	gal
1	21	23	2730	45	7018	67	11657	89	15733
2	67	24	2904	46	7228	68	11861	90	15887
3	127	25	3080	47	7439	69	12065	91	16038
4	198	26	3259	48	7650	70	12267	92	16184
5	279	27	3440	49	7861	71	12468	93	16327
6	369	28	3624	50	8068	72	12668	94	16465
7	466	29	3810	51	8283	73	12865	95	16598
8	570	30	3999	52	8497	74	13062	96	16726
9	681	31	4189	53	8711	75	13256	97	16849
10	797	32	4381	54	8924	76	13449	98	16967
11	920	33	4576	55	9137	77	13639	99	17078
12	1047	34	4772	56	9349	78	13828	100	17183
13	1180	35	4969	57	9562	79	14014	101	17281
14	1317	36	5168	58	9774	80	14198	102	17372
15	1459	37	5369	59	9985	81	14380	103	17454
16	1605	38	5571	60	10240	82	14559	104	17527
17	1755	39	5775	61	10407	83	14736	105	17588
18	1909	40	5979	62	10618	84	14910	106	17636
19	2067	41	6185	63	10827	85	15081	107	17662
20	2228	42	6392	64	11036	86	15249		
21	2392	43	6600	65	11244	87	15414		
22	2560	44	6808	66	11451	88	15575		

241-B-302-B Stabilization Evaluation Form

STABILIZATION EVALUATION FORM

Tank: B-302-B

Evaluation (see continuation page for calculations and additional comments):

(X) Tank history review completed

(X) Tank composition data reviewed

Tank Description: CATCH TANK

Solids Level: 9" Date: 8-84 Method: MANUAL TAPE

Liquid Level: 15" Date: 5-10-85 Method: ZIP CORD

Estimated Supernatant Volume (gal): 4240 gal

Interim Stabilization Criteria: 4240 gal.
(400 gallons or the volume of four inches of supernatant, whichever is greater or 5000 gallons as specified by para 3.1.1 of EPM 4-6, dtd June 22, 1984.

( ) Cost/Benefit Analysis attached

Evaluation performed by: [illegible] Date: 5-13-85

Checked by: [illegible] Date: 5-13-85

Disposition of Tank:

(✓) Tank Interim Stabilized at 4240 gallons of supernatant liquid

( ) Tank not Interim Stabilized; stabilization activities resumed

Approved by: RAV [illegible] Manager, TF&EPC — 5/14/85 Date

[illegible] Manager, TPS&O — 5/16/85 Date

RD [illegible] Program Manager — 5/16/85 Date

DISTRIBUTION: TF&EPC Tank File, Tank Farm Surveillance Analysis, Approval Signatures

H-W-77092

EVALUATION CALCULATIONS AND COMMENTS

Tank: B-302B

Tank Geometry:
TOP OF RISER TO BOTTOM OF TANK 26.98

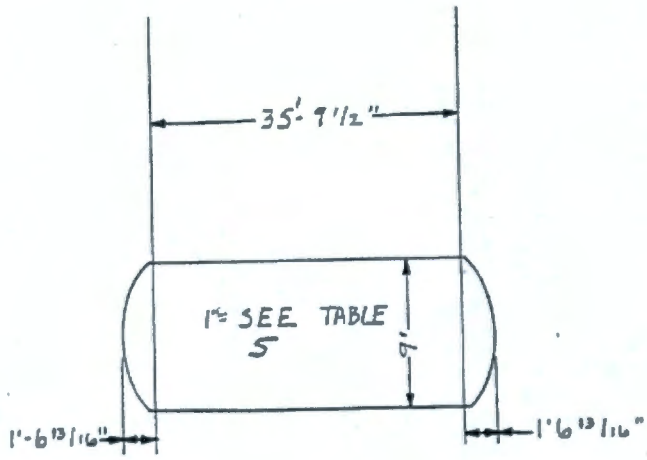

Calculations made by: Allen T. Gilstad

Checked by: [illegible] 5-13-85

The radiation level on the top of the tanker truck was 1.5 Rad/hr, and because of this, shielding was 1 16"

TABLE V

Calibration of 9' Diameter, 35'9 1/2" long between rounded ends.
Horizontal Tanks S-302, S-302-A, TX-302, TX-302-C, TX-302-B, UX-302-R, TY-302-A, B-302-B, BX-302-A, 311-ER SX-304

Feet	Inches	Gallons	Feet	Inches	Gallons
	1	27	2	4	3600
	2	74		5	3790
	3	135		6	3970
	4	205		7	4160
	5	290		8	4350
	6	375		9	4540
	7	475		10	4740
	8	580		11	4930
	9	690	3	0	5130
	10	805		1	5320
	11	925		2	5520
1	0	1050		3	5720
	1	1185		4	5930
	2	1320		5	6130
	3	1460		6	6340
	4	1600		7	6540
	5	1750		8	6750
	6	1900		9	6960
	7	2060		10	7160
	8	2220		11	7370
	9	2380	4	0	7580
	10	2550		1	7790
	11	2720		2	8000 45%
2	0	2890		3	8210
	1	3060		4	8420
	2	3240		5	8630
	3	3420		6	8840 50%

Maximum Liquid Volume 8840 gallons
Tank Capacity 17684 gallons

14.30 = 1355
14 75 = 1425 = 70 gal

3.17 241-BX-302-A

Stabilization Evaluation Form: 1985-03-15
Solids Level Reading = 10.25-in
Solids Level Reading Date = 1984-03-14
Waste Level ("Liquid Level") Reading = 10.25-in
Waste Level ("Liquid Level") Reading Date = 1984-03-14

Calibration Table: WRPS-0901391, *Tank Farm Catch Tank Calibrations*, page 6

10-in = 797 gallons
11-in = 920 gallons

$$Waste\ Volume = 10.25 - in = 797\ gallons + 0.25\ x\ (920 - 797\ gallons)$$
$$Waste\ Volume = 828\ gallons$$
$$Waste\ Volume = 828\ gallons/(1000\ gallons/kilogallon)$$
$$Waste\ Volume = 0.83\ kilogallons$$

$$Solids\ Volume = 10.25 - in = 828\ gallons$$

$$Liquid\ Volume = Waste\ Volume - Solids\ Volume$$
$$Liquid\ Volume = 828\ gallons - 828\ gallons$$
$$Liquid\ Volume = 0\ gallons$$

241-BX-302-A Calibration Table

D.J. Washenfelder
Page 6
August 14, 2009

WRPS-0901391

Tank 241-BX-302A

Date of Calibration: Calculated

NOMINAL TANK CAPACITY: 17662 Gal.

50%: 8817 Gal. 80%: 14995 Gal.

REF. DWG #: H-2-619

DIMENSIONS 9.0' O.D.
36' long
8'6" radius

in.	gal	in.	gal	in.	gal	in.	gal	in.	gal
1	21	23	2730	45	7018	67	11657	89	15733
2	67	24	2904	46	7228	68	11861	90	15887
3	127	25	3080	47	7439	69	12065	91	16038
4	198	26	3259	48	7650	70	12267	92	16184
5	279	27	3440	49	7861	71	12468	93	16327
6	369	28	3624	50	8068	72	12668	94	16465
7	466	29	3810	51	8283	73	12865	95	16598
8	570	30	3999	52	8497	74	13062	96	16726
9	681	31	4189	53	8711	75	13256	97	16849
10	797	32	4381	54	8924	76	13449	98	16967
11	920	33	4576	55	9137	77	13639	99	17078
12	1047	34	4772	56	9349	78	13828	100	17183
13	1180	35	4969	57	9562	79	14014	101	17281
14	1317	36	5168	58	9774	80	14198	102	17372
15	1459	37	5369	59	9985	81	14380	103	17454
16	1605	38	5571	60	10240	82	14559	104	17527
17	1755	39	5775	61	10407	83	14736	105	17588
18	1909	40	5979	62	10618	84	14910	106	17636
19	2067	41	6185	63	10827	85	15081	107	17662
20	2228	42	6392	64	11036	86	15249		
21	2392	43	6600	65	11244	87	15414		
22	2560	44	6808	66	11451	88	15575		

241-BX-302-A Stabilization Evaluation Form

STABILIZATION EVALUATION FORM

Tank: BX-302A

Evaluation (see continuation page for calculations and additional comments):

(X) Tank history review completed

(X) Tank composition data reviewed

Tank Description: CATCH TANK

Solids Level: 10¼" Date: 3-14-84 Method: DOUGHNUT

Liquid Level: 10¼" Date: 3-14-84 Method: ZIP CORD

Estimated Supernatant Volume (gal): Ø

Interim Stabilization Criteria: 4"
(400 gallons or the volume of four inches of supernatant, whichever is greater)

( ) Cost/Benefit Analysis attached

Evaluation performed by: [illegible] Date: 3-14-85

Checked by: [illegible] Date: 3-14-85

Disposition of Tank:

(X) Tank Interim Stabilized at Ø gallons of supernatant liquid

( ) Tank not Interim Stabilized; stabilization activities resumed

Approved by: [illegible] 3/14/85
Manager, TF&EPC Date

[illegible] 3/15/85
Manager, TFS&O Date

[illegible] 3/15/85
Program Manager Date

DISTRIBUTION: TF&EPC Tank File, Tank Farm Surveillance Analysis, Approval Signatures

H-2-618

EVALUATION CALCULATIONS AND COMMENTS

Tank: BX-302-A

Tank Geometry:
TOP OF RISER TO BOTTOM OF TANK 26.9'

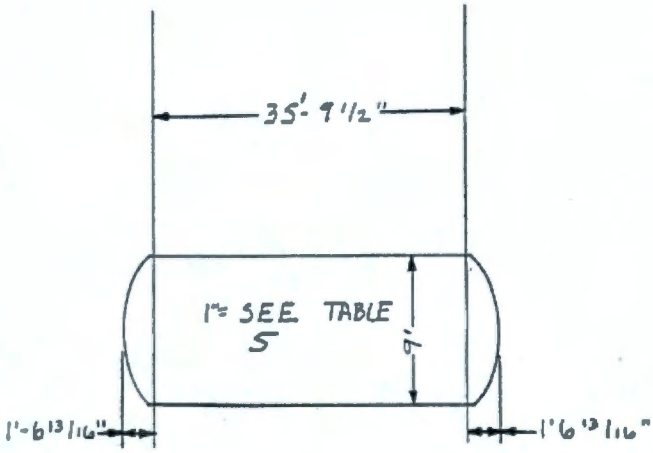

Calculations made by: D.W. FURUMOTO

Checked by: [illegible] 3-14-85

3.18 241-BX-302-B

Stabilization Evaluation Form: 1985-05-08
Solids Level Reading = 17.00-in
Solids Level Reading Date = 1984-08
Waste Level ("Liquid Level") Reading = 18.00-in
Waste Level ("Liquid Level") Reading Date = 1985-05-08

Calibration Table: WRPS-0901391, *Tank Farm Catch Tank Calibrations*, page 7

17-in = 922 gallons
18-in = 1003 gallons

$$Waste\ Volume = 18.00 - in = 1003\ gallons$$
$$Waste\ Volume = 1003\ gallons/(1000\ gallons/kilogallon)$$
$$Waste\ Volume = 1.0\ kilogallons$$

$$Solids\ Volume = 17.00 - in = 922\ gallons$$

$$Liquid\ Volume = Waste\ Volume - Solids\ Volume$$
$$Liquid\ Volume = 1003\ galloms - 922\ gallons$$
$$Liquid\ Volume = 81\ gallons$$

241-BX-302-B Calibration Table

D.J. Washenfelder
Page 7
August 14, 2009

WRPS-0901391

Tanks: 241-BX-302B, 241-BX-302C

Date of Calibration: Calculated

NOMINAL TANK CAPACITY: 10839 Gal.

50%: 5493 Gal. 80%: 9454 Gal.

REF. DWG #: H-636

DIMENSIONS 10'0" O.D.
18'0" Long
10'0" Radius

in.	gal	in.	gal	in.	gal	in.	gal	in.	gal
1	13	25	1627	49	4238	73	7101	97	9638
2	37	26	1722	50	4357	74	7217	98	9727
3	69	27	1820	51	4475	75	7333	99	9815
4	106	28	1919	52	4594	76	7448	100	9900
5	148	29	2019	53	4713	77	7562	101	9983
6	195	30	2120	54	4833	78	7676	102	10065
7	245	31	2223	55	4953	79	7789	103	10144
8	300	32	2327	56	5073	80	7901	104	10221
9	357	33	2432	57	5193	81	8012	105	10296
10	418	34	2539	58	5313	82	8123	106	10368
11	482	35	2646	59	5433	83	8232	107	10437
12	549	36	2755	60	5554	84	8341	108	10504
13	619	37	2864	61	5674	85	8448	109	10568
14	691	38	2975	62	5794	86	8554	110	10629
15	766	39	3086	63	5914	87	8660	111	10687
16	843	40	3198	64	6034	88	8764	112	10741
17	922	41	3311	65	6154	89	8866	113	10792
18	1003	42	3425	66	6273	90	8968	114	10839
19	1087	43	3539	67	6393	91	9068	115	10881
20	1172	44	3654	68	6512	92	9167	116	10918
21	1260	45	3770	69	6630	93	9264	117	10950
22	1349	46	3886	70	6748	94	9360	118	10974
23	1440	47	4003	71	6866	95	9454	119	10987
24	1532	48	4120	72	6984	96	9547		

241-BX-302-B Stabilization Evaluation Form

STABILIZATION EVALUATION FORM

Tank: BX-302-B

Evaluation (see continuation page for calculations and additional comments):

(X) Tank history review completed

(X) Tank composition data reviewed

Tank Description: CATCH TANK

Solids Level: 17.00" Date: 8-84 Method: MANUAL TAPE

Liquid Level: 18.00" Date: 5-8-85 Method: MANUAL TAPE

Estimated Supernatant Volume (gal): 94

Interim Stabilization Criteria: 1 inch
(400 gallons or the volume of four inches of supernatant, whichever is greater)

( ) Cost/Benefit Analysis attached

Evaluation performed by: Allen T. Alstad Date: 5-8-85

Checked by: [illegible] Date: 5-8-85

Disposition of Tank:

(✓) Tank Interim Stabilized at 94 gallons of supernatant liquid

( ) Tank not Interim Stabilized; stabilization activities resumed

Approved by: [illegible] 5-8-85
Manager, TF&EPC Date

[illegible] 5-8-85
Manager, TFS&O Date

[illegible] 5-8-85
Program Manager Date

DISTRIBUTION: TF&EPC Tank File, Tank Farm Surveillance Analysis, Approval Signatures

H-2-636

EVALUATION CALCULATIONS AND COMMENTS

Tank: BX-302-B

Tank Geometry:

TOP OF RISER TO BOTTOM OF TANK 29.75

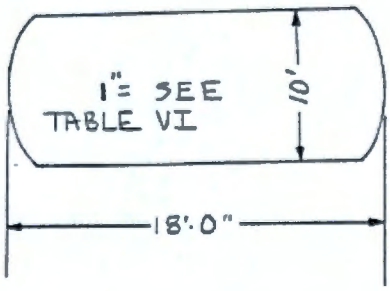

Calculations made by: Allen T. Abel 5-8-85

Checked by: [illegible] 5-8-85

24'-9"

3.19 241-BX-302-C

Stabilization Evaluation Form: 1985-04-15
Solids Level Reading = 13-in
Solids Level Reading Date = 1985-04-11
Waste Level ("Liquid Level") Reading = 16-in
Waste Level ("Liquid Level") Reading = 1985-04-11

Calibration Table: WRPS-0901391, *Tank Farm Catch Tank Calibrations*, page 7

13-in = 619 gallons
16-in = 843 gallons

$$Waste\ Volume = 16 - in = 843\ gallons$$
$$Waste\ Volume = 843\ gallons/(1000\ gallons/kilogallon)$$
$$Waste\ Volume = 0.84\ kilogallons$$

$$Solids\ Volume = 13 - in = 619\ gallons$$

$$Liquid\ Volume = Waste\ Volume - Solids\ Volume$$
$$Liquid\ Volume = 843\ galloms - 619\ gallons$$
$$Liquid\ Volume = 224\ gallons$$

241-BX-302-C Calibration Table

D.J. Washenfelder
Page 7
August 14, 2009

WRPS-0901391

Tanks: 241-BX-302B, 241-BX-302C

Date of Calibration: Calculated

NOMINAL TANK CAPACITY: 10839 Gal.

50%: 5493 Gal. 80%: 9454 Gal.

REF. DWG #: H-636

DIMENSIONS 10'0" O.D.
18'0" Long
10'0" Radius

in.	gal	in.	gal	in.	gal	in.	gal	in.	gal
1	13	25	1627	49	4238	73	7101	97	9638
2	37	26	1722	50	4357	74	7217	98	9727
3	69	27	1820	51	4475	75	7333	99	9815
4	106	28	1919	52	4594	76	7448	100	9900
5	148	29	2019	53	4713	77	7562	101	9983
6	195	30	2120	54	4833	78	7676	102	10065
7	245	31	2223	55	4953	79	7789	103	10144
8	300	32	2327	56	5073	80	7901	104	10221
9	357	33	2432	57	5193	81	8012	105	10296
10	418	34	2539	58	5313	82	8123	106	10368
11	482	35	2646	59	5433	83	8232	107	10437
12	549	36	2755	60	5554	84	8341	108	10504
13	619	37	2864	61	5674	85	8448	109	10568
14	691	38	2975	62	5794	86	8554	110	10629
15	766	39	3086	63	5914	87	8660	111	10687
16	843	40	3198	64	6034	88	8764	112	10741
17	922	41	3311	65	6154	89	8866	113	10792
18	1003	42	3425	66	6273	90	8968	114	10839
19	1087	43	3539	67	6393	91	9068	115	10881
20	1172	44	3654	68	6512	92	9167	116	10918
21	1260	45	3770	69	6630	93	9264	117	10950
22	1349	46	3886	70	6748	94	9360	118	10974
23	1440	47	4003	71	6866	95	9454	119	10987
24	1532	48	4120	72	6984	96	9547		

241-BX-302-C Stabilization Evaluation Form

STABILIZATION EVALUATION FORM

Tank: BX-302-C

Evaluation (see continuation page for calculations and additional comments):

(X) Tank history review completed

(X) Tank composition data reviewed

Tank Description: CATCH TANKS

Solids Level: 13" Date: 4-11-85 Method: PANCAKE

Liquid Level: 16" Date: 4-11-85 Method: ZIP CORD

Estimated Supernatant Volume (gal): 230

Interim Stabilization Criteria: ACC. GAL.
(400 gallons or the volume of four inches of supernatant, whichever is greater)

( ) Cost/Benefit Analysis attached

Evaluation performed by: [illegible] Date: 4-12-85

Checked by: [illegible] Date: 12 Apr 85

Disposition of Tank:

(X) Tank Interim Stabilized at 230 gallons of supernatant liquid

( ) Tank not Interim Stabilized; stabilization activities resumed

Approved by: [illegible] Manager, TF&EPC — 4/12/85 Date

[illegible] Manager, TFS&O — 4-15-85 Date

[illegible] Program Manager — 4-15-85 Date

DISTRIBUTION: TF&EPC Tank File, Tank Farm Surveillance Analysis, Approval Signatures

Ref.: DRWG. : H-2-638

EVALUATION CALCULATIONS AND COMMENTS

Tank: BX-302 C

Tank Geometry:

TOP OF RISER TO BOTTOM OF TANK 24 41

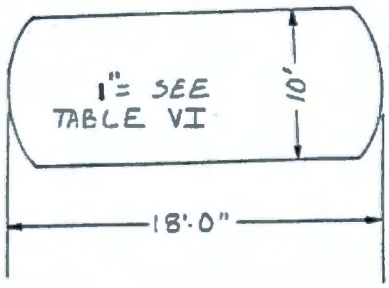

Calculations made by: [illegible] 4/85

Checked by:

H-2-638

3.20 241-BY-ITS2-TK-1

$Waste\ Volume - No\ data$

3.21 241-BY-ITS2-TK-2

Volume reported in RPP-RPT-31130, Rev. 0, *241-BY-ITS2-TK-2 Liquid Level Assessment*, as 777 gallons based on a zip cord measurement taken August 24, 2006.

No calibration table exists for tank; however the 40-in diameter vertical right cylindrical flat bottom tank liquid level increase is calculated as 5.44 gallon/inch neglecting volume displacement of internals (RPP-RPT-31130; Drawing H-2-34383).

$$Waste\ Volume/Vertical\ inch$$
$$= (\pi\ x\ (\ (40\ in/2)^2)/144\ in^2/ft^2\ )\ x\ (\ 1\ inch/12\ \ inches/ft)\ x\ 7.48\ \ gallons/ft^3$$

$$Waste\ Volume/Vertical\ inch = 5.44\ gallons$$

$$Waste\ Volume = 777\ gallons$$
$$Waste\ Volume = 777\ gallons/(1000\ gallons/kilogallon)$$
$$Waste\ Volume = 0.78\ kilogallons$$

3.22 241-C-301-C

Stabilization Evaluation Form: 1985-06-03
Solids Level Reading = 46-in
Solids Level Reading Date = 1985-05-21
Waste Level ("Liquid Level") Reading = 53.5-in
Waste Level ("Liquid Level") Reading Date = 1985-05-31

On September 29, 1995 a 24-ft zip cord was used to determine the waste level during a vapor sampling event.. No waste was detected, leading to speculation that the tank may have leaked. However the zip cord length was too short to reach the waste surface. A note on the Stabilization Evaluation Form states that the distance from the top of the riser to the tank bottom is 31.13-ft, so the zip cord was about 2-ft 8-in too short to reach the waste surface. Calculations using tank bottom, tank riser, and tank farm grade elevations from drawings H-2-1762, H-2-41126, and W-72182 Sheet 4 verify the 1995 error.

Calibration Table: ECN-630520, Rev. 0, *Incorporation of Catch Tank Specification Limits in SD-WM-TI-352, N1743*, page 13

46-in = 9016 gallons
53-in = 10388 gallons
54-in = 10584 gallons

$$Waste\ Volume = 53.5 - in = 10388\ gallons + 0.50\ x\ (10584 - 10388\ gallons)$$
$$Waste\ Volume = 10486\ gallons$$
$$Waste\ Volume = 10486\ gallons/(1000\ gallons/kilogallon)$$
$$Waste\ Volume = 10.5\ kilogallons$$

$$Solids\ Volume = 46 - in = 9016\ gallons$$

$$Liquid\ Volume = Waste\ Volume - Solids\ Volume$$
$$Liquid\ Volume = 10486 - 9016\ gallons$$
$$Liquid\ Volume = 1470\ gallons$$

241-C-301-C Calibration Table

ECN 630520, pg #13 (47)

TANK(S) Group 3: 301's, 361's B, C, T, U (including 241-U-301-B)
Date of Calibration: Calculated

NOMINAL TANK CAPACITY: 36,430 Gal. DIMENSIONS: 20' O.D.
50%: 18,215 Gal. 80%: 29,144 Gal. 15'6" High @ Overflow
REF. DWG. #: W-72903 SHAPE/POSITION: Vert/Flat Btm.

LEVEL MEASUREMENT: ☐ Manual Tape ☐ FIC Transmitter Range:

in.	gal	in.	gal	in.	gal	in.	gal	in.	gal
1"	196	25"	4897	49"	9597	73"	14298	97"	18999
2"	392	26"	5092	50"	9793	74"	14494	98"	19194
3"	588	27"	5288	51"	9989	75"	14690	99"	19390
4"	783	28"	5484	52"	10185	76"	14886	100"	19586
5"	979	29"	5680	53"	10381	77"	15081	101"	19782
6"	1175	30"	5876	54"	10577	78"	15277	102"	19978
7"	1371	31"	6072	55"	10772	79"	15473	103"	20174
8"	1567	32"	6268	56"	10968	80"	15669	104"	20370
9"	1763	33"	6463	57"	11164	81"	15865	105"	20566
10"	1959	34"	6659	58"	11360	82"	16061	106"	20761
11"	2154	35"	6855	59"	11556	83"	16257	107"	20957
12"	2350	36"	7051	60"	11752	84"	16452	108"	21153
13"	2546	37"	7247	61"	11948	85"	16648	109"	21349
14"	2742	38"	7443	62"	12143	86"	16844	110"	21545
15"	2938	39"	7639	63"	12339	87"	17040	111"	21741
16"	3134	40"	7834	64"	12535	88"	17236	112"	21937
17"	3330	41"	8030	65"	12731	89"	17432	113"	22132
18"	3526	42"	8226	66"	12927	90"	17628	114"	22328
19"	3721	43"	8422	67"	13123	91"	17823	115"	22524
20"	3917	44"	8618	68"	13319	92"	18019	116"	22720
21"	4113	45"	8814	69"	13514	93"	18215	117"	22916
22"	4309	46"	9010	70"	13710	94"	18411	118"	23112
23"	4505	47"	9206	71"	13906	95"	18607	119"	23308
24"	4701	48"	9401	72"	14102	96"	18803	120+	+196/in

Tank sides are straight @ approx. 196 gal/inch.

241-C-301-C Stabilization Evaluation Form

STABILIZATION EVALUATION FORM

Tank: C-301

Evaluation (see continuation page for calculations and additional comments):

(X) Tank history review completed

(X) Tank composition data reviewed

Tank Description: CATCH TANK

Solids Level: 3'-10" Date: 5-21-85 Method: Pancake

Liquid Level: 4'-5½" Date: 5-31-85 Method: Zip Cord

Estimated Supernatant Volume (gal): 1421 gal.

Interim Stabilization Criteria: 5000 gal
(400 gallons or the volume of four inches of supernatant, whichever is greater) or 5000 gallons as specified by para 3.1.1 of EPM 4.6, dated June 22, 1984

( ) Cost/Benefit Analysis attached

Evaluation performed by: Allen T. Allstad Date: 6-3-85

Checked by: [illegible] Date: 6-3-85

Disposition of Tank:

(X) Tank Interim Stabilized at 1421 gallons of supernatant liquid

( ) Tank not Interim Stabilized; stabilization activities resumed

Approved by: [illegible] for Manager, TF&EPC — 6/3/85 Date

[illegible] Manager, TFS&O — 6/3/85 Date

[illegible] for RD Wojtasek Program Manager — 6-3-85 Date

DISTRIBUTION: TF&EPC Tank File, Tank Farm Surveillance Analysis, Approval Signatures

REF: H-1W-72182, Sheet 4

EVALUATION CALCULATIONS AND COMMENTS

Tank: 241-C-301

Tank Geometry:

TOP OF RISER TO BOTTOM OF TANK 31.13

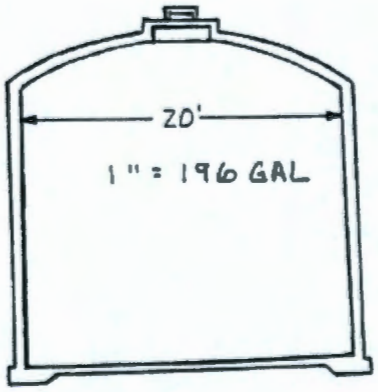

Calculations made by: Allen T. Akers

Checked by: Evelyn Weiss 6/5/85

3.23 241-ER-311

Tank was evaporated to dryness between October 13, 2006 and February 15, 2007, and dry condition confirmed visually March 7, 2007 (Letter 07-TOD-026, S. J. Olinger DOE-ORP to J. A. Hedges, *Submittal of Notification of Completion of Liquid Removal from Catch Tank 241-ER*-311, dated March 30, 2007)

PCSACS Level Reading = 0.14-in
PCSACS Level Reading Date = 2014-03-05

Calibration Table: ECN-630520, Rev. 0, *Incorporation of Catch Tank Specification Limits in SD-WM-TI-352, N1743*, page 12

0-in = 0 gallons
1-in = 27 gallons

$$PCSACS\ Level\ Reading = 0\ gallons + 0.14\ x\ (27 - 0\ gallons)$$
$$Waste\ Volume = 3.8\ gallons$$
$$Waste\ Volume = 3.8\ gallons/(1000\ gallons/kilogallon)$$
$$Waste\ Volume = < 0.1\ kilogallons$$

241-ER-311 Calibration Table

ECN 630520, pg #12 (48)

TANK(S) Group 2 (including 311-ER, 241-TX-302-C and 241-UX-302-A)
Date of Calibration: Calculated

NOMINAL TANK CAPACITY: 17,670 Gal. DIMENSIONS: 9' O.D.
50%: 8,835 Gal. 80%: 14,136 Gal. 35' 9½" Btwn. Ends
REF. DWG. #: H-2-2268 SHAPE/POSITION: Horiz/Rnd. Ends

LEVEL MEASUREMENT: ☐ Manual Tape ☐ FIC Transmitter Range:

in.	gal	in.	gal	in.	gal	in.	gal	in.	gal
1"	27	23"	2752	45"	6969	67"	11517	89"	15577
2"	75	24"	2924	46"	7174	68"	11719	90"	15734
3"	138	25"	3098	47"	7381	69"	11919	91"	15888
4"	211	26"	3275	48"	7587	70"	12119	92"	16038
5"	295	27"	3454	49"	7795	71"	12317	93"	16184
6"	386	28"	3636	50"	8002	72"	12514	94"	16326
7"	485	29"	3820	51"	8210	73"	12710	95"	16464
8"	591	30"	4005	52"	8418	74"	12904	96"	16597
9"	703	31"	4193	53"	8626	75"	13097	97"	16725
10"	821	32"	4382	54"	8835	76"	13288	98"	16849
11"	945	33"	4573	55"	9044	77"	13477	99"	16967
12"	1073	34"	4766	56"	9252	78"	13665	100"	17079
13"	1206	35"	4960	57"	9460	79"	13850	101"	17185
14"	1344	36"	5156	58"	9668	80"	14034	102"	17284
15"	1486	37"	5353	59"	9875	81"	14216	103"	17375
16"	1632	38"	5551	60"	10083	82"	14395	104"	17459
17"	1782	39"	5751	61"	10289	83"	14572	105"	17532
18"	1936	40"	5951	62"	10496	84"	14746	106"	17595
19"	2093	41"	6153	63"	10701	85"	14918	107"	17643
20"	2253	42"	6356	64"	10906	86"	15087	108"	17670
21"	2416	43"	6559	65"	11111	87"	15254		
22"	2583	44"	6764	66"	11314	88"	15417		

3.24 241-ER-311A

Waste Volume – No data

There is no calibration table for this tank. However the tank is nearly identical dimensionally to Tank ER-311, and ECN-630520, page 12, could be used. Drawing H-2-43108 shows Tank ER-311A is 9-ft o.d. by 9/16-in thick, and 35-ft 8-1/2-in between the straight flanges on the ASME dished heads. Drawing E-559 shows Tank ER-311 is 9-ft o.d. by ½-in thick, and 35-ft 8-1/16-in between the straight flanges on the ASME dished heads.

Calibration Table: ECN-630520, Rev. 0, *Incorporation of Catch Tank Specification Limits in SD-WM-TI-352, N1743*, page 12

241-ER-311A Calibration Table

ECN 630520, pg #12 (48)

TANK(S) Group 2 (including 311-ER, 241-TX-302-C and 241-UX-302-A)
Date of Calibration: Calculated

NOMINAL TANK CAPACITY: 17,670 Gal. DIMENSIONS: 9' O.D.
50%: 8,835 Gal. 80%: 14,136 Gal. 35' 9¼" Btwn. Ends
REF. DWG. #: H-2-2268 SHAPE/POSITION: Horiz/Rnd. Ends

LEVEL MEASUREMENT: ☐ Manual Tape ☐ FIC Transmitter Range:

in.	gal	in.	gal	in.	gal	in.	gal	in.	gal
1"	27	23"	2752	45"	6969	67"	11517	89"	15577
2"	75	24"	2924	46"	7174	68"	11719	90"	15734
3"	138	25"	3098	47"	7381	69"	11919	91"	15888
4"	211	26"	3275	48"	7587	70"	12119	92"	16038
5"	295	27"	3454	49"	7795	71"	12317	93"	16184
6"	386	28"	3636	50"	8002	72"	12514	94"	16326
7"	485	29"	3820	51"	8210	73"	12710	95"	16464
8"	591	30"	4005	52"	8418	74"	12904	96"	16597
9"	703	31"	4193	53"	8626	75"	13097	97"	16725
10"	821	32"	4382	54"	8835	76"	13288	98"	16849
11"	945	33"	4573	55"	9044	77"	13477	99"	16967
12"	1073	34"	4766	56"	9252	78"	13665	100"	17079
13"	1206	35"	4960	57"	9460	79"	13850	101"	17185
14"	1344	36"	5156	58"	9668	80"	14034	102"	17284
15"	1486	37"	5353	59"	9875	81"	14216	103"	17375
16"	1632	38"	5551	60"	10083	82"	14395	104"	17459
17"	1782	39"	5751	61"	10289	83"	14572	105"	17532
18"	1936	40"	5951	62"	10496	84"	14746	106"	17595
19"	2093	41"	6153	63"	10701	85"	14918	107"	17643
20"	2253	42"	6356	64"	10906	86"	15087	108"	17670
21"	2416	43"	6559	65"	11111	87"	15254		
22"	2583	44"	6764	66"	11314	88"	15417		

3.25 244-A-TK

PCSACS Level Reading = 53.34-in (as uncorrected weight factor)
PCSACS Level Reading Date = 2013-11-12

Tank 244-A uses weight factor/specific gravity instrumentation located at position M (Drawing H-2-38229) to determine waste level in the tank. The weight factor leg terminates 1-in above the side of dished tank bottom (Drawing H-2-38217) and 14.01-in above tank bottom based on SolidWorks™ analysis. When the weight factor = 0-in, the tank contains 380.4 gallons of waste, uncorrected for specific gravity.

The PCSACS weight factor data do not indicate that they have been corrected for the liquid specific gravity. Unless the liquid is water, the reported waste level will be higher than the actual waste level by the ratio of the density of the tank liquid to the density of water at the same temperature. Thus the "uncorrected" weight factor reports a higher than actual waste level whenever the liquid is more dense than water, and yields a conservative waste volume when used in the volume calculation. Tank dimensions used to determine the difference between the elevation of the weight factor leg termination and the center of the dished bottom of tank are from Drawings H-2-38229 and H-2-40705.

Calibration Table: ECN-630520, *Incorporation of Catch Tank Specification Limits in SD-WM-TI-352, N1743*, page 10. The "14.01-in" level in the calibration table is equivalent to the "0-in" weight factor level. Therefore, to use the calibration table to determine waste volume in the tank, 14.01-in must be added to the weight factor level.

$$PCSACS\ Level\ Reading\ (Uncorrected\ Weight\ Factor) = 53.34 - in$$
$$Actual\ Waste\ Level\ using\ Uncorrected\ Weight\ Factor = 14.01 - in + 53.34 - in$$
$$Actual\ Waste\ Level\ using\ Uncorrected\ Weight\ Factor = 67.35 - in$$

67-in = 5177 gallons
68-in = 5273 gallons

$$Waste\ Level = 67.35 - in = 5177\ gallons + 0.35\ x\ (5273 - 5177\ gallons)$$
$$Waste\ Volume = 67.35 - in = 5211\ gallons$$
$$Waste\ Volume = 5211\ gallons/(1000\ gallons/kilogallon)$$
$$Waste\ Volume = 5.2\ kilogallons$$

244-A-TK Calibration Table

ECN 630220, pg #:0

~~43~~ 44

TANK(S) 244-A Catch Tank
Date of Calibration: Calculated

NOMINAL TANK CAPACITY: 18,800 Gal. DIMENSIONS: 14' O.D.
50%: 9,400 Gal. 80%: 15,040 Gal. 14' Btwn. Ends
REF. DWG. #: H-2-30229, H-2-40705 SHAPE/POSITION: Vert/Rnd Ends

LEVEL MEASUREMENT: ☐ Manual Tape ☐ FIC Transmitter Range:

in.	gal	in.	gal	in.	gal	in.	gal	in.	gal
1"	2	25"	1153	49"	3450	73"	5753	97"	8057
2"	8	26"	1244	50"	3546	74"	5849	98"	8153
3"	18	27"	1339	51"	3642	75"	5945	99"	8249
4"	31	28"	1435	52"	3738	76"	6041	100"	8345
5"	48	29"	1531	53"	3834	77"	6137	101"	8441
6"	70	30"	1627	54"	3930	78"	6233	102"	8537
7"	94	31"	1722	55"	4026	79"	6329	103"	8633
8"	123	32"	1818	56"	4122	80"	6425	104"	8728
9"	155	33"	1914	57"	4218	81"	6521	105"	8824
10"	191	34"	2010	58"	4314	82"	6617	106"	8920
11"	231	35"	2106	59"	4410	83"	6713	107"	9016
12"	274	36"	2202	60"	4506	84"	6809	108"	9112
13"	321	37"	2298	61"	4602	85"	6905	109"	9208
14"	371	38"	2394	62"	4698	86"	7001	110"	9304
15"	425	39"	2490	63"	4794	87"	7097	111"	9400
16"	483	40"	2586	64"	4890	88"	7193	112"	9496
17"	544	41"	2682	65"	4986	89"	7289	113"	9592
18"	608	42"	2778	66"	5082	90"	7385	114"	9688
19"	676	43"	2874	67"	5177	91"	7481	115"	9784
20"	747	44"	2970	68"	5273	92"	7577	116"	9880
21"	822	45"	3066	69"	5369	93"	7673	117"	9976
22"	900	46"	3162	70"	5465	94"	7769	118"	10072
23"	981	47"	3258	71"	5561	95"	7865	119"	10168
24"	1065	48"	3354	72"	5657	96"	7961	120+	+96/in

NOTE: Above 27", tank sides are straight at 96 gal/inch.

Tank 244-A SolidWorks™ Determination of Weight Factor Drop Leg Height above Tank Bottom and Waste Heel Volume

244-A-TK
June 16, 2014

PCSACS liquid level reported as weight factor (WF); weight factor instrument leg at location M terminates 1-in above the side of dished tank bottom (Drawings H-2-38217 and H-2-38229) and 14.01–in above tank bottom. When WF = 0-in, tank contains 14.01-in of waste, or 1.44 m^3, or 380.4 gallons, uncorrected for specific gravity. Uncorrected WF gives a conservative volume, and is reported here. In order to use the ECN-630520, *Incorporation of Catch Tank Specification Limits in SD-WM-TI-352, N1743*, page 10 calibration table, 14.01-in must be added to the weight factor reading.

Catch tank shown on Drawings H-2-38229 and H-2-40705.

Liquid Heel Calculation prepared using SolidWorks™ and Drawings H-2-38217, H-2-38229, and H-2-40705. Reference: Email, J. R. Gunter, *244-A Dimension Graphics*, dated June 16, 2014

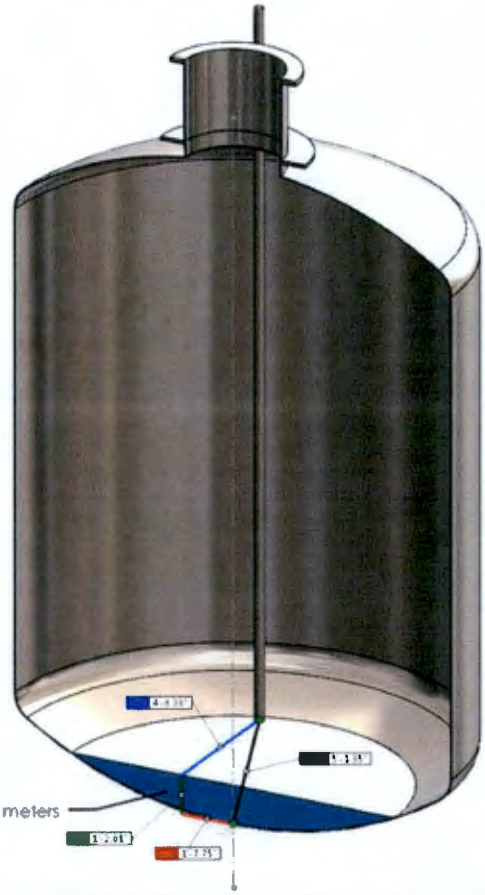

3.26 244-A-SUMP

PCSACS Level Reading = 0.0-in
PCSACS Level Reading Date = 2013-09-25

There is no calibration table for the 244-A sump. the sump is 20-in by 20-in by 20-in deep (Drawing H-2-38204 Sections 1 and 3). Each 1-in increase in waste level elevation between 0-in and 20-in corresponds to a 1.73 gallon increase.

$$Waste\ Volume/Vertical\ inch = (20 - in\ x\ 20 - in\ x\ 1 - in\ Deep)/(12\ inches/ft)^3\ x\ 7.48\ gallons/ft^3$$

$$Waste\ Volume/Vertical\ inch = 1.73\ gallons$$

The sump level is measured by weight factor/specific gravity instrumentation, with the weight factor leg terminated 1-inch above the sump floor (Drawing H-2-38217). Therefore when the measured weight factor, corrected for the specific gravity of the liquid in the sump, reads "0-in" the waste volume is ≤ 1.73 gallons; when the corrected weight factor reads "19-in", the sump is full, and contains 34.6 gallons. Assuming the sump contains only water with specific gravity = 1, then the corrected and uncorrected weight factors will be the same.

$$PCSACS\ Level\ Reading = 0.0 - in = < 1.73\ gallons$$
$$Waste\ Volume = 1.73\ gallons/(1000\ gallons/kilogallon)$$
$$Waste\ Volume = < 0.10\ kilogallons$$

3.27 244-AR VAULT / TK-244-AR-001

The TK-244-AR-001 transfer was completed June 12, 2003 leaving an estimated waste heel of 194 gallons (RPP-12051 Rev. 0, *244-AR Vault Stabilization Completion Report*, Section 3.1.1.) The last waste level reading reported in RPP-12051 Rev. 0 was 2.513-in on July 6, 2013 (Page A-125). The PCSACS level reading was 0-in on May 19, 2014.

$$Waste\ Volume = 194\ gallons$$
$$Waste\ Volume = 194\ gallons/(1000\ gallons/kilogallon)$$
$$Waste\ Volume = 0.19\ kilogallons$$

3.28 244-AR VAULT / SUMP-AR-001

Sump-AR-001 contained a waste heel of 2 gallons when stabilization was completed in 2003 (RPP-12051 Rev. 0, Section 3.2.1). The last waste level reading reported in RPP-12051 Rev. 0 was 0.143-in obtained on July 6, 2013 (Page A-125). The PCSACS level reading was 2.85-in on November 12, 2013.

$$Waste\ Volume = 2\ gallons$$
$$Waste\ Volume = 2\ gallons/(1000\ gallons/kilogallon)$$
$$Waste\ Volume = < 0.10\ kilogallons$$

3.29 244-AR VAULT / TK-244-AR-002

The TK-244-AR-002 transfer was completed April 30, 2003 leaving an estimated waste heel of 194 gallons (RPP-12051 Rev. 0, Section 3.1.2). The last waste level reading reported in RPP-12051 Rev. 0 was 0.071-in on July 6, 2013 (Page A-125). The PCSACS level reading was 0-in on May 19, 2014.

$$Waste\ Volume = 194\ gallons$$
$$Waste\ Volume = 194\ gallons/(1000\ gallons/kilogallon)$$
$$Waste\ Volume = 0.19\ kilogallons$$

3.30 244-AR VAULT / SUMP-AR-002

Sump-AR-002 contained a waste heel of 2 gallons after stabilization was completed in 2003 (RPP-12051 Rev. 0, Section 3.2.1). The last waste level reading reported in RPP-12051 Rev. 0 was 0.060-in on July 6, 2013 (Page A-125). The PCSACS level reading was 0-in on May 19, 2014.

$$Waste\ Volume = 2\ gallons$$
$$Waste\ Volume = 2\ gallons/(1000\ gallons/kilogallon)$$
$$Waste\ Volume = < 0.10\ kilogallons$$

3.31 244-AR VAULT / TK-244-AR-003

The TK-244-AR-003 transfer was completed April 30, 2003 leaving an estimated liquid waste heel of 46 gallons and an estimated sludge heel of < 50 gallons (RPP-12051 Rev. 0, Section 3.1.3). The last waste level reading reported in RPP-12051 Rev. 0 was 0.015-in on July 6, 2013 (Page A-125). The PCSACS level reading was 3.34-in on May 19, 2014.

A waste level reading of 7.00-in was obtained March 20, 2014. The waste level reading was 4.35-in on November 12, 2013. Future actions are documented in Problem Evaluation Request WRPS-PER-2014-0500.

$$Waste\ Volume = 46\ gallons + < 50\ gallons = < 96\ gallons$$
$$Waste\ Volume = < 96\ gallons/(1000\ gallons/kilogallon)$$
$$Waste\ Volume = < 0.10\ kilogallons$$

$$Solids\ Volume = < 50\ gallons$$
$$Liquid\ Volume = 46\ gallons$$

3.32 244-AR VAULT / SUMP-AR-003

The Sump-AR-003 transfer was completed June 2, 2003 leaving an estimated waste heel of 25 gallons when it was measured August 12, 2003 (RPP-12051 Rev. 0, Section 3.2.3).

A waste level reading of 22.5-in was obtained March 20, 2014 (Work package TFC-WO-14-1109). The waste level reading was 0-in on November 12, 2013. Future actions are documented in Problem Evaluation Request WRPS-PER-2014-0501.

$$Waste\ Volume = 25\ gallons$$
$$Waste\ Volume = 25\ gallons/(1000\ gallons/kilogallon)$$
$$Waste\ Volume = < 0.10\ kilogallons$$

3.33 244-AR VAULT / TK-244-AR-004

The TK-244-AR-004 transfer was completed April 30, 2003 leaving an estimated liquid waste heel of 46 gallons and an estimated sludge heel of < 50 gallons (RPP-12051 Rev. 0, Section 3.1.4). The last waste level reading reported in RPP-12051 Rev. 0 was 0.111-in on July 6, 2013 (Page A-125). The PCSACS level reading was 0-in on May 19, 2014.

$$Waste\ Volume = 46\ gallons + < 50\ gallons = < 96\ gallons$$
$$Waste\ Volume = < 96\ gallons/(1000\ gallons/kilogallon)$$
$$Waste\ Volume = < 0.10\ kilogallons$$

$$Solids\ Volume = < 50\ gallons$$
$$Liquid\ Volume = 46\ gallons$$

3.34 244-BX-TK

PCSACS Level Reading = 55-in
PCSACS Level Reading Date = 2014-02-18

Calibration Table: ECN-630520, Rev. 0, *Incorporation of Catch Tank Specification Limits in SD-WM-TI-352, N1743*, page 15

$$PCSACS\ Level\ Reading = 55 - in = 10893\ gallons$$
$$Waste\ Volume = 10893\ gallons/(1000\ gallons/kilogallon)$$
$$Waste\ Volume = 10.9\ kilogallons$$

244-BX-TK Calibration Table

ECN 630520, pg # 5

TANK(S) 244-BX, 244-TX
Date of Calibration: Calculated

NOMINAL TANK CAPACITY: 31,000 Gal. DIMENSIONS: 12' O.D.
50%: 15,500 Gal. 80%: 24,800 Gal. 35' Btwn. Ends
REF. DWG. #: SK-2-23356 SHAPE/POSITION: Horiz/Rnd. Ends

LEVEL MEASUREMENT: ☐ Manual Tape ☐ FIC Transmitter Range:

in.	gal	in.	gal	in.	gal	in.	gal	in.	gal
1"	30	25"	3605	49"	9312	73"	15774	97"	22205
2"	86	26"	3814	50"	9573	74"	16047	98"	22462
3"	157	27"	4027	51"	9834	75"	16320	99"	22717
4"	242	28"	4243	52"	10097	76"	16593	100"	22970
5"	337	29"	4461	53"	10361	77"	16865	101"	23222
6"	442	30"	4683	54"	10626	78"	17137	102"	23472
7"	556	31"	4907	55"	10893	79"	17409	103"	23721
8"	678	32"	5134	56"	11160	80"	17681	104"	23968
9"	807	33"	5363	57"	11427	81"	17952	105"	24212
10"	944	34"	5595	58"	11696	82"	18223	106"	24455
11"	1086	35"	5829	59"	11966	83"	18494	107"	24696
12"	1235	36"	6065	60"	12236	84"	18764	108"	24935
13"	1389	37"	6304	61"	12506	85"	19034	109"	25171
14"	1549	38"	6545	62"	12777	86"	19304	110"	25405
15"	1714	39"	6788	63"	13048	87"	19573	111"	25637
16"	1884	40"	7032	64"	13319	88"	19840	112"	25866
17"	2059	41"	7279	65"	13591	89"	20107	113"	26093
18"	2238	42"	7528	66"	13863	90"	20374	114"	26317
19"	2422	43"	7778	67"	14135	91"	20639	115"	26539
20"	2610	44"	8030	68"	14407	92"	20903	116"	26757
21"	2801	45"	8283	69"	14680	93"	21166	117"	26973
22"	2997	46"	8538	70"	14953	94"	21427	118"	27186
23"	3196	47"	8795	71"	15226	95"	21688	119"	27395
24"	3399	48"	9053	72"	15500	96"	21947	120"	27601

3.35 244-BX-SUMP

PCSACS Level Reading = 0.25-in
PCSACS Level Reading Date = 2014-02-18

Drawing H-2-73784 shows structural plans for the 244-BX, 244-TX, and 244-U receiver vaults including the sump. The drawing refers to Drawing H-2-73787 Detail 14 for more details. Drawing H-2-73787 is titled *Structural RCVR Vault 244-TX Liner Plate Details* but was obviously intended to cover all three receiver vaults. The sump cross-section area is shown as 24-in x 79-in x 5-in deep (Drawings H-2-73784 and H-2-73787).

There is no calibration table for this sump. Each 1-in increase in waste level elevation between 0-in and 5-in corresponds to an 8.20 gallon increase.

$$Waste\ Volume/Vertical\ inch = (24 - in\ x\ 79 - in\ x\ 1 - in\ Deep)/(12\ inches/ft)^3\ x\ 7.48\ gallons/ft^3$$
$$Waste\ Volume/Vertical\ inch = 8.21\ gallons/inch$$

$$PCSACS\ Level\ Reading = 0.25 - in = 0.25 - in\ x\ 8.21\ \ gallons/inch$$
$$Waste\ Volume = 2.05\ gallons$$
$$Waste\ Volume = 2.05\ gallons/(1000\ gallons/kilogallon)$$
$$Waste\ Volume = < 0.10\ kilogallons$$

244-BX Double-Contained Receiver Tank and Sump Basis for Waste Volume Estimate

244-BX Double-Contained Receiver Tank and Sump Basis for Waste Volume Estimate:

Cells N/A
Sump 244-BX
Tank TK-244-BX

Prepared: May 20, 2014
D. J. Washenfelder

References:

1. H-2-73784 Sheet 1 Rev. 2, *Structural RCVR Vault 244-BX, TX & U Plans*
2. H-2-73787 Sheet 1 Rev. 1, *Structural RCVR Vault 244-TX Liner Plate Details*
3. SK-2-23356 Sheet 1 Rev. 4, *Receiver Vessels Salt Well Systems*
4. ECN-630520, *Incorporation of Catch Tank Specification Limits in SD-WM-TI-352, N1743*, page 15

The 244-BX, 244-TX, and 244-U double-contained receiver tanks use identical vessel and vault designs and dimensions, including process cell floor slope and sump size, and process vessel internals. Equivalent drawings for the three vessels and vaults are shown below.

244-BX, 244-TX, and 244-U Vessel and Process Vault Design Equivalency			
Feature	244-BX DCRT	244-TX DCRT	244-U DCRT
Process Vault Design	H-2-73784 H-2-73787	H-2-73784 H-2-73787	H-2-73784 H-2-73787
Process Vault Sump	H-2-73784 H-2-73787[1]	H-2-73784 H-2-73787[1]	H-2-73784 H-2-73787[1]
Tank	SK-2-23356 H-2-73933	SK-2-23356 H-2-73933	SK-2-23356 H-2-73933

Table Notes and References:

1. Drawing H-2-73784 shows structural plans for the 244-BX, 244-TX, and 244-U receiver vaults including the sump. The sump cross-section area is shown as 2'-0" x 6'-7". The drawing refers to Drawing H-2-73787 Detail 14 for more details. Drawing H-2-73787 is titled *Structural RCVR Vault 244-TX Liner Plate Details* but was obviously intended to cover all three receiver vaults.

Calibration tables for 244-BX DCRT and 244-TX DCRT are published in ECN-630520, *Incorporation of Catch Tank Specification Limits in SD-WM-TI-352, N1743*, page 15.

244-BX Tank and Receiver Vault Waste Volumes:

Feature Identification	Liquid Data Date	Liquid Height (in)	Liquid Volume (gal)	Solids Data Date	Solids Height (in)	Solids Volume (gal)	Total Volume (gal)	Reference
TK-244-BX	02/18/2014	55.00	10,893				10,893	PCSACS
TK-244-BX Sump	02/18/2014	0.25	2				2	PCSACS
Table Notes and References: (1) Stabilization Evaluation Forms (attached)								

Calculations:

Tank 244-BX Receiver Vault Sump:

Sump Volume ft^2 *per inch liquid* = 6.58 *ft x* 2.00 *ft x* 0.083 *ft*
Sump Volume ft^2 *per inch liquid* = 1.0967 ft^2 *per inch* for 0-in - 7-in
Sump Volume gallons per inch liquid = 1.0967 ft^2 *per inch x* 7.48 *gallons per* ft^2
Sump Volume gallons per inch liquid = 8.204 *gallons per inch*

Sump Liquid Level = 0.25 *inch on February 18, 2014 (PCSACS)*
Sump Volume = 0.25 *inch x* 8.204 *gallons per inch*

Sump Volume = 2.05 *gallons*

Tank 244-BX Volume, from RPP-RPT-29878 Rev. 0, Table 18:

Tank Liquid Level = 55 *inch on February 18, 2014 (PCSACS)*

Tank Liquid Level = 10,893 *gallons*

2

3.36 244-BXR VAULT / TK-BXR-001

Stabilization Evaluation Form: 1985-02-21
Solids Level Reading = 37.00-in
Solids Level Reading Date = 1984-11
Waste Level ("Liquid Level") Reading = 37.00-in
Waste Level ("Liquid Level") Reading Date = 1984-11

The 244-BXR and 244-CR process vaults use identical cell and vessel designs and dimensions, including process cell floor slope and sump size, and process vessel internals. Calibration tables for 244-CR Vault process vessel and process cell volumes are published in RPP-CALC-24219 Rev. 0, *244-CR Vault Tank and Cell Volume Calculations*, Tables 1 – 5. Since the vault and process vessel designs are identical, RPP-CALC-24219 is used for estimating 244-BXR waste volumes here. Refer to the Design Equivalency discussion following the 244-BXR Vault / SUMP-BXR-011 section.

Calibration Table: RPP-CALC-24219 Rev. 0, *244-CR Vault Tank and Cell Volume Calculations*, Table 1

$$Waste\ Volume = 37.00 - in = 4136\ gallons$$
$$Waste\ Volume = 4136\ gallons/(1000\ gallons/kilogallon)$$
$$Waste\ Volume = 4.1\ kilogallons$$

$$Solids\ Volume = 37.00 - in = 4136\ gallons$$

$$Liquid\ Volume = Waste\ Volume - Solids\ Volume$$
$$Liquid\ Volume = 4136\ gallons - 4136\ gallons$$
$$Liquid\ Volume = 0\ gallons$$

244-BXR Vault / TK-BXR-001 Calibration Table

RPP-CALC-24219, Rev. 0 **Page** 18 **of** 25

Title: 244-CR Vault Tank and Cell Volume Calculations **Identifier:** P-06-18 **Rev:** 0

Originator: AB Carlson **Date:** 1/10/05

Checker: MM Durst **Date:** 1/10/05

Organizational Manager: MJ Sutey **Date:** 1/13/05

Table 1. Volume as a Function of Liquid Level for Tanks TK-CR-001 and TK-CR-011 (2 pages)

Ht. (in.)	Vol. (gal)	Ht. (in.)	Vol. (gal)	Ht. (in.)	Vol. (gal)	Ht. (in.)	Vol. (gal)	Ht. (in.)	Vol. (gal)	Ht. (in.)	Vol. (gal)	Ht. (in.)	Vol. (gal)	Ht. (in.)	Vol. (gal)
0	0	14.5	672	28.75	2590	43	5309	57.5	8148	72	10988	86.5	13828	101	16667
0.25	0.2	14.75	696	29	2634	43.25	5358	57.75	8197	72.25	11037	86.75	13877	101.25	16716
0.5	0.8	15	719	29.25	2678	43.5	5407	58	8246	72.5	11086	87	13926	101.5	16765
0.75	1.8	15.25	743	29.5	2723	43.75	5456	58.25	8295	72.75	11135	87.25	13975	101.75	16814
1	3.3	15.5	767	29.75	2768	44	5505	58.5	8344	73	11184	87.5	14024	102	16863
1.25	5.1	15.75	792	30	2813	44.25	5554	58.75	8393	73.25	11233	87.75	14073	102.25	16912
1.5	7.3	16	817	30.25	2858	44.5	5603	59	8442	73.5	11282	88	14122	102.5	16961
1.75	10	16.25	842	30.5	2904	44.75	5651	59.25	8491	73.75	11331	88.25	14170	102.75	17010
2	13	16.5	868	30.75	2949	45	5700	59.5	8540	74	11380	88.5	14219	103	17059
2.25	16	16.75	894	31	2995	45.25	5749	59.75	8589	74.25	11429	88.75	14268	103.25	17108
2.5	20	17	921	31.25	3041	45.5	5798	60	8638	74.5	11478	89	14317	103.5	17157
2.75	25	17.25	948	31.5	3088	45.75	5847	60.25	8687	74.75	11527	89.25	14366	103.75	17206
3	29	17.5	975	31.75	3134	46	5896	60.5	8736	75	11576	89.5	14415	104	17255
3.25	34	17.75	1003	32	3181	46.25	5945	60.75	8785	75.25	11625	89.75	14464	104.25	17304
3.5	40	18	1031	32.25	3227	46.5	5994	61	8834	75.5	11674	90	14513	104.5	17353
3.75	46	18.25	1060	32.5	3274	46.75	6043	61.25	8883	75.75	11722	90.25	14562	104.75	17402
4	52	18.5	1088	32.75	3321	47	6092	61.5	8932	76	11771	90.5	14611	105	17451
4.25	59	18.75	1118	33	3368	47.25	6141	61.75	8981	76.25	11820	90.75	14660	105.25	17500
4.5	66	19	1147	33.25	3415	47.5	6190	62	9030	76.5	11869	91	14709	105.5	17549
4.75	73	19.25	1177	33.5	3463	47.75	6239	62.25	9079	76.75	11918	91.25	14758	105.75	17598
5	81	19.5	1208	33.75	3510	48	6288	62.5	9128	77	11967	91.5	14807	106	17647
5.25	89	19.75	1238	34	3558	48.25	6337	62.75	9177	77.25	12016	91.75	14856	106.25	17696
5.5	98	20	1269	34.25	3606	48.5	6386	63	9226	77.5	12065	92	14905	106.5	17745
5.75	107	20.25	1301	34.5	3653	48.75	6435	63.25	9274	77.75	12114	92.25	14954	106.75	17794
6	117	20.5	1333	34.75	3701	49	6484	63.5	9323	78	12163	92.5	15003	107	17842
6.25	126	20.75	1365	35	3749	49.25	6533	63.75	9372	78.25	12212	92.75	15052	107.25	17891
6.5	137	21	1397	35.25	3797	49.5	6582	64	9421	78.5	12261	93	15101	107.5	17940
6.75	147	21.25	1430	35.5	3845	49.75	6631	64.25	9470	78.75	12310	93.25	15150	107.75	17989
7	158	21.5	1464	35.75	3894	50	6680	64.5	9519	79	12359	93.5	15199	108	18038
7.25	170	21.75	1497	36	3942	50.25	6729	64.75	9568	79.25	12408	93.75	15248	108.25	18087
7.5	182	22	1532	36.25	3990	50.5	6778	65	9617	79.5	12457	94	15297	108.5	18136
7.75	194	22.25	1566	36.5	4039	50.75	6826	65.25	9666	79.75	12506	94.25	15346	108.75	18185
8	207	22.5	1601	36.75	4087	51	6875	65.5	9715	80	12555	94.5	15394	109	18234
8.25	220	22.75	1636	37	4136	51.25	6924	65.75	9764	80.25	12604	94.75	15443	109.25	18283
8.5	233	23	1671	37.25	4184	51.5	6973	66	9813	80.5	12653	95	15492	109.5	18332
8.75	247	23.25	1707	37.5	4233	51.75	7022	66.25	9862	80.75	12702	95.25	15541	109.75	18381
9	261	23.5	1744	37.75	4282	52	7071	66.5	9911	81	12751	95.5	15590	110	18430
9.25	276	23.75	1780	38	4330	52.25	7120	66.75	9960	81.25	12800	95.75	15639	110.25	18479
9.5	291	24	1817	38.25	4379	52.5	7169	67	10009	81.5	12849	96	15688	110.5	18528
9.75	306	24.25	1855	38.5	4428	52.75	7218	67.25	10058	81.75	12898	96.25	15737	110.75	18577
10	322	24.5	1893	38.75	4477	53	7267	67.5	10107	82	12946	96.5	15786	111	18626
10.25	338	24.75	1931	39	4526	53.25	7316	67.75	10156	82.25	12995	96.75	15835	111.25	18675
10.5	355	25	1969	39.25	4574	53.5	7365	68	10205	82.5	13044	97	15884	111.5	18724
10.75	372	25.25	2008	39.5	4623	53.75	7414	68.25	10254	82.75	13093	97.25	15933	111.75	18773
11	389	25.5	2047	39.75	4672	54	7463	68.5	10303	83	13142	97.5	15982	112	18822
11.25	407	25.75	2087	40	4721	54.25	7512	68.75	10352	83.25	13191	97.75	16031	112.25	18871
11.5	425	26	2127	40.25	4770	54.5	7561	69	10401	83.5	13240	98	16080	112.5	18920
11.75	443	26.25	2167	40.5	4819	54.75	7610	69.25	10450	83.75	13289	98.25	16129	112.75	18969
12	462	26.5	2208	40.70*	4859	55	7659	69.5	10498	84	13338	98.5	16178	113	19018
12.25	481	26.75	2249	40.75	4868	55.25	7708	69.75	10547	84.25	13387	98.75	16227	113.25	19066
12.5	501	27	2290	41	4917	55.5	7757	70	10596	84.5	13436	99	16276	113.5	19115
12.75	521	27.25	2332	41.25	4966	55.75	7806	70.25	10645	84.75	13485	99.25	16325	113.75	19164
13	542	27.5	2374	41.5	5015	56	7855	70.5	10694	85	13534	99.5	16374	114	19213
13.25	562	27.75	2417	41.75	5064	56.25	7904	70.75	10743	85.25	13583	99.75	16423	114.25	19262
13.5	584	27.89*	2440	42	5113	56.5	7953	71	10792	85.5	13632	100	16472	114.5	19311
13.75	605	28	2459	42.25	5162	56.75	8002	71.25	10841	85.75	13681	100.25	16521	114.75	19360
14	627	28.25	2503	42.5	5211	57	8050	71.5	10890	86	13730	100.5	16570	115	19409
14.25	650	28.5	2546	42.75	5260	57.25	8099	71.75	10939	86.25	13779	100.75	16618	115.25	19458

Title: 244-CR Vault Tank and Cell Volume Calculations **Identifier:** P-06-18 Rev: 0

Originator: AB Carlson **Date:** 1/10/05

Checker: MM Durst **Date:** 1/10/05

Organizational Manager: MJ Sutey **Date:** 1/13/05

Table 1. Volume as a Function of Liquid Level for Tanks TK-CR-001 and TK-CR-011 (2 pages)

Ht. (in.)	Vol. (gal)	Ht. (in.)	Vol. (gal)	Ht. (in.)	Vol. (gal)	Ht. (in.)	Vol. (gal)	Ht. (in.)	Vol. (gal)	Ht. (in.)	Vol. (gal)	Ht. (in.)	Vol. (gal)	Ht. (in.)	Vol. (gal)
115.5	19507	128.75	22102	142	24697	155.25	27292	168.5	29887	181.75	32481	195	35076	208.25	37671
115.75	19556	129	22151	142.25	24746	155.5	27341	168.75	29936	182	32530	195.25	35125	208.5	37720
116	19605	129.25	22200	142.5	24795	155.75	27390	169	29985	182.25	32579	195.5	35174	208.75	37769
116.25	19654	129.5	22249	142.75	24844	156	27439	169.25	30033	182.5	32628	195.75	35223	209	37818
116.5	19703	129.75	22298	143	24893	156.25	27488	169.5	30082	182.75	32677	196	35272	209.25	37867
116.75	19752	130	22347	143.25	24942	156.5	27537	169.75	30131	183	32726	196.25	35321	209.5	37916
117	19801	130.25	22396	143.5	24991	156.75	27585	170	30180	183.25	32775	196.5	35370	209.75	37965
117.25	19850	130.5	22445	143.75	25040	157	27634	170.25	30229	183.5	32824	196.75	35419	210	38014
117.5	19899	130.75	22494	144	25089	157.25	27683	170.5	30278	183.75	32873	197	35468	210.25	38063
117.75	19948	131	22543	144.25	25137	157.5	27732	170.75	30327	184	32922	197.25	35517	210.5	38112
118	19997	131.25	22592	144.5	25186	157.75	27781	171	30376	184.25	32971	197.5	35566	210.75	38161
118.25	20046	131.5	22641	144.75	25235	158	27830	171.25	30425	184.5	33020	197.75	35615	211	38210
118.5	20095	131.75	22689	145	25284	158.25	27879	171.5	30474	184.75	33069	198	35664	211.25	38259
118.75	20144	132	22738	145.25	25333	158.5	27928	171.75	30523	185	33118	198.25	35713	211.5	38308
119	20193	132.25	22787	145.5	25382	158.75	27977	172	30572	185.25	33167	198.5	35762	211.75	38357
119.25	20242	132.5	22836	145.75	25431	159	28026	172.25	30621	185.5	33216	198.75	35811	212	38406
119.5	20290	132.75	22885	146	25480	159.25	28075	172.5	30670	185.75	33265	199	35860	212.25	38455
119.75	20339	133	22934	146.25	25529	159.5	28124	172.75	30719	186	33314	199.25	35909	212.5	38504
120	20388	133.25	22983	146.5	25578	159.75	28173	173	30768	186.25	33363	199.5	35958	212.75	38553
120.25	20437	133.5	23032	146.75	25627	160	28222	173.25	30817	186.5	33412	199.75	36007	213	38601
120.5	20486	133.75	23081	147	25676	160.25	28271	173.5	30866	186.75	33461	200	36056	213.25	38650
120.75	20535	134	23130	147.25	25725	160.5	28320	173.75	30915	187	33510	200.25	36105	213.5	38699
121	20584	134.25	23179	147.5	25774	160.75	28369	174	30964	187.25	33559	200.5	36153	213.75	38748
121.25	20633	134.5	23228	147.75	25823	161	28418	174.25	31013	187.5	33608	200.75	36202	214	38797
121.5	20682	134.75	23277	148	25872	161.25	28467	174.5	31062	187.75	33657	201	36251	214.25	38846
121.75	20731	135	23326	148.25	25921	161.5	28516	174.75	31111	188	33705	201.25	36300	214.5	38895
122	20780	135.25	23375	148.5	25970	161.75	28565	175	31160	188.25	33754	201.5	36349	214.75	38944
122.25	20829	135.5	23424	148.75	26019	162	28614	175.25	31209	188.5	33803	201.75	36398	215	38993
122.5	20878	135.75	23473	149	26068	162.25	28663	175.5	31257	188.75	33852	202	36447	215.25	39042
122.75	20927	136	23522	149.25	26117	162.5	28712	175.75	31306	189	33901	202.25	36496	215.5	39091
123	20976	136.25	23571	149.5	26166	162.75	28761	176	31355	189.25	33950	202.5	36545	215.75	39140
123.25	21025	136.5	23620	149.75	26215	163	28809	176.25	31404	189.5	33999	202.75	36594	216	39189
123.5	21074	136.75	23669	150	26264	163.25	28858	176.5	31453	189.75	34048	203	36643	216.25	39238
123.75	21123	137	23718	150.25	26313	163.5	28907	176.75	31502	190	34097	203.25	36692	216.5	39287
124	21172	137.25	23767	150.5	26361	163.75	28956	177	31551	190.25	34146	203.5	36741	216.75	39336
124.25	21221	137.5	23816	150.75	26410	164	29005	177.25	31600	190.5	34195	203.75	36790	217	39385
124.5	21270	137.75	23865	151	26459	164.25	29054	177.5	31649	190.75	34244	204	36839	217.25	39434
124.75	21319	138	23913	151.25	26508	164.5	29103	177.75	31698	191	34293	204.25	36888	217.5	39483
125	21368	138.25	23962	151.5	26557	164.75	29152	178	31747	191.25	34342	204.5	36937	217.75	39532
125.25	21417	138.5	24011	151.75	26606	165	29201	178.25	31796	191.5	34391	204.75	36986	218	39581
125.5	21466	138.75	24060	152	26655	165.25	29250	178.5	31845	191.75	34440	205	37035	218.25	39630
125.75	21514	139	24109	152.25	26704	165.5	29299	178.75	31894	192	34489	205.25	37084	218.5	39679
126	21563	139.25	24158	152.5	26753	165.75	29348	179	31943	192.25	34538	205.5	37133	218.75	39728
126.25	21612	139.5	24207	152.75	26802	166	29397	179.25	31992	192.5	34587	205.75	37182	219	39776
126.5	21661	139.75	24256	153	26851	166.25	29446	179.5	32041	192.75	34636	206	37231	219.25	39825
126.75	21710	140	24305	153.25	26900	166.5	29495	179.75	32090	193	34685	206.25	37280	219.5	39874
127	21759	140.25	24354	153.5	26949	166.75	29544	180	32139	193.25	34734	206.5	37329	219.75	39923
127.25	21808	140.5	24403	153.75	26998	167	29593	180.25	32188	193.5	34783	206.75	37377	220	39972
127.5	21857	140.75	24452	154	27047	167.25	29642	180.5	32237	193.75	34832	207	37426	220.25	40021
127.75	21906	141	24501	154.25	27096	167.5	29691	180.75	32286	194	34881	207.25	37475	220.5	40070
128	21955	141.25	24550	154.5	27145	167.75	29740	181	32335	194.25	34929	207.5	37524	220.70^	40110
128.25	22004	141.5	24599	154.75	27194	168	29789	181.25	32384	194.5	34978	207.75	37573		
128.5	22053	141.75	24648	155	27243	168.25	29838	181.5	32433	194.75	35027	208	37622		

Footnotes:

* Transition from flange dish to knuckle dish

\# Transition from knuckle dish to straight section of tank

^ Maximum fill height of tank

3.37 244-BXR VAULT / SUMP-BXR-001

Stabilization Evaluation Form: 1985-02-21
Solids Level Reading = 0-in
Solids Level Reading Date = 1984-04
Waste Level ("Liquid Level") Reading = 4.00-in
Waste Level ("Liquid Level") Reading Date = 1984-04

The 244-BXR and 244-CR process vaults use identical cell and vessel designs and dimensions, including process cell floor slope and sump size, and process vessel internals. Calibration tables for 244-CR Vault process vessel and process cell volumes are published in RPP-CALC-24219 Rev. 0, *244-CR Vault Tank and Cell Volume Calculations*, Tables 1 – 5. Since the vault and process vessel designs are identical, RPP-CALC-24219 is used for estimating 244-BXR waste volumes. Refer to the Design Equivalency discussion following the 244-BXR Vault / SUMP-BXR-011 section.

Calibration Table: RPP-CALC-24219 Rev. 0, *244-CR Vault Tank and Cell Volume Calculations*, Table 3

$$Waste\ Volume = 4.00 - in = 15\ gallons$$
$$Waste\ Volume = 15\ gallons/(1000\ gallons/kilogallon)$$
$$Waste\ Volume =< 0.10\ kilogallons$$

$$Solids\ Volume = 1 - in = 0\ gallons$$

$$Liquid\ Volume = Waste\ Volume - Solids\ Volume$$
$$Liquid\ Volume = 15\ gallons\ - 0\ gallons$$
$$Liquid\ Volume = 15\ gallons$$

244-BXR Vault / SUMP-BXR-001 Calibration Table

RPP-CALC-24219, Rev. 0 **Page** 22 **of** 25

Title: 244-CR Vault Tank and Cell Volume Calculations **Identifier:** P-06-18 Rev: 0

Originator: AB Carlson **Date:** 1/10/05

Checker: MM Durst **Date:** 1/10/05

Organizational Manager: MJ Sutey **Date:** 1/13/05

Table 3. Volume as a Function of Liquid Level for Cell CR-001
(As Measured from the Bottom of the Sump)

Ht. (in.)	Vol. (gal)	Ht. (in.)	Vol. (gal)	Ht. (in.)	Vol. (gal)	Ht. (in.)	Vol. (gal)	Ht. (in.)	Vol. (gal)	Ht. (in.)	Vol. (gal)
0	0	11.25	42	22.25	3138	33.5	6693	44.75	9462	56	11529
0.25	0.9	11.5	43	22.5	3226	33.75	6763	45	9515	56.25	11570
0.5	1.9	11.75	44	22.75	3313	34	6833	45.25	9568	56.5	11611
0.75	2.8	12*	45	23	3400	34.25	6902	45.5	9620	56.75	11652
1	3.7	12.25	47	23.25	3487	34.5	6971	45.75	9672	57	11693
1.25	4.7	12.5	52	23.5	3573	34.75	7039	46	9723	57.25	11734
1.5	5.6	12.75	62	23.75	3659	35	7107	46.25	9774	57.5	11775
1.75	6.5	13	77	24	3744	35.25	7175	46.5	9825	57.75	11816
2	7.5	13.25	100	24.25	3829	35.5	7242	46.75	9875	58	11856
2.25	8.4	13.5	132	24.5	3914	35.75	7309	47	9925	58.25	11897
2.5	9.4	13.75	174	24.75	3998	36	7375	47.25	9975	58.5	11937
2.75	10	14	228	25	4081	36.25	7441	47.5	10024	58.75	11978
3	11	14.25	294	25.25	4165	36.5	7507	47.75	10073	59	12018
3.25	12	14.5#	376	25.5	4248	36.75	7572	48	10121	59.25	12059
3.5	13	14.75	465	25.75	4330	37	7637	48.25	10170	59.5	12099
3.75	14	15	554	26	4413	37.25	7702	48.5	10217	59.75	12139
4	15	15.25	643	26.25	4494	37.5	7766	48.75	10265	60	12179
4.25	16	15.5	732	26.5	4576	37.75	7830	49	10312	60.25	12220
4.5	17	15.75	822	26.75	4657	38	7893	49.25	10359	60.5	12260
4.75	18	16	911	27	4737	38.25	7956	49.5	10405	60.75	12300
5	19	16.25	1000	27.25	4817	38.5	8019	49.75	10451	61	12340
5.25	20	16.5	1089	27.5	4897	38.75	8081	50	10497	61.25	12380
5.5	21	16.75	1178	27.75	4977	39	8143	50.25	10542	61.5	12420
5.75	22	17	1267	28	5056	39.25	8204	50.5	10587	61.75	12460
6	22	17.25	1356	28.25	5134	39.5	8265	50.75	10632	62	12500
6.25	23	17.5	1446	28.5	5212	39.75	8326	51	10676	62.25	12541
6.5	24	17.75	1535	28.75	5290	40	8387	51.25	10721	62.5**	12581
6.75	25	18	1624	29	5367	40.25	8446	51.5	10765	62.75	12621
7	26	18.25	1713	29.25	5444	40.5	8506	51.75	10809	63	12661
7.25	27	18.5	1802	29.5	5521	40.75	8565	52	10852	63.25	12701
7.5	28	18.75	1891	29.75	5597	41	8624	52.25	10896	63.5	12741
7.75	29	19	1980	30	5673	41.25	8683	52.5	10939	63.75	12781
8	30	19.25	2070	30.25	5748	41.5	8741	52.75	10982	64	12821
8.25	31	19.5	2159	30.5	5823	41.75	8799	53	11025	64.25	12861
8.5	32	19.75	2248	30.75	5898	42	8856	53.25	11068	64.5	12901
8.75	33	20	2337	31	5972	42.25	8913	53.5	11110	64.75	12941
9	34	20.25	2426	31.25	6046	42.5	8970	53.75	11153	65	12981
9.25	35	20.5	2515	31.5	6120	42.75	9026	54	11195	65.25	13021
9.5	36	20.75	2604	31.75	6193	43	9082	54.25	11237	65.5	13061
9.75	36	21	2694	32	6265	43.25	9137	54.5	11279	65.75	13101
10	37	21.25	2783	32.25	6338	43.5	9192	54.75	11321	66	13141
10.25	38	21.5	2872	32.5	6409	43.75	9247	55	11363		
10.5	39	21.57^	2896	32.75	6481	44	9301	55.25	11404		
10.75	40	21.75	2961	33	6552	44.25	9355	55.5	11446		
11	41	22	3049	33.25	6623	44.5	9409	55.75	11487		

Footnotes:

* Top of Sump/Low Point of Floor

\# High Point of Floor

^ Bottom of tank TK-CR-001

** Transition between tank dished head and straight side of tank

3.39 244-BXR VAULT / TK-BXR-002

Stabilization Evaluation Form: 1985-02-21
Solids Level Reading = 19.00-in
Solids Level Reading Date = 1984-04
Waste Level ("Liquid Level") Reading = 23.00-in
Waste Level ("Liquid Level") Reading Date = 1985-02-20

The 244-BXR and 244-CR process vaults use identical cell and vessel designs and dimensions, including process cell floor slope and sump size, and process vessel internals. Calibration tables for 244-CR Vault process vessel and process cell volumes are published in RPP-CALC-24219 Rev. 0, *244-CR Vault Tank and Cell Volume Calculations*, Tables 1 – 5. Since the vault and process vessel designs are identical, RPP-CALC-24219 is used for estimating 244-BXR waste volumes. Refer to the Design Equivalency discussion following the 244-BXR Vault / SUMP-BXR-011 section.

Calibration Table: RPP-CALC-24219 Rev. 0, *244-CR Vault Tank and Cell Volume Calculations*, Table 2

$$Waste\ Volume = 23.00 - in = 1132\ gallons$$
$$Waste\ Volume = 1132\ gallons/(1000\ gallons/kilogallon)$$
$$Waste\ Volume = 1.1\ kilogallons$$

$$Solids\ Volume = 19.00 - in = 792\ gallons$$

$$Liquid\ Volume = Waste\ Volume - Solids\ Volume$$
$$Liquid\ Volume = 1132\ gallons - 792\ gallons$$
$$Liquid\ Volume = 340\ gallons$$

244-BXR Vault / TK-BXR-002 Calibration Table

RPP-CALC-24219, Rev. 0 Page 20 of 25

Title: 244-CR Vault Tank and Cell Volume Calculations **Identifier:** P-06-18 Rev: 0

Originator: AB Carlson **Date:** 1/10/05

Checker: MM Durst **Date:** 1/10/05

Organizational Manager: MJ Sutey **Date:** 1/12/05

Table 2. Volume as a Function of Liquid Level for Tanks TK-CR-002 and TK-CR-003 (2 pages)

Ht. (in.)	Vol. (gal)	Ht. (in.)	Vol. (gal)	Ht. (in.)	Vol. (gal)	Ht. (in.)	Vol. (gal)	Ht. (in.)	Vol. (gal)	Ht. (in.)	Vol. (gal)
0	0	10.5	247	20.5	915	30.75	1845	41.25	2819	51.75	3794
0.25	0.1	10.75	258	20.75	936	31	1868	41.5	2843	52	3817
0.5	0.6	11	270	21	957	31.25	1891	41.75	2866	52.25	3840
0.75	1.3	11.25	283	21.25	979	31.5	1914	42	2889	52.5	3863
1	2.3	11.5	295	21.5	1000	31.75	1938	42.25	2912	52.75	3887
1.25	3.6	11.75	308	21.75	1022	32	1961	42.5	2935	53	3910
1.5	5.1	12	321	22	1044	32.25	1984	42.75	2959	53.25	3933
1.75	7.0	12.25	335	22.25	1066	32.5	2007	43	2982	53.5	3956
2	9.1	12.5	348	22.5	1088	32.75	2030	43.25	3005	53.75	3979
2.25	12	12.75	362	22.75	1110	33	2054	43.5	3028	54	4003
2.5	14	13	376	23	1132	33.25	2077	43.75	3051	54.25	4026
2.75	17	13.25	391	23.25	1154	33.5	2100	44	3075	54.5	4049
3	20	13.5	405	23.5	1177	33.75	2123	44.25	3098	54.75	4072
3.25	24	13.75	420	23.75	1199	34	2146	44.5	3121	55	4096
3.5	28	14	435	24	1222	34.25	2170	44.75	3144	55.25	4119
3.75	32	14.25	451	24.25	1244	34.5	2193	45	3167	55.5	4142
4	36	14.5	467	24.5	1267	34.75	2216	45.25	3191	55.75	4165
4.25	41	14.75	483	24.75	1290	35	2239	45.5	3214	56	4188
4.5	46	15	499	25	1313	35.25	2262	45.75	3237	56.25	4212
4.75	51	15.25	515	25.25	1336	35.5	2286	46	3260	56.5	4235
5	57	15.5	532	25.5	1359	35.75	2309	46.25	3283	56.75	4258
5.25	62	15.75	549	25.75	1382	36	2332	46.5	3307	57	4281
5.5	68	16	566	26	1405	36.25	2355	46.75	3330	57.25	4304
5.75	75	16.25	584	26.25	1428	36.5	2378	47	3353	57.5	4328
6	81	16.5	602	26.5	1451	36.75	2402	47.25	3376	57.75	4351
6.25	88	16.75	620	26.75	1474	37	2425	47.5	3399	58	4374
6.5	95	17	638	27	1497	37.25	2448	47.75	3423	58.25	4397
6.75	103	17.25	657	27.25	1520	37.5	2471	48	3446	58.5	4420
7	110	17.5	675	27.5	1543	37.75	2495	48.25	3469	58.75	4444
7.25	118	17.75	695	27.75	1566	38	2518	48.5	3492	59	4467
7.5	127	18	714	28	1590	38.25	2541	48.75	3515	59.25	4490
7.75	135	18.25	733	28.25	1613	38.5	2564	49	3539	59.5	4513
8	144	18.5	753	**28.48^**	1634	38.75	2587	49.25	3562	59.75	4536
8.25	153	**18.53***	755	28.5	1636	39	2611	49.5	3585	60	4560
8.5	162	18.75	773	28.75	1659	39.25	2634	49.75	3608	60.25	4583
8.75	172	19	792	29	1682	39.5	2657	50	3631	60.5	4606
9	182	19.25	812	29.25	1706	39.75	2680	50.25	3655	60.75	4629
9.25	192	19.5	832	29.5	1729	40	2703	50.5	3678	61	4652
9.5	202	**19.53#**	834	29.75	1752	40.25	2727	50.75	3701	61.25	4676
9.75	213	19.75	852	30	1775	40.5	2750	51	3724	61.5	4699
10	224	20	873	30.25	1798	40.75	2773	51.25	3747	61.75	4722
10.25	235	20.25	894	30.5	1822	41	2796	51.5	3771	62	4745

Table 2. Volume as a Function of Liquid Level for Tanks TK-CR-002 and TK-CR-003 (2 pages)

Ht. (in.)	Vol. (gal)	Ht. (in.)	Vol. (gal)	Ht. (in.)	Vol. (gal)	Ht. (in.)	Vol. (gal)	Ht. (in.)	Vol. (gal)	Ht. (in.)	Vol. (gal)
62.25	4768	71.5	5633	81	6545	90.5	7457	100	8368	109.5	9280
62.5	4792	71.75	5657	81.25	6569	90.75	7481	100.25	8392	109.75	9304
62.75	4815	72	5681	81.5	6593	91	7505	100.5	8416	110	9328
63	4838	72.25	5705	81.75	6617	91.25	7528	100.75	8440	110.25	9352
63.25	4861	72.5	5729	82	6641	91.5	7552	101	8464	110.5	9376
63.5	4884	72.75	5753	82.25	6665	91.75	7576	101.25	8488	110.75	9400
63.75	4908	73	5777	82.5	6689	92	7600	101.5	8512	111	9424
64	4931	73.25	5801	82.75	6713	92.25	7624	101.75	8536	111.25	9448
64.25	4954	73.5	5825	83	6737	92.5	7648	102	8560	111.5	9472
64.5	4977	73.75	5849	83.25	6761	92.75	7672	102.25	8584	111.75	9496
64.75	5000	74	5873	83.5	6785	93	7696	102.5	8608	112	9520
65	5024	74.25	5897	83.75	6809	93.25	7720	102.75	8632	112.25	9544
65.25	5047	74.5	5921	84	6833	93.5	7744	103	8656	112.5	9568
65.5	5070	74.75	5945	84.25	6857	93.75	7768	103.25	8680	112.75	9592
65.75	5093	75	5969	84.5	6881	94	7792	103.5	8704	113	9616
66	5116	75.25	5993	84.75	6905	94.25	7816	103.75	8728	113.25	9640
66.25	5140	75.5	6017	85	6929	94.5	7840	104	8752	113.5	9664
66.5	5163	75.75	6041	85.25	6953	94.75	7864	104.25	8776	113.75	9688
66.75	5186	76	6065	85.5	6977	95	7888	104.5	8800	114	9712
67	5209	76.25	6089	85.75	7001	95.25	7912	104.75	8824	114.25	9736
67.25	5232	76.5	6113	86	7025	95.5	7936	105	8848	114.5	9760
67.5	5256	76.75	6137	86.25	7049	95.75	7960	105.25	8872	114.75	9784
67.75	5279	77	6161	86.5	7073	96	7984	105.5	8896	115	9808
68	5302	77.25	6185	86.75	7097	96.25	8008	105.75	8920	115.25	9832
68.25	5325	77.5	6209	87	7121	96.5	8032	106	8944	115.5	9856
68.5	5348	77.75	6233	87.25	7145	96.75	8056	106.25	8968	115.75	9880
68.75	5372	78	6257	87.5	7169	97	8080	106.5	8992	116	9904
69	5395	78.25	6281	87.75	7193	97.25	8104	106.75	9016	116.25	9928
69.25	5418	78.5	6305	88	7217	97.5	8128	107	9040	116.5	9952
69.48**	5439	78.75	6329	88.25	7241	97.75	8152	107.25	9064	116.75	9976
69.5	5441	79	6353	88.5	7265	98	8176	107.5	9088	117	10000
69.75	5465	79.25	6377	88.75	7289	98.25	8200	107.75	9112	117.25	10023
70	5489	79.5	6401	89	7313	98.5	8224	108	9136	117.5	10047
70.25	5513	79.75	6425	89.25	7337	98.75	8248	108.25	9160	117.75	10071
70.5	5537	80	6449	89.5	7361	99	8272	108.5	9184	118	10095
70.75	5561	80.25	6473	89.75	7385	99.25	8296	108.75	9208	118.25	10119
71	5585	80.5	6497	90	7409	99.5	8320	109	9232	**118.48@**	10141
71.25	5609	80.75	6521	90.25	7433	99.75	8344	109.25	9256		

Footnotes:

* Bottom of coil

\# Transition from flange dish to knuckle dish

^ Transition from knuckle dish to straight section of tank

** Top of coil

@ Maximum fill height of tank

3.40 244-BXR VAULT / SUMP-BXR-002

Stabilization Evaluation Form: 1985-02-21
Solids Level Reading = 11.00-in
Solids Level Reading Date = 1985-02
Waste Level ("Liquid Level") Reading = 13.00-in
Waste Level ("Liquid Level") Reading Date = 1985-02

The 244-BXR and 244-CR process vaults use identical cell and vessel designs and dimensions, including process cell floor slope and sump size, and process vessel internals. Calibration tables for 244-CR Vault process vessel and process cell volumes are published in RPP-CALC-24219 Rev. 0, *244-CR Vault Tank and Cell Volume Calculations*, Tables 1 – 5. Since the vault and process vessel designs are identical, RPP-CALC-24219 is used for estimating 244-BXR waste volumes. Refer to the Design Equivalency discussion following the 244-BXR Vault / SUMP-BXR-011 section.

Calibration Table: RPP-CALC-24219 Rev. 0, *244-CR Vault Tank and Cell Volume Calculations*, Table 4

$$Waste\ Volume = 13.00 - in = 78\ gallons$$
$$Waste\ Volume = 78\ gallons/(1000\ gallons/kilogallon)$$
$$Waste\ Volume =< 0.10\ kilogallons$$

$$Solids\ Volume = 11 - in = 41\ gallons$$

$$Liquid\ Volume = Waste\ Volume - Solids\ Volume$$
$$Liquid\ Volume = 78\ gallons\ - 41\ gallons$$
$$Liquid\ Volume = 37\ gallons$$

244-BXR Vault / SUMP-BXR-002 Calibration Table

RPP-CALC-24219, Rev. 0 Page 23 of 25

Title: 244-CR Vault Tank and Cell Volume Calculations **Identifier:** P-06-18 Rev: 0

Originator: AB Carlson **Date:** 1/10/05

Checker: MM Durst **Date:** 1/10/05

Organizational Manager: MJ Sutey **Date:** 1/12/05

Table 4. Volume as a Function of Liquid Level for Cells CR-002 and CR-003 (As Measured from the Bottom of the Sump)

Ht. (in.)	Vol. (gal)	Ht. (in.)	Vol. (gal)	Ht. (in.)	Vol. (gal)	Ht. (in.)	Vol. (gal)	Ht. (in.)	Vol. (gal)	Ht. (in.)	Vol. (gal)
0	0	11.25	42	22.5	1925	33.5	3879	44.75	5343	56	6518
0.25	0.9	11.5	43	22.75	1975	33.75	3917	45	5370	56.25	6544
0.5	1.9	11.75	44	23	2025	34	3955	45.25	5397	56.5	6570
0.75	2.8	12*	45	23.14^	2052	34.25	3992	45.5	5424	56.75	6596
1	3.7	12.25	47	23.25	2074	34.5	4030	45.75	5451	57	6622
1.25	4.7	12.5	52	23.5	2124	34.75	4067	46	5478	57.25	6647
1.5	5.6	12.75	62	23.75	2173	35	4104	46.25	5505	57.5	6673
1.75	6.5	13	78	24	2222	35.25	4141	46.5	5531	57.75	6699
2	7.5	13.25	102	24.25	2271	35.5	4177	46.75	5558	58	6725
2.25	8.4	13.5	135	24.5	2320	35.75	4213	47	5584	58.25	6751
2.5	9.4	13.75#	179	24.75	2368	36	4249	47.25	5611	58.5	6777
2.75	10	14	229	25	2416	36.25	4285	47.5	5637	58.75	6802
3	11	14.25	279	25.25	2463	36.5	4320	47.75	5664	59	6828
3.25	12	14.5	329	25.5	2511	36.75	4355	48	5690	59.25	6854
3.5	13	14.75	379	25.75	2558	37	4390	48.25	5716	59.5	6880
3.75	14	15	429	26	2604	37.25	4424	48.5	5742	59.75	6906
4	15	15.25	479	26.25	2651	37.5	4459	48.75	5768	60	6932
4.25	16	15.5	529	26.5	2697	37.75	4493	49	5794	60.25	6957
4.5	17	15.75	578	26.75	2743	38	4526	49.25	5820	60.5	6983
4.75	18	16	628	27	2789	38.25	4560	49.5	5846	60.75	7009
5	19	16.25	678	27.25	2834	38.5	4593	49.75	5872	61	7035
5.25	20	16.5	728	27.5	2879	38.75	4626	50	5898	61.25	7061
5.5	21	16.75	778	27.75	2924	39	4659	50.25	5924	61.5	7087
5.75	22	17	828	28	2968	39.25	4691	50.5	5950	61.75	7112
6	22	17.25	878	28.25	3013	39.5	4723	50.75	5976	62	7138
6.25	23	17.5	927	28.5	3057	39.75	4755	51	6002	62.25	7164
6.5	24	17.75	977	28.75	3100	40	4787	51.25	6028	62.5	7190
6.75	25	18	1027	29	3144	40.25	4818	51.5	6053	62.75	7216
7	26	18.25	1077	29.25	3187	40.5	4850	51.75**	6079	63	7241
7.25	27	18.5	1127	29.5	3230	40.75	4881	52	6105	63.25	7267
7.5	28	18.75	1177	29.75	3272	41	4911	52.25	6131	63.5	7293
7.75	29	19	1227	30	3315	41.25	4942	52.5	6157	63.75	7319
8	30	19.25	1277	30.25	3357	41.5	4972	52.75	6183	64	7345
8.25	31	19.5	1326	30.5	3399	41.75	5002	53	6208	64.25	7371
8.5	32	19.75	1376	30.75	3440	42	5031	53.25	6234	64.5	7396
8.75	33	20	1426	31	3481	42.25	5061	53.5	6260	64.75	7422
9	34	20.25	1476	31.25	3522	42.5	5090	53.75	6286	65	7448
9.25	35	20.5	1526	31.5	3563	42.75	5119	54	6312	65.25	7474
9.5	36	20.75	1576	31.75	3603	43	5147	54.25	6338	65.5	7500
9.75	36	21	1626	32	3643	43.25	5176	54.5	6363	65.75	7526
10	37	21.25	1676	32.25	3683	43.5	5204	54.75	6389	66	7551
10.25	38	21.5	1725	32.5	3723	43.75	5232	55	6415		
10.5	39	21.75	1775	32.75	3762	44	5260	55.25	6441		
10.75	40	22	1825	33	3801	44.25	5288	55.5	6467		
11	41	22.25	1875	33.25	3840	44.5	5315	55.75	6492		

Footnotes:

- * Top of Sump/Low Point of Floor
- \# High Point of Floor
- ^ Bottom of tank TK-CR-002 or TK-CR-003
- ** Transition between tank dished head and straight side of tank

3.41 244-BXR VAULT / TK-BXR-003

Stabilization Evaluation Form: 1985-02-21
Solids Level Reading = 15.25-in
Solids Level Reading Date = 1984-04
Waste Level ("Liquid Level") Reading = 19.00-in
Waste Level ("Liquid Level") Reading Date = 1985-02-18

The 244-BXR and 244-CR process vaults use identical cell and vessel designs and dimensions, including process cell floor slope and sump size, and process vessel internals. Calibration tables for 244-CR Vault process vessel and process cell volumes are published in RPP-CALC-24219 Rev. 0, *244-CR Vault Tank and Cell Volume Calculations*, Tables 1 – 5. Since the vault and process vessel designs are identical, RPP-CALC-24219 is used for estimating 244-BXR waste volumes. Refer to the Design Equivalency discussion following the 244-BXR Vault / SUMP-BXR-011 section.

Calibration Table: RPP-CALC-24219 Rev. 0, *244-CR Vault Tank and Cell Volume Calculations*, Table 2

$$Waste\ Volume = 19.00 - in = 792\ gallons$$
$$Waste\ Volume = 792\ gallons/(1000\ gallons/kilogallon)$$
$$Waste\ Volume = 0.79\ kilogallons$$

$$Solids\ Volume = 15.25 - in = 515\ gallons$$

$$Liquid\ Volume = Waste\ Volume - Solids\ Volume$$
$$Liquid\ Volume = 792\ gallons\ - 515\ gallons$$
$$Liquid\ Volume = 277\ gallons$$

244-BXR Vault / TK-BXR-003 Calibration Table

RPP-CALC-24219, Rev. 0 Page 20 of 25

Title: 244-CR Vault Tank and Cell Volume Calculations **Identifier:** P-06-18 **Rev:** 0

Originator: AB Carlson **Date:** 1/10/05

Checker: MM Durst **Date:** 1/10/05

Organizational Manager: MJ Sutey **Date:** 1/13/05

Table 2. Volume as a Function of Liquid Level for Tanks TK-CR-002 and TK-CR-003 (2 pages)

Ht. (in.)	Vol. (gal)	Ht. (in.)	Vol. (gal)	Ht. (in.)	Vol. (gal)	Ht. (in.)	Vol. (gal)	Ht. (in.)	Vol. (gal)	Ht. (in.)	Vol. (gal)
0	0	10.5	247	20.5	915	30.75	1845	41.25	2819	51.75	3794
0.25	0.1	10.75	258	20.75	936	31	1868	41.5	2843	52	3817
0.5	0.6	11	270	21	957	31.25	1891	41.75	2866	52.25	3840
0.75	1.3	11.25	283	21.25	979	31.5	1914	42	2889	52.5	3863
1	2.3	11.5	295	21.5	1000	31.75	1938	42.25	2912	52.75	3887
1.25	3.6	11.75	308	21.75	1022	32	1961	42.5	2935	53	3910
1.5	5.1	12	321	22	1044	32.25	1984	42.75	2959	53.25	3933
1.75	7.0	12.25	335	22.25	1066	32.5	2007	43	2982	53.5	3956
2	9.1	12.5	348	22.5	1088	32.75	2030	43.25	3005	53.75	3979
2.25	12	12.75	362	22.75	1110	33	2054	43.5	3028	54	4003
2.5	14	13	376	23	1132	33.25	2077	43.75	3051	54.25	4026
2.75	17	13.25	391	23.25	1154	33.5	2100	44	3075	54.5	4049
3	20	13.5	405	23.5	1177	33.75	2123	44.25	3098	54.75	4072
3.25	24	13.75	420	23.75	1199	34	2146	44.5	3121	55	4096
3.5	28	14	435	24	1222	34.25	2170	44.75	3144	55.25	4119
3.75	32	14.25	451	24.25	1244	34.5	2193	45	3167	55.5	4142
4	36	14.5	467	24.5	1267	34.75	2216	45.25	3191	55.75	4165
4.25	41	14.75	483	24.75	1290	35	2239	45.5	3214	56	4188
4.5	46	15	499	25	1313	35.25	2262	45.75	3237	56.25	4212
4.75	51	15.25	515	25.25	1336	35.5	2286	46	3260	56.5	4235
5	57	15.5	532	25.5	1359	35.75	2309	46.25	3283	56.75	4258
5.25	62	15.75	549	25.75	1382	36	2332	46.5	3307	57	4281
5.5	68	16	566	26	1405	36.25	2355	46.75	3330	57.25	4304
5.75	75	16.25	584	26.25	1428	36.5	2378	47	3353	57.5	4328
6	81	16.5	602	26.5	1451	36.75	2402	47.25	3376	57.75	4351
6.25	88	16.75	620	26.75	1474	37	2425	47.5	3399	58	4374
6.5	95	17	638	27	1497	37.25	2448	47.75	3423	58.25	4397
6.75	103	17.25	657	27.25	1520	37.5	2471	48	3446	58.5	4420
7	110	17.5	675	27.5	1543	37.75	2495	48.25	3469	58.75	4444
7.25	118	17.75	695	27.75	1566	38	2518	48.5	3492	59	4467
7.5	127	18	714	28	1590	38.25	2541	48.75	3515	59.25	4490
7.75	135	18.25	733	28.25	1613	38.5	2564	49	3539	59.5	4513
8	144	18.5	753	**28.48^**	1634	38.75	2587	49.25	3562	59.75	4536
8.25	153	**18.53***	755	28.5	1636	39	2611	49.5	3585	60	4560
8.5	162	18.75	773	28.75	1659	39.25	2634	49.75	3608	60.25	4583
8.75	172	19	792	29	1682	39.5	2657	50	3631	60.5	4606
9	182	19.25	812	29.25	1706	39.75	2680	50.25	3655	60.75	4629
9.25	192	19.5	832	29.5	1729	40	2703	50.5	3678	61	4652
9.5	202	**19.53#**	834	29.75	1752	40.25	2727	50.75	3701	61.25	4676
9.75	213	19.75	852	30	1775	40.5	2750	51	3724	61.5	4699
10	224	20	873	30.25	1798	40.75	2773	51.25	3747	61.75	4722
10.25	235	20.25	894	30.5	1822	41	2796	51.5	3771	62	4745

Table 2. Volume as a Function of Liquid Level for Tanks TK-CR-002 and TK-CR-003 (2 pages)

Ht. (in.)	Vol. (gal)	Ht. (in.)	Vol. (gal)	Ht. (in.)	Vol. (gal)	Ht. (in.)	Vol. (gal)	Ht. (in.)	Vol. (gal)	Ht. (in.)	Vol. (gal)
62.25	4768	71.5	5633	81	6545	90.5	7457	100	8368	109.5	9280
62.5	4792	71.75	5657	81.25	6569	90.75	7481	100.25	8392	109.75	9304
62.75	4815	72	5681	81.5	6593	91	7505	100.5	8416	110	9328
63	4838	72.25	5705	81.75	6617	91.25	7528	100.75	8440	110.25	9352
63.25	4861	72.5	5729	82	6641	91.5	7552	101	8464	110.5	9376
63.5	4884	72.75	5753	82.25	6665	91.75	7576	101.25	8488	110.75	9400
63.75	4908	73	5777	82.5	6689	92	7600	101.5	8512	111	9424
64	4931	73.25	5801	82.75	6713	92.25	7624	101.75	8536	111.25	9448
64.25	4954	73.5	5825	83	6737	92.5	7648	102	8560	111.5	9472
64.5	4977	73.75	5849	83.25	6761	92.75	7672	102.25	8584	111.75	9496
64.75	5000	74	5873	83.5	6785	93	7696	102.5	8608	112	9520
65	5024	74.25	5897	83.75	6809	93.25	7720	102.75	8632	112.25	9544
65.25	5047	74.5	5921	84	6833	93.5	7744	103	8656	112.5	9568
65.5	5070	74.75	5945	84.25	6857	93.75	7768	103.25	8680	112.75	9592
65.75	5093	75	5969	84.5	6881	94	7792	103.5	8704	113	9616
66	5116	75.25	5993	84.75	6905	94.25	7816	103.75	8728	113.25	9640
66.25	5140	75.5	6017	85	6929	94.5	7840	104	8752	113.5	9664
66.5	5163	75.75	6041	85.25	6953	94.75	7864	104.25	8776	113.75	9688
66.75	5186	76	6065	85.5	6977	95	7888	104.5	8800	114	9712
67	5209	76.25	6089	85.75	7001	95.25	7912	104.75	8824	114.25	9736
67.25	5232	76.5	6113	86	7025	95.5	7936	105	8848	114.5	9760
67.5	5256	76.75	6137	86.25	7049	95.75	7960	105.25	8872	114.75	9784
67.75	5279	77	6161	86.5	7073	96	7984	105.5	8896	115	9808
68	5302	77.25	6185	86.75	7097	96.25	8008	105.75	8920	115.25	9832
68.25	5325	77.5	6209	87	7121	96.5	8032	106	8944	115.5	9856
68.5	5348	77.75	6233	87.25	7145	96.75	8056	106.25	8968	115.75	9880
68.75	5372	78	6257	87.5	7169	97	8080	106.5	8992	116	9904
69	5395	78.25	6281	87.75	7193	97.25	8104	106.75	9016	116.25	9928
69.25	5418	78.5	6305	88	7217	97.5	8128	107	9040	116.5	9952
69.48**	5439	78.75	6329	88.25	7241	97.75	8152	107.25	9064	116.75	9976
69.5	5441	79	6353	88.5	7265	98	8176	107.5	9088	117	10000
69.75	5465	79.25	6377	88.75	7289	98.25	8200	107.75	9112	117.25	10023
70	5489	79.5	6401	89	7313	98.5	8224	108	9136	117.5	10047
70.25	5513	79.75	6425	89.25	7337	98.75	8248	108.25	9160	117.75	10071
70.5	5537	80	6449	89.5	7361	99	8272	108.5	9184	118	10095
70.75	5561	80.25	6473	89.75	7385	99.25	8296	108.75	9208	118.25	10119
71	5585	80.5	6497	90	7409	99.5	8320	109	9232	**118.48@**	10141
71.25	5609	80.75	6521	90.25	7433	99.75	8344	109.25	9256		

Footnotes:
- * Bottom of coil
- # Transition from flange dish to knuckle dish
- ^ Transition from knuckle dish to straight section of tank
- ** Top of coil
- @ Maximum fill height of tank

3.42 244-BXR VAULT / SUMP-BXR-003

Stabilization Evaluation Form: 1985-02-21
Solids Level Reading = 58.00-in
Solids Level Reading Date = 1985-02-18
Waste Level ("Liquid Level") Reading = 62.00-in
Waste Level ("Liquid Level") Reading Date = 1985-02-18

The 244-BXR and 244-CR process vaults use identical cell and vessel designs and dimensions, including process cell floor slope and sump size, and process vessel internals. Calibration tables for 244-CR Vault process vessel and process cell volumes are published in RPP-CALC-24219 Rev. 0, *244-CR Vault Tank and Cell Volume Calculations*, Tables 1 – 5. Since the vault and process vessel designs are identical, RPP-CALC-24219 is used for estimating 244-BXR waste volumes. Refer to the Design Equivalency discussion following the 244-BXR Vault / SUMP-BXR-011 section.

Calibration Table: RPP-CALC-24219 Rev. 0, *244-CR Vault Tank and Cell Volume Calculations*, Table 4

$$Waste\ Volume = 62.00 - in = 7138\ gallons$$
$$Waste\ Volume = 7138\ gallons/(1000\ gallons/kilogallon)$$
$$Waste\ Volume = 7.2\ kilogallons$$

$$Solids\ Volume = 58.00 - in = 6725\ gallons$$

$$Liquid\ Volume = Waste\ Volume - Solids\ Volume$$
$$Liquid\ Volume = 7138\ gallons\ - 6725\ gallons$$
$$Liquid\ Volume = 413\ gallons$$

244-BXR Vault / SUMP-BXR-003 Calibration Table

RPP-CALC-24219, Rev. 0 **Page** 23 **of** 25

Title: 244-CR Vault Tank and Cell Volume Calculations **Identifier:** P-06-18 Rev: 0

Originator: AB Carlson **Date:** 1/10/05

Checker: MM Durst **Date:** 1/10/05

Organizational Manager: MJ Sutey **Date:** 1/12/05

Table 4. Volume as a Function of Liquid Level for Cells CR-002 and CR-003
(As Measured from the Bottom of the Sump)

Ht. (in.)	Vol. (gal)	Ht. (in.)	Vol. (gal)	Ht. (in.)	Vol. (gal)	Ht. (in.)	Vol. (gal)	Ht. (in.)	Vol. (gal)	Ht. (in.)	Vol. (gal)
0	0	11.25	42	22.5	1925	33.5	3879	44.75	5343	56	6518
0.25	0.9	11.5	43	22.75	1975	33.75	3917	45	5370	56.25	6544
0.5	1.9	11.75	44	23	2025	34	3955	45.25	5397	56.5	6570
0.75	2.8	12*	45	23.14^	2052	34.25	3992	45.5	5424	56.75	6596
1	3.7	12.25	47	23.25	2074	34.5	4030	45.75	5451	57	6622
1.25	4.7	12.5	52	23.5	2124	34.75	4067	46	5478	57.25	6647
1.5	5.6	12.75	62	23.75	2173	35	4104	46.25	5505	57.5	6673
1.75	6.5	13	78	24	2222	35.25	4141	46.5	5531	57.75	6699
2	7.5	13.25	102	24.25	2271	35.5	4177	46.75	5558	58	6725
2.25	8.4	13.5	135	24.5	2320	35.75	4213	47	5584	58.25	6751
2.5	9.4	13.75ϕ	179	24.75	2368	36	4249	47.25	5611	58.5	6777
2.75	10	14	229	25	2416	36.25	4285	47.5	5637	58.75	6802
3	11	14.25	279	25.25	2463	36.5	4320	47.75	5664	59	6828
3.25	12	14.5	329	25.5	2511	36.75	4355	48	5690	59.25	6854
3.5	13	14.75	379	25.75	2558	37	4390	48.25	5716	59.5	6880
3.75	14	15	429	26	2604	37.25	4424	48.5	5742	59.75	6906
4	15	15.25	479	26.25	2651	37.5	4459	48.75	5768	60	6932
4.25	16	15.5	529	26.5	2697	37.75	4493	49	5794	60.25	6957
4.5	17	15.75	578	26.75	2743	38	4526	49.25	5820	60.5	6983
4.75	18	16	628	27	2789	38.25	4560	49.5	5846	60.75	7009
5	19	16.25	678	27.25	2834	38.5	4593	49.75	5872	61	7035
5.25	20	16.5	728	27.5	2879	38.75	4626	50	5898	61.25	7061
5.5	21	16.75	778	27.75	2924	39	4659	50.25	5924	61.5	7087
5.75	22	17	828	28	2968	39.25	4691	50.5	5950	61.75	7112
6	22	17.25	878	28.25	3013	39.5	4723	50.75	5976	62	7138
6.25	23	17.5	927	28.5	3057	39.75	4755	51	6002	62.25	7164
6.5	24	17.75	977	28.75	3100	40	4787	51.25	6028	62.5	7190
6.75	25	18	1027	29	3144	40.25	4818	51.5	6053	62.75	7216
7	26	18.25	1077	29.25	3187	40.5	4850	51.75**	6079	63	7241
7.25	27	18.5	1127	29.5	3230	40.75	4881	52	6105	63.25	7267
7.5	28	18.75	1177	29.75	3272	41	4911	52.25	6131	63.5	7293
7.75	29	19	1227	30	3315	41.25	4942	52.5	6157	63.75	7319
8	30	19.25	1277	30.25	3357	41.5	4972	52.75	6183	64	7345
8.25	31	19.5	1326	30.5	3399	41.75	5002	53	6208	64.25	7371
8.5	32	19.75	1376	30.75	3440	42	5031	53.25	6234	64.5	7396
8.75	33	20	1426	31	3481	42.25	5061	53.5	6260	64.75	7422
9	34	20.25	1476	31.25	3522	42.5	5090	53.75	6286	65	7448
9.25	35	20.5	1526	31.5	3563	42.75	5119	54	6312	65.25	7474
9.5	36	20.75	1576	31.75	3603	43	5147	54.25	6338	65.5	7500
9.75	36	21	1626	32	3643	43.25	5176	54.5	6363	65.75	7526
10	37	21.25	1676	32.25	3683	43.5	5204	54.75	6389	66	7551
10.25	38	21.5	1725	32.5	3723	43.75	5232	55	6415		
10.5	39	21.75	1775	32.75	3762	44	5260	55.25	6441		
10.75	40	22	1825	33	3801	44.25	5288	55.5	6467		
11	41	22.25	1875	33.25	3840	44.5	5315	55.75	6492		

Footnotes:

* Top of Sump/Low Point of Floor

ϕ High Point of Floor

^ Bottom of tank TK-CR-002 or TK-CR-003

** Transition between tank dished head and straight side of tank

3.43 244-BXR VAULT / TK-BXR-011

Stabilization Evaluation Form: 1985-02-21
Solids Level Reading = 36.00-in
Solids Level Reading Date = 1984-04
Waste Level ("Liquid Level") Reading = 36.50-in
Waste Level ("Liquid Level") Reading Date = 1984-04

The 244-BXR and 244-CR process vaults use identical cell and vessel designs and dimensions, including process cell floor slope and sump size, and process vessel internals. Calibration tables for 244-CR Vault process vessel and process cell volumes are published in RPP-CALC-24219 Rev. 0, *244-CR Vault Tank and Cell Volume Calculations*, Tables 1 – 5. Since the vault and process vessel designs are identical, RPP-CALC-24219 is used for estimating 244-BXR waste volumes. Refer to the Design Equivalency discussion following the 244-BXR Vault / SUMP-BXR-011 section.

Calibration Table: RPP-CALC-24219 Rev. 0, *244-CR Vault Tank and Cell Volume Calculations*, Table 1

$$Waste\ Volume = 36.50 - in = 4039\ gallons$$
$$Waste\ Volume = 4039\ gallons/(1000\ gallons/kilogallon)$$
$$Waste\ Volume = 4.0\ kilogallons$$

$$Solids\ Volume = 36.00 - in = 3942\ gallons$$

$$Liquid\ Volume = Waste\ Volume - Solids\ Volume$$
$$Liquid\ Volume = 4039\ gallons\ - 3942\ gallons$$
$$Liquid\ Volume = 97\ gallons$$

244-BXR Vault / TK-BXR-011 Calibration Table

RPP-CALC-24219, Rev. 0 **Page** 18 **of** 25

Title: 244-CR Vault Tank and Cell Volume Calculations **Identifier:** P-06-18 **Rev:** 0

Originator: AB Carlson **Date:** 1/10/05

Checker: MM Durst **Date:** 1/10/05

Organizational Manager: MJ Sutey **Date:** 1/13/05

Table 1. Volume as a Function of Liquid Level for Tanks TK-CR-001 and TK-CR-011 (2 pages)

Ht. (in.)	Vol. (gal)	Ht. (in.)	Vol. (gal)	Ht. (in.)	Vol. (gal)	Ht. (in.)	Vol. (gal)	Ht. (in.)	Vol. (gal)	Ht. (in.)	Vol. (gal)	Ht. (in.)	Vol. (gal)	Ht. (in.)	Vol. (gal)
0	0	14.5	672	28.75	2590	43	5309	57.5	8148	72	10988	86.5	13828	101	16667
0.25	0.2	14.75	696	29	2634	43.25	5358	57.75	8197	72.25	11037	86.75	13877	101.25	16716
0.5	0.8	15	719	29.25	2678	43.5	5407	58	8246	72.5	11086	87	13926	101.5	16765
0.75	1.8	15.25	743	29.5	2723	43.75	5456	58.25	8295	72.75	11135	87.25	13975	101.75	16814
1	3.3	15.5	767	29.75	2768	44	5505	58.5	8344	73	11184	87.5	14024	102	16863
1.25	5.1	15.75	792	30	2813	44.25	5554	58.75	8393	73.25	11233	87.75	14073	102.25	16912
1.5	7.3	16	817	30.25	2858	44.5	5603	59	8442	73.5	11282	88	14122	102.5	16961
1.75	10	16.25	842	30.5	2904	44.75	5651	59.25	8491	73.75	11331	88.25	14170	102.75	17010
2	13	16.5	868	30.75	2949	45	5700	59.5	8540	74	11380	88.5	14219	103	17059
2.25	16	16.75	894	31	2995	45.25	5749	59.75	8589	74.25	11429	88.75	14268	103.25	17108
2.5	20	17	921	31.25	3041	45.5	5798	60	8638	74.5	11478	89	14317	103.5	17157
2.75	25	17.25	948	31.5	3088	45.75	5847	60.25	8687	74.75	11527	89.25	14366	103.75	17206
3	29	17.5	975	31.75	3134	46	5896	60.5	8736	75	11576	89.5	14415	104	17255
3.25	34	17.75	1003	32	3181	46.25	5945	60.75	8785	75.25	11625	89.75	14464	104.25	17304
3.5	40	18	1031	32.25	3227	46.5	5994	61	8834	75.5	11674	90	14513	104.5	17353
3.75	46	18.25	1060	32.5	3274	46.75	6043	61.25	8883	75.75	11722	90.25	14562	104.75	17402
4	52	18.5	1088	32.75	3321	47	6092	61.5	8932	76	11771	90.5	14611	105	17451
4.25	59	18.75	1118	33	3368	47.25	6141	61.75	8981	76.25	11820	90.75	14660	105.25	17500
4.5	66	19	1147	33.25	3415	47.5	6190	62	9030	76.5	11869	91	14709	105.5	17549
4.75	73	19.25	1177	33.5	3463	47.75	6239	62.25	9079	76.75	11918	91.25	14758	105.75	17598
5	81	19.5	1208	33.75	3510	48	6288	62.5	9128	77	11967	91.5	14807	106	17647
5.25	89	19.75	1238	34	3558	48.25	6337	62.75	9177	77.25	12016	91.75	14856	106.25	17696
5.5	98	20	1269	34.25	3606	48.5	6386	63	9226	77.5	12065	92	14905	106.5	17745
5.75	107	20.25	1301	34.5	3653	48.75	6435	63.25	9274	77.75	12114	92.25	14954	106.75	17794
6	117	20.5	1333	34.75	3701	49	6484	63.5	9323	78	12163	92.5	15003	107	17842
6.25	126	20.75	1365	35	3749	49.25	6533	63.75	9372	78.25	12212	92.75	15052	107.25	17891
6.5	137	21	1397	35.25	3797	49.5	6582	64	9421	78.5	12261	93	15101	107.5	17940
6.75	147	21.25	1430	35.5	3845	49.75	6631	64.25	9470	78.75	12310	93.25	15150	107.75	17989
7	158	21.5	1464	35.75	3894	50	6680	64.5	9519	79	12359	93.5	15199	108	18038
7.25	170	21.75	1497	36	3942	50.25	6729	64.75	9568	79.25	12408	93.75	15248	108.25	18087
7.5	182	22	1532	36.25	3990	50.5	6778	65	9617	79.5	12457	94	15297	108.5	18136
7.75	194	22.25	1566	36.5	4039	50.75	6826	65.25	9666	79.75	12506	94.25	15346	108.75	18185
8	207	22.5	1601	36.75	4087	51	6875	65.5	9715	80	12555	94.5	15394	109	18234
8.25	220	22.75	1636	37	4136	51.25	6924	65.75	9764	80.25	12604	94.75	15443	109.25	18283
8.5	233	23	1671	37.25	4184	51.5	6973	66	9813	80.5	12653	95	15492	109.5	18332
8.75	247	23.25	1707	37.5	4233	51.75	7022	66.25	9862	80.75	12702	95.25	15541	109.75	18381
9	261	23.5	1744	37.75	4282	52	7071	66.5	9911	81	12751	95.5	15590	110	18430
9.25	276	23.75	1780	38	4330	52.25	7120	66.75	9960	81.25	12800	95.75	15639	110.25	18479
9.5	291	24	1817	38.25	4379	52.5	7169	67	10009	81.5	12849	96	15688	110.5	18528
9.75	306	24.25	1855	38.5	4428	52.75	7218	67.25	10058	81.75	12898	96.25	15737	110.75	18577
10	322	24.5	1893	38.75	4477	53	7267	67.5	10107	82	12946	96.5	15786	111	18626
10.25	338	24.75	1931	39	4526	53.25	7316	67.75	10156	82.25	12995	96.75	15835	111.25	18675
10.5	355	25	1969	39.25	4574	53.5	7365	68	10205	82.5	13044	97	15884	111.5	18724
10.75	372	25.25	2008	39.5	4623	53.75	7414	68.25	10254	82.75	13093	97.25	15933	111.75	18773
11	389	25.5	2047	39.75	4672	54	7463	68.5	10303	83	13142	97.5	15982	112	18822
11.25	407	25.75	2087	40	4721	54.25	7512	68.75	10352	83.25	13191	97.75	16031	112.25	18871
11.5	425	26	2127	40.25	4770	54.5	7561	69	10401	83.5	13240	98	16080	112.5	18920
11.75	443	26.25	2167	40.5	4819	54.75	7610	69.25	10450	83.75	13289	98.25	16129	112.75	18969
12	462	26.5	2208	40.70*	4859	55	7659	69.5	10498	84	13338	98.5	16178	113	19018
12.25	481	26.75	2249	40.75	4868	55.25	7708	69.75	10547	84.25	13387	98.75	16227	113.25	19066
12.5	501	27	2290	41	4917	55.5	7757	70	10596	84.5	13436	99	16276	113.5	19115
12.75	521	27.25	2332	41.25	4966	55.75	7806	70.25	10645	84.75	13485	99.25	16325	113.75	19164
13	542	27.5	2374	41.5	5015	56	7855	70.5	10694	85	13534	99.5	16374	114	19213
13.25	562	27.75	2417	41.75	5064	56.25	7904	70.75	10743	85.25	13583	99.75	16423	114.25	19262
13.5	584	27.89*	2440	42	5113	56.5	7953	71	10792	85.5	13632	100	16472	114.5	19311
13.75	605	28	2459	42.25	5162	56.75	8002	71.25	10841	85.75	13681	100.25	16521	114.75	19360
14	627	28.25	2503	42.5	5211	57	8050	71.5	10890	86	13730	100.5	16570	115	19409
14.25	650	28.5	2546	42.75	5260	57.25	8099	71.75	10939	86.25	13779	100.75	16618	115.25	19458

Title: 244-CR Vault Tank and Cell Volume Calculations **Identifier:** P-06-18 Rev: 0
Originator: AB Carlson **Date:** 1/10/05
Checker: MM Durst **Date:** 1/10/05
Organizational Manager: MJ Sutey **Date:** 1/13/05

Table 1. Volume as a Function of Liquid Level for Tanks TK-CR-001 and TK-CR-011 (2 pages)

Ht. (in.)	Vol. (gal)	Ht. (in.)	Vol. (gal)	Ht. (in.)	Vol. (gal)	Ht. (in.)	Vol. (gal)	Ht. (in.)	Vol. (gal)	Ht. (in.)	Vol. (gal)	Ht. (in.)	Vol. (gal)	Ht. (in.)	Vol. (gal)
115.5	19507	128.75	22102	142	24697	155.25	27292	168.5	29887	181.75	32481	195	35076	208.25	37671
115.75	19556	129	22151	142.25	24746	155.5	27341	168.75	29936	182	32530	195.25	35125	208.5	37720
116	19605	129.25	22200	142.5	24795	155.75	27390	169	29985	182.25	32579	195.5	35174	208.75	37769
116.25	19654	129.5	22249	142.75	24844	156	27439	169.25	30033	182.5	32628	195.75	35223	209	37818
116.5	19703	129.75	22298	143	24893	156.25	27488	169.5	30082	182.75	32677	196	35272	209.25	37867
116.75	19752	130	22347	143.25	24942	156.5	27537	169.75	30131	183	32726	196.25	35321	209.5	37916
117	19801	130.25	22396	143.5	24991	156.75	27585	170	30180	183.25	32775	196.5	35370	209.75	37965
117.25	19850	130.5	22445	143.75	25040	157	27634	170.25	30229	183.5	32824	196.75	35419	210	38014
117.5	19899	130.75	22494	144	25089	157.25	27683	170.5	30278	183.75	32873	197	35468	210.25	38063
117.75	19948	131	22543	144.25	25137	157.5	27732	170.75	30327	184	32922	197.25	35517	210.5	38112
118	19997	131.25	22592	144.5	25186	157.75	27781	171	30376	184.25	32971	197.5	35566	210.75	38161
118.25	20046	131.5	22641	144.75	25235	158	27830	171.25	30425	184.5	33020	197.75	35615	211	38210
118.5	20095	131.75	22689	145	25284	158.25	27879	171.5	30474	184.75	33069	198	35664	211.25	38259
118.75	20144	132	22738	145.25	25333	158.5	27928	171.75	30523	185	33118	198.25	35713	211.5	38308
119	20193	132.25	22787	145.5	25382	158.75	27977	172	30572	185.25	33167	198.5	35762	211.75	38357
119.25	20242	132.5	22836	145.75	25431	159	28026	172.25	30621	185.5	33216	198.75	35811	212	38406
119.5	20290	132.75	22885	146	25480	159.25	28075	172.5	30670	185.75	33265	199	35860	212.25	38455
119.75	20339	133	22934	146.25	25529	159.5	28124	172.75	30719	186	33314	199.25	35909	212.5	38504
120	20388	133.25	22983	146.5	25578	159.75	28173	173	30768	186.25	33363	199.5	35958	212.75	38553
120.25	20437	133.5	23032	146.75	25627	160	28222	173.25	30817	186.5	33412	199.75	36007	213	38601
120.5	20486	133.75	23081	147	25676	160.25	28271	173.5	30866	186.75	33461	200	36056	213.25	38650
120.75	20535	134	23130	147.25	25725	160.5	28320	173.75	30915	187	33510	200.25	36105	213.5	38699
121	20584	134.25	23179	147.5	25774	160.75	28369	174	30964	187.25	33559	200.5	36153	213.75	38748
121.25	20633	134.5	23228	147.75	25823	161	28418	174.25	31013	187.5	33608	200.75	36202	214	38797
121.5	20682	134.75	23277	148	25872	161.25	28467	174.5	31062	187.75	33657	201	36251	214.25	38846
121.75	20731	135	23326	148.25	25921	161.5	28516	174.75	31111	188	33705	201.25	36300	214.5	38895
122	20780	135.25	23375	148.5	25970	161.75	28565	175	31160	188.25	33754	201.5	36349	214.75	38944
122.25	20829	135.5	23424	148.75	26019	162	28614	175.25	31209	188.5	33803	201.75	36398	215	38993
122.5	20878	135.75	23473	149	26068	162.25	28663	175.5	31257	188.75	33852	202	36447	215.25	39042
122.75	20927	136	23522	149.25	26117	162.5	28712	175.75	31306	189	33901	202.25	36496	215.5	39091
123	20976	136.25	23571	149.5	26166	162.75	28761	176	31355	189.25	33950	202.5	36545	215.75	39140
123.25	21025	136.5	23620	149.75	26215	163	28809	176.25	31404	189.5	33999	202.75	36594	216	39189
123.5	21074	136.75	23669	150	26264	163.25	28858	176.5	31453	189.75	34048	203	36643	216.25	39238
123.75	21123	137	23718	150.25	26313	163.5	28907	176.75	31502	190	34097	203.25	36692	216.5	39287
124	21172	137.25	23767	150.5	26361	163.75	28956	177	31551	190.25	34146	203.5	36741	216.75	39336
124.25	21221	137.5	23816	150.75	26410	164	29005	177.25	31600	190.5	34195	203.75	36790	217	39385
124.5	21270	137.75	23865	151	26459	164.25	29054	177.5	31649	190.75	34244	204	36839	217.25	39434
124.75	21319	138	23913	151.25	26508	164.5	29103	177.75	31698	191	34293	204.25	36888	217.5	39483
125	21368	138.25	23962	151.5	26557	164.75	29152	178	31747	191.25	34342	204.5	36937	217.75	39532
125.25	21417	138.5	24011	151.75	26606	165	29201	178.25	31796	191.5	34391	204.75	36986	218	39581
125.5	21466	138.75	24060	152	26655	165.25	29250	178.5	31845	191.75	34440	205	37035	218.25	39630
125.75	21514	139	24109	152.25	26704	165.5	29299	178.75	31894	192	34489	205.25	37084	218.5	39679
126	21563	139.25	24158	152.5	26753	165.75	29348	179	31943	192.25	34538	205.5	37133	218.75	39728
126.25	21612	139.5	24207	152.75	26802	166	29397	179.25	31992	192.5	34587	205.75	37182	219	39776
126.5	21661	139.75	24256	153	26851	166.25	29446	179.5	32041	192.75	34636	206	37231	219.25	39825
126.75	21710	140	24305	153.25	26900	166.5	29495	179.75	32090	193	34685	206.25	37280	219.5	39874
127	21759	140.25	24354	153.5	26949	166.75	29544	180	32139	193.25	34734	206.5	37329	219.75	39923
127.25	21808	140.5	24403	153.75	26998	167	29593	180.25	32188	193.5	34783	206.75	37377	220	39972
127.5	21857	140.75	24452	154	27047	167.25	29642	180.5	32237	193.75	34832	207	37426	220.25	40021
127.75	21906	141	24501	154.25	27096	167.5	29691	180.75	32286	194	34881	207.25	37475	220.5	40070
128	21955	141.25	24550	154.5	27145	167.75	29740	181	32335	194.25	34929	207.5	37524	220.70^	40110
128.25	22004	141.5	24599	154.75	27194	168	29789	181.25	32384	194.5	34978	207.75	37573		
128.5	22053	141.75	24648	155	27243	168.25	29838	181.5	32433	194.75	35027	208	37622		

Footnotes:

* Transition from flange dish to knuckle dish

\# Transition from knuckle dish to straight section of tank

^ Maximum fill height of tank

3.44 244-BXR VAULT / SUMP-BXR-011

Stabilization Evaluation Form: 1985-02-21
Solids Level Reading = 40.25-in
Solids Level Reading Date = 1985-01-24
Waste Level ("Liquid Level") Reading = 40.25-in
Waste Level ("Liquid Level") Reading Date = 1985-01-24

The 244-BXR and 244-CR process vaults use identical cell and vessel designs and dimensions, including process cell floor slope and sump size, and process vessel internals. Calibration tables for 244-CR Vault process vessel and process cell volumes are published in RPP-CALC-24219 Rev. 0, *244-CR Vault Tank and Cell Volume Calculations*, Tables 1 – 5. Since the vault and process vessel designs are identical, RPP-CALC-24219 is used for estimating 244-BXR waste volumes. Refer to the Design Equivalency discussion following this section.

Calibration Table: RPP-CALC-24219 Rev. 0, *244-CR Vault Tank and Cell Volume Calculations*, Table 5

$$Waste\ Volume = 40.25 - in = 7616\ gallons$$
$$Waste\ Volume = 7616\ gallons/(1000\ gallons/kilogallon)$$
$$Waste\ Volume = 7.6\ kilogallons$$

$$Solids\ Volume = 40.25 - in = 7616\ gallons$$

$$Liquid\ Volume = Waste\ Volume - Solids\ Volume$$
$$Liquid\ Volume = 7616\ gallons\ -\ 7616\ gallons$$
$$Liquid\ Volume = 0\ gallons$$

244-BXR Vault / SUMP-BXR-011 Calibration Table

RPP-CALC-24219, Rev. 0 Page 24 of 25

Title: 244-CR Vault Tank and Cell Volume Calculations **Identifier:** P-06-18 Rev: 0

Originator: AB Carlson **Date:** 1/10/05

Checker: MM Durst **Date:** 1/10/05

Organizational Manager: MJ Sutey **Date:** 1/13/05

Table 5. Volume as a Function of Liquid Level for Cell CR-011
(As Measured from the Bottom of the Sump)

Ht. (in.)	Vol. (gal)	Ht. (in.)	Vol. (gal)	Ht. (in.)	Vol. (gal)	Ht. (in.)	Vol. (gal)	Ht. (in.)	Vol. (gal)	Ht. (in.)	Vol. (gal)
0	0	11.25	42	22.25	2307	33.5	5862	44.75	8631	56	10698
0.25	0.9	11.5	43	22.5	2395	33.75	5932	45	8684	56.25	10739
0.5	1.9	11.75	44	22.75	2482	34	6002	45.25	8737	56.5	10780
0.75	2.8	12*	45	23	2569	34.25	6071	45.5	8789	56.75	10821
1	3.7	12.25	47	23.25	2656	34.5	6140	45.75	8841	57	10862
1.25	4.7	12.5	51	23.5	2742	34.75	6208	46	8892	57.25	10903
1.5	5.6	12.75	57	23.75	2828	35	6276	46.25	8943	57.5	10944
1.75	6.5	13	66	24	2913	35.25	6344	46.5	8994	57.75	10985
2	7.5	13.25	77	24.25	2998	35.5	6411	46.75	9044	58	11025
2.25	8.4	13.5	93	24.5	3083	35.75	6478	47	9094	58.25	11066
2.5	9.4	13.75	112	24.75	3167	36	6544	47.25	9144	58.5	11106
2.75	10	14	135	25	3251	36.25	6610	47.5	9193	58.75	11147
3	11	14.25	163	25.25	3334	36.5	6676	47.75	9242	59	11187
3.25	12	14.5#	195	25.5	3417	36.75	6741	48	9290	59.25	11228
3.5	13	14.75	230	25.75	3499	37	6806	48.25	9339	59.5	11268
3.75	14	15	265	26	3582	37.25	6871	48.5	9386	59.75	11308
4	15	15.25	300	26.25	3663	37.5	6935	48.75	9434	60	11349
4.25	16	15.5	335	26.5	3745	37.75	6999	49	9481	60.25	11389
4.5	17	15.75	370	26.75	3826	38	7062	49.25	9528	60.5	11429
4.75	18	16	405	27	3906	38.25	7125	49.5	9574	60.75	11469
5	19	16.25	440	27.25	3986	38.5	7188	49.75	9620	61	11509
5.25	20	16.5	475	27.5	4066	38.75	7250	50	9666	61.25	11549
5.5	21	16.75	510	27.75	4146	39	7312	50.25	9711	61.5	11589
5.75	22	17	545	28	4225	39.25	7373	50.5	9756	61.75	11629
6	22	17.25	580	28.25	4303	39.5	7434	50.75	9801	62	11670
6.25	23	17.5	615	28.5	4381	39.75	7495	51	9845	62.25	11710
6.5	24	17.75	704	28.75	4459	40	7556	51.25	9890	62.5**	11750
6.75	25	18	793	29	4537	40.25	7616	51.5	9934	62.75	11790
7	26	18.25	882	29.25	4613	40.5	7675	51.75	9978	63	11830
7.25	27	18.5	971	29.5	4690	40.75	7734	52	10021	63.25	11870
7.5	28	18.75	1060	29.75	4766	41	7793	52.25	10065	63.5	11910
7.75	29	19	1149	30	4842	41.25	7852	52.5	10108	63.75	11950
8	30	19.25	1239	30.25	4918	41.5	7910	52.75	10151	64	11990
8.25	31	19.5	1328	30.5	4993	41.75	7968	53	10194	64.25	12030
8.5	32	19.75	1417	30.75	5067	42	8025	53.25	10237	64.5	12070
8.75	33	20	1506	31	5141	42.25	8082	53.5	10279	64.75	12110
9	34	20.25	1595	31.25	5215	42.5	8139	53.75	10322	65	12150
9.25	35	20.5	1684	31.5	5289	42.75	8195	54	10364	65.25	12190
9.5	36	20.75	1773	31.75	5362	43	8251	54.25	10406	65.5	12230
9.75	36	21	1863	32	5434	43.25	8306	54.5	10448	65.75	12270
10	37	21.25	1952	32.25	5507	43.5	8361	54.75	10490	66	12310
10.25	38	21.5	2041	32.5	5579	43.75	8416	55	10532		
10.5	39	21.57^	2065	32.75	5650	44	8470	55.25	10574		
10.75	40	21.75	2130	33	5721	44.25	8524	55.5	10615		
11	41	22	2219	33.25	5792	44.5	8578	55.75	10657		

Footnotes:

* Top of Sump/Low Point of Floor

\# High Point of Floor

^ Bottom of tank TK-CR-011

** Transition between tank dished head and straight side of tank

244-BXR Vault Basis for Waste Volume Estimate

244-BXR Process Vault Basis for Waste Volume Estimate:

Cells BXR-001, BXR-002, BXR-003, and BXR-011
Sumps BXR-001, BXR-002, BXR-003, and BXR-011
Tanks TK-BXR-001, TK-BXR-002, TK-BXR-003, and TK-BXR-011

Prepared: May 14, 2014
D. J. Washenfelder

References:

1. H-2-41089 Rev. 2, *Vessel Assemby & Details 14'-0" x 12' Tank - TK-CR-002, TK-CR-003, TK-BXR-002, TK-BXR-003, TK-TXR-002, TK-TXR-003*
2. H-2-41090 Sheet 1 Rev. 1, *Vessel Details 14'-0" x 12'-0" Tank TK-CR-002, TK-CR-003, TK-BXR-002, TK-BXR-003, TK-TXR-002, TK-TXR-003*
3. H-2-41108 Sheet 1 Rev. 3, *Vessel Assembly & Details 20'-0" x 19'-2" Tank TK-CR-011 & TK-BXR-011*
4. H-2-41688 Sheet 1 Rev. 3, *Vessel Assembly Details 20'-0" x 19'-2" Tank TK-CR-001, TK-BXR-001, TK-TXR-001*
5. H-2-41888 Sheet 1 Rev. 3, *Structural - Concrete Plans & Details - Process Tank Vault*
6. H-2-41889 Sheet 1 Rev. 2, *Structural - Concrete - Sections and Details - Process Tank Vault Sheet #1*
7. H-2-42485 Sheet 1 Rev. 3, *Structural - Concrete - Plans & Details - Process Cell Vault*
8. RPP-CALC-24219 Rev. 0, *244-CR Vault Tank and Cell Volume Calculations*

The 244-BXR and 244-CR process vaults use identical cell and vessel designs and dimensions, including process cell floor slope and sump size, and process vessel internals. Equivalent drawings for the two process vaults are shown below.

244-BXR and 244-CR Process Vault Design Equivalency		
Feature	244-BXR Process Vault	244-CR Process Vault
Process Cell Design	H-2-42485 H-2-42486	H-2-41888 H-2-41889
TK-001	H-2-41688	H-2-41688
TK-002, TK-003	H-2-41089 H-2-41090	H-2-41089 H-2-41090
TK-011	H-2-41688	H-2-41688

Calibration tables for 244-CR Vault process vessel and process cell volumes are published in RPP-CALC-24219 Rev. 0, *244-CR Vault Tank and Cell Volume* Calculations, Tables 1 - 5.

1

Since the vault and process vessel designs are identical, RPP-CALC-24219 is used for estimating 244-BX waste volumes.

244-BXR Process Vault Waste Volumes:

Feature Identification	Liquid Data Date	Liquid Height (in)	Liquid Volume (gal)	Solids Data Date	Solids Height (in)	Solids Volume (gal)	Total Volume (gal)	Reference
TK-BXR-001	11/1984	37.00	0	11/1984	37.00	4136	4136	1
TK-BXR-001 Sump	04/1984	4.00	15	04/1984	0	0	15	1
TK-BXR-002	02/20/1985	23.00	340	04/1984	19.00	792	1132	1
TK-BXR-002 Sump	02/1985	13.00	37	02/1985	11.00	41	78	1
TK-BXR-003	02/18/1985	19.00	277	04/1984	15.25	515	792	1
TK-BXR-003 Sump	02/18/1985	62.00	413	02/18/1985	58.00	6725	7138	1
TK-BXR-011	04/1984	36.50	97	04/1984	36.00	3942	4039	1
TK-BXR-011 Sump	01/24/85	40.25	0	01/24/85	40.25	7616	7616	1
Table Notes and References: (1) Stabilization Evaluation Forms (attached)								

Calculations:

TK-BXR-001, from RPP-CALC-24219 Rev. 0, Table 1:

$$Waste\ Volume = 37.00 - in = 4136\ gallons$$
$$Waste\ Volume = 4136\ gallons/(1000\ gallons/kilogallon)$$
$$Waste\ Volume = 4.1\ kilogallons$$

$$Liquid\ Volume = 4136\ gallons\ (37.00 - in) - 4136\ gallons\ (37.00 - in)$$
$$Liquid\ Volume = 0\ gallons$$

$$Solids\ Volume = 4136\ gallons\ (37.00 - in)$$

2

TK-BXR-001 Sump, from RPP-CALC-24219 Rev. 0, Table 3:

$Waste\ Volume = 4.00 - in = 15\ gallons$
$Waste\ Volume = 15\ gallons/(1000\ gallons/kilogallon)$
$Waste\ Volume =< 0.10\ kilogallons$

$Liquid\ Volume = 15\ gallons\ (4.00 - in) - 0\ gallons\ (0.00 - in)$
$Liquid\ Volume = 15\ gallons$

$Solids\ Volume = 0\ gallons\ (0.00 - in)$

TK-BXR-002, from RPP-CALC-24219 Rev. 0, Table 2:

$Waste\ Volume = 23.00 - in = 1132\ gallons$
$Waste\ Volume = 1132\ gallons/(1000\ gallons/kilogallon)$
$Waste\ Volume = 1.1\ kilogallons$

$Liquid\ Volume = 1132\ gallons\ (23.00 - in) - 792\ gallons\ (19.00 - in)$
$Liquid\ Volume = 340\ gallons$

$Solids\ Volume = 792\ gallons\ (19.00 - in)$

TK-BXR-002 Sump, from RPP-CALC-24219 Rev. 0, Table 4:

$Waste\ Volume = 13.00 - in = 78\ gallons$
$Waste\ Volume = 78\ gallons/(1000\ gallons/kilogallon)$
$Waste\ Volume =< 0.10\ kilogallons$

$Liquid\ Volume = 78\ gallons\ (13 - in) - 41\ gallons\ (11 - in)$
$Liquid\ Volume = 37\ gallons$

$Solids\ Volume = 41\ gallons\ (11 - in)$

TK-BXR-003, from RPP-CALC-24219 Rev. 0, Table 2:

$Waste\ Volume = 19.00 - in = 792\ gallons$
$Waste\ Volume = 792\ gallons/(1000\ gallons/kilogallon)$
$Waste\ Volume = 0.79\ kilogallons$

$Liquid\ Volume = 792\ gallons\ (19.00 - in) - 515\ gallons\ (15.25 - in)$
$Liquid\ Volume = 277\ gallons$

$Solids\ Volume = 515\ gallons\ (15.25 - in)$

3

TK-BXR-003 Sump, from RPP-CALC-24219 Rev. 0, Table 4:

$Waste\ Volume = 62.00 - in = 7138\ gallons$
$Waste\ Volume = 7138\ gallons/(1000\ gallons/kilogallon)$
$Waste\ Volume = 7.2\ kilogallons$

$Liquid\ Volume = 7138\ gallons\ (62.00 - in) - 6725\ gallons\ (58.00 - in)$
$Liquid\ Volume = 413\ gallons$

$Solids\ Volume = 6725\ gallons\ (58.00 - in)$

TK-BXR-011, from RPP-CALC-24219 Rev. 0, Table 1:

$Waste\ Volume = 36.50 - in = 4039\ gallons$
$Waste\ Volume = 4039\ gallons/(1000\ gallons/kilogallon)$
$Waste\ Volume = 4.0\ kilogallons$

$Liquid\ Volume = 4039\ gallons\ (36.50 - in) - 3942\ gallons\ (36.00 - in)$
$Liquid\ Volume = 97\ gallons$

$Solids\ Volume = 3942\ gallons\ (36.00\text{-}in)$

TK-BXR-011 Sump, from RPP-CALC-24219 Rev. 0, Table 5:

$Waste\ Volume = 40.25 - in = 7616\ gallons$
$Waste\ Volume = 7616\ gallons/(1000\ gallons/kilogallon)$
$Waste\ Volume = 7.6\ kilogallons$

$Liquid\ Volume = 7616\ gallons\ (40.25 - in) - 7616\ gallons\ (40.25 - in)$
$Liquid\ Volume = 0\ gallons$

$Solids\ Volume = 7616\ gallons\ (40.25 - in)$

4

244-BXR Vault Stabilization Evaluation Forms

6

STABILIZATION EVALUATION FORM

Tank: BXR-001

Evaluation (see continuation page for calculations and additional comments):

(X) Tank history review completed

(X) Tank composition data reviewed

Tank Description: TANK USED FOR URANIUM RECOVERY. FOR GEOMETRY OF TANK SEE ATTACHED SHEET

Solids Level: 37.00 Date: 11-84 Method: PAN CAKE -

Liquid Level: 37.00 Date: 11-84 Method: MANUAL TAPE

Estimated Supernatant Volume (gal): 0 GAL

Interim Stabilization Criteria: LESS THAN 400 GALLONS
(400 gallons or the volume of four inches of supernatant, whichever is greater)

( ) Cost/Benefit Analysis attached

Evaluation performed by: D.W. Fukumoto Date: 11/28/84

Checked by: E.W. Wiss Date: 2-20-85

Disposition of Tank:

(X) Tank Interim Stabilized at 0 gallons of supernatant liquid

( ) Tank not Interim Stabilized; stabilization activities resumed

Approved by: RA Gilbert — Manager, TF&EPC — 2/21/85 Date

A.G. Dunkelman — Manager, TFS&O — 2-21-85 Date

R.D. Gilbert — Program Manager — 2-21-85 Date

DISTRIBUTION: TF&EPC Tank File, Tank Farm Surveillance Analysis, Approval Signatures

10.25 1988.75

7

EVALUATION CALCULATIONS AND COMMENTS

Tank: BXR-001

Tank Geometry:

TOP OF RISER TO BOTTOM OF TANK 43'6"
TOP OF RISER TO BOTTOM OF SUMP 45'-2 1/2"

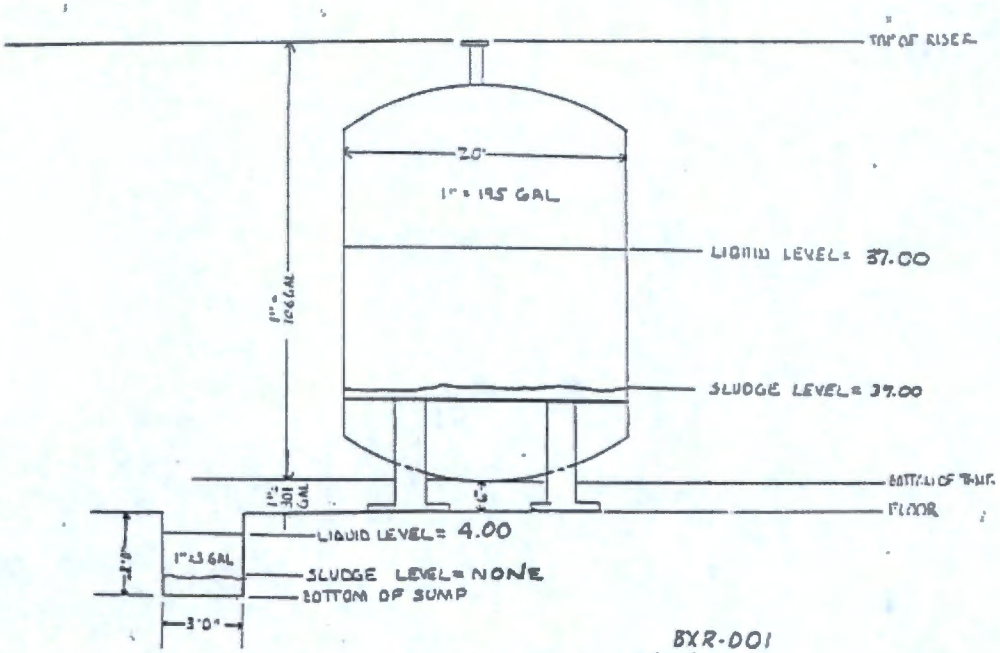

BXR-001

Calculations made by: DW. Fukumoto 4/2/84

Checked by: EWCuss 2-20-85

REF DWG # H-2-41088

6

STABILIZATION EVALUATION FORM

Tank: BXR-001 SUMP

Evaluation (see continuation page for calculations and additional comments):

(X) Tank history review completed

(X) Tank composition data reviewed

Tank Description: CELL SUMP

Solids Level: NONE Date: 4-84 Method: DOUGHNUT

Liquid Level: 4.00 Date: 4-84 Method: MANUAL TAPE

Estimated Supernatant Volume (gal): 12 GAL

Interim Stabilization Criteria: LESS THAN 400 GALLONS
(400 gallons or the volume of four inches of supernatant, whichever is greater)

( ) Cost/Benefit Analysis attached

Evaluation performed by: D.W. Fukumoto Date: 11/30/84

Checked by: E.W. Weiss Date: 2-20-85

Disposition of Tank:

( ) Tank Interim Stabilized at 12 gallons of supernatant liquid

( ) Tank not Interim Stabilized; stabilization activities resumed

Approved by: RW [signature] Manager, TF&EPC 2/21/85 Date

[signature] Manager, TFS&O 2-21-85 Date

R.A. [signature] Program Manager 2-21-85 Date

DISTRIBUTION: TF&EPC Tank File, Tank Farm Surveillance Analysis, Approval Signatures

6

STABILIZATION EVALUATION FORM

Tank: BXR-002

Evaluation (see continuation page for calculations and additional comments):

(X) Tank history review completed

(X) Tank composition data reviewed

Tank Description: TANK USED FOR URANIUM RECOVERY FOR GEOMETRY OF TANK SEE ATTACHED SHEET

Solids Level: 19.00 Date: 4-84 Method: DOUGHNUT

Liquid Level: 23.00 Date: 2-20-85 Method: ZIP CORD

Estimated Supernatant Volume (gal): 380

Interim Stabilization Criteria: <400 GAL
(400 gallons or the volume of four inches of supernatant, whichever is greater)

( ) Cost/Benefit Analysis attached

Evaluation performed by: E W Cass Date: 2-20-85

Checked by: R Van Mek Date: 2-20-85

Disposition of Tank:

(✓) Tank Interim Stabilized at _____ gallons of supernatant liquid

( ) Tank not Interim Stabilized; stabilization activities resumed

Approved by: RAV [signature] 2/21/85
Manager, TF&EPC Date

[signature] 2-21-85
Manager, TFS&O Date

RD [signature] 2-21-85
Program Manager Date

DISTRIBUTION: TF&EPC Tank File, Tank Farm Surveillance Analysis, Approval Signatures

7

EVALUATION CALCULATIONS AND COMMENTS

Tank: BXR-002

Tank Geometry:

TOP OF RISER TO BOTTOM OF TANK 33'6"
TOP OF RISER TO BOTTOM OF SUMP 35'1 3/4"

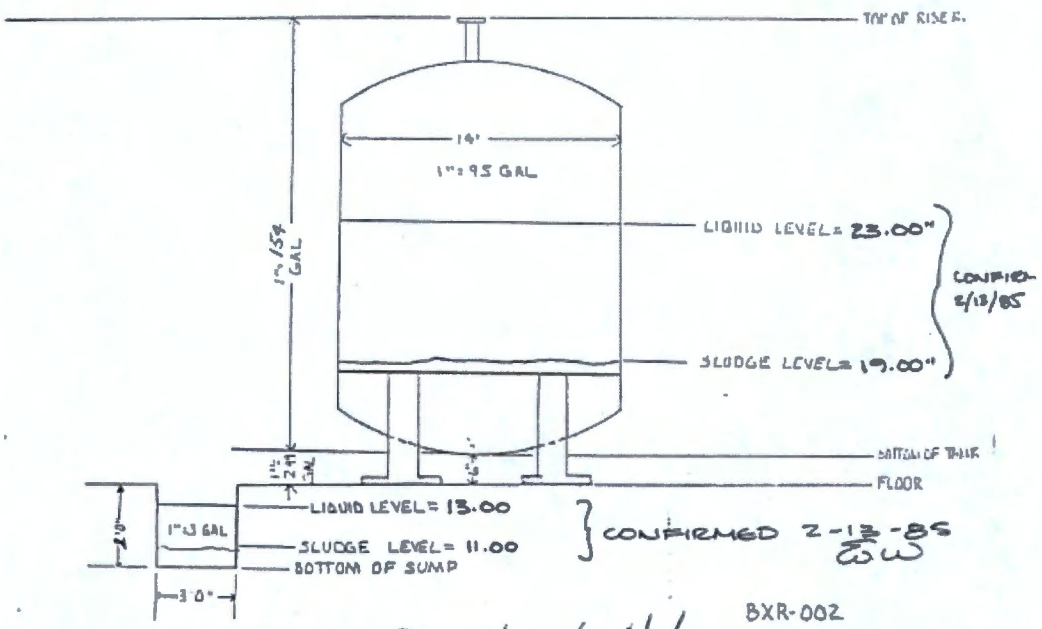

BXR-002

Calculations made by: D.W. Fukumoto 4/2/84

Checked by: E.W. Reid 4/10/84

REF DWG # H-2-41089

6

STABILIZATION EVALUATION FORM

Tank: BXR-002 SUMP

Evaluation (see continuation page for calculations and additional comments):

(X) Tank history review completed

(X) Tank composition data reviewed

Tank Description:
CELL SUMP

Solids Level: 11.00" Date: 2-85 Method: DOUGHNUT

Liquid Level: 13.00" Date: 2-85 Method: ZIPCORD

Estimated Supernatant Volume (gal): 252

Interim Stabilization Criteria: < 400 GAL
(400 gallons or the volume of four inches of supernatant, whichever is greater)

( ) Cost/Benefit Analysis attached

Evaluation performed by: E. Weiss Date: 2-20-85

Checked by: R. Van Meter Date: 2-20-85

Disposition of Tank:

(✓) Tank Interim Stabilized at 250 gallons of supernatant liquid

( ) Tank not Interim Stabilized; stabilization activities resumed

Approved by: RAV [illegible] 2/21/85
Manager, TF&EPC Date

[illegible] 2-21-85
Manager, TFS&O Date

R.D. [illegible] 2-21-85
Program Manager Date

DISTRIBUTION: TF&EPC Tank File, Tank Farm Surveillance Analysis, Approval Signatures

6

STABILIZATION EVALUATION FORM

Tank: BXR-003

Evaluation (see continuation page for calculations and additional comments):

(X) Tank history review completed

(X) Tank composition data reviewed

Tank Description: TANK USED FOR URANIUM RECOVERY FOR GEOMETRY OF TANK SEE ATTACHED SHEET

Solids Level: 15.25 Date: 4-84 Method: DOUGHNUT

Liquid Level: 19.00" Date: 2-18-85 Method: ZIP CORD

Estimated Supernatant Volume (gal): 350

Interim Stabilization Criteria: 2400 GAL
(400 gallons or the volume of four inches of supernatant, whichever is greater)

( ) Cost/Benefit Analysis attached

Evaluation performed by: E W Weiss Date: 2-20-85

Checked by: L R Van Meter Date: 2-20-85

Disposition of Tank:

(✓) Tank Interim Stabilized at 360 gallons of supernatant liquid

( ) Tank not Interim Stabilized; stabilization activities resumed

Approved by: RW [illegible] 2/21/85
Manager, TF&EPC Date

[illegible] 2-21-85
Manager, TF&SO Date

RD [illegible] 2-21-85
Program Manager Date

DISTRIBUTION: TF&EPC Tank File, Tank Farm Surveillance Analysis, Approval Signatures

7

EVALUATION CALCULATIONS AND COMMENTS

Tank: BXR-003

Tank Geometry:

TOP OF RISER TO BOTTOM OF TANK 33'6"
TOP OF RISER TO BOTTOM OF SUMP 35'1 3/4"

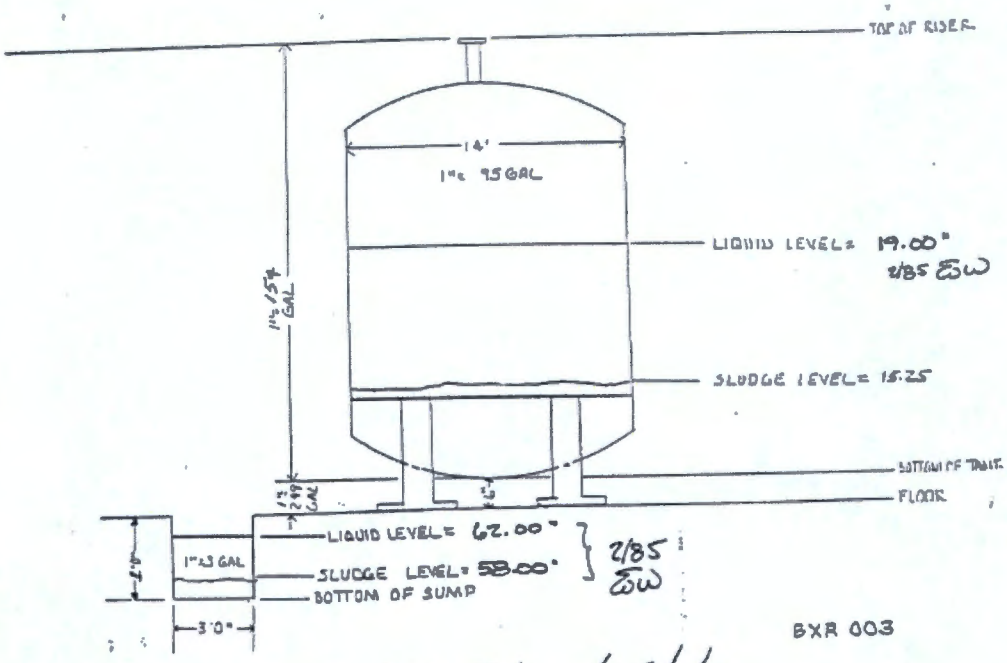

Calculations made by: D. W. Fukumoto 4/2/89

Checked by: [illegible] 4/10/89

REF DWG # H-2-41089

6

STABILIZATION EVALUATION FORM

Tank: BYR-003 SUMP

Evaluation (see continuation page for calculations and additional comments):

(X) Tank history review completed

(X) Tank composition data reviewed

Tank Description:
CELL SUMP

(SOFT SLUDGE)
Solids Level: 58.00" Date: 2-18-85 Method: ZIP CORD

Liquid Level: 62.00" Date: 2-18-85 Method: ZIP CORD

Estimated Supernatant Volume (gal): 616

Interim Stabilization Criteria: 4" SUPERNANT
(400 gallons or the volume of four inches of supernatant, whichever is greater)

( ) Cost/Benefit Analysis attached

Evaluation performed by: E Wass Date: 2-20-85

Checked by: R Van Ostrom Date: 2-20-85

Disposition of Tank:

(✓) Tank Interim Stabilized at 600 gallons of supernatant liquid

( ) Tank not Interim Stabilized; stabilization activities resumed

Approved by: RAV [illegible] 2/21/85
Manager, TF&EPC Date

[illegible] 2-21-85
Manager, TFS&O Date

[illegible] 2-21-85
Program Manager Date

DISTRIBUTION: TF&EPC Tank File, Tank Farm Surveillance Analysis, Approval Signatures

6

STABILIZATION EVALUATION FORM

Tank: BXR-011

Evaluation (see continuation page for calculations and additional comments):

(X) Tank history review completed

(X) Tank composition data reviewed

Tank Description: TANK USED FOR URANIUM RECOVERY FOR GEOMETRY OF TANK SEE ATTACHED SHEET

Solids Cevel: 36.00 Date: 4-84 Method: DOUGHNUT

Liquid Level: 36.50 Date: 4-84 Method: MANUAL TAPE

Estimated Supernatant Volume (gal): 98 GAL

Interim Stabilization Criteria: LESS THAN 400 GALS SUPERNATANT.
(400 gallons or the volume of four inches of supernatant, whichever is greater)

( ) Cost/Benefit Analysis attached

Evaluation performed by: [illegible] Date: 2-20-85

Checked by: [illegible] Date: 2-20-85

Disposition of Tank:

(X) Tank Interim Stabilized at 98 gallons of supernatant liquid

( ) Tank not Interim Stabilized; stabilization activities resumed

Approved by: [illegible] 2/21/85
Manager, TF&EPC Date

[illegible] 2-21-85
Manager, TFS&Q Date

[illegible] 2-21-85
Program Manager Date

DISTRIBUTION: TF&EPC Tank File, Tank Farm Surveillance Analysis, Approval Signatures

7

EVALUATION CALCULATIONS AND COMMENTS

Tank: BXR-011

Tank Geometry:

TOP OF RISER TO BOTTOM OF TANK 43'6"
TOP OF RISER TO BOTTOM OF SUMP 45'-2 1/2"

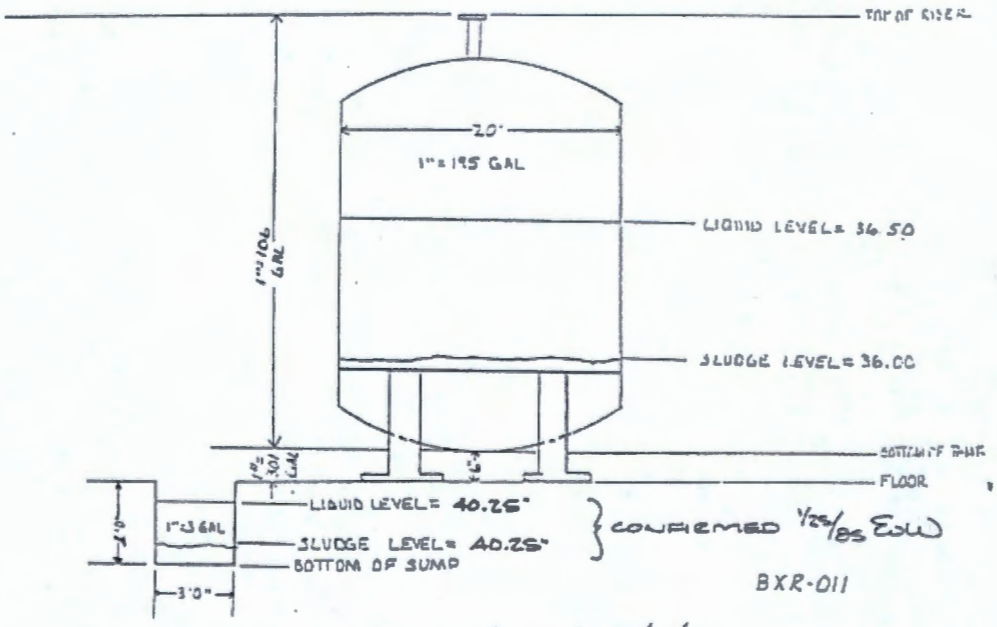

Calculations made by: D.W. Fukumoto 4/2/84

Checked by: [illegible] 4/10/84

REF DWG # H-2-41088

6

STABILIZATION EVALUATION FORM

Tank: BXR-011 SUMP

Evaluation (see continuation page for calculations and additional comments):

(x) Tank history review completed

(x) Tank composition data reviewed

Tank Description: CELL SUMP

(SOFT SLUDGE)
Solids Level: 40.25 Date: 1-24-85 Method: ZIP CORD

Liquid Level: 40.25 Date: 1-24-85 Method: ZIP CORD

Estimated Supernatant Volume (gal): —

Interim Stabilization Criteria: <400 GAL
(400 gallons or the volume of four inches of supernatant, whichever is greater)

( ) Cost/Benefit Analysis attached

Evaluation performed by: EWEISS Date: 2-20-85

Checked by: RA Van Meter Date: 2-20-85

Disposition of Tank:

(x) Tank Interim Stabilized at Ø gallons of supernatant liquid

( ) Tank not Interim Stabilized; stabilization activities resumed

Approved by: RA Fulton — Manager, TF&EPC — 2/20/85 Date

[illegible] — Manager, TFS&O — 2-21-85 Date

[illegible] — Program Manager — 2-21-85 Date

DISTRIBUTION: TF&EPC Tank File, Tank Farm Surveillance Analysis, Approval Signatures

3.45 244-CR VAULT / TK-CR-001

PCSACS Level Reading = 34.41-in
PCSACS Level Reading Date = 2014-02-25

Calibration Table: RPP-CALC-24219 Rev. 0, *244-CR Vault Tank and Cell Volume Calculations*, Table 1

Sludge volume from RPP-RPT-24257 Rev. 0, *244-CR Vault Liquid Level Assessment and Video Inspection Completion Report*, Table 4-1.

34.25-in = 3606 gallons
34.50-in = 3653 gallons

$$\text{PCSACS Level Reading} = 34.41 - in$$
$$= 3606\ gallons$$
$$+ (34.41 - 34.25)/(34.50 - 34.25)\ x\ (3653 - 3606\ gallons)$$
$$Waste\ Volume = 3636\ gallons$$
$$Waste\ Volume = 3636\ gallons/(1000\ gallons/kilogallon)$$
$$Waste\ Volume = 3.6\ kilogallons$$

$Sludge\ Volume = 443\ gallons$ (from RPP-RPT-24257 Rev. 0)

$$Liquid\ Volume = Waste\ Volume - Solids\ Volume$$
$$Liquid\ Volume = 3636\ gallons - 443\ gallons$$
$$Liquid\ Volume = 3193\ gallons$$

244-CR Vault / TK-CR-001 Calibration Table

RPP-CALC-24219, Rev. 0 **Page** 18 **of** 25

Title: 244-CR Vault Tank and Cell Volume Calculations **Identifier:** P-06-18 **Rev:** 0

Originator: AB Carlson **Date:** 1/10/05

Checker: MM Durst **Date:** 1/10/05

Organizational Manager: MJ Sutey **Date:** 1/18/05

Table 1. Volume as a Function of Liquid Level for Tanks TK-CR-001 and TK-CR-011 (2 pages)

Ht. (in.)	Vol. (gal)	Ht. (in.)	Vol. (gal)	Ht. (in.)	Vol. (gal)	Ht. (in.)	Vol. (gal)	Ht. (in.)	Vol. (gal)	Ht. (in.)	Vol. (gal)	Ht. (in.)	Vol. (gal)	Ht. (in.)	Vol. (gal)
0	0	14.5	672	28.75	2590	43	5309	57.5	8148	72	10988	86.5	13828	101	16667
0.25	0.2	14.75	696	29	2634	43.25	5358	57.75	8197	72.25	11037	86.75	13877	101.25	16716
0.5	0.8	15	719	29.25	2678	43.5	5407	58	8246	72.5	11086	87	13926	101.5	16765
0.75	1.8	15.25	743	29.5	2723	43.75	5456	58.25	8295	72.75	11135	87.25	13975	101.75	16814
1	3.3	15.5	767	29.75	2768	44	5505	58.5	8344	73	11184	87.5	14024	102	16863
1.25	5.1	15.75	792	30	2813	44.25	5554	58.75	8393	73.25	11233	87.75	14073	102.25	16912
1.5	7.3	16	817	30.25	2858	44.5	5603	59	8442	73.5	11282	88	14122	102.5	16961
1.75	10	16.25	842	30.5	2904	44.75	5651	59.25	8491	73.75	11331	88.25	14170	102.75	17010
2	13	16.5	868	30.75	2949	45	5700	59.5	8540	74	11380	88.5	14219	103	17059
2.25	16	16.75	894	31	2995	45.25	5749	59.75	8589	74.25	11429	88.75	14268	103.25	17108
2.5	20	17	921	31.25	3041	45.5	5798	60	8638	74.5	11478	89	14317	103.5	17157
2.75	25	17.25	948	31.5	3088	45.75	5847	60.25	8687	74.75	11527	89.25	14366	103.75	17206
3	29	17.5	975	31.75	3134	46	5896	60.5	8736	75	11576	89.5	14415	104	17255
3.25	34	17.75	1003	32	3181	46.25	5945	60.75	8785	75.25	11625	89.75	14464	104.25	17304
3.5	40	18	1031	32.25	3227	46.5	5994	61	8834	75.5	11674	90	14513	104.5	17353
3.75	46	18.25	1060	32.5	3274	46.75	6043	61.25	8883	75.75	11722	90.25	14562	104.75	17402
4	52	18.5	1088	32.75	3321	47	6092	61.5	8932	76	11771	90.5	14611	105	17451
4.25	59	18.75	1118	33	3368	47.25	6141	61.75	8981	76.25	11820	90.75	14660	105.25	17500
4.5	66	19	1147	33.25	3415	47.5	6190	62	9030	76.5	11869	91	14709	105.5	17549
4.75	73	19.25	1177	33.5	3463	47.75	6239	62.25	9079	76.75	11918	91.25	14758	105.75	17598
5	81	19.5	1208	33.75	3510	48	6288	62.5	9128	77	11967	91.5	14807	106	17647
5.25	89	19.75	1238	34	3558	48.25	6337	62.75	9177	77.25	12016	91.75	14856	106.25	17696
5.5	98	20	1269	34.25	3606	48.5	6386	63	9226	77.5	12065	92	14905	106.5	17745
5.75	107	20.25	1301	34.5	3653	48.75	6435	63.25	9274	77.75	12114	92.25	14954	106.75	17794
6	117	20.5	1333	34.75	3701	49	6484	63.5	9323	78	12163	92.5	15003	107	17842
6.25	126	20.75	1365	35	3749	49.25	6533	63.75	9372	78.25	12212	92.75	15052	107.25	17891
6.5	137	21	1397	35.25	3797	49.5	6582	64	9421	78.5	12261	93	15101	107.5	17940
6.75	147	21.25	1430	35.5	3845	49.75	6631	64.25	9470	78.75	12310	93.25	15150	107.75	17989
7	158	21.5	1464	35.75	3894	50	6680	64.5	9519	79	12359	93.5	15199	108	18038
7.25	170	21.75	1497	36	3942	50.25	6729	64.75	9568	79.25	12408	93.75	15248	108.25	18087
7.5	182	22	1532	36.25	3990	50.5	6778	65	9617	79.5	12457	94	15297	108.5	18136
7.75	194	22.25	1566	36.5	4039	50.75	6826	65.25	9666	79.75	12506	94.25	15346	108.75	18185
8	207	22.5	1601	36.75	4087	51	6875	65.5	9715	80	12555	94.5	15394	109	18234
8.25	220	22.75	1636	37	4136	51.25	6924	65.75	9764	80.25	12604	94.75	15443	109.25	18283
8.5	233	23	1671	37.25	4184	51.5	6973	66	9813	80.5	12653	95	15492	109.5	18332
8.75	247	23.25	1707	37.5	4233	51.75	7022	66.25	9862	80.75	12702	95.25	15541	109.75	18381
9	261	23.5	1744	37.75	4282	52	7071	66.5	9911	81	12751	95.5	15590	110	18430
9.25	276	23.75	1780	38	4330	52.25	7120	66.75	9960	81.25	12800	95.75	15639	110.25	18479
9.5	291	24	1817	38.25	4379	52.5	7169	67	10009	81.5	12849	96	15688	110.5	18528
9.75	306	24.25	1855	38.5	4428	52.75	7218	67.25	10058	81.75	12898	96.25	15737	110.75	18577
10	322	24.5	1893	38.75	4477	53	7267	67.5	10107	82	12946	96.5	15786	111	18626
10.25	338	24.75	1931	39	4526	53.25	7316	67.75	10156	82.25	12995	96.75	15835	111.25	18675
10.5	355	25	1969	39.25	4574	53.5	7365	68	10205	82.5	13044	97	15884	111.5	18724
10.75	372	25.25	2008	39.5	4623	53.75	7414	68.25	10254	82.75	13093	97.25	15933	111.75	18773
11	389	25.5	2047	39.75	4672	54	7463	68.5	10303	83	13142	97.5	15982	112	18822
11.25	407	25.75	2087	40	4721	54.25	7512	68.75	10352	83.25	13191	97.75	16031	112.25	18871
11.5	425	26	2127	40.25	4770	54.5	7561	69	10401	83.5	13240	98	16080	112.5	18920
11.75	443	26.25	2167	40.5	4819	54.75	7610	69.25	10450	83.75	13289	98.25	16129	112.75	18969
12	462	26.5	2208	40.70*	4859	55	7659	69.5	10498	84	13338	98.5	16178	113	19018
12.25	481	26.75	2249	40.75	4868	55.25	7708	69.75	10547	84.25	13387	98.75	16227	113.25	19066
12.5	501	27	2290	41	4917	55.5	7757	70	10596	84.5	13436	99	16276	113.5	19115
12.75	521	27.25	2332	41.25	4966	55.75	7806	70.25	10645	84.75	13485	99.25	16325	113.75	19164
13	542	27.5	2374	41.5	5015	56	7855	70.5	10694	85	13534	99.5	16374	114	19213
13.25	562	27.75	2417	41.75	5064	56.25	7904	70.75	10743	85.25	13583	99.75	16423	114.25	19262
13.5	584	27.89*	2440	42	5113	56.5	7953	71	10792	85.5	13632	100	16472	114.5	19311
13.75	605	28	2459	42.25	5162	56.75	8002	71.25	10841	85.75	13681	100.25	16521	114.75	19360
14	627	28.25	2503	42.5	5211	57	8050	71.5	10890	86	13730	100.5	16570	115	19409
14.25	650	28.5	2546	42.75	5260	57.25	8099	71.75	10939	86.25	13779	100.75	16618	115.25	19458

RPP-CALC-24219, Rev. 0 **Page** 19 **of** 25

Title: 244-CR Vault Tank and Cell Volume Calculations **Identifier:** P-06-18 Rev: 0

Originator: AB Carlson **Date:** 1/10/05

Checker: MM Durst **Date:** 1/10/05

Organizational Manager: MJ Sutey **Date:** 1/13/05

Table 1. Volume as a Function of Liquid Level for Tanks TK-CR-001 and TK-CR-011 (2 pages)

Ht. (in.)	Vol. (gal)	Ht. (in.)	Vol. (gal)	Ht. (in.)	Vol. (gal)	Ht. (in.)	Vol. (gal)	Ht. (in.)	Vol. (gal)	Ht. (in.)	Vol. (gal)	Ht. (in.)	Vol. (gal)	Ht. (in.)	Vol. (gal)
115.5	19507	128.75	22102	142	24697	155.25	27292	168.5	29887	181.75	32481	195	35076	208.25	37671
115.75	19556	129	22151	142.25	24746	155.5	27341	168.75	29936	182	32530	195.25	35125	208.5	37720
116	19605	129.25	22200	142.5	24795	155.75	27390	169	29985	182.25	32579	195.5	35174	208.75	37769
116.25	19654	129.5	22249	142.75	24844	156	27439	169.25	30033	182.5	32628	195.75	35223	209	37818
116.5	19703	129.75	22298	143	24893	156.25	27488	169.5	30082	182.75	32677	196	35272	209.25	37867
116.75	19752	130	22347	143.25	24942	156.5	27537	169.75	30131	183	32726	196.25	35321	209.5	37916
117	19801	130.25	22396	143.5	24991	156.75	27585	170	30180	183.25	32775	196.5	35370	209.75	37965
117.25	19850	130.5	22445	143.75	25040	157	27634	170.25	30229	183.5	32824	196.75	35419	210	38014
117.5	19899	130.75	22494	144	25089	157.25	27683	170.5	30278	183.75	32873	197	35468	210.25	38063
117.75	19948	131	22543	144.25	25137	157.5	27732	170.75	30327	184	32922	197.25	35517	210.5	38112
118	19997	131.25	22592	144.5	25186	157.75	27781	171	30376	184.25	32971	197.5	35566	210.75	38161
118.25	20046	131.5	22641	144.75	25235	158	27830	171.25	30425	184.5	33020	197.75	35615	211	38210
118.5	20095	131.75	22689	145	25284	158.25	27879	171.5	30474	184.75	33069	198	35664	211.25	38259
118.75	20144	132	22738	145.25	25333	158.5	27928	171.75	30523	185	33118	198.25	35713	211.5	38308
119	20193	132.25	22787	145.5	25382	158.75	27977	172	30572	185.25	33167	198.5	35762	211.75	38357
119.25	20242	132.5	22836	145.75	25431	159	28026	172.25	30621	185.5	33216	198.75	35811	212	38406
119.5	20290	132.75	22885	146	25480	159.25	28075	172.5	30670	185.75	33265	199	35860	212.25	38455
119.75	20339	133	22934	146.25	25529	159.5	28124	172.75	30719	186	33314	199.25	35909	212.5	38504
120	20388	133.25	22983	146.5	25578	159.75	28173	173	30768	186.25	33363	199.5	35958	212.75	38553
120.25	20437	133.5	23032	146.75	25627	160	28222	173.25	30817	186.5	33412	199.75	36007	213	38601
120.5	20486	133.75	23081	147	25676	160.25	28271	173.5	30866	186.75	33461	200	36056	213.25	38650
120.75	20535	134	23130	147.25	25725	160.5	28320	173.75	30915	187	33510	200.25	36105	213.5	38699
121	20584	134.25	23179	147.5	25774	160.75	28369	174	30964	187.25	33559	200.5	36153	213.75	38748
121.25	20633	134.5	23228	147.75	25823	161	28418	174.25	31013	187.5	33608	200.75	36202	214	38797
121.5	20682	134.75	23277	148	25872	161.25	28467	174.5	31062	187.75	33657	201	36251	214.25	38846
121.75	20731	135	23326	148.25	25921	161.5	28516	174.75	31111	188	33705	201.25	36300	214.5	38895
122	20780	135.25	23375	148.5	25970	161.75	28565	175	31160	188.25	33754	201.5	36349	214.75	38944
122.25	20829	135.5	23424	148.75	26019	162	28614	175.25	31209	188.5	33803	201.75	36398	215	38993
122.5	20878	135.75	23473	149	26068	162.25	28663	175.5	31257	188.75	33852	202	36447	215.25	39042
122.75	20927	136	23522	149.25	26117	162.5	28712	175.75	31306	189	33901	202.25	36496	215.5	39091
123	20976	136.25	23571	149.5	26166	162.75	28761	176	31355	189.25	33950	202.5	36545	215.75	39140
123.25	21025	136.5	23620	149.75	26215	163	28809	176.25	31404	189.5	33999	202.75	36594	216	39189
123.5	21074	136.75	23669	150	26264	163.25	28858	176.5	31453	189.75	34048	203	36643	216.25	39238
123.75	21123	137	23718	150.25	26313	163.5	28907	176.75	31502	190	34097	203.25	36692	216.5	39287
124	21172	137.25	23767	150.5	26361	163.75	28956	177	31551	190.25	34146	203.5	36741	216.75	39336
124.25	21221	137.5	23816	150.75	26410	164	29005	177.25	31600	190.5	34195	203.75	36790	217	39385
124.5	21270	137.75	23865	151	26459	164.25	29054	177.5	31649	190.75	34244	204	36839	217.25	39434
124.75	21319	138	23913	151.25	26508	164.5	29103	177.75	31698	191	34293	204.25	36888	217.5	39483
125	21368	138.25	23962	151.5	26557	164.75	29152	178	31747	191.25	34342	204.5	36937	217.75	39532
125.25	21417	138.5	24011	151.75	26606	165	29201	178.25	31796	191.5	34391	204.75	36986	218	39581
125.5	21466	138.75	24060	152	26655	165.25	29250	178.5	31845	191.75	34440	205	37035	218.25	39630
125.75	21514	139	24109	152.25	26704	165.5	29299	178.75	31894	192	34489	205.25	37084	218.5	39679
126	21563	139.25	24158	152.5	26753	165.75	29348	179	31943	192.25	34538	205.5	37133	218.75	39728
126.25	21612	139.5	24207	152.75	26802	166	29397	179.25	31992	192.5	34587	205.75	37182	219	39776
126.5	21661	139.75	24256	153	26851	166.25	29446	179.5	32041	192.75	34636	206	37231	219.25	39825
126.75	21710	140	24305	153.25	26900	166.5	29495	179.75	32090	193	34685	206.25	37280	219.5	39874
127	21759	140.25	24354	153.5	26949	166.75	29544	180	32139	193.25	34734	206.5	37329	219.75	39923
127.25	21808	140.5	24403	153.75	26998	167	29593	180.25	32188	193.5	34783	206.75	37377	220	39972
127.5	21857	140.75	24452	154	27047	167.25	29642	180.5	32237	193.75	34832	207	37426	220.25	40021
127.75	21906	141	24501	154.25	27096	167.5	29691	180.75	32286	194	34881	207.25	37475	220.5	40070
128	21955	141.25	24550	154.5	27145	167.75	29740	181	32335	194.25	34929	207.5	37524	220.70^	40110
128.25	22004	141.5	24599	154.75	27194	168	29789	181.25	32384	194.5	34978	207.75	37573		
128.5	22053	141.75	24648	155	27243	168.25	29838	181.5	32433	194.75	35027	208	37622		

Footnotes:

* Transition from flange dish to knuckle dish

" Transition from knuckle dish to straight section of tank

^ Maximum fill height of tank

3.46 244-CR VAULT / SUMP-CR-001

Waste volume from RPP-RPT-45845, Rev. 0, *Completion of Pumpable Removal from 244-CR Vault* transmitted to DOE-ORP with letter WRPS-1000848, *Contract Number DE-AC27-08RV14800 – Washington River Protection Solutions LLC Completion of Performance Based Incentive Fee 1.5.1, Remove Liquids from the Secondary Containment of the 244-CR Vault – Request for Incremental Fee Approval*, dated April 28, 2010.

Transfer of waste from Sump-CR-001 was completed March 3, 2010 (RPP-RPT-45845, Page 2) leaving an estimated 6-in waste heel in the sump determined visually (RPP-RPT-45845, Page 4).

$Waste\ Volume = 22\ gallons$ (from WRPS-1000848)
$Waste\ Volume = 22\ gallons/(1000\ gallons/kilogallon)$
$Waste\ Volume =< 0.10\ kilogallons$

$Sludge\ Volume = 0\ gallons$

$Liquid\ Volume = Waste\ Volume - Solids\ Volume$
$Liquid\ Volume = 22\ gallons - 0\ gallons$
$Liquid\ Volume = 22\ gallons$

244-CR Vault / Sump-CR-001 Calibration Table

RPP-CALC-24219, Rev. 0 **Page** 22 **of** 25

Title: 244-CR Vault Tank and Cell Volume Calculations **Identifier:** P-06-18 Rev: 0

Originator: AB Carlson **Date:** 1/10/05

Checker: MM Durst **Date:** 1/10/05

Organizational Manager: MJ Sutey **Date:** 1/13/05

Table 3. Volume as a Function of Liquid Level for Cell CR-001
(As Measured from the Bottom of the Sump)

Ht. (in.)	Vol. (gal)	Ht. (in.)	Vol. (gal)	Ht. (in.)	Vol. (gal)	Ht. (in.)	Vol. (gal)	Ht. (in.)	Vol. (gal)	Ht. (in.)	Vol. (gal)
0	0	11.25	42	22.25	3138	33.5	6693	44.75	9462	56	11529
0.25	0.9	11.5	43	22.5	3226	33.75	6763	45	9515	56.25	11570
0.5	1.9	11.75	44	22.75	3313	34	6833	45.25	9568	56.5	11611
0.75	2.8	12*	45	23	3400	34.25	6902	45.5	9620	56.75	11652
1	3.7	12.25	47	23.25	3487	34.5	6971	45.75	9672	57	11693
1.25	4.7	12.5	52	23.5	3573	34.75	7039	46	9723	57.25	11734
1.5	5.6	12.75	62	23.75	3659	35	7107	46.25	9774	57.5	11775
1.75	6.5	13	77	24	3744	35.25	7175	46.5	9825	57.75	11816
2	7.5	13.25	100	24.25	3829	35.5	7242	46.75	9875	58	11856
2.25	8.4	13.5	132	24.5	3914	35.75	7309	47	9925	58.25	11897
2.5	9.4	13.75	174	24.75	3998	36	7375	47.25	9975	58.5	11937
2.75	10	14	228	25	4081	36.25	7441	47.5	10024	58.75	11978
3	11	14.25	294	25.25	4165	36.5	7507	47.75	10073	59	12018
3.25	12	14.5#	376	25.5	4248	36.75	7572	48	10121	59.25	12059
3.5	13	14.75	465	25.75	4330	37	7637	48.25	10170	59.5	12099
3.75	14	15	554	26	4413	37.25	7702	48.5	10217	59.75	12139
4	15	15.25	643	26.25	4494	37.5	7766	48.75	10265	60	12179
4.25	16	15.5	732	26.5	4576	37.75	7830	49	10312	60.25	12220
4.5	17	15.75	822	26.75	4657	38	7893	49.25	10359	60.5	12260
4.75	18	16	911	27	4737	38.25	7956	49.5	10405	60.75	12300
5	19	16.25	1000	27.25	4817	38.5	8019	49.75	10451	61	12340
5.25	20	16.5	1089	27.5	4897	38.75	8081	50	10497	61.25	12380
5.5	21	16.75	1178	27.75	4977	39	8143	50.25	10542	61.5	12420
5.75	22	17	1267	28	5056	39.25	8204	50.5	10587	61.75	12460
6	22	17.25	1356	28.25	5134	39.5	8265	50.75	10632	62	12500
6.25	23	17.5	1446	28.5	5212	39.75	8326	51	10676	62.25	12541
6.5	24	17.75	1535	28.75	5290	40	8387	51.25	10721	62.5**	12581
6.75	25	18	1624	29	5367	40.25	8446	51.5	10765	62.75	12621
7	26	18.25	1713	29.25	5444	40.5	8506	51.75	10809	63	12661
7.25	27	18.5	1802	29.5	5521	40.75	8565	52	10852	63.25	12701
7.5	28	18.75	1891	29.75	5597	41	8624	52.25	10896	63.5	12741
7.75	29	19	1980	30	5673	41.25	8683	52.5	10939	63.75	12781
8	30	19.25	2070	30.25	5748	41.5	8741	52.75	10982	64	12821
8.25	31	19.5	2159	30.5	5823	41.75	8799	53	11025	64.25	12861
8.5	32	19.75	2248	30.75	5898	42	8856	53.25	11068	64.5	12901
8.75	33	20	2337	31	5972	42.25	8913	53.5	11110	64.75	12941
9	34	20.25	2426	31.25	6046	42.5	8970	53.75	11153	65	12981
9.25	35	20.5	2515	31.5	6120	42.75	9026	54	11195	65.25	13021
9.5	36	20.75	2604	31.75	6193	43	9082	54.25	11237	65.5	13061
9.75	36	21	2694	32	6265	43.25	9137	54.5	11279	65.75	13101
10	37	21.25	2783	32.25	6338	43.5	9192	54.75	11321	66	13141
10.25	38	21.5	2872	32.5	6409	43.75	9247	55	11363		
10.5	39	21.57^	2896	32.75	6481	44	9301	55.25	11404		
10.75	40	21.75	2961	33	6552	44.25	9355	55.5	11446		
11	41	22	3049	33.25	6623	44.5	9409	55.75	11487		

Footnotes:

* Top of Sump/Low Point of Floor

\# High Point of Floor

^ Bottom of tank TK-CR-001

** Transition between tank dished head and straight side of tank

3.47 244-CR VAULT / TK-CR-002

Waste volumes from RPP-RPT-24257 Rev. 0, *244-CR Vault Liquid Level Assessment and Video Inspection Completion Report*, Table 4-1. Waste level was determined November 29, 2004 (Work Order 2W-03-01160/S *244-CR-002, Install Zip Cord & Sludge Weight*).

$$Waste\ Volume = 753\ gallons$$

$$Waste\ Volume = 753\ gallons/(1000\ gallons/kilogallon)$$
$$Waste\ Volume = 0.75\ kilogallons$$

$$Sludge\ Volume = 483\ gallons$$

$$Liquid\ Volume = Waste\ Volume - Solids\ Volume$$
$$Liquid\ Volume = 753\ gallons - 483\ gallons$$
$$Liquid\ Volume = 270\ gallons$$

244-CR Vault / TK-CR-002 Calibration Table

RPP-CALC-24219, Rev. 0 **Page** 20 **of** 25

Title: 244-CR Vault Tank and Cell Volume Calculations **Identifier:** P-06-18 **Rev:** 0

Originator: AB Carlson **Date:** 1/10/05

Checker: MM Durst **Date:** 1/10/05

Organizational Manager: MJ Sutey **Date:** 1/13/05

Table 2. Volume as a Function of Liquid Level for Tanks TK-CR-002 and TK-CR-003 (2 pages)

Ht. (in.)	Vol. (gal)	Ht. (in.)	Vol. (gal)	Ht. (in.)	Vol. (gal)	Ht. (in.)	Vol. (gal)	Ht. (in.)	Vol. (gal)	Ht. (in.)	Vol. (gal)
0	0	10.5	247	20.5	915	30.75	1845	41.25	2819	51.75	3794
0.25	0.1	10.75	258	20.75	936	31	1868	41.5	2843	52	3817
0.5	0.6	11	270	21	957	31.25	1891	41.75	2866	52.25	3840
0.75	1.3	11.25	283	21.25	979	31.5	1914	42	2889	52.5	3863
1	2.3	11.5	295	21.5	1000	31.75	1938	42.25	2912	52.75	3887
1.25	3.6	11.75	308	21.75	1022	32	1961	42.5	2935	53	3910
1.5	5.1	12	321	22	1044	32.25	1984	42.75	2959	53.25	3933
1.75	7.0	12.25	335	22.25	1066	32.5	2007	43	2982	53.5	3956
2	9.1	12.5	348	22.5	1088	32.75	2030	43.25	3005	53.75	3979
2.25	12	12.75	362	22.75	1110	33	2054	43.5	3028	54	4003
2.5	14	13	376	23	1132	33.25	2077	43.75	3051	54.25	4026
2.75	17	13.25	391	23.25	1154	33.5	2100	44	3075	54.5	4049
3	20	13.5	405	23.5	1177	33.75	2123	44.25	3098	54.75	4072
3.25	24	13.75	420	23.75	1199	34	2146	44.5	3121	55	4096
3.5	28	14	435	24	1222	34.25	2170	44.75	3144	55.25	4119
3.75	32	14.25	451	24.25	1244	34.5	2193	45	3167	55.5	4142
4	36	14.5	467	24.5	1267	34.75	2216	45.25	3191	55.75	4165
4.25	41	14.75	483	24.75	1290	35	2239	45.5	3214	56	4188
4.5	46	15	499	25	1313	35.25	2262	45.75	3237	56.25	4212
4.75	51	15.25	515	25.25	1336	35.5	2286	46	3260	56.5	4235
5	57	15.5	532	25.5	1359	35.75	2309	46.25	3283	56.75	4258
5.25	62	15.75	549	25.75	1382	36	2332	46.5	3307	57	4281
5.5	68	16	566	26	1405	36.25	2355	46.75	3330	57.25	4304
5.75	75	16.25	584	26.25	1428	36.5	2378	47	3353	57.5	4328
6	81	16.5	602	26.5	1451	36.75	2402	47.25	3376	57.75	4351
6.25	88	16.75	620	26.75	1474	37	2425	47.5	3399	58	4374
6.5	95	17	638	27	1497	37.25	2448	47.75	3423	58.25	4397
6.75	103	17.25	657	27.25	1520	37.5	2471	48	3446	58.5	4420
7	110	17.5	675	27.5	1543	37.75	2495	48.25	3469	58.75	4444
7.25	118	17.75	695	27.75	1566	38	2518	48.5	3492	59	4467
7.5	127	18	714	28	1590	38.25	2541	48.75	3515	59.25	4490
7.75	135	18.25	733	28.25	1613	38.5	2564	49	3539	59.5	4513
8	144	18.5	753	**28.48^**	1634	38.75	2587	49.25	3562	59.75	4536
8.25	153	**18.53***	755	28.5	1636	39	2611	49.5	3585	60	4560
8.5	162	18.75	773	28.75	1659	39.25	2634	49.75	3608	60.25	4583
8.75	172	19	792	29	1682	39.5	2657	50	3631	60.5	4606
9	182	19.25	812	29.25	1706	39.75	2680	50.25	3655	60.75	4629
9.25	192	19.5	832	29.5	1729	40	2703	50.5	3678	61	4652
9.5	202	**19.53#**	834	29.75	1752	40.25	2727	50.75	3701	61.25	4676
9.75	213	19.75	852	30	1775	40.5	2750	51	3724	61.5	4699
10	224	20	873	30.25	1798	40.75	2773	51.25	3747	61.75	4722
10.25	235	20.25	894	30.5	1822	41	2796	51.5	3771	62	4745

Table 2. Volume as a Function of Liquid Level for Tanks TK-CR-002 and TK-CR-003 (2 pages)

Ht. (in.)	Vol. (gal)	Ht. (in.)	Vol. (gal)	Ht. (in.)	Vol. (gal)	Ht. (in.)	Vol. (gal)	Ht. (in.)	Vol. (gal)	Ht. (in.)	Vol. (gal)
62.25	4768	71.5	5633	81	6545	90.5	7457	100	8368	109.5	9280
62.5	4792	71.75	5657	81.25	6569	90.75	7481	100.25	8392	109.75	9304
62.75	4815	72	5681	81.5	6593	91	7505	100.5	8416	110	9328
63	4838	72.25	5705	81.75	6617	91.25	7528	100.75	8440	110.25	9352
63.25	4861	72.5	5729	82	6641	91.5	7552	101	8464	110.5	9376
63.5	4884	72.75	5753	82.25	6665	91.75	7576	101.25	8488	110.75	9400
63.75	4908	73	5777	82.5	6689	92	7600	101.5	8512	111	9424
64	4931	73.25	5801	82.75	6713	92.25	7624	101.75	8536	111.25	9448
64.25	4954	73.5	5825	83	6737	92.5	7648	102	8560	111.5	9472
64.5	4977	73.75	5849	83.25	6761	92.75	7672	102.25	8584	111.75	9496
64.75	5000	74	5873	83.5	6785	93	7696	102.5	8608	112	9520
65	5024	74.25	5897	83.75	6809	93.25	7720	102.75	8632	112.25	9544
65.25	5047	74.5	5921	84	6833	93.5	7744	103	8656	112.5	9568
65.5	5070	74.75	5945	84.25	6857	93.75	7768	103.25	8680	112.75	9592
65.75	5093	75	5969	84.5	6881	94	7792	103.5	8704	113	9616
66	5116	75.25	5993	84.75	6905	94.25	7816	103.75	8728	113.25	9640
66.25	5140	75.5	6017	85	6929	94.5	7840	104	8752	113.5	9664
66.5	5163	75.75	6041	85.25	6953	94.75	7864	104.25	8776	113.75	9688
66.75	5186	76	6065	85.5	6977	95	7888	104.5	8800	114	9712
67	5209	76.25	6089	85.75	7001	95.25	7912	104.75	8824	114.25	9736
67.25	5232	76.5	6113	86	7025	95.5	7936	105	8848	114.5	9760
67.5	5256	76.75	6137	86.25	7049	95.75	7960	105.25	8872	114.75	9784
67.75	5279	77	6161	86.5	7073	96	7984	105.5	8896	115	9808
68	5302	77.25	6185	86.75	7097	96.25	8008	105.75	8920	115.25	9832
68.25	5325	77.5	6209	87	7121	96.5	8032	106	8944	115.5	9856
68.5	5348	77.75	6233	87.25	7145	96.75	8056	106.25	8968	115.75	9880
68.75	5372	78	6257	87.5	7169	97	8080	106.5	8992	116	9904
69	5395	78.25	6281	87.75	7193	97.25	8104	106.75	9016	116.25	9928
69.25	5418	78.5	6305	88	7217	97.5	8128	107	9040	116.5	9952
69.48**	5439	78.75	6329	88.25	7241	97.75	8152	107.25	9064	116.75	9976
69.5	5441	79	6353	88.5	7265	98	8176	107.5	9088	117	10000
69.75	5465	79.25	6377	88.75	7289	98.25	8200	107.75	9112	117.25	10023
70	5489	79.5	6401	89	7313	98.5	8224	108	9136	117.5	10047
70.25	5513	79.75	6425	89.25	7337	98.75	8248	108.25	9160	117.75	10071
70.5	5537	80	6449	89.5	7361	99	8272	108.5	9184	118	10095
70.75	5561	80.25	6473	89.75	7385	99.25	8296	108.75	9208	118.25	10119
71	5585	80.5	6497	90	7409	99.5	8320	109	9232	**118.48@**	10141
71.25	5609	80.75	6521	90.25	7433	99.75	8344	109.25	9256		

Footnotes:

- * Bottom of coil
- # Transition from flange dish to knuckle dish
- ^ Transition from knuckle dish to straight section of tank
- ** Top of coil
- @ Maximum fill height of tank

3.48 244-CR VAULT / SUMP-CR-002

Volumes from RPP-RPT-45845, Rev. 0, *Completion of Pumpable Removal from 244-CR Vault* transmitted to DOE-ORP with letter WRPS-1000848, *Contract Number DE-AC27-08RV14800 – Washington River Protection Solutions LLC Completion of Performance Based Incentive Fee 1.5.1, Remove Liquids from the Secondary Containment of the 244-CR Vault – Request for Incremental Fee Approval*, dated April 28, 2010.

Transfer of waste from Sump-CR-002 was completed March 9, 2010 (RPP-RPT-45845, Page 2) leaving an estimated 3-in waste heel in the sump determined visually (RPP-RPT-45845, Page 5).

$$Waste\ Volume = 11\ gallons$$
$$Waste\ Volume = 11\ gallons/(1000\ gallons/kilogallon)$$
$$Waste\ Volume = < 0.10\ kilogallons$$

$$Sludge\ Volume = 1\ gallon$$

$$Liquid\ Volume = Waste\ Volume - Solids\ Volume$$
$$Liquid\ Volume = 11\ gallons - 1\ gallon$$
$$Liquid\ Volume = 10\ gallons$$

244- CR Vault / Sump-CR-002 Calibration Table

RPP-CALC-24219, Rev. 0 **Page** 23 **of** 25

Title: 244-CR Vault Tank and Cell Volume Calculations **Identifier:** P-06-18 Rev: 0

Originator: AB Carlson **Date:** 1/10/05

Checker: MM Durst **Date:** 1/10/05

Organizational Manager: MJ Sutey **Date:** 1/12/05

Table 4. Volume as a Function of Liquid Level for Cells CR-002 and CR-003
(As Measured from the Bottom of the Sump)

Ht. (in.)	Vol. (gal)	Ht. (in.)	Vol. (gal)	Ht. (in.)	Vol. (gal)	Ht. (in.)	Vol. (gal)	Ht. (in.)	Vol. (gal)	Ht. (in.)	Vol. (gal)
0	0	11.25	42	22.5	1925	33.5	3879	44.75	5343	56	6518
0.25	0.9	11.5	43	22.75	1975	33.75	3917	45	5370	56.25	6544
0.5	1.9	11.75	44	23	2025	34	3955	45.25	5397	56.5	6570
0.75	2.8	12*	45	23.14^	2052	34.25	3992	45.5	5424	56.75	6596
1	3.7	12.25	47	23.25	2074	34.5	4030	45.75	5451	57	6622
1.25	4.7	12.5	52	23.5	2124	34.75	4067	46	5478	57.25	6647
1.5	5.6	12.75	62	23.75	2173	35	4104	46.25	5505	57.5	6673
1.75	6.5	13	78	24	2222	35.25	4141	46.5	5531	57.75	6699
2	7.5	13.25	102	24.25	2271	35.5	4177	46.75	5558	58	6725
2.25	8.4	13.5	135	24.5	2320	35.75	4213	47	5584	58.25	6751
2.5	9.4	13.75#	179	24.75	2368	36	4249	47.25	5611	58.5	6777
2.75	10	14	229	25	2416	36.25	4285	47.5	5637	58.75	6802
3	11	14.25	279	25.25	2463	36.5	4320	47.75	5664	59	6828
3.25	12	14.5	329	25.5	2511	36.75	4355	48	5690	59.25	6854
3.5	13	14.75	379	25.75	2558	37	4390	48.25	5716	59.5	6880
3.75	14	15	429	26	2604	37.25	4424	48.5	5742	59.75	6906
4	15	15.25	479	26.25	2651	37.5	4459	48.75	5768	60	6932
4.25	16	15.5	529	26.5	2697	37.75	4493	49	5794	60.25	6957
4.5	17	15.75	578	26.75	2743	38	4526	49.25	5820	60.5	6983
4.75	18	16	628	27	2789	38.25	4560	49.5	5846	60.75	7009
5	19	16.25	678	27.25	2834	38.5	4593	49.75	5872	61	7035
5.25	20	16.5	728	27.5	2879	38.75	4626	50	5898	61.25	7061
5.5	21	16.75	778	27.75	2924	39	4659	50.25	5924	61.5	7087
5.75	22	17	828	28	2968	39.25	4691	50.5	5950	61.75	7112
6	22	17.25	878	28.25	3013	39.5	4723	50.75	5976	62	7138
6.25	23	17.5	927	28.5	3057	39.75	4755	51	6002	62.25	7164
6.5	24	17.75	977	28.75	3100	40	4787	51.25	6028	62.5	7190
6.75	25	18	1027	29	3144	40.25	4818	51.5	6053	62.75	7216
7	26	18.25	1077	29.25	3187	40.5	4850	51.75**	6079	63	7241
7.25	27	18.5	1127	29.5	3230	40.75	4881	52	6105	63.25	7267
7.5	28	18.75	1177	29.75	3272	41	4911	52.25	6131	63.5	7293
7.75	29	19	1227	30	3315	41.25	4942	52.5	6157	63.75	7319
8	30	19.25	1277	30.25	3357	41.5	4972	52.75	6183	64	7345
8.25	31	19.5	1326	30.5	3399	41.75	5002	53	6208	64.25	7371
8.5	32	19.75	1376	30.75	3440	42	5031	53.25	6234	64.5	7396
8.75	33	20	1426	31	3481	42.25	5061	53.5	6260	64.75	7422
9	34	20.25	1476	31.25	3522	42.5	5090	53.75	6286	65	7448
9.25	35	20.5	1526	31.5	3563	42.75	5119	54	6312	65.25	7474
9.5	36	20.75	1576	31.75	3603	43	5147	54.25	6338	65.5	7500
9.75	36	21	1626	32	3643	43.25	5176	54.5	6363	65.75	7526
10	37	21.25	1676	32.25	3683	43.5	5204	54.75	6389	66	7551
10.25	38	21.5	1725	32.5	3723	43.75	5232	55	6415		
10.5	39	21.75	1775	32.75	3762	44	5260	55.25	6441		
10.75	40	22	1825	33	3801	44.25	5288	55.5	6467		
11	41	22.25	1875	33.25	3840	44.5	5315	55.75	6492		

Footnotes:

* Top of Sump/Low Point of Floor

\# High Point of Floor

^ Bottom of tank TK-CR-002 or TK-CR-003

** Transition between tank dished head and straight side of tank

3.49 244-CR VAULT / TK-CR-003

PCSACS Level Reading = 35.76-in
PCSACS Level Reading Date = 2014-02-25

Calibration Table: RPP-CALC-24219 Rev. 0, *244-CR Vault Tank and Cell Volume Calculations*, Table 2.

Sludge volume from RPP-RPT-24257, Rev. 0, *244-CR Vault Liquid Level Assessment and Video Inspection Completion Report*, Table 4-1.

35.75-in = 2309 gallons
36.00-in = 2332 gallons

$$\text{PCSACS Level Reading} = 35.76 - in$$
$$= 2309\ gallons$$
$$+\ (35.76 - 35.75)/36.00 - 35.75)\ x\ (2332 - 2309\ gallons)$$

$$Waste\ Volume = 2310\ gallons$$
$$Waste\ Volume = 2310\ gallons/(1000\ gallons/kilogallon)$$
$$Waste\ Volume = 2.3\ kilogallons$$

$Sludge\ Volume = 714\ gallons$ (from RPP-RPT-24257 Rev. 0)

$$Liquid\ Volume = Waste\ Volume - Solids\ Volume$$
$$Liquid\ Volume = 2310\ gallons - 714\ gallons$$
$$Liquid\ Volume = 1596\ gallons$$

244-CR / TK-CR-003 Calibration Table

RPP-CALC-24219, Rev. 0 Page 20 of 25

Title: 244-CR Vault Tank and Cell Volume Calculations **Identifier:** P-06-18 Rev: 0

Originator: AB Carlson **Date:** 1/10/05

Checker: MM Durst **Date:** 1/10/05

Organizational Manager: MJ Sutey **Date:** 1/13/05

Table 2. Volume as a Function of Liquid Level for Tanks TK-CR-002 and TK-CR-003 (2 pages)

Ht. (in.)	Vol. (gal)	Ht. (in.)	Vol. (gal)	Ht. (in.)	Vol. (gal)	Ht. (in.)	Vol. (gal)	Ht. (in.)	Vol. (gal)	Ht. (in.)	Vol. (gal)
0	0	10.5	247	20.5	915	30.75	1845	41.25	2819	51.75	3794
0.25	0.1	10.75	258	20.75	936	31	1868	41.5	2843	52	3817
0.5	0.6	11	270	21	957	31.25	1891	41.75	2866	52.25	3840
0.75	1.3	11.25	283	21.25	979	31.5	1914	42	2889	52.5	3863
1	2.3	11.5	295	21.5	1000	31.75	1938	42.25	2912	52.75	3887
1.25	3.6	11.75	308	21.75	1022	32	1961	42.5	2935	53	3910
1.5	5.1	12	321	22	1044	32.25	1984	42.75	2959	53.25	3933
1.75	7.0	12.25	335	22.25	1066	32.5	2007	43	2982	53.5	3956
2	9.1	12.5	348	22.5	1088	32.75	2030	43.25	3005	53.75	3979
2.25	12	12.75	362	22.75	1110	33	2054	43.5	3028	54	4003
2.5	14	13	376	23	1132	33.25	2077	43.75	3051	54.25	4026
2.75	17	13.25	391	23.25	1154	33.5	2100	44	3075	54.5	4049
3	20	13.5	405	23.5	1177	33.75	2123	44.25	3098	54.75	4072
3.25	24	13.75	420	23.75	1199	34	2146	44.5	3121	55	4096
3.5	28	14	435	24	1222	34.25	2170	44.75	3144	55.25	4119
3.75	32	14.25	451	24.25	1244	34.5	2193	45	3167	55.5	4142
4	36	14.5	467	24.5	1267	34.75	2216	45.25	3191	55.75	4165
4.25	41	14.75	483	24.75	1290	35	2239	45.5	3214	56	4188
4.5	46	15	499	25	1313	35.25	2262	45.75	3237	56.25	4212
4.75	51	15.25	515	25.25	1336	35.5	2286	46	3260	56.5	4235
5	57	15.5	532	25.5	1359	35.75	2309	46.25	3283	56.75	4258
5.25	62	15.75	549	25.75	1382	36	2332	46.5	3307	57	4281
5.5	68	16	566	26	1405	36.25	2355	46.75	3330	57.25	4304
5.75	75	16.25	584	26.25	1428	36.5	2378	47	3353	57.5	4328
6	81	16.5	602	26.5	1451	36.75	2402	47.25	3376	57.75	4351
6.25	88	16.75	620	26.75	1474	37	2425	47.5	3399	58	4374
6.5	95	17	638	27	1497	37.25	2448	47.75	3423	58.25	4397
6.75	103	17.25	657	27.25	1520	37.5	2471	48	3446	58.5	4420
7	110	17.5	675	27.5	1543	37.75	2495	48.25	3469	58.75	4444
7.25	118	17.75	695	27.75	1566	38	2518	48.5	3492	59	4467
7.5	127	18	714	28	1590	38.25	2541	48.75	3515	59.25	4490
7.75	135	18.25	733	28.25	1613	38.5	2564	49	3539	59.5	4513
8	144	18.5	753	**28.48^**	1634	38.75	2587	49.25	3562	59.75	4536
8.25	153	**18.53***	755	28.5	1636	39	2611	49.5	3585	60	4560
8.5	162	18.75	773	28.75	1659	39.25	2634	49.75	3608	60.25	4583
8.75	172	19	792	29	1682	39.5	2657	50	3631	60.5	4606
9	182	19.25	812	29.25	1706	39.75	2680	50.25	3655	60.75	4629
9.25	192	19.5	832	29.5	1729	40	2703	50.5	3678	61	4652
9.5	202	**19.53#**	834	29.75	1752	40.25	2727	50.75	3701	61.25	4676
9.75	213	19.75	852	30	1775	40.5	2750	51	3724	61.5	4699
10	224	20	873	30.25	1798	40.75	2773	51.25	3747	61.75	4722
10.25	235	20.25	894	30.5	1822	41	2796	51.5	3771	62	4745

Table 2. Volume as a Function of Liquid Level for Tanks TK-CR-002 and TK-CR-003 (2 pages)

Ht. (in.)	Vol. (gal)	Ht. (in.)	Vol. (gal)	Ht. (in.)	Vol. (gal)	Ht. (in.)	Vol. (gal)	Ht. (in.)	Vol. (gal)	Ht. (in.)	Vol. (gal)
62.25	4768	71.5	5633	81	6545	90.5	7457	100	8368	109.5	9280
62.5	4792	71.75	5657	81.25	6569	90.75	7481	100.25	8392	109.75	9304
62.75	4815	72	5681	81.5	6593	91	7505	100.5	8416	110	9328
63	4838	72.25	5705	81.75	6617	91.25	7528	100.75	8440	110.25	9352
63.25	4861	72.5	5729	82	6641	91.5	7552	101	8464	110.5	9376
63.5	4884	72.75	5753	82.25	6665	91.75	7576	101.25	8488	110.75	9400
63.75	4908	73	5777	82.5	6689	92	7600	101.5	8512	111	9424
64	4931	73.25	5801	82.75	6713	92.25	7624	101.75	8536	111.25	9448
64.25	4954	73.5	5825	83	6737	92.5	7648	102	8560	111.5	9472
64.5	4977	73.75	5849	83.25	6761	92.75	7672	102.25	8584	111.75	9496
64.75	5000	74	5873	83.5	6785	93	7696	102.5	8608	112	9520
65	5024	74.25	5897	83.75	6809	93.25	7720	102.75	8632	112.25	9544
65.25	5047	74.5	5921	84	6833	93.5	7744	103	8656	112.5	9568
65.5	5070	74.75	5945	84.25	6857	93.75	7768	103.25	8680	112.75	9592
65.75	5093	75	5969	84.5	6881	94	7792	103.5	8704	113	9616
66	5116	75.25	5993	84.75	6905	94.25	7816	103.75	8728	113.25	9640
66.25	5140	75.5	6017	85	6929	94.5	7840	104	8752	113.5	9664
66.5	5163	75.75	6041	85.25	6953	94.75	7864	104.25	8776	113.75	9688
66.75	5186	76	6065	85.5	6977	95	7888	104.5	8800	114	9712
67	5209	76.25	6089	85.75	7001	95.25	7912	104.75	8824	114.25	9736
67.25	5232	76.5	6113	86	7025	95.5	7936	105	8848	114.5	9760
67.5	5256	76.75	6137	86.25	7049	95.75	7960	105.25	8872	114.75	9784
67.75	5279	77	6161	86.5	7073	96	7984	105.5	8896	115	9808
68	5302	77.25	6185	86.75	7097	96.25	8008	105.75	8920	115.25	9832
68.25	5325	77.5	6209	87	7121	96.5	8032	106	8944	115.5	9856
68.5	5348	77.75	6233	87.25	7145	96.75	8056	106.25	8968	115.75	9880
68.75	5372	78	6257	87.5	7169	97	8080	106.5	8992	116	9904
69	5395	78.25	6281	87.75	7193	97.25	8104	106.75	9016	116.25	9928
69.25	5418	78.5	6305	88	7217	97.5	8128	107	9040	116.5	9952
69.48**	5439	78.75	6329	88.25	7241	97.75	8152	107.25	9064	116.75	9976
69.5	5441	79	6353	88.5	7265	98	8176	107.5	9088	117	10000
69.75	5465	79.25	6377	88.75	7289	98.25	8200	107.75	9112	117.25	10023
70	5489	79.5	6401	89	7313	98.5	8224	108	9136	117.5	10047
70.25	5513	79.75	6425	89.25	7337	98.75	8248	108.25	9160	117.75	10071
70.5	5537	80	6449	89.5	7361	99	8272	108.5	9184	118	10095
70.75	5561	80.25	6473	89.75	7385	99.25	8296	108.75	9208	118.25	10119
71	5585	80.5	6497	90	7409	99.5	8320	109	9232	**118.48@**	10141
71.25	5609	80.75	6521	90.25	7433	99.75	8344	109.25	9256		

Footnotes:

- * Bottom of coil
- # Transition from flange dish to knuckle dish
- ^ Transition from knuckle dish to straight section of tank
- ** Top of coil
- @ Maximum fill height of tank

3.50 244-CR VAULT / SUMP-CR-003

Volumes from RPP-RPT-45845, Rev. 0, *Completion of Pumpable Removal from 244-CR Vault* transmitted to DOE-ORP with letter WRPS-1000848, *Contract Number DE-AC27-08RV14800 – Washington River Protection Solutions LLC Completion of Performance Based Incentive Fee 1.5.1, Remove Liquids from the Secondary Containment of the 244-CR Vault – Request for Incremental Fee Approval*, dated April 28, 2010.

Transfer of waste from Sump-CR-003 was completed March 10, 2010 (RPP-RPT-45845, Page 2) leaving an estimated 3-in waste heel in the sump determined visually (RPP-RPT-45845, Page 5).

$Waste\ Volume = 17\ gallons$ (from WRPS-1000848)
$Waste\ Volume = 17\ gallons/(1000\ gallons/kilogallon)$
$Waste\ Volume =< 0.10\ kilogallons$

$Liquid + Sludge\ Volume = 17\ gallons$

244-CR Vault / Sump-CR-003 Calibration Table

RPP-CALC-24219, Rev. 0 **Page** 23 **of** 25

Title: 244-CR Vault Tank and Cell Volume Calculations **Identifier:** P-06-18 Rev: 0

Originator: AB Carlson **Date:** 1/10/05

Checker: MM Durst **Date:** 1/10/05

Organizational Manager: MJ Sutey **Date:** 1/12/05

Table 4. Volume as a Function of Liquid Level for Cells CR-002 and CR-003
(As Measured from the Bottom of the Sump)

Ht. (in.)	Vol. (gal)	Ht. (in.)	Vol. (gal)	Ht. (in.)	Vol. (gal)	Ht. (in.)	Vol. (gal)	Ht. (in.)	Vol. (gal)	Ht. (in.)	Vol. (gal)
0	0	11.25	42	22.5	1925	33.5	3879	44.75	5343	56	6518
0.25	0.9	11.5	43	22.75	1975	33.75	3917	45	5370	56.25	6544
0.5	1.9	11.75	44	23	2025	34	3955	45.25	5397	56.5	6570
0.75	2.8	**12***	45	**23.14^**	2052	34.25	3992	45.5	5424	56.75	6596
1	3.7	12.25	47	23.25	2074	34.5	4030	45.75	5451	57	6622
1.25	4.7	12.5	52	23.5	2124	34.75	4067	46	5478	57.25	6647
1.5	5.6	12.75	62	23.75	2173	35	4104	46.25	5505	57.5	6673
1.75	6.5	13	78	24	2222	35.25	4141	46.5	5531	57.75	6699
2	7.5	13.25	102	24.25	2271	35.5	4177	46.75	5558	58	6725
2.25	8.4	13.5	135	24.5	2320	35.75	4213	47	5584	58.25	6751
2.5	9.4	**13.75#**	179	24.75	2368	36	4249	47.25	5611	58.5	6777
2.75	10	14	229	25	2416	36.25	4285	47.5	5637	58.75	6802
3	11	14.25	279	25.25	2463	36.5	4320	47.75	5664	59	6828
3.25	12	14.5	329	25.5	2511	36.75	4355	48	5690	59.25	6854
3.5	13	14.75	379	25.75	2558	37	4390	48.25	5716	59.5	6880
3.75	14	15	429	26	2604	37.25	4424	48.5	5742	59.75	6906
4	15	15.25	479	26.25	2651	37.5	4459	48.75	5768	60	6932
4.25	16	15.5	529	26.5	2697	37.75	4493	49	5794	60.25	6957
4.5	17	15.75	578	26.75	2743	38	4526	49.25	5820	60.5	6983
4.75	18	16	628	27	2789	38.25	4560	49.5	5846	60.75	7009
5	19	16.25	678	27.25	2834	38.5	4593	49.75	5872	61	7035
5.25	20	16.5	728	27.5	2879	38.75	4626	50	5898	61.25	7061
5.5	21	16.75	778	27.75	2924	39	4659	50.25	5924	61.5	7087
5.75	22	17	828	28	2968	39.25	4691	50.5	5950	61.75	7112
6	22	17.25	878	28.25	3013	39.5	4723	50.75	5976	62	7138
6.25	23	17.5	927	28.5	3057	39.75	4755	51	6002	62.25	7164
6.5	24	17.75	977	28.75	3100	40	4787	51.25	6028	62.5	7190
6.75	25	18	1027	29	3144	40.25	4818	51.5	6053	62.75	7216
7	26	18.25	1077	29.25	3187	40.5	4850	**51.75****	6079	63	7241
7.25	27	18.5	1127	29.5	3230	40.75	4881	52	6105	63.25	7267
7.5	28	18.75	1177	29.75	3272	41	4911	52.25	6131	63.5	7293
7.75	29	19	1227	30	3315	41.25	4942	52.5	6157	63.75	7319
8	30	19.25	1277	30.25	3357	41.5	4972	52.75	6183	64	7345
8.25	31	19.5	1326	30.5	3399	41.75	5002	53	6208	64.25	7371
8.5	32	19.75	1376	30.75	3440	42	5031	53.25	6234	64.5	7396
8.75	33	20	1426	31	3481	42.25	5061	53.5	6260	64.75	7422
9	34	20.25	1476	31.25	3522	42.5	5090	53.75	6286	65	7448
9.25	35	20.5	1526	31.5	3563	42.75	5119	54	6312	65.25	7474
9.5	36	20.75	1576	31.75	3603	43	5147	54.25	6338	65.5	7500
9.75	36	21	1626	32	3643	43.25	5176	54.5	6363	65.75	7526
10	37	21.25	1676	32.25	3683	43.5	5204	54.75	6389	66	7551
10.25	38	21.5	1725	32.5	3723	43.75	5232	55	6415		
10.5	39	21.75	1775	32.75	3762	44	5260	55.25	6441		
10.75	40	22	1825	33	3801	44.25	5288	55.5	6467		
11	41	22.25	1875	33.25	3840	44.5	5315	55.75	6492		

Footnotes:

* Top of Sump/Low Point of Floor

\# High Point of Floor

^ Bottom of tank TK-CR-002 or TK-CR-003

** Transition between tank dished head and straight side of tank

3.51 244-CR VAULT / TK-CR-011

Waste volumes from RPP-RPT-24257, Rev. 0, *244-CR Vault Liquid Level Assessment and Video Inspection Completion Report*, Table 4-1.

Waste volumes from RPP-RPT-24257 Rev. 0, *244-CR Vault Liquid Level Assessment and Video Inspection Completion Report*, Table 4-1. Waste level was determined November 30, 2004 (Work Order 2W-03-01158/S *244-CR-011, Install Zip Cord & Sludge Weight*).

$$Waste\ Volume = 3990\ gallons$$
$$Waste\ Volume = 3990\ gallons/(1000\ gallons/kilogallon)$$
$$Waste\ Volume = 4.0\ kilogallons$$

$$Sludge\ Volume = 3797\ gallons$$

$$Liquid\ Volume = Waste\ Volume - Solids\ Volume$$
$$Liquid\ Volume = 3990\ gallons - 3797\ gallons$$
$$Liquid\ Volume = 193\ gallons$$

244-CR Vault / TK-CR-011 Calibration Table

RPP-CALC-24219, Rev. 0 **Page** 18 **of** 25

Title: 244-CR Vault Tank and Cell Volume Calculations **Identifier:** P-06-18 **Rev:** 0

Originator: AB Carlson **Date:** 1/10/05

Checker: MM Durst **Date:** 1/10/05

Organizational Manager: MJ Sutey **Date:** 1/10/05

Table 1. Volume as a Function of Liquid Level for Tanks TK-CR-001 and TK-CR-011 (2 pages)

Ht. (in.)	Vol. (gal)	Ht. (in.)	Vol. (gal)	Ht. (in.)	Vol. (gal)	Ht. (in.)	Vol. (gal)	Ht. (in.)	Vol. (gal)	Ht. (in.)	Vol. (gal)	Ht. (in.)	Vol. (gal)	Ht. (in.)	Vol. (gal)
0	0	14.5	672	28.75	2590	43	5309	57.5	8148	72	10988	86.5	13828	101	16667
0.25	0.2	14.75	696	29	2634	43.25	5358	57.75	8197	72.25	11037	86.75	13877	101.25	16716
0.5	0.8	15	719	29.25	2678	43.5	5407	58	8246	72.5	11086	87	13926	101.5	16765
0.75	1.8	15.25	743	29.5	2723	43.75	5456	58.25	8295	72.75	11135	87.25	13975	101.75	16814
1	3.3	15.5	767	29.75	2768	44	5505	58.5	8344	73	11184	87.5	14024	102	16863
1.25	5.1	15.75	792	30	2813	44.25	5554	58.75	8393	73.25	11233	87.75	14073	102.25	16912
1.5	7.3	16	817	30.25	2858	44.5	5603	59	8442	73.5	11282	88	14122	102.5	16961
1.75	10	16.25	842	30.5	2904	44.75	5651	59.25	8491	73.75	11331	88.25	14170	102.75	17010
2	13	16.5	868	30.75	2949	45	5700	59.5	8540	74	11380	88.5	14219	103	17059
2.25	16	16.75	894	31	2995	45.25	5749	59.75	8589	74.25	11429	88.75	14268	103.25	17108
2.5	20	17	921	31.25	3041	45.5	5798	60	8638	74.5	11478	89	14317	103.5	17157
2.75	25	17.25	948	31.5	3088	45.75	5847	60.25	8687	74.75	11527	89.25	14366	103.75	17206
3	29	17.5	975	31.75	3134	46	5896	60.5	8736	75	11576	89.5	14415	104	17255
3.25	34	17.75	1003	32	3181	46.25	5945	60.75	8785	75.25	11625	89.75	14464	104.25	17304
3.5	40	18	1031	32.25	3227	46.5	5994	61	8834	75.5	11674	90	14513	104.5	17353
3.75	46	18.25	1060	32.5	3274	46.75	6043	61.25	8883	75.75	11722	90.25	14562	104.75	17402
4	52	18.5	1088	32.75	3321	47	6092	61.5	8932	76	11771	90.5	14611	105	17451
4.25	59	18.75	1118	33	3368	47.25	6141	61.75	8981	76.25	11820	90.75	14660	105.25	17500
4.5	66	19	1147	33.25	3415	47.5	6190	62	9030	76.5	11869	91	14709	105.5	17549
4.75	73	19.25	1177	33.5	3463	47.75	6239	62.25	9079	76.75	11918	91.25	14758	105.75	17598
5	81	19.5	1208	33.75	3510	48	6288	62.5	9128	77	11967	91.5	14807	106	17647
5.25	89	19.75	1238	34	3558	48.25	6337	62.75	9177	77.25	12016	91.75	14856	106.25	17696
5.5	98	20	1269	34.25	3606	48.5	6386	63	9226	77.5	12065	92	14905	106.5	17745
5.75	107	20.25	1301	34.5	3653	48.75	6435	63.25	9274	77.75	12114	92.25	14954	106.75	17794
6	117	20.5	1333	34.75	3701	49	6484	63.5	9323	78	12163	92.5	15003	107	17842
6.25	126	20.75	1365	35	3749	49.25	6533	63.75	9372	78.25	12212	92.75	15052	107.25	17891
6.5	137	21	1397	35.25	3797	49.5	6582	64	9421	78.5	12261	93	15101	107.5	17940
6.75	147	21.25	1430	35.5	3845	49.75	6631	64.25	9470	78.75	12310	93.25	15150	107.75	17989
7	158	21.5	1464	35.75	3894	50	6680	64.5	9519	79	12359	93.5	15199	108	18038
7.25	170	21.75	1497	36	3942	50.25	6729	64.75	9568	79.25	12408	93.75	15248	108.25	18087
7.5	182	22	1532	36.25	3990	50.5	6778	65	9617	79.5	12457	94	15297	108.5	18136
7.75	194	22.25	1566	36.5	4039	50.75	6826	65.25	9666	79.75	12506	94.25	15346	108.75	18185
8	207	22.5	1601	36.75	4087	51	6875	65.5	9715	80	12555	94.5	15394	109	18234
8.25	220	22.75	1636	37	4136	51.25	6924	65.75	9764	80.25	12604	94.75	15443	109.25	18283
8.5	233	23	1671	37.25	4184	51.5	6973	66	9813	80.5	12653	95	15492	109.5	18332
8.75	247	23.25	1707	37.5	4233	51.75	7022	66.25	9862	80.75	12702	95.25	15541	109.75	18381
9	261	23.5	1744	37.75	4282	52	7071	66.5	9911	81	12751	95.5	15590	110	18430
9.25	276	23.75	1780	38	4330	52.25	7120	66.75	9960	81.25	12800	95.75	15639	110.25	18479
9.5	291	24	1817	38.25	4379	52.5	7169	67	10009	81.5	12849	96	15688	110.5	18528
9.75	306	24.25	1855	38.5	4428	52.75	7218	67.25	10058	81.75	12898	96.25	15737	110.75	18577
10	322	24.5	1893	38.75	4477	53	7267	67.5	10107	82	12946	96.5	15786	111	18626
10.25	338	24.75	1931	39	4526	53.25	7316	67.75	10156	82.25	12995	96.75	15835	111.25	18675
10.5	355	25	1969	39.25	4574	53.5	7365	68	10205	82.5	13044	97	15884	111.5	18724
10.75	372	25.25	2008	39.5	4623	53.75	7414	68.25	10254	82.75	13093	97.25	15933	111.75	18773
11	389	25.5	2047	39.75	4672	54	7463	68.5	10303	83	13142	97.5	15982	112	18822
11.25	407	25.75	2087	40	4721	54.25	7512	68.75	10352	83.25	13191	97.75	16031	112.25	18871
11.5	425	26	2127	40.25	4770	54.5	7561	69	10401	83.5	13240	98	16080	112.5	18920
11.75	443	26.25	2167	40.5	4819	54.75	7610	69.25	10450	83.75	13289	98.25	16129	112.75	18969
12	462	26.5	2208	40.70*	4859	55	7659	69.5	10498	84	13338	98.5	16178	113	19018
12.25	481	26.75	2249	40.75	4868	55.25	7708	69.75	10547	84.25	13387	98.75	16227	113.25	19066
12.5	501	27	2290	41	4917	55.5	7757	70	10596	84.5	13436	99	16276	113.5	19115
12.75	521	27.25	2332	41.25	4966	55.75	7806	70.25	10645	84.75	13485	99.25	16325	113.75	19164
13	542	27.5	2374	41.5	5015	56	7855	70.5	10694	85	13534	99.5	16374	114	19213
13.25	562	27.75	2417	41.75	5064	56.25	7904	70.75	10743	85.25	13583	99.75	16423	114.25	19262
13.5	584	27.89*	2440	42	5113	56.5	7953	71	10792	85.5	13632	100	16472	114.5	19311
13.75	605	28	2459	42.25	5162	56.75	8002	71.25	10841	85.75	13681	100.25	16521	114.75	19360
14	627	28.25	2503	42.5	5211	57	8050	71.5	10890	86	13730	100.5	16570	115	19409
14.25	650	28.5	2546	42.75	5260	57.25	8099	71.75	10939	86.25	13779	100.75	16618	115.25	19458

RPP-CALC-24219, Rev. 0 **Page** 19 **of** 25

Title: 244-CR Vault Tank and Cell Volume Calculations **Identifier:** P-06-18 **Rev:** 0

Originator: AB Carlson **Date:** 1/10/05

Checker: MM Durst **Date:** 1/10/05

Organizational Manager: MJ Sutey **Date:** 1/13/05

Table 1. Volume as a Function of Liquid Level for Tanks TK-CR-001 and TK-CR-011 (2 pages)

Ht. (in.)	Vol. (gal)	Ht. (in.)	Vol. (gal)	Ht. (in.)	Vol. (gal)	Ht. (in.)	Vol. (gal)	Ht. (in.)	Vol. (gal)	Ht. (in.)	Vol. (gal)	Ht. (in.)	Vol. (gal)	Ht. (in.)	Vol. (gal)
115.5	19507	128.75	22102	142	24697	155.25	27292	168.5	29887	181.75	32481	195	35076	208.25	37671
115.75	19556	129	22151	142.25	24746	155.5	27341	168.75	29936	182	32530	195.25	35125	208.5	37720
116	19605	129.25	22200	142.5	24795	155.75	27390	169	29985	182.25	32579	195.5	35174	208.75	37769
116.25	19654	129.5	22249	142.75	24844	156	27439	169.25	30033	182.5	32628	195.75	35223	209	37818
116.5	19703	129.75	22298	143	24893	156.25	27488	169.5	30082	182.75	32677	196	35272	209.25	37867
116.75	19752	130	22347	143.25	24942	156.5	27537	169.75	30131	183	32726	196.25	35321	209.5	37916
117	19801	130.25	22396	143.5	24991	156.75	27585	170	30180	183.25	32775	196.5	35370	209.75	37965
117.25	19850	130.5	22445	143.75	25040	157	27634	170.25	30229	183.5	32824	196.75	35419	210	38014
117.5	19899	130.75	22494	144	25089	157.25	27683	170.5	30278	183.75	32873	197	35468	210.25	38063
117.75	19948	131	22543	144.25	25137	157.5	27732	170.75	30327	184	32922	197.25	35517	210.5	38112
118	19997	131.25	22592	144.5	25186	157.75	27781	171	30376	184.25	32971	197.5	35566	210.75	38161
118.25	20046	131.5	22641	144.75	25235	158	27830	171.25	30425	184.5	33020	197.75	35615	211	38210
118.5	20095	131.75	22689	145	25284	158.25	27879	171.5	30474	184.75	33069	198	35664	211.25	38259
118.75	20144	132	22738	145.25	25333	158.5	27928	171.75	30523	185	33118	198.25	35713	211.5	38308
119	20193	132.25	22787	145.5	25382	158.75	27977	172	30572	185.25	33167	198.5	35762	211.75	38357
119.25	20242	132.5	22836	145.75	25431	159	28026	172.25	30621	185.5	33216	198.75	35811	212	38406
119.5	20290	132.75	22885	146	25480	159.25	28075	172.5	30670	185.75	33265	199	35860	212.25	38455
119.75	20339	133	22934	146.25	25529	159.5	28124	172.75	30719	186	33314	199.25	35909	212.5	38504
120	20388	133.25	22983	146.5	25578	159.75	28173	173	30768	186.25	33363	199.5	35958	212.75	38553
120.25	20437	133.5	23032	146.75	25627	160	28222	173.25	30817	186.5	33412	199.75	36007	213	38601
120.5	20486	133.75	23081	147	25676	160.25	28271	173.5	30866	186.75	33461	200	36056	213.25	38650
120.75	20535	134	23130	147.25	25725	160.5	28320	173.75	30915	187	33510	200.25	36105	213.5	38699
121	20584	134.25	23179	147.5	25774	160.75	28369	174	30964	187.25	33559	200.5	36153	213.75	38748
121.25	20633	134.5	23228	147.75	25823	161	28418	174.25	31013	187.5	33608	200.75	36202	214	38797
121.5	20682	134.75	23277	148	25872	161.25	28467	174.5	31062	187.75	33657	201	36251	214.25	38846
121.75	20731	135	23326	148.25	25921	161.5	28516	174.75	31111	188	33705	201.25	36300	214.5	38895
122	20780	135.25	23375	148.5	25970	161.75	28565	175	31160	188.25	33754	201.5	36349	214.75	38944
122.25	20829	135.5	23424	148.75	26019	162	28614	175.25	31209	188.5	33803	201.75	36398	215	38993
122.5	20878	135.75	23473	149	26068	162.25	28663	175.5	31257	188.75	33852	202	36447	215.25	39042
122.75	20927	136	23522	149.25	26117	162.5	28712	175.75	31306	189	33901	202.25	36496	215.5	39091
123	20976	136.25	23571	149.5	26166	162.75	28761	176	31355	189.25	33950	202.5	36545	215.75	39140
123.25	21025	136.5	23620	149.75	26215	163	28809	176.25	31404	189.5	33999	202.75	36594	216	39189
123.5	21074	136.75	23669	150	26264	163.25	28858	176.5	31453	189.75	34048	203	36643	216.25	39238
123.75	21123	137	23718	150.25	26313	163.5	28907	176.75	31502	190	34097	203.25	36692	216.5	39287
124	21172	137.25	23767	150.5	26361	163.75	28956	177	31551	190.25	34146	203.5	36741	216.75	39336
124.25	21221	137.5	23816	150.75	26410	164	29005	177.25	31600	190.5	34195	203.75	36790	217	39385
124.5	21270	137.75	23865	151	26459	164.25	29054	177.5	31649	190.75	34244	204	36839	217.25	39434
124.75	21319	138	23913	151.25	26508	164.5	29103	177.75	31698	191	34293	204.25	36888	217.5	39483
125	21368	138.25	23962	151.5	26557	164.75	29152	178	31747	191.25	34342	204.5	36937	217.75	39532
125.25	21417	138.5	24011	151.75	26606	165	29201	178.25	31796	191.5	34391	204.75	36986	218	39581
125.5	21466	138.75	24060	152	26655	165.25	29250	178.5	31845	191.75	34440	205	37035	218.25	39630
125.75	21514	139	24109	152.25	26704	165.5	29299	178.75	31894	192	34489	205.25	37084	218.5	39679
126	21563	139.25	24158	152.5	26753	165.75	29348	179	31943	192.25	34538	205.5	37133	218.75	39728
126.25	21612	139.5	24207	152.75	26802	166	29397	179.25	31992	192.5	34587	205.75	37182	219	39776
126.5	21661	139.75	24256	153	26851	166.25	29446	179.5	32041	192.75	34636	206	37231	219.25	39825
126.75	21710	140	24305	153.25	26900	166.5	29495	179.75	32090	193	34685	206.25	37280	219.5	39874
127	21759	140.25	24354	153.5	26949	166.75	29544	180	32139	193.25	34734	206.5	37329	219.75	39923
127.25	21808	140.5	24403	153.75	26998	167	29593	180.25	32188	193.5	34783	206.75	37377	220	39972
127.5	21857	140.75	24452	154	27047	167.25	29642	180.5	32237	193.75	34832	207	37426	220.25	40021
127.75	21906	141	24501	154.25	27096	167.5	29691	180.75	32286	194	34881	207.25	37475	220.5	40070
128	21955	141.25	24550	154.5	27145	167.75	29740	181	32335	194.25	34929	207.5	37524	220.70^	40110
128.25	22004	141.5	24599	154.75	27194	168	29789	181.25	32384	194.5	34978	207.75	37573		
128.5	22053	141.75	24648	155	27243	168.25	29838	181.5	32433	194.75	35027	208	37622		

Footnotes:

* Transition from flange dish to knuckle dish

\# Transition from knuckle dish to straight section of tank

^ Maximum fill height of tank

3.52 244-CR VAULT / SUMP-CR-011

Waste volume from RPP-RPT-45845, Rev. 0, *Completion of Pumpable Removal from 244-CR Vault* transmitted to DOE-ORP with letter WRPS-1000848, *Contract Number DE-AC27-08RV14800 – Washington River Protection Solutions LLC Completion of Performance Based Incentive Fee 1.5.1, Remove Liquids from the Secondary Containment of the 244-CR Vault – Request for Incremental Fee Approval*, dated April 28, 2010.

Transfer of waste from Sump-CR-011 was completed February 25, 2010 (RPP-RPT-45845, Page 2) leaving an estimated 3.5-in waste heel in the sump determined visually (RPP-RPT-45845, Page 3).

$Waste\ Volume = 13\ gallons$ (from WRPS-1000848)
$Waste\ Volume = 13\ gallons/(1000\ gallons/kilogallon)$
$Waste\ Volume =< 0.10\ kilogallons$

$Sludge\ Volume = 0\ gallons$

$Liquid\ Volume = Waste\ Volume - Solids\ Volume$
$Liquid\ Volume = 13\ gallons - 0\ gallons$
$Liquid\ Volume = 13\ gallons$

244-CR Vault / Sump-CR-011 Calibration Table

RPP-CALC-24219, Rev. 0 **Page** 24 **of** 25

Title: 244-CR Vault Tank and Cell Volume Calculations **Identifier:** P-06-18 **Rev:** 0

Originator: AB Carlson **Date:** 1/10/05

Checker: MM Durst **Date:** 1/10/05

Organizational Manager: MJ Sutey **Date:** 1/13/05

Table 5. Volume as a Function of Liquid Level for Cell CR-011
(As Measured from the Bottom of the Sump)

Ht. (in.)	Vol. (gal)	Ht. (in.)	Vol. (gal)	Ht. (in.)	Vol. (gal)	Ht. (in.)	Vol. (gal)	Ht. (in.)	Vol. (gal)	Ht. (in.)	Vol. (gal)
0	0	11.25	42	22.25	2307	33.5	5862	44.75	8631	56	10698
0.25	0.9	11.5	43	22.5	2395	33.75	5932	45	8684	56.25	10739
0.5	1.9	11.75	44	22.75	2482	34	6002	45.25	8737	56.5	10780
0.75	2.8	12*	45	23	2569	34.25	6071	45.5	8789	56.75	10821
1	3.7	12.25	47	23.25	2656	34.5	6140	45.75	8841	57	10862
1.25	4.7	12.5	51	23.5	2742	34.75	6208	46	8892	57.25	10903
1.5	5.6	12.75	57	23.75	2828	35	6276	46.25	8943	57.5	10944
1.75	6.5	13	66	24	2913	35.25	6344	46.5	8994	57.75	10985
2	7.5	13.25	77	24.25	2998	35.5	6411	46.75	9044	58	11025
2.25	8.4	13.5	93	24.5	3083	35.75	6478	47	9094	58.25	11066
2.5	9.4	13.75	112	24.75	3167	36	6544	47.25	9144	58.5	11106
2.75	10	14	135	25	3251	36.25	6610	47.5	9193	58.75	11147
3	11	14.25	163	25.25	3334	36.5	6676	47.75	9242	59	11187
3.25	12	14.5#	195	25.5	3417	36.75	6741	48	9290	59.25	11228
3.5	13	14.75	230	25.75	3499	37	6806	48.25	9339	59.5	11268
3.75	14	15	265	26	3582	37.25	6871	48.5	9386	59.75	11308
4	15	15.25	300	26.25	3663	37.5	6935	48.75	9434	60	11349
4.25	16	15.5	335	26.5	3745	37.75	6999	49	9481	60.25	11389
4.5	17	15.75	370	26.75	3826	38	7062	49.25	9528	60.5	11429
4.75	18	16	405	27	3906	38.25	7125	49.5	9574	60.75	11469
5	19	16.25	440	27.25	3986	38.5	7188	49.75	9620	61	11509
5.25	20	16.5	475	27.5	4066	38.75	7250	50	9666	61.25	11549
5.5	21	16.75	510	27.75	4146	39	7312	50.25	9711	61.5	11589
5.75	22	17	545	28	4225	39.25	7373	50.5	9756	61.75	11629
6	22	17.25	580	28.25	4303	39.5	7434	50.75	9801	62	11670
6.25	23	17.5	615	28.5	4381	39.75	7495	51	9845	62.25	11710
6.5	24	17.75	704	28.75	4459	40	7556	51.25	9890	62.5**	11750
6.75	25	18	793	29	4537	40.25	7616	51.5	9934	62.75	11790
7	26	18.25	882	29.25	4613	40.5	7675	51.75	9978	63	11830
7.25	27	18.5	971	29.5	4690	40.75	7734	52	10021	63.25	11870
7.5	28	18.75	1060	29.75	4766	41	7793	52.25	10065	63.5	11910
7.75	29	19	1149	30	4842	41.25	7852	52.5	10108	63.75	11950
8	30	19.25	1239	30.25	4918	41.5	7910	52.75	10151	64	11990
8.25	31	19.5	1328	30.5	4993	41.75	7968	53	10194	64.25	12030
8.5	32	19.75	1417	30.75	5067	42	8025	53.25	10237	64.5	12070
8.75	33	20	1506	31	5141	42.25	8082	53.5	10279	64.75	12110
9	34	20.25	1595	31.25	5215	42.5	8139	53.75	10322	65	12150
9.25	35	20.5	1684	31.5	5289	42.75	8195	54	10364	65.25	12190
9.5	36	20.75	1773	31.75	5362	43	8251	54.25	10406	65.5	12230
9.75	36	21	1863	32	5434	43.25	8306	54.5	10448	65.75	12270
10	37	21.25	1952	32.25	5507	43.5	8361	54.75	10490	66	12310
10.25	38	21.5	2041	32.5	5579	43.75	8416	55	10532		
10.5	39	21.57^	2065	32.75	5650	44	8470	55.25	10574		
10.75	40	21.75	2130	33	5721	44.25	8524	55.5	10615		
11	41	22	2219	33.25	5792	44.5	8578	55.75	10657		

Footnotes:

* Top of Sump/Low Point of Floor

\# High Point of Floor

^ Bottom of tank TK-CR-011

** Transition between tank dished head and straight side of tank

4.0 WASTE VOLUME ESTIMATE BASES 200-WEST AREA

4.1 213W-TK-1

HNF-2503, Rev. 0, *Authorization Basis Status Report (Miscellaneous TWRS Facilities, Tanks and Components)*, states that the tank was sampled and determined to be below the level of radiological concern (Section 3.3.3), using Letter 87250-SWES-91-022, *Disposal of Rain/Sanitary Water*, dated March 19, 1991 as the basis. The letter includes November, 1990 sample results for tank contents: Total β concentration was 31%, and Total α 22% of Drinking Water Standard (Attachment B-1, page 1, and Appendix D, References 2 and 4).

The contents of tank 213W-TK-1 were pumped to a tanker truck in March, 1999 according to PCSACS notes. Prior to pumping waste level data were recorded between January 27, 199 and March 17, 1999. The last valid waste level was recorded March 17, 1999.

PCSACS Level Reading = 64.5-in
PCSACS Level Reading Date = 1999-03-17

Calibration Table: WRPS-0901391, *Tank Farm Catch Tank Calibrations*, page 4

64-in = 1547 gallons
65-in = 1571 gallons

$$PCSACS\ Level\ Reading = 64.5 - in = 1547\ gallons + 0.50\ x\ (1571 - 1547\ gallons)$$
$$Waste\ Volume = 1559\ gallons$$
$$Waste\ Volume = 1559\ gallons/(1000\ gallons/kilogallon)$$
$$Waste\ Volume = 1.6\ kilogallons$$

213W-TK-1 Calibration Table

D.J. Washenfelder
Page 4
August 14, 2009

WRPS-0901391

Tank: 213-W-Tk-1

Date of Calibration: Calculated

NOMINAL TANK CAPACITY: 1859 Gal.

DIMENSIONS: 7'0" I.D.

50%: 936 Gal. 80%: 1487 Gal.

6'6" Tall

REF. DWG #: H-2-93713

in.	gal	in.	gal	in.	gal	in.	gal	in.	gal
1	36	17	420	33	804	49	1188	65	1571
2	60	18	444	34	828	50	1212	66	1595
3	84	19	468	35	852	51	1236	67	1619
4	108	20	492	36	876	52	1259	68	1643
5	132	21	516	37	900	53	1283	69	1667
6	156	22	540	38	924	54	1307	70	1691
7	180	23	564	39	948	55	1331	71	1715
8	204	24	588	40	972	56	1355	72	1739
9	228	25	612	41	996	57	1379	73	1763
10	252	26	636	42	1020	58	1403	74	1787
11	276	27	660	43	1044	59	1427	75	1811
12	300	28	684	44	1068	60	1451	76	1835
13	324	29	708	45	1092	61	1475	77	1859
14	348	30	732	46	1116	62	1499		
15	372	31	756	47	1140	63	1523		
16	396	32	780	48	1164	64	1547		

4.2 231-W-151 TK-001 AND TK-002

Waste volumes for tanks 231-W-151 TK-001 and TK-002 are reported in Letter, H. L. Butts, Pacific Northwest Laboratories to C. B. Foster, Atlantic Richfield Hanford Co., *231-W-151 Sump Tanks*, dated August 15, 1974. Tank TK-001 contained 1430 gallons of liquid with insufficient sludge to collect a sample; Tank TK-002 was filled to capacity at 955 gallons, with a 1-in solids layer. The vault is equipped with a french drain; the letter concludes that the drain is plugged because rainwater is observed standing over it for long periods of time. Both tanks were equipped with weight factor instrumentation.

Letter G. C. Oberg to M. L. Short, Atlantic Richfield Hanford Company, *Removal of Solution from Two 231-W-151 Tanks*, dated March 3, 1975, states the 231-Z Building drained by these tanks was scheduled for decontamination during FY 1976, so Atlantic Richfield Hanford Company's pumping of the tanks would occur later that previously planned. No further correspondence was recovered from records archives.

WHC-EP-0560, *Miscellaneous Underground Radioactive Waste Tanks* states that the tanks were not emptied, but provides no attribution (page 2-1)

231-W-151 TK-001 Waste Volume:

$Waste\ Volume = 1430\ gallons$ (from H. L. Butts letter)
$Waste\ Volume = 1430\ gallons/(1000\ gallons/kilogallon)$
$Waste\ volume = 1.4\ kilogallons$

231-W-151 TK-002 Waste Volume:

$Waste\ Volume = 955\ gallons$ (from H. L. Butts letter)
$Waste\ Volume = 955\ gallons/(1000\ gallons/kilogallon)$
$Waste\ volume = 0.96\ kilogallons$

RECEIVED
AUG 16 1974
H. P. SHAW

Battelle
Pacific Northwest Laboratories
Battelle Boulevard
Richland, Washington 99352
Telephone (509) 942-2733
Telex 32-6345

(1) H.P. Shaw
(2) G. Burton
C. Oberg.
cc: File on Found Tanks

August 15, 1974

Mr. C. B. Foster
Research Engineering
Atlantic Richfield Hanford Co.
Federal Building
Richland, WA 99352

Subject: 231-W-151 Sump Tanks

Dear Mr. Foster:

The 231-W-151 sump tanks were sampled on May 9, 1974. A water sample was taken from No. 1 and No. 2 tanks and a sludge sample was taken from No. 2 tank. The analytical report of these is included.

No. 1 tank is 9 ft diameter by 9 ft high with a capacity of 3950 gallons to overflow and at the present time has 1430 gallons in it. There were not enough solids in the bottom to obtain a sample. The analytical report of the water indicates there is 0.001 gram of Pu in the tank.

No. 2 tank is 5 ft diameter by 7 ft high with a capacity of 955 gallons to overflow and is full. There was approximately 1 in. of solids where the sample was taken. Assuming this is uniform over the bottom of the tank and there is a density of 3 g/cm^3, the analytical report would indicate there are 228 grams of Pu in the sludge and <0.001 gram in the water.

The sump inside dimensions are 15 ft x 15 ft x 17 ft 6 in. deep with 3 ft being above grade. There is a French drain in the northwest corner, but after it rains water will stand over the drain for a long period of time indicating the drain is plugged. The radiation survey showed 10 mR/hr at the hatch cover opening and 100 mR/hr at the tank tops.

Sincerely,

H. L. Butts

H. L. Butts, Manager
Facilities Engineering
231-Z Bldg., 200-W Area

HLB:cww

cc: J. L. Rhoades, AEC-RL

AUG 29 1974

RECEIVED
AUG 23 1974
G. BURTON, JR

4.3 240-S-302

Tank 240-S-302 was declared leaking August 30, 2007 (RPP-ASMT-35057 Rev. 0, *Tank 240-S-302 Leak Assessment Report*).

PCSACS Level Reading = 16.47-in
PCSACS Level Reading Date = 2014-04-15

Calibration Table: SD-RE-TI-057, Rev. 0, *Tank Farms Catch Tanks – Calibration Tables*, Table 7, is applicable calibration table. Table 7 includes waste volumes for waste levels up to 4-ft 6-in, and notes that the table is also applicable to numerous other horizontal catch tanks, including 241-ER-311. Engineering Change Notice ECN-630520, *Incorporation of Catch Tank Specification Limits in SD-WM--TI-352, N1743*, page 12 provides tank 241-ER-311 waste volumes for waste levels to 108-in, the tank capacity. Therefore this table can be used for tank 240-S-302 waste levels greater than 4-ft 6-in.

16-in = 1600 gallons
17-in = 1750 gallons

$$PCSACS\ Level\ Reading = 16.47 - in = 1600\ gallons + 0.47\ x\ (1750 - 1600\ gallons)$$
$$Waste\ Volume = 1670\ gallons$$
$$Waste\ Volume = 1670\ gallons/(1000\ gallons/kilogallon)$$
$$Waste\ volume = 1.7\ kilogallons$$

240-S-302 Calibration Table

TABLE 7. Horizontal Tanks S-302, S-302-A, TX-302, TX-302-C, TX-302-B, UX-302-R, TY-302-A, B-302-B, BX-302-A, 311-ER, and SX-304.

Feet	Inches	Gallons	Feet	Inches	Gallons
	1	27	2	4	3,600
	2	74		5	3,790
	3	135		6	3,970
	4	205		7	4,160
	5	290		8	4,350
	6	375		9	4,540
	7	475		10	4,740
	8	580		11	4,930
	9	690	3	0	5,130
	10	805		1	5,320
	11	925		2	5,520
1	0	1,050		3	5,720
	1	1,185		4	5,930
	2	1,320		5	6,130
	3	1,460		6	6,340
	4	1,600		7	6,540
	5	1,750		8	6,750
	6	1,900		9	6,960
	7	2,060		10	7,160
	8	2,220		11	7,370
	9	2,380	4	0	7,580
	10	2,550		1	7,790
	11	2,720		2	8,000
2	0	2,890		3	8,210
	1	3,060		4	8,420
	2	3,240		5	8,630
	3	3,420		6	8,840

NOTE: 1. Calibration of 9 ft diameter, 35 ft 9½ in. long between rounded ends.
2. Maximum liquid volume - 8,840 gal.
3. Tank capacity - 17,684 gal.

4.4 241-E/W-151 (241-EW-151)

Tank 241-E/W-151 is suspected of having a small continuing liquid intrusion. The intrusion is documented for trending purposes in Problem Evaluation Request WRPS-PER-2014-1682.

PCSACS Level Reading = 56-in
PCSACS Level Reading Date = 2013-12-05

Calibration Table: ECN-630520, *Incorporation of Catch Tank Specification Limits in SD-WM-TI-352, N1743*, page 7.

$$\text{PCSACS Level Reading} = 56 - in = 540\ gallons$$
$$Waste\ Volume = 540\ gallons/(1000\ gallons/kilogallon)$$
$$Waste\ Volume = 0.54\ kilogallons$$

241-E/W-151 (241-EW-151) Calibration Table

ECN 630520, Pg # 7

(4)

TANK(S) 241-EW-151 and 241-A-350 Catch Tanks
Date of Calibration: Calculated

NOMINAL TANK CAPACITY: 790 Gal.
50% 395 Gal. 80% 632 Gal.
REF. DWG. #: H-2-43146, H-2-70538, D-62002

DIMENSIONS: 4'6" O.D.
6'10" High
Vert. Cylinder

LEVEL MEASUREMENT: ☐ Manual Tape ☐ FIC Transmitter Range:

in.	gal	in.	gal	in.	gal	in.	gal	in.	gal
1"	10	18"	174	35"	337	52"	501	69"	665
2"	19	19"	183	36"	347	53"	511	70"	675
3"	29	20"	193	37"	357	54"	521	71"	685
4"	39	21"	202	38"	366	55"	530	72"	694
5"	48	22"	212	39"	376	56"	540	73"	704
6"	58	23"	222	40"	386	57"	550	74"	714
7"	67	24"	231	41"	395	58"	559	75"	723
8"	77	25"	241	42"	405	59"	569	76"	733
9"	87	26"	251	43"	415	60"	579	77"	742
10"	96	27"	260	44"	424	61"	588	78"	752
11"	106	28"	270	45"	434	62"	598	79"	762
12"	116	29"	280	46"	444	63"	607	80"	771
13"	125	30"	289	47"	453	64"	617	81"	781
14"	135	31"	299	48"	463	65"	627	82"	790
15"	145	32"	309	49"	472	66"	636		
16"	154	33"	318	50"	482	67"	646		
17"	164	34"	328	51"	492	68"	656		

NOTES: The A-350 caisson sump is 12" ID x 2" deep, and holds 4 gal. The caisson itself is 8' I.D., and should fill up around the catch tank. It would hold approx. 5000 gal.

The EW-151 catch tank pit has no sump. Any spill or overflow from the tank itself would run to a floor drain, then to soil. (French drain)

4.5 241-S-302-A

PCSACS Level Reading = 55.4-in
PCSACS Level Reading Date = 2001-03-19

Calibration Table: WRPS-0901391, *Tank Farm Catch Tank Calibrations*, Page 8. Alternate calibration tables applicable to this tank are SD-RE-TI-057 Rev. 0, *Tank Farms Catch Tanks – Calibration Tables*, Table 7, and ECN-630520, *Incorporation of Catch Tank Specification Limits in SD-WM--TI-352,* N1743, page 12. Minor volume differences exist among the tables because of calculation assumptions.

55-in = 9166 gallons (from WRPS-0901391)
56-in = 9379 gallons (from WRPS-0901391)

PCSACS Level Reading $= 55.4 - in = 9166\ gallons + 0.4\ x\ (9379 - 9166\ gallons)$
$Waste\ Volume = 9251\ gallons$

WHC-SD-WM-WP-069, Rev. 1, *Engineering Work Plan – Sealing Leak in Catch Tank 241-S-302-A*, states tank would be filled to at least 50% capacity with grout, [8,953 gallons] (page 3).

$$Waste\ volume\ remaining\ in\ tank, corrected\ for\ volume\ diplaced\ by\ grout\ repair = 9251\ gallons - 8953\ gallons$$
$$Waste\ volume\ remaining\ in\ tank, corrected\ for\ volume\ diplaced\ by\ grout\ repair = 298\ gallons$$
$$Waste\ Volume = 298\ gallons/(1000\ gallons/kilogallon)$$
$$Waste\ Volume = 0.30\ kilogallons$$

241-S-302-A Calibration Table

D.J. Washenfelder
Page 8
August 14, 2009

WRPS-0901391

Tanks: 241-S-302A

Date of Calibration: Calculated

NOMINAL TANK CAPACITY: 17719 Gal.

50%: 8846 Gal. 80%: 15214 Gal.

REF. DWG #: H-2-1796

DIMENSIONS: 9'0" O.D.
39' 3 1/8" Long
8'6" Radius

in.	gal	in.	gal	in.	gal	in.	gal	in.	gal
1	21	25	3090	49	7887	73	12907	97	16903
2	67	26	3270	50	8094	74	13104	98	17021
3	127	27	3452	51	8309	75	13299	99	17133
4	199	28	3636	52	8525	76	13492	100	17239
5	280	29	3823	53	8739	77	13683	101	17337
6	370	30	4012	54	8953	78	13872	102	17428
7	467	31	4203	55	9166	79	14059	103	17510
8	572	32	4396	56	9379	80	14244	104	17583
9	683	33	4590	57	9592	81	14426	105	17645
10	800	34	4787	58	9805	82	14606	106	17693
11	923	35	4985	59	10018	83	14783	107	17719
12	1051	36	5185	60	10230	84	14958		
13	1184	37	5387	61	10441	85	15129		
14	1322	38	5589	62	10652	86	15298		
15	1464	39	5793	63	10862	87	15463		
16	1610	40	5999	64	11071	88	15625		
17	1761	41	6205	65	11280	89	15784		
18	1915	42	6413	66	11488	90	15938		
19	2073	43	6621	67	11694	91	16089		
20	2235	44	6830	68	11900	92	16236		
21	2400	45	7040	69	12104	93	16379		
22	2568	46	7251	70	12307	94	16518		
23	2739	47	7463	71	12508	95	16651		
24	2913	48	7674	72	12708	96	16780		

4.6 241-S-302-B

Stabilization Evaluation Form: Undated, unsigned copy. Don't Say It … *Write It!* dated November 15, 1984 indicates tank was interim stabilized at that time.
Solids Level Reading = 0-in
Solids Level Reading Date = 1984-09
Waste Level ("Liquid Level") Reading = 0-in
Waste Level ("Liquid Level") Reading Date = 1984-04

Calibration Table: WRPS-0901391, *Tank Farm Catch Tank Calibrations* page 9. Alternate calibration table applicable to this tank is SD-RE-TI-057 Rev. 0 *Tank Farms Catch Tanks – Calibration Tables*, Table 6, for waste levels up to 4-ft 6-in. Minor volume differences exist between the tables because of calculation assumptions.

0-in = 0 gallons (from WRPS-0901391)

$$Waste\ Volume = 0 - in = 0\ gallons$$
$$Waste\ Volume = 0\ gallons/(1000\ gallons/kilogallon)$$
$$Waste\ Volume = < 0.10\ kilogallons$$

$$Solids\ Volume = 0 - in = 0\ gallons$$

$$Liquid\ Volume = Waste\ Volume - Solids\ Volume$$
$$Liquid\ Volume = 0\ gallons - 0\ gallons$$
$$Liquid\ Volume = 0\ gallons$$

241-S-302-B Calibration Table

D.J. Washenfelder
Page 9
August 14, 2009

WRPS-0901391

Tanks: 241-S-302B

Date of Calibration: Calculated

NOMINAL TANK CAPACITY: 14476 Gal.

50%: 7227 Gal. 80%: 12436.4 Gal.

REF. DWG #: H-2-1821

DIMENSIONS: 9'0" O.D.
32' 1 5/8" Long
8'6" Radius

in.	gal	in.	gal	in.	gal	in.	gal	in.	gal
1	17	25	2517	49	6442	73	10551	97	13814
2	54	26	2664	50	6611	74	10712	98	13910
3	103	27	2812	51	6787	75	10872	99	14000
4	161	28	2963	52	6964	76	11030	100	14086
5	227	29	3116	53	7140	77	11186	101	14166
6	300	30	3270	54	7314	78	11341	102	14240
7	379	31	3426	55	7489	79	11494	103	14307
8	464	32	3584	56	7664	80	11645	104	14366
9	555	33	3743	57	7838	81	11794	105	14416
10	650	34	3904	58	8012	82	11941	106	14455
11	750	35	4066	59	8186	83	12085	107	14476
12	854	36	4230	60	8360	84	12228		
13	962	37	4395	61	8533	85	12368		
14	1075	38	4561	62	8706	86	12505		
15	1190	39	4728	63	8878	87	12640		
16	1310	40	4896	64	9049	88	12772		
17	1432	41	5065	65	9220	89	12901		
18	1558	42	5234	66	9390	90	13028		
19	1687	43	5405	67	9559	91	13151		
20	1819	44	5576	68	9727	92	13271		
21	1954	45	5748	69	9894	93	13387		
22	2091	46	5921	70	10060	94	13500		
23	2231	47	6094	71	10225	95	13608		
24	2373	48	6268	72	10389	96	13713		

241-S-302-B Stabilization Evaluation Form

6

STABILIZATION EVALUATION FORM

Tank: S-302-B CATCH TANK

Evaluation (see continuation page for calculations and additional comments):

(X) Tank history review completed

(X) Tank composition data reviewed

Tank Description: CATCH TANK

Solids Level: 0'0" Date: 9-84 Method: DOUGHNUT

Liquid Level: 0'0" Date: 9-84 Method: MANUAL TAPE

Estimated Supernatant Volume (gal): 0

Interim Stabilization Criteria: LESS THAN 400 GALLONS
(400 gallons or the volume of four inches of supernatant, whichever is greater)

( ) Cost/Benefit Analysis attached

Evaluation performed by: D W. Fukunaka Date: 11/16/89

Checked by: [illegible] Date: 11/16/89

Disposition of Tank:

(X) Tank Interim Stabilized at 0 gallons of supernatant liquid

( ) Tank not Interim Stabilized; stabilization activities resumed

Approved by: _____ Manager, TF&EPC _____ Date

_____ Manager, TFS&O _____ Date

_____ Program Manager _____ Date

DISTRIBUTION: TF&EPC Tank File, Tank Farm Surveillance Analysis, Approval Signatures

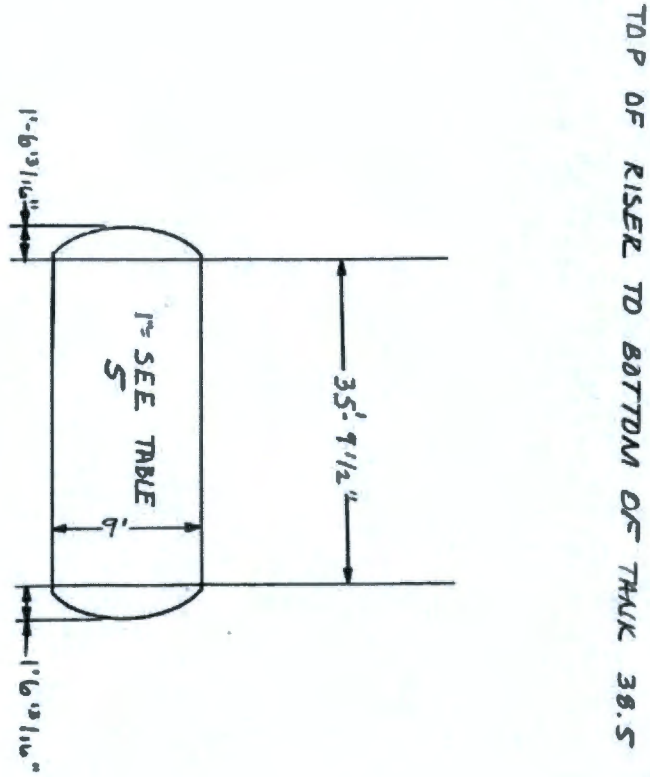
TOP OF RISER TO BOTTOM OF TANK 38.5
35'-9 1/2"
1'-6 13/16"
1'-6 13/16"
9'
1" = SEE TABLE 5

TABLE V

Calibration of 9' Diameter, 35'9 1/2" long between rounded ends.
Horizontal Tanks S-302, S-302-A, TX-302, TX-302-C, TX-302-B, UX-302-R, TY-302-A, B-302-B, BX-302-A, 311-ER SX-304

Feet	Inches	Gallons	Feet	Inches	Gallons
	1	27	2	4	3600
	2	74		5	3790
	3	135		6	3970
	4	205		7	4160
	5	290		8	4350
	6	375		9	4540
	7	475		10	4740
	8	580		11	4930
	9	690	3	0	5130
	10	805		1	5320
	11	925		2	5520
1	0	1050		3	5720
	1	1185		4	5930
	2	1320		5	6130
	3	1460		6	6340
	4	1600		7	6540
	5	1750		8	6750
	6	1900		9	6960
	7	2060		10	7160
	8	2220		11	7370
	9	2380	4	0	7580
	10	2550		1	7790
	11	2720		2	8000 45%
2	0	2890		3	8210
	1	3060		4	8420
	2	3240		5	8630
	3	3420		6	8840 50%

Maximum Liquid Volume 8840 gallons
Tank Capacity 17684 gallons

DON'T SAY IT --- *Write It!*

DATE 11-15-84

TO JOHN DOVEY FROM D. W. FUKUMOTO

RE: SX-302, TX-302-B, S-302B, TY-302B
JOHN - SX-302, ~~TX-302-B, S-302B, TY-302B~~ CATCH TANK IS NOW CONSIDERED STABILIZED. PLEASE PROCEED WITH ISOLATING THIS TANK. FOR TANK GEOMETRY SEE ATTACHED SHEETS.

THANK YOU

D. W. Fukumoto
D. W. FUKUMOTO

CC. BOB VAN METER RAU

"TO MAKE LIFE LAST, PUT SAFETY FIRST"

4.7 241-S-304

PCSACS Level Reading = 0.99-in
PCSACS Level Reading Date = 2013-06-26

Calibration Table: ECN-630520, Rev. 0, *Incorporation of Catch Tank Specification Limits in SD-WM-TI-352, N1743*, page 11

0-in = 0 gallons
1-in = 1 gallon

PCSACS Level Reading $= 0.99 - in = 0\ gallon + 0.99\ x\ (1 - 0\ gallons)$
$Waste\ Volume = 1\ gallon$
$Waste\ Volume = 1\ gallon/(1000\ gallons/kilogallon)$
$Waste\ Volume = < 0.10\ kilogallons$

241-S-304 Calibration Table

ECN 630520, pg #11

TANK(S) 241-S-304 Catch Tank
Date of Calibration: Calculated

NOMINAL TANK CAPACITY: 6,300 Gal. DIMENSIONS: 9' O.D.
50%: 3,150 Gal. 80%: 5,040 Gal. 15' High
REF. DWG. #: H-2-85035.6 SHAPE/POSITION: Vert/Rnd Ends

LEVEL MEASUREMENT: ☐ Manual Tape ☐ FIC Transmitter Range:

in.	gal	in.	gal	in.	gal	in.	gal	in.	gal
1"	1	25"	672	49"	1624	73"	2575	97"	3527
2"	5	26"	712	50"	1663	74"	2615	98"	3567
3"	12	27"	752	51"	1703	75"	2655	99"	3606
4"	21	28"	791	52"	1743	76"	2694	100"	3646
5"	32	29"	831	53"	1782	77"	2734	101"	3686
6"	46	30"	870	54"	1822	78"	2774	102"	3725
7"	62	31"	910	55"	1862	79"	2813	103"	3765
8"	81	32"	950	56"	1901	80"	2853	104"	3805
9"	102	33"	989	57"	1941	81"	2893	105"	3844
10"	126	34"	1029	58"	1981	82"	2932	106"	3884
11"	152	35"	1069	59"	2020	83"	2972	107"	3923
12"	180	36"	1108	60"	2060	84"	3012	108"	3963
13"	211	37"	1148	61"	2100	85"	3051	109"	4003
14"	243	38"	1188	62"	2139	86"	3091	110"	4042
15"	278	39"	1227	63"	2179	87"	3130	111"	4082
16"	316	40"	1267	64"	2219	88"	3170	112"	4122
17"	355	41"	1307	65"	2258	89"	3210	113"	4161
18"	395	42"	1346	66"	2298	90"	3249	114"	4201
19"	434	43"	1386	67"	2338	91"	3289	115"	4241
20"	474	44"	1426	68"	2377	92"	3329	116"	4280
21"	514	45"	1465	69"	2417	93"	3368	117"	4320
22"	553	46"	1505	70"	2456	94"	3408	118"	4360
23"	593	47"	1545	71"	2496	95"	3448	119"	4399
24"	633	48"	1584	72"	2536	96"	3487	120+	+40/in*

* Above 14", sides are straight at ≈40 gal/inch.

4.8 241-SX-302

Stabilization Evaluation Form: Undated, unsigned copy. Don't Say It … *Write It!* dated November 15, 1984 indicates tank was interim stabilized at that time.

Solids Level Reading = 12-in
Solids Level Reading Date = 1984-11
Waste Level ("Liquid Level") Reading = 14.25-in
Waste Level ("Liquid Level") Reading Date = 1984-11

Calibration Table: WRPS-0901391, *Tank Farm Catch Tank Calibrations*, Page 10

12-in = 1051 gallons
14-in = 1322 gallons
15-in = 1464 gallons

$$Waste\ Volume = 14.25 - in = 1322\ gallons + 0.25\ x\ (1464 - 1322\ gallons)$$
$$Waste\ Volume = 1358\ gallons$$
$$Waste\ Volume = 1358\ gallons/(1000\ gallons/kilogallon)$$
$$Waste\ Volume = 1.4\ kilogallons$$

$$Solids\ Volume = 12 - in = 1051\ gallons$$

$$Liquid\ Volume = Waste\ Volume - Solids\ Volume$$
$$Liquid\ Volume = 1358 - 1051\ gallons$$
$$Liquid\ Volume = 307\ gallons$$

241-SX-302 Calibration Table

D.J. Washenfelder
Page 10
August 14, 2009

WRPS-0901391

Tanks: 241-SX-302

Date of Calibration: Calculated

NOMINAL TANK CAPACITY: 17719 Gal.

50%: 8846 Gal. 80%: 15214 Gal.

REF. DWG #: H-2-39537

DIMENSIONS: 9'0" O.D.
39' 3 1/8" Long
8'6" Radius

in.	gal	in.	gal	in.	gal	in.	gal	in.	gal
1	21	25	3090	49	7887	73	12907	97	16903
2	67	26	3270	50	8094	74	13104	98	17021
3	127	27	3452	51	8309	75	13299	99	17133
4	199	28	3636	52	8525	76	13492	100	17239
5	280	29	3823	53	8739	77	13683	101	17337
6	370	30	4012	54	8953	78	13872	102	17428
7	467	31	4203	55	9166	79	14059	103	17510
8	572	32	4396	56	9379	80	14244	104	17583
9	683	33	4590	57	9592	81	14426	105	17645
10	800	34	4787	58	9805	82	14606	106	17693
11	923	35	4985	59	10018	83	14783	107	17719
12	1051	36	5185	60	10230	84	14958		
13	1184	37	5387	61	10441	85	15129		
14	1322	38	5589	62	10652	86	15298		
15	1464	39	5793	63	10862	87	15463		
16	1610	40	5999	64	11071	88	15625		
17	1761	41	6205	65	11280	89	15784		
18	1915	42	6413	66	11488	90	15938		
19	2073	43	6621	67	11694	91	16089		
20	2235	44	6830	68	11900	92	16236		
21	2400	45	7040	69	12104	93	16379		
22	2568	46	7251	70	12307	94	16518		
23	2739	47	7463	71	12508	95	16651		
24	2913	48	7674	72	12708	96	16780		

241-SX-302 Stabilization Evaluation Form

6

STABILIZATION EVALUATION FORM

Tank: SX-302

Evaluation (see continuation page for calculations and additional comments):

(X) Tank history review completed

(X) Tank composition data reviewed

Tank Description: CATCH TANK FOR SX-151 DIVERSION BOX

Solids Level: 12" Date: 11-84 Method: DOUGHNUT

Liquid Level: 14.25' Date: 11-84 Method: MANUAL TAPE

Estimated Supernatant Volume (gal): 314 gal

Interim Stabilization Criteria:
(400 gallons or the volume of four inches of supernatant, whichever is greater)

( ) Cost/Benefit Analysis attached

Evaluation performed by: D.W. Fukumoto Date: _____

Checked by: _____ Date: _____

Disposition of Tank:

(X) Tank Interim Stabilized at 314 gallons of supernatant liquid

( ) Tank not Interim Stabilized; stabilization activities resumed

Approved by:

_____ Manager, TF&EPC _____ Date

_____ Manager, TFS&O _____ Date

_____ Program Manager _____ Date

DISTRIBUTION: TF&EPC Tank File, Tank Farm Surveillance Analysis, Approval Signatures

H 2-39537

TOP OF RISER TO BOTTOM OF TANK 4207

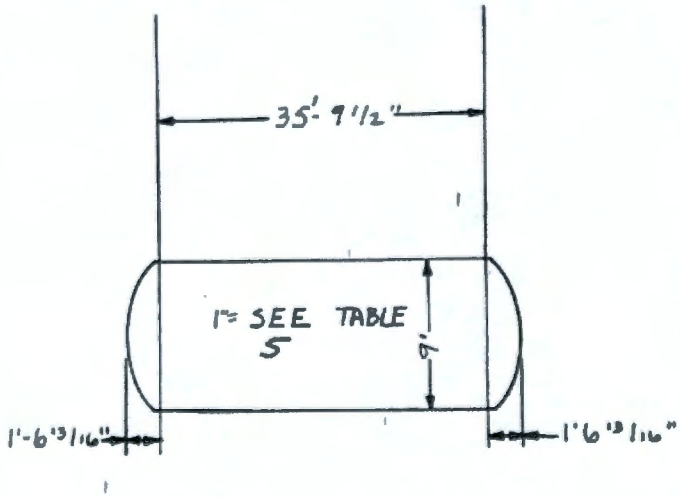

TABLE V

Calibration of 9' Horizontal Tanks — Diameter, 35'9 1/2" long between rounded ends. S-302, S-302-A, TX-302, TX-302-C, TX-302-B, UX-302-R, TY-302-A, B-302-B, BX-302-A, 311-ER SX-304

Feet	Inches	Gallons	Feet	Inches	Gallons
	1	27	2	4	3600
	2	74		5	3790
	3	135		6	3970
	4	205		7	4160
	5	290		8	4350
	6	375		9	4540
	7	475		10	4740
	8	580		11	4930
	9	690	3	0	5130
	10	805		1	5320
	11	925		2	5520
1	0	1050		3	5720
	1	1185		4	5930
	2	1320		5	6130
	3	1460		6	6340
	4	1600		7	6540
	5	1750		8	6750
	6	1900		9	6960
	7	2060		10	7160
	8	2220		11	7370
	9	2380	4	0	7580
	10	2550		1	7790
	11	2720		2	8000 45%
2	0	2890		3	8210
	1	3060		4	8420
	2	3240		5	8630
	3	3420		6	8840 50%

Maximum Liquid Volume 8840 gallons
Tank Capacity 17684 gallons

11,360

DON'T SAY IT --- *Write It!*

DATE 11-15-84

TO JOHN DOVEY

FROM D. W. FUKUMOTO

RE: SX-302, TX-302-B, S-302B, TY-302B

JOHN - SX-302, ~~TX-302-B, S-302B, TY-302B~~ CATCH TANK IS NOW CONSIDERED STABILIZED. PLEASE PROCEED WITH ISOLATING THIS TANK. FOR TANK GEOMETRY SEE ATTACHED SHEETS.

THANK YOU

D. W. Fukumoto

D. W. FUKUMOTO

CC. BOB VAN METER RAU

"TO MAKE LIFE LAST, PUT SAFETY FIRST"

4.9 241-T-301 (241-T-301B)

Stabilization Evaluation Form: 2005-07-08
Solids Level Reading = 110.5-in
Solids Level Reading Date = 1985-06-24
Waste Level ("Liquid Level") Reading = 113.5-in
Waste Level ("Liquid Level") Reading Date = 1985-07-03

Calibration Table: ECN-630520, *Incorporation of Catch Tank Specification Limits in SD-WM--TI-352, N1743*, page 13

110-in = 21545 gallons
111-in = 21741 gallons
113-in = 22132 gallons
114-in = 22328 gallons

$$Waste\ Volume = 113.5 - in = 22132\ gallons + 0.50\ x\ (22328 - 22132\ gallons)$$
$$Waste\ Volume = 22230 gallons$$
$$Waste\ Volume = 22230\ gallons/(1000\ gallons/kilogallon)$$
$$Waste\ Volume = 22.0\ kilogallons$$

$$Solids\ Volume = 110.5 - in = 21545\ gallons + 0.5\ x\ (21741 - 21545\ gallons)$$
$$Solids\ Volume = 21643\ gallons$$

$$Liquid\ Volume = Waste\ Volume - Solids\ Volume$$
$$Liquid\ Volume = 22230 - 21643\ gallons$$
$$Liquid\ Volume = 587\ gallons$$

241-T-301 (241-T-301B) Calibration Table

ECN 630520, pg # 3 (47) ~~361~~

TANK(S) Group 3: 301's, 361's B, C, T, U (including 241-U-301-B)
Date of Calibration: Calculated

NOMINAL TANK CAPACITY: 36,430 Gal. DIMENSIONS: 20' O.D.
50%: 18,215 Gal. 80%: 29,144 Gal. 15'6" High @ Overflow
REF. DWG. #: W-72903 SHAPE/POSITION: Vert/Flat Btm.

LEVEL MEASUREMENT: ☐ Manual Tape ☐ FIC Transmitter Range:

in.	gal	in.	gal	in.	gal	in.	gal	in.	gal
1"	196	25"	4897	49"	9597	73"	14298	97"	18999
2"	392	26"	5092	50"	9793	74"	14494	98"	19194
3"	588	27"	5288	51"	9989	75"	14690	99"	19390
4"	783	28"	5484	52"	10185	76"	14886	100"	19586
5"	979	29"	5680	53"	10381	77"	15081	101"	19782
6"	1175	30"	5876	54"	10577	78"	15277	102"	19978
7"	1371	31"	6072	55"	10772	79"	15473	103"	20174
8"	1567	32"	6268	56"	10968	80"	15669	104"	20370
9"	1763	33"	6463	57"	11164	81"	15865	105"	20566
10"	1959	34"	6659	58"	11360	82"	16061	106"	20761
11"	2154	35"	6855	59"	11556	83"	16257	107"	20957
12"	2350	36"	7051	60"	11752	84"	16452	108"	21153
13"	2546	37"	7247	61"	11948	85"	16648	109"	21349
14"	2742	38"	7443	62"	12143	86"	16844	110"	21545
15"	2938	39"	7639	63"	12339	87"	17040	111"	21741
16"	3134	40"	7834	64"	12535	88"	17236	112"	21937
17"	3330	41"	8030	65"	12731	89"	17432	113"	22132
18"	3526	42"	8226	66"	12927	90"	17628	114"	22328
19"	3721	43"	8422	67"	13123	91"	17823	115"	22524
20"	3917	44"	8618	68"	13319	92"	18019	116"	22720
21"	4113	45"	8814	69"	13514	93"	18215	117"	22916
22"	4309	46"	9010	70"	13710	94"	18411	118"	23112
23"	4505	47"	9206	71"	13906	95"	18607	119"	23308
24"	4701	48"	9401	72"	14102	96"	18803	120+	+196/in

Tank sides are straight @ approx. 196 gal/inch

241-T-301 (241-T-301B) Stabilization Evaluation Form

STABILIZATION EVALUATION FORM

Tank: T-301-B

Evaluation (see continuation page for calculations and additional comments):

(X) Tank history review completed

(X) Tank composition data reviewed

Tank Description: CATCH TANK

Solids Level: 110.5" Date: 6-24-85 Method: DOUGHNUT

Liquid Level: 113.5" Date: 7-3-85 Method: MANUAL TAPE

Estimated Supernatant Volume (gal): 588 gal.

Interim Stabilization Criteria: 3 inches
(400 gallons or the volume of four inches of supernatant, whichever is greater)

( ) Cost/Benefit Analysis attached

Evaluation performed by: Allen T. Alstad Date: 7-8-85

Checked by: Everett Wren Date: 7-8-85

Disposition of Tank:

(✓) Tank Interim Stabilized at 3 inches ~~gallons~~ of supernatant liquid

( ) Tank not Interim Stabilized; stabilization activities resumed

Approved by: RAVan Meter — Manager, TF&EPC — 7/8/85 Date

Manager, TFS&O — 7/8/85 Date

Program Manager — 7/8/85 Date

for R.D. Wojtasik

DISTRIBUTION: TF&EPC Tank File, Tank Farm Surveillance Analysis, Approval Signatures

W-72703

SENPLC T-6928

EVALUATION CALCULATIONS AND COMMENTS

Tank: T-301-B

Tank Geometry:

TOP OF RISER TO BOTTOM OF TANK 39.82

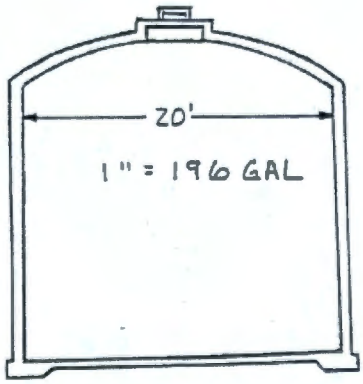

Calculations made by: Allen T. Alstad - 7-8-85

Checked by: [illegible] 7-8-85

4.10 241-TX-302-A

Stabilization Evaluation Form: 1984-12-04
Solids Level Reading = 21.40-in
Solids Level Reading Date = 1984-09
Waste Level ("Liquid Level") Reading = 21.50-in
Waste Level ("Liquid Level") Reading Date = 1984-08

Calibration Table: ECN-630520, *Incorporation of Catch Tank Specification Limits in SD-WM--TI-352, N1743*, page 12

21-in = 2416 gallons
22-in = 2583 gallons

$$Waste\ Volume = 21.50 - in = 2416\ gallons + 0.50\ x\ (2583 - 2416\ gallons)$$
$$Waste\ Volume = 2500 gallons$$
$$Waste\ Volume = 2500\ gallons/(1000\ gallons/kilogallon)$$
$$Waste\ Volume = 2.5\ kilogallons$$

$$Solids\ Volume = 21.40 - in = 2416\ gallons + 0.40\ x\ (2583 - 2416\ gallons)$$
$$Solids\ Volume = 2483\ gallons$$

$$Liquid\ Volume = Waste\ Volume - Solids\ Volume$$
$$Liquid\ Volume = 2500 - 2483\ gallons$$
$$Liquid\ Volume = 17\ gallons$$

241-TX-302-A Calibration Table

ECN 630520, pg # 12 (48)

TANK(S) Group 2 (including 311-ER, 241-TX-302-C and 241-UX-302-A)
Date of Calibration: Calculated

NOMINAL TANK CAPACITY: 17,670 Gal. DIMENSIONS: 9' O.D.
50%: 8,835 Gal. 80%: 14,136 Gal. 35' 9½" Btwn. Ends
REF. DWG. #: H-2-2268 SHAPE/POSITION: Horiz/Rnd. Ends

LEVEL MEASUREMENT: ☐ Manual Tape ☐ FIC Transmitter Range:

in.	gal	in.	gal	in.	gal	in.	gal	in.	gal
1"	27	23"	2752	45"	6969	67"	11517	89"	15577
2"	75	24"	2924	46"	7174	68"	11719	90"	15734
3"	138	25"	3098	47"	7381	69"	11919	91"	15888
4"	211	26"	3275	48"	7587	70"	12119	92"	16038
5"	295	27"	3454	49"	7795	71"	12317	93"	16184
6"	386	28"	3636	50"	8002	72"	12514	94"	16326
7"	485	29"	3820	51"	8210	73"	12710	95"	16464
8"	591	30"	4005	52"	8418	74"	12904	96"	16597
9"	703	31"	4193	53"	8626	75"	13097	97"	16725
10"	821	32"	4382	54"	8835	76"	13288	98"	16849
11"	945	33"	4573	55"	9044	77"	13477	99"	16967
12"	1073	34"	4766	56"	9252	78"	13665	100"	17079
13"	1206	35"	4960	57"	9460	79"	13850	101"	17185
14"	1344	36"	5156	58"	9668	80"	14034	102"	17284
15"	1486	37"	5353	59"	9875	81"	14216	103"	17375
16"	1632	38"	5551	60"	10083	82"	14395	104"	17459
17"	1782	39"	5751	61"	10289	83"	14572	105"	17532
18"	1936	40"	5951	62"	10496	84"	14746	106"	17595
19"	2093	41"	6153	63"	10701	85"	14918	107"	17643
20"	2253	42"	6356	64"	10906	86"	15087	108"	17670
21"	2416	43"	6559	65"	11111	87"	15254		
22"	2583	44"	6764	66"	11314	88"	15417		

241-TX-302-A Stabilization Evaluation Form

STABILIZATION EVALUATION FORM

Tank: TX-302 A

Evaluation (see continuation page for calculations and additional comments):

(X) Tank history review completed

(X) Tank composition data reviewed

Tank Description: CATCH TANK FOR TX-153 DIVERSION BOX

Solids Level: 21.40 Date: 9-84 Method: DOUGHNUT

Liquid Level: 21.50 Date: 8-84 Method: MANUAL TAPE

Estimated Supernatant Volume (gal): 27 GAL

Interim Stabilization Criteria: LESS THAN 400 GALLONS
(400 gallons or the volume of four inches of supernatant, whichever is greater)

( ) Cost/Benefit Analysis attached

Evaluation performed by: D.W. Fukumoto Date: 11/12/84

Checked by: [illegible] Date: 11/20/84

Disposition of Tank:

(X) Tank Interim Stabilized at 27 gallons of supernatant liquid

( ) Tank not Interim Stabilized; stabilization activities resumed

Approved by: [illegible] for Manager, TF&EPC — 11/20/84 Date

[illegible] Manager, TFS&O — 12-3-84 Date

[illegible] Program Manager — 12-4-84 Date

DISTRIBUTION: TF&EPC Tank File, Tank Farm Surveillance Analysis, Approval Signatures

H2-833

EVALUATION CALCULATIONS AND COMMENTS

Tank: TX-302 A

Tank Geometry:
TOP OF RISER TO BOTTOM OF TANK 32.15

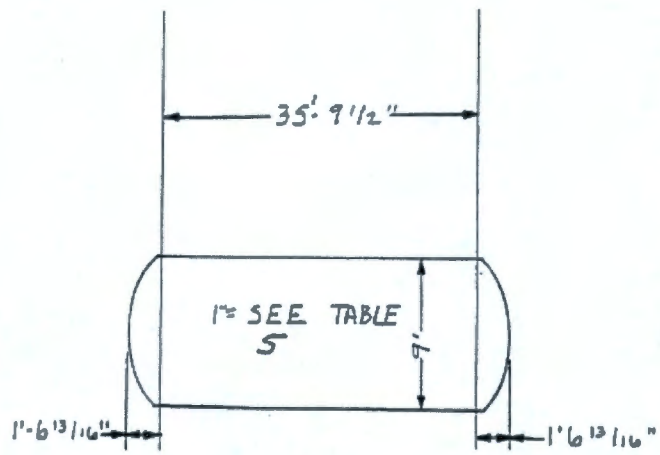

Calculations made by: D.W. Fitzpatrick

Checked by: [illegible]

TABLE V

Calibration of 9' Diameter, 35'9 1/2" long between rounded ends. Horizontal Tanks S-302, S-302-A, TX-302, TX-302-C, TX-302-B, UX-302-R, TY-302-A, B-302-B, BX-302-A, 311-ER SX-304

Feet	Inches	Gallons
	1	27
	2	74
	3	135
	4	205
	5	290
	6	375
	7	475
	8	580
	9	690
	10	805
	11	925
1	0	1050
	1	1185
	2	1320
	3	1460
	4	1600
	5	1750
	6	1900
	7	2060
	8	2220
	9	2380
	10	2550
	11	2720
2	0	2890
	1	3060
	2	3240
	3	3420
2	4	3600
	5	3790
	6	3970
	7	4160
	8	4350
	9	4540
	10	4740
	11	4930
3	0	5130
	1	5320
	2	5520
	3	5720
	4	5930
	5	6130
	6	6340
	7	6540
	8	6750
	9	6960
	10	7160
	11	7370
4	0	7580
	1	7790
	2	8000 45%
	3	8210
	4	8420
	5	8630
	6	8840 50%

Maximum Liquid Volume 8840 gallons
Tank Capacity 17684 gallons

4.11 241-TX-302-B

PCSACS Level Reading = 16.43-in
PCSACS Level Reading Date = 2014-05-20

Stabilization Evaluation Form: Undated, unsigned copy. Don't Say It … *Write It!* dated November 15, 1984 indicates tank was interim stabilized at that time.

Solids Level Reading = 14.30-in
Solids Level Reading Date = 1984-09

Calibration Table: ECN-630520, Rev. 0, *Incorporation of Catch Tank Specification Limits in SD-WM-TI-352, N1743*, page 12

14-in = 1344 gallons
15-in = 1486 gallons
16-in = 1632 gallons
17-in = 1782 gallons

$$PCSACS\ Level\ Reading = 16.43 - in = 1632\ gallons + 0.43\ x\ (1782 - 1632\ gallons)$$
$$Waste\ Volume = 1697\ gallons$$
$$Waste\ Volume = 1697\ gallons/(1000\ gallons/kilogallon)$$
$$Waste\ Volume = 1.7\ kilogallons$$

$$Solids\ Volume = 14.30 - in = 1344\ gallons + 0.30\ x\ (1782 - 1682\ gallons)$$
$$Solids\ Volume = 1344\ gallons + 0.30\ x\ (1782 - 1682\ gallons)$$
$$Solids\ Volume = 1374\ gallons$$

$$Liquid\ Volume = Waste\ Volume - Solids\ Volume$$
$$Liquid\ Volume = 1697 - 1374\ gallons$$
$$Liquid\ Volume = 323\ gallons$$

241-TX-302-B Calibration Table

ECN 630520, pg # 12 (48)

TANK(S) Group 2 (including 311-ER, 241-TX-302-C and 241-UX-302-A)
Date of Calibration: Calculated

NOMINAL TANK CAPACITY: 17,670 Gal. DIMENSIONS: 9' O.D.
50%: 8,835 Gal. 80%: 14,136 Gal. 35' 9½" Btwn. Ends
REF. DWG. #: H-2-2268 SHAPE/POSITION: Horiz/Rnd. Ends

LEVEL MEASUREMENT: ☐ Manual Tape ☐ FIC Transmitter Range:

in.	gal	in.	gal	in.	gal	in.	gal	in.	gal
1"	27	23"	2752	45"	6969	67"	11517	89"	15577
2"	75	24"	2924	46"	7174	68"	11719	90"	15734
3"	138	25"	3098	47"	7381	69"	11919	91"	15888
4"	211	26"	3275	48"	7587	70"	12119	92"	16038
5"	295	27"	3454	49"	7795	71"	12317	93"	16184
6"	386	28"	3636	50"	8002	72"	12514	94"	16326
7"	485	29"	3820	51"	8210	73"	12710	95"	16464
8"	591	30"	4005	52"	8418	74"	12904	96"	16597
9"	703	31"	4193	53"	8626	75"	13097	97"	16725
10"	821	32"	4382	54"	8835	76"	13288	98"	16849
11"	945	33"	4573	55"	9044	77"	13477	99"	16967
12"	1073	34"	4766	56"	9252	78"	13665	100"	17079
13"	1206	35"	4960	57"	9460	79"	13850	101"	17185
14"	1344	36"	5156	58"	9668	80"	14034	102"	17284
15"	1486	37"	5353	59"	9875	81"	14216	103"	17375
16"	1632	38"	5551	60"	10083	82"	14395	104"	17459
17"	1782	39"	5751	61"	10289	83"	14572	105"	17532
18"	1936	40"	5951	62"	10496	84"	14746	106"	17595
19"	2093	41"	6153	63"	10701	85"	14918	107"	17643
20"	2253	42"	6356	64"	10906	86"	15087	108"	17670
21"	2416	43"	6559	65"	11111	87"	15254		
22"	2583	44"	6764	66"	11314	88"	15417		

241-TX-302-B Stabilization Evaluation Form

6

STABILIZATION EVALUATION FORM

Tank: TX-302-B

Evaluation (see continuation page for calculations and additional comments):

(X) Tank history review completed

(X) Tank composition data reviewed

Tank Description: CATCH TANK

Solids Level: 14.30 Date: 9-84 Method: DOUGHNUT

Liquid Level: 14.75 Date: 8-84 Method: MANUAL TAPE

Estimated Supernatant Volume (gal): 290 GAL

Interim Stabilization Criteria: LESS THAN 400 GALLONS
(400 gallons or the volume of four inches of supernatant, whichever is greater)

( ) Cost/Benefit Analysis attached

Evaluation performed by: D.W. [illegible] Date: 11/16/89

Checked by: E.W. [illegible] Date: 11/16/89

Disposition of Tank:

(X) Tank Interim Stabilized at 290 gallons of supernatant liquid

( ) Tank not Interim Stabilized; stabilization activities resumed

Approved by:

Manager, TF&EPC — Date

Manager, TFS&O — Date

Program Manager — Date

DISTRIBUTION: TF&EPC Tank File, Tank Farm Surveillance Analysis, Approval Signatures

SK- 2-2419

SAMPLE-6921

EVALUATION CALCULATIONS AND COMMENTS

Tank: TX-302-B

Tank Geometry:

TOP OF RISER TO BOTTOM OF TANK 27.74

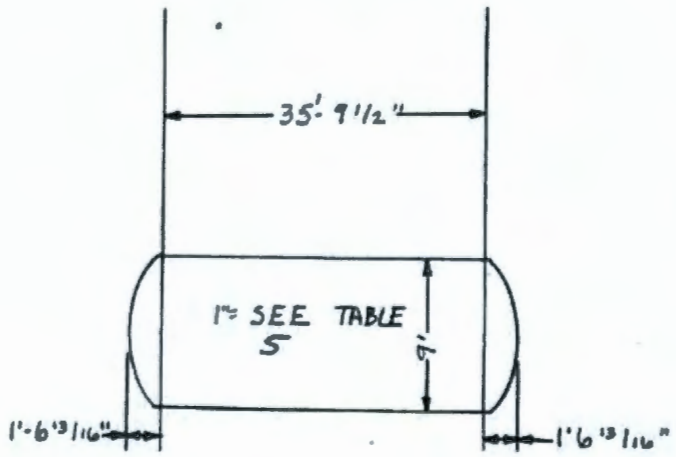

Calculations made by: _____

Checked by: _____

TABLE V

Calibration of 9' Diameter, 35'9 1/2" long between rounded ends.
Horizontal Tanks S-302, S-302-A, TX-302, TX-302-C, TX-302-B, UX-302-R, TY-302-A, B-302-B, BX-302-A, 311-ER SX-304

Feet	Inches	Gallons	Feet	Inches	Gallons
	1	27	2	4	3600
	2	74		5	3790
	3	135		6	3970
	4	205		7	4160
	5	290		8	4350
	6	375		9	4540
	7	475		10	4740
	8	580		11	4930
	9	690	3	0	5130
	10	805		1	5320
	11	925		2	5520
1	0	1050		3	5720
	1	1185		4	5930
	2	1320		5	6130
	3	1460		6	6340
	4	1600		7	6540
	5	1750		8	6750
	6	1900		9	6960
	7	2060		10	7160
	8	2220		11	7370
	9	2380	4	0	7580
	10	2550		1	7790
	11	2720		2	8000 45%
2	0	2890		3	8210
	1	3060		4	8420
	2	3240		5	8630
	3	3420		6	8840 50%

Maximum Liquid Volume 8840 gallons
Tank Capacity 17684 gallons

DON'T SAY IT --- *Write It!*

DATE 11-15-84

TO JOHN DOVEY FROM D. W. FUKUMOTO

RE: SX-302, TX-302-B, S-302B, TY-302B
JOHN - SX-302, ~~TX-302-B, S-302B, TY-302B~~ CATCH TANK IS NOW CONSIDERED STABILIZED. PLEASE PROCEED WITH ISOLATING THIS TANK. FOR TANK GEOMETRY SEE ATTACHED SHEETS.

THANK YOU

D. W. Fukumoto
D. W. FUKUMOTO

CL. BOB VAN METER RAU

"TO MAKE LIFE LAST, PUT SAFETY FIRST"

4.12 241-TX-302-B(R)

Waste Volume – No data

Tank was abandoned in place in 1954 per Drawing H-2-833 Note 3.

4.13 241-TX-302-C

PCSACS Level Reading = 3.9-in
PCSACS Level Reading Date = 2013-12-10

Calibration Table: ECN-630520, Rev. 0, *Incorporation of Catch Tank Specification Limits in SD-WM-TI-352, N1743*, page 12

3-in = 138 gallons
4-in = 211 gallons

$$PCSACS\ Level\ Reading = 3.9 - in = 138\ gallons + 0.9\ x\ (211 - 138\ gallons)$$
$$Waste\ Volume = 204\ gallons$$
$$Waste\ Volume = 204\ gallons/(1000\ gallons/kilogallon)$$
$$Waste\ Volume = 0.20\ kilogallons$$

241-TX-302-C Calibration Table

ECN 630520, bg # 12 (46)

TANK(S) Group 2 (including 311-ER, 241-TX-302-C and 241-UX-302-A)
Date of Calibration: Calculated

NOMINAL TANK CAPACITY: 17,670 Gal. DIMENSIONS: 9' O.D.
50%: 8,835 Gal. 80%: 14,136 Gal. 35' 9¼" Btwn. Ends
REF. DWG. #: H-2-2268 SHAPE/POSITION: Horiz/Rnd. Ends

LEVEL MEASUREMENT: ☐ Manual Tape ☐ FIC Transmitter Range:

in.	gal	in.	gal	in.	gal	in.	gal	in.	gal
1"	27	23"	2752	45"	6969	67"	11517	89"	15577
2"	75	24"	2924	46"	7174	68"	11719	90"	15734
3"	138	25"	3098	47"	7381	69"	11919	91"	15888
4"	211	26"	3275	48"	7587	70"	12119	92"	16038
5"	295	27"	3454	49"	7795	71"	12317	93"	16184
6"	386	28"	3636	50"	8002	72"	12514	94"	16326
7"	485	29"	3820	51"	8210	73"	12710	95"	16464
8"	591	30"	4005	52"	8418	74"	12904	96"	16597
9"	703	31"	4193	53"	8626	75"	13097	97"	16725
10"	821	32"	4382	54"	8835	76"	13288	98"	16849
11"	945	33"	4573	55"	9044	77"	13477	99"	16967
12"	1073	34"	4766	56"	9252	78"	13665	100"	17079
13"	1206	35"	4960	57"	9460	79"	13850	101"	17185
14"	1344	36"	5156	58"	9668	80"	14034	102"	17284
15"	1486	37"	5353	59"	9875	81"	14216	103"	17375
16"	1632	38"	5551	60"	10083	82"	14395	104"	17459
17"	1782	39"	5751	61"	10289	83"	14572	105"	17532
18"	1936	40"	5951	62"	10496	84"	14746	106"	17595
19"	2093	41"	6153	63"	10701	85"	14918	107"	17643
20"	2253	42"	6356	64"	10906	86"	15087	108"	17670
21"	2416	43"	6559	65"	11111	87"	15254		
22"	2583	44"	6764	66"	11314	88"	15417		

4.14 241-TX-302-X (241-TX-302-XB)

Stabilization Evaluation Form: 1985-06-20
Solids Level Reading = 3-in
Solids Level Reading Date = 1984-09
Waste Level ("Liquid Level") Reading = 6.5-in
Waste Level ("Liquid Level") Reading Date = 1984-08

Calibration Table: WRPS-0901391, *Tank Farm Catch Tank Calibrations*, page 12

6-in = 300 gallons
7-in = 379 gallons

$$Waste\ Volume = 6.5 - in = 300\ gallons + 0.50\ x\ (379 - 300\ gallons)$$
$$Waste\ Volume = 340\ gallons$$
$$Waste\ Volume = 340\ gallons/(1000\ gallons/kilogallon)$$
$$Waste\ Volume = 0.34\ kilogallons$$

$$Solids\ Volume = 3 - in = 103\ gallons$$

$$Liquid\ Volume = Waste\ Volume - Solids\ Volume$$
$$Liquid\ Volume = 340 - 103\ gallons$$
$$Liquid\ Volume = 237\ gallons$$

241-TX-302-X (241-TX-302-XB) Calibration Table

D.J. Washenfelder
Page 12
August 14, 2009

WRPS-0901391

Tanks: 241-TX-302XB

Date of Calibration: Calculated

NOMINAL TANK CAPACITY: 14519 Gal.

50%: 7249 Gal. 80%: 12474 Gal.

REF. DWG #: H-2-823

DIMENSIONS: 9'0" O.D.
32'4 3/4" Long
8'6" Radius

in.	gal	in.	gal	in.	gal	in.	gal	in.	gal
1	17	25	2525	49	6461	73	10583	97	13855
2	54	26	2672	50	6631	74	10745	98	13951
3	103	27	2821	51	6808	75	10905	99	14043
4	162	28	2972	52	6985	76	11063	100	14129
5	228	29	3125	53	7161	77	11220	101	14209
6	301	30	3280	54	7336	78	11375	102	14283
7	380	31	3437	55	7512	79	11528	103	14350
8	466	32	3595	56	7687	80	11680	104	14409
9	556	33	3755	57	7862	81	11829	105	14460
10	652	34	3916	58	8037	82	11976	106	14498
11	752	35	4079	59	8211	83	12122	107	14519
12	857	36	4243	60	8385	84	12264		
13	965	37	4408	61	8559	85	12405		
14	1078	38	4574	62	8732	86	12543		
15	1194	39	4742	63	8905	87	12678		
16	1314	40	4910	64	9077	88	12811		
17	1437	41	5080	65	9248	89	12940		
18	1563	42	5250	66	9418	90	13067		
19	1692	43	5421	67	9588	91	13190		
20	1825	44	5593	68	9756	92	13311		
21	1960	45	5766	69	9924	93	13427		
22	2097	46	5939	70	10091	94	13540		
23	2237	47	6112	71	10256	95	13649		
24	2380	48	6287	72	10420	96	13755		

241-TX-302-X (241-TX-302-XB) Stabilization Evaluation Form

STABILIZATION EVALUATION FORM

Tank: TX-302-XB

Evaluation (see continuation page for calculations and additional comments):

(X) Tank history review completed

(X) Tank composition data reviewed

Tank Description: CATCH TANK

Solids Level: 3" Date: 6-85 Method: DOUGHNUT

Liquid Level: 6½" Date: 6-85 Method: MANUAL TAPE

Estimated Supernatant Volume (gal): 272

Interim Stabilization Criteria: 400 gal.
(400 gallons or the volume of four inches of supernatant, whichever is greater)

( ) Cost/Benefit Analysis attached

Evaluation performed by: Allen T. Alstad Date: 6-18-85

Checked by: [illegible] Date: 6-18-85

Disposition of Tank:

(X) Tank Interim Stabilized at 272 gallons of supernatant liquid

( ) Tank not Interim Stabilized; stabilization activities resumed

Approved by: [illegible] Manager, TF&EPC — 6/18/85 Date

[illegible] Manager, TFS&O — 6/19/85 Date

R.D. Wojtanek Program Manager — 6/20/85 Date

DISTRIBUTION: TF&EPC Tank File, Tank Farm Surveillance Analysis, Approval Signatures

H-2-823

EVALUATION CALCULATIONS AND COMMENTS

Tank: TY-302-XB

Tank Geometry:
TOP OF RISER TO BOTTOM OF TANK 41.5

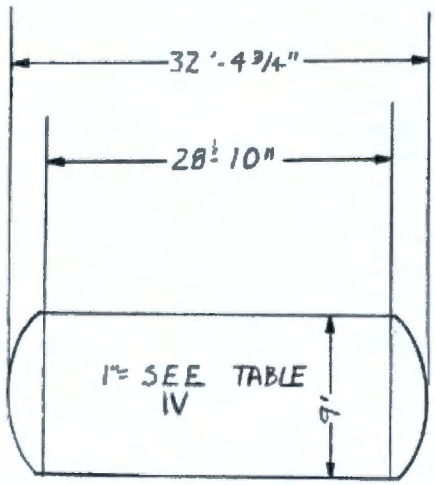

Calculations made by: Allen T. Alstad 6-18-85

Checked by: [illegible] 6/18/85

TABLE V

Calibration of 9' Diameter, 35'9 1/2" long between rounded ends.
Horizontal Tanks S-302, S-302-A, TX-302, TX-302-C, TX-302-B, UX-302-R, TY-302-A, B-302-B, BX-302-A, 311-ER SX-304

Feet	Inches	Gallons
	1	27
	2	74
	3	135
	4	205
	5	290
	6	375
	7	475
	8	580
	9	690
	10	805
	11	925
1	0	1050
	1	1185
	2	1320
	3	1460
	4	1600
	5	1750
	6	1900
	7	2060
	8	2220
	9	2380
	10	2550
	11	2720
2	0	2890
	1	3060
	2	3240
	3	3420
2	4	3600
	5	3790
	6	3970
	7	4160
	8	4350
	9	4540
	10	4740
	11	4930
3	0	5130
	1	5320
	2	5520
	3	5720
	4	5930
	5	6130
	6	6340
	7	6540
	8	6750
	9	6960
	10	7160
	11	7370
4	0	7580
	1	7790
	2	8000 45%
	3	8210
	4	8420
	5	8630
	6	8840 50%

Maximum Liquid Volume 8840 gallons
Tank Capacity 17684 gallons

4.15 241-TY-302-A

Stabilization Evaluation Form: 1985-06-27
Solids Level Reading = 6.75-in
Solids Level Reading Date = 1985-06-25
Waste Level ("Liquid Level") Reading = 6.75-in
Waste Level ("Liquid Level") Reading Date = 1985-06-25

Calibration Table: ECN-630520, *Incorporation of Catch Tank Specification Limits in SD-WM--TI-352, N1743*, page 12

6-in = 386 gallons
7-in = 485 gallons

$$Waste\ Volume = 6.75 - in = 386\ gallons + 0.75\ x\ (485 - 386\ gallons)$$
$$Waste\ Volume = 460\ gallons$$
$$Waste\ Volume = 460\ gallons/(1000\ gallons/kilogallon)$$
$$Waste\ Volume = 0.46\ kilogallons$$

$$Solids\ Volume = 6.75 - in = 460\ gallons$$

$$Liquid\ Volume = Waste\ Volume - Solids\ Volume$$
$$Liquid\ Volume = 460 - 460\ gallons$$
$$Liquid\ Volume = 0\ gallons$$

241-TY-302-A Calibration Table

ECN 630520, pg # 12 (48)

TANK(S) Group 2 (including 311-ER, 241-TX-302-C and 241-UX-302-A)
Date of Calibration: Calculated

NOMINAL TANK CAPACITY: 17,670 Gal. DIMENSIONS: 9' O.D.
50%: 8,835 Gal. 80%: 14,136 Gal. 35' 9½" Btwn. Ends
REF. DWG. #: H-2-2268 SHAPE/POSITION: Horiz/Rnd. Ends

LEVEL MEASUREMENT: ☐ Manual Tape ☐ FIC Transmitter Range:

in.	gal	in.	gal	in.	gal	in.	gal	in.	gal
1"	27	23"	2752	45"	6969	67"	11517	89"	15577
2"	75	24"	2924	46"	7174	68"	11719	90"	15734
3"	138	25"	3098	47"	7381	69"	11919	91"	15888
4"	211	26"	3275	48"	7587	70"	12119	92"	16038
5"	295	27"	3454	49"	7795	71"	12317	93"	16184
6"	386	28"	3636	50"	8002	72"	12514	94"	16326
7"	485	29"	3820	51"	8210	73"	12710	95"	16464
8"	591	30"	4005	52"	8418	74"	12904	96"	16597
9"	703	31"	4193	53"	8626	75"	13097	97"	16725
10"	821	32"	4382	54"	8835	76"	13288	98"	16849
11"	945	33"	4573	55"	9044	77"	13477	99"	16967
12"	1073	34"	4766	56"	9252	78"	13665	100"	17079
13"	1206	35"	4960	57"	9460	79"	13850	101"	17185
14"	1344	36"	5156	58"	9668	80"	14034	102"	17284
15"	1486	37"	5353	59"	9875	81"	14216	103"	17375
16"	1632	38"	5551	60"	10083	82"	14395	104"	17459
17"	1782	39"	5751	61"	10289	83"	14572	105"	17532
18"	1936	40"	5951	62"	10496	84"	14746	106"	17595
19"	2093	41"	6153	63"	10701	85"	14918	107"	17643
20"	2253	42"	6356	64"	10906	86"	15087	108"	17670
21"	2416	43"	6559	65"	11111	87"	15254		
22"	2583	44"	6764	66"	11314	88"	15417		

STABILIZATION EVALUATION FORM

Tank: TY-302-A

Evaluation (see continuation page for calculations and additional comments):

(X) Tank history review completed

(X) Tank composition data reviewed

Tank Description: CATCH TANK

Solids Level: 6.75" Date: 6-25-85 Method: DOUGHNUT - REEL TAPE

Liquid Level: 6.75" Date: 6-25-85 Method: MANUAL TAPE

Estimated Supernatant Volume (gal): Ø gallons

Interim Stabilization Criteria: Ø inches
(400 gallons or the volume of four inches of supernatant, whichever is greater)

( ) Cost/Benefit Analysis attached

Evaluation performed by: Allen T. Alstad Date: 6-26-85

Checked by: [illegible] Date: 6-26-85

Disposition of Tank:

(X) Tank Interim Stabilized at Ø gallons of supernatant liquid

( ) Tank not Interim Stabilized; stabilization activities resumed

Approved by: [illegible] Manager, TF&EPC — 6/26/85 Date

[illegible] Manager, TFS&O — 6/26/85 Date

R D Wittland Program Manager — 6/27/85 Date

DISTRIBUTION: TF&EPC Tank File, Tank Farm Surveillance Analysis, Approval Signatures

H-2-2233

SAMPLE # 6929

EVALUATION CALCULATIONS AND COMMENTS

Tank: TY-302-A

Tank Geometry:

TOP OF RISER TO BOTTOM OF TANK 32.25

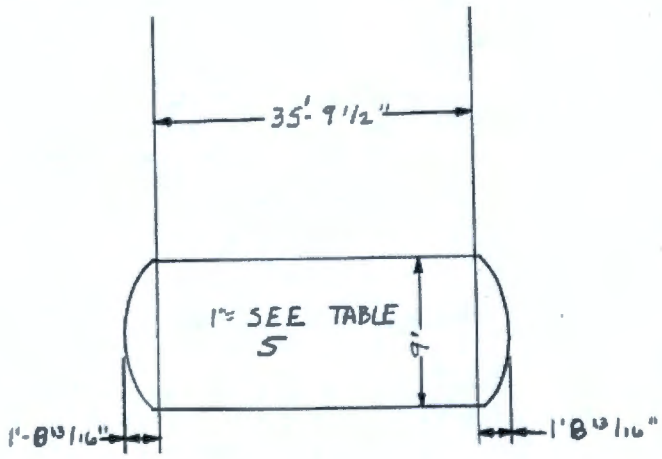

Calculations made by: Allen T. Alstad 6-26-85

Checked by: E. Weiss 6-26-85

TABLE V

Calibration of 9' Diameter, 35'9 1/2" long between rounded ends.
Horizontal Tanks S-302, S-302-A, TX-302, TX-302-C, TX-302-B, UX-302-R, TY-302-A, B-302-B, BX-302-A, 311-ER SX-304

Feet	Inches	Gallons	Feet	Inches	Gallons
	1	27	2	4	3600
	2	74		5	3790
	3	135		6	3970
	4	205		7	4160
	5	290		8	4350
	6	375		9	4540
	7	475		10	4740
	8	580		11	4930
	9	690	3	0	5130
	10	805		1	5320
	11	925		2	5520
1	0	1050		3	5720
	1	1185		4	5930
	2	1320		5	6130
	3	1460		6	6340
	4	1600		7	6540
	5	1750		8	6750
	6	1900		9	6960
	7	2060		10	7160
	8	2220		11	7370
	9	2380	4	0	7580
	10	2550		1	7790
	11	2720		2	8000 45%
2	0	2890		3	8210
	1	3060		4	8420
	2	3240		5	8630
	3	3420		6	8840 50%

Maximum Liquid Volume 8840 gallons
Tank Capacity 17684 gallons

4.16 241-TY-302-B

Stabilization Evaluation Form: Undated, unsigned copy. Don't Say It … *Write It!* dated November 15, 1984 indicates tank was interim stabilized at that time.
Solids Level Reading = 0-in
Solids Level Reading Date = 1984-08
Waste Level ("Liquid Level") Reading = 0-in
Waste Level ("Liquid Level") Reading Date = 1984-08

Calibration Table: SD-RE-TI-057 Rev. 0 *Tank Farms Catch Tanks – Calibration Tables*, Table 6

0-in = 0 gallons

$$Waste\ Volume = 0 - in = 0\ gallons$$
$$Waste\ Volume = 0\ gallons/(1000\ gallons/kilogallon)$$
$$Waste\ Volume = < 0.10\ kilogallons$$

$$Solids\ Volume = 0 - in = 0\ gallons$$

$$Liquid\ Volume = Waste\ Volume - Solids\ Volume$$
$$Liquid\ Volume = 0\ gallons$$
$$Liquid\ Volume = 0\ gallons$$

241-TY-302-B Calibration Table

SD-RE-TI-057 0-0 10

TABLE 6. Tanks TY-302-B, S-302-B, and TX-302-X.

Feet	Inches	Gallons	Feet	Inches	Gallons
	1	40	2	4	2,915
	2	85		5	3,080
	3	108		6	3,221
	4	200		7	3,385
	5	260		8	3,520
	6	305		9	3,682
	7	401		10	3,860
	8	490		11	4,000
	9	588	3	0	4,156
	10	670		1	4,320
	11	760		2	4,485
1	0	853		3	4,640
	1	960		4	4,825
	2	1,075		5	4,980
	3	1,185		6	5,133
	4	1,286		7	5,300
	5	1,410		8	5,441
	6	1,546		9	5,632
	7	1,650		10	5,780
	8	1,805		11	5,912
	9	1,935	4	0	6,117
	10	2,030		1	6,275
	11	2,185		2	6,430
2	0	2,344		3	6,645
	1	2,470		4	6,800
	2	2,610		5	6,980
	3	2,775		6	7,157

NOTE:
1. Calibration of 9 ft diamater, 32 ft 4 in. long between rounded ends. (Horizontal)
2. Maximum liquid volume - 7,157 gal.
3. Tank capacity - 14,314 gal.

241-TY-302-B Stabilization Evaluation Form

6

STABILIZATION EVALUATION FORM

Tank: TY-302-B

Evaluation (see continuation page for calculations and additional comments):

(X) Tank history review completed

(X) Tank composition data reviewed

Tank Description: CATCH TANK

Solids Level: 0 Date: 8-84 Method: DOUGHNUT

Liquid Level: 0 Date: 8-84 Method: MANUAL TAPE

Estimated Supernatant Volume (gal): 0 GAL

Interim Stabilization Criteria: LESS THAN 400 GALLONS LIQUID
(400 gallons or the volume of four inches of supernatant, whichever is greater)

( ) Cost/Benefit Analysis attached

Evaluation performed by: D.W. Fukunaka Date: 11/16/84

Checked by: [illegible] Date: 11/16/84

Disposition of Tank:

(X) Tank Interim Stabilized at 0 gallons of supernatant liquid

( ) Tank not Interim Stabilized; stabilization activities resumed

Approved by:

Manager, TF&EPC — Date

Manager, TFS&O — Date

Program Manager — Date

DISTRIBUTION: TF&EPC Tank File, Tank Farm Surveillance Analysis, Approval Signatures

H-2-2234

7

EVALUATION CALCULATIONS AND COMMENTS

Tank: TY-302-B

Tank Geometry:
TOP OF RISER TO BOTTOM OF TANK 37.53

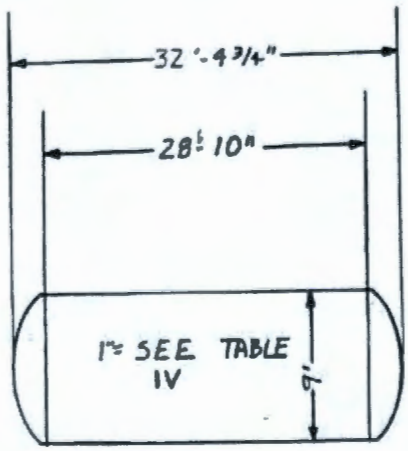

Calculations made by: _____

Checked by: _____

TABLE IV

Calibration of 9' Diameter, 32'4" Long between rounded ends.
Horizontal tanks TY-302-B S-302-B TX-302-X.

Feet	Inches	Gallons	Feet	Inches	Gallons
	1	40	2	4	2915
	2	85		5	3080
	3	108		6	3221
	4	200		7	3385
	5	260		8	3520
	6	305		9	3682
	7	401		10	3860
	8	490		11	4000
	9	588	3	0	4156
	10	670		1	4320
	11	760		2	4485
1	0	853		3	4640
	1	960		4	4825
	2	1075		5	4980
	3	1185		6	5133
	4	1286		7	5300
	5	1410		8	5441
	6	1546		9	5632
	7	1650		10	5780
	8	1805		11	5912
	9	1935	4	0	6117
	10	2030		1	6275
	11	2185		2	6430
2	0	2344		3	6645
	1	2470		4	6800
	2	2610		5	6980
	3	2775		6	7157

Maximum Liquid Volume 7157 Gallons
Tank Capacity 14314 Gallons

DON'T SAY IT --- *Write It!*

DATE 11-15-84

TO JOHN DOVEY FROM D. W. FUKUMOTO

RE: SX-302, TX-302-B, S-302B, TY-302B
JOHN - SX-302, ~~TX-302-B, S-302B, TY-302B~~ CATCH TANK IS NOW CONSIDERED STABILIZED. PLEASE PROCEED WITH ISOLATING THIS TANK. FOR TANK GEOMETRY SEE ATTACHED SHEETS.

THANK YOU

D. W. Fukumoto
D. W. FUKUMOTO

CL. BOB VAN METER RAV

"TO MAKE LIFE LAST, PUT SAFETY FIRST"

4.17 241-U-301 (241-U-301-B)

PCSACS Level Reading = 7.19-in
PCSACS Level Reading Date = 2013-10-18

Calibration Table: ECN-630520, *Incorporation of Catch Tank Specification Limits in SD-WM-TI-352, N1743*, page 13

7-in = 1371 gallons
8-in = 1567 gallons

$$PCSACS\ Level\ Reading = 7.19 - in = 1371\ gallons + 0.19\ x\ (1567 - 1371\ gallons)$$
$$Waste\ Volume = 1408\ gallons$$
$$Waste\ Volume = 1408\ gallons/(1000\ gallons/kilogallon)$$
$$Waste\ Volume = 1.4\ kilogallons$$

241-U-301 (241-U-301-B) Calibration Table

ECN 630520, pg #13 (47)

TANK(S) Group 3: 301's, 361's B, C, T, U (including 241-U-301-B)
Date of Calibration: Calculated

NOMINAL TANK CAPACITY: 36,430 Gal. DIMENSIONS: 20' O.D.
50%: 18,215 Gal. 80%: 29,144 Gal. 15'6" High @ Overflow
REF. DWG. #: W-72903 SHAPE/POSITION: Vert/Flat Btm.

LEVEL MEASUREMENT: ☐ Manual Tape ☐ FIC Transmitter Range:

in.	gal	in.	gal	in.	gal	in.	gal	in.	gal
1"	196	25"	4897	49"	9597	73"	14298	97"	18999
2"	392	26"	5092	50"	9793	74"	14494	98"	19194
3"	588	27"	5288	51"	9989	75"	14690	99"	19390
4"	783	28"	5484	52"	10185	76"	14886	100"	19586
5"	979	29"	5680	53"	10381	77"	15081	101"	19782
6"	1175	30"	5876	54"	10577	78"	15277	102"	19978
7"	1371	31"	6072	55"	10772	79"	15473	103"	20174
8"	1567	32"	6268	56"	10968	80"	15669	104"	20370
9"	1763	33"	6463	57"	11164	81"	15865	105"	20566
10"	1959	34"	6659	58"	11360	82"	16061	106"	20761
11"	2154	35"	6855	59"	11556	83"	16257	107"	20957
12"	2350	36"	7051	60"	11752	84"	16452	108"	21153
13"	2546	37"	7247	61"	11948	85"	16648	109"	21349
14"	2742	38"	7443	62"	12143	86"	16844	110"	21545
15"	2938	39"	7639	63"	12339	87"	17040	111"	21741
16"	3134	40"	7834	64"	12535	88"	17236	112"	21937
17"	3330	41"	8030	65"	12731	89"	17432	113"	22132
18"	3526	42"	8226	66"	12927	90"	17628	114"	22328
19"	3721	43"	8422	67"	13123	91"	17823	115"	22524
20"	3917	44"	8618	68"	13319	92"	18019	116"	22720
21"	4113	45"	8814	69"	13514	93"	18215	117"	22916
22"	4309	46"	9010	70"	13710	94"	18411	118"	23112
23"	4505	47"	9206	71"	13906	95"	18607	119"	23308
24"	4701	48"	9401	72"	14102	96"	18803	120+	+196/in

Tank sides are straight @ approx. 196 gal/inch.

4.18 241-UX-302-A

Tank 241-UX-302 was declared leaking March 11, 2006 (RPP-RPT-29711, Rev. 0, *Tank 241-UX-302A Leak Assessment Report*). Pumping of the remaining free liquid from the tank was completed October 25, 2006 (Letter 06-TOD-090, R. J. Schepens, DOE-ORP to J. A. Hedges, Washington State Department of Ecology, *Notification of Completion of Pumping Liquids from Catch Tank 241-UX-302A and Start of Evaporation of Liquid from Catch Tank 241-ER-311*, dated November 1, 2006). An estimated 75 to 110 gallons of sludge, and 10 gallons of free liquid remained in the tank (RPP-RPT-31779, Rev. 0, *241-UX-302A Catch Tank Liquid Mitigation Completion Report*). The tank was pumped again in 2009 (RPP-RPT-42789, Rev. 0, *Completion of Removal of Pumpable Liquid from 241-UX-302A*) and 2012 (Work Package TFC-WO-11-5930 WCN-2). The tank is subject to continuing liquid intrusion.

PCSACS Level Reading = 6.57-in
PCSACS Level Reading Date = 2013-12-05

Calibration Table: ECN-630520, *Incorporation of Catch Tank Specification Limits in SD-WM-TI-352, N1743*, page 12

6-in = 386 gallons
7-in = 485 gallons

$$PCSACS\ Level\ Reading = 6.57 - in = 386\ gallons + 0.57\ x\ (485 - 386\ gallons)$$
$$Waste\ Volume = 442\ gallons$$
$$Waste\ Volume = 442\ gallons/(1000\ gallons/kilogallon)$$
$$Waste\ Volume = 0.44\ kilogallons$$

241-UX-302-A Calibration Table

ECN 630520, bg #12 (45)

TANK(S) Group 2 (including 311-ER, 241-TX-302-C and 241-UX-302-A)
Date of Calibration: Calculated

NOMINAL TANK CAPACITY: 17,670 Gal. DIMENSIONS: 9' O.D.
50%: 8,835 Gal. 80%: 14,136 Gal. 35' 9½" Btwn. Ends
REF. DWG. #: H-2-2268 SHAPE/POSITION: Horiz/Rnd. Ends

LEVEL MEASUREMENT: ☐ Manual Tape ☐ FIC Transmitter Range:

in.	gal	in.	gal	in.	gal	in.	gal	in.	gal
1"	27	23"	2752	45"	6969	67"	11517	89"	15577
2"	75	24"	2924	46"	7174	68"	11719	90"	15734
3"	138	25"	3098	47"	7381	69"	11919	91"	15888
4"	211	26"	3275	48"	7587	70"	12119	92"	16038
5"	295	27"	3454	49"	7795	71"	12317	93"	16184
6"	386	28"	3636	50"	8002	72"	12514	94"	16326
7"	485	29"	3820	51"	8210	73"	12710	95"	16464
8"	591	30"	4005	52"	8418	74"	12904	96"	16597
9"	703	31"	4193	53"	8626	75"	13097	97"	16725
10"	821	32"	4382	54"	8835	76"	13288	98"	16849
11"	945	33"	4573	55"	9044	77"	13477	99"	16967
12"	1073	34"	4766	56"	9252	78"	13665	100"	17079
13"	1206	35"	4960	57"	9460	79"	13850	101"	17185
14"	1344	36"	5156	58"	9668	80"	14034	102"	17284
15"	1486	37"	5353	59"	9875	81"	14216	103"	17375
16"	1632	38"	5551	60"	10083	82"	14395	104"	17459
17"	1782	39"	5751	61"	10289	83"	14572	105"	17532
18"	1936	40"	5951	62"	10496	84"	14746	106"	17595
19"	2093	41"	6153	63"	10701	85"	14918	107"	17643
20"	2253	42"	6356	64"	10906	86"	15087	108"	17670
21"	2416	43"	6559	65"	11111	87"	15254		
22"	2583	44"	6764	66"	11314	88"	15417		

4.19 241 (216) -Z-8

The waste level for tank 241 (216) –Z-8 is reported in *Final Report: 216*-87250-SWES-91-022 *Transfer*, J. V. Panesko, (undated). The report states 7,600 gallons of waste and 5,000 gallons of flush water were transferred from the tank leaving about 7-in (500 gallons) of sludge on the tank floor. The final transfer to tank 241-TX-109 completed October 19, 1974. The report refers to the tank by its original alphanumeric, "216-Z-8".

Calibration Table: WRPS-0901391, *Tank Farm Catch Tank Calibrations*, page 15

$$Waste\ Volume = 500\ gallons$$
$$Waste\ Volume = 500\ gallons/(1000\ gallons/kilogallon)$$
$$Waste\ Volume = 0.50\ kilogallons$$

241 (216) -Z-8 Calibration Table

D.J. Washenfelder
Page 15
August 14, 2009

WRPS-0901391

Tanks: 241-Z-8

Date of Calibration: Calculated

NOMINAL TANK CAPACITY: 15552 Gal.

50%: 7606 Gal. 80%: 13855 Gal.

REF. DWG #: H-2-16653

DIMENSIONS: 8'0" O.D.
40'0" Long
8'6" Radius

in.	gal	in.	gal	in.	gal	in.	gal	in.	gal
1	44	21	2579	41	6459	61	10598	81	14155
2	100	22	2753	42	6667	62	10798	82	14299
3	170	23	2930	43	6875	63	10995	83	14438
4	250	24	3110	44	7083	64	11192	84	14571
5	340	25	3293	45	7291	65	11386	85	14700
6	438	26	3478	46	7501	66	11579	86	14823
7	543	27	3665	47	7711	67	11769	87	14939
8	656	28	3854	48	7920	68	11958	88	15049
9	775	29	4046	49	8129	69	12144	89	15152
10	900	30	4239	50	8338	70	12328	90	15247
11	1030	31	4434	51	8547	71	12510	91	15334
12	1166	32	4631	52	8755	72	12689	92	15410
13	1307	33	4829	53	8963	73	12865	93	15475
14	1452	34	5029	54	9171	74	13038	94	15525
15	1602	35	5230	55	9377	75	13208	95	15552
16	1755	36	5432	56	9583	76	13375		
17	1913	37	5636	57	9789	77	13539		
18	2074	38	5840	58	9993	78	13699		
19	2239	39	6046	59	10196	79	13855		
20	2407	40	6252	60	10398	80	14007		

4.20 242-S TK-C-100

After deactivation of 242-S Evaporator, about 8,000 gallons were left in tank TK-C-100 for a planned caustic addition to tank SY-102. The caustic addition did not occur, and the transfer route to tank SY-102 was blanked in the 241-SY-02E pit (Email communication, D. P. Niebuhr, *Re: Tank C-100 As-Left Condition*, dated October 20, 2008).

$$Waste\ Volume = 8{,}000\ gallons$$
$$Waste\ Volume = 8000\ gallons/(1000\ gallons/kilogallon)$$
$$Waste\ Volume = 8.0\ kilogallons$$

Calibration Table: ECN-630520, Rev. 0, *Incorporation of Catch Tank Specification Limits in SD-WM-TI-352, N1743* page 10

Tank 244-A calibration table from ECN-630520, Page 10 applies to TK-C-100 for direct measurement. However, weight factor instrumentation was used during operation without specific gravity correction since the condensate was essentially water (H-; the length of the weight factor leg from the face of Nozzle H to its termination is 17-ft 2-1/2-in (; the vertical distance from termination of weight factor leg located in tank Nozzle H to the center of dished bottom would need to be determined before using ECN-630520, Page 10.

242-S TK-C-100 Calibration Table

ECN 630220, pg #10

~~43~~ 44

TANK(S) 244-A Catch Tank
Date of Calibration: Calculated

NOMINAL TANK CAPACITY: 18,800 Gal. DIMENSIONS: 14' O.D.
50%: 9,400 Gal. 80%: 15,040 Gal. 14' Btwn. Ends
REF. DWG. #: H-2-30229, H-2-40705 SHAPE/POSITION: Vert/Rnd Ends

LEVEL MEASUREMENT: ☐ Manual Tape ☐ FIC Transmitter Range:

in.	gal	in.	gal	in.	gal	in.	gal	in.	gal
1"	2	25"	1153	49"	3450	73"	5753	97"	8057
2"	8	26"	1244	50"	3546	74"	5849	98"	8153
3"	18	27"	1339	51"	3642	75"	5945	99"	8249
4"	31	28"	1435	52"	3738	76"	6041	100"	8345
5"	48	29"	1531	53"	3834	77"	6137	101"	8441
6"	70	30"	1627	54"	3930	78"	6233	102"	8537
7"	94	31"	1722	55"	4026	79"	6329	103"	8633
8"	123	32"	1818	56"	4122	80"	6425	104"	8728
9"	155	33"	1914	57"	4218	81"	6521	105"	8824
10"	191	34"	2010	58"	4314	82"	6617	106"	8920
11"	231	35"	2106	59"	4410	83"	6713	107"	9016
12"	274	36"	2202	60"	4506	84"	6809	108"	9112
13"	321	37"	2298	61"	4602	85"	6905	109"	9208
14"	371	38"	2394	62"	4698	86"	7001	110"	9304
15"	425	39"	2490	63"	4794	87"	7097	111"	9400
16"	483	40"	2586	64"	4890	88"	7193	112"	9496
17"	544	41"	2682	65"	4986	89"	7289	113"	9592
18"	608	42"	2778	66"	5082	90"	7385	114"	9688
19"	676	43"	2874	67"	5177	91"	7481	115"	9784
20"	747	44"	2970	68"	5273	92"	7577	116"	9880
21"	822	45"	3066	69"	5369	93"	7673	117"	9976
22"	900	46"	3162	70"	5465	94"	7769	118"	10072
23"	981	47"	3258	71"	5561	95"	7865	119"	10168
24"	1065	48"	3354	72"	5657	96"	7961	120+	+96/in

NOTE: Above 27", tank sides are straight at 96 gal/inch.

Washenfelder, Dennis J

From: Niebuhr, Daniel P (Dan)
Sent: Monday, October 20, 2008 7:44 AM
To: Tucker, Ronald P
Cc: Fish, Michael A; Gauck, Gregory J; Washenfelder, Dennis J
Subject: RE: Tank C-100 As-Left Condition

Items:

1) The tank is a vertical cylinder, not a horizontal one as stated in the attachment.
2) In 1991 when the fire main flooded the process backside of 242-S, (approx 50,000 gallons at a depth of 10 feet) water leaked into the condenser room through small penetrations in the wall (presumed to be bolt holes or other such things. I saw it....looked like a lot of little fountains.)
3) The sump pump in the condenser room put this liquid in the C-100 tank to the point of over flow.
4) Water continued to accumulate in the condenser room (had to deenergize the sump pump because it was pumping water into the tank at the same time the tank was overflowing...endless loop).
5) The C-100 pump-out pump is located on the floor of the condenser room, and was subsequently submerged to a depth of about 3 feet.
6) A Sandpiper air operated pump was brought in to dewater the condenser room floor, tied it into the process piping of the condenser room and water was removed to 102-SY.
7) Condenser room was dried out, C-100 pump motor inspected and returned to service.
8) C-100 volume was used as a starting siphon to get flow from the pump room steam jet when it gassed out, then it was turned off to conserve siphon inventory.
9) At the end of the pump room pumpout, 8,000 gallons were retained in C-100 for a planned caustic addition to 102-SY
10) The caustic addition never happened and the flowpaths to 102-SY were subsequently blanked off at SY-02E

two cents
Dan Niebuhr

From: Tucker, Ronald P
Sent: Thursday, October 16, 2008 4:14 PM
To: Niebuhr, Daniel P (Dan); Washenfelder, Dennis J
Cc: Fish, Michael A; Gauck, Gregory J
Subject: FW: Tank C-100 As-Left Condition

It is interesting to note that none of these documents discuss the fire main break and subsequent overflow of the C-100 tank that occurred in about 1991. I wonder if there is an occurrence report or something that documents that event.

Ron

From: Washenfelder, Dennis J
Sent: Wednesday, October 15, 2008 4:33 PM
To: Tucker, Ronald P
Subject: Tank C-100 As-Left Condition

Ron:

The draft MUST document had less information that I predicted. However, one of the references indicates 8 - 9 kgal present in C-100. Another reference gives a general idea of how the tank was laid up.

I tried to find C-100 in the WIDS database, because there may be a reference to sample data, but I was defeated. I'll try again after I figure out how to use the new version.

Dennis

1

4.21 242-T-135

No waste level data were recovered from records archive.

Waste Volume – No data

4.22 242-TA-R1

On August 1, 2002 video surveillance revealed Tank 242-TA-R1 was floating off its foundation due to liquid accumulating in the vault estimated to be 10-ft deep at the time. The vault was pumped November 26, 2003 (Final Occurrence Report EM-RL-CHG-TANKFARM-2002-0083, *Video Surveillance Reveals Catch Tank TA-R1 Floating Off of Its Foundation at 245-TA Vault*, dated October 17, 2002).

No waste level data were recovered from records archive.

Waste Volume – No data

242-TA-R1 Isolation

Isolation activities for 242-TA-R1 and the 242-TA vault sump are described in RHO-CD-1410, *242-T Evaporator Facility Shutdown/Standby Plan*, April, 1981. Both High-Low Acid Salt Waste (HLSW) receipt lines from 234-5-Z Building, their encasement drains, and the feed line and feed overflow return line between 242-TA-R1 and the 242-T feed accumulation tank TK-B1 were blanked; weight factor instrumentation disconnected; transfer pump and 242-TA vault sump pump electrically disconnected and sump pump discharge line blanked. The 242-TA Vault cover was fiberglassed to prevent rainwater and snowmelt intrusion. The 242-TA vault weight factor instrumentation remained active to detect water intrusion (RHO-CD-1410, pages 8, 14, 15).

4.23 242-TA SUMP

On August 1, 2002 video surveillance revealed Tank 242-TA-R1 was floating off its foundation due to liquid accumulating in the vault estimated to be 10-ft deep at the time. The vault was pumped November 26, 2003 (Final Occurrence Report EM-RL-CHG-TANKFARM-2002-0083, *Video Surveillance Reveals Catch Tank TA-R1 Floating Off of Its Foundation at 245-TA Vault*, dated October 17, 2002).

PCSACS Level Reading = 0-in
PCSACS Level Reading Date = 2010-09-24

There is no calibration table for this sump. The sump is 24-in by 18-in by 14-1/2-in deep (Drawing H-2-27275). Each 1-in increase in waste level elevation between 0-in and 14-1/2-in corresponds to a 1.87 gallon increase.

$$Waste\ Volume/Vertical\ inch = (24 - in\ x\ 18 - in\ x\ 1 - in\ Deep)/(12\ inches/ft)^3\ x\ 7.48\ gallons/ft^3$$
$$Waste\ Volume/Vertical\ inch = 1.87\ gallons$$

$$PCSACS\ Level\ Reading = 0 - in = 0\ gallons$$
$$Waste\ Volume = 0\ gallons/(1000\ gallons/kilogallon)$$
$$Waste\ Volume = 0\ kilogallons$$
$$Waste\ Volume = < 0.10\ kilogallons$$

4.24 243-S-TK-1

No waste level data were recovered from records archive.

Calibration Table: WRPS-0901391, *Tank Farm Catch Tank Calibrations*, page 17

$$Waste\ Volume - No\ data$$

243-S-TK-1 Calibration Table

D.J. Washenfelder
Page 17
August 14, 2009

WRPS-0901391

Tank: 243-S-Tk-1

Date of Calibration: Calculated

NOMINAL TANK CAPACITY: 520 Gal.

DIMENSIONS: 4' 0 5/8" O.D.
6' 6 5/8" Long

50%: 257 Gal. 80%: 451 Gal.

REF. DWG #: H-2-72885

in.	gal	in.	gal	in.	gal	in.	gal	in.	gal
1	2	11	80	21	213	31	357	41	477
2	4	12	92	22	227	32	371	42	486
3	9	13	104	23	242	33	384	43	494
4	15	14	117	24	257	34	397	44	502
5	22	15	130	25	271	35	410	45	508
6	30	16	143	26	286	36	422	46	514
7	39	17	156	27	300	37	434	47	518
8	48	18	170	28	315	38	446	48	520
9	58	19	184	29	329	39	457		
10	69	20	198	30	343	40	467		

4.25 244-S-TK

PCSACS Level Reading = 33-in
PCSACS Level Reading Date = 2014-04-07

Calibration Table: ECN-630520, Rev. 0, *Incorporation of Catch Tank Specification Limits in SD-WM-TI-352, N1743*, page 16

$$PCSACS\ Level\ Reading = 33 - in = 3636\ gallons$$
$$Waste\ Volume = 3636\ gallons/(1000\ gallons/kilogallon)$$
$$Waste\ Volume = 3.6\ kilogallons$$

244-S-TK Calibration Table

ECN 630510, pg # 1-6

~~49~~ 50

TANK(S) 244-S Catch Tank
Date of Calibration: Calculated

NOMINAL TANK CAPACITY: 22,840 Gal. DIMENSIONS: 15' O.D.
50%: 11,420 Gal. 80%: 18,272 Gal. 15'5" High
REF. DWG. #: H-2-71049 SHAPE/POSITION: Vert/Flat Btm.

LEVEL MEASUREMENT: ☐ Manual Tape ☐ FIC Transmitter Range:

in.	gal	in.	gal	in.	gal	in.	gal	in.	gal
1"	110	25"	2754	49"	5398	73"	8043	97"	10687
2"	220	26"	2864	50"	5509	74"	8153	98"	10797
3"	331	27"	2975	51"	5619	75"	8263	99"	10907
4"	441	28"	3085	52"	5729	76"	8373	100"	11017
5"	551	29"	3195	53"	5839	77"	8483	101"	11127
6"	661	30"	3305	54"	5949	78"	8593	102"	11238
7"	771	31"	3415	55"	6059	79"	8704	103"	11348
8"	881	32"	3526	56"	6170	80"	8814	104"	11458
9"	992	33"	3636	57"	6280	81"	8924	105"	11568
10"	1102	34"	3746	58"	6390	82"	9034	106"	11678
11"	1212	35"	3856	59"	6500	83"	9144	107"	11788
12"	1322	36"	3966	60"	6610	84"	9254	108"	11899
13"	1432	37"	4076	61"	6721	85"	9365	109"	12009
14"	1542	38"	4187	62"	6831	86"	9475	110"	12119
15"	1653	39"	4297	63"	6941	87"	9585	111"	12229
16"	1763	40"	4407	64"	7051	88"	9695	112"	12339
17"	1873	41"	4517	65"	7161	89"	9805	113"	12449
18"	1983	42"	4627	66"	7271	90"	9916	114"	12560
19"	2093	43"	4737	67"	7382	91"	10026	115"	12670
20"	2203	44"	4848	68"	7492	92"	10136	116"	12780
21"	2314	45"	4958	69"	7602	93"	10246	117"	12890
22"	2424	46"	5068	70"	7712	94"	10356	118"	13000
23"	2534	47"	5178	71"	7822	95"	10466	119"	13111
24"	2644	48"	5288	72"	7932	96"	10577	120+	+110/in

(Up to 185", the sides are straight at ≈110 gal/in.)

4.26 244-S SUMP

PCSACS Level Reading = 2.45-in
PCSACS Level Reading Date = 2014-06-24

The 244-S sump consists of two 24-in diameter, 24-in long Schedule 40 pipe segments mounted vertically, 19-in center to center in the vault floor. Using Solidworks™ software, the sump volume per each inch increase is 3.7 gallons/inch.

The sump uses weight factor/specific gravity instrumentation to determine the waste level. The weight factor leg terminates 1-in above the sump bottom (Drawing H-2-71085). When the weight factor = 0-in, the sump contains 1-in or 3.7 gallons of waste, uncorrected for specific gravity.

The PCSACS weight factor data do not indicate that they have been corrected for the liquid specific gravity. Unless the liquid is water, the reported waste level will be higher than the actual waste level by the ratio of the density of the tank liquid to the density of water at the same temperature. Thus the "uncorrected" weight factor reports a higher than actual waste level whenever the liquid is more dense than water, and yields a conservative waste volume when used in the volume calculation.

2-in = 7.4 gallons
3-in = 11.1 gallons

$$PCSACS\ Level\ Reading = 2.45 - in$$
$$= 7.4\ gallons + 0.45\ x\ (11.1 - 7.4\ gallons) + 3.7\ gallons$$
$$Waste\ Volume = 12.8\ gallons$$
$$Waste\ Volume = 12.8\ gallons/(1000\ gallons/kilogallon)$$
$$Waste\ Volume = < 0.10\ kilogallons$$

244-S Sump Calibration Table

244-S Sump Calibration Table

J. R. Gunter 2014-05-22
Reference: H-2-71044, H-2-71046

Surface Area = 851.41 in^2

Volume/in = 851.41 in^3/in= 3.7 gal/in

Height (in)	Volume (gal)
1	3.7
2	7.4
3	11.1
4	14.8
5	18.5
6	22.2
7	25.9
8	29.6
9	33.3
10	37
11	40.7
12	44.4
13	48.1
14	51.8
15	55.5
16	59.2
17	62.9
18	66.6
19	70.3
20	74
21	77.7
22	81.4
23	85.1
24	88.8

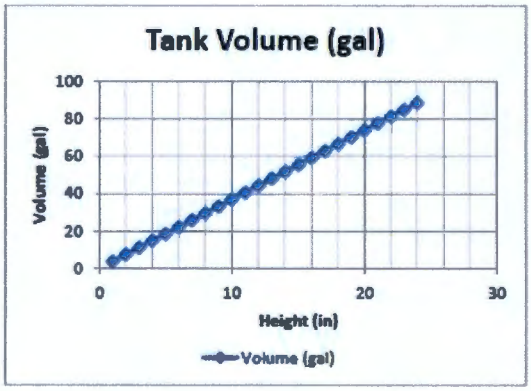

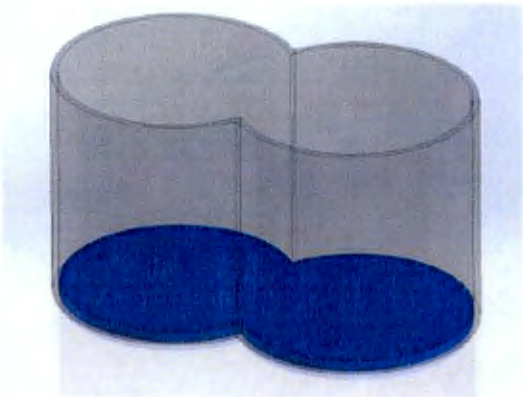

12

4.27 244-TX-TK

PCSACS Level Reading = 39.37-in
PCSACS Level Reading Date = 2014-05-07

39-in = 6788 gallons
40-in = 7032 gallons

Calibration Table: ECN-630520, *Incorporation of Catch Tank Specification Limits in SD-WM-TI-352, N1743*, page 15.

PCSACS Level Reading $= 39.37 - in = 6788\ gallons + 0.37\ x\ (7032 - 6788\ gallons)$
$Waste\ Volume = 6878\ gallons$
$Waste\ Volume = 6878\ gallons/(1000\ gallons/kilogallon)$
$Waste\ Volume = 6.9\ kilogallons$

244-TX-TK Calibration Table

ECN 630520, ~~97~~ 'S

TANK(S) 244-BX, 244-TX
Date of Calibration: Calculated

NOMINAL TANK CAPACITY: 31,000 Gal. DIMENSIONS: 12' O.D.
50%: 15,500 Gal. 80%: 24,800 Gal. 35' Btwn. Ends
REF. DWG. #: SK-2-23356 SHAPE/POSITION: Horiz/Rnd. Ends

LEVEL MEASUREMENT: ☐ Manual Tape ☐ FIC Transmitter Range:

in.	gal	in.	gal	in.	gal	in.	gal	in.	gal
1"	30	25"	3605	49"	9312	73"	15774	97"	22205
2"	86	26"	3814	50"	9573	74"	16047	98"	22462
3"	157	27"	4027	51"	9834	75"	16320	99"	22717
4"	242	28"	4243	52"	10097	76"	16593	100"	22970
5"	337	29"	4461	53"	10361	77"	16865	101"	23222
6"	442	30"	4683	54"	10626	78"	17137	102"	23472
7"	556	31"	4907	55"	10893	79"	17409	103"	23721
8"	678	32"	5134	56"	11160	80"	17681	104"	23968
9"	807	33"	5363	57"	11427	81"	17952	105"	24212
10"	944	34"	5595	58"	11696	82"	18223	106"	24455
11"	1086	35"	5829	59"	11966	83"	18494	107"	24696
12"	1235	36"	6065	60"	12236	84"	18764	108"	24935
13"	1389	37"	6304	61"	12506	85"	19034	109"	25171
14"	1549	38"	6545	62"	12777	86"	19304	110"	25405
15"	1714	39"	6788	63"	13048	87"	19573	111"	25637
16"	1884	40"	7032	64"	13319	88"	19840	112"	25866
17"	2059	41"	7279	65"	13591	89"	20107	113"	26093
18"	2238	42"	7528	66"	13863	90"	20374	114"	26317
19"	2422	43"	7778	67"	14135	91"	20639	115"	26539
20"	2610	44"	8030	68"	14407	92"	20903	116"	26757
21"	2801	45"	8283	69"	14680	93"	21166	117"	26973
22"	2997	46"	8538	70"	14953	94"	21427	118"	27186
23"	3196	47"	8795	71"	15226	95"	21688	119"	27395
24"	3399	48"	9053	72"	15500	96"	21947	120"	27601

4.28 244-TX-SUMP

PCSACS Level Reading = 0.25-in
PCSACS Level Reading Date = 2014-02-18

Drawing H-2-73784 shows structural plans for the 244-BX, 244-TX, and 244-U receiver vaults including the sump. The drawing refers to Drawing H-2-73787 Detail 14 for more details. Drawing H-2-73787 is titled *Structural RCVR Vault 244-TX Liner Plate Details* but was obviously intended to cover all three receiver vaults. The sump cross-section area is shown as 24-in x 79-in x 5-in deep (Drawings H-2-73784 and H-2-73787).

There is no calibration table for this sump. Each 1-in increase in waste level elevation between 0-in and 5-in corresponds to an 8.20 gallon increase.

$$Waste\ Volume/Vertical\ inch = (24 - in\ x\ 79 - in\ x\ 1 - in\ Deep)/(12\ inches/ft)^3\ x\ 7.48\ gallons/ft^3$$
$$Waste\ Volume/Vertical\ inch = 8.21\ gallons/inch$$

$$PCSACS\ Level\ Reading = 0.25 - in = 0.25 - in\ x\ 8.21\ \ gallons/inch$$
$$Waste\ Volume = 2.05\ gallons$$
$$Waste\ Volume = 2.05\ gallons/(1000\ gallons/kilogallon)$$
$$Waste\ Volume = < 0.10\ kilogallons$$

244-TX Double-Contained Receiver Tank and Sump Basis for Waste Volume Estimate

244-TX Double-Contained Receiver Tank and Sump Basis for Waste Volume Estimate:

Cells N/A
Sump 244-TX (Identical with 244-BX)
Tank TK-244-TX (Identical with 244-BX)

Prepared: May 22, 2014
D. J. Washenfelder

References:

1. H-2-73784 Sheet 1 Rev. 2, *Structural RCVR Vault 244-BX, TX & U Plans*
2. H-2-73787 Sheet 1 Rev. 1, *Structural RCVR Vault 244-TX Liner Plate Details*
3. SK-2-23356 Sheet 1 Rev. 4, *Receiver Vessels Salt Well Systems*
4. H-2-73933 Sheet 1 Rev. 3, *Receiver Vessel Interface Control Requirements*
5. RPP-RPT-29878 Rev. 0, 2006, *Catch Tank level Trend Assessment*, Table 18 – 244-BX Calibration Table (from ECN-630520)

The 244-BX, 244-TX, and 244-U double-contained receiver tanks use identical vessel and vault designs and dimensions, including process cell floor slope and sump size, and process vessel internals. Equivalent drawings for the three vessels and vaults are shown below.

244-BX, 244-TX, and 244-U Vessel and Process Vault Design Equivalency			
Feature	244-BX DCRT	244-TX DCRT	244-U DCRT
Process Vault Design	H-2-73784 H-2-73787	H-2-73784 H-2-73787	H-2-73784 H-2-73787
Process Vault Sump	H-2-73784 H-2-73787[1]	H-2-73784 H-2-73787[1]	H-2-73784 H-2-73787[1]
Tank	SK-2-23356 H-2-73933	SK-2-23356 H-2-73933	SK-2-23356 H-2-73933

Table Notes and References:

1. Drawing H-2-73784 shows structural plans for the 244-BX, 244-TX, and 244-U receiver vaults including the sump. The sump cross-section area is shown as 2'-0" x 6'-7". The drawing refers to Drawing H-2-73787 Detail 14 for more details. Drawing H-2-73787 is titled *Structural RCVR Vault 244-TX Liner Plate Details* but was obviously intended to cover all three receiver vaults.

Calibration tables for 244-BX DCRT and 244-TX DCRT are published in RPP-RPT-29878 Rev. 0, 2006, *Catch Tank Level Trend Assessment*, Table 18 and Table 20.

1

244-TX Tank and Receiver Vault Waste Volumes:

Feature Identification	Liquid Data Date	Liquid Height (in)	Liquid Volume (gal)	Solids Data Date	Solids Height (in)	Solids Volume (gal)	Total Volume (gal)	Reference
TK-244-TX	05/07/2014	39.37	6878				6878	PCSACS
TK-244-TX Sump	06/18/2011	0.25	2				2	PCSACS
Table Notes and References:								

Calculations:

Tank 244-TX Receiver Vault Sump:

Sump Volume ft^3 *per inch liquid* $= 6.58\ ft\ x\ 2.00\ ft\ x\ 0.083\ ft$
Sump Volume ft^3 *per inch liquid* $= 1.0967\ ft^3$ *per inch* for 0-in - 7-in
Sump Volume gallons per inch liquid $= 1.0967\ ft^3$ *per inch x 7.48 gallons per* ft^3
Sump Volume gallons per inch liquid $= 8.204$ *gallons per inch*

Sump Liquid Level $= 0.25$ *inch on February 18, 2014 (PCSACS)*
Sump Volume $= 0.25$ *inch x 8.204 gallons per inch*

Sump Volume $= 2.05$ *gallons*

Tank 244-TX Volume, from RPP-RPT-29878 Rev. 0, Table 18:

Tank Liquid Level $= 39.37$ *inch on May 7, 2014 (PCSACS)*
Tank Liquid Level $= (6{,}738\ gal - 0.37x(7032 - 6738)gal$

Tank Waste Volume $= 6{,}878$ *gallons*

2

4.29 244-TXR VAULT/ TK-TXR-001

Stabilization Evaluation Form: 1984-11-07
Solids Level Reading = 11.75-in
Solids Level Reading Date = 1984-10
Waste Level ("Liquid Level") Reading = 12.00-in
Waste Level ("Liquid Level") Reading Date = 1984-10

The 244-TXR and 244-CR process vaults use identical cell and vessel designs and dimensions, including process cell floor slope and sump size, and process vessel internals. Calibration tables for 244-CR Vault process vessel and process cell volumes are published in RPP-CALC-24219 Rev. 0, *244-CR Vault Tank and Cell Volume Calculations*, Tables 1 – 5. Since the vault and process vessel designs are identical, RPP-CALC-24219 is used for estimating 244-TXR waste volumes here. Refer to the Design Equivalency discussion following the 244-TXR Vault / SUMP-TXR-003 section.

Calibration Table: RPP-CALC-24219 Rev. 0, *244-CR Vault Tank and Cell Volume Calculations*, Table 1

$$Waste\ Volume = 12.00 - in = 462\ gallons$$
$$Waste\ Volume = 462\ gallons/(1000\ gallons/kilogallon)$$
$$Waste\ Volume = 0.46\ kilogallons$$

$$Solids\ Volume = 11.75 - in = 443\ gallons$$

$$Liquid\ Volume = Waste\ Volume - Solids\ Volume$$
$$Liquid\ Volume = 462\ gallons\ - 443\ gallons$$
$$Liquid\ Volume = 19\ gallons$$

244-TXR Vault / TK-TXR-001 Calibration Table

RPP-CALC-24219, Rev. 0 **Page** 18 **of** 25

Title: 244-CR Vault Tank and Cell Volume Calculations **Identifier:** P-06-18 **Rev:** 0

Originator: AB Carlson **Date:** 1/10/05

Checker: MM Durst **Date:** 1/10/05

Organizational Manager: MJ Sutey **Date:** 1/18/05

Table 1. Volume as a Function of Liquid Level for Tanks TK-CR-001 and TK-CR-011 (2 pages)

Ht. (in.)	Vol. (gal)	Ht. (in.)	Vol. (gal)	Ht. (in.)	Vol. (gal)	Ht. (in.)	Vol. (gal)	Ht. (in.)	Vol. (gal)	Ht. (in.)	Vol. (gal)	Ht. (in.)	Vol. (gal)	Ht. (in.)	Vol. (gal)
0	0	14.5	672	28.75	2590	43	5309	57.5	8148	72	10988	86.5	13828	101	16667
0.25	0.2	14.75	696	29	2634	43.25	5358	57.75	8197	72.25	11037	86.75	13877	101.25	16716
0.5	0.8	15	719	29.25	2678	43.5	5407	58	8246	72.5	11086	87	13926	101.5	16765
0.75	1.8	15.25	743	29.5	2723	43.75	5456	58.25	8295	72.75	11135	87.25	13975	101.75	16814
1	3.3	15.5	767	29.75	2768	44	5505	58.5	8344	73	11184	87.5	14024	102	16863
1.25	5.1	15.75	792	30	2813	44.25	5554	58.75	8393	73.25	11233	87.75	14073	102.25	16912
1.5	7.3	16	817	30.25	2858	44.5	5603	59	8442	73.5	11282	88	14122	102.5	16961
1.75	10	16.25	842	30.5	2904	44.75	5651	59.25	8491	73.75	11331	88.25	14170	102.75	17010
2	13	16.5	868	30.75	2949	45	5700	59.5	8540	74	11380	88.5	14219	103	17059
2.25	16	16.75	894	31	2995	45.25	5749	59.75	8589	74.25	11429	88.75	14268	103.25	17108
2.5	20	17	921	31.25	3041	45.5	5798	60	8638	74.5	11478	89	14317	103.5	17157
2.75	25	17.25	948	31.5	3088	45.75	5847	60.25	8687	74.75	11527	89.25	14366	103.75	17206
3	29	17.5	975	31.75	3134	46	5896	60.5	8736	75	11576	89.5	14415	104	17255
3.25	34	17.75	1003	32	3181	46.25	5945	60.75	8785	75.25	11625	89.75	14464	104.25	17304
3.5	40	18	1031	32.25	3227	46.5	5994	61	8834	75.5	11674	90	14513	104.5	17353
3.75	46	18.25	1060	32.5	3274	46.75	6043	61.25	8883	75.75	11722	90.25	14562	104.75	17402
4	52	18.5	1088	32.75	3321	47	6092	61.5	8932	76	11771	90.5	14611	105	17451
4.25	59	18.75	1118	33	3368	47.25	6141	61.75	8981	76.25	11820	90.75	14660	105.25	17500
4.5	66	19	1147	33.25	3415	47.5	6190	62	9030	76.5	11869	91	14709	105.5	17549
4.75	73	19.25	1177	33.5	3463	47.75	6239	62.25	9079	76.75	11918	91.25	14758	105.75	17598
5	81	19.5	1208	33.75	3510	48	6288	62.5	9128	77	11967	91.5	14807	106	17647
5.25	89	19.75	1238	34	3558	48.25	6337	62.75	9177	77.25	12016	91.75	14856	106.25	17696
5.5	98	20	1269	34.25	3606	48.5	6386	63	9226	77.5	12065	92	14905	106.5	17745
5.75	107	20.25	1301	34.5	3653	48.75	6435	63.25	9274	77.75	12114	92.25	14954	106.75	17794
6	117	20.5	1333	34.75	3701	49	6484	63.5	9323	78	12163	92.5	15003	107	17842
6.25	126	20.75	1365	35	3749	49.25	6533	63.75	9372	78.25	12212	92.75	15052	107.25	17891
6.5	137	21	1397	35.25	3797	49.5	6582	64	9421	78.5	12261	93	15101	107.5	17940
6.75	147	21.25	1430	35.5	3845	49.75	6631	64.25	9470	78.75	12310	93.25	15150	107.75	17989
7	158	21.5	1464	35.75	3894	50	6680	64.5	9519	79	12359	93.5	15199	108	18038
7.25	170	21.75	1497	36	3942	50.25	6729	64.75	9568	79.25	12408	93.75	15248	108.25	18087
7.5	182	22	1532	36.25	3990	50.5	6778	65	9617	79.5	12457	94	15297	108.5	18136
7.75	194	22.25	1566	36.5	4039	50.75	6826	65.25	9666	79.75	12506	94.25	15346	108.75	18185
8	207	22.5	1601	36.75	4087	51	6875	65.5	9715	80	12555	94.5	15394	109	18234
8.25	220	22.75	1636	37	4136	51.25	6924	65.75	9764	80.25	12604	94.75	15443	109.25	18283
8.5	233	23	1671	37.25	4184	51.5	6973	66	9813	80.5	12653	95	15492	109.5	18332
8.75	247	23.25	1707	37.5	4233	51.75	7022	66.25	9862	80.75	12702	95.25	15541	109.75	18381
9	261	23.5	1744	37.75	4282	52	7071	66.5	9911	81	12751	95.5	15590	110	18430
9.25	276	23.75	1780	38	4330	52.25	7120	66.75	9960	81.25	12800	95.75	15639	110.25	18479
9.5	291	24	1817	38.25	4379	52.5	7169	67	10009	81.5	12849	96	15688	110.5	18528
9.75	306	24.25	1855	38.5	4428	52.75	7218	67.25	10058	81.75	12898	96.25	15737	110.75	18577
10	322	24.5	1893	38.75	4477	53	7267	67.5	10107	82	12946	96.5	15786	111	18626
10.25	338	24.75	1931	39	4526	53.25	7316	67.75	10156	82.25	12995	96.75	15835	111.25	18675
10.5	355	25	1969	39.25	4574	53.5	7365	68	10205	82.5	13044	97	15884	111.5	18724
10.75	372	25.25	2008	39.5	4623	53.75	7414	68.25	10254	82.75	13093	97.25	15933	111.75	18773
11	389	25.5	2047	39.75	4672	54	7463	68.5	10303	83	13142	97.5	15982	112	18822
11.25	407	25.75	2087	40	4721	54.25	7512	68.75	10352	83.25	13191	97.75	16031	112.25	18871
11.5	425	26	2127	40.25	4770	54.5	7561	69	10401	83.5	13240	98	16080	112.5	18920
11.75	443	26.25	2167	40.5	4819	54.75	7610	69.25	10450	83.75	13289	98.25	16129	112.75	18969
12	462	26.5	2208	40.70*	4859	55	7659	69.5	10498	84	13338	98.5	16178	113	19018
12.25	481	26.75	2249	40.75	4868	55.25	7708	69.75	10547	84.25	13387	98.75	16227	113.25	19066
12.5	501	27	2290	41	4917	55.5	7757	70	10596	84.5	13436	99	16276	113.5	19115
12.75	521	27.25	2332	41.25	4966	55.75	7806	70.25	10645	84.75	13485	99.25	16325	113.75	19164
13	542	27.5	2374	41.5	5015	56	7855	70.5	10694	85	13534	99.5	16374	114	19213
13.25	562	27.75	2417	41.75	5064	56.25	7904	70.75	10743	85.25	13583	99.75	16423	114.25	19262
13.5	584	27.89*	2440	42	5113	56.5	7953	71	10792	85.5	13632	100	16472	114.5	19311
13.75	605	28	2459	42.25	5162	56.75	8002	71.25	10841	85.75	13681	100.25	16521	114.75	19360
14	627	28.25	2503	42.5	5211	57	8050	71.5	10890	86	13730	100.5	16570	115	19409
14.25	650	28.5	2546	42.75	5260	57.25	8099	71.75	10939	86.25	13779	100.75	16618	115.25	19458

Title: 244-CR Vault Tank and Cell Volume Calculations **Identifier:** P-06-18 Rev: 0
Originator: AB Carlson **Date:** 1/10/05
Checker: MM Durst **Date:** 1/10/05
Organizational Manager: MJ Sutey **Date:** 1/13/05

Table 1. Volume as a Function of Liquid Level for Tanks TK-CR-001 and TK-CR-011 (2 pages)

Ht. (in.)	Vol. (gal)	Ht. (in.)	Vol. (gal)	Ht. (in.)	Vol. (gal)	Ht. (in.)	Vol. (gal)	Ht. (in.)	Vol. (gal)	Ht. (in.)	Vol. (gal)	Ht. (in.)	Vol. (gal)	Ht. (in.)	Vol. (gal)
115.5	19507	128.75	22102	142	24697	155.25	27292	168.5	29887	181.75	32481	195	35076	208.25	37671
115.75	19556	129	22151	142.25	24746	155.5	27341	168.75	29936	182	32530	195.25	35125	208.5	37720
116	19605	129.25	22200	142.5	24795	155.75	27390	169	29985	182.25	32579	195.5	35174	208.75	37769
116.25	19654	129.5	22249	142.75	24844	156	27439	169.25	30033	182.5	32628	195.75	35223	209	37818
116.5	19703	129.75	22298	143	24893	156.25	27488	169.5	30082	182.75	32677	196	35272	209.25	37867
116.75	19752	130	22347	143.25	24942	156.5	27537	169.75	30131	183	32726	196.25	35321	209.5	37916
117	19801	130.25	22396	143.5	24991	156.75	27585	170	30180	183.25	32775	196.5	35370	209.75	37965
117.25	19850	130.5	22445	143.75	25040	157	27634	170.25	30229	183.5	32824	196.75	35419	210	38014
117.5	19899	130.75	22494	144	25089	157.25	27683	170.5	30278	183.75	32873	197	35468	210.25	38063
117.75	19948	131	22543	144.25	25137	157.5	27732	170.75	30327	184	32922	197.25	35517	210.5	38112
118	19997	131.25	22592	144.5	25186	157.75	27781	171	30376	184.25	32971	197.5	35566	210.75	38161
118.25	20046	131.5	22641	144.75	25235	158	27830	171.25	30425	184.5	33020	197.75	35615	211	38210
118.5	20095	131.75	22689	145	25284	158.25	27879	171.5	30474	184.75	33069	198	35664	211.25	38259
118.75	20144	132	22738	145.25	25333	158.5	27928	171.75	30523	185	33118	198.25	35713	211.5	38308
119	20193	132.25	22787	145.5	25382	158.75	27977	172	30572	185.25	33167	198.5	35762	211.75	38357
119.25	20242	132.5	22836	145.75	25431	159	28026	172.25	30621	185.5	33216	198.75	35811	212	38406
119.5	20290	132.75	22885	146	25480	159.25	28075	172.5	30670	185.75	33265	199	35860	212.25	38455
119.75	20339	133	22934	146.25	25529	159.5	28124	172.75	30719	186	33314	199.25	35909	212.5	38504
120	20388	133.25	22983	146.5	25578	159.75	28173	173	30768	186.25	33363	199.5	35958	212.75	38553
120.25	20437	133.5	23032	146.75	25627	160	28222	173.25	30817	186.5	33412	199.75	36007	213	38601
120.5	20486	133.75	23081	147	25676	160.25	28271	173.5	30866	186.75	33461	200	36056	213.25	38650
120.75	20535	134	23130	147.25	25725	160.5	28320	173.75	30915	187	33510	200.25	36105	213.5	38699
121	20584	134.25	23179	147.5	25774	160.75	28369	174	30964	187.25	33559	200.5	36153	213.75	38748
121.25	20633	134.5	23228	147.75	25823	161	28418	174.25	31013	187.5	33608	200.75	36202	214	38797
121.5	20682	134.75	23277	148	25872	161.25	28467	174.5	31062	187.75	33657	201	36251	214.25	38846
121.75	20731	135	23326	148.25	25921	161.5	28516	174.75	31111	188	33705	201.25	36300	214.5	38895
122	20780	135.25	23375	148.5	25970	161.75	28565	175	31160	188.25	33754	201.5	36349	214.75	38944
122.25	20829	135.5	23424	148.75	26019	162	28614	175.25	31209	188.5	33803	201.75	36398	215	38993
122.5	20878	135.75	23473	149	26068	162.25	28663	175.5	31257	188.75	33852	202	36447	215.25	39042
122.75	20927	136	23522	149.25	26117	162.5	28712	175.75	31306	189	33901	202.25	36496	215.5	39091
123	20976	136.25	23571	149.5	26166	162.75	28761	176	31355	189.25	33950	202.5	36545	215.75	39140
123.25	21025	136.5	23620	149.75	26215	163	28809	176.25	31404	189.5	33999	202.75	36594	216	39189
123.5	21074	136.75	23669	150	26264	163.25	28858	176.5	31453	189.75	34048	203	36643	216.25	39238
123.75	21123	137	23718	150.25	26313	163.5	28907	176.75	31502	190	34097	203.25	36692	216.5	39287
124	21172	137.25	23767	150.5	26361	163.75	28956	177	31551	190.25	34146	203.5	36741	216.75	39336
124.25	21221	137.5	23816	150.75	26410	164	29005	177.25	31600	190.5	34195	203.75	36790	217	39385
124.5	21270	137.75	23865	151	26459	164.25	29054	177.5	31649	190.75	34244	204	36839	217.25	39434
124.75	21319	138	23913	151.25	26508	164.5	29103	177.75	31698	191	34293	204.25	36888	217.5	39483
125	21368	138.25	23962	151.5	26557	164.75	29152	178	31747	191.25	34342	204.5	36937	217.75	39532
125.25	21417	138.5	24011	151.75	26606	165	29201	178.25	31796	191.5	34391	204.75	36986	218	39581
125.5	21466	138.75	24060	152	26655	165.25	29250	178.5	31845	191.75	34440	205	37035	218.25	39630
125.75	21514	139	24109	152.25	26704	165.5	29299	178.75	31894	192	34489	205.25	37084	218.5	39679
126	21563	139.25	24158	152.5	26753	165.75	29348	179	31943	192.25	34538	205.5	37133	218.75	39728
126.25	21612	139.5	24207	152.75	26802	166	29397	179.25	31992	192.5	34587	205.75	37182	219	39776
126.5	21661	139.75	24256	153	26851	166.25	29446	179.5	32041	192.75	34636	206	37231	219.25	39825
126.75	21710	140	24305	153.25	26900	166.5	29495	179.75	32090	193	34685	206.25	37280	219.5	39874
127	21759	140.25	24354	153.5	26949	166.75	29544	180	32139	193.25	34734	206.5	37329	219.75	39923
127.25	21808	140.5	24403	153.75	26998	167	29593	180.25	32188	193.5	34783	206.75	37377	220	39972
127.5	21857	140.75	24452	154	27047	167.25	29642	180.5	32237	193.75	34832	207	37426	220.25	40021
127.75	21906	141	24501	154.25	27096	167.5	29691	180.75	32286	194	34881	207.25	37475	220.5	40070
128	21955	141.25	24550	154.5	27145	167.75	29740	181	32335	194.25	34929	207.5	37524	220.70^	40110
128.25	22004	141.5	24599	154.75	27194	168	29789	181.25	32384	194.5	34978	207.75	37573		
128.5	22053	141.75	24648	155	27243	168.25	29838	181.5	32433	194.75	35027	208	37622		

Footnotes:

* Transition from flange dish to knuckle dish

\# Transition from knuckle dish to straight section of tank

^ Maximum fill height of tank

4.30 244-TXR VAULT / SUMP-TXR-001

Stabilization Evaluation Form: 1984-11-07
Solids Level Reading = 1.25-in
Solids Level Reading Date = 1984-10
Waste Level ("Liquid Level") Reading = 3.00-in
Waste Level ("Liquid Level") Reading Date = 1984-10

The 244-TXR and 244-CR process vaults use identical cell and vessel designs and dimensions, including process cell floor slope and sump size, and process vessel internals. Calibration tables for 244-CR Vault process vessel and process cell volumes are published in RPP-CALC-24219 Rev. 0, *244-CR Vault Tank and Cell Volume Calculations*, Tables 1 – 5. Since the vault and process vessel designs are identical, RPP-CALC-24219 is used for estimating 244-TXR waste volumes here. Refer to the Design Equivalency discussion following the 244-TXR Vault / SUMP-TXR-003 section.

Calibration Table: RPP-CALC-24219, Rev. 0, *244-CR Vault Tank and Cell Volume Calculations*, Table 3

$$Waste\ Volume = 3.00 - in = 11\ gallons$$
$$Waste\ Volume = 11\ gallons/(1000\ gallons/kilogallon)$$
$$Waste\ Volume = < 0.10\ kilogallons$$

$$Solids\ Volume = 1.25 - in = 4.7\ gallons$$

$$Liquid\ Volume = Waste\ Volume - Solids\ Volume$$
$$Liquid\ Volume = 11\ gallons - 4.7\ gallons$$
$$Liquid\ Volume = 6.3\ gallons$$

244-TXR Vault / SUMP-TXR-001 Calibration Table

RPP-CALC-24219, Rev. 0 **Page** 22 **of** 25

Title: 244-CR Vault Tank and Cell Volume Calculations **Identifier:** P-06-18 Rev: 0

Originator: AB Carlson **Date:** 1/10/05

Checker: MM Durst **Date:** 1/10/05

Organizational Manager: MJ Sutey **Date:** 1/13/05

Table 3. Volume as a Function of Liquid Level for Cell CR-001
(As Measured from the Bottom of the Sump)

Ht. (in.)	Vol. (gal)	Ht. (in.)	Vol. (gal)	Ht. (in.)	Vol. (gal)	Ht. (in.)	Vol. (gal)	Ht. (in.)	Vol. (gal)	Ht. (in.)	Vol. (gal)
0	0	11.25	42	22.25	3138	33.5	6693	44.75	9462	56	11529
0.25	0.9	11.5	43	22.5	3226	33.75	6763	45	9515	56.25	11570
0.5	1.9	11.75	44	22.75	3313	34	6833	45.25	9568	56.5	11611
0.75	2.8	12*	45	23	3400	34.25	6902	45.5	9620	56.75	11652
1	3.7	12.25	47	23.25	3487	34.5	6971	45.75	9672	57	11693
1.25	4.7	12.5	52	23.5	3573	34.75	7039	46	9723	57.25	11734
1.5	5.6	12.75	62	23.75	3659	35	7107	46.25	9774	57.5	11775
1.75	6.5	13	77	24	3744	35.25	7175	46.5	9825	57.75	11816
2	7.5	13.25	100	24.25	3829	35.5	7242	46.75	9875	58	11856
2.25	8.4	13.5	132	24.5	3914	35.75	7309	47	9925	58.25	11897
2.5	9.4	13.75	174	24.75	3998	36	7375	47.25	9975	58.5	11937
2.75	10	14	228	25	4081	36.25	7441	47.5	10024	58.75	11978
3	11	14.25	294	25.25	4165	36.5	7507	47.75	10073	59	12018
3.25	12	14.5#	376	25.5	4248	36.75	7572	48	10121	59.25	12059
3.5	13	14.75	465	25.75	4330	37	7637	48.25	10170	59.5	12099
3.75	14	15	554	26	4413	37.25	7702	48.5	10217	59.75	12139
4	15	15.25	643	26.25	4494	37.5	7766	48.75	10265	60	12179
4.25	16	15.5	732	26.5	4576	37.75	7830	49	10312	60.25	12220
4.5	17	15.75	822	26.75	4657	38	7893	49.25	10359	60.5	12260
4.75	18	16	911	27	4737	38.25	7956	49.5	10405	60.75	12300
5	19	16.25	1000	27.25	4817	38.5	8019	49.75	10451	61	12340
5.25	20	16.5	1089	27.5	4897	38.75	8081	50	10497	61.25	12380
5.5	21	16.75	1178	27.75	4977	39	8143	50.25	10542	61.5	12420
5.75	22	17	1267	28	5056	39.25	8204	50.5	10587	61.75	12460
6	22	17.25	1356	28.25	5134	39.5	8265	50.75	10632	62	12500
6.25	23	17.5	1446	28.5	5212	39.75	8326	51	10676	62.25	12541
6.5	24	17.75	1535	28.75	5290	40	8387	51.25	10721	62.5**	12581
6.75	25	18	1624	29	5367	40.25	8446	51.5	10765	62.75	12621
7	26	18.25	1713	29.25	5444	40.5	8506	51.75	10809	63	12661
7.25	27	18.5	1802	29.5	5521	40.75	8565	52	10852	63.25	12701
7.5	28	18.75	1891	29.75	5597	41	8624	52.25	10896	63.5	12741
7.75	29	19	1980	30	5673	41.25	8683	52.5	10939	63.75	12781
8	30	19.25	2070	30.25	5748	41.5	8741	52.75	10982	64	12821
8.25	31	19.5	2159	30.5	5823	41.75	8799	53	11025	64.25	12861
8.5	32	19.75	2248	30.75	5898	42	8856	53.25	11068	64.5	12901
8.75	33	20	2337	31	5972	42.25	8913	53.5	11110	64.75	12941
9	34	20.25	2426	31.25	6046	42.5	8970	53.75	11153	65	12981
9.25	35	20.5	2515	31.5	6120	42.75	9026	54	11195	65.25	13021
9.5	36	20.75	2604	31.75	6193	43	9082	54.25	11237	65.5	13061
9.75	36	21	2694	32	6265	43.25	9137	54.5	11279	65.75	13101
10	37	21.25	2783	32.25	6338	43.5	9192	54.75	11321	66	13141
10.25	38	21.5	2872	32.5	6409	43.75	9247	55	11363		
10.5	39	21.57^	2896	32.75	6481	44	9301	55.25	11404		
10.75	40	21.75	2961	33	6552	44.25	9355	55.5	11446		
11	41	22	3049	33.25	6623	44.5	9409	55.75	11487		

Footnotes:

* Top of Sump/Low Point of Floor

\# High Point of Floor

^ Bottom of tank TK-CR-001

** Transition between tank dished head and straight side of tank

4.31 244-TXR VAULT / TK-TXR-002

Stabilization Evaluation Form: 1984-11-07
Solids Level Reading = 31.00-in
Solids Level Reading Date = 1984-10
Waste Level ("Liquid Level") Reading = 31.00-in
Waste Level ("Liquid Level") Reading Date = 1984-10

The 244-TXR and 244-CR process vaults use identical cell and vessel designs and dimensions, including process cell floor slope and sump size, and process vessel internals. Calibration tables for 244-CR Vault process vessel and process cell volumes are published in RPP-CALC-24219 Rev. 0, *244-CR Vault Tank and Cell Volume Calculations*, Tables 1 – 5. Since the vault and process vessel designs are identical, RPP-CALC-24219 is used for estimating 244-TXR waste volumes here. Refer to the Design Equivalency discussion following the 244-TXR Vault / SUMP-TXR-003 section.

Calibration Table: RPP-CALC-24219, Rev. 0, *244-CR Vault Tank and Cell Volume Calculations*, Table 2

$$Waste\ Volume = 31.00 - in = 1868\ gallons$$
$$Waste\ Volume = 1868\ gallons/(1000\ gallons/kilogallon)$$
$$Waste\ Volume = 1.9\ kilogallons$$

$$Solids\ Volume = 31.00 - in = 1868\ gallons$$

$$Liquid\ Volume = Waste\ Volume - Solids\ Volume$$
$$Liquid\ Volume = 1868\ gallons - 1868\ gallons\ )$$
$$Liquid\ Volume = 0\ gallons$$

244-TXR Vault / TK-TXR-002 Calibration Table

RPP-CALC-24219, Rev. 0 **Page** 20 **of** 25

Title: 244-CR Vault Tank and Cell Volume Calculations **Identifier:** P-06-18 **Rev:** 0

Originator: AB Carlson **Date:** 1/10/05

Checker: MM Durst **Date:** 1/10/05

Organizational Manager: MJ Sutey **Date:** 1/13/05

Table 2. Volume as a Function of Liquid Level for Tanks TK-CR-002 and TK-CR-003 (2 pages)

Ht. (in.)	Vol. (gal)	Ht. (in.)	Vol. (gal)	Ht. (in.)	Vol. (gal)	Ht. (in.)	Vol. (gal)	Ht. (in.)	Vol. (gal)	Ht. (in.)	Vol. (gal)
0	0	10.5	247	20.5	915	30.75	1845	41.25	2819	51.75	3794
0.25	0.1	10.75	258	20.75	936	31	1868	41.5	2843	52	3817
0.5	0.6	11	270	21	957	31.25	1891	41.75	2866	52.25	3840
0.75	1.3	11.25	283	21.25	979	31.5	1914	42	2889	52.5	3863
1	2.3	11.5	295	21.5	1000	31.75	1938	42.25	2912	52.75	3887
1.25	3.6	11.75	308	21.75	1022	32	1961	42.5	2935	53	3910
1.5	5.1	12	321	22	1044	32.25	1984	42.75	2959	53.25	3933
1.75	7.0	12.25	335	22.25	1066	32.5	2007	43	2982	53.5	3956
2	9.1	12.5	348	22.5	1088	32.75	2030	43.25	3005	53.75	3979
2.25	12	12.75	362	22.75	1110	33	2054	43.5	3028	54	4003
2.5	14	13	376	23	1132	33.25	2077	43.75	3051	54.25	4026
2.75	17	13.25	391	23.25	1154	33.5	2100	44	3075	54.5	4049
3	20	13.5	405	23.5	1177	33.75	2123	44.25	3098	54.75	4072
3.25	24	13.75	420	23.75	1199	34	2146	44.5	3121	55	4096
3.5	28	14	435	24	1222	34.25	2170	44.75	3144	55.25	4119
3.75	32	14.25	451	24.25	1244	34.5	2193	45	3167	55.5	4142
4	36	14.5	467	24.5	1267	34.75	2216	45.25	3191	55.75	4165
4.25	41	14.75	483	24.75	1290	35	2239	45.5	3214	56	4188
4.5	46	15	499	25	1313	35.25	2262	45.75	3237	56.25	4212
4.75	51	15.25	515	25.25	1336	35.5	2286	46	3260	56.5	4235
5	57	15.5	532	25.5	1359	35.75	2309	46.25	3283	56.75	4258
5.25	62	15.75	549	25.75	1382	36	2332	46.5	3307	57	4281
5.5	68	16	566	26	1405	36.25	2355	46.75	3330	57.25	4304
5.75	75	16.25	584	26.25	1428	36.5	2378	47	3353	57.5	4328
6	81	16.5	602	26.5	1451	36.75	2402	47.25	3376	57.75	4351
6.25	88	16.75	620	26.75	1474	37	2425	47.5	3399	58	4374
6.5	95	17	638	27	1497	37.25	2448	47.75	3423	58.25	4397
6.75	103	17.25	657	27.25	1520	37.5	2471	48	3446	58.5	4420
7	110	17.5	675	27.5	1543	37.75	2495	48.25	3469	58.75	4444
7.25	118	17.75	695	27.75	1566	38	2518	48.5	3492	59	4467
7.5	127	18	714	28	1590	38.25	2541	48.75	3515	59.25	4490
7.75	135	18.25	733	28.25	1613	38.5	2564	49	3539	59.5	4513
8	144	18.5	753	**28.48^**	1634	38.75	2587	49.25	3562	59.75	4536
8.25	153	**18.53***	755	28.5	1636	39	2611	49.5	3585	60	4560
8.5	162	18.75	773	28.75	1659	39.25	2634	49.75	3608	60.25	4583
8.75	172	19	792	29	1682	39.5	2657	50	3631	60.5	4606
9	182	19.25	812	29.25	1706	39.75	2680	50.25	3655	60.75	4629
9.25	192	19.5	832	29.5	1729	40	2703	50.5	3678	61	4652
9.5	202	**19.53#**	834	29.75	1752	40.25	2727	50.75	3701	61.25	4676
9.75	213	19.75	852	30	1775	40.5	2750	51	3724	61.5	4699
10	224	20	873	30.25	1798	40.75	2773	51.25	3747	61.75	4722
10.25	235	20.25	894	30.5	1822	41	2796	51.5	3771	62	4745

Title: 244-CR Vault Tank and Cell Volume Calculations **Identifier:** P-06-18 Rev: 0
Originator: AB Carlson **Date:** 1/10/05
Checker: MM Durst **Date:** 1/10/05
Organizational Manager: MJ Sutey **Date:** 1/12/05

Table 2. Volume as a Function of Liquid Level for Tanks TK-CR-002 and TK-CR-003 (2 pages)

Ht. (in.)	Vol. (gal)	Ht. (in.)	Vol. (gal)	Ht. (in.)	Vol. (gal)	Ht. (in.)	Vol. (gal)	Ht. (in.)	Vol. (gal)	Ht. (in.)	Vol. (gal)
62.25	4768	71.5	5633	81	6545	90.5	7457	100	8368	109.5	9280
62.5	4792	71.75	5657	81.25	6569	90.75	7481	100.25	8392	109.75	9304
62.75	4815	72	5681	81.5	6593	91	7505	100.5	8416	110	9328
63	4838	72.25	5705	81.75	6617	91.25	7528	100.75	8440	110.25	9352
63.25	4861	72.5	5729	82	6641	91.5	7552	101	8464	110.5	9376
63.5	4884	72.75	5753	82.25	6665	91.75	7576	101.25	8488	110.75	9400
63.75	4908	73	5777	82.5	6689	92	7600	101.5	8512	111	9424
64	4931	73.25	5801	82.75	6713	92.25	7624	101.75	8536	111.25	9448
64.25	4954	73.5	5825	83	6737	92.5	7648	102	8560	111.5	9472
64.5	4977	73.75	5849	83.25	6761	92.75	7672	102.25	8584	111.75	9496
64.75	5000	74	5873	83.5	6785	93	7696	102.5	8608	112	9520
65	5024	74.25	5897	83.75	6809	93.25	7720	102.75	8632	112.25	9544
65.25	5047	74.5	5921	84	6833	93.5	7744	103	8656	112.5	9568
65.5	5070	74.75	5945	84.25	6857	93.75	7768	103.25	8680	112.75	9592
65.75	5093	75	5969	84.5	6881	94	7792	103.5	8704	113	9616
66	5116	75.25	5993	84.75	6905	94.25	7816	103.75	8728	113.25	9640
66.25	5140	75.5	6017	85	6929	94.5	7840	104	8752	113.5	9664
66.5	5163	75.75	6041	85.25	6953	94.75	7864	104.25	8776	113.75	9688
66.75	5186	76	6065	85.5	6977	95	7888	104.5	8800	114	9712
67	5209	76.25	6089	85.75	7001	95.25	7912	104.75	8824	114.25	9736
67.25	5232	76.5	6113	86	7025	95.5	7936	105	8848	114.5	9760
67.5	5256	76.75	6137	86.25	7049	95.75	7960	105.25	8872	114.75	9784
67.75	5279	77	6161	86.5	7073	96	7984	105.5	8896	115	9808
68	5302	77.25	6185	86.75	7097	96.25	8008	105.75	8920	115.25	9832
68.25	5325	77.5	6209	87	7121	96.5	8032	106	8944	115.5	9856
68.5	5348	77.75	6233	87.25	7145	96.75	8056	106.25	8968	115.75	9880
68.75	5372	78	6257	87.5	7169	97	8080	106.5	8992	116	9904
69	5395	78.25	6281	87.75	7193	97.25	8104	106.75	9016	116.25	9928
69.25	5418	78.5	6305	88	7217	97.5	8128	107	9040	116.5	9952
69.48**	5439	78.75	6329	88.25	7241	97.75	8152	107.25	9064	116.75	9976
69.5	5441	79	6353	88.5	7265	98	8176	107.5	9088	117	10000
69.75	5465	79.25	6377	88.75	7289	98.25	8200	107.75	9112	117.25	10023
70	5489	79.5	6401	89	7313	98.5	8224	108	9136	117.5	10047
70.25	5513	79.75	6425	89.25	7337	98.75	8248	108.25	9160	117.75	10071
70.5	5537	80	6449	89.5	7361	99	8272	108.5	9184	118	10095
70.75	5561	80.25	6473	89.75	7385	99.25	8296	108.75	9208	118.25	10119
71	5585	80.5	6497	90	7409	99.5	8320	109	9232	**118.48@**	10141
71.25	5609	80.75	6521	90.25	7433	99.75	8344	109.25	9256		

Footnotes:
- ♦ Bottom of coil
- # Transition from flange dish to knuckle dish
- ^ Transition from knuckle dish to straight section of tank
- ** Top of coil
- @ Maximum fill height of tank

4.32 244-TXR VAULT / SUMP-TXR-002

Stabilization Evaluation Form: 1984-11-07
Solids Level Reading = 0-in
Solids Level Reading Date = 1984-10
Waste Level ("Liquid Level") Reading = 5.00-in
Waste Level ("Liquid Level") Reading Date = 1984-10

The 244-TXR and 244-CR process vaults use identical cell and vessel designs and dimensions, including process cell floor slope and sump size, and process vessel internals. Calibration tables for 244-CR Vault process vessel and process cell volumes are published in RPP-CALC-24219 Rev. 0, *244-CR Vault Tank and Cell Volume Calculations*, Tables 1 – 5. Since the vault and process vessel designs are identical, RPP-CALC-24219 is used for estimating 244-TXR waste volumes here. Refer to the Design Equivalency discussion following the 244-TXR Vault / SUMP-TXR-003 section.

Calibration Table: RPP-CALC-24219, Rev. 0, *244-CR Vault Tank and Cell Volume Calculations*, Table 4

$$Waste\ Volume = 5.00 - in = 19\ gallons$$
$$Waste\ Volume = 19\ gallons/(1000\ gallons/kilogallon)$$
$$Waste\ Volume = < 0.10\ kilogallons$$

$$Solids\ Volume = 0 - in = 0\ gallons$$

$$Liquid\ Volume = Waste\ Volume - Solids\ Volume$$
$$Liquid\ Volume = 19\ gallons - 0\ gallons$$
$$Liquid\ Volume = 19\ gallons$$

244-TXR Vault / SUMP-TXR-002 Calibration Table

RPP-CALC-24219, Rev. 0 Page 23 of 25

Title: 244-CR Vault Tank and Cell Volume Calculations **Identifier:** P-06-18 Rev: 0

Originator: AB Carlson **Date:** 1/10/05

Checker: MM Durst **Date:** 1/10/05

Organizational Manager: MJ Sutey **Date:** 1/12/05

Table 4. Volume as a Function of Liquid Level for Cells CR-002 and CR-003
(As Measured from the Bottom of the Sump)

Ht. (in.)	Vol. (gal)	Ht. (in.)	Vol. (gal)	Ht. (in.)	Vol. (gal)	Ht. (in.)	Vol. (gal)	Ht. (in.)	Vol. (gal)	Ht. (in.)	Vol. (gal)
0	0	11.25	42	22.5	1925	33.5	3879	44.75	5343	56	6518
0.25	0.9	11.5	43	22.75	1975	33.75	3917	45	5370	56.25	6544
0.5	1.9	11.75	44	23	2025	34	3955	45.25	5397	56.5	6570
0.75	2.8	12*	45	23.14^	2052	34.25	3992	45.5	5424	56.75	6596
1	3.7	12.25	47	23.25	2074	34.5	4030	45.75	5451	57	6622
1.25	4.7	12.5	52	23.5	2124	34.75	4067	46	5478	57.25	6647
1.5	5.6	12.75	62	23.75	2173	35	4104	46.25	5505	57.5	6673
1.75	6.5	13	78	24	2222	35.25	4141	46.5	5531	57.75	6699
2	7.5	13.25	102	24.25	2271	35.5	4177	46.75	5558	58	6725
2.25	8.4	13.5	135	24.5	2320	35.75	4213	47	5584	58.25	6751
2.5	9.4	13.75#	179	24.75	2368	36	4249	47.25	5611	58.5	6777
2.75	10	14	229	25	2416	36.25	4285	47.5	5637	58.75	6802
3	11	14.25	279	25.25	2463	36.5	4320	47.75	5664	59	6828
3.25	12	14.5	329	25.5	2511	36.75	4355	48	5690	59.25	6854
3.5	13	14.75	379	25.75	2558	37	4390	48.25	5716	59.5	6880
3.75	14	15	429	26	2604	37.25	4424	48.5	5742	59.75	6906
4	15	15.25	479	26.25	2651	37.5	4459	48.75	5768	60	6932
4.25	16	15.5	529	26.5	2697	37.75	4493	49	5794	60.25	6957
4.5	17	15.75	578	26.75	2743	38	4526	49.25	5820	60.5	6983
4.75	18	16	628	27	2789	38.25	4560	49.5	5846	60.75	7009
5	19	16.25	678	27.25	2834	38.5	4593	49.75	5872	61	7035
5.25	20	16.5	728	27.5	2879	38.75	4626	50	5898	61.25	7061
5.5	21	16.75	778	27.75	2924	39	4659	50.25	5924	61.5	7087
5.75	22	17	828	28	2968	39.25	4691	50.5	5950	61.75	7112
6	22	17.25	878	28.25	3013	39.5	4723	50.75	5976	62	7138
6.25	23	17.5	927	28.5	3057	39.75	4755	51	6002	62.25	7164
6.5	24	17.75	977	28.75	3100	40	4787	51.25	6028	62.5	7190
6.75	25	18	1027	29	3144	40.25	4818	51.5	6053	62.75	7216
7	26	18.25	1077	29.25	3187	40.5	4850	51.75**	6079	63	7241
7.25	27	18.5	1127	29.5	3230	40.75	4881	52	6105	63.25	7267
7.5	28	18.75	1177	29.75	3272	41	4911	52.25	6131	63.5	7293
7.75	29	19	1227	30	3315	41.25	4942	52.5	6157	63.75	7319
8	30	19.25	1277	30.25	3357	41.5	4972	52.75	6183	64	7345
8.25	31	19.5	1326	30.5	3399	41.75	5002	53	6208	64.25	7371
8.5	32	19.75	1376	30.75	3440	42	5031	53.25	6234	64.5	7396
8.75	33	20	1426	31	3481	42.25	5061	53.5	6260	64.75	7422
9	34	20.25	1476	31.25	3522	42.5	5090	53.75	6286	65	7448
9.25	35	20.5	1526	31.5	3563	42.75	5119	54	6312	65.25	7474
9.5	36	20.75	1576	31.75	3603	43	5147	54.25	6338	65.5	7500
9.75	36	21	1626	32	3643	43.25	5176	54.5	6363	65.75	7526
10	37	21.25	1676	32.25	3683	43.5	5204	54.75	6389	66	7551
10.25	38	21.5	1725	32.5	3723	43.75	5232	55	6415		
10.5	39	21.75	1775	32.75	3762	44	5260	55.25	6441		
10.75	40	22	1825	33	3801	44.25	5288	55.5	6467		
11	41	22.25	1875	33.25	3840	44.5	5315	55.75	6492		

Footnotes:

* Top of Sump/Low Point of Floor

\# High Point of Floor

^ Bottom of tank TK-CR-002 or TK-CR-003

** Transition between tank dished head and straight side of tank

4.33 244-TXR VAULT / TK-TXR-003

Stabilization Evaluation Form: 1984-11-07
Solids Level Reading = 68.00-in
Solids Level Reading Date = 1984-10
Waste Level ("Liquid Level") Reading = 68.00-in
Waste Level ("Liquid Level") Reading Date = 1984-10

The 244-TXR and 244-CR process vaults use identical cell and vessel designs and dimensions, including process cell floor slope and sump size, and process vessel internals. Calibration tables for 244-CR Vault process vessel and process cell volumes are published in RPP-CALC-24219 Rev. 0, *244-CR Vault Tank and Cell Volume Calculations*, Tables 1 – 5. Since the vault and process vessel designs are identical, RPP-CALC-24219 is used for estimating 244-TXR waste volumes here. Refer to the Design Equivalency discussion following the 244-TXR Vault / SUMP-TXR-003 section.

Calibration Table: RPP-CALC-24219, Rev. 0, *244-CR Vault Tank and Cell Volume Calculations*, Table 2

$$Waste\ Volume = 68.00 - in = 5302\ gallons$$
$$Waste\ Volume = 5302\ gallons/(1000\ gallons/kilogallon)$$
$$Waste\ Volume = 5.3\ kilogallons$$

$$Solids\ Volume = 68 - in = 5302\ gallons$$

$$Liquid\ Volume = Waste\ Volume - Solids\ Volume$$
$$Liquid\ Volume = 5302\ gallons\ - 5302\ gallons$$
$$Liquid\ Volume = 0\ gallons$$

244-TXR Vault / TK-TXR-003 Calibration Table

RPP-CALC-24219, Rev. 0 Page 20 of 25

Title: 244-CR Vault Tank and Cell Volume Calculations **Identifier:** P-06-18 **Rev:** 0

Originator: AB Carlson **Date:** 1/10/05

Checker: MM Durst **Date:** 1/10/05

Organizational Manager: MJ Sutey **Date:** 1/13/05

Table 2. Volume as a Function of Liquid Level for Tanks TK-CR-002 and TK-CR-003 (2 pages)

Ht. (in.)	Vol. (gal)	Ht. (in.)	Vol. (gal)	Ht. (in.)	Vol. (gal)	Ht. (in.)	Vol. (gal)	Ht. (in.)	Vol. (gal)	Ht. (in.)	Vol. (gal)
0	0	10.5	247	20.5	915	30.75	1845	41.25	2819	51.75	3794
0.25	0.1	10.75	258	20.75	936	31	1868	41.5	2843	52	3817
0.5	0.6	11	270	21	957	31.25	1891	41.75	2866	52.25	3840
0.75	1.3	11.25	283	21.25	979	31.5	1914	42	2889	52.5	3863
1	2.3	11.5	295	21.5	1000	31.75	1938	42.25	2912	52.75	3887
1.25	3.6	11.75	308	21.75	1022	32	1961	42.5	2935	53	3910
1.5	5.1	12	321	22	1044	32.25	1984	42.75	2959	53.25	3933
1.75	7.0	12.25	335	22.25	1066	32.5	2007	43	2982	53.5	3956
2	9.1	12.5	348	22.5	1088	32.75	2030	43.25	3005	53.75	3979
2.25	12	12.75	362	22.75	1110	33	2054	43.5	3028	54	4003
2.5	14	13	376	23	1132	33.25	2077	43.75	3051	54.25	4026
2.75	17	13.25	391	23.25	1154	33.5	2100	44	3075	54.5	4049
3	20	13.5	405	23.5	1177	33.75	2123	44.25	3098	54.75	4072
3.25	24	13.75	420	23.75	1199	34	2146	44.5	3121	55	4096
3.5	28	14	435	24	1222	34.25	2170	44.75	3144	55.25	4119
3.75	32	14.25	451	24.25	1244	34.5	2193	45	3167	55.5	4142
4	36	14.5	467	24.5	1267	34.75	2216	45.25	3191	55.75	4165
4.25	41	14.75	483	24.75	1290	35	2239	45.5	3214	56	4188
4.5	46	15	499	25	1313	35.25	2262	45.75	3237	56.25	4212
4.75	51	15.25	515	25.25	1336	35.5	2286	46	3260	56.5	4235
5	57	15.5	532	25.5	1359	35.75	2309	46.25	3283	56.75	4258
5.25	62	15.75	549	25.75	1382	36	2332	46.5	3307	57	4281
5.5	68	16	566	26	1405	36.25	2355	46.75	3330	57.25	4304
5.75	75	16.25	584	26.25	1428	36.5	2378	47	3353	57.5	4328
6	81	16.5	602	26.5	1451	36.75	2402	47.25	3376	57.75	4351
6.25	88	16.75	620	26.75	1474	37	2425	47.5	3399	58	4374
6.5	95	17	638	27	1497	37.25	2448	47.75	3423	58.25	4397
6.75	103	17.25	657	27.25	1520	37.5	2471	48	3446	58.5	4420
7	110	17.5	675	27.5	1543	37.75	2495	48.25	3469	58.75	4444
7.25	118	17.75	695	27.75	1566	38	2518	48.5	3492	59	4467
7.5	127	18	714	28	1590	38.25	2541	48.75	3515	59.25	4490
7.75	135	18.25	733	28.25	1613	38.5	2564	49	3539	59.5	4513
8	144	18.5	753	**28.48^**	1634	38.75	2587	49.25	3562	59.75	4536
8.25	153	**18.53***	755	28.5	1636	39	2611	49.5	3585	60	4560
8.5	162	18.75	773	28.75	1659	39.25	2634	49.75	3608	60.25	4583
8.75	172	19	792	29	1682	39.5	2657	50	3631	60.5	4606
9	182	19.25	812	29.25	1706	39.75	2680	50.25	3655	60.75	4629
9.25	192	19.5	832	29.5	1729	40	2703	50.5	3678	61	4652
9.5	202	**19.53#**	834	29.75	1752	40.25	2727	50.75	3701	61.25	4676
9.75	213	19.75	852	30	1775	40.5	2750	51	3724	61.5	4699
10	224	20	873	30.25	1798	40.75	2773	51.25	3747	61.75	4722
10.25	235	20.25	894	30.5	1822	41	2796	51.5	3771	62	4745

Title: 244-CR Vault Tank and Cell Volume Calculations **Identifier:** P-06-18 Rev: 0
Originator: AB Carlson **Date:** 1/10/05
Checker: MM Durst **Date:** 1/10/05
Organizational Manager: MJ Sutey **Date:** 1/12/05

Table 2. Volume as a Function of Liquid Level for Tanks TK-CR-002 and TK-CR-003 (2 pages)

Ht. (in.)	Vol. (gal)	Ht. (in.)	Vol. (gal)	Ht. (in.)	Vol. (gal)	Ht. (in.)	Vol. (gal)	Ht. (in.)	Vol. (gal)	Ht. (in.)	Vol. (gal)
62.25	4768	71.5	5633	81	6545	90.5	7457	100	8368	109.5	9280
62.5	4792	71.75	5657	81.25	6569	90.75	7481	100.25	8392	109.75	9304
62.75	4815	72	5681	81.5	6593	91	7505	100.5	8416	110	9328
63	4838	72.25	5705	81.75	6617	91.25	7528	100.75	8440	110.25	9352
63.25	4861	72.5	5729	82	6641	91.5	7552	101	8464	110.5	9376
63.5	4884	72.75	5753	82.25	6665	91.75	7576	101.25	8488	110.75	9400
63.75	4908	73	5777	82.5	6689	92	7600	101.5	8512	111	9424
64	4931	73.25	5801	82.75	6713	92.25	7624	101.75	8536	111.25	9448
64.25	4954	73.5	5825	83	6737	92.5	7648	102	8560	111.5	9472
64.5	4977	73.75	5849	83.25	6761	92.75	7672	102.25	8584	111.75	9496
64.75	5000	74	5873	83.5	6785	93	7696	102.5	8608	112	9520
65	5024	74.25	5897	83.75	6809	93.25	7720	102.75	8632	112.25	9544
65.25	5047	74.5	5921	84	6833	93.5	7744	103	8656	112.5	9568
65.5	5070	74.75	5945	84.25	6857	93.75	7768	103.25	8680	112.75	9592
65.75	5093	75	5969	84.5	6881	94	7792	103.5	8704	113	9616
66	5116	75.25	5993	84.75	6905	94.25	7816	103.75	8728	113.25	9640
66.25	5140	75.5	6017	85	6929	94.5	7840	104	8752	113.5	9664
66.5	5163	75.75	6041	85.25	6953	94.75	7864	104.25	8776	113.75	9688
66.75	5186	76	6065	85.5	6977	95	7888	104.5	8800	114	9712
67	5209	76.25	6089	85.75	7001	95.25	7912	104.75	8824	114.25	9736
67.25	5232	76.5	6113	86	7025	95.5	7936	105	8848	114.5	9760
67.5	5256	76.75	6137	86.25	7049	95.75	7960	105.25	8872	114.75	9784
67.75	5279	77	6161	86.5	7073	96	7984	105.5	8896	115	9808
68	5302	77.25	6185	86.75	7097	96.25	8008	105.75	8920	115.25	9832
68.25	5325	77.5	6209	87	7121	96.5	8032	106	8944	115.5	9856
68.5	5348	77.75	6233	87.25	7145	96.75	8056	106.25	8968	115.75	9880
68.75	5372	78	6257	87.5	7169	97	8080	106.5	8992	116	9904
69	5395	78.25	6281	87.75	7193	97.25	8104	106.75	9016	116.25	9928
69.25	5418	78.5	6305	88	7217	97.5	8128	107	9040	116.5	9952
69.48**	5439	78.75	6329	88.25	7241	97.75	8152	107.25	9064	116.75	9976
69.5	5441	79	6353	88.5	7265	98	8176	107.5	9088	117	10000
69.75	5465	79.25	6377	88.75	7289	98.25	8200	107.75	9112	117.25	10023
70	5489	79.5	6401	89	7313	98.5	8224	108	9136	117.5	10047
70.25	5513	79.75	6425	89.25	7337	98.75	8248	108.25	9160	117.75	10071
70.5	5537	80	6449	89.5	7361	99	8272	108.5	9184	118	10095
70.75	5561	80.25	6473	89.75	7385	99.25	8296	108.75	9208	118.25	10119
71	5585	80.5	6497	90	7409	99.5	8320	109	9232	**118.48@**	10141
71.25	5609	80.75	6521	90.25	7433	99.75	8344	109.25	9256		

Footnotes:
- * Bottom of coil
- " Transition from flange dish to knuckle dish
- ^ Transition from knuckle dish to straight section of tank
- ** Top of coil
- @ Maximum fill height of tank

4.34 244-TXR VAULT / SUMP-TXR-003

Stabilization Evaluation Form: 1984-11-07
Solids Level Reading = 6.50-in
Solids Level Reading Date = 1984-10
Waste Level ("Liquid Level") Reading = 7.50-in
Waste Level ("Liquid Level") Reading Date = 1984-10

The 244-TXR and 244-CR process vaults use identical cell and vessel designs and dimensions, including process cell floor slope and sump size, and process vessel internals. Calibration tables for 244-CR Vault process vessel and process cell volumes are published in RPP-CALC-24219 Rev. 0, *244-CR Vault Tank and Cell Volume Calculations*, Tables 1 – 5. Since the vault and process vessel designs are identical, RPP-CALC-24219 is used for estimating 244-TXR waste volumes here. Refer to the Design Equivalency discussion following this section.

Calibration Table: RPP-CALC-24219, Rev. 0, *244-CR Vault Tank and Cell Volume Calculations*, Table 4.

$$Waste\ Volume = 7.50 - in = 28\ gallons$$
$$Waste\ Volume = 28\ gallons/(1000\ gallons/kilogallon)$$
$$Waste\ Volume =< 0.10\ kilogallons$$

$$Solids\ Volume = 6.50 - in = 24\ gallons$$

$$Liquid\ Volume = Waste\ Volume - Solids\ Volume$$
$$Liquid\ Volume = 28\ gallons\ - 24\ gallons$$
$$Liquid\ Volume = 4\ gallons$$

244-TXR Vault / SUMP-TXR-003 Calibration Table

RPP-CALC-24219, Rev. 0 **Page** 23 **of** 25

Title: 244-CR Vault Tank and Cell Volume Calculations **Identifier:** P-06-18 Rev: 0

Originator: AB Carlson **Date:** 1/10/05

Checker: MM Durst **Date:** 1/10/05

Organizational Manager: MJ Sutey **Date:** 1/13/05

Table 4. Volume as a Function of Liquid Level for Cells CR-002 and CR-003 (As Measured from the Bottom of the Sump)

Ht. (in.)	Vol. (gal)	Ht. (in.)	Vol. (gal)	Ht. (in.)	Vol. (gal)	Ht. (in.)	Vol. (gal)	Ht. (in.)	Vol. (gal)	Ht. (in.)	Vol. (gal)
0	0	11.25	42	22.5	1925	33.5	3879	44.75	5343	56	6518
0.25	0.9	11.5	43	22.75	1975	33.75	3917	45	5370	56.25	6544
0.5	1.9	11.75	44	23	2025	34	3955	45.25	5397	56.5	6570
0.75	2.8	12*	45	23.14^	2052	34.25	3992	45.5	5424	56.75	6596
1	3.7	12.25	47	23.25	2074	34.5	4030	45.75	5451	57	6622
1.25	4.7	12.5	52	23.5	2124	34.75	4067	46	5478	57.25	6647
1.5	5.6	12.75	62	23.75	2173	35	4104	46.25	5505	57.5	6673
1.75	6.5	13	78	24	2222	35.25	4141	46.5	5531	57.75	6699
2	7.5	13.25	102	24.25	2271	35.5	4177	46.75	5558	58	6725
2.25	8.4	13.5	135	24.5	2320	35.75	4213	47	5584	58.25	6751
2.5	9.4	13.75#	179	24.75	2368	36	4249	47.25	5611	58.5	6777
2.75	10	14	229	25	2416	36.25	4285	47.5	5637	58.75	6802
3	11	14.25	279	25.25	2463	36.5	4320	47.75	5664	59	6828
3.25	12	14.5	329	25.5	2511	36.75	4355	48	5690	59.25	6854
3.5	13	14.75	379	25.75	2558	37	4390	48.25	5716	59.5	6880
3.75	14	15	429	26	2604	37.25	4424	48.5	5742	59.75	6906
4	15	15.25	479	26.25	2651	37.5	4459	48.75	5768	60	6932
4.25	16	15.5	529	26.5	2697	37.75	4493	49	5794	60.25	6957
4.5	17	15.75	578	26.75	2743	38	4526	49.25	5820	60.5	6983
4.75	18	16	628	27	2789	38.25	4560	49.5	5846	60.75	7009
5	19	16.25	678	27.25	2834	38.5	4593	49.75	5872	61	7035
5.25	20	16.5	728	27.5	2879	38.75	4626	50	5898	61.25	7061
5.5	21	16.75	778	27.75	2924	39	4659	50.25	5924	61.5	7087
5.75	22	17	828	28	2968	39.25	4691	50.5	5950	61.75	7112
6	22	17.25	878	28.25	3013	39.5	4723	50.75	5976	62	7138
6.25	23	17.5	927	28.5	3057	39.75	4755	51	6002	62.25	7164
6.5	24	17.75	977	28.75	3100	40	4787	51.25	6028	62.5	7190
6.75	25	18	1027	29	3144	40.25	4818	51.5	6053	62.75	7216
7	26	18.25	1077	29.25	3187	40.5	4850	51.75**	6079	63	7241
7.25	27	18.5	1127	29.5	3230	40.75	4881	52	6105	63.25	7267
7.5	28	18.75	1177	29.75	3272	41	4911	52.25	6131	63.5	7293
7.75	29	19	1227	30	3315	41.25	4942	52.5	6157	63.75	7319
8	30	19.25	1277	30.25	3357	41.5	4972	52.75	6183	64	7345
8.25	31	19.5	1326	30.5	3399	41.75	5002	53	6208	64.25	7371
8.5	32	19.75	1376	30.75	3440	42	5031	53.25	6234	64.5	7396
8.75	33	20	1426	31	3481	42.25	5061	53.5	6260	64.75	7422
9	34	20.25	1476	31.25	3522	42.5	5090	53.75	6286	65	7448
9.25	35	20.5	1526	31.5	3563	42.75	5119	54	6312	65.25	7474
9.5	36	20.75	1576	31.75	3603	43	5147	54.25	6338	65.5	7500
9.75	36	21	1626	32	3643	43.25	5176	54.5	6363	65.75	7526
10	37	21.25	1676	32.25	3683	43.5	5204	54.75	6389	66	7551
10.25	38	21.5	1725	32.5	3723	43.75	5232	55	6415		
10.5	39	21.75	1775	32.75	3762	44	5260	55.25	6441		
10.75	40	22	1825	33	3801	44.25	5288	55.5	6467		
11	41	22.25	1875	33.25	3840	44.5	5315	55.75	6492		

Footnotes:

* Top of Sump/Low Point of Floor

\# High Point of Floor

^ Bottom of tank TK-CR-002 or TK-CR-003

** Transition between tank dished head and straight side of tank

244-TXR Vault Basis for Waste Volume Estimate

244-TXR Process Vault Basis for Waste Volume Estimate:

Cells TXR-001, TXR-002, and TXR-003
Sumps TXR-001, TXR-002, and TR-003
Tanks TK-TXR-001, TK-TXR-002, and TK-UR-003

Prepared: May 26, 2014
D. J. Washenfelder

References:

1. H-2-41107 Sheet 1, Rev. 3, *Vessel Assembly & Details – Redesign Existing 10' 0" x 14' 0" Tanks TK CR-004, TK BXR-004, TK TXR-004*
2. H-2-41688 Sheet 1 Rev. 3, *Vessel Assembly Details 20'-0" x 19'-2" Tank TK-CR-001. TK BXR-001, TK TXR-001*
3. H-2-42236 Sheet 1 Rev. 2 *Structure – Concrete – Sections and Details – Process Tank Vault Sheet I*
4. H-2-42237 Sheet 2 Rev. 2, *Structural – Sections & Details – Process Tank Vault Sheet II*
5. H-2-42707 Sheet 1 Rev. 2, *Structural Concrete Plans & Details – Process Tank Vault*
6. H-2-41089 Sheet 1 Rev. 2, *Vessel Assemby & Details 14'-0" x 12' Tank - TK-CR-002, TK-CR-003, TK-BXR-002, TK-BXR-003, TK-TXR-002, TK-TXR-003*
7. H-2-41090 Sheet 1 Rev. 1, *Vessel Details 14'-0" x 12'-0" Tank TK-CR-002, TK-CR-003, TK-BXR-002, TK-BXR-003, TK-TXR-002, TK-TXR-003*
8. H-2-41688 Sheet 1 Rev. 3, *Vessel Assembly Details 20'-0" x 19'-2" Tank TK-CR-001, TK-BXR-001, TK-TXR-001*
9. H-2-41888 Sheet 1 Rev. 3, *Structural - Concrete Plans & Details - Process Tank Vault*
10. H-2-41889 Sheet 1 Rev. 2, *Structural - Concrete - Sections and Details - Process Tank Vault Sheet #1*
11. RPP-CALC-24219 Rev. 0, *244-CR Vault Tank and Cell Volume Calculations*

The 244-TXR and 244-CR process vault cells 001, 002, and 003 have identical cell and vessel designs and dimensions, including process cell floor slope and sump size, and process vessel internals. Equivalent drawings for the two process vaults are shown below.

244-TXR and 244-CR Process Vault Design Equivalency		
Feature	244-TXR Process Vault	244-CR Process Vault
Process Cell Design (Cells 001, 002, 003)	H-2-42707 H-2-42236	H-2-41888 H-2-41889
TK-001	H-2-41688	H-2-41688
TK-002, TK-003	H-2-41089 H-2-41090	H-2-41089 H-2-41090
TK-004	H-2-41107	H-2-41107

Calibration tables for 244-CR Vault process vessel and process cell volumes are published in RPP-CALC-24219 Rev. 0, *244-CR Vault Tank and Cell Volume* Calculations, Tables 1 - 5. Since the 001, 002, and 003 process cell designs, and the TK-001, TK-002, and TK-003 process vessel designs are identical for 244-TXR and 244-CR Vaults, RPP-CALC-24219 is used for estimating the 244-TXR waste volumes.

Tank TK-TXR-004 never contained radioactive wate. The tank was located outside of the 244-TXR vault and held HNO_3 used for waste treatment. It is a 10-ft outside diameter straight side tank. Drawing H-2-41107 notes that the tank was repurposed, and the tank details are available on BPF #72819, which could not be recovered from records archives. Using the 10-ft diameter and neglecting wall thickness yields the following calibration:

TK-TXR-004 Gallons per Inch Liquid Height:

$$Gallons\ per\ Inch\ Liquid\ Height = \pi\ x\ (\frac{10-ft\ x\ 12\frac{in}{ft}}{2})^2\ x\ 1-in\ x\ 0.004329\ \ gallons/in^3$$

$Gallons\ per\ Inch\ Liquid\ Height = 48.96\ \ gallons/in$ for 0 – 168-in (0 – 14-ft) tank liquid levels

2

244-TXR Process Vault Waste Volumes:

Feature Identification	Liquid Data Date	Liquid Height (in)	Liquid Volume (gal)	Solids Data Date	Solids Height (in)	Solids Volume (gal)	Total Volume (gal)	Reference
TK-TXR-001	10/1984	12.00	19	10/1984	11.75	443	462	1
TK-TXR-001 Sump	10/1984	3.00	6.3	10/1984	1.25	4.7	11	1
TK-TXR-002	10/1984	31.00	0	10/1984	31.00	1868	1868	1
TK-TXR-002 Sump	10/1984	5.00	19	10/1984	0	0	19	1
TK-TXR-003	10/1984	68.00	0	10/1984	68.00	5302	5302	1
TK-TXR-003 Sump	10/1984	7.50	4	10/1984	6.50	24	28	1

Table Notes and References:
(1) Stabilization Evaluation Forms (attached)
(2) RPP-CALC-24219 Rev. 0, *244-CR Vault Tank and Cell Volume Calculations*

Calculations:

TK-TXR-001, from RPP-CALC-24219 Rev. 0, Table 1:

$$Liquid\ Volume = 462\ gallons\ (12.00 - in) - 443\ gallons\ (11.75 - in)$$
$$Liquid\ Volume = 19\ gallons$$

$$Solids\ Volume = 443\ gallons\ (11.75 - in)$$

TK-TXR-001 Sump, from RPP-CALC-24219 Rev. 0, Table 3:

$$Liquid\ Volume = 11\ gallons\ (3.00 - in) - 4.7\ gallons\ (1.25 - in)$$
$$Liquid\ Volume = 6.3\ gallons$$

$$Solids\ Volume = 4.7\ gallons\ (12.75 - in)$$

TK-TXR-002, from RPP-CALC-24219 Rev. 0, Table 2:

$$Liquid\ Volume = 1868\ gallons\ (31.00 - in) - 1868\ gallons\ (31.00 - in)$$
$$Liquid\ Volume = 0\ gallons$$

$$Solids\ Volume = 1868\ gallons\ (31.00 - in)$$

TK-TXR-002 Sump, from RPP-CALC-24219 Rev. 0, Table 4:

$$Liquid\ Volume = 19\ gallons\ (5 - in) - 0\ gallons\ (0 - in)$$
$$Liquid\ Volume = 19\ gallons$$

$$Solids\ Volume = 0\ gallons\ (0 - in)$$

3

TK-TXR-003, from RPP-CALC-24219 Rev. 0, Table 2:

$$Liquid\ Volume = 5302\ gallons\ (68.00 - in) - 5302\ gallons\ (68.00 - in)$$
$$Liquid\ Volume = 0\ gallons$$

$$Solids\ Volume = 5302\ gallons\ (68.00 - in)$$

TK-TXR-003 Sump, from RPP-CALC-24219 Rev. 0, Table 4:

$$Liquid\ Volume = 28\ gallons\ (7.50 - in) - 24\ gallons\ (6.50 - in)$$
$$Liquid\ Volume = 4\ gallons$$

$$Solids\ Volume = 24\ gallons\ (6.50 - in)$$

4

244-TXR Vault Stabilization Evaluation Forms

STABILIZATION EVALUATION FORM

Tank: TXR-001 TANK

Evaluation (see continuation page for calculations and additional comments):

(X) Tank history review completed

(X) Tank composition data reviewed

Tank Description: TANK USED FOR URANIUM RECOVERY. FOR GEOMETRY OF TANK SEE ATTACHED SHEET.

Solids Level: 11.75 Date: 10-84 Method: DOUGHNUT.

Liquid Level: 12.00 Date: 10-84 Method: FIELD TAPE

Estimated Supernatant Volume (gal): 100 GALLONS

Interim Stabilization Criteria: LESS THAN 400 GALLONS
(400 gallons or the volume of four inches of supernatant, whichever is greater)

( ) Cost/Benefit Analysis attached

Evaluation performed by: D W Fukumoto Date: 11/5/84

Checked by: [illegible] Date: 11/6/84

Disposition of Tank:

(X) Tank Interim Stabilized at 100 gallons of supernatant liquid

( ) Tank not Interim Stabilized; stabilization activities resumed

Approved by: [illegible] 11-5-84
Manager, TF&EPC Date

[illegible] 11-6-84
Manager, TFS&O Date

[illegible] 11-7-84
Program Manager Date

DISTRIBUTION: TF&EPC Tank File, Tank Farm Surveillance Analysis, Approval Signatures

EVALUATION CALCULATIONS AND COMMENTS

Tank: TXR-001

Tank Geometry:

TOP OF RISER TO BOTTOM OF TANK 43'6"
TOP OF RISER TO BOTTOM OF SUMP 45'-2½"

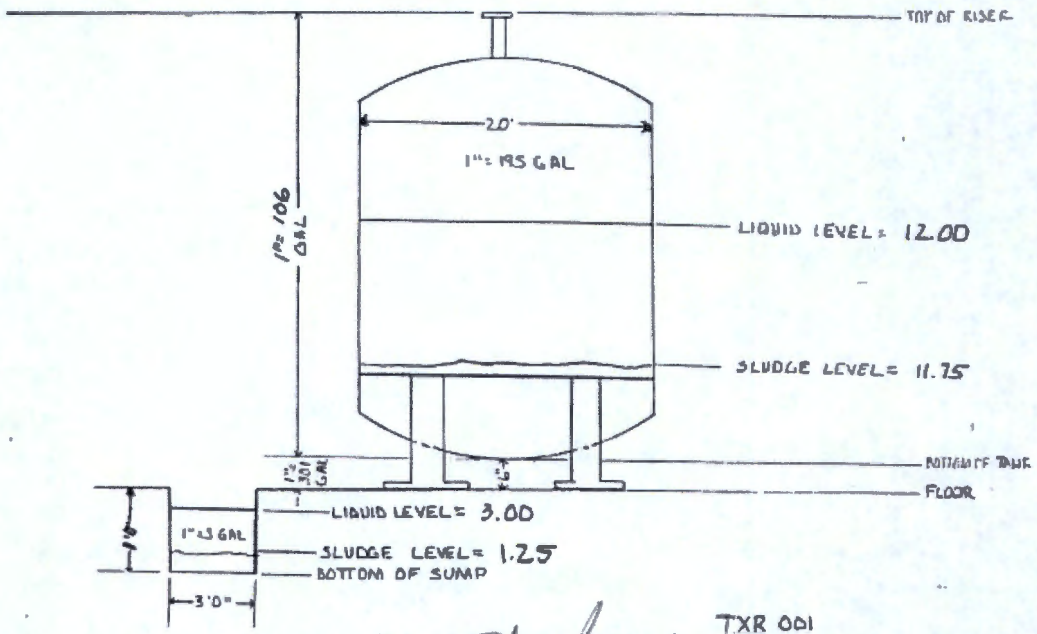

TXR 001

Calculations made by: D. W. Fukumoto 10/19/84

Checked by: E. Wass 11/5/84

REF DWG # H-2-42301

STABILIZATION EVALUATION FORM

Tank: TXR-DD1 SUMP

Evaluation (see continuation page for calculations and additional comments):

(X) Tank history review completed

(X) Tank composition data reviewed

Tank Description: CELL SUMP

Solids Level: 1.25 Date: 10-84 Method: DOUGHNUT.

Liquid Level: 3.00 Date: 10-84 Method: FIELD TAPE

Estimated Supernatant Volume (gal): 5 GALLONS

Interim Stabilization Criteria: LESS THAN 400 GALLONS
(400 gallons or the volume of four inches of supernatant, whichever is greater)

( ) Cost/Benefit Analysis attached

Evaluation performed by: D. M. Fukumoto Date: 11/5/84

Checked by: [illegible] Date: [illegible]

Disposition of Tank:

(x) Tank Interim Stabilized at 5 gallons of supernatant liquid

( ) Tank not Interim Stabilized; stabilization activities resumed

Approved by: [illegible] 11-5-84
Manager, TF&EPC Date

[illegible] 11-6-84
Manager, TFS&O Date

R A Kinsli 11-7-84
Program Manager Date

DISTRIBUTION: TF&EPC Tank File, Tank Farm Surveillance Analysis, Approval Signatures

STABILIZATION EVALUATION FORM

Tank: TXR-002 TANK

Evaluation (see continuation page for calculations and additional comments):

(X) Tank history review completed

(X) Tank composition data reviewed

Tank Description: TANK USED FOR URANIUM RECOVERY FOR GEOMETRY OF TANK SEE ATTACHED SHEET

Solids Level: 31.00 Date: 10-84 Method: DOUGHNUT

Liquid Level: 31.00 Date: 10-84 Method: FIELD TAPE

Estimated Supernatant Volume (gal): 0 GALLONS

Interim Stabilization Criteria: LESS THAN 400 GALLONS
(400 gallons or the volume of four inches of supernatant, whichever is greater)

( ) Cost/Benefit Analysis attached

Evaluation performed by: D.W. Fukumoto Date: 11/5/84

Checked by: [illegible] Date: 11/5/84

Disposition of Tank:

(X) Tank Interim Stabilized at 0 gallons of supernatant liquid

( ) Tank not Interim Stabilized; stabilization activities resumed

Approved by: [illegible] 11-5-84
Manager, TF&EPC Date

[illegible] 11-6-84
Manager, TF&AO Date

[illegible] 11-7-84
Program Manager Date

DISTRIBUTION: TF&EPC Tank File, Tank Farm Surveillance Analysis, Approval Signatures

EVALUATION CALCULATIONS AND COMMENTS

Tank: TXR 002

Tank Geometry:

TOP OF RISER TO BOTTOM OF TANK 33'6"
TOP OF RISER TO BOTTOM OF SUMP 35'-1 3/4"

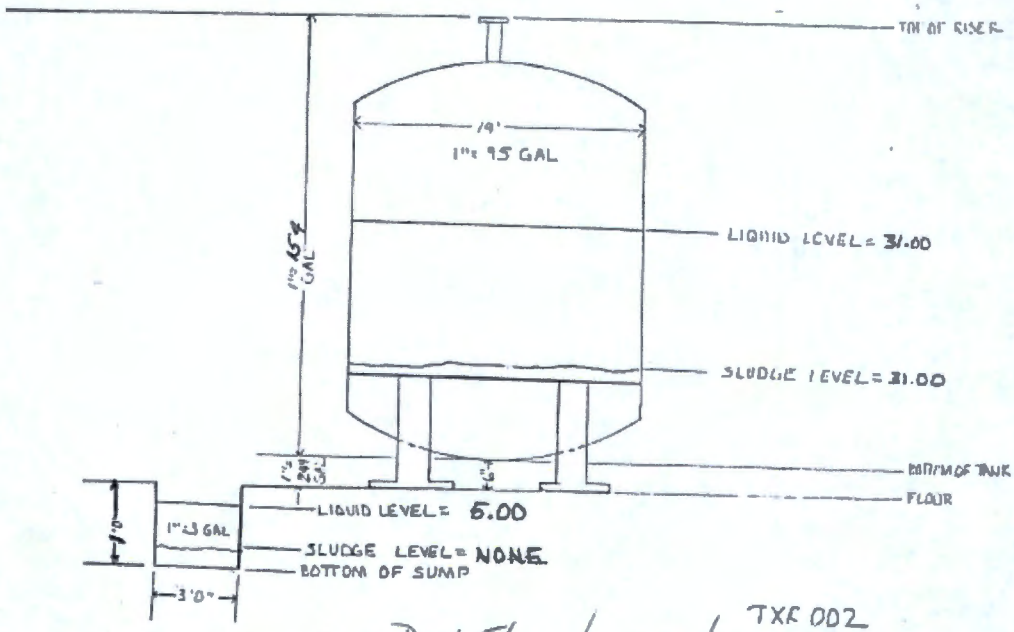

TXR 002

Calculations made by: D W Fukumoto 10/14/84

Checked by: [illegible] 11/5/84

REF DWG # H-2-42303

STABILIZATION EVALUATION FORM

Tank: TXR-002 SUMP

Evaluation (see continuation page for calculations and additional comments):

(X) Tank history review completed

(X) Tank composition data reviewed

Tank Description: CELL SUMP

Solids Level: NONE Date: 10-84 Method: DOUGHNUT

Liquid Level: 5.00 Date: 10-84 Method: FIELD TAPE

Estimated Supernatant Volume (gal): 15 GALLONS

Interim Stabilization Criteria: LESS THAN 400 GALLONS
(400 gallons or the volume of four inches of supernatant, whichever is greater)

( ) Cost/Benefit Analysis attached

Evaluation performed by: DW Fukumoto Date: 11/5/84

Checked by: [illegible] Date: 11/5/84

Disposition of Tank:

(X) Tank Interim Stabilized at 15 gallons of supernatant liquid

( ) Tank not Interim Stabilized; stabilization activities resumed

Approved by: [illegible] 11-5-84
Manager, TF&EPC Date

[illegible] 11-6-84
Manager, TFS&O Date

[illegible] 11-7-84
Program Manager Date

DISTRIBUTION: TF&EPC Tank File, Tank Farm Surveillance Analysis, Approval Signatures

STABILIZATION EVALUATION FORM

Tank: TXR-003 TANK

Evaluation (see continuation page for calculations and additional comments):

(X) Tank history review completed

(X) Tank composition data reviewed

Tank Description: TANK USED FOR URANIUM RECOVERY FOR GEOMETRY OF TANK SEE ATTACHED SHEET

Solids Level: 68.00 Date: 10-84 Method: DOUGHNUT

Liquid Level: 68.00 Date: 10-84 Method: FIELD TAPE

Estimated Supernatant Volume (gal): 0 GALLONS

Interim Stabilization Criteria: LESS THAN 400 GALLONS
(400 gallons or the volume of four inches of supernatant, whichever is greater)

( ) Cost/Benefit Analysis attached

Evaluation performed by: D.W Fukumoto Date: 11/5/84

Checked by: [illegible] Date: 11/5/84

Disposition of Tank:

(X) Tank Interim Stabilized at 0 gallons of supernatant liquid

( ) Tank not Interim Stabilized; stabilization activities resumed

Approved by: [illegible] 11-5-84
Manager, TF&EPC Date

[illegible] 11-6-84
Manager, TFS&O Date

[illegible] 11-7-84
Program Manager Date

DISTRIBUTION: TF&EPC Tank File, Tank Farm Surveillance Analysis, Approval Signatures

EVALUATION CALCULATIONS AND COMMENTS

Tank: TXR-003

Tank Geometry:

TOP OF RISER TO BOTTOM OF TANK 35'6"
TOP OF RISER TO BOTTOM OF SUMP 35' 1 3/4"

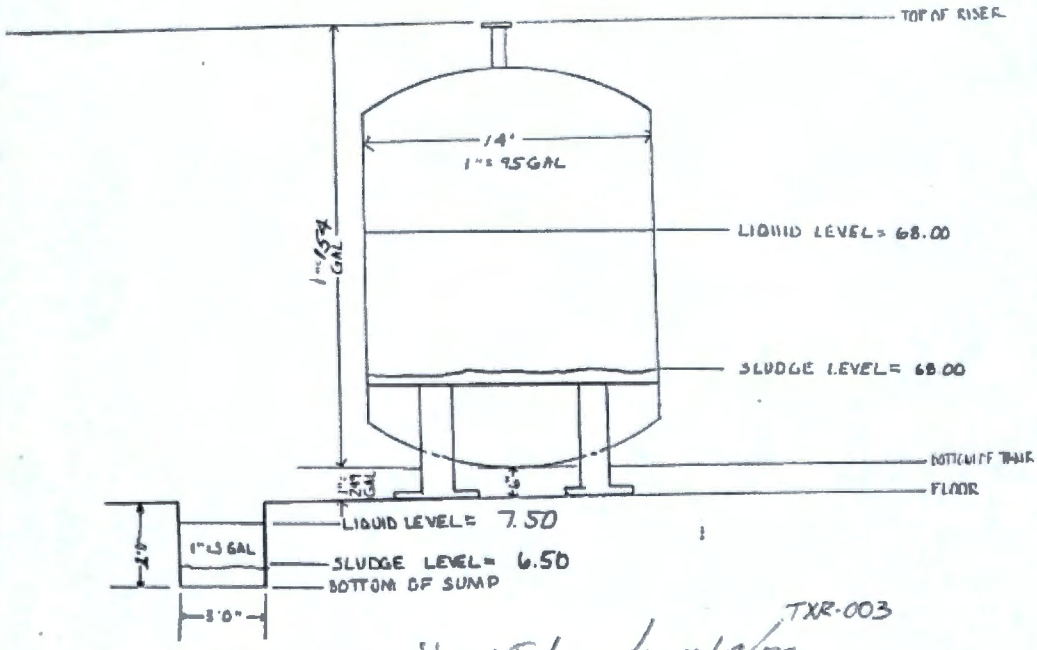

TXR-003

Calculations made by: V. W. Fukumoto 10/18/89

Checked by: [illegible]

REF DWG # H-2-42301

STABILIZATION EVALUATION FORM

Tank: TXR-003 SUMP

Evaluation (see continuation page for calculations and additional comments):

(X) Tank history review completed

(X) Tank composition data reviewed

Tank Description: CELL SUMP

Solids Level: 6.50 Date: 10-84 Method: DOUGHNUT

Liquid Level: 7.50 Date: 10-84 Method: FIELD TAPE

Estimated Supernatant Volume (gal): 3 GALLONS

Interim Stabilization Criteria: LESS THAN 400 GALLONS
(400 gallons or the volume of four inches of supernatant, whichever is greater)

( ) Cost/Benefit Analysis attached

Evaluation performed by: D. W. Fukumoto Date: 11/5/84

Checked by: [illegible] Date: 11/6/84

Disposition of Tank:

(X) Tank Interim Stabilized at 3 gallons of supernatant liquid

( ) Tank not Interim Stabilized; stabilization activities resumed

Approved by: [illegible] 11-5-84
Manager, TF&EPC Date

[illegible] 11-6-84
Manager, TFS&O Date

[illegible] 11-7-84
Program Manager Date

DISTRIBUTION: TF&EPC Tank File, Tank Farm Surveillance Analysis, Approval Signatures

4.35 244-U-TK

Tank 244-U was originally intended as the saltwell receiver for 241-U tank farm tanks. However the tank was bypassed and never received saltwell waste (Letter CH2M-05020302, E. S. Aromi, CH2M HILL Hanford Group, Inc. to R. J. Schepens, DOE-ORP, *Contract Number DE-AC27-99RL14047 – Completion of Hanford Federal Facility Agreement and Consent Order Milestone M-48-07, "Submit to Ecology A Disposition Plan For All Double-Shell Tank Components Not In Use Post 2005" Action*, dated August 3, 2005; RPP-39167 *Report of Closure for By-Passing the 244-U Double Contained Receiver Tank (DCRT) during Saltwell Pumping (NOC ID 360)*.

PCSACS Level Reading = 16-in
PCSACS Level Reading Date = 2010-11-03

Calibration Table: ECN-630520, *Incorporation of Catch Tank Specification Limits in SD-WM-TI-352, N1743*, page 15.

$$PCSACS\ Level\ Reading = 16 - in = 1884\ gallons$$
$$Waste\ Volume = 16 - in = 1884\ gallons$$
$$Waste\ Volume = 1884\ gallons/(1000\ gallons/kilogallon)$$
$$Waste\ Volume = 1.9\ kilogallons$$

244-U-TK Calibration Table

ECN 630520, pg # 5

TANK(S) 244-BX, 244-TX
Date of Calibration: Calculated

NOMINAL TANK CAPACITY: 31,000 Gal. DIMENSIONS: 12' O.D.
50%: 15,500 Gal. 80%: 24,800 Gal. 35' Btwn. Ends
REF. DWG. #: SK-2-23356 SHAPE/POSITION: Horiz/Rnd. Ends

LEVEL MEASUREMENT: ☐ Manual Tape ☐ FIC Transmitter Range:

in.	gal	in.	gal	in.	gal	in.	gal	in.	gal
1"	30	25"	3605	49"	9312	73"	15774	97"	22205
2"	86	26"	3814	50"	9573	74"	16047	98"	22462
3"	157	27"	4027	51"	9834	75"	16320	99"	22717
4"	242	28"	4243	52"	10097	76"	16593	100"	22970
5"	337	29"	4461	53"	10361	77"	16865	101"	23222
6"	442	30"	4683	54"	10626	78"	17137	102"	23472
7"	556	31"	4907	55"	10893	79"	17409	103"	23721
8"	678	32"	5134	56"	11160	80"	17681	104"	23968
9"	807	33"	5363	57"	11427	81"	17952	105"	24212
10"	944	34"	5595	58"	11696	82"	18223	106"	24455
11"	1086	35"	5829	59"	11966	83"	18494	107"	24696
12"	1235	36"	6065	60"	12236	84"	18764	108"	24935
13"	1389	37"	6304	61"	12506	85"	19034	109"	25171
14"	1549	38"	6545	62"	12777	86"	19304	110"	25405
15"	1714	39"	6788	63"	13048	87"	19573	111"	25637
16"	1884	40"	7032	64"	13319	88"	19840	112"	25866
17"	2059	41"	7279	65"	13591	89"	20107	113"	26093
18"	2238	42"	7528	66"	13863	90"	20374	114"	26317
19"	2422	43"	7778	67"	14135	91"	20639	115"	26539
20"	2610	44"	8030	68"	14407	92"	20903	116"	26757
21"	2801	45"	8283	69"	14680	93"	21166	117"	26973
22"	2997	46"	8538	70"	14953	94"	21427	118"	27186
23"	3196	47"	8795	71"	15226	95"	21688	119"	27395
24"	3399	48"	9053	72"	15500	96"	21947	120"	27601

4.36 244-U-SUMP

PCSACS Level Reading = No data
PCSACS Level Reading Date =

Drawing H-2-73784 shows structural plans for the 244-BX, 244-TX, and 244-U receiver vaults including the sump. The drawing refers to Drawing H-2-73787 Detail 14 for more details. Drawing H-2-73787 is titled *Structural RCVR Vault 244-TX Liner Plate Details* but was obviously intended to cover all three receiver vaults. The sump cross-section area is shown as 24-in x 79-in x 5-in deep (Drawings H-2-73784 and H-2-73787).

There is no calibration table for this sump. Each 1-in increase in waste level elevation between 0-in and 5-in corresponds to an 8.20 gallon increase.

$$Waste\ Volume/Vertical\ inch = (24 - in\ x\ 79 - in\ x\ 1 - in\ Deep)/(12\ inches/ft)^3\ x\ 7.48\ gallons/ft^3$$

$$Waste\ Volume/Vertical\ inch = 8.21\ gallons/inch$$

244-U Double-Contained Receiver Tank and Sump Basis for Waste Volume Estimate

244-U Double-Contained Receiver Tank and Sump Basis for Waste Volume Estimate:

Cells N/A
Sump 244-U (Identical with 244-BX)
Tank TK-244-U (Identical with 244-BX)

Prepared: May 22, 2014
D. J. Washenfelder

References:

1. H-2-73784 Sheet 1 Rev. 2, *Structural RCVR Vault 244-BX, TX & U Plans*
2. H-2-73787 Sheet 1 Rev. 1, *Structural RCVR Vault 244-TX Liner Plate Details*
3. SK-2-23356 Sheet 1 Rev. 4, *Receiver Vessels Salt Well Systems*
4. H-2-73933 Sheet 1 Rev. 3, *Receiver Vessel Interface Control Requirements*
5. RPP-RPT-29878 Rev. 0, 2006, *Catch Tank level Trend Assessment*, Table 18 – 244-BX Calibration Table (from ECN-630520)

The 244-BX, 244-TX, and 244-U double-contained receiver tanks use identical vessel and vault designs and dimensions, including process cell floor slope and sump size, and process vessel internals. Equivalent drawings for the three vessels and vaults are shown below.

244-BX, 244-TX, and 244-U Vessel and Process Vault Design Equivalency			
Feature	244-BX DCRT	244-TX DCRT	244-U DCRT
Process Vault Design	H-2-73784 H-2-73787	H-2-73784 H-2-73787	H-2-73784 H-2-73787
Process Vault Sump	H-2-73784 H-2-73787[1]	H-2-73784 H-2-73787[1]	H-2-73784 H-2-73787[1]
Tank	SK-2-23356 H-2-73933	SK-2-23356 H-2-73933	SK-2-23356 H-2-73933

Table Notes and References:

1. Drawing H-2-73784 shows structural plans for the 244-BX, 244-TX, and 244-U receiver vaults including the sump. The sump cross-section area is shown as 2'-0" x 6'-7". The drawing refers to Drawing H-2-73787 Detail 14 for more details. Drawing H-2-73787 is titled *Structural RCVR Vault 244-TX Liner Plate Details* but was obviously intended to cover all three receiver vaults.

Calibration tables for 244-BX DCRT and 244-TX DCRT are published in RPP-RPT-29878 Rev. 0, 2006, *Catch Tank Level Trend Assessment*, Table 18 and Table 20. Tank 244-U design is identical to tanks 244-BX and 244-TX as shown on drawing H-2-73933.

1

244-U Tank and Receiver Vault Waste Volumes:

Feature Identification	Liquid Data Date	Liquid Height (in)	Liquid Volume (gal)	Solids Data Date	Solids Height (in)	Solids Volume (gal)	Total Volume (gal)	Reference
TK-244-U	11/03/2010	16	1884				1884	
TK-244-U Sump	No data							
Table Notes and References:								

Calculations:

Tank 244-U Receiver Vault Sump:

Sump Volume ft^3 *per inch liquid* = 6.58 ft x 2.00 ft x 0.083 ft
Sump Volume ft^3 *per inch liquid* = 1.0967 ft^3 *per inch* for 0-in - 7-in
Sump Volume gallons per inch liquid = 1.0967 ft^3 *per inch x* 7.48 *gallons per* ft^3
Sump Volume gallons per inch liquid = 8.204 *gallons per inch*

Sump Liquid Level = 0 *inch (no PCSACS data)*
Sump Volume = 0 *inch x* 8.204 *gallons per inch*

Sump Volume = no data

Tank 244-U Volume, from RPP-RPT-29878 Rev. 0, Table 18:

Tank Liquid Level = 16 *inch on November 3, 2010 (PCSACS)*

Tank Waste Volume = 1,884 *gallons*

2

4.37 244-UR VAULT/ TK-UR-001

Stabilization Evaluation Form: 1985-06-27
Solids Level Reading = 9.50-in
Solids Level Reading Date = 1984-07
Waste Level ("Liquid Level") Reading = 11.50-in
Waste Level ("Liquid Level") Reading Date = 1984-07

The 244-UR and 244-CR process vaults use identical cell and vessel designs and dimensions, including process cell floor slope and sump size, and process vessel internals. Calibration tables for 244-CR Vault process vessel and process cell volumes are published in RPP-CALC-24219 Rev. 0, *244-CR Vault Tank and Cell Volume Calculations*, Tables 1-5. 244-UR vault sumps are shown on Drawings H-2-40199 and H-2-40202; and vault tanks on Drawings H-2-40078, H-2-40086 and H-2-40094. Refer to the Design Equivalency discussion following the 244-UR Vault / TK-UR-004 section.

Calibration Table: RPP-CALC-24219, Rev. 0, *244-CR Vault Tank and Cell Volume Calculations*, Table 1

$$Waste\ Volume = 11.50 - in = 425\ gallons$$
$$Waste\ Volume = 425\ gallons/(1000\ gallons/kilogallon)$$
$$Waste\ Volume = 0.42\ kilogallons$$

$$Solids\ Volume = 9.50 - in = 291\ gallons$$

$$Liquid\ Volume = Waste\ Volume - Solids\ Volume$$
$$Liquid\ Volume = 425\ gallons\ - 291\ gallons$$
$$Liquid\ Volume = 134\ gallons$$

244-UR Vault / TK-UR-001 Calibration Table

RPP-CALC-24219, Rev. 0 **Page** 18 **of** 25

Title: 244-CR Vault Tank and Cell Volume Calculations **Identifier:** P-06-18 **Rev:** 0

Originator: AB Carlson **Date:** 1/10/05

Checker: MM Durst **Date:** 1/10/05

Organizational Manager: MJ Sutey **Date:** 1/13/05

Table 1. Volume as a Function of Liquid Level for Tanks TK-CR-001 and TK-CR-011 (2 pages)

Ht. (in.)	Vol. (gal)	Ht. (in.)	Vol. (gal)	Ht. (in.)	Vol. (gal)	Ht. (in.)	Vol. (gal)	Ht. (in.)	Vol. (gal)	Ht. (in.)	Vol. (gal)	Ht. (in.)	Vol. (gal)	Ht. (in.)	Vol. (gal)
0	0	14.5	672	28.75	2590	43	5309	57.5	8148	72	10988	86.5	13828	101	16667
0.25	0.2	14.75	696	29	2634	43.25	5358	57.75	8197	72.25	11037	86.75	13877	101.25	16716
0.5	0.8	15	719	29.25	2678	43.5	5407	58	8246	72.5	11086	87	13926	101.5	16765
0.75	1.8	15.25	743	29.5	2723	43.75	5456	58.25	8295	72.75	11135	87.25	13975	101.75	16814
1	3.3	15.5	767	29.75	2768	44	5505	58.5	8344	73	11184	87.5	14024	102	16863
1.25	5.1	15.75	792	30	2813	44.25	5554	58.75	8393	73.25	11233	87.75	14073	102.25	16912
1.5	7.3	16	817	30.25	2858	44.5	5603	59	8442	73.5	11282	88	14122	102.5	16961
1.75	10	16.25	842	30.5	2904	44.75	5651	59.25	8491	73.75	11331	88.25	14170	102.75	17010
2	13	16.5	868	30.75	2949	45	5700	59.5	8540	74	11380	88.5	14219	103	17059
2.25	16	16.75	894	31	2995	45.25	5749	59.75	8589	74.25	11429	88.75	14268	103.25	17108
2.5	20	17	921	31.25	3041	45.5	5798	60	8638	74.5	11478	89	14317	103.5	17157
2.75	25	17.25	948	31.5	3088	45.75	5847	60.25	8687	74.75	11527	89.25	14366	103.75	17206
3	29	17.5	975	31.75	3134	46	5896	60.5	8736	75	11576	89.5	14415	104	17255
3.25	34	17.75	1003	32	3181	46.25	5945	60.75	8785	75.25	11625	89.75	14464	104.25	17304
3.5	40	18	1031	32.25	3227	46.5	5994	61	8834	75.5	11674	90	14513	104.5	17353
3.75	46	18.25	1060	32.5	3274	46.75	6043	61.25	8883	75.75	11722	90.25	14562	104.75	17402
4	52	18.5	1088	32.75	3321	47	6092	61.5	8932	76	11771	90.5	14611	105	17451
4.25	59	18.75	1118	33	3368	47.25	6141	61.75	8981	76.25	11820	90.75	14660	105.25	17500
4.5	66	19	1147	33.25	3415	47.5	6190	62	9030	76.5	11869	91	14709	105.5	17549
4.75	73	19.25	1177	33.5	3463	47.75	6239	62.25	9079	76.75	11918	91.25	14758	105.75	17598
5	81	19.5	1208	33.75	3510	48	6288	62.5	9128	77	11967	91.5	14807	106	17647
5.25	89	19.75	1238	34	3558	48.25	6337	62.75	9177	77.25	12016	91.75	14856	106.25	17696
5.5	98	20	1269	34.25	3606	48.5	6386	63	9226	77.5	12065	92	14905	106.5	17745
5.75	107	20.25	1301	34.5	3653	48.75	6435	63.25	9274	77.75	12114	92.25	14954	106.75	17794
6	117	20.5	1333	34.75	3701	49	6484	63.5	9323	78	12163	92.5	15003	107	17842
6.25	126	20.75	1365	35	3749	49.25	6533	63.75	9372	78.25	12212	92.75	15052	107.25	17891
6.5	137	21	1397	35.25	3797	49.5	6582	64	9421	78.5	12261	93	15101	107.5	17940
6.75	147	21.25	1430	35.5	3845	49.75	6631	64.25	9470	78.75	12310	93.25	15150	107.75	17989
7	158	21.5	1464	35.75	3894	50	6680	64.5	9519	79	12359	93.5	15199	108	18038
7.25	170	21.75	1497	36	3942	50.25	6729	64.75	9568	79.25	12408	93.75	15248	108.25	18087
7.5	182	22	1532	36.25	3990	50.5	6778	65	9617	79.5	12457	94	15297	108.5	18136
7.75	194	22.25	1566	36.5	4039	50.75	6826	65.25	9666	79.75	12506	94.25	15346	108.75	18185
8	207	22.5	1601	36.75	4087	51	6875	65.5	9715	80	12555	94.5	15394	109	18234
8.25	220	22.75	1636	37	4136	51.25	6924	65.75	9764	80.25	12604	94.75	15443	109.25	18283
8.5	233	23	1671	37.25	4184	51.5	6973	66	9813	80.5	12653	95	15492	109.5	18332
8.75	247	23.25	1707	37.5	4233	51.75	7022	66.25	9862	80.75	12702	95.25	15541	109.75	18381
9	261	23.5	1744	37.75	4282	52	7071	66.5	9911	81	12751	95.5	15590	110	18430
9.25	276	23.75	1780	38	4330	52.25	7120	66.75	9960	81.25	12800	95.75	15639	110.25	18479
9.5	291	24	1817	38.25	4379	52.5	7169	67	10009	81.5	12849	96	15688	110.5	18528
9.75	306	24.25	1855	38.5	4428	52.75	7218	67.25	10058	81.75	12898	96.25	15737	110.75	18577
10	322	24.5	1893	38.75	4477	53	7267	67.5	10107	82	12946	96.5	15786	111	18626
10.25	338	24.75	1931	39	4526	53.25	7316	67.75	10156	82.25	12995	96.75	15835	111.25	18675
10.5	355	25	1969	39.25	4574	53.5	7365	68	10205	82.5	13044	97	15884	111.5	18724
10.75	372	25.25	2008	39.5	4623	53.75	7414	68.25	10254	82.75	13093	97.25	15933	111.75	18773
11	389	25.5	2047	39.75	4672	54	7463	68.5	10303	83	13142	97.5	15982	112	18822
11.25	407	25.75	2087	40	4721	54.25	7512	68.75	10352	83.25	13191	97.75	16031	112.25	18871
11.5	425	26	2127	40.25	4770	54.5	7561	69	10401	83.5	13240	98	16080	112.5	18920
11.75	443	26.25	2167	40.5	4819	54.75	7610	69.25	10450	83.75	13289	98.25	16129	112.75	18969
12	462	26.5	2208	40.70*	4859	55	7659	69.5	10498	84	13338	98.5	16178	113	19018
12.25	481	26.75	2249	40.75	4868	55.25	7708	69.75	10547	84.25	13387	98.75	16227	113.25	19066
12.5	501	27	2290	41	4917	55.5	7757	70	10596	84.5	13436	99	16276	113.5	19115
12.75	521	27.25	2332	41.25	4966	55.75	7806	70.25	10645	84.75	13485	99.25	16325	113.75	19164
13	542	27.5	2374	41.5	5015	56	7855	70.5	10694	85	13534	99.5	16374	114	19213
13.25	562	27.75	2417	41.75	5064	56.25	7904	70.75	10743	85.25	13583	99.75	16423	114.25	19262
13.5	584	27.89*	2440	42	5113	56.5	7953	71	10792	85.5	13632	100	16472	114.5	19311
13.75	605	28	2459	42.25	5162	56.75	8002	71.25	10841	85.75	13681	100.25	16521	114.75	19360
14	627	28.25	2503	42.5	5211	57	8050	71.5	10890	86	13730	100.5	16570	115	19409
14.25	650	28.5	2546	42.75	5260	57.25	8099	71.75	10939	86.25	13779	100.75	16618	115.25	19458

Title: 244-CR Vault Tank and Cell Volume Calculations **Identifier:** P-06-18 Rev: 0
Originator: AB Carlson **Date:** 1/10/05
Checker: MM Durst **Date:** 1/10/05
Organizational Manager: MJ Sutey **Date:** 1/12/05

Table 1. Volume as a Function of Liquid Level for Tanks TK-CR-001 and TK-CR-011 (2 pages)

Ht. (in.)	Vol. (gal)	Ht. (in.)	Vol. (gal)	Ht. (in.)	Vol. (gal)	Ht. (in.)	Vol. (gal)	Ht. (in.)	Vol. (gal)	Ht. (in.)	Vol. (gal)	Ht. (in.)	Vol. (gal)	Ht. (in.)	Vol. (gal)
115.5	19507	128.75	22102	142	24697	155.25	27292	168.5	29887	181.75	32481	195	35076	208.25	37671
115.75	19556	129	22151	142.25	24746	155.5	27341	168.75	29936	182	32530	195.25	35125	208.5	37720
116	19605	129.25	22200	142.5	24795	155.75	27390	169	29985	182.25	32579	195.5	35174	208.75	37769
116.25	19654	129.5	22249	142.75	24844	156	27439	169.25	30033	182.5	32628	195.75	35223	209	37818
116.5	19703	129.75	22298	143	24893	156.25	27488	169.5	30082	182.75	32677	196	35272	209.25	37867
116.75	19752	130	22347	143.25	24942	156.5	27537	169.75	30131	183	32726	196.25	35321	209.5	37916
117	19801	130.25	22396	143.5	24991	156.75	27585	170	30180	183.25	32775	196.5	35370	209.75	37965
117.25	19850	130.5	22445	143.75	25040	157	27634	170.25	30229	183.5	32824	196.75	35419	210	38014
117.5	19899	130.75	22494	144	25089	157.25	27683	170.5	30278	183.75	32873	197	35468	210.25	38063
117.75	19948	131	22543	144.25	25137	157.5	27732	170.75	30327	184	32922	197.25	35517	210.5	38112
118	19997	131.25	22592	144.5	25186	157.75	27781	171	30376	184.25	32971	197.5	35566	210.75	38161
118.25	20046	131.5	22641	144.75	25235	158	27830	171.25	30425	184.5	33020	197.75	35615	211	38210
118.5	20095	131.75	22689	145	25284	158.25	27879	171.5	30474	184.75	33069	198	35664	211.25	38259
118.75	20144	132	22738	145.25	25333	158.5	27928	171.75	30523	185	33118	198.25	35713	211.5	38308
119	20193	132.25	22787	145.5	25382	158.75	27977	172	30572	185.25	33167	198.5	35762	211.75	38357
119.25	20242	132.5	22836	145.75	25431	159	28026	172.25	30621	185.5	33216	198.75	35811	212	38406
119.5	20290	132.75	22885	146	25480	159.25	28075	172.5	30670	185.75	33265	199	35860	212.25	38455
119.75	20339	133	22934	146.25	25529	159.5	28124	172.75	30719	186	33314	199.25	35909	212.5	38504
120	20388	133.25	22983	146.5	25578	159.75	28173	173	30768	186.25	33363	199.5	35958	212.75	38553
120.25	20437	133.5	23032	146.75	25627	160	28222	173.25	30817	186.5	33412	199.75	36007	213	38601
120.5	20486	133.75	23081	147	25676	160.25	28271	173.5	30866	186.75	33461	200	36056	213.25	38650
120.75	20535	134	23130	147.25	25725	160.5	28320	173.75	30915	187	33510	200.25	36105	213.5	38699
121	20584	134.25	23179	147.5	25774	160.75	28369	174	30964	187.25	33559	200.5	36153	213.75	38748
121.25	20633	134.5	23228	147.75	25823	161	28418	174.25	31013	187.5	33608	200.75	36202	214	38797
121.5	20682	134.75	23277	148	25872	161.25	28467	174.5	31062	187.75	33657	201	36251	214.25	38846
121.75	20731	135	23326	148.25	25921	161.5	28516	174.75	31111	188	33705	201.25	36300	214.5	38895
122	20780	135.25	23375	148.5	25970	161.75	28565	175	31160	188.25	33754	201.5	36349	214.75	38944
122.25	20829	135.5	23424	148.75	26019	162	28614	175.25	31209	188.5	33803	201.75	36398	215	38993
122.5	20878	135.75	23473	149	26068	162.25	28663	175.5	31257	188.75	33852	202	36447	215.25	39042
122.75	20927	136	23522	149.25	26117	162.5	28712	175.75	31306	189	33901	202.25	36496	215.5	39091
123	20976	136.25	23571	149.5	26166	162.75	28761	176	31355	189.25	33950	202.5	36545	215.75	39140
123.25	21025	136.5	23620	149.75	26215	163	28809	176.25	31404	189.5	33999	202.75	36594	216	39189
123.5	21074	136.75	23669	150	26264	163.25	28858	176.5	31453	189.75	34048	203	36643	216.25	39238
123.75	21123	137	23718	150.25	26313	163.5	28907	176.75	31502	190	34097	203.25	36692	216.5	39287
124	21172	137.25	23767	150.5	26361	163.75	28956	177	31551	190.25	34146	203.5	36741	216.75	39336
124.25	21221	137.5	23816	150.75	26410	164	29005	177.25	31600	190.5	34195	203.75	36790	217	39385
124.5	21270	137.75	23865	151	26459	164.25	29054	177.5	31649	190.75	34244	204	36839	217.25	39434
124.75	21319	138	23913	151.25	26508	164.5	29103	177.75	31698	191	34293	204.25	36888	217.5	39483
125	21368	138.25	23962	151.5	26557	164.75	29152	178	31747	191.25	34342	204.5	36937	217.75	39532
125.25	21417	138.5	24011	151.75	26606	165	29201	178.25	31796	191.5	34391	204.75	36986	218	39581
125.5	21466	138.75	24060	152	26655	165.25	29250	178.5	31845	191.75	34440	205	37035	218.25	39630
125.75	21514	139	24109	152.25	26704	165.5	29299	178.75	31894	192	34489	205.25	37084	218.5	39679
126	21563	139.25	24158	152.5	26753	165.75	29348	179	31943	192.25	34538	205.5	37133	218.75	39728
126.25	21612	139.5	24207	152.75	26802	166	29397	179.25	31992	192.5	34587	205.75	37182	219	39776
126.5	21661	139.75	24256	153	26851	166.25	29446	179.5	32041	192.75	34636	206	37231	219.25	39825
126.75	21710	140	24305	153.25	26900	166.5	29495	179.75	32090	193	34685	206.25	37280	219.5	39874
127	21759	140.25	24354	153.5	26949	166.75	29544	180	32139	193.25	34734	206.5	37329	219.75	39923
127.25	21808	140.5	24403	153.75	26998	167	29593	180.25	32188	193.5	34783	206.75	37377	220	39972
127.5	21857	140.75	24452	154	27047	167.25	29642	180.5	32237	193.75	34832	207	37426	220.25	40021
127.75	21906	141	24501	154.25	27096	167.5	29691	180.75	32286	194	34881	207.25	37475	220.5	40070
128	21955	141.25	24550	154.5	27145	167.75	29740	181	32335	194.25	34929	207.5	37524	220.70^	40110
128.25	22004	141.5	24599	154.75	27194	168	29789	181.25	32384	194.5	34978	207.75	37573		
128.5	22053	141.75	24648	155	27243	168.25	29838	181.5	32433	194.75	35027	208	37622		

Footnotes:

* Transition from flange dish to knuckle dish

\# Transition from knuckle dish to straight section of tank

^ Maximum fill height of tank

4.38 244-UR VAULT / SUMP-UR-001

Stabilization Evaluation Form: 1985-06-27
Solids Level Reading = 12.75-in
Solids Level Reading Date = 1984-07
Waste Level ("Liquid Level") Reading = 16.75-in
Waste Level ("Liquid Level") Reading Date = 1984-06-26

The 244-UR and 244-CR process vaults use identical cell and vessel designs and dimensions, including process cell floor slope and sump size, and process vessel internals. Calibration tables for 244-CR Vault process vessel and process cell volumes are published in RPP-CALC-24219 Rev. 0, *244-CR Vault Tank and Cell Volume Calculations*, Tables 1-5. 244-UR vault sumps are shown on Drawings H-2-40199 and H-2-40202; and vault tanks on Drawings H-2-40078, H-2-40086 and H-2-40094. Refer to the Design Equivalency discussion following the 244-UR Vault / TK-UR-004 section

Calibration Table: RPP-CALC-24219, Rev. 0, *244-CR Vault Tank and Cell Volume Calculations,* Table 3

$$Waste\ Volume = 16.75 - in = 1178\ gallons$$
$$Waste\ Volume = 1178\ gallons/(1000\ gallons/kilogallon)$$
$$Waste\ Volume = 1.2\ kilogallons$$

$$Solids\ Volume = 12.75 - in = 62\ gallons$$

$$Liquid\ Volume = Waste\ Volume - Solids\ Volume$$
$$Liquid\ Volume = 1178\ gallons - 62\ gallons$$
$$Liquid\ Volume = 1116\ gallons$$

244-UR Vault / SUMP-UR-001 Calibration Table

RPP-CALC-24219, Rev. 0 **Page** 22 **of** 25

Title: 244-CR Vault Tank and Cell Volume Calculations **Identifier:** P-06-18 **Rev:** 0

Originator: AB Carlson **Date:** 1/10/05

Checker: MM Durst **Date:** 1/10/05

Organizational Manager: MJ Sutey **Date:** 1/13/05

Table 3. Volume as a Function of Liquid Level for Cell CR-001
(As Measured from the Bottom of the Sump)

Ht. (in.)	Vol. (gal)	Ht. (in.)	Vol. (gal)	Ht. (in.)	Vol. (gal)	Ht. (in.)	Vol. (gal)	Ht. (in.)	Vol. (gal)	Ht. (in.)	Vol. (gal)
0	0	11.25	42	22.25	3138	33.5	6693	44.75	9462	56	11529
0.25	0.9	11.5	43	22.5	3226	33.75	6763	45	9515	56.25	11570
0.5	1.9	11.75	44	22.75	3313	34	6833	45.25	9568	56.5	11611
0.75	2.8	12*	45	23	3400	34.25	6902	45.5	9620	56.75	11652
1	3.7	12.25	47	23.25	3487	34.5	6971	45.75	9672	57	11693
1.25	4.7	12.5	52	23.5	3573	34.75	7039	46	9723	57.25	11734
1.5	5.6	12.75	62	23.75	3659	35	7107	46.25	9774	57.5	11775
1.75	6.5	13	77	24	3744	35.25	7175	46.5	9825	57.75	11816
2	7.5	13.25	100	24.25	3829	35.5	7242	46.75	9875	58	11856
2.25	8.4	13.5	132	24.5	3914	35.75	7309	47	9925	58.25	11897
2.5	9.4	13.75	174	24.75	3998	36	7375	47.25	9975	58.5	11937
2.75	10	14	228	25	4081	36.25	7441	47.5	10024	58.75	11978
3	11	14.25	294	25.25	4165	36.5	7507	47.75	10073	59	12018
3.25	12	14.5#	376	25.5	4248	36.75	7572	48	10121	59.25	12059
3.5	13	14.75	465	25.75	4330	37	7637	48.25	10170	59.5	12099
3.75	14	15	554	26	4413	37.25	7702	48.5	10217	59.75	12139
4	15	15.25	643	26.25	4494	37.5	7766	48.75	10265	60	12179
4.25	16	15.5	732	26.5	4576	37.75	7830	49	10312	60.25	12220
4.5	17	15.75	822	26.75	4657	38	7893	49.25	10359	60.5	12260
4.75	18	16	911	27	4737	38.25	7956	49.5	10405	60.75	12300
5	19	16.25	1000	27.25	4817	38.5	8019	49.75	10451	61	12340
5.25	20	16.5	1089	27.5	4897	38.75	8081	50	10497	61.25	12380
5.5	21	16.75	1178	27.75	4977	39	8143	50.25	10542	61.5	12420
5.75	22	17	1267	28	5056	39.25	8204	50.5	10587	61.75	12460
6	22	17.25	1356	28.25	5134	39.5	8265	50.75	10632	62	12500
6.25	23	17.5	1446	28.5	5212	39.75	8326	51	10676	62.25	12541
6.5	24	17.75	1535	28.75	5290	40	8387	51.25	10721	62.5**	12581
6.75	25	18	1624	29	5367	40.25	8446	51.5	10765	62.75	12621
7	26	18.25	1713	29.25	5444	40.5	8506	51.75	10809	63	12661
7.25	27	18.5	1802	29.5	5521	40.75	8565	52	10852	63.25	12701
7.5	28	18.75	1891	29.75	5597	41	8624	52.25	10896	63.5	12741
7.75	29	19	1980	30	5673	41.25	8683	52.5	10939	63.75	12781
8	30	19.25	2070	30.25	5748	41.5	8741	52.75	10982	64	12821
8.25	31	19.5	2159	30.5	5823	41.75	8799	53	11025	64.25	12861
8.5	32	19.75	2248	30.75	5898	42	8856	53.25	11068	64.5	12901
8.75	33	20	2337	31	5972	42.25	8913	53.5	11110	64.75	12941
9	34	20.25	2426	31.25	6046	42.5	8970	53.75	11153	65	12981
9.25	35	20.5	2515	31.5	6120	42.75	9026	54	11195	65.25	13021
9.5	36	20.75	2604	31.75	6193	43	9082	54.25	11237	65.5	13061
9.75	36	21	2694	32	6265	43.25	9137	54.5	11279	65.75	13101
10	37	21.25	2783	32.25	6338	43.5	9192	54.75	11321	66	13141
10.25	38	21.5	2872	32.5	6409	43.75	9247	55	11363		
10.5	39	21.57^	2896	32.75	6481	44	9301	55.25	11404		
10.75	40	21.75	2961	33	6552	44.25	9355	55.5	11446		
11	41	22	3049	33.25	6623	44.5	9409	55.75	11487		

Footnotes:

* Top of Sump/Low Point of Floor

\# High Point of Floor

^ Bottom of tank TK-CR-001

** Transition between tank dished head and straight side of tank

4.39 244-UR VAULT / TK-UR-002

Stabilization Evaluation Form: 1985-07-12
Solids Level Reading = 24.25-in
Solids Level Reading Date = 1984-07-11
Waste Level ("Liquid Level") Reading = 26.50-in
Waste Level ("Liquid Level") Reading Date = 1984-07-11

The 244-UR and 244-CR process vaults use identical cell and vessel designs and dimensions, including process cell floor slope and sump size, and process vessel internals. Calibration tables for 244-CR Vault process vessel and process cell volumes are published in RPP-CALC-24219 Rev. 0, *244-CR Vault Tank and Cell Volume Calculations*, Tables 1-5. 244-UR vault sumps are shown on Drawings H-2-40199 and H-2-40202; and vault tanks on Drawings H-2-40078, H-2-40086 and H-2-40094. Refer to the Design Equivalency discussion following the 244-UR Vault / TK-UR-004 section

Calibration Table: RPP-CALC-24219, Rev. 0, *244-CR Vault Tank and Cell Volume Calculations*, Table 2

$$Waste\ Volume = 26.50 - in = 1451\ gallons$$
$$Waste\ Volume = 1451\ gallons/(1000\ gallons/kilogallon)$$
$$Waste\ Volume = 1.5\ kilogallons$$

$$Solids\ Volume = 24.25 - in = 1244\ gallons\ (24.25 - in)$$

$$Liquid\ Volume = Waste\ Volume - Solids\ Volume$$
$$Liquid\ Volume = 1451\ gallons - 1244\ gallons)$$
$$Liquid\ Volume = 207\ gallons$$

244-UR Vault / TK-UR-002 Calibration Table

RPP-CALC-24219, Rev. 0 Page 20 of 25

Title: 244-CR Vault Tank and Cell Volume Calculations **Identifier:** P-06-18 **Rev:** 0

Originator: AB Carlson **Date:** 1/10/05

Checker: MM Durst **Date:** 1/10/05

Organizational Manager: MJ Sutey **Date:** 1/13/05

Table 2. Volume as a Function of Liquid Level for Tanks TK-CR-002 and TK-CR-003 (2 pages)

Ht. (in.)	Vol. (gal)	Ht. (in.)	Vol. (gal)	Ht. (in.)	Vol. (gal)	Ht. (in.)	Vol. (gal)	Ht. (in.)	Vol. (gal)	Ht. (in.)	Vol. (gal)
0	0	10.5	247	20.5	915	30.75	1845	41.25	2819	51.75	3794
0.25	0.1	10.75	258	20.75	936	31	1868	41.5	2843	52	3817
0.5	0.6	11	270	21	957	31.25	1891	41.75	2866	52.25	3840
0.75	1.3	11.25	283	21.25	979	31.5	1914	42	2889	52.5	3863
1	2.3	11.5	295	21.5	1000	31.75	1938	42.25	2912	52.75	3887
1.25	3.6	11.75	308	21.75	1022	32	1961	42.5	2935	53	3910
1.5	5.1	12	321	22	1044	32.25	1984	42.75	2959	53.25	3933
1.75	7.0	12.25	335	22.25	1066	32.5	2007	43	2982	53.5	3956
2	9.1	12.5	348	22.5	1088	32.75	2030	43.25	3005	53.75	3979
2.25	12	12.75	362	22.75	1110	33	2054	43.5	3028	54	4003
2.5	14	13	376	23	1132	33.25	2077	43.75	3051	54.25	4026
2.75	17	13.25	391	23.25	1154	33.5	2100	44	3075	54.5	4049
3	20	13.5	405	23.5	1177	33.75	2123	44.25	3098	54.75	4072
3.25	24	13.75	420	23.75	1199	34	2146	44.5	3121	55	4096
3.5	28	14	435	24	1222	34.25	2170	44.75	3144	55.25	4119
3.75	32	14.25	451	24.25	1244	34.5	2193	45	3167	55.5	4142
4	36	14.5	467	24.5	1267	34.75	2216	45.25	3191	55.75	4165
4.25	41	14.75	483	24.75	1290	35	2239	45.5	3214	56	4188
4.5	46	15	499	25	1313	35.25	2262	45.75	3237	56.25	4212
4.75	51	15.25	515	25.25	1336	35.5	2286	46	3260	56.5	4235
5	57	15.5	532	25.5	1359	35.75	2309	46.25	3283	56.75	4258
5.25	62	15.75	549	25.75	1382	36	2332	46.5	3307	57	4281
5.5	68	16	566	26	1405	36.25	2355	46.75	3330	57.25	4304
5.75	75	16.25	584	26.25	1428	36.5	2378	47	3353	57.5	4328
6	81	16.5	602	26.5	1451	36.75	2402	47.25	3376	57.75	4351
6.25	88	16.75	620	26.75	1474	37	2425	47.5	3399	58	4374
6.5	95	17	638	27	1497	37.25	2448	47.75	3423	58.25	4397
6.75	103	17.25	657	27.25	1520	37.5	2471	48	3446	58.5	4420
7	110	17.5	675	27.5	1543	37.75	2495	48.25	3469	58.75	4444
7.25	118	17.75	695	27.75	1566	38	2518	48.5	3492	59	4467
7.5	127	18	714	28	1590	38.25	2541	48.75	3515	59.25	4490
7.75	135	18.25	733	28.25	1613	38.5	2564	49	3539	59.5	4513
8	144	18.5	753	**28.48^**	1634	38.75	2587	49.25	3562	59.75	4536
8.25	153	**18.53***	755	28.5	1636	39	2611	49.5	3585	60	4560
8.5	162	18.75	773	28.75	1659	39.25	2634	49.75	3608	60.25	4583
8.75	172	19	792	29	1682	39.5	2657	50	3631	60.5	4606
9	182	19.25	812	29.25	1706	39.75	2680	50.25	3655	60.75	4629
9.25	192	19.5	832	29.5	1729	40	2703	50.5	3678	61	4652
9.5	202	**19.53#**	834	29.75	1752	40.25	2727	50.75	3701	61.25	4676
9.75	213	19.75	852	30	1775	40.5	2750	51	3724	61.5	4699
10	224	20	873	30.25	1798	40.75	2773	51.25	3747	61.75	4722
10.25	235	20.25	894	30.5	1822	41	2796	51.5	3771	62	4745

Title: 244-CR Vault Tank and Cell Volume Calculations **Identifier:** P-06-18 Rev: 0
Originator: AB Carlson **Date:** 1/10/05
Checker: MM Durst **Date:** 1/10/05
Organizational Manager: MJ Sutey **Date:** 1/12/05

Table 2. Volume as a Function of Liquid Level for Tanks TK-CR-002 and TK-CR-003 (2 pages)

Ht. (in.)	Vol. (gal)	Ht. (in.)	Vol. (gal)	Ht. (in.)	Vol. (gal)	Ht. (in.)	Vol. (gal)	Ht. (in.)	Vol. (gal)	Ht. (in.)	Vol. (gal)
62.25	4768	71.5	5633	81	6545	90.5	7457	100	8368	109.5	9280
62.5	4792	71.75	5657	81.25	6569	90.75	7481	100.25	8392	109.75	9304
62.75	4815	72	5681	81.5	6593	91	7505	100.5	8416	110	9328
63	4838	72.25	5705	81.75	6617	91.25	7528	100.75	8440	110.25	9352
63.25	4861	72.5	5729	82	6641	91.5	7552	101	8464	110.5	9376
63.5	4884	72.75	5753	82.25	6665	91.75	7576	101.25	8488	110.75	9400
63.75	4908	73	5777	82.5	6689	92	7600	101.5	8512	111	9424
64	4931	73.25	5801	82.75	6713	92.25	7624	101.75	8536	111.25	9448
64.25	4954	73.5	5825	83	6737	92.5	7648	102	8560	111.5	9472
64.5	4977	73.75	5849	83.25	6761	92.75	7672	102.25	8584	111.75	9496
64.75	5000	74	5873	83.5	6785	93	7696	102.5	8608	112	9520
65	5024	74.25	5897	83.75	6809	93.25	7720	102.75	8632	112.25	9544
65.25	5047	74.5	5921	84	6833	93.5	7744	103	8656	112.5	9568
65.5	5070	74.75	5945	84.25	6857	93.75	7768	103.25	8680	112.75	9592
65.75	5093	75	5969	84.5	6881	94	7792	103.5	8704	113	9616
66	5116	75.25	5993	84.75	6905	94.25	7816	103.75	8728	113.25	9640
66.25	5140	75.5	6017	85	6929	94.5	7840	104	8752	113.5	9664
66.5	5163	75.75	6041	85.25	6953	94.75	7864	104.25	8776	113.75	9688
66.75	5186	76	6065	85.5	6977	95	7888	104.5	8800	114	9712
67	5209	76.25	6089	85.75	7001	95.25	7912	104.75	8824	114.25	9736
67.25	5232	76.5	6113	86	7025	95.5	7936	105	8848	114.5	9760
67.5	5256	76.75	6137	86.25	7049	95.75	7960	105.25	8872	114.75	9784
67.75	5279	77	6161	86.5	7073	96	7984	105.5	8896	115	9808
68	5302	77.25	6185	86.75	7097	96.25	8008	105.75	8920	115.25	9832
68.25	5325	77.5	6209	87	7121	96.5	8032	106	8944	115.5	9856
68.5	5348	77.75	6233	87.25	7145	96.75	8056	106.25	8968	115.75	9880
68.75	5372	78	6257	87.5	7169	97	8080	106.5	8992	116	9904
69	5395	78.25	6281	87.75	7193	97.25	8104	106.75	9016	116.25	9928
69.25	5418	78.5	6305	88	7217	97.5	8128	107	9040	116.5	9952
69.48**	5439	78.75	6329	88.25	7241	97.75	8152	107.25	9064	116.75	9976
69.5	5441	79	6353	88.5	7265	98	8176	107.5	9088	117	10000
69.75	5465	79.25	6377	88.75	7289	98.25	8200	107.75	9112	117.25	10023
70	5489	79.5	6401	89	7313	98.5	8224	108	9136	117.5	10047
70.25	5513	79.75	6425	89.25	7337	98.75	8248	108.25	9160	117.75	10071
70.5	5537	80	6449	89.5	7361	99	8272	108.5	9184	118	10095
70.75	5561	80.25	6473	89.75	7385	99.25	8296	108.75	9208	118.25	10119
71	5585	80.5	6497	90	7409	99.5	8320	109	9232	**118.48@**	10141
71.25	5609	80.75	6521	90.25	7433	99.75	8344	109.25	9256		

Footnotes:
- * Bottom of coil
- # Transition from flange dish to knuckle dish
- ^ Transition from knuckle dish to straight section of tank
- ** Top of coil
- @ Maximum fill height of tank

4.40 244-UR VAULT / SUMP-UR-002

Stabilization Evaluation Form: 1985-07-09
Solids Level Reading = 11-in
Solids Level Reading Date = 1984-07-08
Waste Level ("Liquid Level") Reading = 11-in
Waste Level ("Liquid Level") Reading Date = 1984-07-08

The 244-UR and 244-CR process vaults use identical cell and vessel designs and dimensions, including process cell floor slope and sump size, and process vessel internals. Calibration tables for 244-CR Vault process vessel and process cell volumes are published in RPP-CALC-24219 Rev. 0, *244-CR Vault Tank and Cell Volume Calculations*, Tables 1-5. 244-UR vault sumps are shown on Drawings H-2-40199 and H-2-40202; and vault tanks on Drawings H-2-40078, H-2-40086 and H-2-40094. Refer to the Design Equivalency discussion following the 244-UR Vault / TK-UR-004 section

Calibration Table: RPP-CALC-24219 Rev. 0, *244-CR Vault Tank and Cell Volume Calculations* Table 4.

$$Waste\ Volume = 11 - in = 41\ gallons$$
$$Waste\ Volume = 41\ gallons/(1000\ gallons/kilogallon)$$
$$Waste\ Volume =< 0.10\ kilogallons$$

$$Solids\ Volume = 11 - in = 41\ gallons$$

$$Liquid\ Volume = Waste\ Volume - Solids\ Volume$$
$$Liquid\ Volume = 41\ gallons\ - 41\ gallons$$
$$Liquid\ Volume = 0\ gallons$$

244-UR Vault / SUMP-UR-002 Calibration Table

RPP-CALC-24219, Rev. 0 Page 23 of 25

Title: 244-CR Vault Tank and Cell Volume Calculations **Identifier:** P-06-18 Rev: 0

Originator: AB Carlson **Date:** 1/10/05

Checker: MM Durst **Date:** 1/10/05

Organizational Manager: MJ Sutey **Date:** 1/12/05

Table 4. Volume as a Function of Liquid Level for Cells CR-002 and CR-003
(As Measured from the Bottom of the Sump)

Ht. (in.)	Vol. (gal)	Ht. (in.)	Vol. (gal)	Ht. (in.)	Vol. (gal)	Ht. (in.)	Vol. (gal)	Ht. (in.)	Vol. (gal)	Ht. (in.)	Vol. (gal)
0	0	11.25	42	22.5	1925	33.5	3879	44.75	5343	56	6518
0.25	0.9	11.5	43	22.75	1975	33.75	3917	45	5370	56.25	6544
0.5	1.9	11.75	44	23	2025	34	3955	45.25	5397	56.5	6570
0.75	2.8	12*	45	23.14^	2052	34.25	3992	45.5	5424	56.75	6596
1	3.7	12.25	47	23.25	2074	34.5	4030	45.75	5451	57	6622
1.25	4.7	12.5	52	23.5	2124	34.75	4067	46	5478	57.25	6647
1.5	5.6	12.75	62	23.75	2173	35	4104	46.25	5505	57.5	6673
1.75	6.5	13	78	24	2222	35.25	4141	46.5	5531	57.75	6699
2	7.5	13.25	102	24.25	2271	35.5	4177	46.75	5558	58	6725
2.25	8.4	13.5	135	24.5	2320	35.75	4213	47	5584	58.25	6751
2.5	9.4	13.75#	179	24.75	2368	36	4249	47.25	5611	58.5	6777
2.75	10	14	229	25	2416	36.25	4285	47.5	5637	58.75	6802
3	11	14.25	279	25.25	2463	36.5	4320	47.75	5664	59	6828
3.25	12	14.5	329	25.5	2511	36.75	4355	48	5690	59.25	6854
3.5	13	14.75	379	25.75	2558	37	4390	48.25	5716	59.5	6880
3.75	14	15	429	26	2604	37.25	4424	48.5	5742	59.75	6906
4	15	15.25	479	26.25	2651	37.5	4459	48.75	5768	60	6932
4.25	16	15.5	529	26.5	2697	37.75	4493	49	5794	60.25	6957
4.5	17	15.75	578	26.75	2743	38	4526	49.25	5820	60.5	6983
4.75	18	16	628	27	2789	38.25	4560	49.5	5846	60.75	7009
5	19	16.25	678	27.25	2834	38.5	4593	49.75	5872	61	7035
5.25	20	16.5	728	27.5	2879	38.75	4626	50	5898	61.25	7061
5.5	21	16.75	778	27.75	2924	39	4659	50.25	5924	61.5	7087
5.75	22	17	828	28	2968	39.25	4691	50.5	5950	61.75	7112
6	22	17.25	878	28.25	3013	39.5	4723	50.75	5976	62	7138
6.25	23	17.5	927	28.5	3057	39.75	4755	51	6002	62.25	7164
6.5	24	17.75	977	28.75	3100	40	4787	51.25	6028	62.5	7190
6.75	25	18	1027	29	3144	40.25	4818	51.5	6053	62.75	7216
7	26	18.25	1077	29.25	3187	40.5	4850	51.75**	6079	63	7241
7.25	27	18.5	1127	29.5	3230	40.75	4881	52	6105	63.25	7267
7.5	28	18.75	1177	29.75	3272	41	4911	52.25	6131	63.5	7293
7.75	29	19	1227	30	3315	41.25	4942	52.5	6157	63.75	7319
8	30	19.25	1277	30.25	3357	41.5	4972	52.75	6183	64	7345
8.25	31	19.5	1326	30.5	3399	41.75	5002	53	6208	64.25	7371
8.5	32	19.75	1376	30.75	3440	42	5031	53.25	6234	64.5	7396
8.75	33	20	1426	31	3481	42.25	5061	53.5	6260	64.75	7422
9	34	20.25	1476	31.25	3522	42.5	5090	53.75	6286	65	7448
9.25	35	20.5	1526	31.5	3563	42.75	5119	54	6312	65.25	7474
9.5	36	20.75	1576	31.75	3603	43	5147	54.25	6338	65.5	7500
9.75	36	21	1626	32	3643	43.25	5176	54.5	6363	65.75	7526
10	37	21.25	1676	32.25	3683	43.5	5204	54.75	6389	66	7551
10.25	38	21.5	1725	32.5	3723	43.75	5232	55	6415		
10.5	39	21.75	1775	32.75	3762	44	5260	55.25	6441		
10.75	40	22	1825	33	3801	44.25	5288	55.5	6467		
11	41	22.25	1875	33.25	3840	44.5	5315	55.75	6492		

Footnotes:

* Top of Sump/Low Point of Floor

\# High Point of Floor

^ Bottom of tank TK-CR-002 or TK-CR-003

** Transition between tank dished head and straight side of tank

4.41 244-UR VAULT / TK-UR-003

Stabilization Evaluation Form: 1985-06-25
Solids Level Reading = 16.50-in
Solids Level Reading Date = 1984-07
Waste Level ("Liquid Level") Reading = 16.50-in
Waste Level ("Liquid Level") Reading Date = 1984-07

The 244-UR and 244-CR process vaults use identical cell and vessel designs and dimensions, including process cell floor slope and sump size, and process vessel internals. Calibration tables for 244-CR Vault process vessel and process cell volumes are published in RPP-CALC-24219 Rev. 0, *244-CR Vault Tank and Cell Volume Calculations*, Tables 1-5. 244-UR vault sumps are shown on Drawings H-2-40199 and H-2-40202; and vault tanks on Drawings H-2-40078, H-2-40086 and H-2-40094. Refer to the Design Equivalency discussion following the 244-UR Vault / TK-UR-004 section

Calibration Table: RPP-CALC-24219, Rev. 0, *244-CR Vault Tank and Cell Volume Calculations*, Table 2

$$Waste\ Volume = 16.50 - in = 602\ gallons$$
$$Waste\ Volume = 602\ gallons/(1000\ gallons/kilogallon)$$
$$Waste\ Volume = 0.60\ kilogallons$$

$$Solids\ Volume = 16.50 - in = 602\ gallons$$

$$Liquid\ Volume = Waste\ Volume - Solids\ Volume$$
$$Liquid\ Volume = 602\ gallons\ - 602\ gallons$$
$$Liquid\ Volume = 0\ gallons$$

244-UR Vault / TK-UR-003 Calibration Table

RPP-CALC-24219, Rev. 0 Page 20 of 25

Title: 244-CR Vault Tank and Cell Volume Calculations **Identifier:** P-06-18 Rev: 0

Originator: AB Carlson **Date:** 1/10/05

Checker: MM Durst **Date:** 1/10/05

Organizational Manager: MJ Sutey **Date:** 1/13/05

Table 2. Volume as a Function of Liquid Level for Tanks TK-CR-002 and TK-CR-003 (2 pages)

Ht. (in.)	Vol. (gal)	Ht. (in.)	Vol. (gal)	Ht. (in.)	Vol. (gal)	Ht. (in.)	Vol. (gal)	Ht. (in.)	Vol. (gal)	Ht. (in.)	Vol. (gal)
0	0	10.5	247	20.5	915	30.75	1845	41.25	2819	51.75	3794
0.25	0.1	10.75	258	20.75	936	31	1868	41.5	2843	52	3817
0.5	0.6	11	270	21	957	31.25	1891	41.75	2866	52.25	3840
0.75	1.3	11.25	283	21.25	979	31.5	1914	42	2889	52.5	3863
1	2.3	11.5	295	21.5	1000	31.75	1938	42.25	2912	52.75	3887
1.25	3.6	11.75	308	21.75	1022	32	1961	42.5	2935	53	3910
1.5	5.1	12	321	22	1044	32.25	1984	42.75	2959	53.25	3933
1.75	7.0	12.25	335	22.25	1066	32.5	2007	43	2982	53.5	3956
2	9.1	12.5	348	22.5	1088	32.75	2030	43.25	3005	53.75	3979
2.25	12	12.75	362	22.75	1110	33	2054	43.5	3028	54	4003
2.5	14	13	376	23	1132	33.25	2077	43.75	3051	54.25	4026
2.75	17	13.25	391	23.25	1154	33.5	2100	44	3075	54.5	4049
3	20	13.5	405	23.5	1177	33.75	2123	44.25	3098	54.75	4072
3.25	24	13.75	420	23.75	1199	34	2146	44.5	3121	55	4096
3.5	28	14	435	24	1222	34.25	2170	44.75	3144	55.25	4119
3.75	32	14.25	451	24.25	1244	34.5	2193	45	3167	55.5	4142
4	36	14.5	467	24.5	1267	34.75	2216	45.25	3191	55.75	4165
4.25	41	14.75	483	24.75	1290	35	2239	45.5	3214	56	4188
4.5	46	15	499	25	1313	35.25	2262	45.75	3237	56.25	4212
4.75	51	15.25	515	25.25	1336	35.5	2286	46	3260	56.5	4235
5	57	15.5	532	25.5	1359	35.75	2309	46.25	3283	56.75	4258
5.25	62	15.75	549	25.75	1382	36	2332	46.5	3307	57	4281
5.5	68	16	566	26	1405	36.25	2355	46.75	3330	57.25	4304
5.75	75	16.25	584	26.25	1428	36.5	2378	47	3353	57.5	4328
6	81	16.5	602	26.5	1451	36.75	2402	47.25	3376	57.75	4351
6.25	88	16.75	620	26.75	1474	37	2425	47.5	3399	58	4374
6.5	95	17	638	27	1497	37.25	2448	47.75	3423	58.25	4397
6.75	103	17.25	657	27.25	1520	37.5	2471	48	3446	58.5	4420
7	110	17.5	675	27.5	1543	37.75	2495	48.25	3469	58.75	4444
7.25	118	17.75	695	27.75	1566	38	2518	48.5	3492	59	4467
7.5	127	18	714	28	1590	38.25	2541	48.75	3515	59.25	4490
7.75	135	18.25	733	28.25	1613	38.5	2564	49	3539	59.5	4513
8	144	18.5	753	**28.48^**	1634	38.75	2587	49.25	3562	59.75	4536
8.25	153	**18.53***	755	28.5	1636	39	2611	49.5	3585	60	4560
8.5	162	18.75	773	28.75	1659	39.25	2634	49.75	3608	60.25	4583
8.75	172	19	792	29	1682	39.5	2657	50	3631	60.5	4606
9	182	19.25	812	29.25	1706	39.75	2680	50.25	3655	60.75	4629
9.25	192	19.5	832	29.5	1729	40	2703	50.5	3678	61	4652
9.5	202	**19.53***	834	29.75	1752	40.25	2727	50.75	3701	61.25	4676
9.75	213	19.75	852	30	1775	40.5	2750	51	3724	61.5	4699
10	224	20	873	30.25	1798	40.75	2773	51.25	3747	61.75	4722
10.25	235	20.25	894	30.5	1822	41	2796	51.5	3771	62	4745

RPP-CALC-24219, Rev. 0 Page 21 of 25

Title: 244-CR Vault Tank and Cell Volume Calculations **Identifier:** P-06-18 Rev: 0

Originator: AB Carlson **Date:** 1/10/05

Checker: MM Durst **Date:** 1/10/05

Organizational Manager: MJ Sutey **Date:** 1/12/05

Table 2. Volume as a Function of Liquid Level for Tanks TK-CR-002 and TK-CR-003 (2 pages)

Ht. (in.)	Vol. (gal)	Ht. (in.)	Vol. (gal)	Ht. (in.)	Vol. (gal)	Ht. (in.)	Vol. (gal)	Ht. (in.)	Vol. (gal)	Ht. (in.)	Vol. (gal)
62.25	4768	71.5	5633	81	6545	90.5	7457	100	8368	109.5	9280
62.5	4792	71.75	5657	81.25	6569	90.75	7481	100.25	8392	109.75	9304
62.75	4815	72	5681	81.5	6593	91	7505	100.5	8416	110	9328
63	4838	72.25	5705	81.75	6617	91.25	7528	100.75	8440	110.25	9352
63.25	4861	72.5	5729	82	6641	91.5	7552	101	8464	110.5	9376
63.5	4884	72.75	5753	82.25	6665	91.75	7576	101.25	8488	110.75	9400
63.75	4908	73	5777	82.5	6689	92	7600	101.5	8512	111	9424
64	4931	73.25	5801	82.75	6713	92.25	7624	101.75	8536	111.25	9448
64.25	4954	73.5	5825	83	6737	92.5	7648	102	8560	111.5	9472
64.5	4977	73.75	5849	83.25	6761	92.75	7672	102.25	8584	111.75	9496
64.75	5000	74	5873	83.5	6785	93	7696	102.5	8608	112	9520
65	5024	74.25	5897	83.75	6809	93.25	7720	102.75	8632	112.25	9544
65.25	5047	74.5	5921	84	6833	93.5	7744	103	8656	112.5	9568
65.5	5070	74.75	5945	84.25	6857	93.75	7768	103.25	8680	112.75	9592
65.75	5093	75	5969	84.5	6881	94	7792	103.5	8704	113	9616
66	5116	75.25	5993	84.75	6905	94.25	7816	103.75	8728	113.25	9640
66.25	5140	75.5	6017	85	6929	94.5	7840	104	8752	113.5	9664
66.5	5163	75.75	6041	85.25	6953	94.75	7864	104.25	8776	113.75	9688
66.75	5186	76	6065	85.5	6977	95	7888	104.5	8800	114	9712
67	5209	76.25	6089	85.75	7001	95.25	7912	104.75	8824	114.25	9736
67.25	5232	76.5	6113	86	7025	95.5	7936	105	8848	114.5	9760
67.5	5256	76.75	6137	86.25	7049	95.75	7960	105.25	8872	114.75	9784
67.75	5279	77	6161	86.5	7073	96	7984	105.5	8896	115	9808
68	5302	77.25	6185	86.75	7097	96.25	8008	105.75	8920	115.25	9832
68.25	5325	77.5	6209	87	7121	96.5	8032	106	8944	115.5	9856
68.5	5348	77.75	6233	87.25	7145	96.75	8056	106.25	8968	115.75	9880
68.75	5372	78	6257	87.5	7169	97	8080	106.5	8992	116	9904
69	5395	78.25	6281	87.75	7193	97.25	8104	106.75	9016	116.25	9928
69.25	5418	78.5	6305	88	7217	97.5	8128	107	9040	116.5	9952
69.48**	5439	78.75	6329	88.25	7241	97.75	8152	107.25	9064	116.75	9976
69.5	5441	79	6353	88.5	7265	98	8176	107.5	9088	117	10000
69.75	5465	79.25	6377	88.75	7289	98.25	8200	107.75	9112	117.25	10023
70	5489	79.5	6401	89	7313	98.5	8224	108	9136	117.5	10047
70.25	5513	79.75	6425	89.25	7337	98.75	8248	108.25	9160	117.75	10071
70.5	5537	80	6449	89.5	7361	99	8272	108.5	9184	118	10095
70.75	5561	80.25	6473	89.75	7385	99.25	8296	108.75	9208	118.25	10119
71	5585	80.5	6497	90	7409	99.5	8320	109	9232	**118.48@**	10141
71.25	5609	80.75	6521	90.25	7433	99.75	8344	109.25	9256		

Footnotes:

* Bottom of coil

\# Transition from flange dish to knuckle dish

^ Transition from knuckle dish to straight section of tank

** Top of coil

@ Maximum fill height of tank

4.42 244-UR VAULT / SUMP-UR-003

Stabilization Evaluation Form: 1985-06-25
Solids Level Reading = 23.00-in
Solids Level Reading Date = 1984-07
Waste Level ("Liquid Level") Reading = 23.00-in
Waste Level ("Liquid Level") Reading Date = 1984-06-21

The 244-UR and 244-CR process vaults use identical cell and vessel designs and dimensions, including process cell floor slope and sump size, and process vessel internals. Calibration tables for 244-CR Vault process vessel and process cell volumes are published in RPP-CALC-24219 Rev. 0, *244-CR Vault Tank and Cell Volume Calculations*, Tables 1-5. 244-UR vault sumps are shown on Drawings H-2-40199 and H-2-40202; and vault tanks on Drawings H-2-40078, H-2-40086 and H-2-40094. Refer to the Design Equivalency discussion following the 244-UR Vault / TK-UR-004 section

Calibration Table: RPP-CALC-24219 Rev. 0, *244-CR Vault Tank and Cell Volume Calculations*, Table 4

$$Waste\ Volume = 23.00 - in = 3400\ gallons$$
$$Waste\ Volume = 3400\ gallons/(1000\ gallons/kilogallon)$$
$$Waste\ Volume = 3.4\ kilogallons$$

$$Solids\ Volume = 23.00 - in = 3400\ gallons$$

$$Liquid\ Volume = Waste\ Volume - Solids\ Volume$$
$$Liquid\ Volume = 3400\ gallons\ - 3400\ gallons$$
$$Liquid\ Volume = 0\ gallons$$

244-UR Vault / SUMP-UR-003 Calibration Table

RPP-CALC-24219, Rev. 0 **Page** 23 **of** 25

Title: 244-CR Vault Tank and Cell Volume Calculations **Identifier:** P-06-18 **Rev:** 0

Originator: AB Carlson **Date:** 1/10/05

Checker: MM Durst **Date:** 1/10/05

Organizational Manager: MJ Sutey **Date:** 1/12/05

Table 4. Volume as a Function of Liquid Level for Cells CR-002 and CR-003
(As Measured from the Bottom of the Sump)

Ht. (in.)	Vol. (gal)	Ht. (in.)	Vol. (gal)	Ht. (in.)	Vol. (gal)	Ht. (in.)	Vol. (gal)	Ht. (in.)	Vol. (gal)	Ht. (in.)	Vol. (gal)
0	0	11.25	42	22.5	1925	33.5	3879	44.75	5343	56	6518
0.25	0.9	11.5	43	22.75	1975	33.75	3917	45	5370	56.25	6544
0.5	1.9	11.75	44	23	2025	34	3955	45.25	5397	56.5	6570
0.75	2.8	**12***	45	**23.14^**	2052	34.25	3992	45.5	5424	56.75	6596
1	3.7	12.25	47	23.25	2074	34.5	4030	45.75	5451	57	6622
1.25	4.7	12.5	52	23.5	2124	34.75	4067	46	5478	57.25	6647
1.5	5.6	12.75	62	23.75	2173	35	4104	46.25	5505	57.5	6673
1.75	6.5	13	78	24	2222	35.25	4141	46.5	5531	57.75	6699
2	7.5	13.25	102	24.25	2271	35.5	4177	46.75	5558	58	6725
2.25	8.4	13.5	135	24.5	2320	35.75	4213	47	5584	58.25	6751
2.5	9.4	**13.75#**	179	24.75	2368	36	4249	47.25	5611	58.5	6777
2.75	10	14	229	25	2416	36.25	4285	47.5	5637	58.75	6802
3	11	14.25	279	25.25	2463	36.5	4320	47.75	5664	59	6828
3.25	12	14.5	329	25.5	2511	36.75	4355	48	5690	59.25	6854
3.5	13	14.75	379	25.75	2558	37	4390	48.25	5716	59.5	6880
3.75	14	15	429	26	2604	37.25	4424	48.5	5742	59.75	6906
4	15	15.25	479	26.25	2651	37.5	4459	48.75	5768	60	6932
4.25	16	15.5	529	26.5	2697	37.75	4493	49	5794	60.25	6957
4.5	17	15.75	578	26.75	2743	38	4526	49.25	5820	60.5	6983
4.75	18	16	628	27	2789	38.25	4560	49.5	5846	60.75	7009
5	19	16.25	678	27.25	2834	38.5	4593	49.75	5872	61	7035
5.25	20	16.5	728	27.5	2879	38.75	4626	50	5898	61.25	7061
5.5	21	16.75	778	27.75	2924	39	4659	50.25	5924	61.5	7087
5.75	22	17	828	28	2968	39.25	4691	50.5	5950	61.75	7112
6	22	17.25	878	28.25	3013	39.5	4723	50.75	5976	62	7138
6.25	23	17.5	927	28.5	3057	39.75	4755	51	6002	62.25	7164
6.5	24	17.75	977	28.75	3100	40	4787	51.25	6028	62.5	7190
6.75	25	18	1027	29	3144	40.25	4818	51.5	6053	62.75	7216
7	26	18.25	1077	29.25	3187	40.5	4850	**51.75****	6079	63	7241
7.25	27	18.5	1127	29.5	3230	40.75	4881	52	6105	63.25	7267
7.5	28	18.75	1177	29.75	3272	41	4911	52.25	6131	63.5	7293
7.75	29	19	1227	30	3315	41.25	4942	52.5	6157	63.75	7319
8	30	19.25	1277	30.25	3357	41.5	4972	52.75	6183	64	7345
8.25	31	19.5	1326	30.5	3399	41.75	5002	53	6208	64.25	7371
8.5	32	19.75	1376	30.75	3440	42	5031	53.25	6234	64.5	7396
8.75	33	20	1426	31	3481	42.25	5061	53.5	6260	64.75	7422
9	34	20.25	1476	31.25	3522	42.5	5090	53.75	6286	65	7448
9.25	35	20.5	1526	31.5	3563	42.75	5119	54	6312	65.25	7474
9.5	36	20.75	1576	31.75	3603	43	5147	54.25	6338	65.5	7500
9.75	36	21	1626	32	3643	43.25	5176	54.5	6363	65.75	7526
10	37	21.25	1676	32.25	3683	43.5	5204	54.75	6389	66	7551
10.25	38	21.5	1725	32.5	3723	43.75	5232	55	6415		
10.5	39	21.75	1775	32.75	3762	44	5260	55.25	6441		
10.75	40	22	1825	33	3801	44.25	5288	55.5	6467		
11	41	22.25	1875	33.25	3840	44.5	5315	55.75	6492		

Footnotes:

* Top of Sump/Low Point of Floor

\# High Point of Floor

^ Bottom of tank TK-CR-002 or TK-CR-003

** Transition between tank dished head and straight side of tank

4.43 244-UR VAULT / TK-UR-004

The 244-UR and 244-CR process vaults use identical cell and vessel designs and dimensions, including process cell floor slope and sump size, and process vessel internals. Calibration tables for 244-CR Vault process vessel and process cell volumes are published in RPP-CALC-24219 Rev. 0, *244-CR Vault Tank and Cell Volume Calculations*, Tables 1-5. 244-UR sumps are shown on Drawings H-2-40199 and H-2-40202; and tanks on Drawings H-2-40078, H-2-40086 and H-2-40094. Refer to the Design Equivalency discussion following the 244-UR Vault / TK-UR-003 section.

Tank 244-UR-TK-004 contained nitric acid used for waste processing and treatment. It was not used to contain radioactive waste. The 244-UR 004 process cell drained to cell 003 and did not have a separate sump.

All four process vaults, 244-BXR, 244-CR, 244-TXR and 244-UR, used an identical tank TK-004 that held HNO_3 used for waste treatment. The tanks were not intended to contain radioactive waste. Tank TK-UR-004 was the only tank of the four located inside the process vault structure. Dimensionally it is identical to TK-CR-004 and the others shown on drawing H-2-41107. It is a 10-ft outside diameter straight side tank. Drawing H-2-40094 notes that the tank was repurposed, and the tank details are available on BPF #72819, which could not be recovered from records archives.

Using the 10-ft diameter and neglecting wall thickness yields the following calibration:

$$Waste\ Volume\ per\ Inch\ Waste\ Height = \left(\pi\left(10 - ft/2\right)^2\right)/\left(12 - in/ft\right)\ x\ 7.48\ gallons/ft^3$$

$Waste\ Volume\ per\ Inch\ Waste\ Height = 48.96\ gallons$ for 0 – 168-in (0 – 14-ft) tank liquid levels.

$Waste\ Volume = Unattributed, undated\ data\ sheet\ states\ tank\ is\ "empty"$
$Waste\ Volume = No\ data$

244-UR Vault Basis for Waste Volume Estimate

244-UR Process Vault Basis for Waste Volume Estimate:

Cells UR-001, UR-002, and UR-003.
Sumps UR-001, UR-002, and UR-003, Cell UR-004 drains to Cell UR-003 and has no sump
Tanks TK-UR-001, TK-UR-002, TK-UR-003, and TK-UR-004

Prepared: May 26, 2014; Revised June 4, 2014
D. J. Washenfelder

References:

1. H-2-40078 Sheet 1 Rev. 3, *Vessel Assembly & Details 20'-0" x 19'-2" Tank TK-UR-001*
2. H-2-40086 Sheet 1 Rev. 5, *Mechanical Vessel Assembly 14'x12' Tank TK-UR-002 & TK-UR-003*
3. H-2-40094 Sheet 1, Rev. 1, *Vessel Redesign – Assembly & Details 10'-0"x14'0" Tank TK-UR-004 Phase I*
4. H-2-40199 Sheet 1 Rev. 2, *Structural Concrete – Plans and Details – Process Tank Vault*
5. H-2-40202 Sheet 2 Rev. 4, *Structural Concrete – Reinforcing Sections – Process Tank Vault*
6. H-2-41089 Sheet 1 Rev. 2, *Vessel Assemby & Details 14'-0" x 12' Tank - TK-CR-002, TK-CR-003, TK-BXR-002, TK-BXR-003, TK-TXR-002, TK-TXR-003*
7. H-2-41090 Sheet 1 Rev. 1, *Vessel Details 14'-0" x 12'-0" Tank TK-CR-002, TK-CR-003, TK-BXR-002, TK-BXR-003, TK-TXR-002, TK-TXR-003*
8. H-2-41688 Sheet 1 Rev. 3, *Vessel Assembly Details 20'-0" x 19'-2" Tank TK-CR-001, TK-BXR-001, TK-TXR-001*
9. H-2-41888 Sheet 1 Rev. 3, *Structural - Concrete Plans & Details - Process Tank Vault*
10. H-2-41889 Sheet 1 Rev. 2, *Structural - Concrete - Sections and Details - Process Tank Vault Sheet #1*
11. RPP-CALC-24219 Rev. 0, *244-CR Vault Tank and Cell Volume Calculations*
12. SD-WM-TI-302 Rev. 0, *Hanford Waste Tank Sluicing History*, 1987

The 244-UR and 244-CR process vault cells 001, 002, and 003 have identical cell and vessel designs and dimensions, including process cell floor slope and sump size, and process vessel internals. Equivalent drawings for the two process vaults are shown below.

1

244-UR and 244-CR Process Vault Design Equivalency		
Feature	244-UR Process Vault	244-CR Process Vault
Process Cell Design (Cells 001, 002, 003)	H-2-40199 H-2-40202	H-2-41888 H-2-41889
TK-001	H-2-40078	H-2-41688
TK-002, TK-003	H-2-40086	H-2-41089 H-2-41090
TK-004	H-2-40094	H-2-41107

Calibration tables for 244-CR Vault process vessel and process cell volumes are published in RPP-CALC-24219 Rev. 0, *244-CR Vault Tank and Cell Volume* Calculations, Tables 1 - 5. Since the 001, 002, and 003 process cell designs, and the TK-001, TK-002, and TK-003 and process vessel designs are identical for 244-UR and 244-CR Vaults, RPP-CALC-24219 is used for estimating the 244-UR waste volumes.

All four process vaults, 244-BXR, 244-CR, 244-TXR and 244-UR, used an identical tank TK-004 that held HNO_3 used for waste treatment. The tanks were not intended to contain radioactive waste. Tank TK-UR-004 was the only tank of the four located inside the process vault structure. Dimensionally it is identical to TK-CR-004 and the others shown on drawing H-2-41107. It is a 10-ft outside diameter straight side tank. Drawing H-2-40094 notes that the tank was repurposed, and the tank details are available on BPF #72819, which could not be recovered from records archives. Using the 10-ft diameter and neglecting wall thickness yields the following calibration:

TK-UR-004 Gallons per Inch Liquid Height:

$$Gallons\ per\ Inch\ Liquid\ Height = \pi\ x\ (\frac{10-ft\ x\ 12\frac{in}{ft}}{2})^2\ x\ 1-in\ x\ 0.004329\ gallons/in^3$$

$Gallons\ per\ Inch\ Liquid\ Height = 48.96\ gallons/in$ for 0 – 168-in (0 – 14-ft) tank liquid levels

2

244-UR Process Vault Waste Volumes:

Feature Identification	Liquid Data Date	Liquid Height (in)	Liquid Volume (gal)	Solids Data Date	Solids Height (in)	Solids Volume (gal)	Total Volume (gal)	Reference
TK-UR-001	07/1984	11.50	134	07/1984	9.50	291	425	1,2
TK-UR-001 Sump	06/26/1985	16.75	1116	07/1984	12.75	62	1178	1,2
TK-UR-002	07/11/1985	26.50	207	07/11/1985	24.25	1244	1451	1,2
TK-UR-002 Sump	07/08/1985	11	0	07/08/1985	11	41	41	1,2
TK-UR-003	07/1984	16.50	0	07/1984	16.50	602	602	1,2
TK-UR-003 Sump	06/21/1985	23.00	0	07/1984	23.00	3400	3400	1,2
TK-UR-004							Empty	3

Table Notes and References:
(1) Stabilization Evaluation Forms (attached)
(2) RPP-CALC-24219 Rev. 0, *244-CR Vault Tank and Cell Volume Calculations*
(3) TK-UR-004 was used to store HNO_3 used during 244-UR Vault processing (SD-WM-TI-302 Rev. 0, *Hanford Waste Tank Sluicing History*); unattributed data sheet indicates tank is "empty".

Calculations:

TK-UR-001, from RPP-CALC-24219 Rev. 0, Table 1:

$$Liquid\ Volume = 425\ gallons\ (11.50 - in) - 291\ gallons\ (9.50 - in)$$
$$Liquid\ Volume = 134\ gallons$$

$$Solids\ Volume = 291\ gallons\ (9.50 - in)$$

TK-UR-001 Sump, from RPP-CALC-24219 Rev. 0, Table 3:

$$Liquid\ Volume = 1178\ gallons\ (16.75 - in) - 62\ gallons\ (12.75 - in)$$
$$Liquid\ Volume = 1116\ gallons$$

$$Solids\ Volume = 62\ gallons\ (12.75 - in)$$

TK-UR-002, from RPP-CALC-24219 Rev. 0, Table 2:

$$Liquid\ Volume = 1451\ gallons\ (26.50 - in) - 1244\ \text{gallons}\ (24.25 - \text{in})$$
$$Liquid\ Volume = 207\ gallons$$

$$Solids\ Volume = 1244\ gallons\ (24.25 - in)$$

3

TK-UR-002 Sump, from RPP-CALC-24219 Rev. 0, Table 4:

$Liquid\ Volume = 41\ gallons\ (11 - in) - 41\ gallons\ (11 - in)$
$Liquid\ Volume = 0\ gallons$

$Solids\ Volume = 41\ gallons\ (11 - in)$

TK-UR-003, from RPP-CALC-24219 Rev. 0, Table 2:

$Liquid\ Volume = 602\ gallons\ (16.50 - in) - 602\ gallons\ (16.50 - in)$
$Liquid\ Volume = 0\ gallons$

$Solids\ Volume = 602\ gallons\ (16.50 - in)$

TK-UR-003 Sump, from RPP-CALC-24219 Rev. 0, Table 4:

$Liquid\ Volume = 3400\ gallons\ (23.00 - in) - 3400\ gallons\ (23.00 - in)$
$Liquid\ Volume = 0\ gallons$

$Solids\ Volume = 3400\ gallons\ (23.00 - in)$

TK-UR-004:

Liquid Volume = Unattributed, undated data sheet states tank is "empty"
Liquid Volume =

Solids Volume =

4

244-UR Vault Stabilization Evaluation Forms

5

STABILIZATION EVALUATION FORM

Tank: UR-001 TANK

Evaluation (see continuation page for calculations and additional comments):

(X) Tank history review completed

(X) Tank composition data reviewed

Tank Description: TANK USED FOR URANIUM RECOVERY FOR GEOMETRY OF TANK SEE ATTACHED SHEET

Solids Level: 9.50" Date: 7-84 Method: DOUGHNUT

Liquid Level: 11.50" Date: 7-84 Method: MANUAL TAPE AND FIELD MEASUREMENT

Estimated Supernatant Volume (gal): 390

Interim Stabilization Criteria: LESS THAN 4" SUPERNATANT
(400 gallons or the volume of four inches of supernatant, whichever is greater)

( ) Cost/Benefit Analysis attached

Evaluation performed by: Allen T. Alstad Date: 6-18-85

Checked by: [illegible] Date: [illegible]

Disposition of Tank:

(X) Tank Interim Stabilized at 390 gallons of supernatant liquid

( ) Tank not Interim Stabilized; stabilization activities resumed

Approved by: [illegible] 6/26/85
Manager, TF&EPC Date

[illegible] 6/26/85
Manager, TFS&O Date

R Olivetauch 6/27/85
Program Manager Date

DISTRIBUTION: TF&EPC Tank File, Tank Farm Surveillance Analysis, Approval Signatures

EVALUATION CALCULATIONS AND COMMENTS

Tank: UR-001

Tank Geometry:

OP OF RISER TO BOTTOM OF TANK 43'6"
TOP OF RISER TO BOTTOM OF SUMP 45'2 1/2"

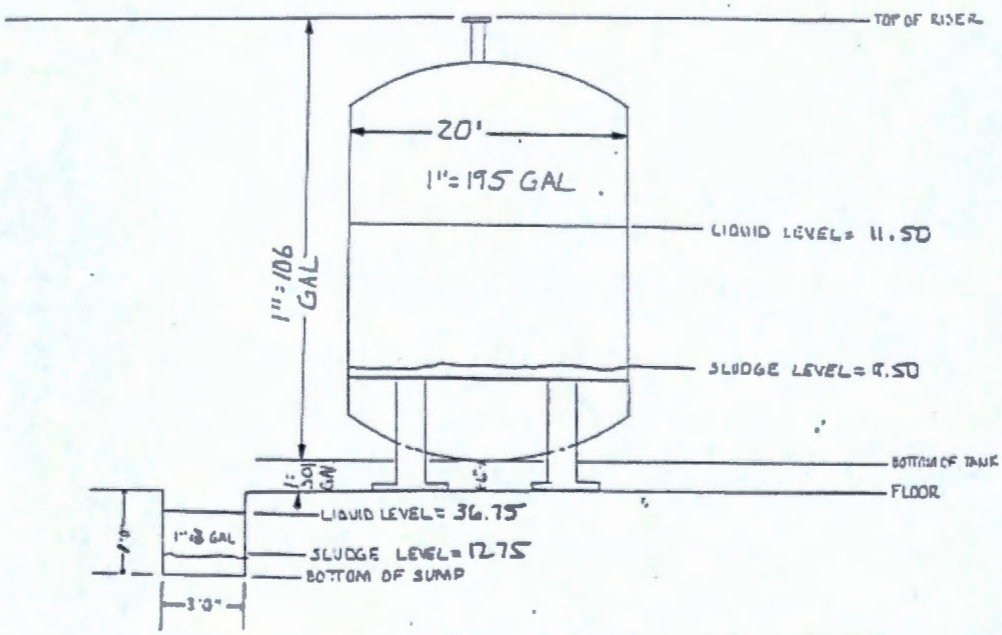

Calculations made by: Allen T. Alstad 6-18-85

Checked by: [illegible] 6-26-85

6

STABILIZATION EVALUATION FORM

Tank: UR-001 SUMP

Evaluation (see continuation page for calculations and additional comments):

(X) Tank history review completed

(X) Tank composition data reviewed

Tank Description: CELL SUMP

Solids Level: 12.75 Date: 7-84 Method: DOUGHNUT

Liquid Level: 16.75 Date: 6-26-85 Method: MANUAL TAPE AND FIELD MEASUREMENT

Estimated Supernatant Volume (gal): 272 GAL

Interim Stabilization Criteria: 4 inches
(400 gallons or the volume of four inches of supernatant, whichever is greater)

( ) Cost/Benefit Analysis attached

Evaluation performed by: Allen T. Alstad Date: 6-27-85

Checked by: [illegible] Date: 6-27-85

Disposition of Tank:

(X) Tank Interim Stabilized at 272 gallons of supernatant liquid

( ) Tank not Interim Stabilized; stabilization activities resumed

Approved by: [signature] Manager, TF&EPC 6/27/85 Date

[signature] Manager, XFS&O 6/27/85 Date

RD Wytsma Program Manager 6/27/85 Date

DISTRIBUTION: TF&EPC Tank File, Tank Farm Surveillance Analysis, Approval Signatures

EVALUATION CALCULATIONS AND COMMENTS

Tank: JR. 001

Tank Geometry:

TOP OF RISER TO BOTTOM OF TANK 43'6"
TOP OF RISER TO BOTTOM OF SUMP 45'2 1/2"

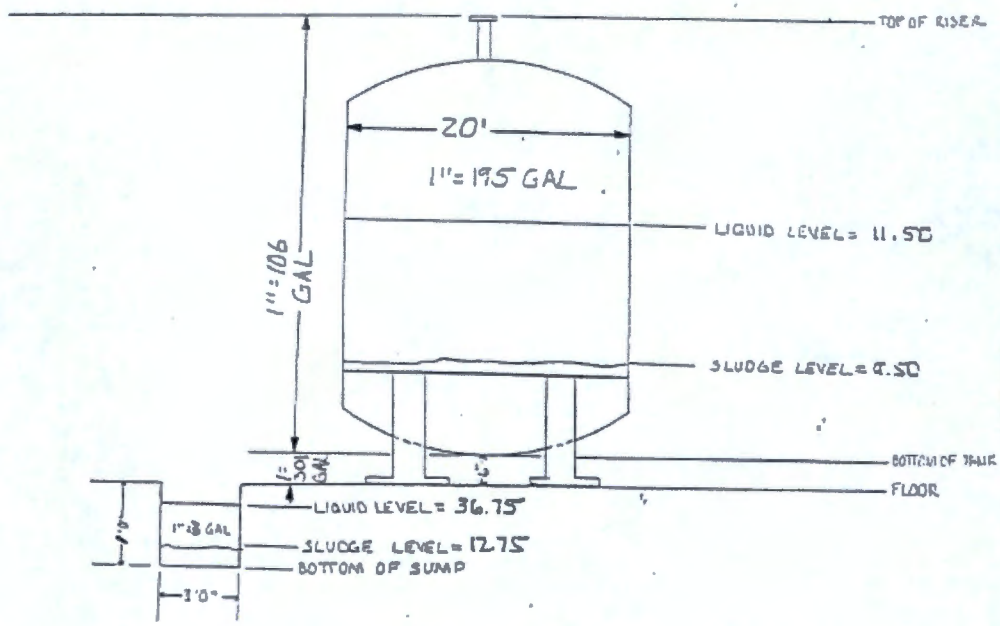

Calculations made by: Allen T. Olsted 6-27-85

Checked by: [illegible] 6-27-85

STABILIZATION EVALUATION FORM

Tank: UR-002 TANK

Evaluation (see continuation page for calculations and additional comments):

(X) Tank history review completed

(X) Tank composition data reviewed

Tank Description: TANK USED FOR URANIUM RECOVERY FOR GEOMETRY OF TANK SEE ATTACHED SHEET

Solids Level: 24.25 Date: 7-11-85 Method: DOUGHNUT

Liquid Level: 26.50 Date: 7-11-85 Method: ZIP CORD

Estimated Supernatant Volume (gal): 214 GAL

Interim Stabilization Criteria: LESS THAN 4 INCHES LIQUID
(400 gallons or the volume of four inches of supernatant, whichever is greater)

(✓) Cost/Benefit Analysis attached

Evaluation performed by: Allen T. Alston Date: 7-12-85

Checked by: [illegible] Date: 7-12-85

Disposition of Tank:

(✓) Tank Interim Stabilized at 214 gallons of supernatant liquid

( ) Tank not Interim Stabilized; stabilization activities resumed

Approved by: [illegible] 7/12/85
Manager, TF&EPC Date

[illegible] 7/12/85
Manager, TFS&O Date

R.D. Woytenek 7-12-85
Program Manager Date

DISTRIBUTION: TF&EPE Tank File, Tank Farm Surveillance Analysis, Approval Signatures

EVALUATION CALCULATIONS AND COMMENTS

Tank: UR-002

Tank Geometry:

TOP OF RISER TO BOTTOM OF TANK 33'6"
TOP OF RISER TO BOTTOM OF SUMP 35'1 3/4"

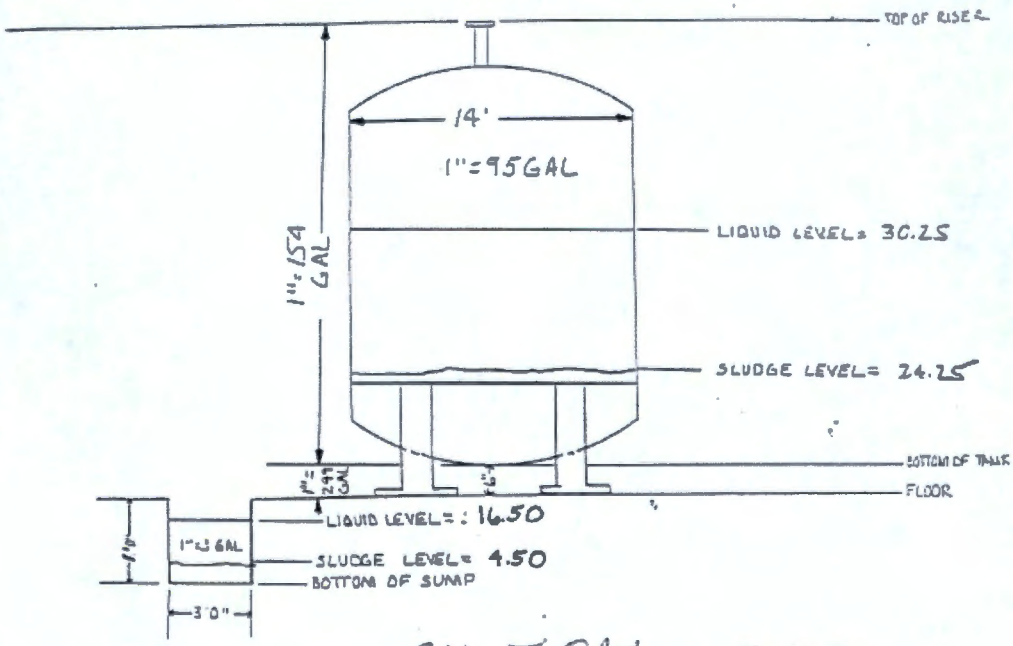

Calculations made by: Allen T. Alsted 7-12-85

Checked by: [illegible] 7-12-85

6

STABILIZATION EVALUATION FORM

Tank: UR-002 SUMP

Evaluation (see continuation page for calculations and additional comments):

( ) Tank history review completed

( ) Tank composition data reviewed

Tank Description: CELL SUMP

Solids Level: 11" Date: 7-3-85 Method: DOUGHNUT

Liquid Level: 11" Date: 7-3-85 Method: MANUAL TAPE AND FIELD MEASUREMENT

Estimated Supernatant Volume (gal): Ø GAL

Interim Stabilization Criteria: Ø GAL
(400 gallons or the volume of four inches of supernatant, whichever is greater)

(x) Cost/Benefit Analysis attached

Evaluation performed by: Allen T. Alstad Date: 7-5-85

Checked by: [illegible] Date: 1-9-85

Disposition of Tank:

(✓) Tank Interim Stabilized at Ø gallons of supernatant liquid

( ) Tank not Interim Stabilized; stabilization activities resumed

Approved by: [illegible] 7-7-85
Manager, TF&EPC Date

[illegible] 7-9-85
Manager, TFS&O Date

[illegible] 7-9-85
Program Manager for R.D. Wojnsek Date

DISTRIBUTION: TF&EPC Tank File, Tank Farm Surveillance Analysis, Approval Signatures

EVALUATION CALCULATIONS AND COMMENTS

Tank: UR-002

Tank Geometry:

TOP OF RISER TO BOTTOM OF TANK 33'6"
TOP OF RISER TO BOTTOM OF SUMP 35'1 3/4"

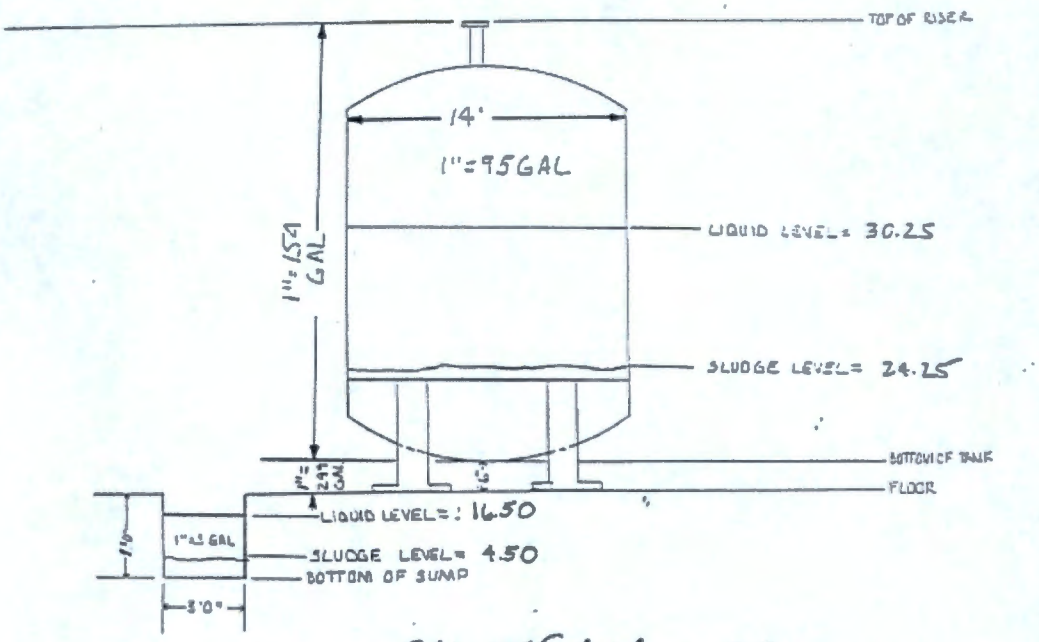

Calculations made by: [illegible] 7-8-85

Checked by: [illegible] 7-9-85

STABILIZATION EVALUATION FORM

Tank: UR-003 TANK

Evaluation (see continuation page for calculations and additional comments):

(X) Tank history review completed

(X) Tank composition data reviewed

Tank Description: TANK USED FOR URANIUM RECOVERY FOR GEOMETRY OF TANK SEE ATTACHED SHEET -

Solids Level: 16.50 Date: 7-84 Method: DAUGHNUT

Liquid Level: 16.50 Date: 7-84 Method: MANUAL TAPE AND FIELD MEASUREMENT

Estimated Supernatant Volume (gal): 0"

Interim Stabilization Criteria: 0
(400 gallons or the volume of four inches of supernatant, whichever is greater)

( ) Cost/Benefit Analysis attached

Evaluation performed by: Allen T. Alstad Date: 6-18-85

Checked by: [illegible] Date: 8-2-84 6/18/85

Disposition of Tank:

(X) Tank Interim Stabilized at 0 gallons of supernatant liquid

( ) Tank not Interim Stabilized; stabilization activities resumed

Approved by:

Manager, TF&EPC — 6/24/85 Date

Manager, TFS&O — 6/24/85 Date

Program Manager — 6/25/85 Date

DISTRIBUTION: TF&EPC Tank File, Tank Farm Surveillance Analysis, Approval Signatures

EVALUATION CALCULATIONS AND COMMENTS

Tank: UR-003 TANK

Tank Geometry:

TOP OF RISER TO BOTTOM OF TANK 35'6"
TOP OF RISER TO BOTTOM OF SUMP 35' 13/4"

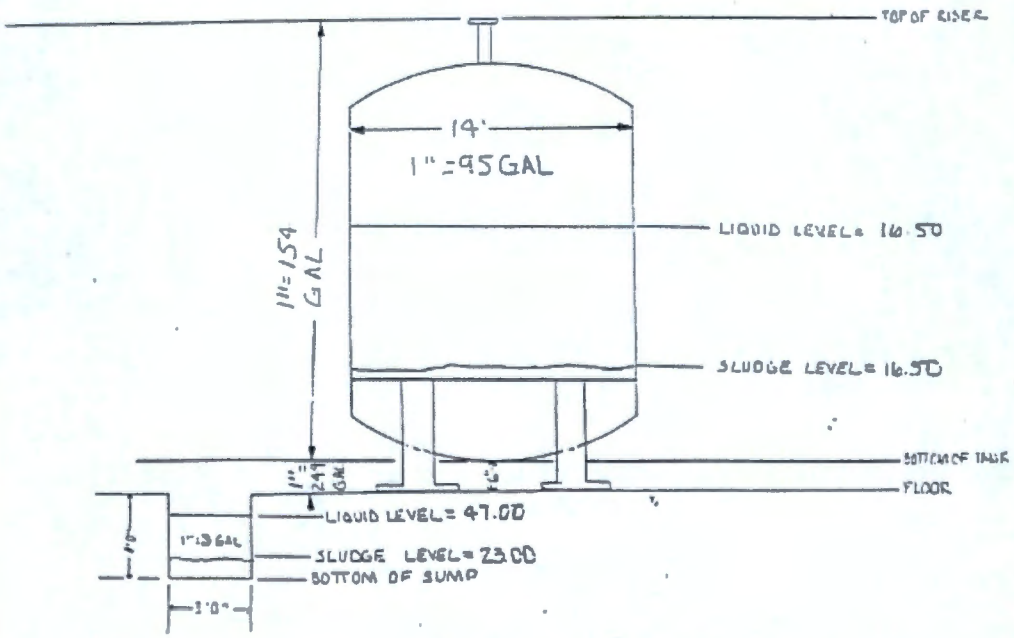

Calculations made by: Allen T. Alstad 6-21-85

Checked by: E.W. Esau 6-21-85

STABILIZATION EVALUATION FORM

Tank: UR-003 SUMP

Evaluation (see continuation page for calculations and additional comments):

(X) Tank history review completed

(X) Tank composition data reviewed

Tank Description: CELL SUMP

Solids Level: 23.00 Date: 7-84 Method: DOUGHNUT

Liquid Level: 23.00 Date: 6-21-85 Method: MANUAL TAPE AND FIELD MEASUREMENT

Estimated Supernatant Volume (gal): 0 GAL

Interim Stabilization Criteria: 0 inches
(400 gallons or the volume of four inches of supernatant, whichever is greater)

( ) Cost/Benefit Analysis attached

Evaluation performed by: [signature] Date: 6-21-85

Checked by: [signature] Date: 6-21-85

Disposition of Tank:

(X) Tank Interim Stabilized at Ø gallons of supernatant liquid

( ) Tank not Interim Stabilized; stabilization activities resumed

Approved by: [signature] Manager, TF&EPC — 6/24/85 Date

[signature] Manager, TFS&O — 6/24/85 Date

[signature] Program Manager — 6/25/85 Date

DISTRIBUTION: TF&EPC Tank File, Tank Farm Surveillance Analysis, Approval Signatures

EVALUATION CALCULATIONS AND COMMENTS

Tank: UR-003 TANK

Tank Geometry:

TOP OF RISER TO BOTTOM OF TANK 35'6"
TOP OF RISER TO BOTTOM OF SUMP 35' 13/16"

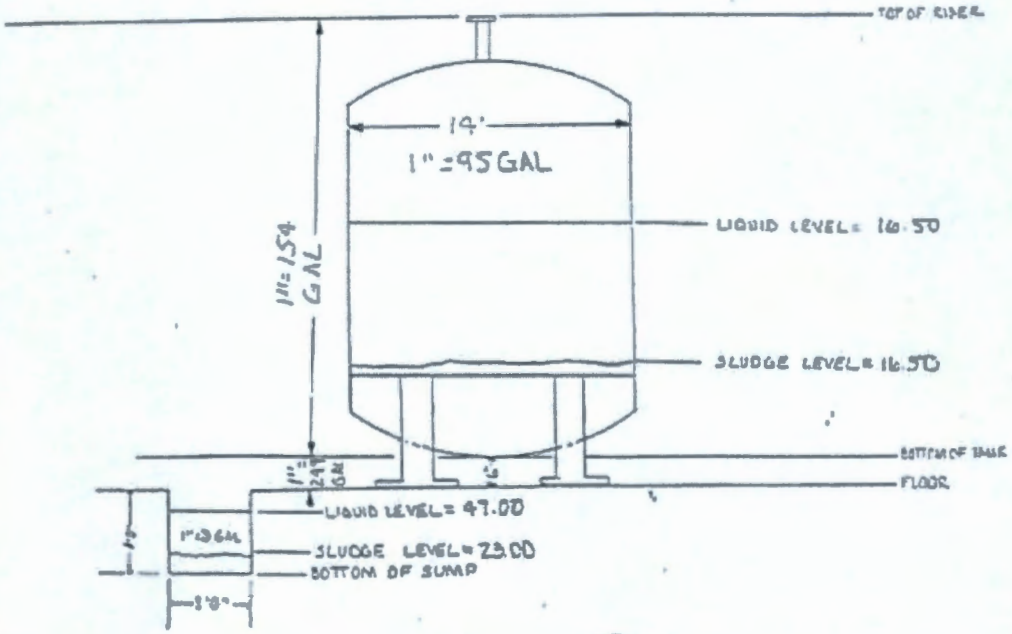

Calculations made by: Allen T. Alstad 6-21-85

Checked by: Edwards 6-21-85

UR VAULT 3236

TANK	VOLUME (GAL)	SOLIDS (GAL)	LIQUID (GAL)	AVAILABLE SPACE (GAL)
TK-001-UR	50,000	1600	900	48,400
SUMP-001-UR	—	5,000	4500	—
TK-002-UR	15,000	600	600	14,400
SUMP-002-UR	—	1200	6700	—
TK-003-UR	15,000	240	1500	14,760
SUMP-003-UR	—	900	4600	—

VAULT ISOLATION

EMPTIED TANKS
BLANKED SOME LINES
PLACED MASTIC
OVER COVERBLOCKS

VAULTS WERE ORIGINALLY TREATED W/ HCL, THEN PAINTED.

INTEGRITY OF VAULTS AND TANKS WAS GOOD WHEN THEY WERE ISOLATED.
SHOULD BE CHECKED.

001312

244-UR-004

Category:	Vault	Priority:	2B
Location:	200W	Coordinates:	N38390/W75750
Dimensions:	14' high by 10' dia.	Nominal Capacity:	8,230 gals.
Construction Material:	Type 347, 11 gauge stainless steel	Total Waste Volume:	Empty
Sludge Volume:	0 gals.	Supernatant Volume:	0 Gals.
Arrangement:	Vertical	Association:	Temporary storage of 60% nitric acid used in waste conditioning and treatment.
Period of Operation:	1952 to 1976 (?)	Current Status:	Isolated

Suspected Waste Types:

Any residual liquid in the tank should consist of non-radioactive acidic waste.

Potential Safety Issues:

Hydrogen Buildup:	Low - tank is empty.
Ferrocyanide:	Low -
Organic Salts:	Low - no data to estimate wt% total of organic carbon or to calculate temperature.
High Heat:	Low - tank is empty.
Flammability:	Low - same as organic salts.
Vapor Emission:	Low - same as organic salts.
Tank Integrity:	Low - tank is empty.
Radiological Hazard:	Low - tank is empty.
Criticality Safety:	Low - tank is empty.

Other:

Environmental monitoring consists of routine radiation surveys, airborne radionuclide monitoring and visual inspections.

5.0 REFERENCES

Aromi, E. S., CH2M HILL Hanford Group, Inc. to R. J. Schepens, U.S. Department of Energy Office of River Protection, *Contract Number DE-AC27-99RL14047 – Completion of Hanford Federal Facility Agreement and Consent Order Milestone M-48-07, "Submit to Ecology A Disposition Plan For All Double-Shell Tank Components Not In Use Post 2005" Action*, CH2M-05020302, dated August 3, 2005

Butts, H. L., Pacific Northwest Laboratories to C. B. Foster, Atlantic Richfield Hanford Co. *231-W-151 Sump Tanks*, dated August 15, 1974

Double-Shell Tank System/204-AR Waste Unloading Station Dangerous Waste Permit Application Part A Form, dated December 14, 2009

Dunning, A. B., Washington River Protections Solutions, LLC to S. E. Bechtol, U.S. Department of Energy Office of River Protection, *Contract Number DE-AC27-08RV14800 – Washington River Protection Solutions LLC Completion of Performance Based Incentive Fee 1.5.1, Remove Liquids from the Secondary Containment of the 244-CR Vault – Request for Incremental Fee Approval*, WRPS-1000848, dated April 28, 2010

ECN-627576, Rev.0, *Incorporation and Revision of Catch Tank Specification Limits / N1853*, Westinghouse Hanford Company, Richland, WA 99352

ECN-630520, Rev. 0, *Incorporation of Catch Tank Specification Limits in SD-WM-TI-352, N1743*, Westinghouse Hanford Company, Richland, WA 99352

ECN-641242, Rev. 0, *Modifications to SD-WM-TI-352*, CH2M HILL Hanford Group, Inc., Richland, WA 99352

ECN E525-1-016, Rev. 1, *241-AZ-151 Catch Tank Bypass*, CH2M HILL Hanford Group, Inc., Richland, WA 99352

EM-RL-CHG-TANKFARM-2002-0083, Final Occurrence Report, *Video Surveillance Reveals Catch Tank TA-R1 Floating Off of Its Foundation at 245-TA Vault*, dated October 17, 2002

Hanford Federal Facility Agreement and Consent Order Action Plan (HFFACO) *Appendix B TSD Groups/Units*, dated February 15, 2014

Hanford Federal Facility Agreement and Consent Order Action Plan (HFFACO) *Appendix C Prioritized List of Operable Units*, dated May 9, 2012

Hendrickson, S. S. to D. J. Washenfelder, Washington River Protection Solutions LLC, *Tank Farm Catch Tank* Calibrations, WRPS-0901391, dated August 14, 2009

HNF-2503, Rev. 0, *Authorization Basis Status Report (Miscellaneous TWRS Facilities, Tanks and Components*, 1998, Lockheed Martin Hanford Corporation, Richland, WA 99352

HNF-EP-0182, latest revision, *Waste Tank Summary Report*, Washington River Protection Solutions LLC, Richland, WA 99352

Niebuhr, D. P. to D. J. Washenfelder, Washington River Protection Solutions LLC, *Re: Tank C-100 As-Left Condition*, dated October 20, 2008

Oberg, G. C. to M. L. Short, Atlantic Richfield Hanford Company, *Removal of Solution from Two 231-W-151 Tanks*, dated March 3, 1975

Olinger, S. J., DOE-ORP to J. A. Hedges, Department of Ecology, State of Washington, *Submittal of Notification of Completion of Liquid Removal from Catch Tank 241-ER-311*, 07-TOD-026, dated March 30, 2007

Panesko, J. V., Atlantic Richfield Hanford Company, *Final Report: 216-Z-8 Transfer*, undated

RHO-CD-1410, Rev. 0, *242-T Evaporator Facility Shutdown/Standby Plan*, 1981, Rockwell Hanford Operations, Richland, WA 99352

RPP-12051 Rev. 0, *244-AR Vault Stabilization Completion Report*, 2003, CH2M HILL Hanford Group, Inc., Richland, WA 99352

RPP-39167, *Report of Closure for By-Passing the 244-U Double Contained Receiver Tank (DCRT) during Saltwell Pumping (NOC ID 360)*, U.S. Department of Energy Office of River Protection, Richland, WA 99352

RPP-9937 Rev. 3D, *Single-Shell Tank System Leak Detection and Monitoring Functions and Requirements Document*, 2014, Washington River Protection Solutions LLC, Richland, WA 99352

RPP-CALC-24219, Rev. 0, *244-CR Vault Tank and Cell Volume Calculations*, 2005, Duratek Federal Services Northwest, Richland, WA 99352

RPP-RPT-24257 Rev. 0, *244-CR Vault Liquid Level Assessment and Video Inspection Completion Report*, 2005, Duratek Federal Services Northwest, Richland, WA 99352

RPP-RPT-29711 Rev. 0, *Tank 241-UX-302A Leak Assessment Report*, 2006, CH2M HILL Hanford Group, Inc., Richland, WA 99352

RPP-RPT-31102 Rev. 0, *Catch Tank 241-AX-151 Liquid Level Assessment Report*, 2006, CH2M HILL Hanford Group, Inc., Richland, WA 99352

RPP-RPT-31130, Rev. 0, *241-BY-ITS2-TK-2 Liquid Level Assessment*, 2006, CH2M HILL Hanford Group, Inc., Richland, WA 99352

RPP-RPT-31779 Rev. 0 *241-UX-302A Catch Tank Liquid Mitigation Completion Report*, 2006, CH2M HILL Hanford Group, Inc., Richland, WA 99352

RPP-RPT-42789 Rev. 0, *Completion of Removal of Pumpable Liquid from 241-UX-302A*, 2009, Washington River Protection Solutions LLC, Richland, WA 99352

RPP-RPT-45845 Rev. 0 *Completion of Pumpable Removal from 244-CR Vault*, 2010, Washington River Protection Solutions LLC, Richland, WA 99352

Schepens, R. J., DOE-ORP to J. A. Hedges, Washington State Department of Ecology, *Notification of Completion of Pumping Liquids from Catch Tank 241-UX-302A and Start of Evaporation of Liquid from Catch Tank 241-ER-311*, 06-TOD-090, dated November 1, 2006

SD-RE-TI-057, Rev. 0, *Tank Farms Catch Tanks – Calibration Tables*, 1982, Rockwell Hanford Operations, Richland, WA 99352

Single-Shell Tank Dangerous Waste Permit Application Part A Form, dated May 31, 2011, U.S. Department of Energy, Richland, WA 99352

Stickney, R. G., to S. H. Norton, Westinghouse Hanford Company, *Disposal of Rain/Sanitary Water*, 87250-SWES-91-022, dated March 19, 1991

WHC-SD-WM-WP-069, Rev. 1, *Engineering Work Plan – Sealing Leak in Catch Tank 241-S-302-A*, 1991, Westinghouse Hanford Company, Richland, WA 99352