1246846
[0067760H]

SEP 11 1989 48
Sta. #4

ENGINEERING DATA TRANSMITTAL

Page 1 of 1

1. EDT 117809

2. To: (Receiving Organization)
Tank Farms Plant Engineering

3. From: (Originating Organization)
Tank Farm Support Process Engineering

4. Related EDT No:
N/A

5. Proj/Prog/Dept/Div:

6. Cog/Proj Engr:

7. Purchase Order No:
N/A

8. Originator Remarks: This SD provides technical justification for raising the Operating Specification for crib 216-S-26 from 23.5" to 36"; 100% of the crib's capacity.

9. Equip/Component No:
N/A

10. System/Bldg/Facility:
Crib 216-S-26

11. Receiver Remarks:
Original EDT was lost. DBC. 9/7/89

12. Major Assm Dwg No:
N/A

13. Permit/Permit Application No.
N/A

14. Required Response Date:
July 31, 1989

15. DATA TRANSMITTED

(A) Item No.	(B) Document/Drawing No.	(C) Sheet No.	(D) Rev No.	(E) Title or Description of Data Transmitted	(F) Impact Level	(G) Reason for Transmittal	(H) Originator Disposition	(I) Receiver Disposition
1	WHC-SD-WM-TI-390		0	Technical Justification for 216-S-26 Crib Operating Specification Increase	2	1		

RECEIVED NOV 13 2017 EDMC

16. KEY

Impact Level (F)	Reason for Transmittal (G)	Disposition (H) & (I)
1, 2, 3, or 4 see MRP 5.43 and EP-1.7	1. Approval 2. Release 3. Information 4. Review 5. Post-Review 6. Dist (Receipt Acknow. Required)	1. Approved 2. Approved w/comment 3. Disapproved w/comment 4. Reviewed no/comment 5. Reviewed w/comment 6. Receipt acknowledged

17. SIGNATURE/DISTRIBUTION (See Impact Level for required signatures)

(G) Reason	(H) Disp	(J) Name	(K) Signature	(L) Date	(M) MSIN	(J) Name	(K) Signature	(L) Date	(M) MSIN	(G) Reason	(H) Disp
			DBC	9/7/89							
1	1	Cog./Proj. Eng	David B. Eb	7/31/89	R1-51						
1	1	Cog./Proj. Eng. Mgr.	Joel Clark	8/2/89	R1-51						
1	1	QA	Eldon Ramos	8-2-89	S1-52						
1		Safety	Jack Walker	8/25/89	S3-09						
1		Env. Protect.	S. M. Mahnney	8-2-89	T1-30						
1		Tank Farms Opns.	T D Blankenship	8-31-89							
1		222-S Laboratory	Stan Berg	8-3-89	TC-2						

18.	19.	20.	21.
David B. Eb 8/25/89 Signature of EDT Originator Date	8/31/89 Authorized Representative for Receiving Organization Date	Joel Clark 8/2/89 Cognizant/Project Engineer's Manager Date	DOE APPROVAL (if required) Ltr No. ☐ Approved ☐ Approved w/comments ☐ Disapproved w/comments

BD-7400-172 (2/89)

SUPPORTING DOCUMENT

1. Page 1 of 43

2. Title	3. Number	4. Rev. No.
Technical Justification for 216-S-26 Crib Operating Specification Increase	WHC-SD-WM-TI-390	0

5. Key Words

216-S-26 Crib
222-S Laboratory
207-SL Retention Basin
Operating Specification Limits

6. Author

D. B. Erb
Name (Type or Print)
Signature
W13331
Organization Code

7. Abstract

The Operating Specification Limit for the 216-S-26 Crib has been increased in OSD-T-151-00018 from 23.5 inches to 36 inches. This document provides the technical justification for the increase and is attributed to the very low, and frequently undetectable, levels of radionuclide and hazardous materials concentration.

8. PURPOSE AND USE OF DOCUMENT - This document was prepared for use within Westinghouse Hanford Company and is to be used only to perform, direct, or integrate work under U.S. Department of Energy contracts. Distribution external to WHC requires the appropriate document clearance.

PATENT STATUS - This document copy, since it is transmitted in advance of patent clearance, is made available in confidence solely for use in performance of work under contracts with the U.S. Department of Energy. This document is not to be published nor its contents otherwise disseminated or used for purposes other than specified above before patent approval for such release or use has been secured, upon request, from the U.S. Department of Energy, Patent Attorney, Richland Operations Office, Richland, WA.

9. ENGINEERING RELEASE STAMP
(Does not authorize public dissemination)

OFFICIAL RELEASE BY WHC 48
DATE SEP 11 1989
Station #4

10. Impact Level

2

A-6400-073 (6/89)

WHC-SD-WM-TI-390

TECHNICAL JUSTIFICATION FOR THE 216-S-26 CRIB OPERATING SPECIFICATION INCREASE

Issued by
WESTINGHOUSE HANFORD COMPANY

Prepared By: David B. Erb — 8/1/89
D.B. Erb, Cog Engr.
T.F. Support Process Engrng.
Date

WHC Approvals: Joel A. Eacker — 8/2/89
J.A. Eacker, Mgr, TFSPE
Date

Joe L Walker — 8/25/89
Nuclear Facility Safety
Date

E V dos Ramos — 8-2-89
Defense Waste Management
Quality Engineering
Date

T D Blankenship — 8/31/89
Tank Farms Operations
Date

S. M. McKinney — 8/2/89
Environmental Protection
Date

Steve Berg — 8/3/89
222-S Laboratory
Date

Introduction

This Supporting Document presents data to justify raising the 216-S-26 crib's Operating Specification Document (OSD) level from 23.5 inches to 36 inches which will utilize 100% of the crib's capacity. This report is modified from Reference 2, which was prepared at the request of Nuclear Facility Safety as an informal safety analysis report. It compiles available radiological and hazardous waste data, results from recent surface and subsurface radiological surveys at the crib, and evaluations from two available crib Safety Analysis Reports (SAR) for generic site characteristics of the natural setting.

The 216-S-26 crib exceeded the 23.5-inch OSD limit four times in the 15 months prior to October, 1988. The crib was temporarily shut down from mid-September to mid-December, 1988, to investigate its percolation problems while the 222-S Laboratory effluent was pumped to the 216-S-10 ditch. Work conducted on the crib during this shut-down period included the following:

- Remote video inspection of the 450 ft. crib distribution pipe.
  - All pipe sections were found intact.
  - Sand, gravel, sample bottles, styrofoam and other debris were observed in pipe.
- High-pressure flush and brush reaming of crib pipe.
  - Removed debris from pipe.
- Drilling of test borings to characterize soil beneath crib.
  - Alternating layers of silt and fine sand exist to 55 ft beneath crib.
- Assessment of nearby groundwater well's construction data and archived soil samples.
  - Mostly silt and fine sand layers to 100 ft. depth.

The results from the above indicates that: (1) the crib design was undersized for continuous long term operations, (2) the geology (Fig.1) at the crib site is poorly suited for effective soil column disposal and, (3) the crib can not routinely accept the standard volumes discharged from 207-SL without exceeding the 23.5-inch OSD limit.

Based on field studies, four options for crib remediation were presented (Ref. 4), which included:

- Enlarging the crib area by 50%.
- Constructing cased wells to intercept more permeable soil layers at depth.
- Constructing uncased wells backfilled with gravel to more permeable layers at depth.
- Increasing the OSD limit for the crib.

Several of these options were rejected (ref 3).. Drilling cased wells to more permeable layers was considered to be too much like injection wells which are not permitted by Washington State law. Drilling uncased wells was somewhat more acceptable but the expected life of such holes was expected to be so short, due to silting, as to provide no long term relief. Therefore, neither suggestion has been considered further.

Expanding the crib area by 50% is an option being seriously considered although much of the regulatory opinion does not favor it (Ref. 3). Draft U.S. Department of Energy (DOE) Order 5400.3 (Ref. 5) prohibits the discharge of new or increased levels of radionuclides in the liquid waste to an active or virgin soil column after the effective date of the Order unless the discharge is discussed in the Site Interim Control Strategy. It's inclusion must be approved by DOE-Headquarters Program Office and the Assistant Secretary for Environment, Safety, and Health.

The 216-S-10 ditch has been recommended as an alternative discharge point for the 207-SL effluent. The S-10 ditch is a Part A permitted site under the Resource Conservation and Recovery Act (RCRA) and permit changes would be necessary to implement this connection. Future changes to the effluent volumes discharged from the 207-SL basin could increase the concentration of radionuclides and hazardous wastes to limits above those currently acceptable for

216-S-26 CRIB

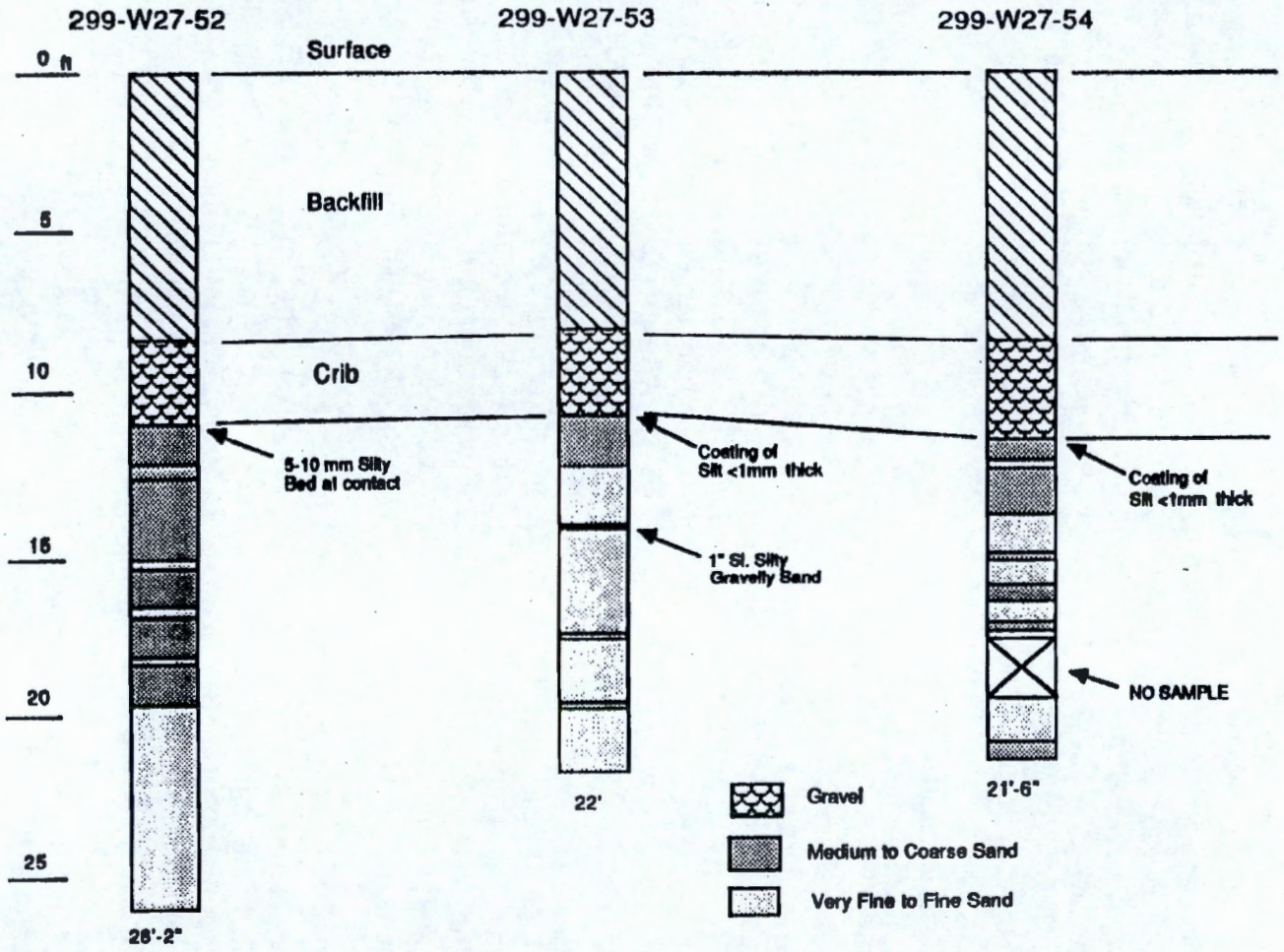

Figure 1

surface water discharge. Disposal to 216-S-10 ditch is not being seriously considered as the Washington State Department of Ecology (WDOE) is attempting to halt all liquid effluent discharge to the soil column from RCRA Part A permitted streams on the Hanford Reservation.

Raising the OSD limit provides an interim and possibly long-term solution to the crib percolation problem. Raising the OSD limit will increase the hydraulic head on the effluent entering the crib. The 222-S Laboratory's effluent consumption is expected to be reduced when new vacuum pumps and a new air conditioning system are installed in the 222-S Facility. These modifications will reduce effluent volume by about 50% but will increase radionuclide and chemical waste consentrations.

Crib Design Data

The 216-S-26 crib (see fig 2) is located south of the 222-S Laboratory building and outside the 200-W area fence. The crib was constructed in 1984 and began operation in October of that year. The facility has bottom dimensions of 10 feet by 420 feet. The crib consists of a 2.5 foot thick layer of 1.5"-3.0" sized gravel overlain by a plastic vapor barrier. The vapor barrier extends 12" up the side of the excavation to an elevation 36.6" higher than the floor of the crib at any cross section. A 6" perforated vitrified clay distribution pipe runs down the center of the crib and is positioned 18" above the floor of the crib. The crib and pipeline slope at a 0.6% grade to the east, dropping approximately 30" in elevation along the crib's length. The crib is at least 10 feet deep with approximately 7.5 feet of backfill above the plastic vapor barrier. Side slopes on the crib are constructed to a 1.5:1 (H:V) ratio, giving a total surface excavation

The 216-S-26 crib receives effluent from three sources (Refs 12 and 19): the 222-S laboratory and 219-S buildings, the 222-SA building, and the 291-S-16 stack. Approximately 3-6 gallons per minute (4320 gpd in winter-8640 gpd maximum in summer) of steam condensate and steam turbine exhaust fan-bearings cooling water flows from the 291-S stack fan house and enters the sewer line at the 207-SL discharge box. Approximately, 30-40 gallons per day of effluent enters the sewer line from the 222-SA building and consists of non-radioactive, non-hazardous effluents from selected lab sinks, fume hoods, and glass washers. This building is a "cold"

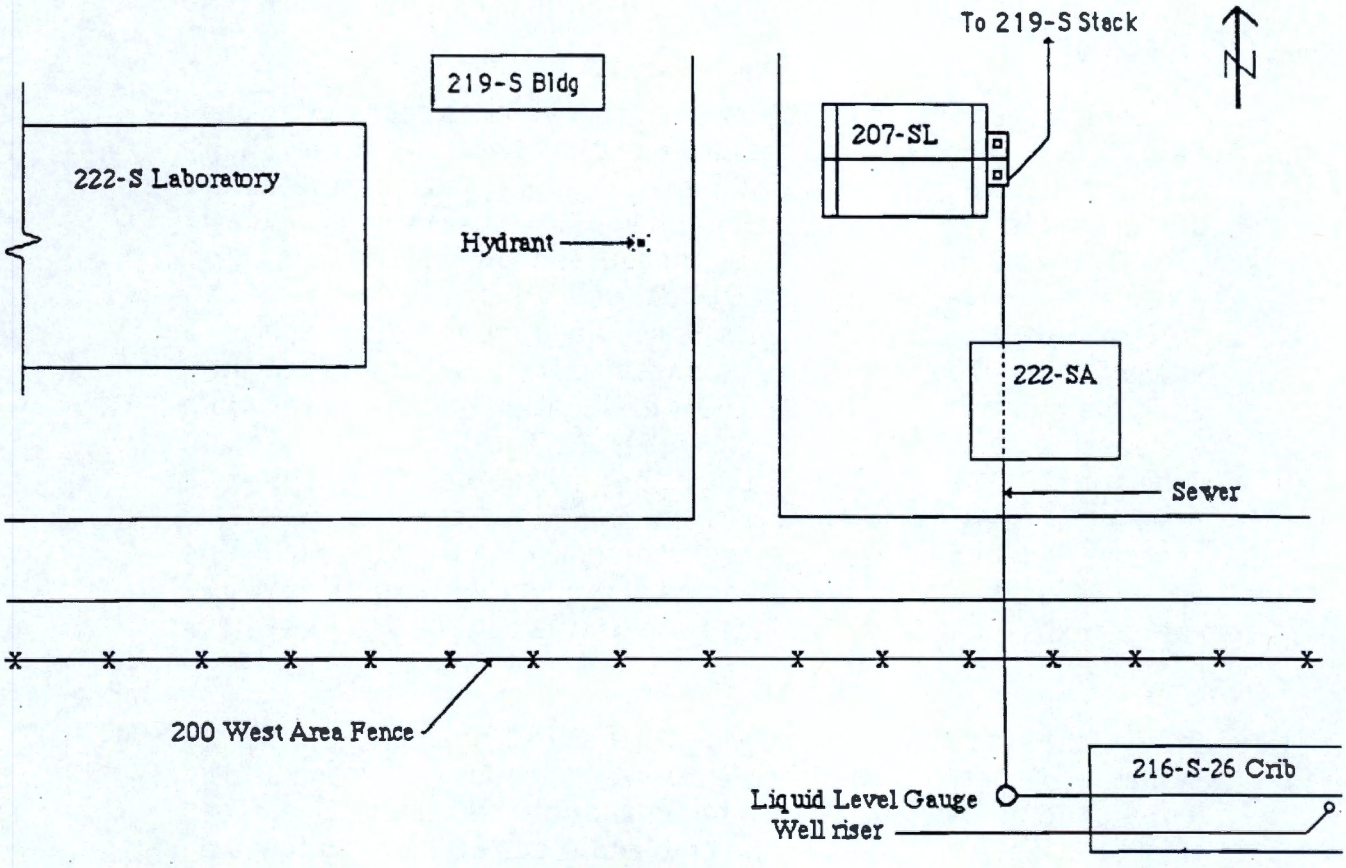

Figure 2 Location Map

standards lab and contains no radioactive waste. Hazardous material is present in the building but is controlled by procedural and strict material balance methods used in preparing laboratory standards.

Effluent discharged from the 222-S Laboratory is received in one of two 25,000 gallon holding basins comprising the 207-SL facility. Effluent discharged during each shift at 222-S is accumulated in one of the basins. A flow proportional sampler, located just upstream of the 207-SL basin, automatically measures flow and draws samples. A representative sample is gathered for analysis at the end of each shift and approximately 3 hours is required for sample evaporation and counting. The effluent is released to the S-26 crib if the sample analysis meets limits for pH (2.0 < effluent pH < 12.5), Total Alpha (release value based on WHC-CM-7-5), and Total Beta (release value based on WHC-CM-7-5). If outside the limits, the effluent is sent to the 244-S Tank Farms via the 219-S facility. Hazardous waste content is also a release factor for discharging the 207-SL basins. Spills to the basin are reported and appropriate steps taken before release. Effluent from the 222-SA building and the 291-S stack are not sampled.

A 500 ft. long segment of the old S-19 sewer line connects the 207-SL basins to the crib at Manhole #3. A series of valves and slide gates control flow out of each basin and into the sewer line. The manhole lies 30 ft. west of the crib and feeds effluent to it via a 6" unperforated pipe. A gauge well riser, located 130 ft. east of the manhole, is adjacent to the distribution line and measures liquid levels in the crib. A vent riser is located at the east end of the crib.

It has been observed that batch discharges to the crib have produced a peak liquid level at the gauge well that then subsides. For recent 10,000 gallon batch discharges, the peak level occurs about 4 hours after the start of the release. This is due in part to the effluent flow control at the basin and characteristics of the crib. Also, most effluent exits the crib distribution line before reaching the east end of the crib and probably before reaching the gauge well.

The major source of effluents to the S-26 crib comes from discharges by the 222-S laboratory and the 219-S facility. The 222-S effluent consists of HVAC condensate, vacuum pump coolant,

steam line condensate, generator condensate, distilled water storage excess, and designated lab sink and hood drains in the Analytical section of the building. Waste sources from the 219-S facility include overflow and drain lines from TK-201 caustic tank, operating gallery sump #8, and steam condensate from the operating gallery. The caustic line has been rerouted so as to not empty into the basins.

During it's operational history, the 207-SL basin and S-26 crib have been used for disposing of neutralizing caustic solutions. At least 4 tanker truck flushes of caustic Sodium Hydroxide (NaOH) solution, each of about 1,100 gallons, were neutralized in the tanker, retested for pH and discharged to the 207-SL. This practice was halted (Ref. 16) shortly after it was recognized that high pH discharges could reduce soil infiltration rates due to sodium ions deflocculating the clay and silt fraction of the soil. These discharges were neutralized to fall within the release pH range and did not constitute a hazardous waste.

Crib Performance and Historical Data

Data taken over the past four years indicate that the crib has exhibited signs of decreasing percolation with time. Peak quarterly values, given in Table 1 and plotted in Figure 3, from weekly readings (Fig. 3) for each month show a steadily increasing liquid level in the crib. The first OSD violation occured on October 14, 1987 when a liquid level of 34" was measured. This followed closly on the prohibition of disposing of neutralized caustic tanker flushes instituted on October 1, 1987. Tests were run on flow control valves at the basin to determine what valve settings could be used to moderate flow to the crib. Prior to this, releases were allowed

Increasing liquid levels in the crib during the first half of FY 1988 prompted the 222-S Laboratory to design an orifice plate to regulate flow to the crib at a constant volume. The plate was installed in late June, 1988. The OSD limit was next exceeded on July 20, 1988 when a liquid limit of 24" was measured. Another OSD violation occurred on September 1, 1988 when the liquid limit reached 29.5". The level was again exceeded on Sept. 12, 1988 when the liquid limit reached 27.5".

Table 1 - 216-S-26 Maximum Monthly Liquid Limit Values

Month/Year	Liquid Limits (in)	Quarterly High Liquid Level
Oct, 1984	0	
Nov, 1984	0	
Dec, 1984	0	0
Jan, 1985	0	
Feb, 1985	0	
Mar, 1985	6.75	6.75
Apr, 1985	0	
May, 1985	0	
June, 1985	1	1
July, 1985	0.5	
Aug, 1985	0	
Sep, 1985	1.5	1.5
Oct, 1985	0	
Nov, 1985	1.5	
Dec, 1985	4.5	4.5
Jan, 1986	5.5	
Feb, 1986	10	
Mar, 1986	10.25	10.25
Apr, 1986	10.75	
May, 1986	16.25	
June, 1986	11.75	16.25
July, 1986	8	
Aug, 1986	13	
Sep, 1986	16.5	16.5
Oct, 1986	14	
Nov, 1986	14	
Dec, 1986	14	14
Jan, 1987	14.5	
Feb, 1987	15.5	
Mar, 1987	17	17
Apr, 1987	15	
May, 1987	16.75	
June, 1987	14.5	16.75
July, 1987	10.5	
Aug, 1987	12	
Sep, 1987	16.5	16.5
Oct, 1987	34	
Nov, 1987	15	
Dec, 1987	16.5	34
Jan, 1988	15.5	
Feb, 1988	20	
Mar, 1988	16	20
Apr, 1988	16	
May, 1988	22	
June, 1988	23	23
July, 1988	19	
Aug, 1988	18	
Sep, 1988	27.5	27.5

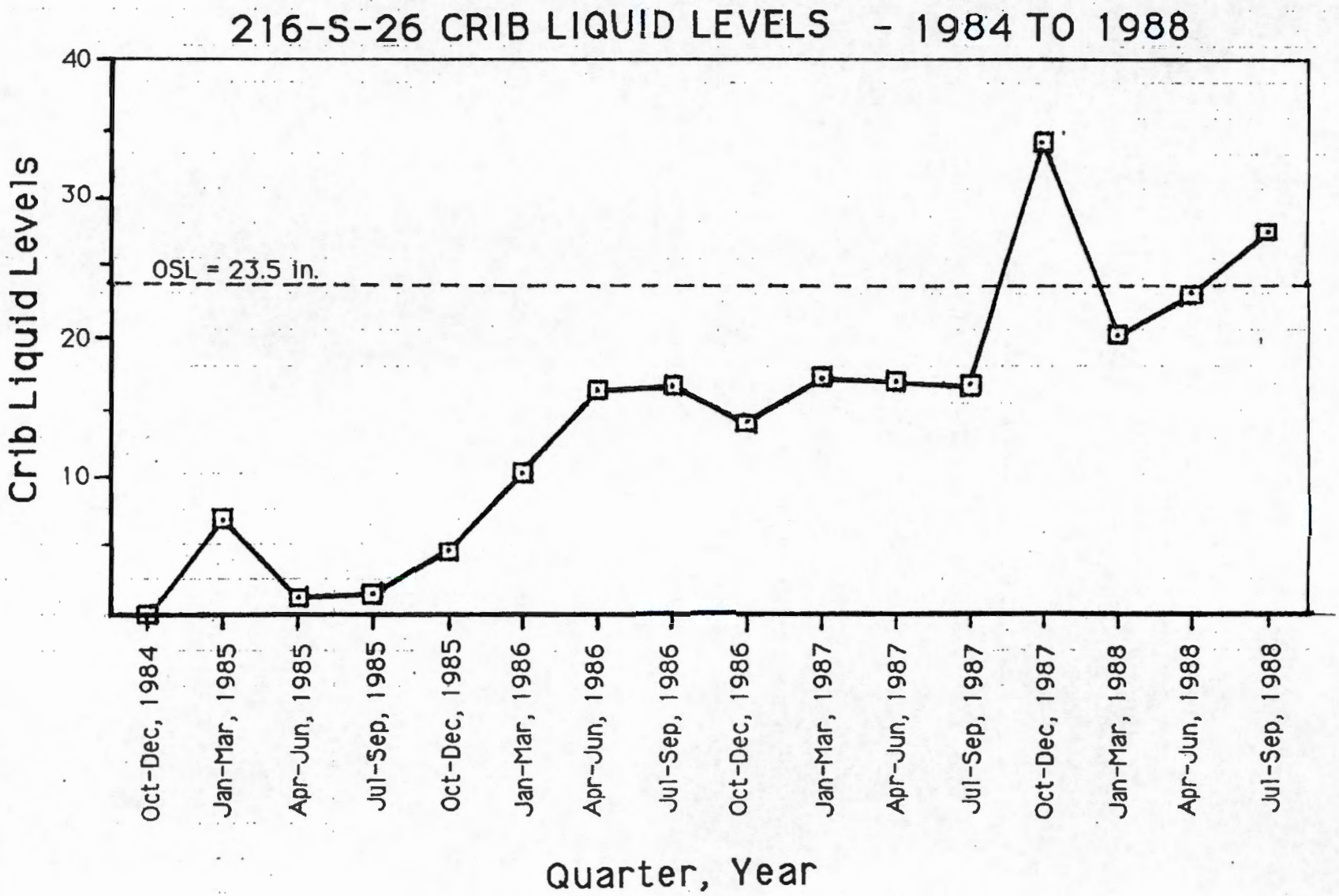
216-S-26 CRIB LIQUID LEVELS - 1984 TO 1988
Crib Liquid Levels
40
30
20
10
OSL = 23.5 in.
Oct-Dec, 1984
Jan-Mar, 1985
Apr-Jun, 1985
Jul-Sep, 1985
Oct-Dec, 1985
Jan-Mar, 1986
Apr-Jun, 1986
Jul-Sep, 1986
Oct-Dec, 1986
Jan-Mar, 1987
Apr-Jun, 1987
Jul-Sep, 1987
Oct-Dec, 1987
Jan-Mar, 1988
Apr-Jun, 1988
Jul-Sep, 1988
Quarter, Year

A Critique (Ref. 6) was prepared which shut down the crib on September 15, 1988 and required a number of actions, evaluations and studies to assure continued crib operation. Flow was diverted to the 216-S-10 ditch after notification of the DOE and WDOE. The crib was restarted on December 16, 1988; but on January 29, 1989, the OSD limit was again exceeded when the liquid level reached 23.5" On February 5, 1989 the liquid limit reached 24" and flow was again diverted to 216-S-10 ditch.

Effluent Data-Radionuclide Contamination

Data from annual reports published by Environmental Protection has been excerpted from the 1984-1988 documents and is included as Appendix A. The 1984 and 1987 samples were tested for Total Alpha, Total Beta, Sr-90, and Cs-137 while 1985 and 1986 samples were tested only for Total Alpha and Total Beta. Samples taken in 1988 were tested for the 1987 analytes plus Pu-239 and Am-241. Results are summarized in Table 2 below.

Table 2 - Summary of Radioactivity Levels found in 207-SL basin.

YEAR	1984 (Ref 20)	1985 (Ref 18)	1986 (Ref 15)	1987 (Ref 9)	1988* (Ref 1)
Total Crib Discharge (liters)	1.2xE9	4.5xE7	4.1xE7	3.4xE7	1.9xE7
Total Alpha Avg. Concen. (µCi/ml.)	1.0xE-8	4.xE-9	6.7xE-9	<2.5xE-9	3.6xE-9
Total Beta Avg. Concen. (µCi/ml.)	3.9xE-7	1.7xE-8	<1.6xE-8	<1.5xE-8	<6.7xE-9
Sr-90 Avg. Concen. (µCi/ml.)	1.3xE-7			<8.9xE-9	<1.1xE-8
Cs-137 Avg. Concen. (µCi/ml.)	<4.0xE-8			<3.3xE-8	<4.8xE-8

*1988. (Pu-239=<5.0xE-9 µCi/ml, Am-241=2.4xE-8 µCi/ml.)

The values for Sr-90 and Cs-137 have always been less than release limits established by RHO-MA-139 (Ref 13) or WHC-CM-7-5 (Ref 7). It should be noted that many of the values are frequently below present laboratory detection limits.

Hazardous Waste Contamination

Monthly chemical analyses of the 222-S effluent taken from Environmemtal Protection's annual reports on the non-radioactive parameters (Refs 8, 14, 17, 21) of liquid effluent discharged to the ground are attached in Appendix B. The analyses focused on EP Toxic substances (such as silver, mercury, chromium, cadmium), nitrates, total organic carbons, and pH as indicators of general effluent quality. Values for all elements, compounds, and indicators are

More recently, chemical analyses of 25 waste streams at Hanford were conducted by F.M. Jungfleisch (Ref. 11). These analyses were conducted for a number of compounds classified by WAC-173-303 as Toxic Substances, Positive Carcinogens, Persistent Substances,

Reactive Substances, or EP Toxic Substances. Results of these analyses are presented in Appendix C. The results of this data indicate that compounds in the 222-S effluent stream are below established levels as set forth by EPA and WAC.

Crib Contamination Data

There has been no indication of detectable levels of radioactive contamination in the 216-S-26 crib. Evidence is limited to regular surface contamination monitoring at the crib and results of one sample taken from an open pit excavated during crib cleanout efforts in October, 1988. At that time, a hole was dug into the crib to provide access to the east end of the distribution pipe for cleanout. Water washed into the crib during cleanout was sampled by Environmental Protection and showed low levels of radionuclides present. Total Alpha for the sample was <7.38xE-6 µCi/ml while Total Beta was reported at <2.26xE-6 µCi/ml (see Appendix D). This data suggests there is no or very low levels of radionuclide buildup after 4 years of crib service. Radiological Protection Technicians reported no detectable levels of contamination in the excavation. Regular inspection of the crib's surface has shown no contamination of the crib's surface since its construction. Quarterly examinations by Environmental Protection personnel have not found surface

contamination exceeding either the 200 count per minute value used as background prior to WHC-CM-7-5 or to the background levels now specified. A copy of the most recent survey is in Appendix E and other surveys are available in the files of Environmental Protection.

Safety Analysis Report-Generic Data for Cribs

Due to the lack of a Safety Analysis Report (SAR) for crib 216-S-26, data has been extracted from SARs for the 216-A-37-2 crib (Ref. 22) and 216-U-16 crib and 216-U-14 ditch (Ref. 23) to provide information for this section. Although the following data is specific to several facilities, it represents the entire sites natural setting and applys to the S-26 crib. These SARs indicates that there is a very low hazard for the Hanford site with respect to earthquakes, floods, tornados, freezing weather, and other conditions.

- Earthquake

The Safe Shutdown Earthquake (SSE) for the Hanford site is one which produces a 0.25 g horizontal ground acceleration with a simultaneous 0.17 g vertical acceleration. The Hanford site has low seismic activity and no seismic events have been recorded which approach the SSE level. Probability of occurance of an SSE is given as 7.0 x E-4/yr.

- Flood

The elevation of cribs on the 200 Areas plateau, at ~650 ft., makes structures such as cribs immune to flooding by the Probable Maximum Flood (PMF). The PMF is a combination of the most severe climatic conditions and predicts a maximum flood stage of about 492 ft. MSL. The S-26 crib elevation at approximately 662 ft places it roughly 170 ft above this stage.

- Tornado

Tornados are rare at Hanford and are short-lived when they do occur. The probability of a tornado striking a structure on the site is given as 1.0 x E-6/yr.

- Climate

The Hanford climate is relatively mild without severe winter or summer weather conditions. Annual precipitation is about 6.25 inches/year. Freezing of pipes could produce a blockage that would obstruct the flow of effluent. Maximum winter frost depth in the soil averages 20 inches with a maximum of 36 inches reported over 31 years of observation. However, since the S-26 crib and S-19 sewer pipelines are buried to a depth of 10 feet, there is little likelihood of pipe freezing.

- Surface Fire

The crib surface contains vey little vegetation other than some shallow rooted grasses. The adjacent vegetation consists of Russian Thistle (tumbleweeds), Rabbitbrush, and grasses. Fires have occurred across the reservation and can exceed the Hanford Fire Department's ability to contain them. For a small fire, response time is estimated at 5 minutes. A fire burning out of control across the area would do little damage to the crib surface. A fire might damage the risers but would pose little other hazard due to the depth of the crib and the low activity of material in the crib.

- Subsidence

Subsidence at the crib is expected to be minimal (<2 inches), resulting only from limited settlement of the materials used in crib construction. Further, the amount of settling would decrease with depth below the surface. The crib is designed to continue operating with several inches of settlement without pipe breakage.

These reports indicate that the low level of contamination coupled with low levels of hazards due to conditions of the natural setting posed no significant hazard to crib operations.

Effects of Raising the Operational Specification Limit

Operational Specification Document limits were established for cribs (Ref 10) so that either: (1) the crib would fill up to no more than 75% of its storage capacity, or (2) effluent would not back up into pipes or manholes outside the crib limits. The 216-S-26 crib's OSD limit was set at 23.5" representing 75% of the crib's total

capacity. As shown in Figure 3 this effluent level also yields a liquid elevation of 664.38 ft. This value is 1.7" less than the distribution pipe's invert elevation of 664.52 ft at the west end of the crib.

As currently established, the 17.0" Operating Limit permits effluent to reach an elevation of 663.8 ft in the crib and the 23.5" OSD level permits water to reach an elevation of 664.38 ft. The elevation of the pipe invert at the west end of the crib is 664.52 ft and is 664.7 ft at the manhole (see Fig. 4). Raising the OSD level to 36" would raise the maximum depth of water to 665.4 ft. which would permit water to stand about 9 inches deep in the manhole and would back effluent approximately 240 ft. up into the pipeline between Manhole #3 and the 207-SL basin. There is no chance for the effluent to back up into a building unless the liquid level reaches a level of 93". Note that the 36" OSD liquid limit would utilize 100% of the crib's

Effluent backed up into pipes presents an opportunity for leakage into the soil. The construction method for this crib uses vitrified clay pipe segments which are belled at one end so that each piece of pipe slip-fits into the belled end of the next pipe segment. These connections are typically not sealed and are known to leak. Therefore, part of the effluent flowing through the S-19 sewer line to the crib is lost as a matter of course. The longer effluent stands in a segment of the line the more will be lost to the soil column. Similarly, effluent may be able to leak above the plastic vapor barrier at the edges of the crib and around where vents penetrate the barrier. Given the low levels of radioactive and hazardous waste contamination in the effluent, these conditions are not seen as a significant problem to crib operation.

Conclusions

Available data shows that the 207-SL basin effluent is very low to frequently undetectable in radioactive and hazardous waste levels and poses no significant hazards when in the soil column. Further, there is no indication of contamination on the crib surface and less than detectable contamination accumulated in the crib gravels in 4 years of operation. Laboratory procedures and techniques as well as administrative controls adequately control disposal of contaminants both to the 207-SL basins as well as to the 216-S-26 crib.

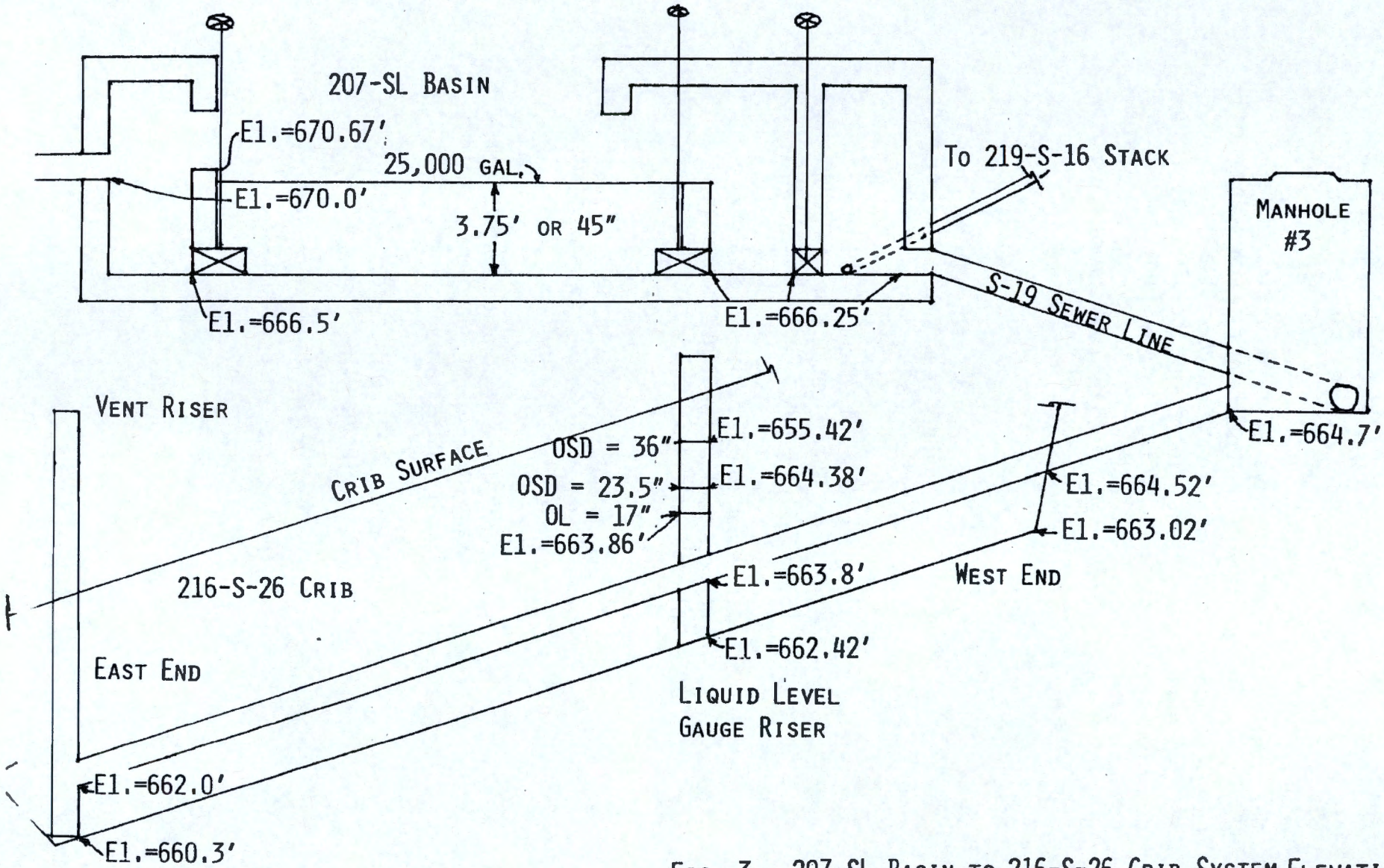

FIG. 3. 207-SL BASIN TO 216-S-26 CRIB SYSTEM ELEVATIONS

The existing OSD limit effectively served to notify that the crib was experiencing problems with the volume of effluent sent to it. Future action will be taken to reach an acceptable long term solution for disposing of the effluents. Increasing the OSD limit will not guarantee that the crib's infiltration rate will not continue to slow down. It will, however, allow the crib and 222-S Laboratory to operate in a more normal manner for the near future while an alternate long term solution is developed.

References:

1. SD-WM-TI-345, Rev 3, "Radioactive Liquid Effluent Report for Calender Year 1988", L. J. Voigt and F. M. Coony, March 30, 1989

2. D. B. Erb to D. R. Ellingson, "Crib 216-S-26 Data for Operational Specification Limits Evaluation," 13331-89-081, dated February 21, 1989.

3. R.J. Landon to G.T. Berlin, "Regulatory Impacts on the 216-S-26 Crib Remediation Alternatives", 80132-88-216, dated December 12, 1988.

4. G.T.Berlin to R.J. Landon, "Crib 216-S-26 Remediation Alternatives", 13331-88-671, dated November 15, 1988.

5. DOE Order 5400.3, "Radiation Protection of the Public and the Environment", (Draft), dated October 10, 1988.

6. WHC-C-88-132-TF-08, Critique Report for 216-S-26 Crib, September 12, 1988.

7. WHC-CM-7-5, "Environmental Compliance Manual", Regulatory Compliance, August, 1988.

8. WHC-EP-0141 UC-11, "Westinghouse Hanford Company Effluent Releases and Solid Waste Management Report for 1987, 200/600/1100 Areas", F. M. Coony, D. B. Howe, and L. J. Voigt, May, 1988.

9. RHO-HS-SR-87-3 4QLIQ, "Radioactive Liquid Waste Discharged to the Ground in the 200 Areas During Calender Year 1987", L. J. Voigt, March 30, 1988.

10. OSD-T-151-00018, "Operating Specifications for 200 Area Cribs" B.D. Theriault, January 1988.

11. WHC-EP-0052, "Preliminary Evaluation of Hanford Liquid Discharges to the Ground", F.M. Jungfleisch, February, 1988.

12. PFD-S-018-00001, "Liquid Waste System for S-Plant", M.D. Harris and E.A. McNamar, August 1987.

13. RHO-MA-139, "Environmental Compliance Manual", Radiological and Environmental Safety, Safety, and Quality Assurance, June, 1987.

14. RHO-HS-SR-86-10 4Q, "Radioactive Liquid Wastes Discharged to the Ground in the 200 Areas During 1986-Nonradiological Parameters", R. S. Shay, April, 1987.

15. RHO-HS-SR-86-3 4QLIQ P, "Radioactive Liquid Wastes Discharged to the Ground in the 200 Areas During 1986", R. C. Aldrich, March 4, 1987.

16. M.R. Adams to K.A. Gasper, "Effects of Flushwater from Caustic Tanker Truck Rinsing on Infiltration Rates in Cribs, Ponds, and Ditches", 65630-97-021, dated Feb 25, 1987.

17. RHO-HS-SR-85-10 4Q, "Liquid Waste Discharged to the Ground in the 200 Areas During 1985-Nonradiological Parameters", R. S. Shay, June, 1986.

18. RHO-HS-SR-85-3 4QLIQ P, "Radioactive Liquid Waste Discharged to the Ground in the 200 Areas During 1985", R. C. Aldrich, March 6, 1986.

19. PFD-S-600-00001, "Chemical Sewer Flowsheet for S-Plant Area", E.A. McNamar and R.K. Fuller, May, 1986.

20. RHO-HS-SR-84-3, 4QLIQ P, "Radioactive Liquid Wastes Discharged to the Ground in the 200 Areas during 1984", R. C. Aldrich, March 6, 1985.

21. RHO-HS-SR-84-10 4Q P, "Liquid Wastes Discharged to the Ground in the 200 Areas During 1984-Nonradiological Parameters", R. C. Aldrich, February 14, 1985.

22. SD-HS-SAR-018,"Hazard Identification and Evaluation for the PUREX Crib 216-A-37-2", A.G. Pines, July 1983.

23. SD-HS-SAR-019, "Hazard Identification and Evaluation for the UO3 Crib", July 1983.

APPENDIX A

RHO-HS-SR-84-3 4QLIQ (Ref. 20) TABLE 25 PAGE 147

MONTHLY SUMMARY OF LIQUID WASTE DISCHARGED TO GROUND FROM 1/1 TO 12/31 1984 AT
DISPOSAL SITE 216-S-26 CRIB
WASTE STREAM DESCRIPTION- 222-S LAB STEAM CONDENSATE AND SINK WASTES FROM 1C/84 TO DATE.

1984	VOLUME (L)	ALPHA (CI)	BETA (CI)	PU (GM)	SR-90 (CI)	CS-137 (CI)	H-3 (CI)	AM-241 (GM)
JAN								
FEB								
MAR								
APR								
MAY								
JUN								
JUL								
AUG								
SEP								
OCT	.362+007	.760-004	.435-002		.138-002	<.145-003		
NOV	.375+007	.675-005	.101-003		<.300-004	<.150-003		
DEC	.421+007	.358-004	.800-004		.463-004	<.168-003		
ADJ								
84 SUM	.116+006	.119-003	.453-002		.145-002	<.463-003		
PRE SUM								
TOT SUM	.116+008	.119-003	.453-002		.145-002	<.463-003		
84 DECAY	.116+008	.119-003	<.440-002		.145-002	<.462-003		
PREDECAY								
TOTDECAY	.116+008	.119-003	<.440-002		.145-002	<.462-003		
MONTHLY		(UCI/ML)	(UCI/ML)	(UCI/ML)	(UCI/ML)	(UCI/ML)	(UCI/ML)	(UCI/ML)
MAXIMUM		OCT	OCT		OCT	NOV		
CONC		.210-007	.170-005		.380-006	<.400-007		
AVERAGE CONC		.102-007	.391-006		.125-006	<.400-007		

HO-HS-SR-84-3 40LIQ (Ref. 20) TABLE 25 (CONTINUED FROM PAGE 147)

MONTHLY SUMMARY OF LIQUID WASTE DISCHARGED TO GROUND FROM 1/1 TO 12/31 1984 AT
DISPOSAL SITE 216-S-26 CRIB
ASTE STREAM DESCRIPTION- 222-S LAB STEAM CONDENSATE AND SINK WASTES FROM 10/84 TO DATE.

984	U-238 (KGM)	PM-147 (CI)	RU-106 (CI)	PU-241 (CI)				
IAN								
EB								
IAR								
PR								
IAY								
IUN								
IUL								
IUG								
EP								
CT								
IOV								
EC								
IDJ								
34 SUM								
RE SUM								
TOT SUM								
34 DECAY								
REDECAY								
TOTDECAY								
MONTHLY MAXIMUM CONC	(UCI/ML)	(UCI/ML)	(UCI/ML)	(UCI/ML)	(UCI/ML)	(UCI/ML)	(UCI/ML)	(UCI/ML)
AVERAGE CONC								

RHO-HS-SR-85-3 4QLIQ (Ref. 18) TABLE 25 PAGE 147

MONTHLY SUMMARY OF LIQUID WASTE DISCHARGED TO GROUND FROM 1/1 TO 12/31 1985 AT DISPOSAL SITE 216-S-26 CRIB

WASTE STREAM DESCRIPTION- 222-S LAB STEAM CONDENSATE AND SINK WASTES FROM 10/84 TO DATE.

1985	VOLUME (L)	ALPHA (CI)	BETA (CI)	H-3 (CI)	SR-90 (CI)	RU-103 (CI)	RU-106 (CI)	SN-113 (CI)
JAN	4.36E+06	2.44E-05	4.36E-05					
FEB	4.46E+06	2.94E-05	6.25E-05					
MAR	4.45E+06	1.20E-05	3.25E-05					
APR	3.84E+06	1.08E-05	3.61E-05					
MAY	3.93E+06	< 5.50E-06	3.53E-05					
JUN	4.75E+06	< 6.18E-06	1.95E-05					
JUL	2.32E+06	2.79E-05	< 1.67E-05					
AUG	3.85E+06	5.77E-06	< 3.31E-05					
SEP	2.90E+06	2.61E-05	3.77E-04					
OCT	2.61E+06	3.13E-05	6.00E-05					
NOV	3.39E+06	9.15E-06	3.25E-05					
DEC	3.81E+06	< 7.61E-06	2.13E-05					
ADJ								
85 SUM	4.47E+07	1.96E-04	7.71E-04					
MONTHLY		(UCI/ML)	(UCI/ML)	(UCI/ML)	(UCI/ML)	(UCI/ML)	(UCI/ML)	(UCI/ML)
MAXIMUM		JUL	SEP					
CONC		1.20E-08	1.30E-07					
AVERAGE CONC		4.39E-09	1.72E-08		3.2			

WHO-HS-SR-85-3 4QLIQ (Ref. 18) TABLE 25 (CONTINUED FROM PAGE 147)

MONTHLY SUMMARY OF LIQUID WASTE DISCHARGED TO GROUND FROM 1/1 TO 12/31 1985 AT DISPOSAL SITE 216-S-26 CRIB

WASTE STREAM DESCRIPTION- 222-S LAB STEAM CONDENSATE AND SINK WASTES FROM 10/84 TO DATE.

1985	I-129 (CI)	CS-137 (CI)	PM-147 (CI)	U(GROSS) (CI)	PU-238 (CI)	PU-239 (CI)	PU-241 (CI)	AM-241 (CI)
JAN								
FEB								
MAR								
APR								
MAY								
JUN								
JUL								
AUG								
SEP								
OCT								
NOV								
DEC								
ADJ								
US SUM								
MONTHLY MAXIMUM CONC	(UCI/ML)	(UCI/ML)	(UCI/ML)	(UCI/ML)	(UCI/ML)	(UCI/ML)	(UCI/ML)	(UCI/ML)
AVERAGE CONC								

RHO-HS-SR-86-3 4QLIQ (Ref. 15) TABLE 22 PAGE 141

MONTHLY SUMMARY OF LIQUID WASTE DISCHARGED TO GROUND FROM 1/1 TO 12/31 1986 AT

DISPOSAL SITE 216-S-26 CRIB

WASTE STREAM DESCRIPTION- 222-S LAB STEAM CONDENSATE AND SINK WASTES FROM 10/84 TO DATE.

1986	VOLUME (L)	ALPHA (CI)	BETA (CI)	H-3 (CI)	SR-90 (CI)	RU-103 (CI)	RU-106 (CI)	SN-113 (CI)
JAN	3.50E+06	< 1.33E-05	3.11E-05					
FEB	3.01E+06	< 5.12E-06	2.14E-05					
MAR	3.32E+06	6.98E-06	3.12E-05					
APR	3.08E+06	1.91E-05	2.34E-05					
MAY	3.07E+06	8.81E-06	2.79E-05					
JUN	2.68E+06	1.65E-05	< 1.90E-04					
JUL	3.24E+06	9.41E-06	3.02E-05					
AUG	4.40E+06	1.01E-05	< 6.15E-05					
SEP	3.86E+06	1.35E-04	1.12E-04					
OCT	3.39E+06	2.24E-05	3.39E-05					
NOV	4.31E+06	1.03E-05	7.76E-05					
DEC	3.29E+06	1.58E-05	2.60E-05					
ADJ								
86 SUM	4.12E+07	2.74E-04	< 6.68E-04					
MONTHLY MAXIMUM CONC		(UCI/ML) SEP 3.50E-08	(UCI/ML) JUN < 7.10E-08	(UCI/ML)	(UCI/ML)	(UCI/ML)	(UCI/ML)	(UCI/ML)
AVERAGE CONC		6.66E-09	< 1.62E-08					

RHO-HS-SR-86-3 4QLIQ TABLE 22 (CONTINUED FROM PAGE 141) PAGE 142

MONTHLY SUMMARY OF LIQUID WASTE DISCHARGED TO GROUND FROM 1/1 TO 12/31 1986 AT

DISPOSAL SITE 216-S-26 CRIB

WASTE STREAM DESCRIPTION- 222-S LAB STEAM CONDENSATE AND SINK WASTES FROM 10/84 TO DATE.

1986	I-129 (CI)	CS-137 (CI)	PM-147 (CI)	U(GROSS) (CI)	PU-238 (CI)	PU-239 (CI)	PU-241 (CI)	AM-241 (CI)
JAN								
FEB								
MAR								
APR								
MAY								
JUN								
JUL								
AUG								
SEP								
OCT								
NOV								
DEC								
ADJ								
86 SUM								
MONTHLY MAXIMUM CONC	(UCI/ML)	(UCI/ML)	(UCI/ML)	(UCI/ML)	(UCI/ML)	(UCI/ML)	(UCI/ML)	(UCI/ML)
AVERAGE CONC								

RHO-HS-SR-87-3 4QLIQ (Ref. 9) TABLE 21 PAGE 141

MONTHLY SUMMARY OF LIQUID WASTE DISCHARGED TO GROUND FROM 1/1 TO 12/31 1987 AT

DISPOSAL SITE 216-S-26 CRIB

WASTE STREAM DESCRIPTION- 222-S LAB STEAM CONDENSATE AND SINK WASTES FROM 10/84 TO DATE.

1987	VOLUME (L)	ALPHA (CI)	BETA (CI)	H-3 (CI)	SR-90 (CI)	RU-103 (CI)	RU-106 (CI)	SN-113 (CI)
JAN	3.10E+06	1.15E-05	2.11E-05					
FEB	2.66E+06	3.99E-06	1.70E-05					
MAR	2.87E+06	6.81E-06	2.13E-05					
APR	2.59E+06	1.29E-05	1.27E-05		< 2.59E-05			
MAY	2.94E+06	5.29E-06	2.50E-05		< 2.94E-05			
JUN	3.16E+06	3.79E-06	1.52E-05		< 2.53E-05			
JUL	3.80E+06	< 1.72E-05	1.58E-05		< 2.72E-05			
AUG	2.98E+06	3.93E-06	< 1.20E-04		< 1.35E-05			
SEP	1.91E+06	1.97E-06	8.12E-06		< 1.63E-05			
OCT	2.88E+06	< 9.87E-06	1.20E-05		< 4.34E-05			
NOV	2.59E+06	< 6.79E-06	2.25E-04		< 1.54E-05			
DEC	2.88E+06	< 3.34E-06	< 2.87E-05		< 5.13E-05			
ADJ								
87 SUM	3.44E+07	< 8.72E-05	< 5.23E-04		< 3.05E-04			
MONTHLY MAXIMUM CONC		(UCI/ML) APR 5.00E-09	(UCI/ML) NOV 8.88E-08	(UCI/ML)	(UCI/ML) DEC < 1.78E-08	(UCI/ML)	(UCI/ML)	(UCI/ML)
AVERAGE CONC		< 2.54E-09	< 1.52E-08		< 8.88E-09			

RHO-HS-SR-87-3 4QLIQ TABLE 21 (CONTINUED FROM PAGE 141) PAGE 142

MONTHLY SUMMARY OF LIQUID WASTE DISCHARGED TO GROUND FROM 1/1 TO 12/31 1987 AT

DISPOSAL SITE 216-S-26 CRIB

WASTE STREAM DESCRIPTION- 222-S LAB STEAM CONDENSATE AND SINK WASTES FROM 10/84 TO DATE.

1987	I-129 (CI)	CS-137 (CI)	PM-147 (CI)	U(GROSS) (CI)	PU-238 (CI)	PU-239 (CI)	PU-241 (CI)	AM-241 (CI)
JAN								
FEB								
MAR								
APR		< 1.03E-04						
MAY		< 1.18E-04						
JUN		< 1.26E-04						
JUL		< 1.57E-04						
AUG		< 1.26E-04						
SEP		< 7.98E-05						
OCT		< 1.25E-04						
NOV		< 1.06E-04						
DEC		< 1.27E-04						
ADJ								
87 SUM		< 1.13E-03						
MONTHLY MAXIMUM CONC	(UCI/ML)	(UCI/ML) DEC < 4.39E-08	(UCI/ML)	(UCI/ML)	(UCI/ML)	(UCI/ML)	(UCI/ML)	(UCI/ML)
AVERAGE CONC		< 3.28E-08						

TABLE 22

MONTHLY SUMMARY OF LIQUID WASTE DISCHARGED TO GROUND FROM 1/1 TO 09/30 1988 AT

DISPOSAL SITE 216-S-26 CRIB

WASTE STREAM DESCRIPTION- 222-S LAB STEAM CONDENSATE AND SINK WASTES FROM 10/84 TO DATE.

1988	VOLUME (L)	ALPHA (CI)	BETA (CI)	H-3 (CI)	SR-90 (CI)	RU-103 (CI)	RU-106 (CI)	SN-113 (CI)
JAN	2.86E+06	6.78E-06	1.78E-05		< 3.23E-05			
FEB	2.60E+06	2.44E-05	2.13E-05		< 4.88E-05			
MAR	2.54E+06	7.93E-06	7.91E-06		< 2.30E-05			
APR	1.84E+06	5.31E-06	1.12E-05		< 2.10E-05			
MAY	2.10E+06	3.43E-06	< 1.99E-05		< 1.62E-05			
JUN	1.84E+06	3.64E-06	9.15E-06		< 1.57E-05			
JUL	1.99E+06	9.42E-06	< 2.61E-05		< 2.03E-05			
AUG	1.98E+06	5.86E-06	8.95E-06		< 1.95E-05			
SEP	1.15E+06	1.13E-06	4.29E-06		< 8.23E-06			
OCT								
NOV								
DEC								
ADJ								
88 SUM	1.89E+07	6.79E-05	< 1.27E-04		< 2.05E-04			
MONTHLY MAXIMUM CONC		(UCI/ML) FEB 9.41E-09	(UCI/ML) JUL < 1.31E-06	(UCI/ML)	(UCI/ML) FEB < 1.88E-08	(UCI/ML)	(UCI/ML)	(UCI/ML)
AVERAGE CONC		3.59E-09	< 6.70E-08		< 1.06E-08			

TABLE 22 (CONTINUED FROM PAGE 143)

MONTHLY SUMMARY OF LIQUID WASTE DISCHARGED TO GROUND FROM 1/1 TO 09/30 1988 AT

DISPOSAL SITE 216-S-26 CRIB

WASTE STREAM DESCRIPTION- 222-S LAB STEAM CONDENSATE AND SINK WASTES FROM 10/84 TO DATE.

1988	I-129 (CI)	CS-137 (CI)	PM-147 (CI)	U(GROSS) (CI)	PU-238 (CI)	PU-239 (CI)	PU-241 (CI)	AM-241 (CI)
JAN		< 1.27E-04				< 1.43E-05		< 5.72E-05
FEB		< 1.12E-04				< 1.30E-05		< 5.20E-05
MAR		< 1.16E-04				< 1.27E-05		
APR		< 7.81E-05				< 9.19E-06		1.16E-04
MAY		< 8.60E-05				< 1.05E-05		< 4.20E-05
JUN		< 9.13E-05				< 9.18E-06		< 3.68E-05
JUL		1.01E-04				< 9.97E-06		< 3.99E-05
AUG		< 1.44E-04				< 9.90E-06		< 3.96E-05
SEP		< 5.46E-05				< 5.75E-06		< 6.40E-05
OCT								
NOV								
DEC								
ADJ								
88 SUM		< 9.10E-04				< 8.45E-05		< 4.58E-04
MONTHLY MAXIMUM CONC	(UCI/ML)	(UCI/ML) AUG < 7.29E-08	(UCI/ML)	(UCI/ML)	(UCI/ML)	(UCI/ML) JAN < 5.00E-09	(UCI/ML)	(UCI/ML) APR 6.32E-08
AVERAGE CONC		< 4.81E-08				< 5.00E-09		< 2.41E-08

APPENDIX B

TABLE 5: MONTHLY COMPOSITE OF 222-S BUILDING COOLING WATER (207-SL) EFFLUENT-NONRADIOLOGICAL ASPECTS
RHO-HS-SR-84-10 40 P (Ref. 21)

STANDARDS/FOR COMPARISON	PH	SILVER MG/L	CADMIUM MG/L	CHROMIUM MG/L	LEAD MG/L	NITRATE MG/L AS NO3	AMMONIA MG/L	MERCURY MG/L	CONDUCTIVITY MICROMHOS/CM	TOTAL ORGANIC CARBON MG/L
DANGEROUS WASTE REGULATIONS (WAC 173-303-090)	2-12.5	5.00	1.00	5.00	5.00	---	---	0.20	---	---
BEST PRACTICAL TECHNOLOGY LIMITATION (30 DAY AVERAGE)	---	---	0.05 - 0.50	0.05 - 0.50	0.10 - 2.10	---	---	---	---	---
MONTH										
JANUARY	7.2	< 0.11	< 0.22	< 0.16	< 0.99	3.2	0.10	< 0.01	120	< 2.0
FEBRUARY	6.2	< 0.11	< 0.22	< 0.16	< 0.99	5.0	< 0.03	< 0.01	126	13.0
MARCH	9.1	< 0.11	< 0.11	< 0.10	< 0.83	1.8	< 0.03	< 0.01	180	6.0
APRIL	8.1	< 0.32	< 0.11	< 0.10	< 0.83	2.4	< 0.03	< 0.01	139	19.0
MAY	7.3	< 0.22	< 0.22	< 0.03	< 0.83	2.8	< 0.03	< 0.01	159	11.0
JUNE	7.6	< 0.22	< 0.22	< 0.03	< 0.83	1.9	< 0.03	< 0.05	140	17.0
JULY	8.3	< 0.22	< 0.22	< 0.03	< 0.83	1.9	< 0.03	< 0.05	115	18.0
AUGUST	7.0	< 0.22	< 0.10	< 0.10	< 0.62	4.6	< 0.03	< 0.01	150	10.3
SEPTEMBER	8.0	< 0.22	< 0.10	< 0.10	< 0.62	2.4	< 0.03	< 0.01	160	6.0
OCTOBER	8.2	< 0.22	< 0.10	< 0.10	< 0.62	2.1	< 0.03	< 0.01	128	10.0
NOVEMBER	8.0	< 0.22	< 0.10	< 0.10	< 0.62	1.9	< 0.03	< 0.01	130	14.0
DECEMBER	7.5	< 0.22	< 0.10	< 0.10	< 0.62	2.3	< 0.03	< 0.01	120	< 2.0

Table 26. 222-S Cooling Water (207-SL) 1985 Nonradiological Liquid Effluent Data.

Month	Volume (L)	pH	Nitrate[a] (mg/L)	Total organic[b] (mg/L)	ICP[c] emission analysis
January	4.36 E+06	7.7	NA[d]	<2	NA
February	4.46 E+06	3.7	NA	2	NA
March	4.45 E+06	8.0	NA	1	NA
April	3.84 E+06	8.0	NA	1	NA
May	3.93 E+06	9.5	NA	<2	NA
June	4.75 E+06	e	NA	<2	NA
July	3.32 E+06	7.7	NA	6	NA
August	3.85 E+06	7.9	NA	<2	NA
September	2.90 E+06	7.6	NA	<2	NA
October	2.61 E+06	7.4	NA	<2	NA
November	3.39 E+06	8.0	NA	<2	NA
December	3.81 E+06	7.6	NA	2	NA
Guideline[f]		2-12.5			
		Discharge range			
Minimum	2.32 E+06	3.7		1	
Maximum	4.75 E+06	9.5		6	
		Annual discharge			
	4.47 E+07			<94 kg	

[a]Reported as NO_3.
[b]Reported as carbon.
[c]Inductively coupled plasma.
[d]NA-not applicable.
[e]Missing analytical data.
[f]WAC 173-303-090 guideline for comparison only.

TABLE 4-6

200 AREA SEPARATION FACILITIES
1986 NONRADIOLOGICAL LIQUID EFFLUENT DATA

222-S Cooling Water (207-SL)

MONTH	Volume Liters	pH	Nitrate (NO3) Conc. mg/L	Nitrate (NO3) Discharge kg	Total Organic Carbon (C) Conc. mg/L	Total Organic Carbon (C) Discharge kg
January	3.50E+06	7.8	< 2	9	< 2	7
February	3.01E+06	9.6	3	9	3	9
March	3.32E+06	7.7	< 2	8	11	37
April	3.09E+06	No Data	No Data	No Data	17	52
May	3.07E+06	8.5	No Data	No Data	36	110
June	2.68E+06	8.5	< 1	3	18	48
July	3.24E+06	7.2	< 1	4	< 2	6
August	4.40E+06	8.8	1	5	3	11
September	3.86E+06	No Data	No Data	No Data	1	5
October	3.39E+06	No Data	No Data	No Data	14	47
November	4.31E+06	8.9	< 1	5	25	108
December	3.29E+06	7.7	2	6	< 2	7
1985 Discharge		3.7-9.5			<2 mg/L	
GUIDE		2.0-12.5	45 mg/L		55 mg/L	
1986 Discharge		7.2-9.6	< 1 mg/L Nitrate		< 11 mg/L Organic Carbon	
TOTAL	4.12E+07		< 49 kg			< 448 kg

OBSERVATION
Operated within guidelines.
April, September and October samples acidified prior to analysis and no process data available.

na - Analysis not requested
No Data - Analysis not reported

(Ref. 14)

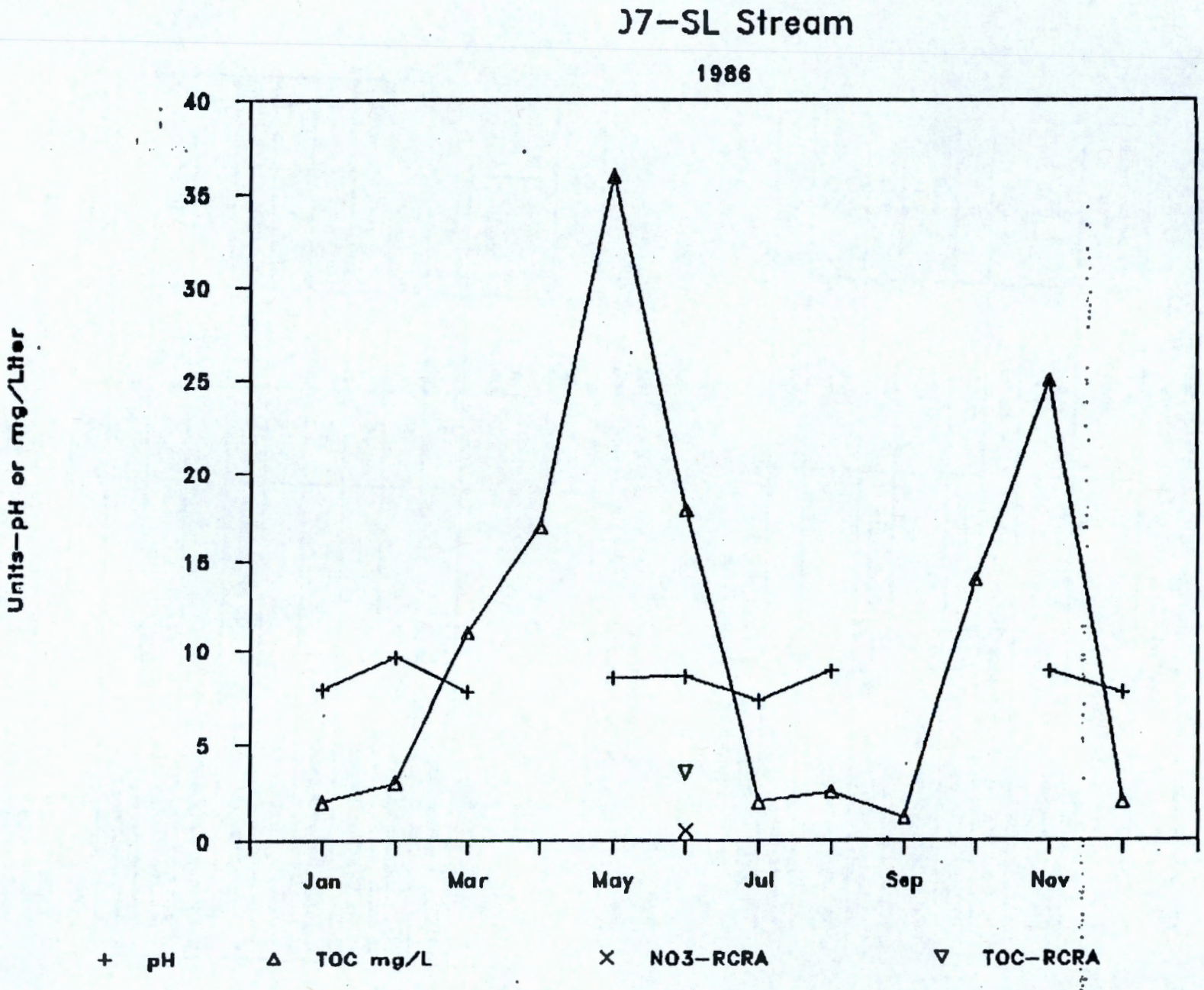
J7-SL Stream
1986
Units-pH or mg/Liter
40
35
30
25
20
15
10
5
0
Jan
Mar
May
Jul
Sep
Nov
+ pH
Δ TOC mg/L
× NO3-RCRA
∇ TOC-RCRA

Figure 4-6

WHC-EP-0141

(Ref. 8)

Table 3-5. Comparison of Major Discharge Effluents to Westinghouse Hanford Company Administrative Control Limit Values.

Effluent	Nuclide	Ratio to control value
PUREX process condensate	$^{89,90}Sr$ ^{241}Am	0.26 0.10
PUREX coil and steam condensate (216-A-30 crib)	$^{239,240}Pu$	0.39
PUREX coil and steam condensate (216-A-37-2 crib)	$^{239,240}Pu$	0.20
UO_3 Plant process condensate	U (gross) ^{99}Tc	0.49 0.34
242-A Evaporator/Crystallizer process condensate	^{129}I	0.11
Laundary wastewater	$^{89,90}Sr$ ^{60}Co	0.12 0.11
PFP wastewater	$^{239,240}Pu$	0.05

PUREX = Plutonium-Uranium Extraction
PFP = Plutonium Finishing Plant.

PST88-3247-16

Table 3-6. Nonradioactive Indicators in Radioactive Liquid Effluents in the Hanford Site 200 Area During Calendar Year 1987.

Effluent	Nitrate[a]		TOC	
	Annual Average mg/L	Annual mass kg	Monthly maximum mg/L	Annual mass kg
PUREX process condensate	15	746	76	2,088
PUREX ammonia scrubber distillate	b	b	5	65
PUREX chemical sewer	2	2,087	16	4,065
UO_3 plant process condensate	222	142	b	b
B plant chemical sewer	13	4,698	3	713
242-A Evaporator/Crystallizer process condensate	2	52	36	489
222-S laboratory chemical sewer	5	184	12	91
West area laundry crib	b	b	33	734
Z plant wastewater	9	1,746	4	459
Total	N/A	9,655	N/A	12,029

[a]Values for nitrate are reported as NO_3.
[b]Analysis not necessary as determined from expected inventory during operations.
TOC = Total organic carbon.
PUREX = Plutonium-Uranium Extraction Plant.
N/A = Not applicable.

PST88-88-3247-3-6

APPENDIX C

WHC-EP-0052

(Ref. 11)

Appendix A: Data Reports

222-S Laboratory Wastewater

Sample	1st	2nd	3rd	4th
Sampling Date	05/31/86	08/18/86	10/03/86	01/06/87
US Testing Number	50053	50113	50149	50214
Stream Fraction	1.0000	1.0000	1.0000	1.0000
Aluminum	1.6E+02	2.4E+02	<1.5E+02	<1.5E+02
Ammonium	<5.0E+01	<5.0E+01	3.9E+02	<5.0E+01
Antimony	<1.0E+02	<1.0E+02	<1.0E+02	<1.0E+02
Barium	3.1E+01	3.3E+01	2.2E+01	2.4E+01
Beryllium	<5.0E+00	<5.0E+00	<5.0E+00	<5.0E+00
Cadmium	<2.0E+00	<2.0E+00	<2.0E+00	<2.0E+00
Calcium	2.0E+04	NIC	1.8E+04	1.7E+04
Chromium	<1.0E+01	<1.0E+01	<1.0E+01	<1.0E+01
Copper	1.7E+01	1.4E+01	2.0E+02	2.0E+02
Iron	9.0E+01	6.1E+01	6.8E+01	5.6E+01
Lead	NR	NR	<5.0E+00	<5.0E+00
Magnesium	4.5E+03	4.1E+03	3.8E+03	3.9E+03
Manganese	9.0E+00	5.0E+00	1.9E+01	5.0E+00
Mercury	<1.0E-01	HTE	HTE	2.1E-01
Nickel	<1.0E+01	<1.0E+01	<1.0E+01	<1.0E+01
Potassium	1.4E+03	1.0E+03	8.9E+02	1.1E+03
Silver	<1.0E+01	<1.0E+01	<1.0E+01	<1.0E+01
Sodium	2.9E+03	2.8E+03	NIC	NIC
Strontium	<3.0E+02	<3.0E+02	<3.0E+02	<3.0E+02
Uranium	7.1E-01	6.1E-01	7.4E-01	<2.5E-01
Vanadium	<5.0E+00	<5.0E+00	<5.0E+00	<5.0E+00
Zinc	<5.0E+00	4.6E+01	2.1E+01	1.4E+01
Chloride	3.3E+03	4.9E+03	2.4E+03	2.0E+03
Cyanide	<1.0E+01	<1.0E+01	<1.0E+01	<1.0E+01
Fluoride	<5.0E+02	<5.0E+02	<5.0E+02	<5.0E+02
Nitrate	8.1E+02	<5.0E+02	2.0E+03	1.6E+03
Phosphate	<1.0E+03	<1.0E+03	<1.0E+03	<1.0E+03
Sulfide	HTE	HTE	<1.0E+03	HTE
Sulfate	1.6E+04	1.3E+04	1.3E+04	1.3E+04
Acetone	<1.0E+01	<1.0E+01	6.0E+01	<1.0E+01
Chloroform	<1.0E+01	3.1E+01	1.1E+01	1.2E+01
Amount (L/month)	2.9E+06	3.8E+06	3.7E+06	2.9E+06
pH (dimensionless)	7.24	5.95	5.72	6.42
Temperature (celsius)	24.2	28.5	23.7	16.8
Alpha Activity (pCi/L)	<4.0E+00	1.8E+00	8.8E+00	7.9E-01
Beta Activity (pCi/L)	5.4E+00	6.2E+00	5.2E+00	5.6E+00
Conductivity (uS/cm)	1.5E+01	1.4E+02	1.1E+02	1.4E+02
Total Organic Carbon (ppb)	2.9E+03	3.5E+03	2.5E+03	<8.8E+02
Total Organic Halide (ppb)	1.8E+02	1.6E+02	<1.0E+02	8.3E+01

Legend: Analyte concentrations are in ppb. Result notations include data that were not recorded (NR) and measurements by methods that were not in control (NIC) at the time of the measurement and measurements made after holding times were exceeded (HTE).

APPENDIX D

nca 10/19/88

Liquid sample from S-26 Crib pit at E End, sampled before pumping to ground

SAMPLE STATUS REPORT FOR E 6032, E-BLANK 216-8-26 TIME: 10/13/88 13:16
DISPATCHED: 10/1[illegible]/88 14: 1 SAMPLE HAS NOT BEEN SLURPED
RECEIVED: 10/17/88 13: 4

EXT.	DETER.	RESULTS OR STATUS	OUT OF RANGE?	GOOD ANS?	CHARGE CODE
****	********	**********	***	***	******
1243	TB-LIQ	< 7.38000E-06 uCI/L	N	Y	WA71B
1303	AT-LIQ	< 2.26000E-06 uCI/L	N	Y	WA71B

END OF REPORT

APPENDIX E

ENVIRONMENTAL PROTECTION DATA SHEET FOR RADIOACTIVE WASTE DISPOSAL SITES

SITE 216-5-26

FREQUENCY OF SURVEY: M BM (Q) SA A CIRCLE ONE

Date: 12/6/88 Radiation Protection Tech: R.m FREDERICK

Survey Card #_____

MAXIMUM DOSE RATE: CP <.5 Micro R meter N/A CHECK ONE OR BOTH

Window Open <.5 @ Contact Window Open <.5 @ 1 Meter

Window Closed <.5 @ Contact Window Closed <.5 @ 1 Meter

SURFACE CONTAMINATION: Use procedure described in the Environmental Surveillance and Control Manual as a guide fo survey. Readings will be in cpm (counts-per-minute) EXCEPT when using a portable alpha monitor for alpha surveys, then readings will be in dpm (disintegrations-per-minute). State instrument used. Attach map of site surveyed to data sheet if contamination is detected, showing location, nature and levels of contamination.

PLEASE CHECK: GM 1151 { 802 PAM N/A

Contamination Found: (Check one or both) Surface____ Subsurface____

Type of contaminated vegetation found: NONE

Total number of LIVE plants found contaminated:_____

Percent of site contaminated with vegetation:_____

Animal Activity (i.e. Burrows, feces) found: NONE

PHYSICAL CONDITION:

Cave in or depressions present: YES____ NO ✓

Concrete ID Posts: YES____ NO ✓

Steel Posts: YES ✓ NO____

Chain: YES ✓ NO____

Type of Zone: Surface____ Underground ✓ Other (Specify)____

General Appearance (HOUSEKEEPING): Good 10 (9) 8 7 6 5 4 3 2 1 Poor

Westinghouse Hanford Company

RADIATION SURVEY REPORT

Date: 12-6-88	Time: From 1230 To 1450	Survey Number: 12372	F.C: N
Bldg: N/A	Area: 600	Room: N/A	
	RWP No.: N/A	Location: 216-S-26 CRIB	

Description of Job: QUARTERLY ROUTINE SURVEY OF THE 216-S-26 CRIB AREA

Check if appropriate. When checked, do not place unrelated information on this record.

- ☐ Personnel Contamination
- ☐ CAM/Radiation Alarm
- ☐ Establish Dose Rates
- ☐ Radiation/Contamination Incident
- ☐ High Radiation Level Work
- ☐ "Special Survey"
- ☐ Property Release
- ☐ RAM Shipment

N/A

Item No	PFR (1)	Description of Work Performed, Radiation Controls, and Measurements	Meter Deflection W/O	Meter Deflection W/C	Dist	C.F	DOSE RATE beta (non pen) mrad/hr	DOSE RATE gamma (pen) mR/hr	DOSE RATE neutron mrem/hr	CONTAMINATION LEVELS Direct (dpm) beta	Direct (dpm) alpha	Smear 100 cm² beta (d/m)	Smear 100 cm² alpha (d/m)	Smear 100 cm² mrad/hr
1.		216-S-26 CRIB AREA	<.5	<.5	E					<D				

1 Check for personnel dose rate ☐ Continued on supplemental report form

Instrument(s) Used	☐ CP	☐ G-M Pancake	☐ PAM	☐	☐	☐
Serial No (s)		1151 / 802				

Respiratory Protection Worn

- ☐ Supplied Air
- ☐ Filter N/A
- ☐ Other
- ☐ None

ESTIMATED PERSONNEL DOSE RATES

Phase of Work	Based on Measurement(s)	Average Dose Rate	Limit Applying
N/A	N/A	N/A	WBP S E N/A
			WBP S E
			WBP S E

RWT Exposure: N/A	Work Location Code: N/A	Signed: R. M. FREDERICK PR No.: 61474
Did you increase or reduce RWP requirements for this work? ☑ No ☐ Yes Explain on reverse side	Did you attend a pre-job meeting for this work? ☑ N.A ☐ No ☐ Yes	Reviewed By: Date:

☆ U.S. GOVERNMENT PRINTING OFFICE: 1988—593-482

BD-6000-010 (12/87)