PLUTONIUM URANIUM EXTRACTION (PUREX) END STATE BASIS FOR INTERIM OPERATION (BIO) FOR SURVEILLANCE AND MAINTENANCE

S

E. N. Dodd, III
B&W Hanford Company, Richland, WA 99352
U.S. Department of Energy Contract DE-AC06-96RL13200

EDT/ECN: 610379 UC: UC-2050
Org Code: 17000 Charge Code: KP4PL
B&R Code: E7050000 Total Pages: ~~134~~ 137
2/22/99

Key Words: PUREX, BIO, S&M

Abstract:

TRADEMARK DISCLAIMER. Reference herein to any specific commercial product, process, or service by trade name, trademark, manufacturer, or otherwise, does not necessarily constitute or imply its endorsement, recommendation, or favoring by the United States Government or any agency thereof or its contractors or subcontractors.

Printed in the United States of America. To obtain copies of this document, contact: Document Control Services, P.O. Box 950, Mailstop H6-08, Richland WA 99352, Phone (509) 372-2420; Fax (509) 376-4989.

2/4/99

Release Approval Date

Release Stamp

DATE: HANFORD RELEASE
STA: 4 ID: 2
FEB 22 1999

Approved for Public Release

PLUTONIUM URANIUM EXTRACTION (PUREX) END STATE BASIS FOR INTERIM OPERATION (BIO) FOR SURVEILLANCE AND MAINTENANCE

EXECUTIVE SUMMARY

This Basis for Interim Operation (BIO) was developed for the PUREX end state condition following completion of the deactivation project. The deactivation project has removed or stabilized the hazardous materials within the facility structure and equipment to reduce the hazards posed by the facility during the surveillance and maintenance (S&M) period, and to reduce the costs associated with the S&M.

This document serves as the authorization basis for the PUREX facility, excluding the storage tunnels, railroad cut, and associated tracks, for the deactivated end state condition during the S&M period. The storage tunnels, and associated systems and areas, are addressed in WHC-SD-HS-SAR-001, Rev. 1, *PUREX Final Safety Analysis Report.* During S&M, the mission of the facility is to maintain the conditions and equipment in a manner that ensures the safety of the workers, environment, and the public. The S&M phase will continue until the final decontamination and decommissioning (D&D) project and activities are begun.

Based on the methodology of DOE-STD-1027-92, *Hazards Categorization and Accident Analysis Techniques for Compliance with DOE Order 5480.23, Nuclear Safety Analysis Reports,* the final facility hazards category is identified as hazards category 2.

This considers the remaining material inventories, form and distribution of the material, and the energies present to initiate events of concern.

Given the current facility configuration, conditions, and authorized S&M activities, there are no operational events identified resulting in significant hazard to any of the target receptor groups (e.g., workers, public, environment). The only accident scenarios identified with consequences to the onsite co-located workers were based on external natural phenomena, specifically an earthquake. The dose consequences of these events are within the current risk evaluation guidelines and are consistent with the expectations for a hazards category 2 facility.

TABLE OF CONTENTS

1.0 INTRODUCTION 1-1
1.1 PURPOSE 1-1
1.2 CONFIGURATION MANAGEMENT SYSTEMS 1-1
1.3 SAFETY ANALYSIS 1-1
1.4 CONCLUSION 1-2

2.0 FACILITY DESCRIPTION 2-1
2.1 FACILITY HISTORY 2-1
2.1.1 Significant Off-Normal Events 2-2
2.1.2 Transition Project 2-9
2.2 FACIITY DESCRIPTION 2-9
2.2.1 PUREX Facilitiy Structures 2-10
2.2.2 Utilities 2-17
2.2.3 Hazards 2-32

3.0 OPERATIONS 3-1
3.1 SURVEILLANCE AND MAINTENANCE ACTIVITIES 3-1
3.1.1 Performance Expectations for PUREX S&M Activities 3-1
3.1.2 Performance Objectives of the S&M Program 3-1
3.1.3 Facility S&M 3-2
3.1.4 Waste Site S&M 3-15
3.2 OPERATING EQUIPMENT/SYSTEMS 3-16
3.2.1 Ventilation 3-16
3.2.2 Surveillance and Monitoring and Control System 3-17
3.2.3 Utilities 3-19

4.0 HAZARDS ANALYSIS 4-1
4.1 HAZARDS CATEGORIZATION 4-1
4.2 HAZARDS ANALYSIS METHODOLOGY 4-2
4.3 HAZARDS ANLAYSIS RESULTS 4-4
4.3.1 Seismic 4-5
4.3.2 Ventilation - Loss of Filtration 4-7
4.3.3 Ventilation - Loss of Power 4-8
4.4 FIRE HAZARDS 4-10
4.5 CRITICALITY SAFETY 4-11
4.6 WORKER SAFETY IMPACTS 4-14
4.6.1 S&M Conditions 4-15
4.6.2 Potential S&M Hazards 4-16
4.6.3 Potential Worker Hazards Identified in the Hazards Analysis . . 4-18

TABLE OF CONTENTS (CONTINUED)

5.0 SAFETY FUNCTIONS AND CONTROLS 5-1
5.1 STRUCTURES, SYSTEMS, AND COMPONENTS 5-1
5.1.1 HVAC System 5-2
5.1.2 SAMCONS 5-3
5.1.3 Utilities 5-3
5.1.4 Confinement Structures 5-4
5.2 ADMINISTRATIVE CONTROLS/DERIVATION OF TSRS 5-4
5.3 PROGRAMMATIC CONTROLS 5-5
5.4 FACILITY SPECIFIC CONTROLS 5-7
5.4.1 USQ Process/Configuration Control 5-8
5.4.2 Criticality Safety 5-9
5.4.3 Fire Protection 5-9

6.0 REFERENCES 6-1

APPENDICES

A FINAL HAZARDS CATEGORY DETERMINATION A-1

B HAZARDOUS MATERIAL INVENTORIES B-1

LIST OF FIGURES

2-1. Hanford Site 2-1
2-2. PUREX Facility and Adjacent Buildings 2-3
2-3. Cross-Section of PUREX Facility 2-5
2-4. Plan Views--PUREX 202-A Building 2-6
2-5. Plan Views--PUREX 202-A Building 2-7
2-6. PUREX Facility Layout 2-8
2-7. Electrical System 2-19
2-8. Electrical System 2-21
2-9. Electrical System 2-23
2-10. Electrical System 2-25
2-11. PUREX Ventilation Stack Locations 2-28
2-12. PUREX HVAC Consolidation Flow Diagram 2-29
2-13. PUREX HVAC Consolidation Flow Schematic 2-30
2-14. PUREX Final Filter Configuration 2-31
2-15. SAMCONS System 2-33
2-16. SAMCONS System 2-35
2-17. SAMCONS System 2-37
2-18. SAMCONS System 2-39
2-19. SAMCONS System 2-41
2-20. SAMCONS System 2-43
2-21. SAMCONS System 2-45
3-1. PUREX Pipe and Operating Gallery Surveillance Route (West End) 3-3
3-2. PUREX Pipe and Operating Gallery Surveillance Route (East End) 3-5
3-3. PUREX Storage Gallery Surveillance Route (West End) 3-7
3-4. PUREX Storage Gallery Surveillance Route (East End) 3-9
3-5. PUREX Office and Lunchroom Area Surveillance Route 3-11
3-6. PUREX Consolidated HVAC Flow Diagram 3-18
4-1. Illustration of the Hazards Analysis Approach 4-1
4-2. Cutaway View of PUREX N-Cell 4-12
4-3. Floor Plan of PUREX West End, Building 202-A 4-13
A-1. Seismic Event Occurrence Rates for the Hanford Site A-2

LIST OF TABLES

2-1. PUREX Facility S&M Buildings and Structures 2-11
2-2. Seismic Analyses Summary 2-17
2-3. PUREX Radiological Inventory Estimates 2-48
4-1. Consequence Classes 4-4
4-2. Likelihood Classes 4-4
4-3. Potential Releases from Deactivated PUREX 4-5
4-4. Dose Consequences of Collapse of ECMP 4-7
4-5. Loss of Ventilation Release Quantities 4-7
4-6. Dose Consequences of Ventilation Scenario AVS-4 4-8
4-7. Dose Consequences of Loss of Ventilation Power Scenario 4-8
4-8. Onsite Dose Consequences of Extended HVAC Failure Times 4-9
4-9. Failure of the HVAC for Days 4-10
A-1. Radionuclide Estimates for Deactivated PUREX A-1
A-2. Final Hazards Category Determination A-4
B-1. Non-Radiological Hazarous Material in Deactivated PUREX B-1
B-2. Radiological Inventory in Deactivated PUREX B-15
B-3. Detailed Residual Radiological Material In Deactivated PUREX B-17

LIST OF TERMS

BIO	basis for interim operation
CAS	criticality alarm system
CSER	criticality safety evaluation report
D&D	decommissioning and dismantlement
FHA	fire hazards analysis
FSAR	final safety analysis report
HC	hazards classification
HEPA	high-efficiency particulate air (filter)
MCM	minimum critical mass
PFP	Plutonium Finishing Plant
PHA	preliminary hazards analysis
PR	Product Removal (corridor/room)
PUREX	Plutonium Uranium Extraction
RCRA	Resource Conservation and Recovery Act
S&M	surveillance and maintenance
SAMCONS	Surveillance and Monitoring and Control System
TBP	tributyl phosphate
TSR	technical safety requirement
UNH	uranyl nitrate hexahydrate
USQ	unreviewed safety question
WHC	Westinghouse Hanford Company

This page intentionally left blank.

1.0 INTRODUCTION

This Basis for Interim Operation (BIO) documents the facility conditions, active equipment, and authorized activities for the safe operation of the Plutonium Uranium Extraction (PUREX) facility at the Hanford Site. The requirements of DOE-STD-3011-94, *Guidance for Preparation of DOE 5480.22 (TSR) and DOE 5480.23 (SAR) Implementation Plans,* and the guidance in DOE-STD-3009-94, *Preparation Guide for U.S. Department of Energy Nonreactor Nuclear Facility Safety Analysis Reports,* were used in the development of this document. The scope and objective of this BIO is the safe surveillance and maintenance of the PUREX facility, excluding the storage tunnels, railroad cut and associated tracks (identified as PUREX in this document), based on the conditions resulting from the completion of the transition project, and the authorized S&M activities. In keeping with the intent of the BIO, where appropriate, this document references the existing documentation and evaluations rather than reproducing them here. Also in keeping with guidance on BIO development and use, this BIO is limited to two years.

1.1 PURPOSE

This document identifies the hazards, controls, and authorized activities that constitute the PUREX deactivated S&M authorization basis. The PUREX deactivation project has placed the facility in a safe configuration and condition for an extended S&M period. Additionally, it identifies the authorization basis for the S&M period, and supercedes the authorization basis documents in effect during the transition project.

1.2 CONFIGURATION MANAGEMENT SYSTEMS

The safety of the PUREX facility as described in this document is based upon the facility conditions, activities, and equipment being maintained as described. Any changes to these conditions during the S&M period will require assessment against this authorization basis, using the unreviewed safety question (USQ) process, to ensure that the changes are within the authorization basis.

Additionally, it is the responsibility of the organization managing the facility during the S&M phase to ensure that information, such as facility drawings and procedures, is maintained current to any facility changes. The systems used to ensure this process are to be identified and controlled by the receiving organization. Facility drawings and procedures will be maintained current to the configuration of the facility as described in this BIO.

1.3 SAFETY ANALYSIS

The deactivated PUREX facility has been evaluated using the Preliminary Hazards Analysis (PHA) process. The details of this analysis are discussed in Section 4 of this BIO. Based on this analysis and the hazards category determination in Appendix A,

the deactivated S&M PUREX facility is identified as a Hazards Category 2 facility per the requirements of DOE 5480.23 and DOE-STD-1027-92. This classification is based on the consequence of unmitigated releases of the remaining radioactive and/or non-radioactive hazardous materials and the authorized activities during the S&M period.

Using the form, distribution, inventory data, and sample data, the hazards analysis did not identify any accident scenarios that exceed the criteria in Project Hanford Safety Analysis Procedures for exposure to the onsite or offsite individual. These consequence evaluations were based on unmitigated releases. As a result, no systems are identified which are required to prevent or mitigate the hazards associated with the PUREX deactivated S&M facility conditions. However, based on defense in depth criteria, the 202-A Building and the Deep bed filter containment structures are identified as safety significant structures.

Additional evaluation was performed for the hazards to the worker during the S&M period. This was based on the S&M activities and the facility areas identified for these activities. The hazards associated with the S&M activities are detailed in the hazards analysis section of this BIO. Hazards identified with potential impact to the facility worker during S&M were consistent with general occupational or radiological exposure hazards.

1.4 CONCLUSION

The completion of deactivation activities has placed the PUREX facility in a safe condition for an extended period of S&M. Given the form and distribution of materials remaining within the PUREX facility, the available energy sources, and the authorized S&M activities, the hazards associated with PUREX during S&M are minimal and do not require safety systems to prevent or mitigate the scenarios evaluated in this document.

Changes to the facility, either physical or regarding authorized activities, must be evaluated to ensure that they do not change the conditions analyzed in this document. The development and implementation of a configuration control system to ensure that this requirement is met is the responsibility of the receiving S&M organization.

Other than as a result of natural phenomena (e.g., earthquakes), the PUREX facility during S&M poses primarily industrial safety and radiological hazards. These hazards are consistent with those in any radiological facility and do not require any special programs or measures to protect the workers during these activities. All of the accident scenarios identified and evaluated had consequences well within the current risk guidelines.

2.0 FACILITY DESCRIPTION

The purpose of this BIO is to identify the conditions and configuration of the deactivated PUREX facility. This information is used in the identification and evaluation of the risks posed by the facility during the S&M period. Information related to the final facility configuration, and the operational history are discussed in this chapter.

2.1 FACILITY HISTORY

The PUREX facility was designed and operated to recover plutonium, uranium, and neptunium from irradiated fuel elements received from N Reactor and single pass reactors. Plutonium was recovered as an acidic solution of plutonium nitrate, or converted to plutonium oxide in N-Cell, as appropriate and transferred to the Plutonium Finishing Plant (PFP). Uranium was recovered as uranyl nitrate hexahydrate (UNH), which was transferred for further processing to the UO_3 Plant. Neptunium was recovered and transferred to other Hanford facilities. The location of the PUREX facility on the Hanford Site is illustrated in Figure 2-1.

Figure 2-1. Hanford Site.

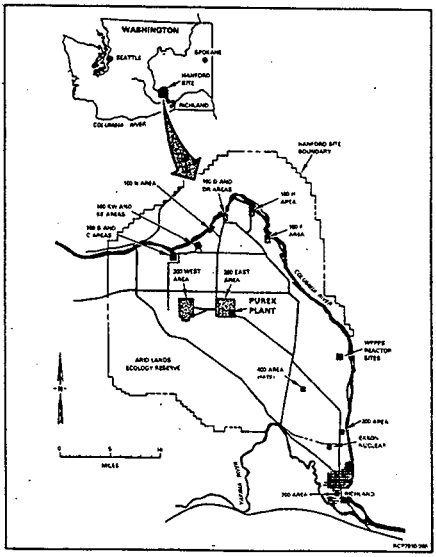

Construction of PUREX began in 1952 and the facility began operating in 1956. The operation was shut down in September 1972. The facility was maintained in a wet-standby mode until 1978, with process and support equipment operated on a regular basis. Failed equipment was either upgraded or replaced. From 1978 to 1983, the plant proceeded through cold start-up tests to operation in November 1983. PUREX was fully operational until 1988 when it was again shut down. The facility began transition into a cold stand-by mode in October 1990, and it was achieved in September 1992. In December 1992, planning was initiated to change the status of the PUREX facility from a cold-standby mode to a deactivation mode (or transition to shut-down). The PUREX facility, adjacent buildings, and facilities are illustrated in Figure 2-2 and the associated legend. Figure 2-3 provides an illustration of a cross-sectional cut of the PUREX facility. Figures 2-4 and 2-5 illustrate plan views of the facility.

2.1.1 Significant Off-Normal Events

While incidents have occurred involving the loss of control of radioactive materials at PUREX throughout its history, few have been serious, and most occurred early in processing operations.

The first significant event occurred in the second month of operations (February 1956), when an instrument line leading to the L-6 stripper/concentrator (part of the final plutonium decontamination cycle) released about 20 gallons of plutonium-bearing solution into the west end of the P&O gallery. The vessel had been subject to repeated plugging, and the incident occurred when the operators attempted to open valves and lines. Liquid contamination was spread through the chemical sewer drain, the canyon lobby, the P&O gallery, and into R-Cell. Airborne contamination was drawn by the exhaust fans throughout the P&O gallery, other 202-A Building locations, and into the environment. So many coats of white sealant paint were applied to the immediate area of the spill in the west end of the P&O gallery that the area became known as the White Room. In 1957, a shielding wall and separate ventilation system were installed to isolate the White Room, and the area remains a contamination zone today, and will be surveilled and monitored during the S&M period.

The second serious event occurred two years later (February 1958) when the bottom portion of the silver reactor filter in A-Cell exploded. The huge filters, 8-foot-thick beds of packing material coated with silver nitrate, absorbed and reacted with the radioiodine in the dissolver off gases. Once saturated, they were regenerated with an ammonium hydroxide flush. It was presumed that the 1958 uncontrolled reaction (explosion) occurred when unstable products formed in the ammonia-silver salts mixture. Although there was little detectible spread of contamination to other portions of the PUREX building and none to the environment, cleanup and repair were difficult because the filter was located in a heavily shielded inaccessible area. There is no impact from this event on current facility condition.

Figure 2-2. PUREX Facility and Adjacent Buildings.

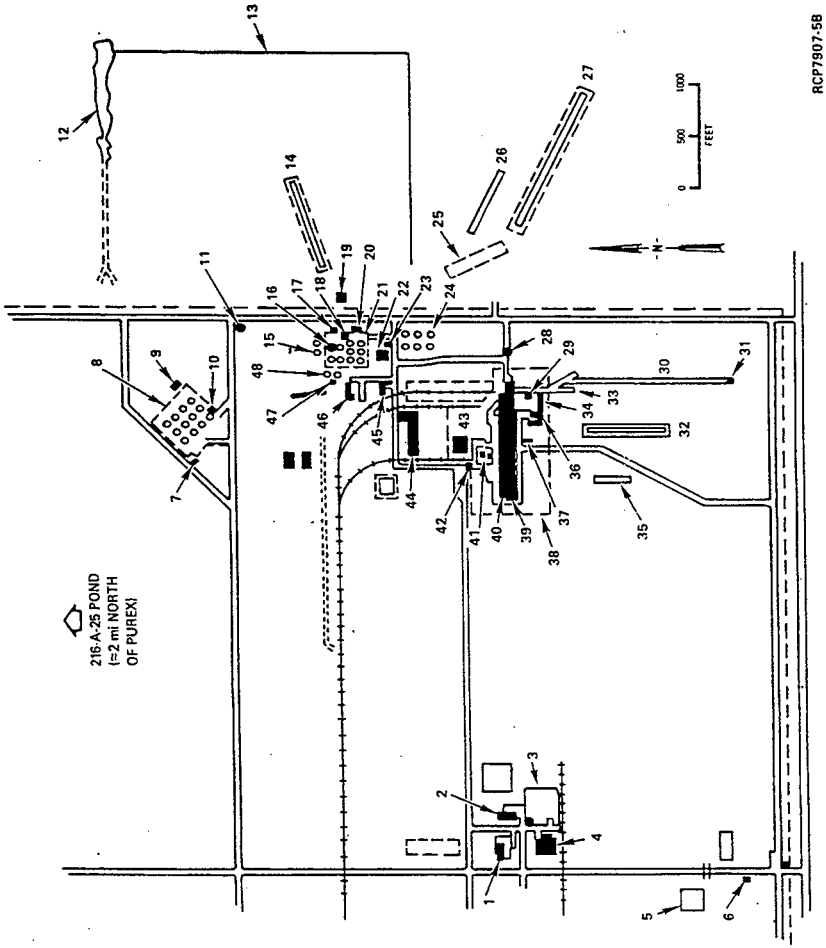

Figure 2-2 - LEGEND

1. Filter plant (293-3)
2. Powerhouse (284-E)
3. Coal Pile
4. Reservoir (282-E)
5. Waste Management Surveillance Building (2750-E)
6. Office equipment repair (2709-E)
7. Diversion Boxes (241-C-151 to -153, 241-CR-151 to -153, 241-C-252)
8. Waste storage tank farm (241-C)
9. Cesium loadout (241-C-801)
10. Control House (271-CR)
11. Emergency water well
12. B Plant pond (216-B-3)
13. PUREX Chemical sewer ditch
14. Contact condenser crib
15. Waste storage tank farm (2410AZ)
16. Transfer box (241-A-153)
17. Coolant building (241-A-401)
18. Change and control building (2707-AX)
19. Cribs (216-A-1 and -7)
20. Diversion Box (241-A-302-B)
21. Waste Storage tank farms
22. Evaporator building (242-A)
23. Retention basins (207-A)
24. Waste storage tank farm (241-AW)
25. Retention basin (216-A-42)
26. Steam condensate crib (216-A-37-1)
27. Steam condensate crib (216-A-30)
28. Cooling water tank (241-A-201)
29. Offgas treatment and acid recycle building (293-A)
30. Railroad tunnel (218-E-15)*
31. Monitoring station
32. Cribs (216-A-2, -4, -21, -36)
33. Railroad tunnel (218-E-14)*
34. Fanhouse and stack (291-A)
35. Process condensate crib (216-A-10)
36. Exhaust filters
37. Storage
38. Exclusion-area fence (double)
39. Separations building (202-A)
40. PUREX building annex
41. Chemical storage (211-A and 2714-A)
42. Gatehouse (2701-A)
43. UNH Storage area
44. Warehouse (275-E)
45. Waste diverter station (241-AX-151)
46. 244-AR Vault
47. Stack (291-AR)
48. Waste storage tank farm (241-AY)

* Excluded from this BIO.

Figure 2-3. Cross Section of PUREX Facility.

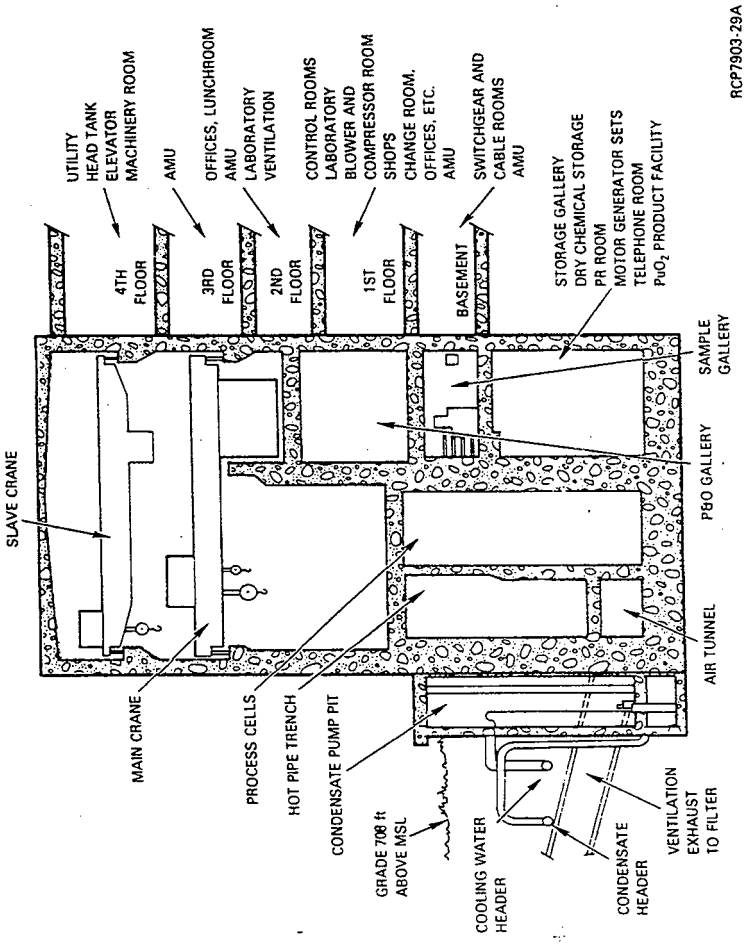

Figure 2-4. Plan Views--PUREX 202-A Building. (2 Sheets)

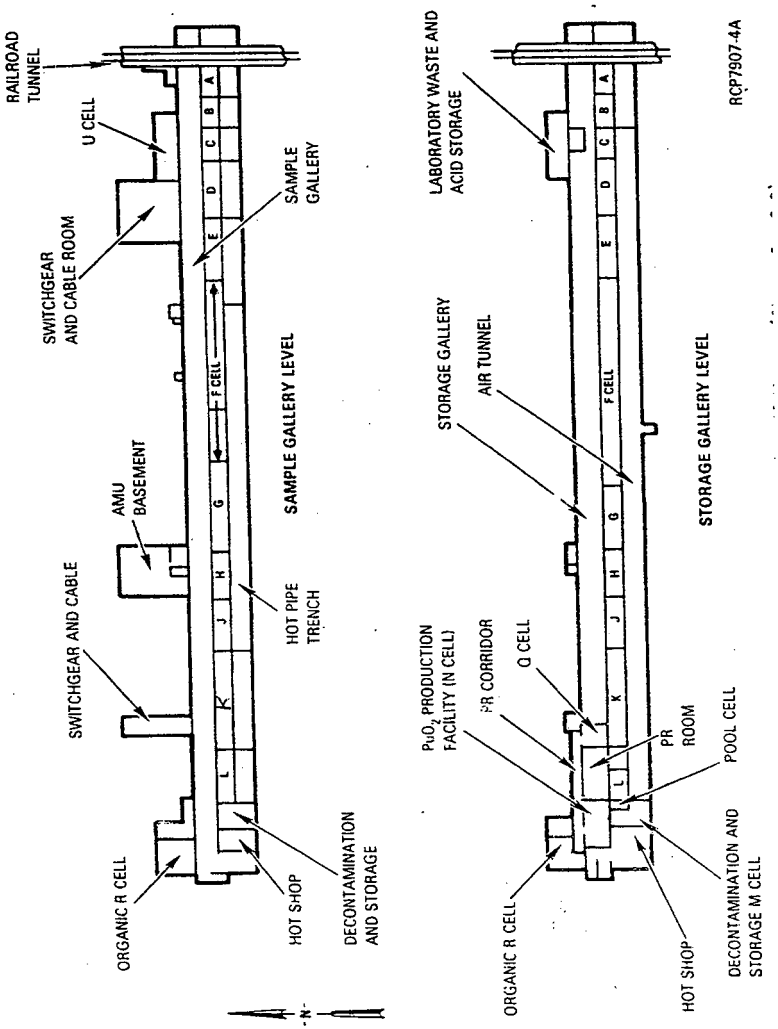

Figure 2-5. Plan Views--PUREX 202-A Building. (2 Sheets)

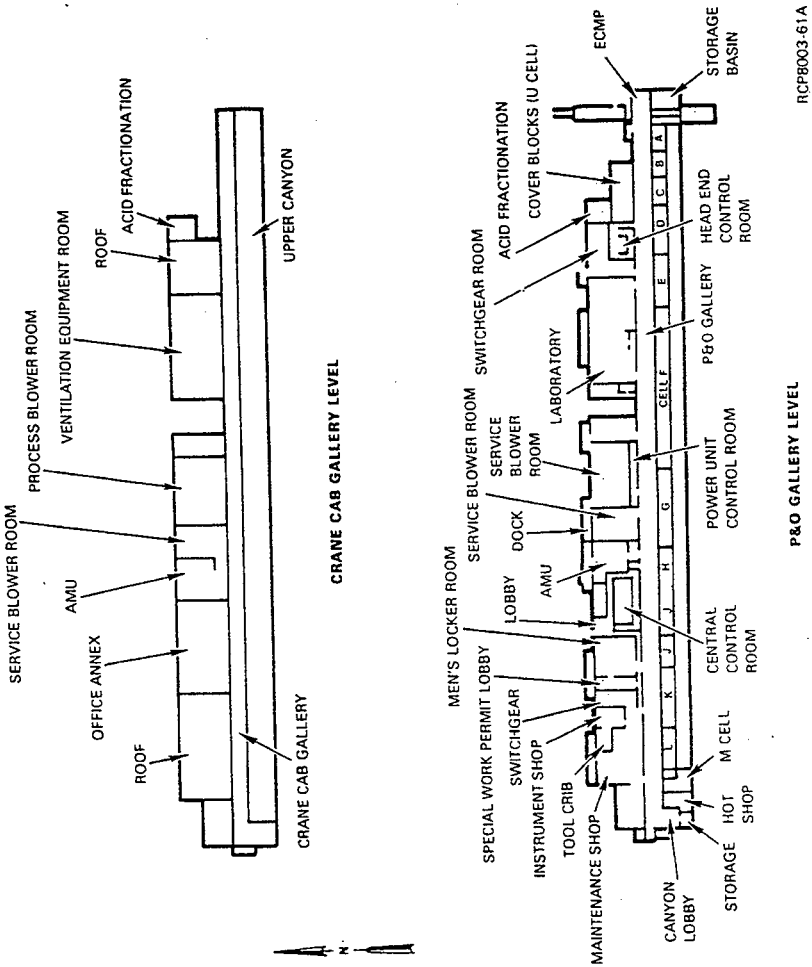

Figure 2-6. PUREX Facility Layout.

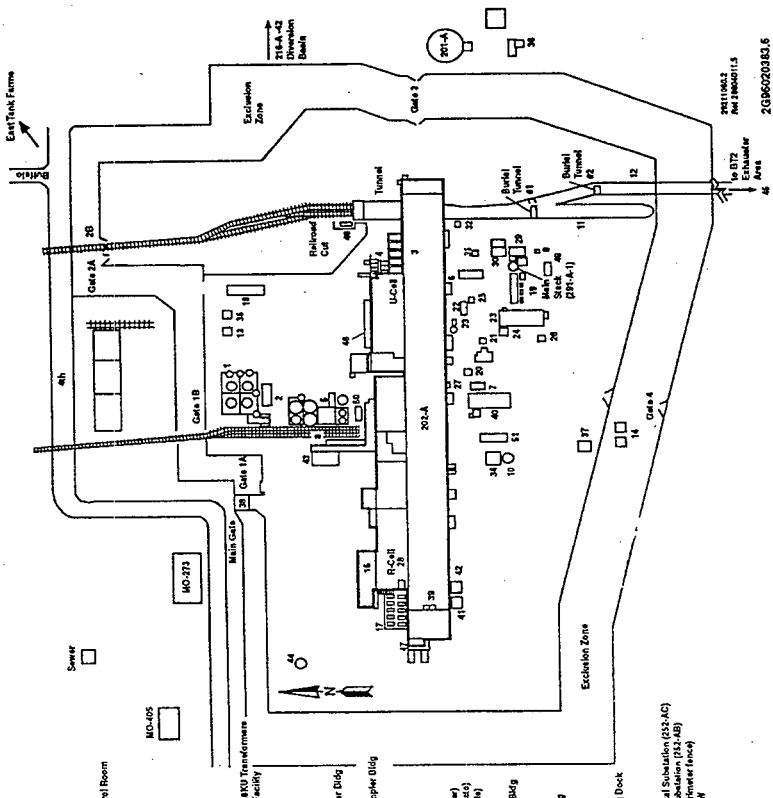

The third significant incident (June 1964) occurred when first-cycle acid waste from the PUREX Plant accidentally was discharged to the cooling water swamp southeast of the 202-A Building. An estimated 10,000 Curies (Ci) of mixed fission products (primarily Zr/Nb-95, Ce-141/144, and Ru 103/106) were released and settled in the mud and algae. Corrective action included killing the algae, covering the contaminated ditch area that flowed to the swamp with backfill, and digging partial new ditch/swamp areas. There is no impact from this event on current facility condition.

While not, strictly speaking, an off-normal event, the years of operations have resulted in accumulation of significant material on the L-Cell floor. This material was accumulated as the result of process leaks, and normal operational losses. The estimated inventory value for the L-Cell is 3,896 grams of plutonium.

2.1.2 Transition Project

The transition project established a safe and environmentally secure configuration for PUREX, which can be maintained for a minimum 10-year horizon. The following criteria apply to PUREX at the time of deactivation and continue up to the point of final decontamination and decommissioning (D&D) activities (WHC 1995):

- Major sources of radioactive and hazardous materials removed, reduced, and/or stabilized (reasonable best effort).
- Criticality Alarm System deactivated, residual fissionable material removed or left in a benign (critically safe) state.
- The majority of buildings/structures have either No Access or only Quarterly Access by surveillance personnel following a specified route during routine facility inspections. These inspection routes are illustrated and discussed in Chapter 3 of this document.
- PUREX utilities are isolated/removed except as described in Section 3.2.
- PUREX facilities are locked to prevent unauthorized access.

2.2 FACILITY DESCRIPTION

The following is a description of the main PUREX structures in the final deactivated configuration. These configurations and conditions were used in the hazards analysis to support this BIO. The PUREX Final Safety Analysis Report (FSAR) contains a more detailed description of the facility and systems based on the operations of the facility. For more information the FSAR and it supporting documents should be consulted. However, the FSAR material does not impact the authorization basis as described in the BIO. All of the information relied upon in assessing the facility hazards and controls in the deactivated state have been included in this document. The FSAR

material is mentioned for historical information that may prove useful in evaluating the options for final facility disposition, it is not included as an authorization basis document for the extended S&M period.

A complete listing of the PUREX S&M facility buildings and structures is contained in Table 2-1. Not all of the structures identified in this table warrant discussion here. For discussion purposes, only those facilities that contain sufficient material or hazards to impact the outcome of the hazards analysis and related controls are included.

Figures 2-2 through 2-6 are provided to illustrate the general layout of the PUREX facility and the key areas. These figures are provided for information only and do not identify the facility condition as defined in this BIO. The detailed listing of facility structures and buildings is contained in Table 2-1.

2.2.1 PUREX Facility Structures

The 202-A Building is 306.32 m (1,005 ft) by 36.27 m (119 ft) by 30.48 m (100 ft) high, with approximately 12.19 m (40 ft) below grade and 18.29 m (60 ft) above grade. This was the primary processing building for the PUREX operation.

The building's main structural components are (1) a thick-walled, heavily shielded concrete portion called the canyon, which contains processing equipment; (2) a section comprised of three gallery levels parallel to and isolated from the canyon; (3) a steel and transite annex to the north of the gallery section that houses offices, the laboratory, and a number of building service areas; and (4) a reinforced-concrete railroad tunnel forming a "T" at the east end. This tunnel is not included in the scope of this document and is addressed in a separate hazards analysis and BIO.

The canyon area proper is a narrow structure, 306.32 m (1,005 ft) by 9.30 m (30.5 ft) by 30.48 m (100 ft) high. The canyon is subdivided into a single row of 12 process cells paralleled on the south side by a hot (radioactive) pipe trench with an air tunnel connected to the cells running underneath the pipe trench. Three gallery levels parallel to but isolated from the canyon on the north side of the structure contain service piping and process instrumentation equipment used in obtaining process samples and providing storage space for equipment and dry chemicals.

Two annex buildings are located on the north side of the canyon: the Office Annex and the Laboratory Annex.

Table 2-1. PUREX Facility S&M Buildings and Structures. (4 sheets)

Facility #	Function	Description
202-A	PUREX facility building	Main fuel reprocessing canyon building, lab and attached annex
203-A	Acid pump house/acid storage and handling facility	Storage tanks/pumps/piping used for transferring concentrated nitric acid/UNH
204-A	U-Cell	Acid storage vault (below grade)
206-A	Fractionator building	Equipment/piping used to recover/concentrate contaminated nitric acid
210-A	Drum storage area	Storage area located east of 203-A
211-A	Bulk cold chemical tank farm	Pump house/tank farm for bulk process chemicals & process water demineralizer units
212-A	Fission product load out	Liquid waste load out station
213-A	Fission product load in	Temporary storage for contaminated dry waste
214-A/B/C/D	PUREX facility warehouse	PUREX warehouse/hazardous material storage area
215-A	Sodium hydroxide instrument pad (concrete pad remaining)	Former sodium hydroxide handling facilities (never used)
216-A	Spud cellar sample pit	Valve control facility
225-EC	TEDF monitoring bldg.	TEDF monitoring electronic systems
271-AB	PUREX maintenance facility	Annex attached to 202-A, contains offices & maintenance shop
276-A	R-Cell	Solvent recovery & storage. Containing process towers from R-Cell regeneration
281-A	Emergency generators	Standby power
291-A	Exhaust fans	Canyon exhaust air filter/stack plenum
291-AB	Exhaust air sample shack	Stack monitoring instrument shack
291-AC	Exhaust air instrument house	Stack monitoring instrument shack
291-AD	Ammonia off-gas filter building	Ammonia filter pit and stack
291-AE	# 4 filter building	Exhaust stack monitoring instrument shack
291-AG	Sample station #2	Exhaust stack monitoring instrument shack
291-AH	Ammonia off-gas sample station	Exhaust stack monitoring instrument shack
291-AJ	Sample station #3	Exhaust stack monitoring instrument shack
291-AK	Air tunnel enclosure	Tunnel spray enclosure/caissons
291-A-1	202-A Main Stack	200 ft concrete stack SW of main canyon bldg
292-AA	PR stack sample house	PR exhaust sampling and monitoring
292-AB	Gaseous effluent monitoring bldg (main stack bldg)	East of main stack; contains monitoring, sampling & flushing equipment
293-A	Dissolver off-gas station	4 process cells, 2 absorption towers
293-AA	Former hydrogen peroxide storage (concrete pad remaining)	Concrete retention area, deactivated
294-A	Off-gas instrument shack	Off-gas treatment/monitoring station

Table 2-1. PUREX Facility S&M Buildings and Structures. (4 sheets)

Facility #	Function	Description
295-A	ASD sample station	Effluent sample shack
295-AA	SCD sample/pump station	Effluent sample shack
295-AB	PDD sample station	Effluent sample shack
295-AC	CSL sample station	Effluent sample shack
295-AD	CWL sample station	Effluent sample shack
295-AE	PDD monitoring building	New PDD (never used)
296-A-1	Stack	202-A N&Q cell & PR room exhaust
296-A-2	Stack	202-A west sample gallery hoods exhaust
296-A-3	Stack	East sample gallery exhaust
296-A-5A	Stack	Labs hood exhaust
296-A-5B	Stack	Labs hood exhaust
296-A-6	Stack	Sample gallery and U cell hood exhaust
296-A-7	Stack	West sample gallery, Pr corridor, N & R cell exhaust
296-A-8	Stack	P&O and white room exhaust
296-A-9	Stack	Storage tunnel #1 exhaust
296-A-10	Stack	Storage tunnel # 2 exhaust
296-A-14	Stack	293-A off-gas treatment/recovery bldg
296-A-24	Ammonia off-gas	Ammonia off-gas
216-A-42	Diversion basin	1.8 M gallon basin
2701-AB	Badge house	Upper area plus basement
2701-AC	Patrol guard shack	NW corner 202-A roof
2711-A-1	Air compressor building	Equipment for dry air to gloveboxes
2712-A	Pump house	Air sampling vacuum pumps
2714-A	Chemical warehouse	North of 202-A, storage for dry & liquid containerized chemicals
2714-U	Warehouse	Warehouse at 200W area
2901-A	Water tank	
252-A	Electrical switch station	Electrical switch station & 13.8 KV transformers
217-A	Surveillance and Monitoring Control System (SAMCONS) Instrumentation & Control (I&C) Unit	Main acquisition center for monitoring data
252-AC	Surveillance lighting electrical substation	Supplies 750 KVA to surveillance lighting
252-AB	Main electrical switchgear substation	Supplies 1500 KVA to remaining operating systems
216-A-2	Crib	Engineered waste site
216-A-4	Crib	Engineered waste site
216-A-5	Crib	Engineered waste site

Table 2-1. PUREX Facility S&M Buildings and Structures. (4 sheets)

Facility #	Function	Description
216-A-11	French drain	Engineered waste site
216-A-12	French drain	Engineered waste site
216-A-13	French drain	Engineered waste site
216-A-14	French drain	Engineered waste site
216-A-15	French drain	Engineered waste site
216-A-21	Crib	Engineered waste site
216-A-22	French drain	Engineered waste site
216-A-26/A	French drain	Engineered waste site
216-A-26B/33	French drain	Engineered waste site
216-A-31	Crib	Engineered waste site
216-A-32	Crib	Engineered waste site
216-A-35	French drain	Engineered waste site
216-A-36A	Crib	Engineered waste site
216-A-38-1	Crib	Engineered waste site (never used)
216-A-45	Crib	Engineered waste site
2607-EE/2903-A	Tile field	Engineered waste site.
202-A HWSA	202-A building integral waste site	Hazardous waste storage site
202-A NU	202-A building integral waste site	202-A elementary neutralization unit
202-A-E-F11	202-A building integral waste site	Concentrator E-F11
202-A-E5	202-A building integral waste site	Tank E5
202-A-F15	202-A building integral waste site	Tank F15
202-A-F16	202-A building integral waste site	Tank F16
202-A-F18	202-A building integral waste site	Tank F18
202-A-G7	202-A building integral waste site	Tank G7
202-A-U3	202-A building integral waste site	Tank U3
202-A-U4	202-A building integral waste site	Tank U4
202-A-WS-1	202-A building integral waste site	Waste piles
211-A NU	202-A building integral waste site	211-A elementary neutralization unit
200-E-33	202-A building integral waste site	214-A 90-Day waste accumulation area
200-E-34	202-A building integral waste site	High level waste room, 90-Day accumulation area
200-E-39	202-A building integral waste site	Room 52 Hood, 90-Day accumulation area
200-E-40	202-A building integral waste site	Overflow of 216-A-36B crib sampler
UPR-200-E-13	Unplanned release site	Overflows from 216-A-4 crib contaminated 291-A turbine house and area S of doorway
UPR-200-E-15	Unplanned release site	Overflows from 216-A-4 crib contaminated 291-A turbine house and area S of doorway
UPR-200-E-17	Unplanned release site	Overflow of 216-A-22 crib inlet
UPR-200-E-19	Unplanned release site	Drips at 216-A-6 crib sampler

Table 2-1. PUREX Facility S&M Buildings and Structures. (4 sheets)

Facility #	Function	Description
UPR-200-E-22	Unplanned release site	291-A-1 stack fallout SE of PUREX
UPR-200-E-28	Unplanned release site	Contamination from open trap pit SE of PUREX
UPR-200-E-39	Unplanned release site	Overflow of 216-A-36B crib sampler, twice
UPR-200-E-35	Unplanned release site	Contaminated pipe reburied where found
UPR-200-E-40	Unplanned release site	N/A
UPR-200-E-66	Unplanned release site	Contamination in/around 216-A-42 diversion basin
UPR-200-E-96	Unplanned release site	Contamination from 291-A-1 stack and 151 diversion box SE of PUREX
UPR-200-E-97	Unplanned release site	Area W of RR tunnel contaminated by unknown source
UPR-200-E-117	Unplanned release site	Contaminated liquid spilled during excavation between 151 diversion box and RR tunnel
200-E-42	Unplanned release site	291-A-1 stack fallout SE of PUREX

The 271-AB Office/Maintenance Annex is a 9.75 m (32-ft) by 32 m (105-ft) by 8.53 m (28-ft) high two-story building located on the north side and at the west end of the 202-A Building. The exterior walls are steel-on-steel frame, a built-up roof on steel decking on steel frame, and interior gypsum board walls, wood doors, and carpeted floors. This annex contained operations offices and maintenance facilities.

The Laboratory Annex is a 54.86 m (180-ft) by 12.29 m (60-ft) two-story building. The first floor was occupied by numerous laboratories, with the second floor housing heating, ventilating, and air conditioning (HVAC) equipment for the Annex, as well as concrete high-efficiency particulate air (HEPA) filter enclosures for the hoods located in the laboratories below. There are several small steel-on-steel frame, transite-on-steel frame, and partially and fully enclosed structures located on the north side of this annex. These structures housed flammable gas manifolds, compressed gas cylinder storage, and regulated/non-regulated drum storage.

203-A Storage Area

The 203-A Storage Area is a 37.49 m (123-ft) by 31.39 m (103-ft) by 1.83 m (6-ft) high reinforced concrete diked area surrounding storage tanks used for UNH and other acidic solutions. The area is located to the north of both the 202-A Building and the 211-A Liquid Chemical Tank Farm. The area is isolated from utilities and other structures remaining at the end of deactivation. There are four 378, 500 L (100,000-gallon) capacity tanks located within individual diked sections, and three smaller capacity tanks within the diked area. All tanks are empty or flushed per approved end point criteria with only a minimum heel remaining at the completion of the Deactivation Project. Adjacent to this diked area is the 203-A Building. The 203-A Building is a 14.33 m (47-ft) by 3.66 m (16-ft) by 3.66 m (12-ft) high reinforced

concrete structure used to house pumps and the control room for the 203-A storage tanks. A rail car and truck loading/unloading station are located on the west side of this area. To the east of the 203-A area is a 36-ft by 25-ft by 20-ft-high metal building used for the storage of empty metal drums.

204-A Building (U-Cell)

The 204-A Building "U-Cell" is a 23.16 m (76-ft) by 7.62 m (20-ft) by 10.67 m (35-ft) high concrete structure (vault) built below grade, with removable concrete cover blocks extending above grade forming the building roof. U-Cell contains four large tanks, two of which (U1 and U2) were used for recovered nitric acid and laboratory waste collection. Currently, U-Cell is accessed through the 202-A sample gallery.

206-A Building (Fractionator)

The 206-A Building, commonly called the Fractionator Building, is a 10.67 m (30-ft) by 7.32 m (24-ft) building with a split-level roof having heights of 13.72 m (45 ft) and 8.84 m (29 ft). The building walls, floor, and roof are constructed of reinforced concrete. This building is adjacent to U-Cell and contains a vacuum fractionator and associated equipment used for concentrating recycled nitric acid.

211-A Liquid Chemical Tank Farm

The 211-A Liquid Chemical Tank Farm was used to store bulk liquid chemicals used in PUREX operations. The area is located to the north of the 202-A Building and south of the 203-A Storage Area. In the deactivated state, this area is isolated from PUREX utilities and other remaining structures.

There are two tank areas; each has reinforced concrete diking to surround tanks used for storage of various chemicals. The north area has four tanks, each within an individual diked segment. The remaining (17) tanks are located in a common south diked area. Tank 40 in the north tank area was used to store approximately 81,386 L (21,500 gallons) of slightly contaminated organic solvent (~23 vol% tributyl phosphate [TBP], ~77 vol% normal paraffin hydrocarbon [NPH]). Tank 40 was completely drained, no flushing was performed. All other tanks were emptied or flushed with water and have only minimum heels remaining.

The 211-A Building is a 16.76 m (55-ft) by 16.76 m (55-ft) by 4.72 m (15-ft) high metal building. The walls are constructed of transite siding on a steel frame and the floor is concrete. The roof is concrete with a built-up tar and gravel covering. The building housed process pumps and motor control centers for two tank areas.

A rail car loading/unloading station is located on the west side of this area. A truck unloading station is located on the east side of this area.

276-A Building (R-Cell)

The 276-A Building "R-Cell" is a 19.81 m (65-ft) by 7.01 m (23-ft) by 10.67 m (35-ft) high concrete structure (vault) built below grade with removable concrete cover blocks extending above grade forming the building roof. R-Cell provided organic solvent decontamination and storage. Currently, R-Cell is accessed through the 202-A sample gallery (R-Cell centrifuge platform) or through the PR corridor (R-Cell vault floor).

Ventilation System Buildings/Structures

There are several buildings/structures associated with PUREX facilities ventilation systems. Buildings/structures associated with the active portion of the 202-A Building ventilation system include the #2 Deep-Bed Filter, the 291-AE (Fourth Filter Building), the 291-A (exhaust plenum and fan pad), the 291-A-1 (Main Stack), air tunnels, and the 292-AB (Main Stack Monitoring Building). Additional description of this system is contained in Section 2.2.2.2 of this BIO.

Buildings/structures associated with deactivated ventilation systems include Deep-Bed filter #1 and #3 filter housing, 291-AB, 291-AC, 291-AD, 291-AG, 291-AH, 291-AJ, 291-AK, and multiple 296-A stacks.

Other Buildings/Structures

Several other smaller buildings remain within the PUREX fence area. These buildings are generally classified as offices, instrument and equipment enclosures, or storage areas. These buildings are not expected to be accessed during the surveillance period and normally are either not contaminated or have only low-level fixed contamination. No significant hazards were identified for these buildings during the surveillance period.

Seismic Resistance

The major PUREX facility structures were built in accordance with 1952 UBC Zone 2 earthquake regulations. The ability of these structures to withstand seismic events was evaluated for development of the PUREX FSAR. The relevant information, for development of this BIO, from the FSAR evaluation is presented and discussed here.

In the seismic evaluation, two severities of seismic events were considered. The least severe was the Hanford Regional Historical Earthquake (HRHE). Peak ground acceleration produced by the HRHE at the PUREX site was determined as 0.1 g. The more severe seismic event was designated as a safe shutdown earthquake (SSE). Peak ground acceleration produced by the SSE is 0.25 g. The seismic evaluation results and conclusions are presented in Table 2-2.

Table 2-2. Seismic Analyses Summary.

Structure	HRHE	SSE
202-A building	Survives	Fails
ECMP	Fails	Fails
R Cell	Survives	Survives
202-A Annex	Survives	Fails
291-A filter cells, tunnels, and plenum	Survives	Survives
291-A fans and motors	Survives	Survives
291-A belt drives and metal ductings	Survives	Fails
291-A Stack	Survives	Fails
Utilities	Fails	Fails

The seismic evaluations (References 4 to 8) performed in support of PUREX operations and the FSAR development identify the structure resistance. In general, the key conclusions from these evaluations is identified in Table 2-2. However, it should be noted that these evaluations concluded that the cell cover blocks will not fail during the bounding seismic event. The resistance of the cover blocks, and the 202-A structure in general, help to limit the potential release of material from the canyon during a seismic event. The key structure element that fails, as noted in Table 2-2 is the east crane maintenance platform. These results are used in the evaluation of scenarios and consequence determination. Consistent with the requirements for the hazards classification of the facility, no credit is taken for any structures regardless of the seismic evaluation conclusions.

Based on this information, some of the key facility structures would be expected to survive an earthquake in the range of these magnitudes. However, for hazards categorization (Appendix A) and in the hazards analysis documents, no credit is taken for the survival of these systems in determining the material at risk. The likelihood of seismic events in these frequencies is illustrated in Figure A-1.

2.2.2 Utilities

With the exception of electric power and the 202-A HVAC system as described below, all utilities to the PUREX are isolated/blanked as described below:

- Steam - Isolated/Blanked to facility. The steam line is still active south of 202-A.
- Water - Isolated/Blanked within the PUREX compound but outside 202-A Building.
- Sewers - Capped/grouted at individual cell/room locations.

- Backup diesel generators and underground fuel supply tanks - Removed or deactivated.
- Liquid effluent lines - Capped/grouted/isolated as appropriate.
- Liquid transfer lines (product/waste) to Tank Farms - Isolated, by blanking, in canyon to prevent inadvertent transfers from Tank Farms.
- Electric - Isolated/disconnected with new system installed (see Section 3.2.1)
- HVAC/stacks - Isolated/capped except 291-A-1, main stack (see Section 3.2.2).

2.2.2.1 Electrical. The operational objectives of the utilities were used in the development of the PUREX S&M procedures. These objectives are:

1. Provide the necessary support to the HVAC and monitoring systems.
2. Minimize the potential for fire or electrical hazards in the utilities system.

All of the original plant power systems have been de-energized. Two electrical substations provide newly installed power systems to the PUREX facility during S&M. One station supplies 1,500 kVA of electrical power to the 292-AB Stack Monitoring Building, the 291-AE No. 4 Filter Building, the 291-A-1 Monitoring System, the operating canyon exhaust fan, and the SAMCONS I&C skid for surveillance and monitoring. The other station supplies 750 kVA electrical power to dedicated surveillance lighting throughout the facility. In addition, electric heat is provided to the 291-AE and 292-AB Buildings to protect instrumentation during cold weather. Cooling is provided to the 292-AB Building during warm weather to prevent the instrumentation from overheating. Figures 2-7 through 2-10 illustrate the key elements of the electrical system.

2.2.2.2 Ventilation System. With the exception of the active portions of the 202-A HVAC described here, all PUREX ventilation systems, including HEPAs and stacks, are capped/isolated to prevent unintended releases to the atmosphere. The description here is a brief summary of the information contained in WHC-SD-CP-CR-037, Rev. 1, *PUREX HVAC Consolidation Criteria Report*. This reference provides a detailed description of the HVAC system in the deactivated PUREX facility, for more information consult this reference.

At deactivation, the 202-A Building is ventilated by cascade systems into the canyon ventilation system. The U-Cell and R-Cell are ventilated through this system. Air flow for the S&M period is a nominal 40,000 cfm. As a result of this configuration, some doorways have been converted to flow paths, while other doorways are used to block the air flow. When using the doorways in the 202-A Building, workers will be instructed

Figure 2-7. Electrical System.

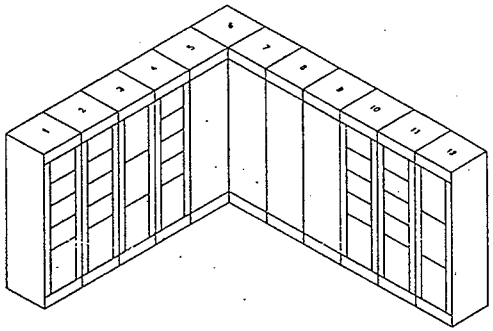

1C BLANK CONTACTOR	2C CANYON EXHAUST FAN 3	
1F CANYON EXHAUST FAN 1	2F CANYON EXHAUST FAN 2	

SUB STATION
2.4KV MOTOR STARTERS
(NOTE 2B)

	1	2	3	4	5	6	7	8	9	10	11	12
	BLDG 1 MCC		MCC LEFT							MCC RIGHT		
A	FUTURE 1B	FUTURE 2B	1B 480V #A & #C UNIT SUB STA DISTRIBUTION PANEL 100A 3D	FUTURE 4B	SOURCE: MCC XFMR T1 SWITCHGEAR BREAKER 2B			BUS TRANSITION STRUCTURE	SOURCE: MCC XFMR T2 MAIN SWITCHGEAR BREAKER 10B	FUTURE 10B	FUTURE 11B	TUNNEL DOOR 2 (FUTURE) 100A
B	FUTURE 1D	HVAC FEEDER #1 30A 2D		30A SPARE 4D						25A SPARE 10D	HVAC FEEDER #2 30A 11D	12D
C	FUTURE 1F	50A SPARE 2F		25A SPARE 4F						30A SPARE 10F	50A SPARE 11F	10A OTHER LOADS: CK 300A REFIFER 2 F-COIL VIEWING WINDOW 12H
D	FUTURE 1H	30A SPARE 2H	SAMCONS 100A 3H	TUNNEL EXHAUST FAN 25A (FUTURE) 4H						25A SPARE 10H	30A SPARE 11H	
E	252-AB BLDG 150A PANEL LEA 1M	291-AE HEATER 500KW (FUTURE) 600A 2M	252-AB BLDG 150A PANEL LA 3M	291-AE HEATER 500KW (FUTURE) 600A 4M	MAIN BREAKER NO.1 1200A 5M	CORNER	TIE BREAKER 1200A 7M		MAIN BREAKER NO.2 1200A 9M	291-AE HEATER 500KW (FUTURE) 600A 10M	291-AE BLDG PANEL B 300A 11M	300A SPARE 12M
N												

SUB STATION
MOTOR CONTROL CENTER
ARRANGEMENT

	1	2	3	4	5	6	7	8	9	10	11
A	SPARE BREAKER	SPARE BREAKER	FUTURE BREAKER	FAN #1 BREAKER MOTOR STARTER 1F	SOURCE: 13.8KV LINE C8L6 PRIMARY XFMR C6705E MAIN #1 BREAKER	MAIN BUS #1 PT S	45 KVA CPT PRIMARY FUSE (FUTURE)	SOURCE: 13.8KV LINE C8L8 PRIMARY XFMR C6706E MAIN #2 BREAKER	SPARE BREAKER	SPARE BREAKER	FAN #2 BREAKER MOTOR STARTER 2F
B	MINI SUB BREAKER PRIMARY FEEDER #1	MCC LEFT BREAKER TRANSFORMER T1	BLANK	BLANK	LINE #1 PT S	TIE BREAKER	MAIN BUS #2 PT S	LINE #2 PT S	MINI SUB BREAKER ALTERNATE FEEDER #2	MCC RIGHT BREAKER TRANSFORMER T2	FAN #3 BREAKER MOTOR STARTER 2C

SUB STATION
SWITCHGEAR
(NOTE 2A)

10. MAIN SWITCHGEAR 5 KV TIE BREAKER:
TIE WILL NOT CLOSE IF BOTH MAIN #1 & MAIN #2 ARE CLOSED. TIE IS ELECTRICALLY INTERLOCKED TO PREVENT PARALLELING INCOMING 13.8KV FEEDERS C8L6 & C8L8 IF INTERLOCK REMOVED, CALL UTILITIES PRIOR TO CLOSING TIE AND PARALLELING INCOMING FEEDERS C8L6 & C8L8.

11. BLDG 1 MCC:
CUBICLE 7W 480V TIE BREAKER:
TIE MUST NOT BE CLOSED IF BOTH MAIN #1 & MAIN #2 ARE CLOSED. TIE IS LOCKED OUT TO PREVENT PARALLELING INCOMING 13.8KV FEEDERS C8L6 & C8L8 IF LOCK REMOVED, CALL UTILITIES DISPATCHER PRIOR TO CLOSING TIE AND REQUEST UTILITIES PERMISSION PRIOR TO PARALLELING INCOMING FEEDERS C8L6 & C8L8 THROUGH THE TIE BREAKER.

12. BLDG 2 WLI 5KV SWITCH:
WLI SWITCH FEEDER #1 IS MINISUB BREAKER 2B MAIN SWITCHGEAR OR WLI SWITCH FEEDER #2 IS MINISUB BREAKER 9B MAIN SWITCHGEAR. NOTE: "WLI SWITCH IS NONLOAD BREAK. USE MAIN SWITCHGEAR FOR ISOLATION."

13. FOR MAIN 5KV SUBSTATION MODULE DRAWINGS REFERENCE:
PROTECT CONTROLS, INC. 5KV SUBSTATION VENDOR DRAWINGS:
D-6508-100, D6508-200, D6508-500,
D-6508-700, D6508-800, D6508-801,
D-6508-900, D6508-901, D6508-1000

14. FOR MAIN 5KV SUBSTATION HVAC DRAWINGS REFERENCE:
PROTECT CONTROLS, INC. SUBSTATION VENDOR DRAWINGS:
D-6508-1200, D6508-1300, D6508-1400,
D-6508-1900, D6508-2000, D6508-2100

15. FOR MAIN 5KV STATION FIRE SYSTEM DRAWINGS REFERENCE:
WILSON FIRE EQUIPMENT & SERVICE COVENDOR DRAWINGS:
2187-1, 2187-2, 2187-3, 2187-4, 2187-5, 2187-6 & 2187-7.

16. ALL BREAKERS HAVE LOCAL CLOSE/TRIP SWITCHES. ALL MOTOR STARTERS HAVE LOCAL START/STOP PUSHBUTTONS (NON ILLUMINATED).

NOTES

1. THE INTERFACE POINT BETWEEN ELECTRIC UTILITIES AND THE FACILITY IS THE INCOMING LINE TERMINATION TO THE ELECTRICAL ISOLATION DEVICE AT THE FACILITY PER WHC-B-7 SECT 724. CONTACT ELECTRICAL UTILITIES DISPATCHER FOR SWITCHING & SAFEOUT OF 13.8KV LINES C8L6 & C8L8 & FOR CHOSING TIE BREAKERS TO PARALLEL FEEDERS @ 2400V & 480V LEVELS.

2. A. SWITCHGEAR – 5KV
LINE UP OF SWITCHGEAR – 5KV BREAKERS W/125VDC CONTROL POWER.

B. MCC – 5KV
LINE UP OF 5KV MCC STARTERS FOR CANYON EXHAUST FANS 1, 2, 3.

SET UP

3. MULTILIN SR 750/P RELAY FEATURES WILL INCLUDE:

PROTECTION	ANSI
PHASE & GROUND TIME OVERCURRENT	51
PHASE & GROUND LOSET OVERCURRENT	50
PHASE & GROUND HISET OVERCURRENT	50
PHASE & GROUND DIRECTIONAL CONTROL	67/67N
UNDERVOLTAGE – TWO INDEPENDENT STAGES	27
OVERVOLTAGE – TWO INDEPENDENT STAGES	59
UNDERFREQUENCY – TWO INDEPENDENT STAGES	81u/O
MANUAL CLOSE CONTROL	
COLD LOAD PICKUP CONTROL	
MONITORING	
PHASE & GROUND CURRENT LEVEL	
OVERFREQUENCY	
BREAKER FAILURE	
VT FAILURE	
POWER FACTOR – TWO INDEPENDENT STAGES	55
DEMAND – Ia, Ib, Ic, MW, Mvar, MVA	
ANALOG INPUT – TWO INDEPENDENT STAGES	
TOTAL BREAKER ARCING CURRENT – PER-PHASE	
TRIP COUNTER	
REAL TIME CLOCK	
EVENT RECORDER – SAVES LAST 40 EVENTS	
TRACE MEMORY – 16 CYCLES, 9 CHANNELS	
20 FRONT PANEL LED INDICATORS	
METERING	
V, I, Hz, W, Var, VA, PF, DEMAND ENERGY	
COMMUNICATIONS	
RS485/RS422 SERIAL PORT	
FRONT PANEL RS232 PROGRAM PORT	

4. WESTINGHOUSE IQ-1000 II MOTOR PROTECTION RELAY (MR) FEATURES INCLUDE:

PROTECTION FEATURES	ANSI
UNDERCURRENT/MINIMUM LOAD	37
MOTOR/LOAD BEARING OVERTEMPERATURE	38
UNBALANCE	46
MULTIPLE STARTS	66
STATOR WINDING OVERTEMPERATURE	49
PHASE SHORT CIRCUIT	50
TIMED OVERLOAD/LOCKED ROTOR CURRENT	51
GROUND FAULT INSTANTANEOUS	50G/50N
GROUND FAULT OVERCURRENT	51G/51N
ALARM RELAY	74

5. VOLTS PHASE SEQUENCE PROTECTION — ANSI 47 – PROVIDED BY BASLER BE1-47N RELAY

6. DIRECTIONAL POWER — ANSI 32 – PROVIDED BY BASLER BE1-32R RELAY

7. TRIP RELAY — ANSI 86 – PROVIDED FOR EACH BREAKER

8. WATT HOUR METER (WHM) SCIENTIFIC COLUMBUS, JEM1 MODEL 312

9. CUTLER HAMMER D300 SERIES PLC PROVIDES ELECTRICAL SYSTEM CONTROL AND DATA MONITORING INTERFACE W/SAMCONS LAN REMOTE CONTROL AND DATA GATHERING NETWORK. REMOTE CLOSE/TRIP OF BREAKERS IS AVAILABLE THROUGH PLC. REMOTE START/STOP OF MOTOR STARTERS FOR CANYON EXHAUST FANS IS AVAILABLE THROUGH PLC/SAMCONS CONTROL SYSTEM.

ESSENTIAL DRAWING

DWG NO	TITLE
H-2-821852	PROCUREMENT DRAWING

DRAWING TRACEABILITY LIST

REF NUMBER	TITLE
H-2-821865	ELECT CABLE TIE-INS
H-2-821860	PUREX PWR & LIGHTING
H-2-821854	ELECT PARTIAL SITE DEMO
H-2-821855	ELECT PARTIAL SITE DEMO
H-2-76783	ELECT ELEV SECT & PNLBD
H-2-821864	CABLE TIE-INS UNIT SUBSTA
H-2-821857	13.8KV OVHD UTIL SERV LOOP

REFERENCES

NEXT USED ON END ITEM

CADFILE 821853A

REVISIONS

CADCODE WN95ACD2.12.0:SS

U.S. DEPARTMENT OF ENERGY
Richland Operations Office
B&W Hanford Co.

UNIT STATION
ARRANGEMENT

U S

CODE	SIZE	DWG NO	REV
81	203-A 252-AB	7901 7902	H-2-821853 0

SCALE NONE | SHT 620036 | SHEET 1 OF 4

2 - PLOT SCALE: 1=1

2-19/2-20

Figure 2-8. Electrical System.

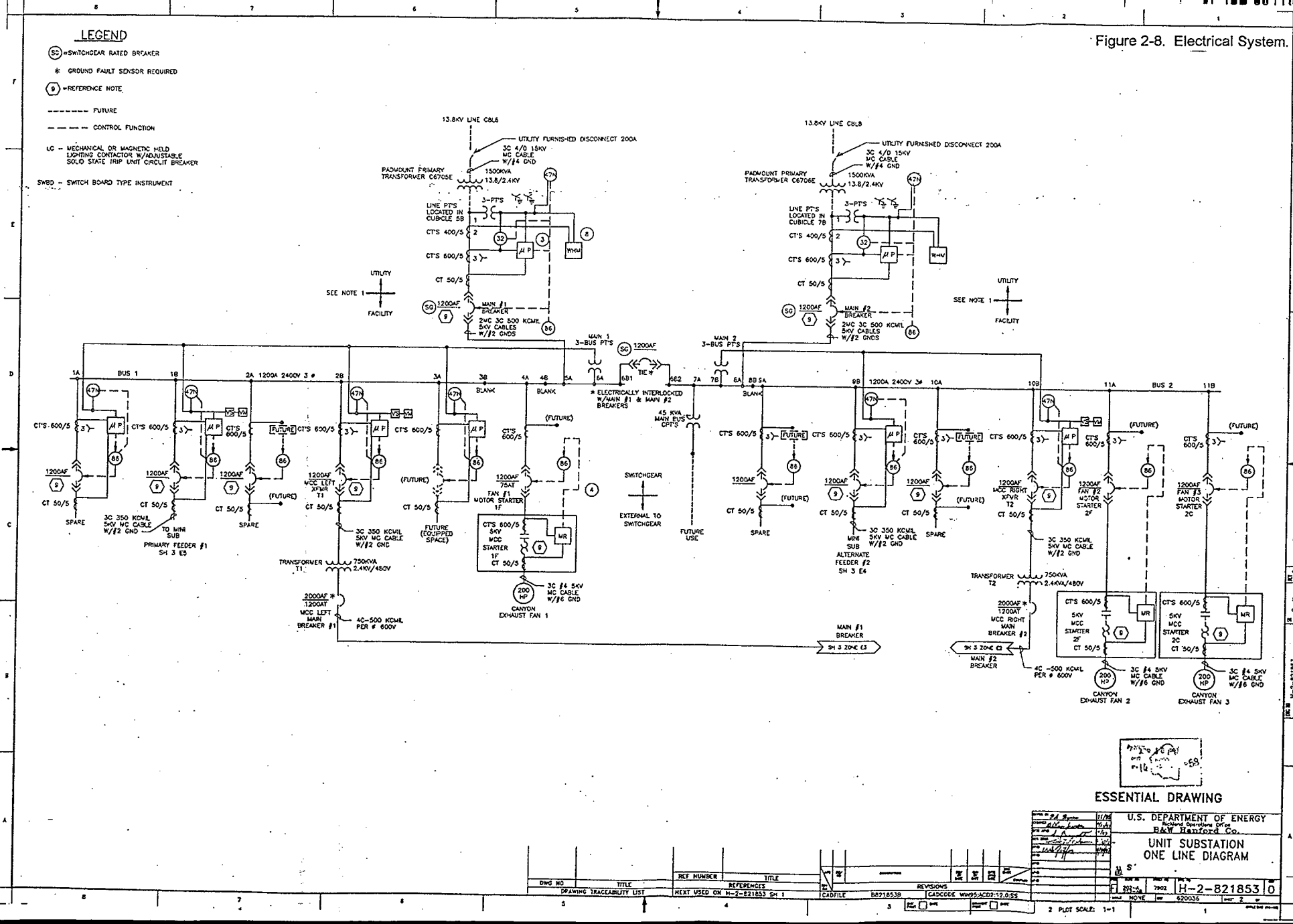

Figure 2-9. Electrical System.

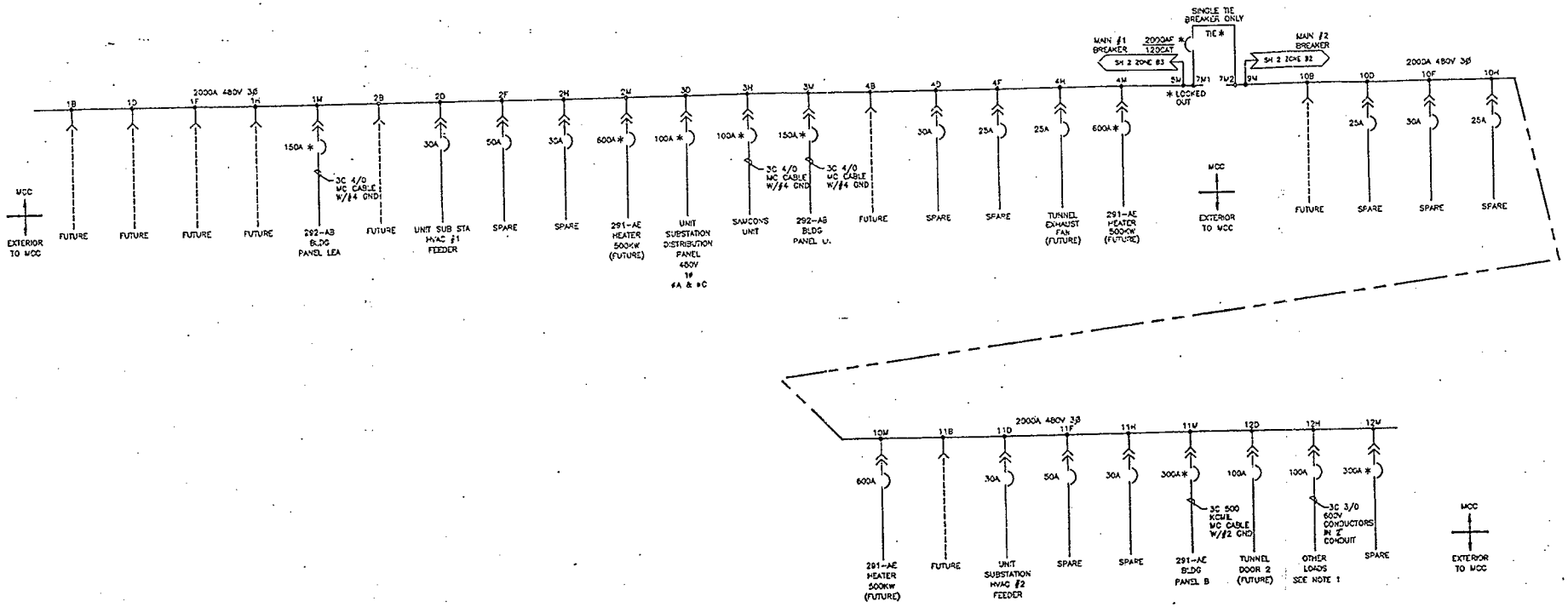

NOTE:

1. F CELL VIEWING WINDOW 291 AB, PANELBOARD "DA", 302 A CATOX TANK LEVEL PROBE CATHODIC PROTECTION RECTIFIER #2

ESSENTIAL DRAWING

U.S. DEPARTMENT OF ENERGY
DOE Field Office, Richland
Westinghouse Hanford Company

UNIT SUBSTATION
AS ONE LINE DIAGRAM

F | 202-A 202-AB | 7902 | H-2-821853 | 0

SCALE NONE | DWG 620036

DWG NO | TITLE | REF NUMBER | TITLE | REFERENCES
DRAWING TRACEABILITY LIST | NEXT USED ON

REVISIONS

CADFILE B821853X | CADCODE DOS-6 22:AC02-12:55

H-2-821853

MINI SUB-STATION LIGHTING PANEL

PANELBOARD MSLP LOCATION MINSUB VOLTS 120/240 1ø 3 WIRE
NEMA TYPE 3R ☒ MAIN BKR 225 AMP BUS ☐ PANELBOARD GROUND FAULT PROTECTION
☒ SURFACE MOUNTED ☐ LUGS ONLY AMP NEUT
☐ FLUSH MOUNTED ☐ TOP ☐ BOT ☐ GROUND BUS ☐ OTHER

SERVICE	AMPS	NO.	A (225A)	B	NO.	AMPS	SERVICE
INTERIOR LIGHTING/EXIT LTS 2	2A	1	20A	20A	2	3A	EXTERIOR GFCI RCPT
GFCI INTERIOR RCPT	6A	3	20A	20A	4	4A	WLI HEATERS (5KV SWITCH)
EXTERIOR LTS	5A	5	20A	20A	6	2A	750KVA TRANSFORMER (TEMP. MONITOR)
SPARE		7	20A	20A	8	2A	CONTROL CIRCUIT
SPARE		9	20A	20A	10		SPARE
SPARE		11			12		SPARE
TOTAL A	13A					11A	

CUTLER-HAMMER MINI-POWER CENTER P.N. P4BG11505P 5KVA 480-240/120V 1ø 3 WIRE W/BREAKER PRI-MAIN EHD 2020 & BR225A SEC-MAIN W/12-1P/20A BREAKERS.

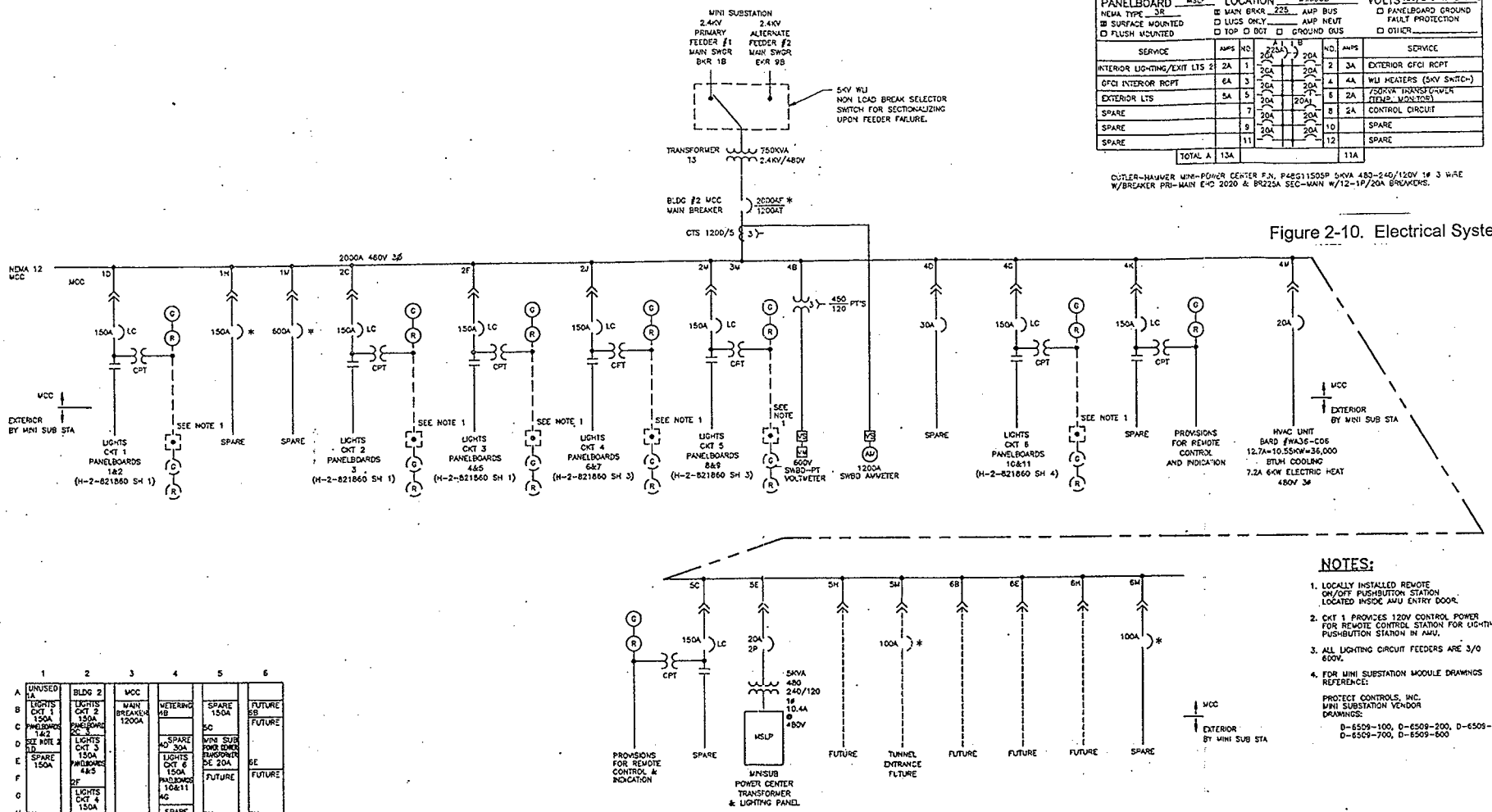

Figure 2-10. Electrical System.

NOTES:

1. LOCALLY INSTALLED REMOTE ON/OFF PUSHBUTTON STATION LOCATED INSIDE AMU ENTRY DOOR.
2. CKT 1 PROVIDES 120V CONTROL POWER FOR REMOTE CONTROL STATION FOR LIGHTING PUSHBUTTON STATION IN AMU.
3. ALL LIGHTING CIRCUIT FEEDERS ARE 3/0 600V.
4. FOR MINI SUBSTATION MODULE DRAWINGS REFERENCE:

   PROTECT CONTROLS, INC. MINI SUBSTATION VENDOR DRAWINGS:

   D-6509-100, D-6509-200, D-6509-600, D-6509-700, D-6509-800

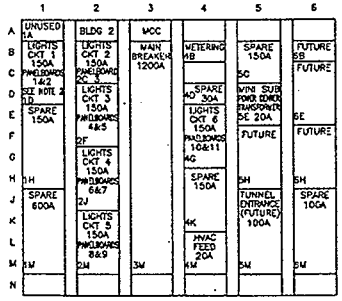

MINI SUB-STATION
MOTOR CONTROL CENTER

ESSENTIAL DRAWING

U.S. DEPARTMENT OF ENERGY
Richland Operations Office
B&W Hanford Co.

MINI SUBSTATION
ONE LINE DIAGRAM

M S

H-2-821853 0

2-25/2-26

DRAWING TRACEABILITY LIST

DWG NO	TITLE	REF NUMBER	TITLE
		NEXT USED ON H-2-821853 SH 1	

REFERENCES

REVISIONS

CADFILE B8218530 CADCODE WIN95:ACD2:12.0:SS

2 PLOT SCALE: 1=1

balance. Figure 2-12 is a flow diagram of this system. The location of the PUREX ventilation stacks is illustrated in Figure 2-11. Figure 2-13 illustrates the consolidated HVAC flow schematic and Figure 2-14 illustrates the PUREX final filter configuration.

Two 200-Hp backup canyon exhaust fans are available to provide reliable ventilation. The single operating fan is powered by an electrical substation. Mechanical or power failure of the operating canyon exhaust fan will be detected by the monitoring unit and will activate operation of the backup fan.

The major portions of the 202-A HVAC that will remain active are the #2 Deep-Bed filter, HEPA filters in the 291-AE Building, 291-A electric exhaust fans, 291-A-1 stack, air tunnels, 292-AB Building, and sampling instrumentation.

An 8-ft-wide by 8-ft-high reinforced concrete exhaust air duct connects the 202-A Building to the #2 Deep-Bed filter located in the south yard area and is comprised of below grade concrete exhaust air treatment and discharge facilities. The overall dimensions of the filter area are 82 ft by 52 ft by 13 ft deep.

The #2 Deep-Bed filter was designed to remove 99.9% of the particulates from the air stream. The filter area has two glass-fiber bed sections: the prefilter and the cleanup filter. The prefilter bed consists of five separate layers, each packed with a different density of fiberglass. The cleanup filter beds consist of 132 1-in.-thick Deep-Bed filter units.

The 291-AE (Fourth Filter) Building is a 123-ft by 41-ft by 17-ft-high reinforced concrete building, which houses 10 modular filter units, each with upstream and downstream isolation dampers. A typical modular filter unit consists of a stainless steel housing containing an inlet damper, an in-place-filter testing assembly, a 4 by 3 array of HEPA filters, an in-place-filter testing assembly, and an outlet damper. At deactivation, five filters arrays will be operational, with the remainder expected to be kept in reserve. There are two reinforced concrete air ducts located below 291-AE, parallel to each other and running in the north-south direction. The west duct is an inlet air duct connected to the underground air duct for the #2 filter. The east duct is the discharge air duct from the HEPA filter units and connects with the aboveground reinforced concrete exhaust air plenum. Attached to the south side of the building is a 24-ft by 12-ft by 9-ft-high metal building, which houses the mechanical and electrical equipment and is the entrance vestibule for the 291-AE Building.

The 291-A exhaust plenum and fan area consists of an underground air duct connected to the 291-AE discharge air duct and an aboveground segment that houses three electric motor driven ventilation fan units. The walls and floor are constructed of reinforced concrete. The 2.4 kV motor driven fans are located on the south side of the aboveground plenum segment.

Figure 2-11. PUREX Ventilation Stack Locations.

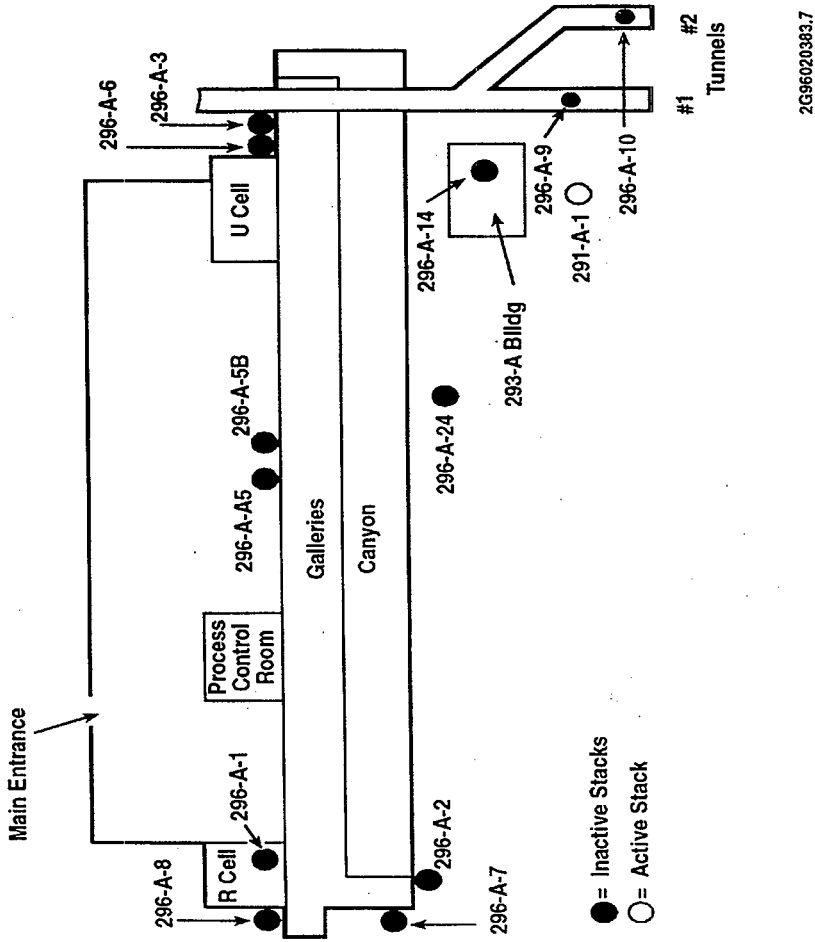

Figure 2-12. PUREX HVAC Consolidation Flow Diagram.

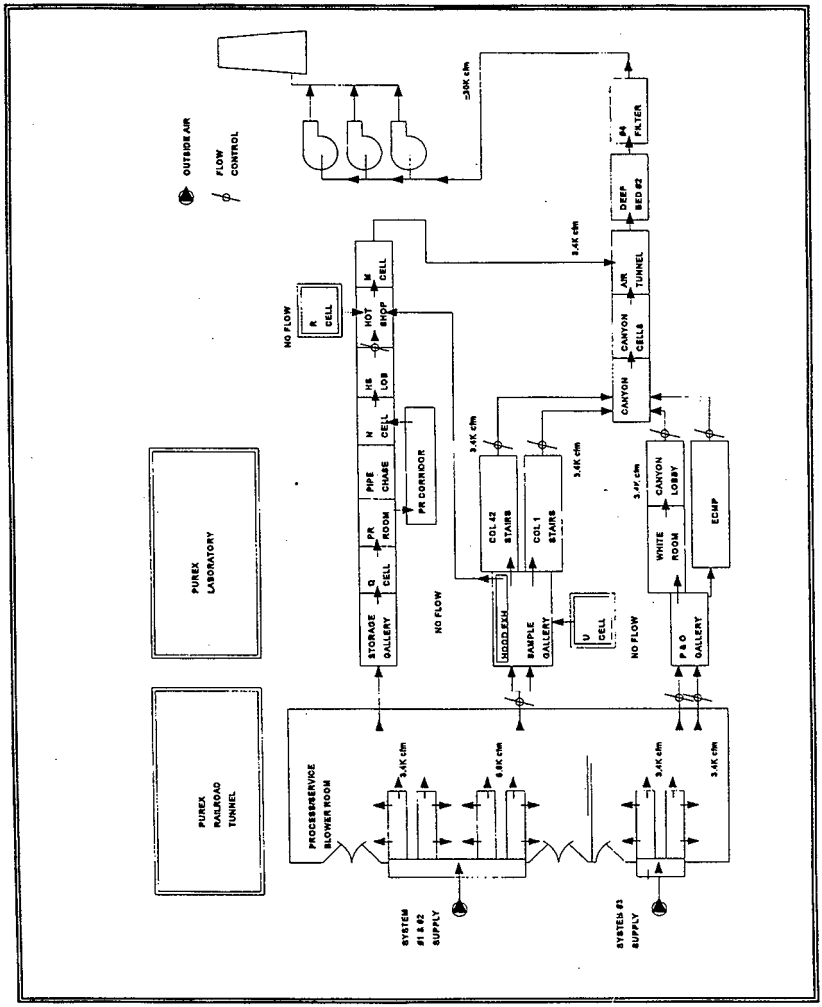

Figure 2-13. PUREX HVAC Consolidation Flow Schematic.

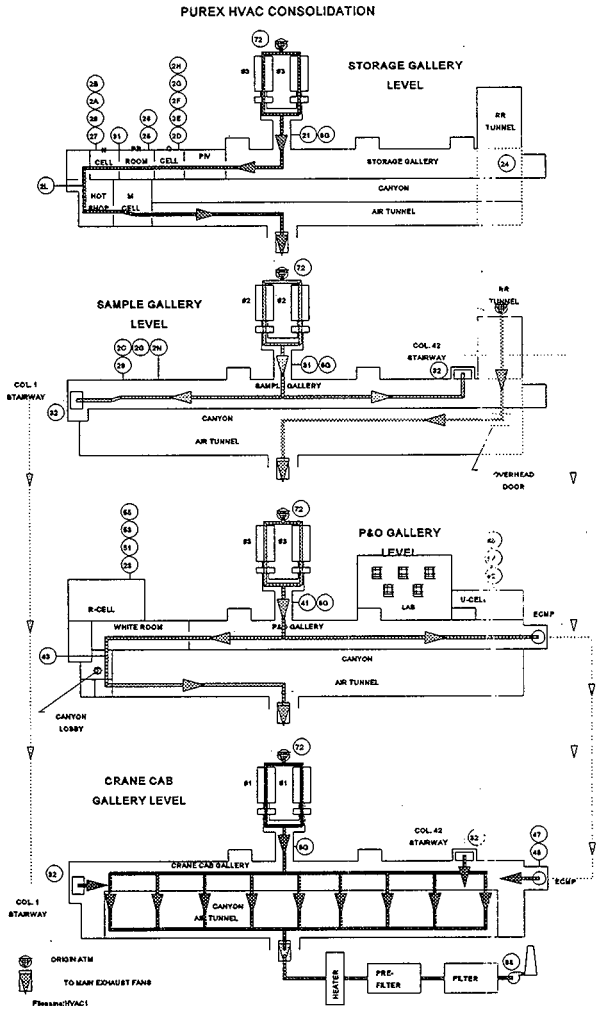

Figure 2-14. PUREX Final Filter Configuration.

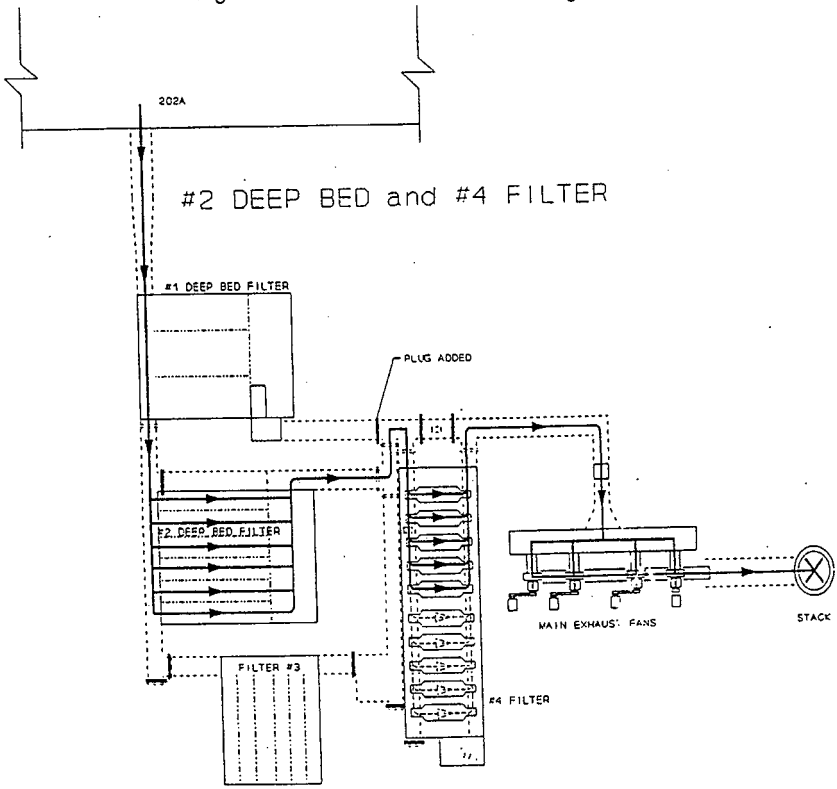

The 291-A-1 Main Stack is of reinforced concrete construction and rises 200 ft above grade. The stack has a free-standing, 7-ft inner diameter, stainless steel liner. The top of the stack is covered to protect the annulus between the stack and the liner.

The 292-AB Building is a 35-ft by 20-ft by 25-ft-high two-story metal building. The second floor is constructed on metal grate with a metal plate over approximately 80% of the floor area. The building is an enclosure for stack sampling equipment.

2.2.2.3 SAMCONS System. A SAMCONS I&C skid unit, located south of the 202-A Building, serves as the main data acquisition center for monitoring data (see Figures 2-15 through 2-21). This unit will monitor and control the following items:

- Air flow throughout the major air paths and four differential pressures to determine correct pressure gradients maintaining a nominal total flow rate of 40,000 cfm.
- Temperature measurements for the canyon exhaust fans bearings, air tunnel, and the fourth filter building.
- Liquid levels from the 216-A-2 (main stack condensate) and #2 filter condensate radioactive liquid catch tanks resulting from stack condensate.
- Humidity and dew point of the air in the air tunnel to detect liquid accumulation on the HEPA filters.
- The main stack alpha and beta particulate measurements.
- The condition and status of the main switchgear and motor control centers. This includes primary and secondary transformer voltages, currents, and phase relationships.

Data acquired by the SAMCONS unit then will be transmitted to a remote data acquisition and control (REDAC) station, to be located at the 271-U Facility in the 200 West Area. The REDAC station will receive the flow of data and provide the appropriate operation control.

2.2.3 Hazards

The PUREX transition project used the end point criteria process to determine the necessary deactivation activities and the appropriate level for material removal. This process is based upon the access to the given facility area, and the hazard that the material presents to the worker, public, and the environment. Using this process, a comprehensive facility characterization for determination of the final material was not performed. This was consistent with the ALARA principles, and was further justified since the information was not necessary for the hazards analysis process. However, a

Figure 2-15. SAMCONS System.

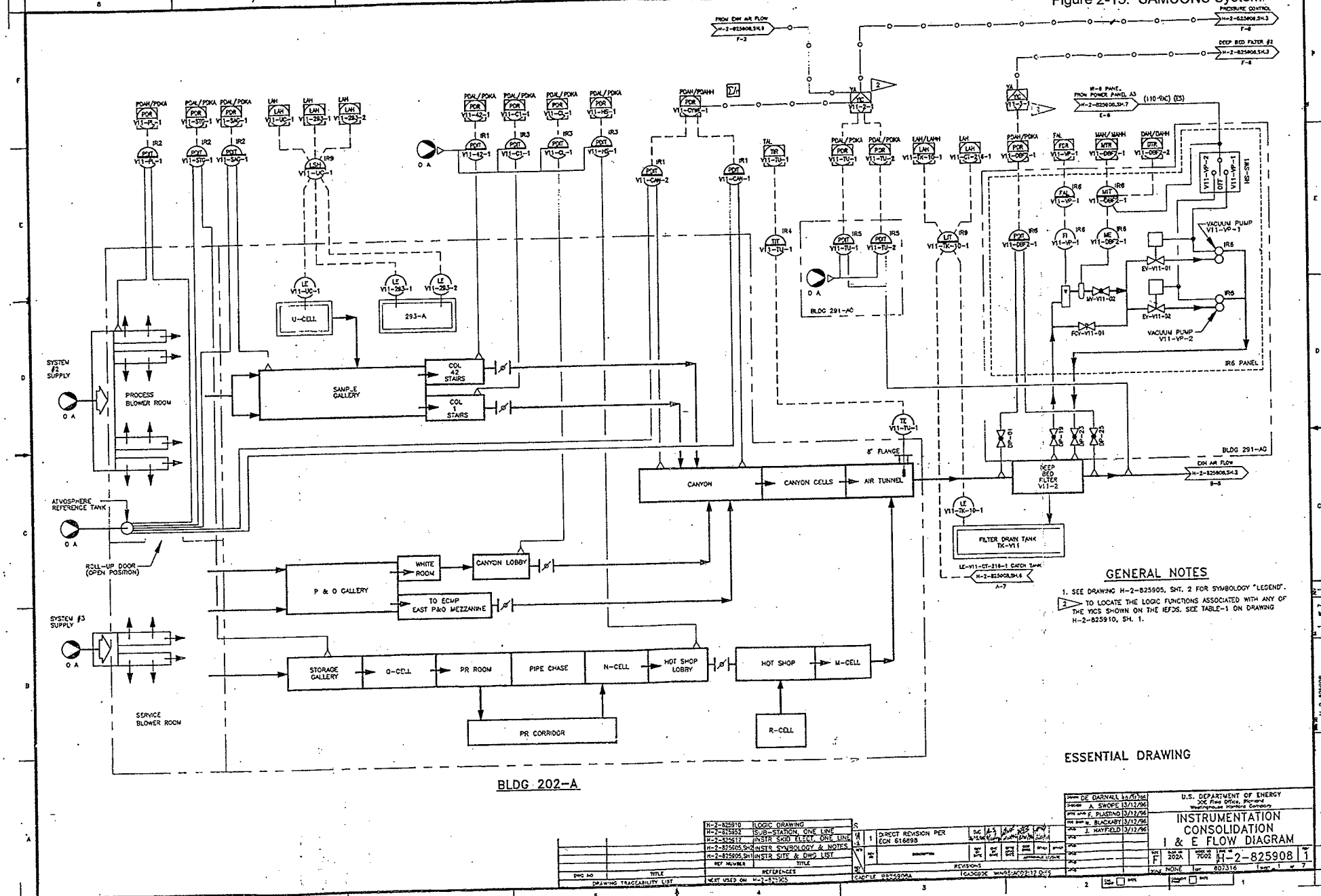

Figure 2-16. SAMCONS System

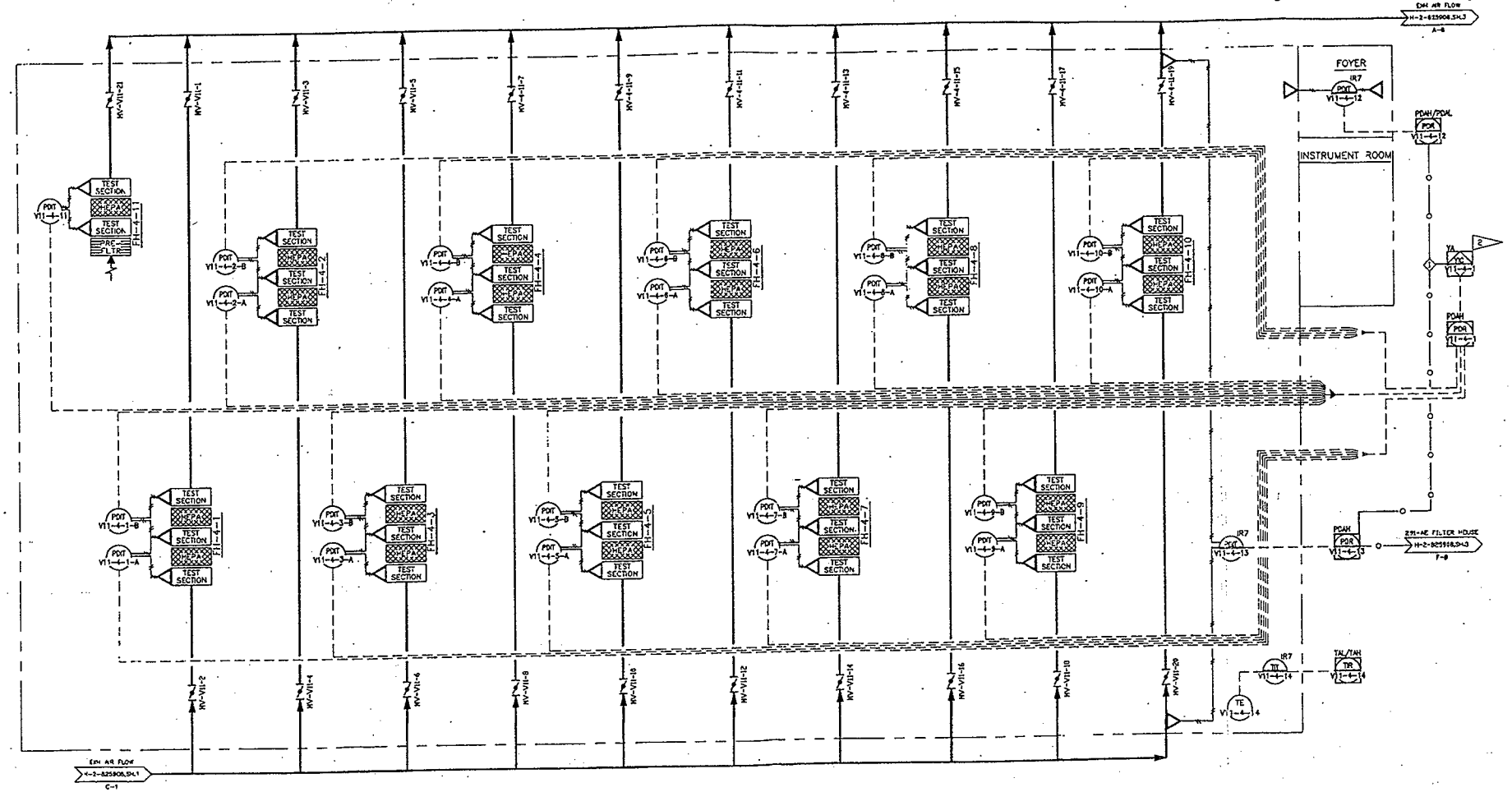

BLDG 291-AE

ESSENTIAL DRAWING

DRAWN	DOE DARVELL	11/27/95	U.S. DEPARTMENT OF ENERGY DOE Field Office, Richland Westinghouse Hanford Company
CHECKED	A. SHOPE	3/12/96	
DATA ENTRY	F. PLASTINO	3/12/96	INSTRUMENTATION CONSOLIDATION FILTER HOUSE NO. 4
CAD ENTRY	W. BLACKABY	3/12/96	
APPROVED	J. HAYFIELD	3/12/96	

SIZE	DWG NO	SHEET	REV
F	291-AE 7002	H-2-825908	1

NONE | Ref 607316 | Sheet 2 of

REV NO	DESCRIPTION	DATE
1	DIRECT REVISION PER ECN 616898	8/15/94

REVISIONS

CADFILE SAMCONS | ICADCODE WINGS:ACD2:12 0:55

DWG NO	TITLE	REF NUMBER	TITLE
		REFERENCES	
		NEXT USED ON	

DRAWING TRACEABILITY LIST

H-2-825908

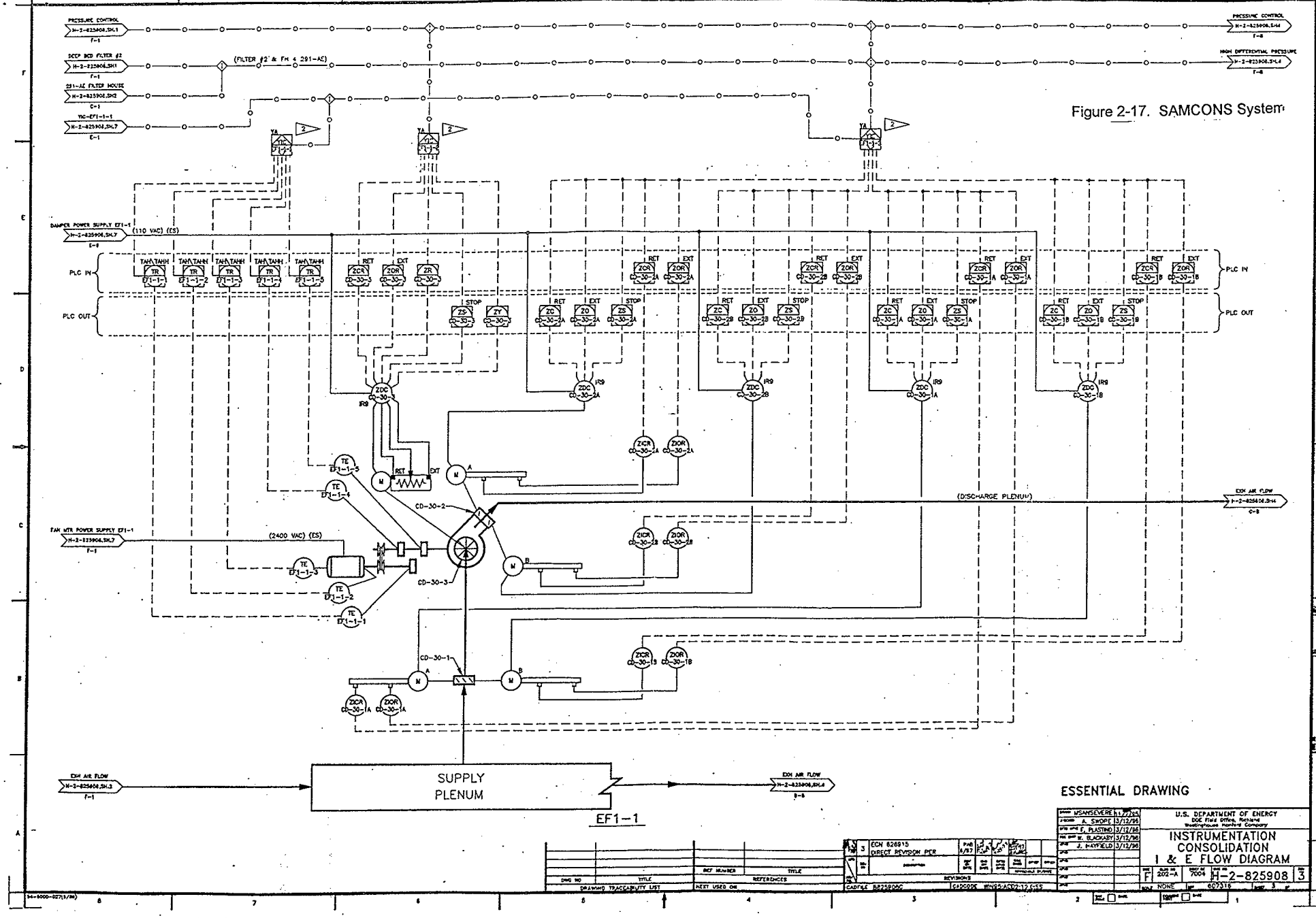

Figure 2-17. SAMCONS System

Figure 2-18. SAMCONS System

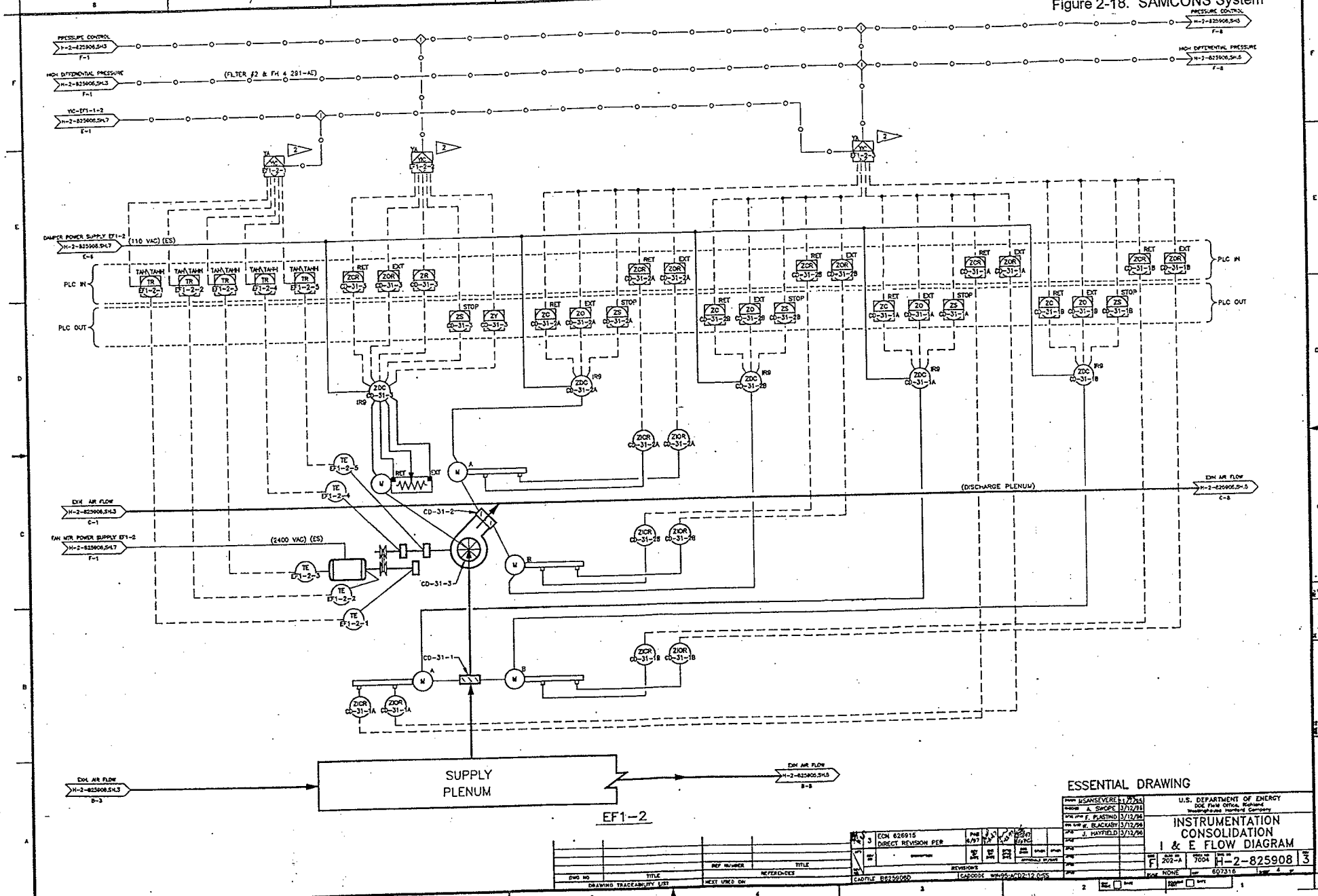

Figure 2-19. SAMCONS System.

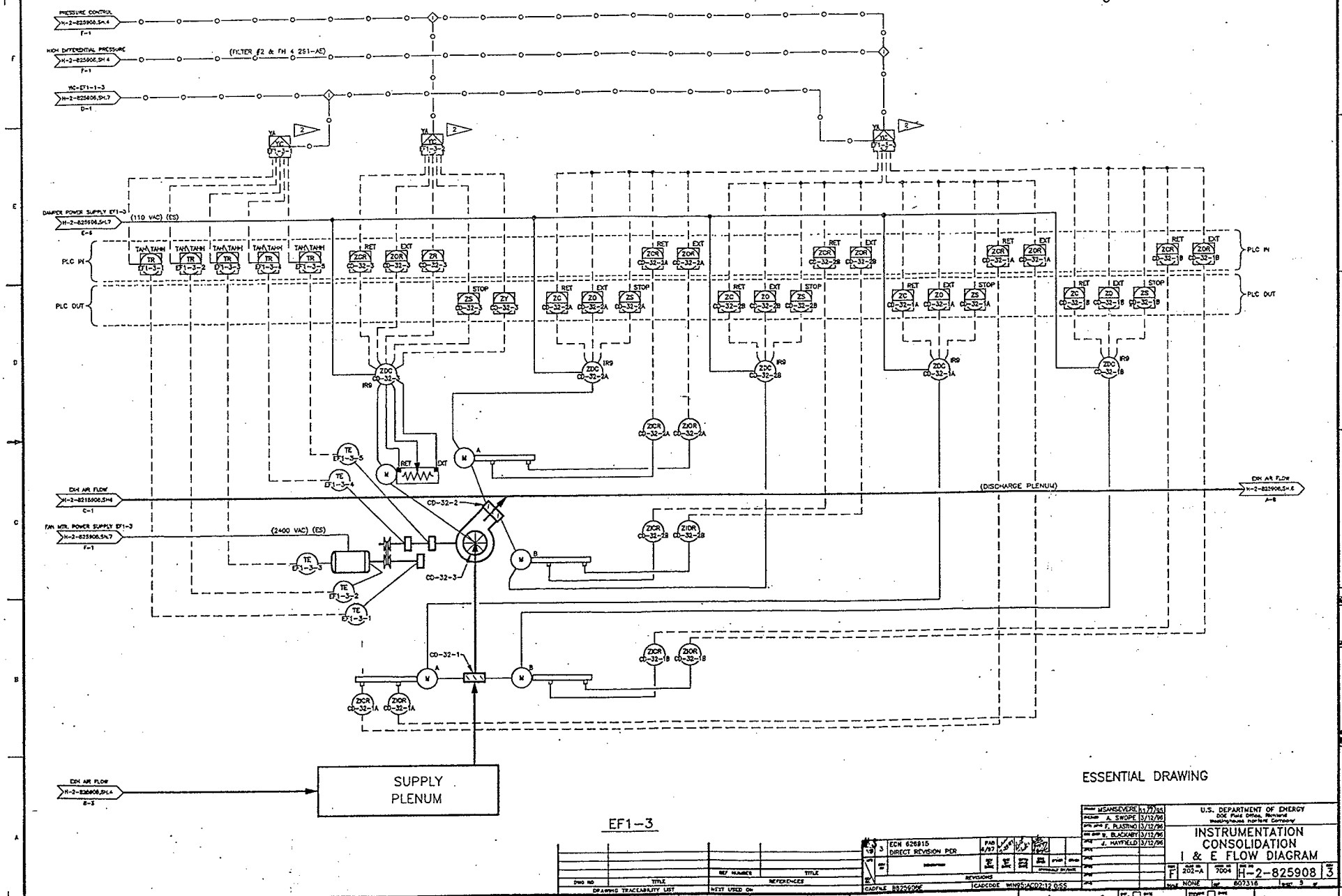

Figure 2-20. SAMCONS System.

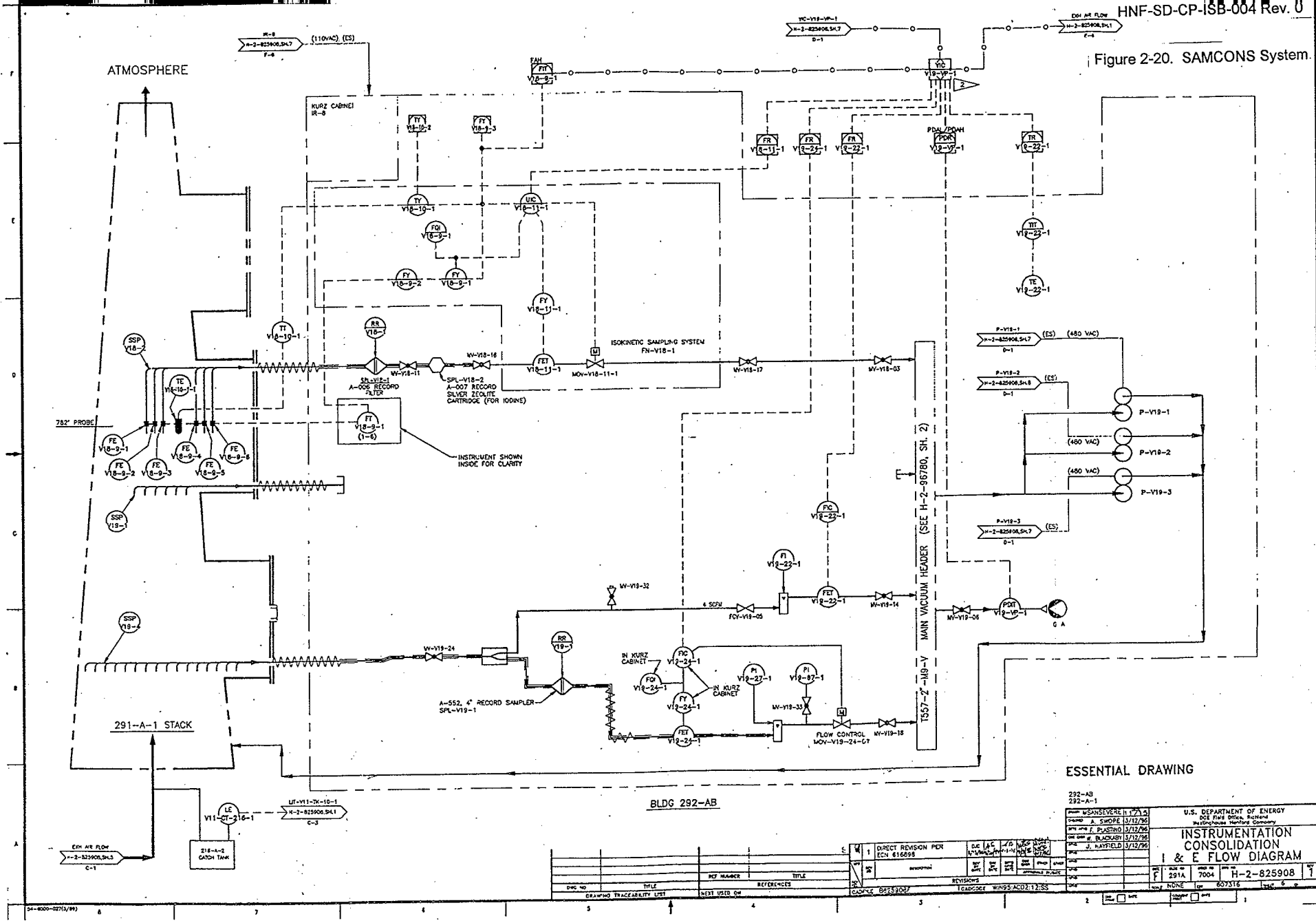

Figure 2-21. SAMCONS System

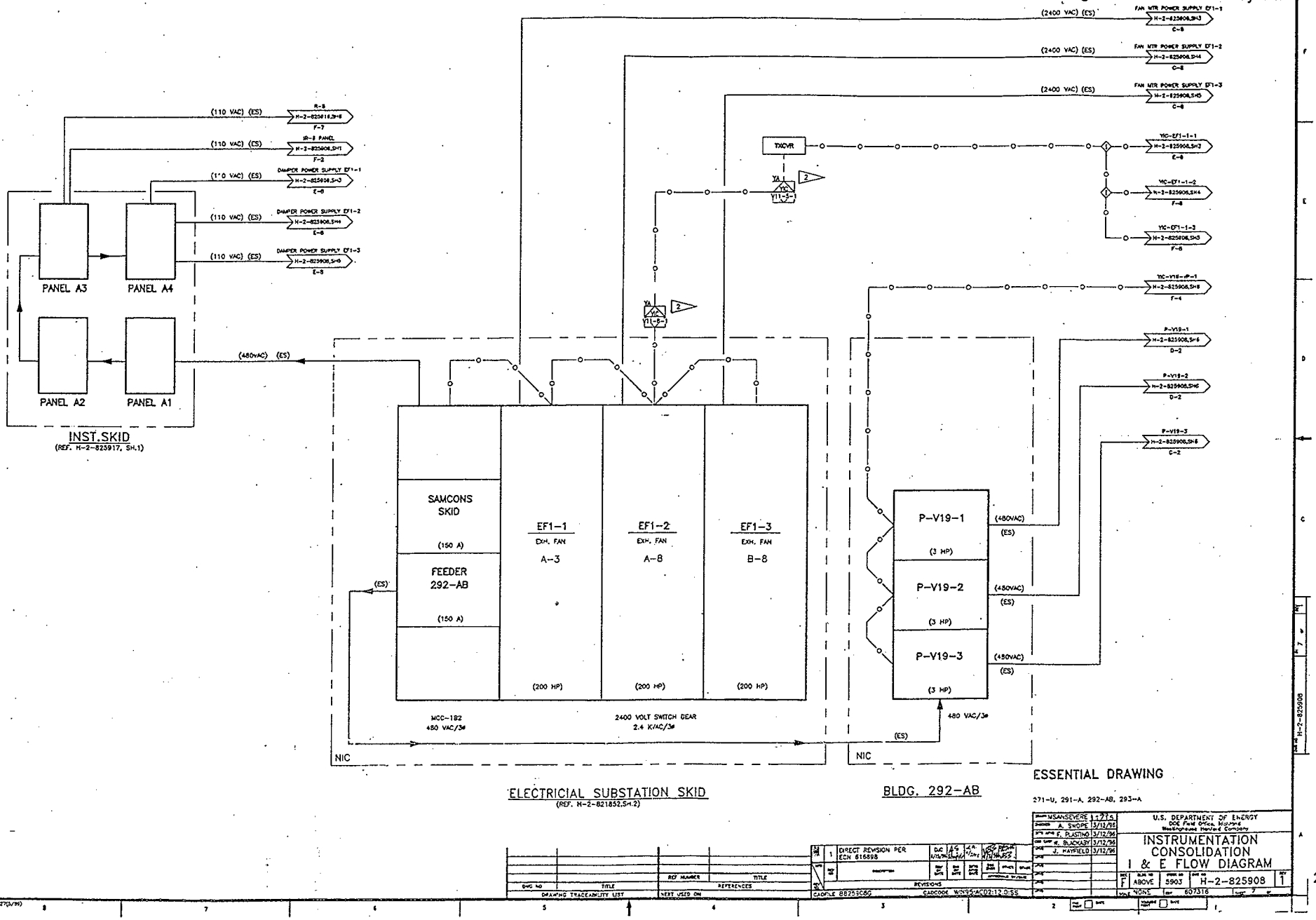

conservative estimate of the final inventory was performed and the results summarized in this document.

2.2.3.1 Non-Radiological Hazardous Material. The PUREX deactivation project removed, reduced, or stabilized the hazardous chemicals and waste within the PUREX facility. All bulk chemicals were removed; only isolated residual quantities are present. These residuals are in the heels left in chemical and process tanks and isolated dead-end legs of piping and dry residual material resulting from spills and leaks. The hazards associated with these chemicals are minimal as tanks and vessels have been drained and flushed until the samples meet the criteria specified in WHC-SD-WM-0053, Rev. 1. Hazardous residual from spills or leaks is primarily found as dried salts or captured in cell debris or sludge and is normally assumed, based on post-operating experience, to be non-reactive and not readily mobile. Tanks have been flushed to meet RCRA standards.

Additional non-radiological evaluation included a physical inspection of the configuration of the systems, where possible, by a team of knowledgeable individuals. Also a review was performed of deactivation documentation including procedures, work plans, occurrence reports, end point files, engineering reports, and logbooks. The following conclusions were reached:

1. No immediate or long term hazards have been identified.

2. All systems which formerly contained potentially reactive chemicals/materials have been drained and flushed and currently contain unmeasurable residuals.

3. Approximately 371 cubic feet of berl saddle packing coated with about 375 pounds of silver nitrate are in the three silver reactors located in A, B, and C cells.

From this evaluation it was determined that no corrective actions were warranted. In addition, in response to recent incidents at the Hanford Site, another review of chemical residuals was completed. This evaluation was documented in "Review of Potentially Reactive Chemicals Report," June 23, 1997. There were no inadequacies or corrective actions identified for the PUREX facility.

2.2.3.2 Radiological Hazardous Material. The PUREX deactivation project removed, reduced, or stabilized the major radioactive sources and waste within the PUREX facility. Radiological contamination throughout PUREX consists of uranium, transuranics, and/or mixed fission products. The radioactive material inventory remaining at the end of deactivation is primarily in the form of contaminated equipment and surfaces, dust, debris, sludge, with some remaining Pu and oxide dust stabilized in gloveboxes.

Five areas were identified as containing significant quantities of Pu: L-Cell, which is estimated to contain between 3 and 4 Kg of Pu in stable, immobile sludge on the floor; Deep-Bed filters #1 and #2, each containing 100-200 g of Pu; N-Cell/PR Room, which contains 2-3 Kg of Pu material in gloveboxes; and the E cell skip which contains approximately 400 g of plutonium; and the white room with 50-500 g of Pu.

As part of the hazards assessment and categorization process, an estimate of the total remaining radioactive material within the PUREX facility was performed. This estimate was based on process knowledge, experience, and the best available data. The high end estimates are considered conservative and bounding based on the data available. The estimated values by major area of the facility are presented in Table 2-3. A more detailed breakdown is provided in Table B-2 and Table B-3, in Appendix B.

With the exception of the white room, N-Cell, and PR room, the majority of the radiological material identified in these tables do not have routine personnel access. Release of radioactive material from these areas is addressed in the analysis of seismic and loss of ventilation events. Documentation of the radiological conditions at completion of the deactivation project is identified in the radiological summary document.

Table 2-3. PUREX Radiological Inventory Estimates.[1]

Location	Measurable Pu (grams)	Estimated Pu (grams)	Estimated Fission Products (Ci)
Canyon (includes L cell)	4,296	930 - 4,800	200 - 500
White Room	N/A	50 - 500	0
N Cell	1,643	N/A	0
Product Removal Room	1,199	N/A	0
Deep Bed Filters	N/A	200 - 400	80 - 800
TOTALS	7,138	1,180 - 5,700	280 - 1,300

[1]Reference HNF-2545, Rev. 0, *Plutonium-Uranium Extraction Facility (PUREX) Plutonium and Fission Product Residual Estimates*, and HNF-SD-CP-HIE-004, *PUREX Deactivated End-State Hazards Analysis.*

2.2.3.3 Energy Sources. The deactivation project removed existing energy sources and disconnected PUREX utilities (e.g., steam, water, air). A new electrical substation serves the active portions of the 202-A Building ventilation system, new surveillance lighting, and various leak detection circuits. Other potential energy sources include external events (lightning, vehicles), and transient combustibles.

Energy from potential criticality events were precluded as a concern based on the results of the criticality safety evaluation report (CSER 96-012). This evaluation concluded that criticality is not credible at the PUREX facility for the S&M period based on the form and distribution of materials. In this analysis, no credit was taken for any

controls or configuration of equipment; therefore, criticality energies and consequences can be excluded from the hazards analysis in this document.

Given the planned S&M activities, the form and distribution of the remaining material within the PUREX facility, and the facility equipment configuration, no significant accident scenarios were identified other than those resulting from external events or a loss of power. As a result, those scenarios are identified as bounding in the hazards analysis.

This page intentionally left blank.

3.0 OPERATIONS

The purpose of this BIO is to identify the conditions and configuration of the deactivated PUREX facility. This information is used in the identification and evaluation of the risks posed by the facility during the S&M period. Information related to operations and anticipated activities during S&M are discussed in this chapter.

3.1 SURVEILLANCE AND MAINTENANCE ACTIVITIES

The objective of the S&M activities is to maintain the facility structure and equipment, and identify, track, and evaluate the hazardous material conditions and location. These activities are performed using formal procedures developed based on the facility conditions, end point criteria, and safety and health objectives.

The end point process used in the PUREX transition project considers worker access as one of the inputs for criteria development. S&M procedures and the associated path through the facility were developed to ensure that personnel did not access areas that were identified as having no worker access during S&M. The S&M path is illustrated in Figures 3-1 through 3-5.

The scope of work addressed by this document is routine, long-term S&M of the PUREX facility and associated waste sites.

3.1.1 Performance Expectations for PUREX S&M Activities

The expectations for the PUREX S&M activities are to provide the following:

- Timely identification of the structural and/or operating system conditions that could potentially compromise the defined containment boundaries.
- Safe working conditions for individuals performing S&M activities.
- Periodic, scheduled maintenance to ensure adequate operational status of necessary equipment.

3.1.2 Performance Objectives of the S&M Program

The objectives of the S&M program are outlined as follows.

- Ensure adequate containment of remaining hazardous substances, including radioactive materials.
- Provide physical safety for workers and security controls for facility access.

- Maintain the facility in a manner that will minimize potential hazards to the workers, the public, and the environment.
- Maintain facility systems and equipment that will be essential for D&D activities in a shutdown but standby/operational mode.
- Comply with applicable environmental, safety, health, and safeguards and security requirements.

3.1.3 Facility S&M

The PUREX facility S&M consists of measures to identify and address facility conditions to minimize worker hazards and prevent unauthorized releases of hazardous substances to the environment. Specific inspection requirements and maintenance actions are identified in the S&M procedures. These procedures establish a routine, systematic program to inspect accessible portions of facilities where hazardous substances may be present. Non-accessible portions of facilities (including areas where access is precluded due to physical constraints or high radiation fields) will be indirectly monitored to the extent practicable by inspecting the nearest accessible boundary. The activities that will comprise PUREX S&M are described in the following sections. Should additional activities (other than those described here) need to be carried out at PUREX, the activity will be separately planned and reviewed via the USQ process to determine if it is covered within the authorization basis.

Quarterly surveillance of the PUREX facility will consist of a walk-through of selected portions of the 202-A Building, ancillary buildings, and the adjacent outdoor area. The quarterly surveillance will check for indications of structural defects, roof deterioration, posting deficiencies, contamination migration, unidentified hazardous materials, hazardous conditions, unlabeled containers, unidentified friable asbestos, failed lights, and water, animal, or insect intrusion. Surveillance lighting will be provided to PUREX buildings/cells classified as Case 1 spaces that require routine access, as described in the PUREX deactivation end point criteria document (WHC 1995).

PUREX
Pipe and Operating Gallery
Surveillance Route
(West End)

Figure 3-1. PUREX Pipe and Operating Gallery Surveillance Route (West End).

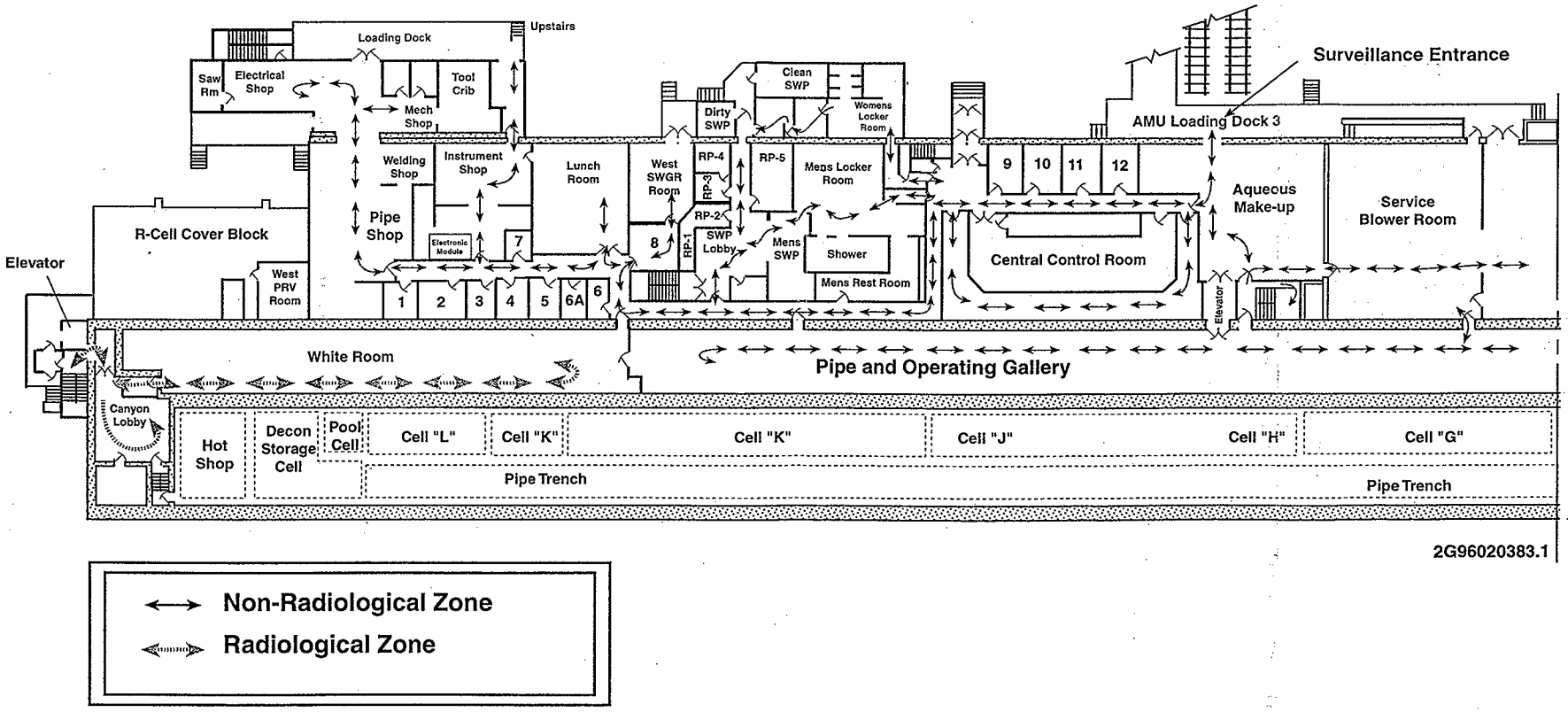

Figure 3-2. PUREX Pipe and Operating Gallery Surveillance Route (East End).

PUREX
Pipe and Operating Gallery Level Surveillance Route (East End)

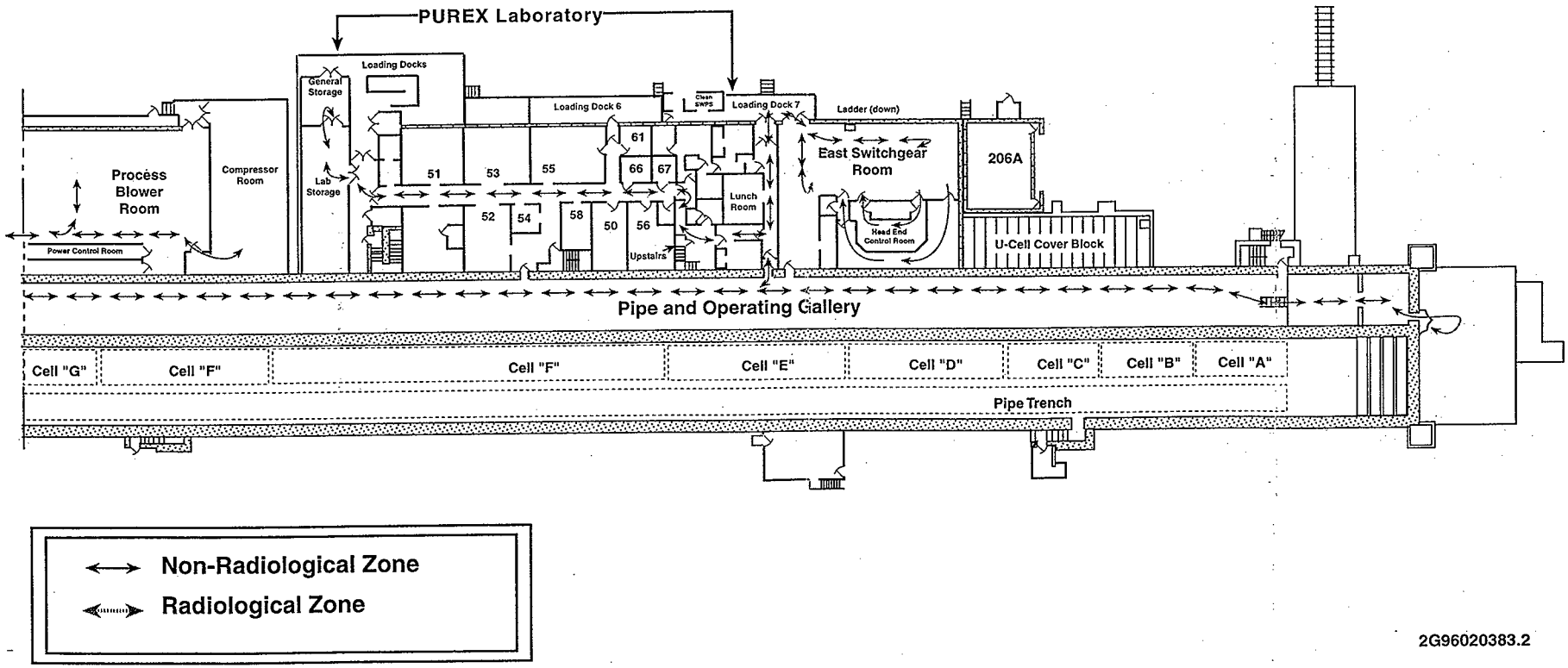

2G96020383.2

PUREX Storage Gallery Surveillance Route (West End)

Figure 3-3. PUREX Storage Gallery Surveillance Route (West End).

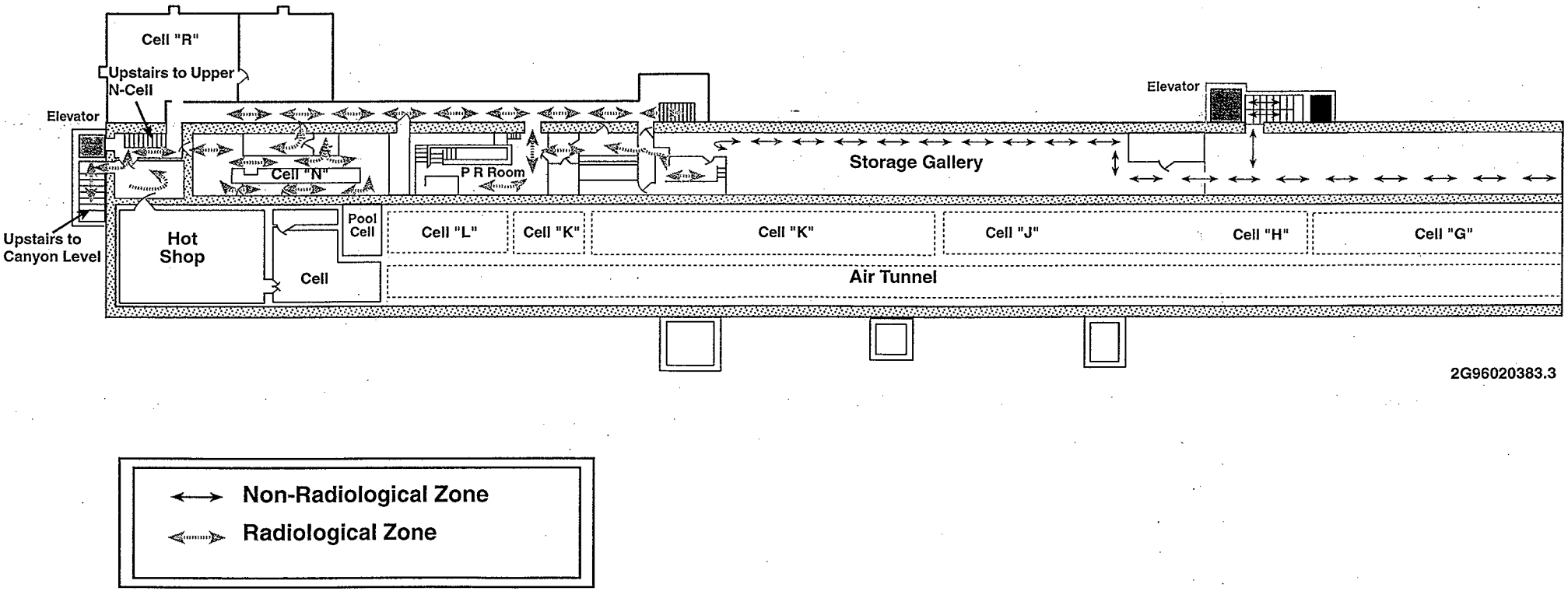

Figure 3-4. PUREX Storage Gallery Surveillance Route (East End).

PUREX Storage Gallery Surveillance Route (East End)

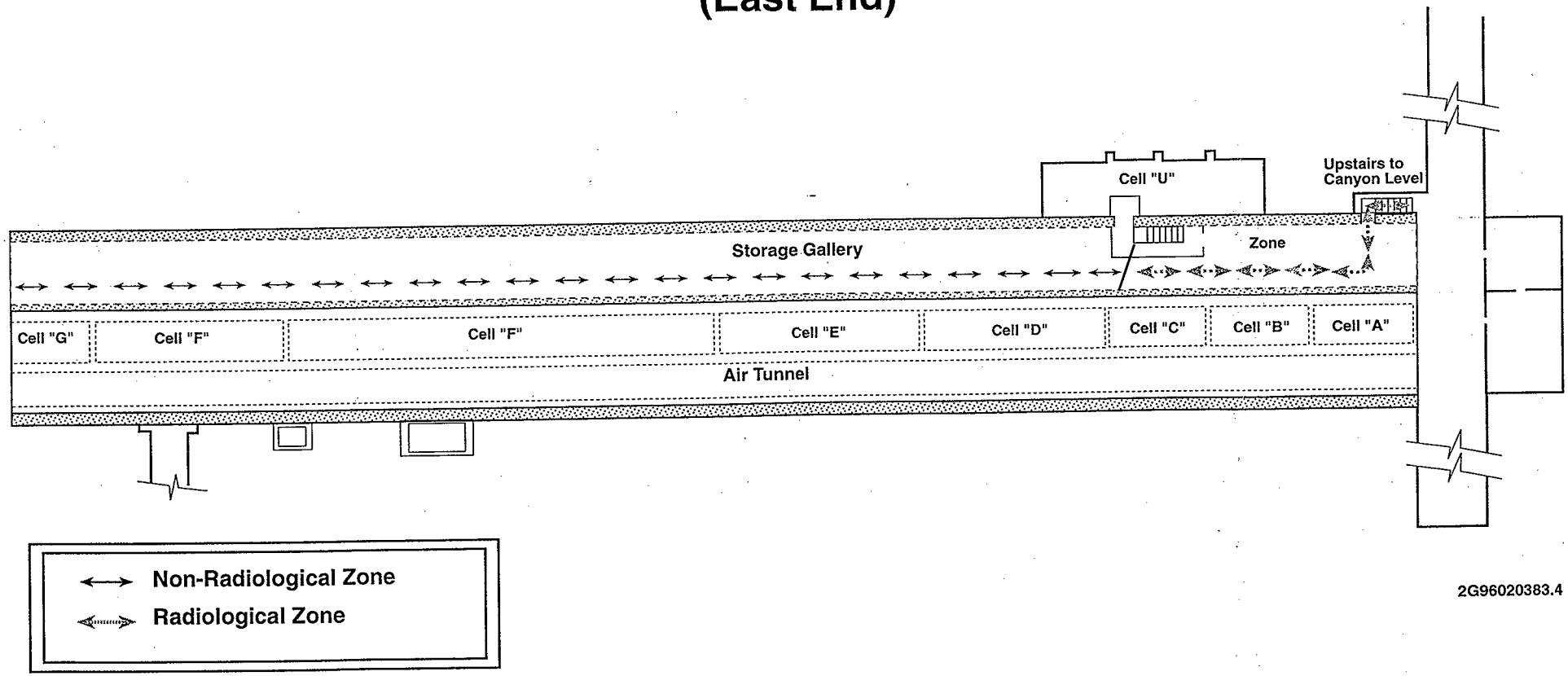

Figure 3-5. PUREX Office and Lunchroom Area Surveillance Route.

PUREX
Office and Lunchroom Area Surveillance Route

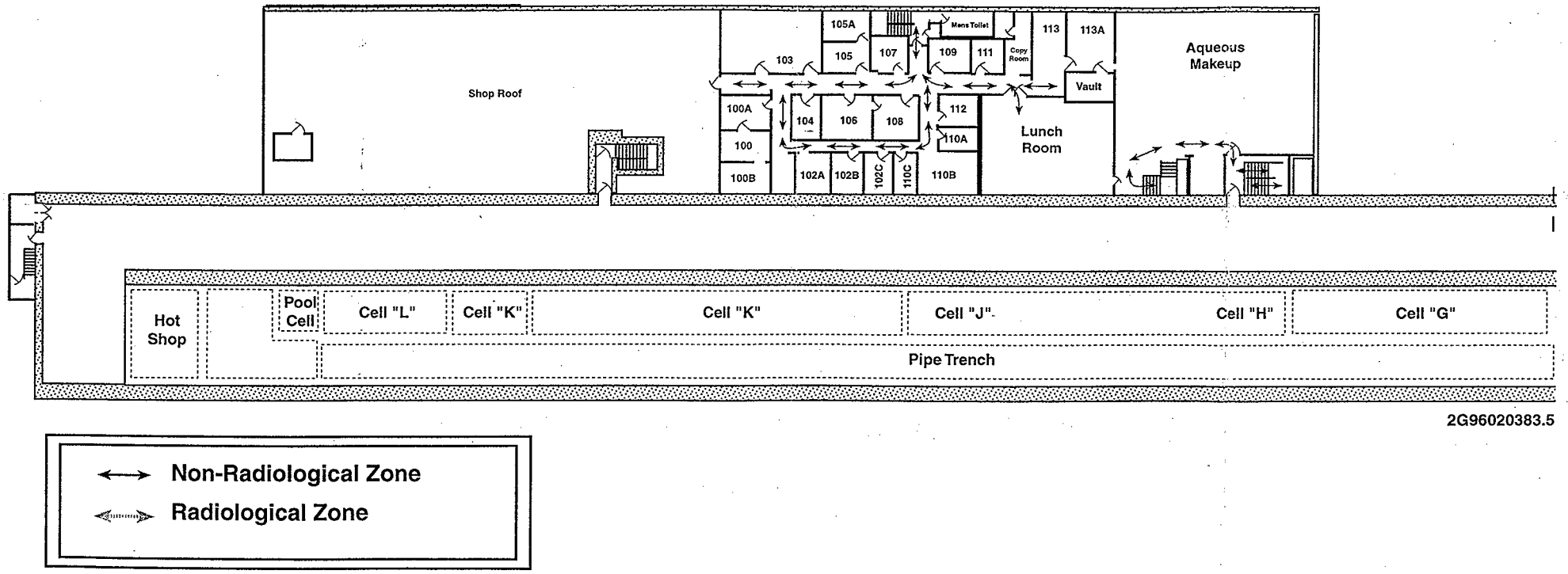

The suggested route for quarterly inspections of the indoor and outdoor areas will be shown in the surveillance procedure, including identification of access points to the facility roofs. The walk-through of the 202-A Building will include the following areas when appropriate:

- Pipe and operating gallery level
- Storage gallery level and aqueous makeup unit (AMU) basement
- Office and lunchroom area
- Radiological zones including the hot shop lobby, N-cell (upper and lower levels)
- Plutonium receiving (PR) corridor, PR room, Q-cell, canyon lobby, white room, and west stairwell.

The following provides a general explanation of the scope of S&M activities. Administrative procedures will provide specific direction for performing S&M activities and documenting observations, findings, and needed modifications.

S&M of Facility Barriers and Postings: Facility barriers (e.g., door locks, fencing) and postings will be inspected. Repair or replacement of these access control measures will be undertaken as necessary.

Identification and Removal of Damaged Friable Asbestos: Asbestos-bearing materials within accessible areas of facilities and exterior to the buildings (but within the complex) will be inspected. If damaged friable asbestos is present, the area will be isolated from normal surveillance traffic. If the scope or severity of the damaged friable asbestos requiring repair or removal is more than minor in nature, and therefore outside the scope of S&M activities addressed in this document, such activities would be planned separately.

Container Management Activities: Routine surveillance could identify containers within accessible areas of the facilities. The contents of any previously undiscovered containers will be identified and the containers will be properly labeled. When practicable, containers will be removed and transported to an appropriate onsite or offsite facility for treatment, storage, or disposal. If containers remain in the facility, inspections will be conducted for container deterioration or signs of leakage. If deteriorating or leaking containers are found, the immediate area will be isolated and an evaluation will be conducted to determine the proper response. The response could range from no action, repackaging the container, or removing the container to an appropriate onsite or offsite facility. Removal actions addressing significant quantities of containers would be planned separately and are not included within the scope of routine S&M addressed in this document.

Equipment Calibration, Testing, Maintenance, and Repair: Routine calibration and testing will be conducted, as appropriate, on operating equipment. Elements and schedules for these activities will be delineated in their respective field support work instructions.

Facility Maintenance: Maintenance within the scope of the S&M program includes basic maintenance of structures and roofs, maintenance and upgrades of utilities, maintenance of physical security structures (e.g., stairs, railings, walkways, doors), and minor repair of confinement. The need for repair of facility isolation and confinement systems (e.g., ventilation systems) and structural components will be identified, as necessary and controlled by administrative procedures. Upgrades/physical changes to these systems may be undertaken if the changes provide equivalent or improved protection. Any repairs or upgrades of this nature will be evaluated per BHI administrative procedures and planned separately.

General Inspection for and Response to Spills: Routine surveillance will look for any indications of spills of hazardous substances. If a spill is discovered, the affected area will be isolated to prevent inadvertent personnel exposure, and an evaluation will be conducted to determine the appropriate response. The response could include no action, cleanup and containerization of the spilled material, or cleanup and removal of the spilled material to an appropriate onsite or offsite facility.

Routine Removal of Potentially Hazardous Substances: Removing hazardous substances (including decontaminating facility structures and components) may be undertaken to the extent necessary to reduce risk to workers, the public, or the environment. Removal actions will be evaluated on a case-by-case basis; removal of significant quantities of hazardous substances would not be included within the scope of routine S&M. Any hazardous substance generated or removed as a part of the facility S&M effort will be disposed of at an appropriate facility.

Routine Housekeeping Activities: Routine housekeeping activities (see BHI-FS-O1) include tumbleweed removal; sand and miscellaneous debris cleanup throughout the outdoor area adjacent to the facility, including contamination areas; housekeeping to reduce or remove biological concerns; eradication of biological pests; removal of small amounts of contamination that may be migrating in a facility (e.g., via biological pests); and isolation of the source of the contamination spread.

Preventive Maintenance: The following are examples of preventive maintenance activities that will be performed as part of S&M:

- Inspection and lubrication of canyon exhaust fans and bearings EF-V 11-I, EF-V 11-2, and EF-V 11-3
- Inspection of vacuum pumps

- Calibration of the SAMCONS I&C unit (frequency to be determined)
- Vent and balance of the HEPA filters
  - Perform quarterly flow tests
  - Annual efficiency tests
- Cold weather protection
- Canyon exhaust fan rotation (to be performed monthly).

Environmental Monitoring: During routine S&M, the environmental sampling of the 291-A-1 main stack will consist of monthly data collection from the continuous stack particulate and iodine sampling, which is designed to provide an accurate release record for the stack.

3.1.4 Waste Site S&M

The S&M at PUREX waste sites and unplanned release sites (UPR) will consist of nonintrusive measures to prevent inadvertent exposure of humans and animals; and to preclude or respond to aboveground migration of contaminants from the site, these surveillances will be performed as part of the quarterly surveillance process. Routine S&M activities will include the following.

S&M of Barriers and Posting: Waste site barriers (e.g., fencing, barricades) and postings will be periodically inspected. Repairing or replacing these access control measures will be undertaken as necessary.

General Inspection for and Response to Releases: Inspections will be conducted at waste sites for indications of aboveground releases. These inspections will typically include radiation surveys and visual inspections to indicate releases. If a release is detected, the affected portion of the waste site will be isolated to prevent inadvertent personnel exposure, and an evaluation will be conducted to determine an appropriate response. The response could include stabilization, providing additional barriers and postings, and/or removing hazardous substances to an appropriate onsite or offsite facility.

Identification and Correction of Potentially Hazardous Conditions: In addition to surveillance for releases, periodic surveillance of waste sites will be performed to identify potentially hazardous conditions (e.g., cave-ins, intrusions, erosion, or other conditions that could lead to a hazardous substance release or exposure if not addressed). If these conditions are encountered, an evaluation will be conducted to determine an appropriate response to adequately protect human health and the environment. The actions could include removing any exposed hazardous substances and/or site stabilization.

Waste Site Stabilization: This activity would control dispersal or spread of contaminants from waste sites by applying soil fixatives, placing additional clean soil cover or vegetative mulch, or by placing sewage sludge/biosolids on the waste site.

Application of Herbicides and Vegetation Control: Herbicides would periodically be applied (by subcontractors, not S&M workers) to waste sites to control the spread of radioactive contaminants through existing soil barriers via uptake by undesirable vegetation. In addition, removing any undesirable vegetation (e.g., tumbleweeds) and re-vegetation with desirable vegetation would be undertaken on an as-needed basis.

The S&M activities were evaluated to determine the potential accidents that could result from these activities. No events with other than worker related hazards and impacts were identified resulting from these activities. As a result, the procedures discussed above do not involve any technical safety requirement (TSR) or operational restrictions. These procedures can be changed by the S&M organization using the USQ process to evaluate the impact of the change on this authorization basis.

3.2 OPERATING EQUIPMENT/SYSTEMS

There are three major systems that are operational in the PUREX facility during the S&M period. These are the HVAC system, the monitoring system, and the electrical utilities. The operational objectives and procedures are discussed for each system below. All other systems have been deactivated and are not operational. Information regarding these other systems and their previous operations can be found in the PUREX FSAR.

3.2.1 Ventilation

The operational objectives of the HVAC system were used in the development of the PUREX S&M procedures. These objectives are:

1. To minimize the spread of contamination within the facility.

2. To minimize the potential for unfiltered release to the environment.

The PUREX HVAC system consists of a canyon exhaust fan inducing air flow paths through the main building and the canyon. Cascading throughout the facility will maintain air flow from non-contaminated areas into increasing contamination zones. Two 200-Hp backup canyon exhaust fans will be monitored to provide reliable ventilation. The single operating fan is powered by an electrical substation. Mechanical or power failure of the operating canyon exhaust fan will be detected by the monitoring unit and will activate operation of the backup fan. The ventilation system in the PUREX Canyon Building (202-A) has been extensively modified from its original design. During the S&M phase, the ventilation system will be operated as a cascading

system where air flow from less contaminated areas flows into other areas where higher contamination exists. As a result of this configuration, some doorways have been converted to flow paths, while other doorways are used to block the air flow.

3.2.2 Surveillance and Monitoring and Control System

The operational objectives of the monitoring system were used in the development of the PUREX S&M procedures. These objectives are:

1. To provide information necessary for the operation of the HVAC system.
2. To identify equipment failure that could lead to an unfiltered release to the environment.

A SAMCONS I&C skid unit, located south of the 202-A Building, serves as the main data acquisition center for monitoring data. This unit will monitor and control the following items:

- Air flow throughout the major air paths and four differential pressures to determine correct pressure gradients maintaining a total flow rate of 40,000 cfm.
- Temperature measurements for the canyon exhaust fans bearings, air tunnel, and the fourth filter building.
- Liquid levels from the 216-A-2 and #2 filter radioactive liquid catch tanks resulting from stack condensate.
- Humidity and dew point of the air in the air tunnel to detect liquid accumulation on the HEPA filters.
- The main stack alpha and beta particulate measurements.
- The condition and status of the main switchgear and motor control centers. This includes primary and secondary transformer voltages, currents, and phase relationships.

Figure 3-6. PUREX Consolidated HVAC Flow Diagram.

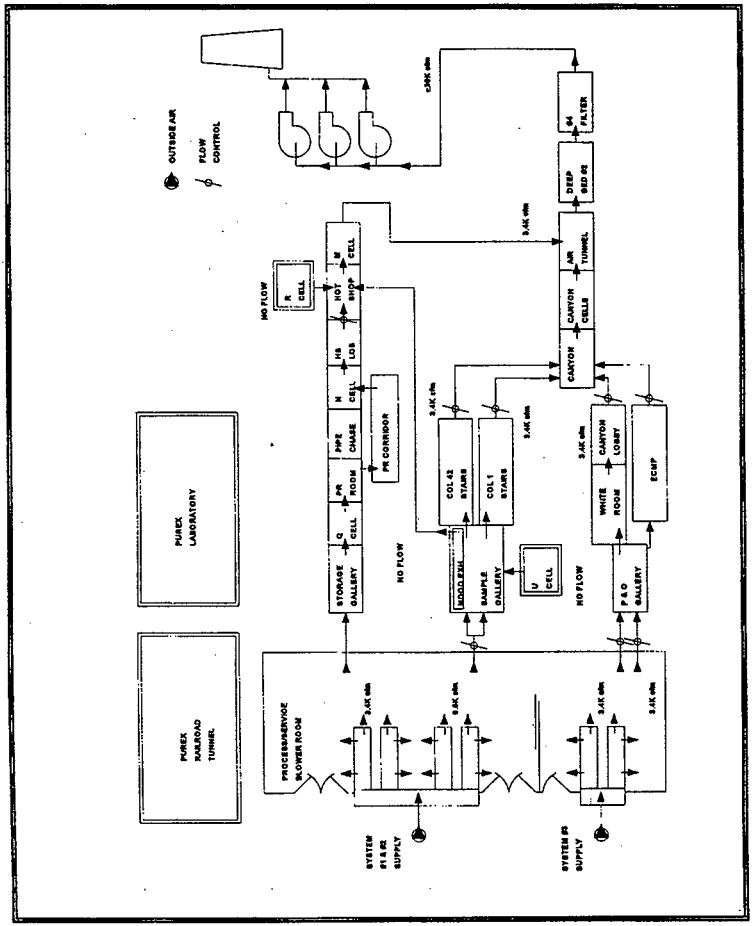

Data acquired by the SAMCONS unit then will be transmitted to a REDAC station, to be located at the 271-U Facility in the 200 West Area. The REDAC station will receive the flow of data and provide the appropriate operation control.

3.2.3 Utilities

The operational objectives of the utilities were used in the development of the PUREX S&M procedures. These objectives are:

1. Provide the necessary support to the HVAC and monitoring systems.

2. Minimize the potential for fire or electrical hazards in the utilities system.

All of the original plant power systems have been de-energized. Two electrical substations provide newly installed power systems to the PUREX facility during S&M. One station supplies 1,500 kVA of electrical power to the 292-AB Stack Monitoring Building, the 291-AE No. 4 Filter Building, the 291-A-1 Monitoring System, the operating canyon exhaust fan, and the SAMCONS I&C skid for surveillance and monitoring. The other station supplies 750 kVA electrical power to dedicated surveillance lighting throughout the facility. In addition, electric heat is provided to the 291-AE and 292-AB Buildings to protect instrumentation during cold weather. Cooling is provided to the 292-AB Building during warm weather to prevent the instrumentation from overheating.

This page intentionally left blank.

4.0 HAZARDS ANALYSIS

The purpose of this BIO is to identify the conditions, configuration and the hazards associated with the deactivated PUREX facility. This chapter presents the hazards analysis for the deactivated PUREX facility. This hazards analysis was performed using the process illustrated in Figure 4-1. The major steps in the analysis include identification of facility operations, configuration and inventory for the PUREX facility at the end of the deactivation project, the screening of facility areas based on the inventory remaining and personnel access, the completion of a PHA, and finally a consequence analysis of the bounding accidents.

The hazards analysis performed in support of this BIO was released as HNF-SD-CP-HIE-003, Rev 0, *PUREX Facility HVAC Hazard Analysis*. A summary of the key information regarding the hazards analysis and the results is presented in this chapter.

Figure 4-1. Illustration of the Hazards Analysis Approach.

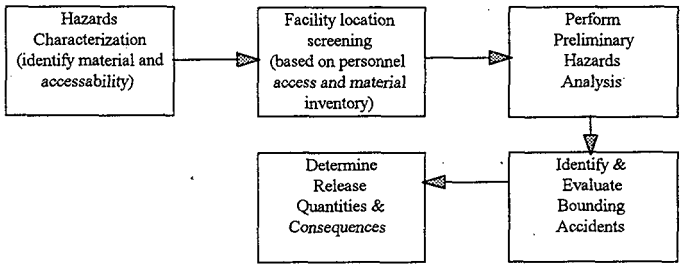

4.1 HAZARDS CATEGORIZATION

Appendix A contains a detailed hazards category evaluation of the PUREX facility end state condition. The evaluation considers the remaining material, its form and distribution, and the remaining energy sources available to initiate release events. An estimate of the final gross radionuclide inventory within the PUREX facility was performed and documented in HNF-2545, Rev. 0, *Plutonium-Uranium Extraction Facility (PUREX) Plutonium and Fission Product Residual Estimates.* The results of this estimate were identified in Table 2-3. The total gross Pu inventory used in the hazards categorization calculations is 12.84 Kg. This value is based on the measured inventory identified in the reference and the high estimated Pu value.

It should be noted that for hazards categorization and evaluation purposes the more conservative high values were used. This is in contrast to the best estimate values that

were used to identify special nuclear material (SNM) as normal operating loss (NOL). The NOL loss value is identified as 10.573 Kg Pu in DOE-RL 97-TPD-065, *Contract Number:DE-AC06-96RL13200 - B&W Company Request WR-97-08 for Nuclear Material Transaction Authorization.* The use of these two different values does not pose an inconsistency but rather is a result of using the most appropriate values for each case.

Using the gross inventory identified above, and release fractions from DOE-HDBK-3010-94, *Airborne Release Fractions/Rates and Respirable Fractions for Nonreactor Nuclear Facilities,* the releasable material at risk was calculated, and a final hazards categorization determined. From these calculations, the final hazards category (HC) of the PUREX facility in the end state is HC2.

4.2 HAZARDS ANALYSIS METHODOLOGY

The hazards analysis for the deactivated PUREX facility was performed using a two step process. The first step was a screening to identify PUREX locations to be analyzed using the PHA methodology. Locations within the PUREX facility were screened based on two criteria: (1) personnel access and (2) material inventory. All locations having a significant material inventory, as determined by the judgement of the expert review team, or subject to personnel access were analyzed by a PHA.

In the second step, a PHA was performed for each of the locations identified as meeting the screening criteria above. The PHA was based on the following list of conditions with the potential to cause the release of material:

1. Fires, Explosions

    - Flammable materials (liquids, vapors, gases, dust, bulk materials)
    - Chemical reactions
    - Electrical faults
    - External sources (vehicles, aircraft, lightning)

2. Temperature Extremes

    - Cryogenics
    - Steam
    - Radioactive decay
    - Climate extremes
    - Chemical reactions

3. Leaks of Material

    - Compressed gases
    - High pressure systems
    - Corrosion
    - Human error inadvertent valve opening)
    - Handling error (dropping object)
    - Structural fatigue
    - Rotating machinery

4. Resuspension and/or Mobilization of Material

    - System activation (HVAC)
    - Internal flooding
    - High pressure systems
    - Seismic event
    - Fixative deterioration
    - Infiltration (precipitation)

5. Increased Concentration of Material

    - HVAC failure
    - Paint/fixative.

Based upon the inventory, location, form, and potential pathways to the environment, a qualitative estimate of the likelihoods and consequences was made for each hazardous condition resulting in a release of radioactive and/or non-radiological hazardous material. The consequences were classified in accordance with Table 4-1 as to their potential impact to the offsite public, onsite worker, surveillance personnel (facility workers), or the environment. Qualitative likelihoods of releases were assigned in accordance with Table 4-2.

In addition, the hazard analysis identified means of detecting accidents and mitigating controls or systems used to prevent the occurrence or minimize the release of radioactive and/or non-radiological hazardous material. No non-radiological hazard material releases were identified by the hazard analysis that impacted the offsite public, onsite worker, or surveillance personnel.

Table 4-1. Consequence Classes.

Class	Description
I	Offsite public health impacts
II	Onsite worker impacts, no impacts offsite
III	Facility worker impacts, no impacts outside of facility boundary
IV	Environmental impacts
IVa	Considerable
IVb	Minor
IVc	Negligible
V	No significant impact

Table 4-2. Likelihood Classes.

Descriptive Word	Class	Estimated Annual Likelihood of Occurrence	Description
Normal	A	$p^* > 10^{-1}$	Incidents that are expected to occur during the life of the facility.
Anticipated	B	$10^{-1} \geq p > 10^{-2}$	Incidents that may occur during the life of the facility.
Unlikely	C	$10^{-2} \geq p > 10^{-4}$	Incidents that are not anticipated to occur during the life cycle of the facility. Natural phenomena of the probability class include: UBC level earthquake, 100 year flood, etc.
Extremely Unlikely	D	$10^{-4} \geq p > 10^{-6}$	Incidents that will probably not occur during the life of the facility. Includes DBAs.
Beyond Extremely Unlikely	E	$10^{-6} \geq p$	Incidents not considered credible and, therefore, not further analyzed.

* p is the likelihood of the evaluated occurrence.

For radiological hazards associated with the release of material from the PUREX boundary (consequence I or II), additional analyses were performed to quantitatively determine the likelihood and consequences of the potential release.

4.3 HAZARDS ANALYSIS RESULTS

Table 4-3 summarizes the results of the analyses for hazardous conditions resulting in the release of material. No offsite impacts were identified in the hazards analysis process. The PHA identified three hazardous conditions (202A-1, seismic event; AVS-4, loss of filtration; and AVS-5a, loss of power to the HVAC) with the potential for onsite worker impacts. These conditions were further analyzed to quantify likelihood and consequences. These major event scenarios from the hazards analysis are discussed

here. For more details regarding all the scenarios evaluated, consult the hazards analysis documents.

Table 4-3. Potential Releases from Deactivated PUREX.[a]

Event ID	Hazardous Condition	Likelihood	Consequence Class	Calculated Exposure or Release (100m)		Risk Guideline (100m)
202A-1	Seismic	C[(1)]	II	1.9 rem	19 mSv	250 mSv
AVS-4	Ventilation (loss of filtration)	B	II	4.6 E-2 rem[(2)]	4.6 E-1 mSv[(2)]	50 mSv
AVS-5a	Ventilation (loss of power)	B	II	4.8 E-2[(5)] rem	4.8 E-1[(5)] mSv	50 mSv
AVS-3b	Leak of material (ventilation condensate)	D	III	3.6 E-1 Ci[(3)]	—[(4)]	—[(4)]
302A-1	Leak of material (catch tank)	C	IVa	N/A	N/A	—[(4)]
AVS-3a	Leak of material (ventilation condensate)	C	IVb	4.4 E-1 Ci[(3)]	—[(4)]	—[(4)]

Notes:

[a]See calculations in HNF-SD-CP-HIE-004

(1) Bounding accident , no likelihood determined
(2) At 300 m for stack release.
(3) Maximum curies at point of release
(4) No RRG for facility worker or environmental impacts
(5) Area source, worst case meteorology, 100% residence time.

4.3.1 Seismic

The major PUREX facility structures were built in accordance with 1952 UBC Zone 2 earthquake regulations. The ability of these structures to withstand seismic events was evaluated for development of the PUREX FSAR. The relevant information, for development of this BIO, from the FSAR evaluation is presented and discussed here.

In the PUREX FSAR seismic evaluation, two severities of seismic events were considered. The least severe was the HRHE. Peak ground acceleration produced by the HRHE at the PUREX site was determined as 0.1 g. The more severe seismic event was designated as a safe shutdown earthquake (SSE). Peak ground acceleration produced by the SSE is 0.25 g. The seismic evaluation results and conclusions are presented in Table 2-2.

The seismic evaluations (References 4 to 8) performed in support of PUREX operations and the FSAR development identify the structure resistance. In general, the key conclusions from these evaluations is identified in Table 2-2. However, it should

be noted that these evaluations concluded that the cell cover blocks will not fail during the bounding seismic event. The resistance of the cover blocks, and the 202-A structure in general, help to limit the potential release of material from the canyon during a seismic event. The key structure element that fails, as noted in Table 2-2, is the east crane maintenance platform (ECMP). These results are used in the evaluation of scenarios and consequence determination. Consistent with the requirements for the hazards classification of the facility, no credit is taken for any structures regardless of the seismic evaluation conclusions.

For the hazards analysis seismic scenario, failure of the ECMP due to a 0.10-g earthquake (202A-1) was evaluated. It is assumed the ECMP supports buckle, causing the ECMP to collapse to the ground. It is also assumed that the 202-A ventilation system loses power. This event was evaluated in the PUREX FSAR and was found not to exceed offsite (~12 Km) risk evaluation guidelines except for the case involving a uranium fire. This scenario is not credible for the deactivated state.

The material at risk for this event was determined to be contaminated dust and debris contained on the floor of the ECMP. Additionally, the collapse of the ECMP provides a pathway for the release of unfiltered air from the 202-A Building.

Using these assumptions for this scenario, the total material at risk was determined to be the sum of the following:

1. The high value airborne concentrations of radionuclides in the canyon as reported for an unfiltered release due to loss of HVAC (Siemer 1995). This value is conservative since the majority of material remaining in the 202-A is contained in the PUREX canyon, which is assumed to survive with the cover blocks intact. Additionally, other Pu isotopes were added based on the ratios in the PUREX FSAR. The remainder of the 202-A Building also survives the earthquake; therefore, no motive force was identified to lift additional airborne material from the cell floors (40 ft below grade) through the cover blocks and out the opening left by the ECMP collapse.

2. The material at risk within the ECMP was estimated based upon a conservative average of samples taken from the ECMP. This average sample is 30,000 dpm alpha, 100,000 dpm beta, and 30,000 dpm gamma, with a sample size of 100 cm^2 (Berk 1995). It was conservatively assumed this activity resulted from Pu_{239}, Sr_{90}, and Cs_{137} and was uniformly distributed on all ECMP interior surfaces. The interior surface area of the ECMP is estimated to be l.l E+7 cm^2 (RHO-CD-1560).

This yielded the following material at risk: 1,488 µCi Pu_{239}, 4,961 µCi Sr_{90}, and 1,488 µCi Cs_{137}. Modeling the material at risk resulted in a total effective dose equivalent (TEDE) as shown in Table 4-4. These dose consequences are well within the risk evaluation guidelines.

Table 4-4. Dose Consequences of Collapse of ECMP.

Receptor Population	TEDE (rem)	TEDE (mSv)
Onsite (100 m)	1.9	19
Offsite	7.4 E-04	7.4 E-03

4.3.2 Ventilation - Loss of Filtration

This event is based on a loss of filtration and a resulting unmitigated release of material through the 291-A-1 stack. The following assumptions were used in the evaluation of this event:

1. The air concentrations of radionuclides being released would be the average of the air samples taken upstream of the filters (sample probe data) plus the other Pu isotopes as identified in the PUREX FSAR.

2. For evaluation of the filter failure condition, it was assumed that the fans would continue to pull 40,000 cfm of air though the stack unfiltered.

3. The accident condition was assumed to last 24 hours.

Table 4-5 identifies the specific releases that were considered in the evaluation of this scenario. These values are based on the sample probe data and filter failure source term. The filter release quantities as identified in the hazards analysis documents are 2.0 E-2 g Pu_{239}, 25 µCi Am_{241}, and 2.0 E-2 Ci of Cs_{137}/Sr_{90}.

Table 4-5. Loss of Ventilation Release Quantities.

Isotope	24 Hr Release (µCi)
Co-60	4.6 E-1
Sr-90	3.0 E+4
Y-90	3.0 E+4
Ru-106	4.6 E+1
Sb-125	1.6 E+2
Cs-134	8.1 E-1
Cs-137	9.4 E+2
Pb-212	4.8 E+1
Bi-212	5.3 E+1
Pu-238	6.5 E+2
Pu-239	3.3 E+3
Pu-240	1.2 E+3
Pu-241	1.1 E+5
Pu-242	4.2 E-1
Am-241	6.7 E+2

The resulting dose consequences as reported in the hazards analysis documents are identified in Table 4-6. These dose consequences are well within the existing risk evaluation guidelines.

Table 4-6. Dose Consequences of Ventilation Scenario AVS-4.

Receptor Population	TEDE (rem)	TEDE (mSv)
Onsite (300 m)	4.6 E-2	4.6 E-1
Offsite	7.2 E-3	7.2 E-2

Based on these consequences, the current risk evaluation guidelines, and the probability of loss of filtration for an extended period of time the consequences of this scenario would be within the risk evaluation guideline for a period of greater than 90 days.

4.3.3 Ventilation - Loss of Power

This event scenario considers the loss of power to the PUREX ventilation equipment. The failure of power to the fans results in the unmitigated and unfiltered release of material (due to facility "breathing") from the PUREX facility (202-A). Previous evaluations of the PUREX HVAC (Internal memo, JMS-8M400-95-001, *Safety Class of PUREX Ventilation System Equipment,* Judith M. Siemer, July 27, 1995) system failure have considered this scenario using the assumption that all flow via the stack due to natural draft is blocked. Evaluation of this scenario using the average values from the sample probe data, and adding the other Pu isotopes based on the ratios in the PUREX FSAR, resulted in the associated dose consequences identified in Table 4-7.

Table 4-7. Dose Consequence of Loss of Ventilation Power Scenario.

Receptor Population	TEDE (rem)	TEDE (mSv)
Onsite (100 meters)	4.8 E-02	4.8 E-01
Offsite	2.97 E-04	2.97 E-03

However, based on the quarterly surveillance associated with the PUREX facility during extended S&M, additional calculations were performed to consider the consequences of an extended release under these conditions. A number of conservative assumptions were made in modeling this scenario, key assumptions include:

- 1,000 cfm flow rate from PUREX under static conditions.
- The radionuclide content in all unfiltered air released is the same as the content identified by sampling probe at 80,000 cfm HVAC flow during deactivation activities.

- No release pathway reduction factor is assumed.
- No consideration of gravitational settling (deposition) was considered.
- No consideration of building wake effects.
- No consideration of plume meander.

This analysis considered a number of different case scenarios for evaluation. These cases were based on the variation of (1) point source and area source, (2) worst and average meteorology, and (3) 50% or 100% receptor residence time. In all cases the receptor was considered as the onsite worker and was located 100 meters from the PUREX facility. The results and individual case assumptions are identified in Table 4-8.

These results were then used to determine the length of time following system failure until the current risk evaluation guidelines were exceeded.

To ensure that the appropriate risk evaluation guidelines were considered, failure likelihood calculations were performed. These calculations were based on the modified HVAC system for extended S&M, and are detailed in the hazards analysis reports. The results of these calculations are identified in Table 4-9.

Table 4-8. Onsite Dose Consequences of Extended HVAC Failure Times.

Case Scenario	EDE 24 Hours (rem)	EDE 30 days (rem)	EDE 90 days (rem)
Area source, worst case meteorology and 100% residence time.	4.8 E-2	1.44	4.32
Area source, worst case meteorology and 50% residence time.	2.4 E-2	7.2 E-1	2.16
Point source, annual average meteorology and 100% residence time.	9.2 E-3	2.8 E-1	8.3 E-1
Point source, annual average meteorology, and 50% residence time.	4.6 E-3	1.4 E-2	4.1 E-1

Table 4-9. Failure of the HVAC for Days.

Length of Outage (days)	Likelihood
1	2.6 E-3
10	1.7 E-4
40	5.7 E-5

Using the likelihood values identified in Table 4-9, the failure of the PUREX HVAC for greater than 10 days is identified as unlikely ($>10^{-4}$ to $\leq 10^{-2}$) and the current risk evaluation guidelines identifies an EDE value of 250 mSv or 25 rem. Therefore, to exceed the current risk evaluation guidelines, the PUREX HVAC system failure would be necessary for between 520 days to 5,434 days.

4.4 FIRE HAZARDS

None of the accident scenarios above was based on a fire within the PUREX facility during the extended S&M phase. The lack of combustibles, other than those required for S&M activities, and the lack of ignition sources, other than during surveillance periods, form the basis for this conclusion.

A fire hazards analysis (FHA) for the deactivated state, WHC-SD-WM-FHA-013, was completed as required by DOE Order 440.1, *Worker Protection Management for DOE Federal and Contractor Employees.* In this document, the fire hazards throughout the facility were evaluated for their potential impact on personnel, property, and the environment. Worst case fire scenarios were defined in order to simplify the analysis and yield conservative results. The potential impact to the 291-A exhaust system filters, as a result of a canyon building fire, was a principal consideration in the analysis. The fire analysis demonstrated that ignition of the exhaust system filters would not occur as a result of a combustible liquid fire in a process cell.

Similarly, the potential for a fire incident in the 202-A laboratories was a primary consideration in this evaluation. The analysis of the laboratory areas concluded that hazards in the area have been sufficiently controlled to preclude a fire incident during the extended S&M phase.

The facility has a low fire risk as a result of the deactivation activities and the final end state conditions. The potential consequences of fires at the PUREX facility have been minimized by the presence of fire-resistive or noncombustible construction features in the areas where fire incidents are likely to occur. A primary factor in minimizing losses at PUREX is the scarcity of in-situ and transient combustibles at the facility. In addition, separation or confinement of the remaining combustibles is a key factor in minimizing the adverse effects of fire incidents.

With the exceptions noted here, the results of the FHA supported the deactivation of all fire protection systems at the facility. Fire protection features that remain for the extended S&M phase include:

- The self-contained fire suppression system at the new electrical substation.
- Fire hydrant R-6A on the south side of the PUREX building and two new fire hydrants on the north side.
- The raw and sanitary water lines, located on the north side of the plant.

There were several recommendations and requirements that are required based on assumptions and results of the FHA pertaining to Life Safety Code, NFPA 101. These requirements are incorporated into this document in Chapter 5, *Safety Functions and Controls.*

4.5 CRITICALITY SAFETY

A criticality safety evaluation report (CSER) was completed in support of the deactivation of the criticality alarm system (CAS) at PUREX. This evaluation, WHC-SD-SQA-CSA-511, Rev. 0, *Criticality Safety Evaluation Report 96-012: Facility Re-classification and Criticality Alarm System Shutoff for Deactivated PUREX,* addresses the necessary controls and requirements for criticality safety at PUREX during the extended S&M phase.

The CSER indicates that the remaining residual material is generally dispersed in thin layers in gloveboxes, floors, and walls in the cells. Based on the quantities, form, and distribution of the material, criticality is not considered a credible accident during the S&M period. The CSER evaluation discusses the material, form and distribution as well as credible upsets or accidents involving this material for the S&M period. It is concluded that, because the form and distribution precludes the possibility of criticality, the PUREX facility can be classified as a "Limited Control Facility" for criticality safety programs and that a CAS is no longer required.

One of the primary areas evaluated in the CSER was the N-Cell gloveboxes. Some key N-Cell gloveboxes are illustrated in Figure 4-2 which illustrates a cutaway view of the N-Cell area. Figure 4-3 is a floor plan of the west end of the PUREX facility which illustrates several of the areas identified as containing fissile material in the deactivated end state condition.

Figure 4-2. Cutaway View of PUREX N-Cell.

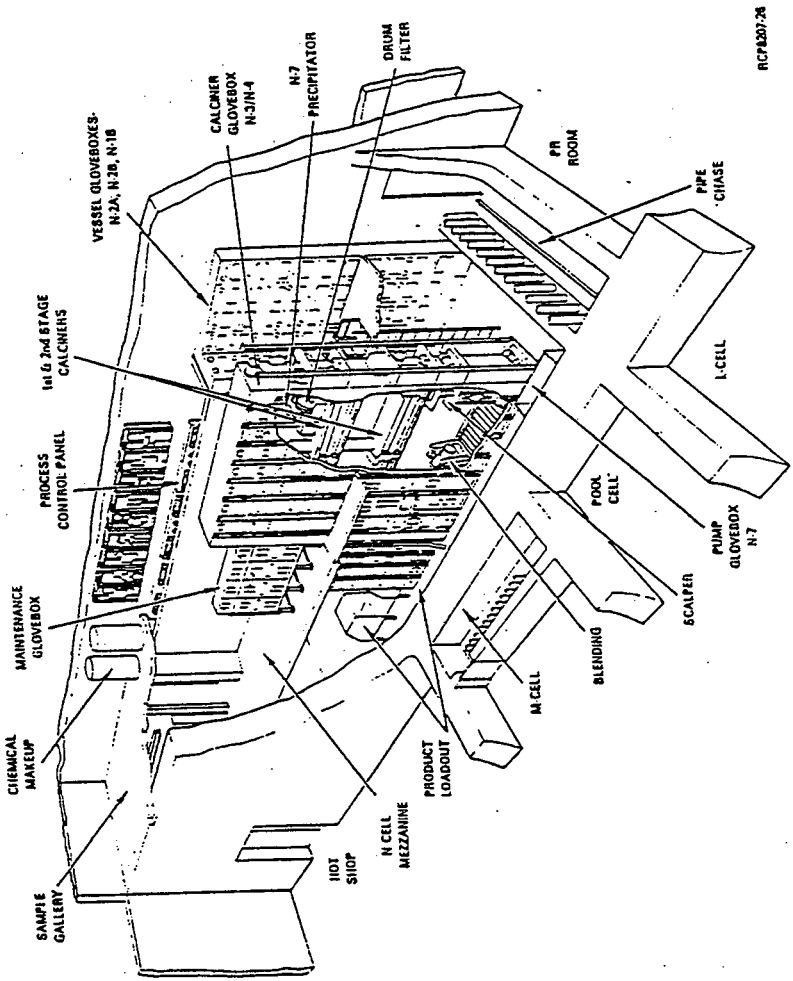

Figure 4-3. Floor Plan of PUREX West End, Building 202-A.

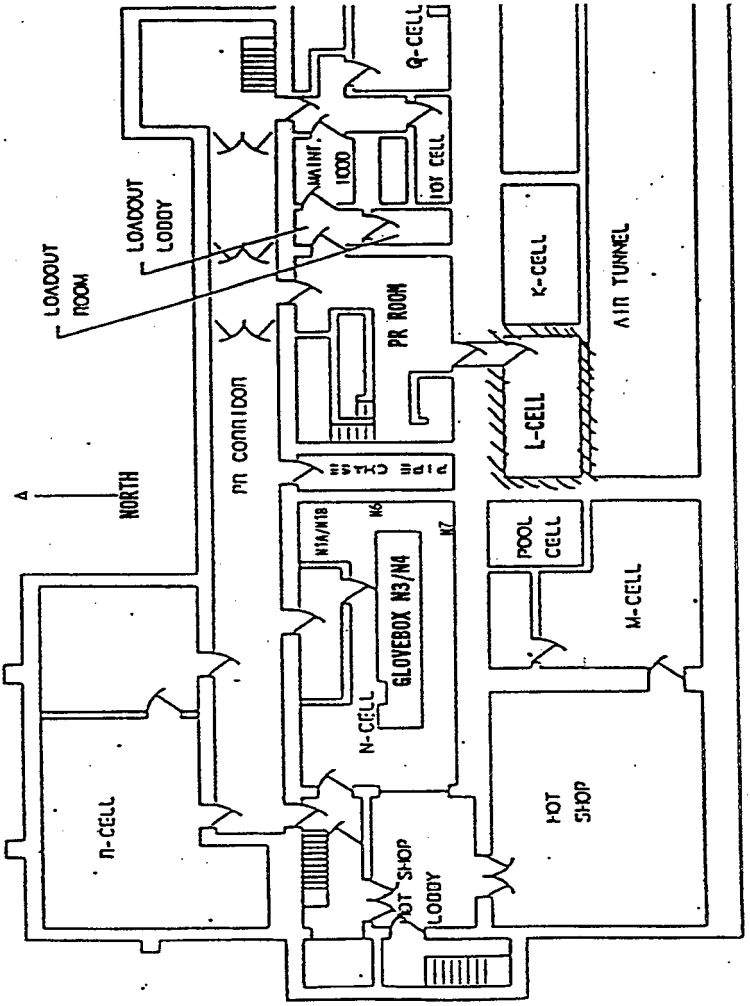

For the S&M phase no deactivation activities are authorized. However, per the CSER the following activities related to S&M are authorized:

- The removal of Pu contaminated equipment and disposal in waste drums.
- Storage of TRU bearing waste containers as provided in the existing CSERs and CPSs.

The CSER explicitly prohibits any activities involving greater than 15 g of non-fixed Pu. In the event that any activity should identify this quantity of material, the activity is to be stopped until a criticality evaluation is completed to identify the potential for criticality and the necessary controls to complete the activity.

Additional discussion in the CSER addresses some specific areas and activities of concern which would require additional criticality evaluation. These activities include:

- Entries into L Cell are not permitted by this CSER. An additional criticality evaluation with determination of appropriate criticality alarm coverage is required prior to L Cell activities.
- Some of the gloveboxes in N Cell and the PR Room contain greater than a minimum critical mass. This CSER does not address any internal glovebox work.
- Although a CAS is not required for storing or handling properly loaded and sealed shipping containers, this exemption does not extend to the loading operation, or to the closed containers themselves until they have been shown to comply with the appropriate limits.
- It is expected that insignificant quantities of material remain in the M Cell and Pipe Chase storage tanks. However, the expectation has not been confirmed by nondestructive analysis (NDA) measurements. Until NDA measurements confirm that each location contains less than a minimum critical mass, any operation or modifications in the Pipe Chase or the M Cell vault should be covered by a specific CSER.

These requirements and restrictions are incorporated into the list of authorized activities and into the surveillance and maintenance procedures. These requirements and their implementation are discussed in Chapter 5, *Safety Functions and Controls*, of this document.

4.6 WORKER SAFETY IMPACTS

There are a number of potential worker hazards associated with S&M activities in the deactivated PUREX facility. A discussion of the conditions for S&M activities potential

hazards identified during the hazards analysis and authorization basis document preparation follows. This discussion is not all inclusive but is provided as an indication of the types and relative significance of the hazards associated with the facility.

4.6.1 S&M Conditions

Surveillance lighting will be provided to PUREX buildings/cells requiring routine access, (classified as Case 1 spaces) as described in PUREX *Deactivation End Points* criteria (WHC 1995). Walkways in routinely accessed areas will be lighted with the new S&M lighting system to a level to allow normal movement and identification of hazards but not adequate for fine work or inspections in adjacent areas. In areas adjacent to the surveillance path outlined in the surveillance procedures, provisions for supplemental lighting must be made.

The areas of N, PR, and Q cells and the west end of the sampling gallery area are surface contamination areas that will be routinely entered (quarterly) for S&M. The entire building ventilation system is cascaded from cleanest areas to most contaminated areas; it will operate at about 40,000 cfm and will be continuously monitored (by computer system at 271-U) to ensure that system changes are identified and corrected between surveillance entries.

Less restrictive control, other than radiological and tight control of roof access, is imposed in areas external to the buildings (Case 3) than will be in place for routinely accessed internal areas (Case 1). The occasional entrance into nonroutine internal areas (Case 2 spaces) is possible during the S&M phase. These entries will be tightly controlled because industrial safety and radiological conditions in these areas were not addressed as thoroughly during the deactivation of the plant. Videos exist of the "as-left" conditions in each area, and there will be some radiological baseline information in the turnover files.

Outdoor areas (Case 3 spaces) are generally non-contaminated and not unlike the conditions at any light industrial complex. However, the area does contain approximately 107 waste sites and unplanned release sites. Much of the area is gravel covered and may receive periodic herbicide or pesticide application to control weeds and insects. All known contaminated areas are posted; however, additional areas of contamination may be discovered due to animal intrusion or other circumstances.

The remaining hazardous materials in the facility complex are listed Appendix B and, for the most part, are well isolated from the S&M worker. Remaining hazardous materials include lead and mercury in the canyon, lead (which is contained) in various locations, and various materials that could not be removed as part of deactivation (e.g., silver, cadmium, chromium, barium, PCBs, asbestos, zinc, and organic lubricants).

There are radioactive materials throughout the facility complex. In accessible areas, these materials are either contained or stabilized to meet airborne, contamination, or radiation limits. Posting to identify these materials is an end point of any affected area.

The transition end point criteria provide for removing or stabilizing accessible contamination, draining pipes, flushing tanks, removing batteries, capping air exhausts, and sealing doors and openings in walls.

External and internal drains connecting to exterior waste sites have been isolated by blanking. Physical and environmental conditions that could cause adverse affects will have been minimized or removed to the extent possible to meet the identified end point criteria as part of the deactivation process. In addition, the ventilation system will be monitored so that any change in flow or flow stoppage will be known and appropriate measures will be designed prior to entry into an area after an upset condition.

4.6.2 Potential S&M Hazards

A hazard is defined as a source of danger (i.e., material, energy, or operation) with the potential to cause illness, injury, or death to personnel or cause damage to a facility or to the environment (without regard to the likelihood or credibility of accident scenarios or consequence mitigation). Based on reviews of available documentation, plant tours, and interviews with inactive facilities surveillance and maintenance (IFS&M) personnel, the PUREX facility and its associated structures contain the following hazards:

Radiological Hazards: Some decontamination has been performed along the surveillance routes to minimize the need for anti-contamination clothing. Radiological contamination has resulted from leaks in process lines used for the chemical separations processes during plant operation.

Radiation Areas: The PUREX facility was used for separation of uranium, plutonium, and neptunium from irradiated fuel. While these two elements do not normally generate measurable radiation fields, the fission products that are produced with plutonium do generate radiation. These areas are located in certain portions of the pipe and operating gallery, the sample gallery, and the storage gallery.

High Radiation/Very High Radiation Areas: The canyon at the PUREX facility is a high radiation area, with very high radiation areas existing in the process cells and the hot pipe gallery. There are also small high radiation areas located in the sample gallery that have been shielded and will not normally be entered as part of routine S&M.

Airborne Radioactivity Areas: The entire canyon area of the PUREX facility and other isolated areas of the facility are an airborne radioactivity areas. Except for the canyon area (the crane-way), none of these areas will need to be routinely accessed during S&M activities. If any entry into such areas is made, it will be in accordance with an activity-specific radiation work permit (RWP) that will require appropriate respiratory protection, thus avoiding the necessity for continuous air monitors in the facility.

Contamination/High Contamination Areas: The entire canyon area, along with designated areas in the operations, pipe, sample, and storage galleries contain contamination or high contamination areas. All of the contamination and high

contamination areas are posted and appropriately labeled. Some areas of fixed contamination also exist that have been covered with multiple layers of paint or polymeric barrier system (PBS). To minimize the potential for exposing these areas, the floors have been painted or coated with PBS and rubber mats have been placed on the surfaces. One surface contamination area exists outside the PUREX facility (to the southeast of the PUREX facility).

Industrial Hazards: Many bump hazards exist from projecting valve stems, low piping, and structural items in the surveillance areas. Fall hazards are present on the flat roofs, on stairs, and from platforms. Tripping hazards exist where piping is at ground level or where covers/shielding have been placed on the floors. Confined spaces will not be routinely accessed.

Energy Sources: The two electrical substations providing newly installed power systems to the PUREX facility during S&M were described in Section 3.2.3. Hazards associated with the new systems include electrical shocks from contact with exposed conductors during maintenance activities.

Asbestos: Some sections of the piping systems have been insulated with asbestos-bearing materials, and transite siding is exposed in several areas within the facility. Damaged areas have been repaired; however, natural deterioration or new damage may cause the asbestos particles to become airborne.

Chemicals: PUREX was a chemical processing facility that used large quantities of chemical solutions to process irradiated fuel elements. While the facility deactivation removed bulk materials and flushed systems, residual materials may remain in tanks, pipes, sumps, instrumentation lines, and system dead legs.

Hygiene/Biological Hazards: The facility is subject to periodic animal intrusions that could leave potentially contaminated urine or feces. Spiders, snakes, and other creatures may be present in many areas of the facility and present a hazard from bites.

Unwanted Water Infiltration Hazards:

- Radiological hazards - Unwanted water infiltration may cause spread of radiological contamination from areas where smearable contamination exists.

- Electrical hazards - Unwanted water infiltration may create an electrical shock potential for personnel. This is caused by water entering energized components or conductors that have not been properly protected.

- Industrial hazards - Unwanted water infiltration into structural components of the building cause deterioration to these structures and present a slipping hazard to personnel walking on these wet surfaces during surveillance.

Ammonium Nitrate: During previous operations, a large quantity of ammonium nitrate accumulate on the pre-filters of both glass-fiber filter units. Tests conducted by Hazards Research Corporation (HRC) in the fall of 1978 and spring of 1979, with filter media containing several times the estimated concentrations in the actual pre-filters, support the conclusion that this ammonium nitrate is safe under any credible accident scenarios. (Reference PUREX FSAR page 5-86).

4.6.3 Potential Worker Hazards Identified in the Hazards Analysis

As part of the hazards analysis process, a study to evaluate the hazardous conditions that could potentially expose the surveillance workers to unexpected or increased hazards was performed (reference Section 5.2 of HNF-SD-CP-HIE-004). These scenarios do not result in any requirements beyond the expectations of existing programs to addresses these types of hazards. They are presented here to identify the results of this evaluation.

Fire

For fires, the primary hazard is inhalation of contaminated smoke particles. The potential for fires in the areas with routine access has been reduced by the removal of combustibles and ignition sources. However, since no automated fire suppression systems remain active in the PUREX facility (202-A), personnel should be aware of the potential risk with respect to exposure to flames and heat, as well as the potential inhalation of contaminated smoke particles.

Loss of HVAC

The loss of HVAC to the PUREX facility could result in the spread of contamination within the facility, and personnel entering the facility following an HVAC system failure should use additional precautions. Personnel should not be allowed to enter the facility during such an event without proper protective clothing and equipment.

Hazardous Materials or Chemicals

No events were identified involving these types of materials.

Radioactive Materials

Several events could potentially transport material into unexpected areas, increase localized and airborne concentrations of material, or expose personnel to unexpected levels of radiation. Contributing causes identified include leaks of contaminated material or uncontaminated material across a contaminated surface, deterioration or flaking of fixative on a surface contamination area, fire, loss of HVAC, and loss of shielding. The potential impacts of these events will be effectively controlled by the existing safety programs.

5.0 SAFETY FUNCTIONS AND CONTROLS

The purpose of this BIO is to identify the conditions, configuration, and the hazards associated with the deactivated PUREX facility. This chapter discusses the safety equipment, systems and programs as well as administrative controls necessary to ensure the safety of the worker, the public, and the environment during the extended S&M period. The evaluation of these systems, equipment, and programs was made using the hazards analysis discussed in the previous chapter. In general, the level of controls required for the S&M period are limited to administrative controls and institutional programs.

5.1 STRUCTURES, SYSTEMS, AND COMPONENTS

From the dose consequences and relative hazard posed by the various scenarios evaluated in the previous section, there are no systems identified that warrant TSRs. This is based on the fact that unmitigated consequences for the scenarios are well below the current risk guidelines. Since these systems are not required to ensure the acceptability of the risk associated with the PUREX facility during long term S&M, no TSRs are developed for these systems.

The lack of TSRs does not, however, exclude a requirement for the operation of these systems as described in this BIO. The operation of these systems is a commitment made to the DOE in this document and constitues part of the authorization basis for this facility. As a result, and decision to eliminate these systems will require a USQ and decision approval of the DOE.

There are four major systems remaining active on at least a part-time basis during the S&M period at PUREX. These systems are the HVAC, the S&M lighting, the utilities, and the SAMCONS I&C unit. Each of these systems is evaluated for classification as either a safety class or a safety significant system.

These systems and equipment are evaluated per the criteria of Project Hanford Safety Analysis procedures. The criteria in these procedures have been conservatively applied to the remaining structures, systems and components (SSCs) for the PUREX deactivated end state. Using these criteria the following structures were identified as safety significant:

- 202A confinement structure;
- FH-V11-1, Deep Bed Fiberglass Filter No.1 confinement structure; and
- FH-V11-2, Deep Bed Fiberglass Filter No.2 confinement structure.

5.1.1 HVAC System

The objectives of the PUREX HVAC system during S&M are to minimize the spread of contamination and to minimize the potential for unfiltered release to the environment. From the hazards analysis and discussion in Chapter 4, the failure of the HVAC system, even for an extended period of time, does not result in consequences to the onsite worker, public, or environment that are not within the current acceptance criteria. From Table 4-3, the highest acute onsite 24 hour dose consequences of a HVAC system failure are 4.8 E-2 rem. This value is well below the identified criteria for classification of the HVAC system as either safety class or safety significant.

Since the dose consequences do not justify classification of this system, consideration was give to the defense in depth criteria. Specifically, the following criteria was considered:

- Provide defense-in-depth prevention or mitigation of an uncontrolled release of radioactive and/or hazardous material deemed significant in the safety analysis.

While the consequences discussed above do not take credit for any filtration, confinement structures for the Deep bed filters do provide some margin of safety by confinement of current material loading. As a result, it was determined that the confinement structures FH-V11-1, and FH-V11-2, Deep Bed Fiberglass Filters No. 1 and No. 2 respectively, meet the criteria for safety significant based on defense-in-depth.

This same criteria was also applied to the system exhaust fans. The failure of the fans under ideal conditions can result in a leakage from the PUREX facility. Under worst case conditions, the consequences of this release can be as high as 4.8 E-2 rem in a 24 hour period. These consequences are well below the 5 rem onsite consequence criteria and as such do not constitute a significant release per this criteria. Therefore, the exhaust fans are not designated as safety significant. This designation is further supported by the number of days required to approach the onsite dose consequence values under average meteorological conditions, and the fact that failure of the fans does not result in an immediate exposure or release.

Similarly, the internal ductwork, and flow path components were evaluated against the following criteria:

- Prevent or mitigate an acute fatality to a facility worker or serious injury to a group of workers, except where the SSCs are controlled through an implemented institutional safety or radiation protection program.

Based on this criteria, these components do not meet the criteria for safety significant. The failure of these components could result in the spread of contamination within the

PUREX facility. However, since the facility is not occupied, there is not a significant potential to injure or expose the workers.

5.1.2 SAMCONS

The SAMCONs I&C unit, provides the monitoring capability for the PUREX deactivated facility. From the list of criteria in the referenced procedure, two are worth detailed consideration for the SAMCONS system. These criteria are:

- Support the safety function of a safety significant SSC. This includes control and monitoring functions.
- Provide defense-in-depth prevention or mitigation of an uncontrolled release of radioactive and/or hazardous material deemed significant in the safety analysis.

The SAMCONS system provides monitoring of the HVAC system parameters for operational control. The evaluation of this system, based on the first criteria above, does not result in the designation of the SAMCONS system as a safety significant system. This is based on the fact that none of the system parameters monitored were identified as safety significant.

Similarly, the SAMCONS system does not meet the defense-in-depth criteria for designation as a safety significant system. Since the consequences of HVAC system failure are well below the consequence criteria, they are not deemed significant per this criteria. Therefore, the associated monitoring of the HVAC equipment does not meet the above criteria. Since the SAMCONS system supports the HVAC operation, it is not designated as a safety significant system. Therefore, the SAMCONS system is not required for defense-in-depth.

5.1.3 Utilities

The evaluation of the utilities will include both the electrical system and the surveillance and maintenance lighting. These systems were evaluated against the following criteria to determine the appropriate classification:

- Support the safety function of a safety significant SSC. This includes control and monitoring functions.
- Prevent or mitigate an acute fatality to a facility worker or serious injury to a group of workers, except where the SSCs are controlled through an implemented institutional safety or radiation protection program.

The S&M lighting system is evaluated against the second criteria above. Worst case failure of the lighting system would be failure during a S&M operation with personnel inside the facility in areas with no external lighting. Such a failure could result in a trip

or fall injury to S&M personnel. However, since slips, falls, and other industrial hazards are addressed by institutional programs, the failure of the lighting system does not meet this criteria. This is further supported by the fact that such a failure would not be likely to result in injury to several workers.

The loss of electricity would be one criteria that would result in the loss of ventilation. However, an immediate spread of contamination would not result, but rather a gradual spread due to loss of flow from lower to greater contamination areas. As a result, the loss of power radiological impact is evaluated in the loss of ventilation (Section 5.1.1). This evaluation does not result in a safety significant criteria being met.

Evaluation of the electrical system considers the first criteria above. Since none of the systems supported by the electrical system are designated as safety significant, the electrical system does not meet the criteria for designation as safety significant.

5.1.4 Confinement Structures

While none of the operating systems were identified as safety significant in the evaluations above, consideration must be given to the confinement structures at the facility. Given the radionuclide content of the 202-A structure, this structure is evaluated against the following criteria:

- Provide defense-in-depth prevention or mitigation of an uncontrolled release of radioactive and/or hazardous material deemed significant in the safety analysis.

The failure of the confinement structure, based on a seismic event, was identified in the hazards analysis and the consequences were evaluated. The dose consequences were identified as 1.9 rem for a 24 hour release. These consequences are well below the risk evaluation guidelines and are not deemed as significant. However, the confinement structure does, using a very conservative interpretation of the criteria, provide some defense-in-depth against such a release. Based on this approach, the PUREX confinement structure is designated as a safety significant structure.

5.2 ADMINISTRATIVE CONTROLS/DERIVATION OF TSRS

Based on the hazards analysis discussed in Chapter 4, there are no accidents or scenarios that have potential consequences that warrant a TSR.

There are two factors that contribute to this conclusion. First, the PUREX inventory, as identified in Table 2-2 and Table B-2, exceeds the Hazard Category 2 values identified in DOE-STD-1027-92. As a HC 2 facility, the addition of material will not result in designation as a higher category facility (unless designated by DOE). The second factor is the availability of energy to disperse the remaining inventory. Given the available energy sources, the form and distribution of material, and the lack of

combustibles in close proximity to the material, the associated release and respirable fractions indicate that only a small percentage of this material is at risk for release.

As a result, any inventory limit developed for the end state condition would have to be based on assumptions regarding the material form, distribution, and interactions with existing material. This is compounded by the lack of process related scenarios during the extended S&M period. Therefore, rather than develop and assign an arbitrary value for any material added, the control of inventory and related items will be assured through the use of the USQ process. This process and its application for PUREX-extended S&M is discussed later in this chapter.

Systems and equipment were reviewed to determine if classification as safety class or safety significant was appropriate. The evaluation indicated that no systems and equipment met the criteria for safety class, and only confinement structures were identified as safety significant. This determination supports the conclusion that there are no TSRs associated with the equipment and systems for the deactivated PUREX facility during extended S&M.

5.3 PROGRAMMATIC CONTROLS

The hazards analysis and evaluation of hazards to the worker for the S&M period do not take credit for any institutional safety programs to prevent, mitigate, or control the hazards identified. However, an increased level of safety during S&M activities can be ensured through the use of some specific institutional safety programs. The specific manual references and requirements for these programs are controlled by the responsible S&M organization. As a result, these references are not cited here and the remaining discussion addresses the general aspects of these programs and the expected benefits to facility safety.

The hazards associated with the PUREX facility during the S&M phase are generally one of two types--the potential for personnel exposure or injury or the potential for material releases resulting from external events such as seismic. Both of these types of hazards are well within current acceptable guidelines for nuclear facilities.

The potential for worker injuries or exposures is addressed by the institutional programs discussed in this section. These programs are adequate to minimize the risk to workers during the S&M phase. The specific development and implementation of these programs is the responsibility of the S&M organization.

Training

Many activities that are authorized during the S&M period will require specific training of personnel. Though no assumptions are made in this analysis, the use of trained and qualified personnel will reduce the hazards associated with S&M activities. The S&M

organization will determine the training and qualifications necessary for personnel performing these activities per their existing programs and requirements.

Radiation Protection

Many of the areas required for entry during S&M activities will be radiological areas and as such will require controls to ensure the safety of personnel during these activities. These controls will be consistent with the requirements of the S&M organizations existing program for radiological control.

Environmental Protection

The PUREX facility during the S&M period does not pose a significant hazard to the environment, as demonstrated by the consequence determination that is well below current risk evaluation guidelines, and as such will not require extensive environmental protection controls. The use of existing programs and procedures by the S&M organization will ensure that the environment is protected during this phase of activities at PUREX.

As Low As Reasonably Achievable

A program developed to ensure that personnel exposures to radiological and other hazards are maintained As Low As Reasonably Achievable (ALARA) is required. The use of this existing program during S&M activities will ensure that personnel exposures are minimized.

Emergency Planning

The hazards evaluated in this analysis do not require specific activities to stop the releases or keep them within existing guidelines. However, the S&M organization has an emergency response program. Implementation of this program through existing requirements and procedures will ensure that responses to accident scenarios at the PUREX facility during S&M minimize the impact of these events.

Operational Assurance

The use of existing programs to ensure operational excellence by the S&M organization will enhance the safety of the facility and workers during these activities. The use of S&M procedures, requirements, and programs related to operations controls are adequate to ensure the safety of PUREX during the S&M phase.

Industrial Safety

In the deactivated state many of the remaining hazards to workers during S&M activities are industrial in nature. The identification, prevention, and mitigation of these

hazards during S&M will be accomplished by the S&M organization's existing institutional industrial safety programs. All of the worker hazards identified in the deactivated state PUREX hazards analysis are consistent with those addressed by existing industrial safety programs. No additional controls or programs are required to address these hazards.

Fire Protection

The PUREX facility during the S&M phase will not be occupied, the only activities within the facility will be scheduled S&M activities. An evaluation of the end state facility for potential fire hazards and consequences was performed. Based on this evaluation no automatic fire systems are required for the deactivated PUREX facility. For maintenance activities with the potential for fire (i.e., cutting and welding operations, etc.) the existing programs to prevent and mitigate these hazards are adequate. Some specific controls and requirements were identified by the FHA for the PUREX facility during extended S&M. These requirements and their implementation are discussed in Section 5.4 of this document.

Industrial Hygiene

Due to the reduction and removal of hazardous materials from the PUREX facility during deactivation activities, the potential for personnel exposure during the S&M phase has been greatly reduced. As a result, the existing industrial hygiene program of the S&M organization will be adequate to protect workers during S&M activities.

5.4 FACILITY SPECIFIC CONTROLS

Based on the hazards analysis performed in support of the BIO, there are no facility systems required to prevent or mitigate hazards during the S&M phase. However, the use of some facility-specific controls is necessary to ensure the safety of the PUREX facility during extended S&M activities.

The controls discussed in this section are derived from the hazards analysis, and/or other documents developed in support of this BIO. Specifically, controls were identified in the development of the criticality safety evaluation, the fire hazards analysis, and from discussion above, the use of the USQ process for configuration control.

The following general controls are implemented to ensure facility and worker safety during the S&M phase.

1. Canyon cell cover block removal is prohibited.

2. No entry into L cell is authorized without explicit DOE approval.

3. HVAC failure repair installed in 96 hours if repairs cannot be completed and the system made operational within 14 days, requires notification of DOE.

4. Any loss of HVAC operational capability requires notification of DOE.

5.4.1 USQ Process/Configuration Control

The use of a configuration control system is essential to the extended S&M period. Configuration control will ensure that:

1. Facility conditions, inventories, and activities as evaluated in this BIO are maintained.

2. Drawings, procedures and the authorization basis documents are maintained current to facility conditions and activities during the S&M phase.

3. No activities or physical changes are implemented with out the necessary evaluations and approvals required by applicable DOE orders and requirements.

As part of the turnover documentation from the PUREX deactivation project to the responsible S&M organization, essential controlled drawings of key facility systems are provided. The maintenance of these drawing and the systems will be performed by the responsible S&M organization using their existing procedures and programs. The facility conditions do not require any special controls related to maintenance of these drawings.

Similarly programs and controls will be required for procedures used during the S&M phase. The control of these procedures will ensure that no additional activities are undertaken during the S&M phase without proper hazards evaluation, control, and approvals. Additionally, any such changes will be evaluated to ensure that they are within this authorization basis.

The key program related to control of activities and conditions to ensure that the assumptions and requirements of the authorization basis are maintained is the USQ program. The requirements of the USQ program are defined in DOE 5480.21, *Unreviewed Safety Questions*. The S&M organization will be responsible to ensure that a USQ program consistent with the requirements identified in that order is developed and implemented at the PUREX facility during this phase.

In keeping with the intent of a BIO, a number of documents have been referenced here for particular information that was pertinent to the BIO development. These references are covered in the scope of the USQ process only to the extent that the information in the reference was relied upon in the BIO. As a specific example, the PUREX FSAR was referenced in the BIO. This document is very comprehensive regarding the

conditions of the PUREX facility during the operations phase. However, the only information that was used in development of this BIO was the discussion on the seismic resistance of the facility structures. Therefore, the only information that is relevant to the application of the USQ process would be the seismic information. This approach can be similarly applied to the other references.

Any additional programs (such as quality assurance, etc.) related to configuration control will be developed and implemented at the discretion of the responsible S&M organization. These programs will governed by the existing procedures and program manuals of the S&M organization.

5.4.2 Criticality Safety

From the discussion of criticality safety in Section 4.5 of this document, and CSER 96-012, there are some controls and recommendations that are necessary for compliance with the assumptions and evaluation of criticality safety. These recommended controls are presented here for ease of use by the S&M organization:

1. No fissionable material can be added to the facility.

2. No activities involving greater than 15 grams of non-fixed Pu are authorized by this BIO.

3. No entries into L Cell are permitted without prior evaluation for potential criticality concerns and possible CAS coverage.

4. No work inside gloveboxes is authorized by this BIO and the CSER.

5. Loading of waste drums with the potential to exceed 200 grams per drum or with the potential for greater than 15 grams of non-fixed Pu must be evaluated for necessary coverage by a CAS prior to beginning the activities.

6. Operations in the Pipe Chase and M Cell vault should be evaluated by a CSER prior to beginning activities.

The current procedures for extended S&M have been reviewed using the USQ process and the results indicated that the procedures were consistent with these restrictions and the authorized activities. Changes to these procedures will be evaluated by the USQ process as discussed above.

5.4.3 Fire Protection

From the discussion of fire protection in Section 4.4, there were some specific recommendations/requirements based on the life safety code (NFPA 101), that must be

implemented to ensure the safety of workers during S&M. These recommended controls are identified here for ease of implementation by the S&M organization:

1. Work parties entering any building to conduct S&M activities must be limited to 10 or fewer workers.

2. Two separate exits must be maintained.

3. The maximum travel distance to egress exit shall be less than 91 m (300 ft.).

4. At least one enclosed, fire rated, stairway shall be provided in usable condition at all times. Usable condition implies that the fire doors are self-closing, penetrations through the stairwell walls are sealed with fire rated materials, handrails are maintained, and lighting is provided in the stairwell.

5. Illumination of means of egress shall be continuous when the building is occupied (i.e., workers are present for S&M activities). Should a loss of illumination occur while workers are present, they are required to exit the facility immediately until illumination is restored.

6. Exits shall be marked with a readily visible sign.

7. Doors along the surveillance path that are neither an exit nor a way of exit shall be marked with a "No Exit" sign.

8. Controls shall be established to minimize the introduction of combustibles, other than those required to perform S&M activities.

The current procedures for extended S&M have been reviewed using the USQ process and the results indicated that the procedures were consistent with these restrictions and the authorized activities. Changes to these procedures will be evaluated by the USQ process as discussed above.

6.0 REFERENCES

BWHC, 1997, *Fire Hazards Analysis for Plutonium Uranium Extraction Plant, Rev. 1,* HNF-SD-WM-FHA-013, B&W Hanford Company, Richland, Washington.

BWHC, 1998, *Plutonium-Uranium Extraction Facility (PUREX) Plutonium and Fission Product Residual Estimates*, HNF-2545, B&W Hanford Company, Richland, Washington.

DOE, 1992, *Nuclear Safety Analysis Reports,* DOE Order 5480.23, U.S. Department of Energy, Washington, D.C.

DOE, 1992, *Hazard Categorization and Accident Analysis Techniques for Compliance with DOE Order 5480.23, Nuclear Safety Analysis Reports*, DOE-STD-1027-92, U.S. Department of Energy, Washington, D.C.

JABE, *Seismic and Tornado Evaluation of 202-A PUREX Buildings,* RHO-CD-1560, URS/John A. Blume and Associates, Engineers, San Francisco, California, for Rockwell Hanford Operations, Richland, Washington (November 1981)

JABE, *PUREX Plant Structural Fragility Analysis,* RHO-CD-1561, URS/John A. Blume and Associates, Engineers, San Francisco, California, Richland, Washington (November 1981)

JABE, *PUREX Plant Equipment Fragility Analysis,* RHO-CD-1526, URS/John A. Blume and Associates, Engineers, San Francisco, California, Richland, Washington (August 1981)

Los Alamos Technical Associates, 1993, *Estimate of PUREX Plant Inventory of Chemicals and Radioactivity*, Los Alamos Technical Associates, Kennewick, Washington.

Rockwell, *PUREX Plant Seismic Hazards Risk Analysis and Cost Benefit Studies Based on Offsite Dose Commitments,* RHO-CD-1483, Rockwell Hanford Operations, Richland, Washington (November 1981)

Siemer, Judy, "Safety Class of PUREX Ventilation System Equipment," Internal Memo, JMS-8M400-95-001, July 27, 1995.

WHC, 1986, *PUREX Plant Final Safety Analysis Report*, WHC-SD-HS-SAR-001, Rev. 5, Westinghouse Hanford Company, Richland, Washington.

WHC, 1995, *PUREX Deactivation End Point Criteria*, WHC-SD-WM-TPP-053, Rev. 1, Westinghouse Hanford Company, Richland, Washington.

WHC, 1996, *Criticality Safety Evaluation Report 96-012: Facility Re-classification and Criticality Alarm Shutoff for Deactivated PUREX,* WHC-SD-SQA-CSA-511, Rev. 0, Westinghouse Hanford Company, Richland, Washington.

APPENDIX A

FINAL HAZARDS CATEGORY DETERMINATION

This page intentionally left blank.

APPENDIX A

FINAL HAZARDS CATEGORY DETERMINATION

In this section the final hazards category of the PUREX facility in the deactivated end state condition is determined. The hazards categorization is performed using the methodology in DOE-STD-1027-92, *Hazard Categorization and Accident Analysis Techniques for Compliance with DOE Order 5480.23, Nuclear Safety Analysis Reports.* This evaluation is based on the estimated plutonium and fission products remaining within the facility following completion of the deactivation project. These estimates were taken from HNF-2545, Rev. 0, *Plutonium-Uranium Extraction Facility (PUREX) Plutonium and Fission Product Residual Estimates.*

The end state final inventory for the facility, based on major segments within the facility, is identified in Table A-1. The estimated values were developed using facility process knowledge, operational information, and the best available data. The upper limits for these estimates are considered very conservative for determination of the hazards category. The most conservative values were used for the hazards category determination.

Table A-1. Radionuclide Estimates for Deactivated PUREX.[a]

Location	Measurable Pu (grams)	Estimated Pu (grams)	Estimated Fission Products (Ci)
Canyon (includes L Cell & E Cell skip)	4,296	930 - 4,800	200 - 500
White Room	N/A	50 - 500	0
N Cell	1,643	N/A	0
Product Removal Room	1,199	N/A	0
Deep Bed Filters	N/A	200 - 400	80 - 800
TOTALS	7,138	1,180 - 5,700	280 - 1,300

Note:

[a]Reference HNF-2545, Rev. 0, *Plutonium-Uranium Extraction Facility (PUREX) Plutonium and Fission Product Residual Estimate*, and HNF-SD-CP-HIE-004, *PUREX Deactivated End-State Hazards Analysis.*

Inventory Estimate Hazards Category Determination

Using the high estimate values identified in Table A-1, the total Pu remaining within the PUREX facility is estimated at 12,838 grams, and the total fission products are estimated at 1,300 curies. Comparing these values with the threshold values in Table A.1 of STD-1027 results in a preliminary hazards category of 2 for the deactivated PUREX facility.

However, given the final facility end state conditions and configuration, a final hazards category evaluation is warranted. From the gross inventory, the material at risk is determined based on the form, distribution and available energies to impact the material.

The 202-A structure and major components were evaluated for seismic resistance in development of the FSAR. From the FSAR the 202A structure is identified as surviving a 0.10 g earthquake and failing for a 0.25 g earthquake. From Figure A-1, the frequency of a 0.25 g earthquake for the 200 East area is approximately 1 per 10,000 years. Similarly, from this figure, a 0.10 g seismic event has an identified frequency of 5 E-4 events per year.

However, for the purposes of hazards category determination, a seismic event sufficient to breach the facility structures is assumed with no regard for the frequency. Using the form and distribution of the materials within the deactivated facility, the appropriate airborne release fractions and respirable fractions from DOE-HDBK-3010-94, *Airborne Release Fractions/Rates and Respirable Fractions for Nonreactor Nuclear Facilities*, are determined. From HDBK-3010, page 4-52, *Large Falling Object Impact or Induced Air Turbulence*, and given the consistency of the material in the canyon, the appropriate ARFxRF value is identified as 1.31 E-4. The use of this release fraction is considered conservative since the model used in developing these fractions is based on powder rather than the cohesive material form found in the canyon material. Additionally, this release fraction and respirable fraction is based on material falling 100 feet to the canyon floor. This is conservative since the seismic evaluation indicates that the PUREX cell cover blocks survive the bounding event.

These release fractions and respirable fractions were selected based on the facility structure failure in a seismic event. The scenario would result in the structure pieces falling onto the material on the canyon floor. Using that scenario, these values were determined to conservatively approximate the conditions of the facility and material.

Additionally, these same release fraction and respirable fractions are applied to the material within the PUREX gloveboxes, and the white room. Since the material in these locations is fixed with either PBS or paint, these values are considered very

Figure A-1. Seismic Event Occurrence Rates for the Hanford Site.

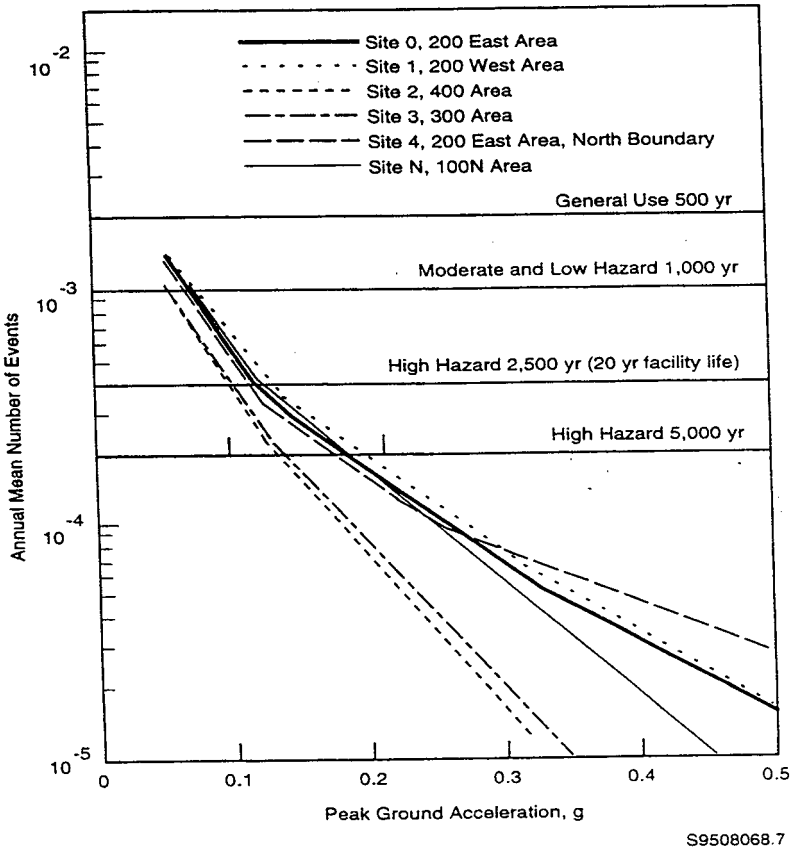

conservative in this application. Therefore, the application of these values to the total gross inventory remaining in the deactivated PUREX facility is conservative and appropriate.

Using these values and the assumption that all fission product material is 40% Sr-90 and 60% Cs-137, and Pu is 95% 239 and 5% 240, the hazards category of the PUREX facility is determined by the methodology of STD-1027. This subset of isotopes is appropriate for this determination since the results will not be changed by using a complete isotopic list. The evaluation and results are presented in Table A-2. Since no threshold value is provided in STD-1027 for Pu-240, the recommended value safety analysis procedures was used. Based on the conservative assumptions and the use of conservative release fractions and respirable fractions for modeling of a seismic event, the PUREX facility is designated as a Hazards Category 2 facility.

Table A-2. Final Hazards Category Determination.

Isotope	Quantity	ARF*RF	HC 3 Threshold	HC 2 Threshold	Adjusted HC 2 Threshold	HC 2 Ratio
Sr-90 (Ci)	520	1.31 E-4	16	2.20 E4	1.68 E5	0.0031
Cs-137 (Ci)	780	1.31 E-4	60	8.90 E4	6.79 E5	0.0011
Pu-239 (g)	12,196	1.31 E-4	8.4	9.00 E2	6.87 E3	1.7800
Pu-240 (g)	642	1.31 E-4	2.26	2.39 E2	1.82 E3	0.3500
						2.13

Hazards Categorization Evaluation Conclusions

The final hazards category for the PUREX facility in the deactivated end state condition is HC 2. This categorization is based on a conservative estimate of the remaining radionuclides within the facility, and the use of STD-1027 methodology.

APPENDIX B

HAZARDOUS MATERIAL INVENTORIES

This page intentionally left blank.

APPENDIX B

HAZARDOUS MATERIAL INVENTORIES

Table B-1. Non-Radiological Hazardous Material in Deactivated PUREX. (14 sheets)

Location[a]	Material Description	Quantity/State
151 DIVERSION BOX	See "General" Section on this list for description of remaining material.	
151 DIVERSION BOX EQUIPMENT • 241-A-151 Diversion Box Equipment (Transfer Lines)	Per the Tank Waste Remediation System (TWRS) Part B Permit Application, the diversion box is permitted to provide containment for leaks in transfer lines. Leaks have potential for containing hazardous waste constituents. See TWRS Part B for additional information. The diversion box's final operational and regulatory status may change at TWRS' discretion.	
151 DIVERSION BOX EQUIPMENT • 241-A-151 Diversion Box Equipment • (241-A-302A Catch Tank)	Per the Tank Waste Remediation System (TWRS) Part B Permit Application, the catch tank is permitted for hazardous waste storage. See TWRS Part B for additional information. The tank's final operational and regulatory status may change at TWRS' discretion.	Heel Volume: 330 gallons Final solution analysis: pH: 11.432 Cd: 1.02 ppm Cr: 0.245 ppm
202-A FACILITY EXTERIOR • 291-AK	See "General" Section on this list for description of remaining material.	
202-A FACILITY EXTERIOR • West PRV	See "General" Section on this list for description of remaining material.	
202-A FACILITY EXTERIOR	See "General" Section on this list for description of remaining material.	
202-A PUMP/TRAP PITS	See "General" Section on this list for description of remaining material.	
202-A PUMP/TRAP PITS EQUIPMENT	See "General" Section on this list for description of remaining material.	
203-A CONTROL ROOM & PUMPHOUSE	See "General" Section on this list for description of remaining material.	
203-A CONTROL ROOM & PUMPHOUSE EQUIPMENT	All tanks in the 203-A area have been flushed and emptied to a minimum heel and their associated piping drained. However, there may exist the potential for residual nitric acid in these areas.	Trace amounts to none.

Table B-1. Non-Radiological Hazardous Material in Deactivated PUREX. (14 sheets)

Location[a]	Material Description	Quantity/State
203-A DIKED AREA	All tanks in the 203-A area have been flushed and emptied to a minimum heel and their associated piping drained. However, there may exist the potential for residual nitric acid in these areas.	Trace amounts to none.
203-A TRUCK PAD	See "General" Section on this list for description of remaining material.	
203-A TRUCK PAD PIPING	All tanks in the 203-A area have been flushed and emptied to a minimum heel and their associated piping drained. However, there may exist the potential for residual nitric acid in these areas.	Trace amounts to none.
206-A FRACTIONATOR	Asbestos	Large amount of friable inside fractionator building.
FRACTIONATOR EQUIPMENT	See "General" Section on this list for description of remaining material.	
FRACTIONATOR INSTRUMENT SHACKS 1 & 2	See "General" Section on this list for description of remaining material.	
FRACTIONATOR EXTERIOR	See "General" Section on this list for description of remaining material.	
211-A	All tanks in the 211-A area have been flushed and emptied to a minimum heel and their associated piping drained. However, there may exist the potential for residual nitric acid, sulphuric acid, KOH, NOH, TBP, NPH, AFAN, and ANN in these areas.	
211-A EXTERIOR	See "General" Section on this list for description of remaining material.	
211-A EXTERIOR PIPING	All tanks in the 211-A area have been flushed and emptied to a minimum heel and their associated piping drained. However, there may exist the potential for residual nitric acid, sulphuric acid, KOH, NOH, TBP, NPH, AFAN, and ANN in these areas.	
212-A	Fission Product Load Out Station Lead Shielding around piping.	Quantity unknown
212-A EXTERIOR	See "General" Section on this list for description of remaining material.	
213-A	See "General" Section on this list for description of remaining material.	
213-A EXTERIOR	See "General" Section on this list for description of remaining material.	
214-A/B/C&D	See "General" Section on this list for description of remaining material.	

Table B-1. Non-Radiological Hazardous Material in Deactivated PUREX. (14 sheets)

Location[a]	Material Description	Quantity/State
216-A SPUD CELLAR	Lead Shielding Wrapped around pipe (18"x 24"x 1/8").	~10 kgs (22 lbs.)/Solid
216-A-42 DIVERSION BASIN	See "General" Section on this list for description of remaining material.	
216-A-42A PUMP STATION	See "General" Section on this list for description of remaining material.	
216-A-42B VALVE BOX	See "General" Section on this list for description of remaining material.	
216-A-42C VALVE BOX	See "General" Section on this list for description of remaining material.	
216-A-42D DIVERSION BOX	See "General" Section on this list for description of remaining material.	
216-A-42E DIVERSION BOX	See "General" Section on this list for description of remaining material.	
291-A STEAM TURBINE	See "General" Section on this list for description of remaining material.	
291-A • STEAM TURBINE	See "General" Section on this list for description of remaining material	
291-A EXHAUST FAN PAD	See "General" Section on this list for description of remaining material	
291-AD	See "General" Section on this list for description of remaining material.	
291-AD MONITORING EQUIPMENT	See "General" Section on this list for description of remaining material.	
291-AE	See "General" Section on this list for description of remaining material.	
291-AE EXTERIOR	See "General" Section on this list for description of remaining material	
291-AH	See "General" Section on this list for description of remaining material.	
291-AH MONITORING EQUIPMENT	See "General" Section on this list for description of remaining material.	
292-AB	See "General" Section on this list for description of remaining material.	
292-AB EXTERIOR	See "General" Section on this list for description of remaining material.	
293-A	<u>Dissolver Off-Gas Station</u> Asbestos Lead: 2(350 lbs.) lead shielding pigs. <u>Basement</u> (2) 300 lb. lead shielding pigs encased by one layer of stainless steel. (1) 100 lb. lead beta cam.	Large amount of friable inside bldg. 318.2 kgs. (700 lbs)/Solid 273 kgs. (600 lbs.)/Solid 45.5 kgs. (100 lbs.)/Solid

Table B-1. Non-Radiological Hazardous Material in Deactivated PUREX. (14 sheets)

Location[a]	Material Description	Quantity/State
293-A EQUIPMENT	See "General" Section on this list for description of remaining material.	
294-A	See "General" Section on this list for description of remaining material.	
294-A SYSTEMS	See "General" Section on this list for description of remaining material.	
2701-AB BADGEHOUSE	See "General" Section on this list for description of remaining material.	
2701-AB BADGEHOUSE EXTERIOR	See "General" Section on this list for description of remaining material.	
2709-A	N/A	Building has been removed.
2711-A & 2712-A	See "General" Section on this list for description of remaining material.	
2711-A & 2712-A EQUIPMENT	See "General" Section on this list for description of remaining material.	
2714-A	See "General" Section on this list for description of remaining material.	
2714-U SHED	See "General" Section on this list for description of remaining material.	
2714-U EXTERIOR		
AQUEOUS MAKEUP ROOMS (AMU) AND ANNEX EXTERIOR	Lead washers affixing transite.	Throughout building exterior
AMU	See "General" Section on this list for description of remaining material.	
AMU ELEVATOR	See "General" Section on this list for description of remaining material.	
AMU 4TH FLOOR	See "General" Section on this list for description of remaining material.	
295-A ASD SHACK	See "General" Section on this list for description of remaining material.	
ASD SYSTEM	See "General" Section on this list for description of remaining material.	
ASD CAISSON	See "General" Section on this list for description of remaining material.	
ASD VALVE PIT	See "General" Section on this list for description of remaining material.	
CANYON EAST CRANE	See "General" Section on this list for description of remaining material.	
CANYON SLAVE CRANE	See "General" Section on this list for description of remaining material.	
CANYON WEST CRANE	See "General" Section on this list for description of remaining material.	

Table B-1. Non-Radiological Hazardous Material in Deactivated PUREX. (14 sheets)

Location[a]	Material Description	Quantity/State
CANYON POOL CELL & SLUG STORAGE BASIN	Lead counterweights, wrapped in a bundle, are on the south end of a lifting yolk located on a rack in the slug storage basin.	401 kgs. (~885 lbs.)/Solid Approximately 30 lead counterweights (2"x3"x12")
CANYON C CELL DECK ACCESS AIRLOCK	See "General" Section on this list for description of remaining material.	See "General" Section on this list for description of remaining material.
CANYON F CELL DECK VIEWING WINDOW	Lead on viewing window.	Unknown quantity
CANYON/A-CELL	Ag in Silver Reactor	unknown quantity.: Full charge is 250 lb. $AgNO_3$ (670 g-mol Ag)
	Dissolver moderator lining: cadmium	~43 kgs. (~94.6 lbs.)
	Dissolver thermowells: mercury	~38 kgs. (~83.6 lbs.) /Liquid
	Lead counter weights	89 kgs. (195.9 lbs.)/Solid
CANYON/B-CELL	Ag in Silver Reactor	unknown quantity.: Full charge is 250 lb. $AgNO_3$ (670 g-mol Ag)
	Dissolver moderator lining: cadmium	~43 kgs. (~94.6 lbs.)
	Dissolver thermowells: mercury	~38 kgs. (~83.6 lbs.)/Liquid
	Lead counter weights	167 kgs. (367.3 lbs.)/Solid
CANYON/C-CELL	Ag in Silver Reactor	unknown quantity.: Full charge is 250 lb. $AgNO_3$ (670 g-mol Ag)
	Dissolver lining: cadmium	~43 kgs. (~94.6 lbs.)
	Dissolver thermowells: mercury	~38 kgs. (83.6 lbs.)/Liquid
	Lead counter weights	111.9 kgs. (246.2 lbs.)/Solid
CANYON/D-CELL	Lead counter weights	24.1 kgs. (53 lbs.)/Solid
CANYON/E-CELL	Lead: counter weights jumpers	254.3 kgs. (559.5 lbs.)/Solid 410.1 kgs. (902.2 lbs.)/Solid
CANYON/F-CELL	Lead: counter weights shielding	1133.6 kgs. (2494 lbs.)/Solid 536.4 kgs. (1180 lbs.)/Solid
	Chromium in floor debris: concrete solids contaminated with solutions from E Cell process.	Trace amounts throughout E-Cell floor

Table B-1. Non-Radiological Hazardous Material in Deactivated PUREX. (14 sheets)

Location[a]	Material Description	Quantity/State
CANYON/G-CELL	Lead: counter weights jumpers	531.8 kgs. (1170 lbs.)/Solid 90.9 kgs. (200 lbs.)/Solid
	Potential PCBs in pulsar lubricant.	unknown quantity: once used for lubrication
CANYON/H-CELL	Lead counter weights	303.2 kgs. (664.9 lbs.)/Solid
	Potential PCBs in pulsar lubricant.	unknown quantity: once used for lubrication
CANYON/J-CELL	Lead: counter weights jumpers	779 kgs. (1713.7 lbs.)/Solid 259.3 kgs. (570.5 lbs.)/Solid
	Cadmium: 4 Neutron monitor pigs (1 from J4, 3 from J6)	23.6 kgs. (52 lbs.) total/Solid
	Potential PCBs in pulsar lubricant.	unknown quantity: once used for lubrication
CANYON/K-CELL	Lead: counter weights shielding jumpers	254.3 kgs. (559.5 lbs.)/Solid 32.1 kgs. (70.6 lbs.)/Solid 45.5 kgs. (100 lbs.)/Solid
	Potential PCBs in pulsar lubricant.	unknown quantity: once used for lubrication
CANYON/L-CELL	Lead counter weights	310.1 kgs. (682.3 lbs.)/Solid
CANYON DECK	Lead sheets on deck: (2) 2'x4'x$^1/_{16}$"	13.7 kgs. (30 lbs.)/Solid
CANYON LOBBY	See "General" Section on this list for description of remaining material.	
CHANGE ROOMS	See "General" Section on this list for description of remaining material.	
COMPRESSOR ROOM	See "General" Section on this list for description of remaining material.	
COMPRESSOR ROOM • PROCESS & INSTRUMENT AIR	See "General" Section on this list for description of remaining material	
CONTROL ROOMS, OFFICES & MAINTENANCE SHOPS	See "General" Section on this list for description of remaining material.	
HEAD END, CENTRAL, POWER CONTROL ROOMS & OFFICES	See "General" Section on this list for description of remaining material.	
HEAD END, CENTRAL, POWER CONTROL ROOMS & OFFICE LIGHTING	See "General" Section on this list for description of remaining material.	
271-AB	See "General" Section on this list for description of remaining material.	
271-AB LIGHTING	See "General" Section on this list for description of remaining material.	
MAINTENANCE SHOPS	See "General" Section on this list for description of remaining material	
SWP LOBBY		

Table B-1. Non-Radiological Hazardous Material in Deactivated PUREX. (14 sheets)

Location[a]	Material Description	Quantity/State
295-AC CSL SHACK	See "General" Section on this list for description of remaining material.	
CSL SYSTEM	See "General" Section on this list for description of remaining material.	
CSL CAISSON	See "General" Section on this list for description of remaining material.	
295-AD CWL SHACK	See "General" Section on this list for description of remaining material.	
CWL SYSTEM	See "General" Section on this list for description of remaining material.	
CWL CAISSON	See "General" Section on this list for description of remaining material.	
CWL PIT	Lead counterweight.	2.3 kgs. (5 lbs.)/Solid
EAST MEZZANINE & CANYON SUPPORT ROOMS	Residual hydraulic oil in pneumatic system lines.	Quantity unknown.
EAST SWITCH GEAR ROOM	See "General" Section on this list for description of remaining material.	
HOT SHOP	See "General" Section on this list for description of remaining material.	
LAB CENTER CORRIDOR & CHANGE/LUNCH ROOMS	See "General" Section on this list for description of remaining material.	
LAB HVAC ROOM	Lead shielding: 6 lead sheets (6"x18"x1/8")	2.5 kgs. (5.5lbs)/solid
LAB HVAC EQUIPMENT	See "General" Section on this list for description of remaining material.	
LAB ICP FILTER	See "General" Section on this list for description of remaining material.	
LABS	Decon Room (under hood 31): 7 lead bricks (25 lbs. each) 2 lead sheets (12"x12"x1/4") Outside Lab 5 in Corridor in Door 4: 2 lead sheets (12"x12"x1/8") 2 lead sheets (6"x14"x1/8") Outside Lab 5 in Corridor in Door 6: 4 lead sheets (12"x12"x1/8") Outside Lab 5 in Corridor in Door 10: 1 lead sheet (1"x8"x30")	 79.5 kgs. (175 lbs.)/solid 13.4 kgs. (29.4 lbs.)/solid 7.4 kgs. (14.7 lbs.)/solid 3.9 kgs. (8.6 lbs.)/solid 13.4 kgs. (29.4 lbs.)/solid 44.6 kgs. (98.2 lbs.)/solid
LAB COUNTING ROOM EQUIPMENT	See "General" Section on this list for description of remaining material.	
LAB HOODS	See "General" Section on this list for description of remaining material.	
LAB DOCK	See "General" Section on this list for description of remaining material.	

Table B-1. Non-Radiological Hazardous Material in Deactivated PUREX. (14 sheets)

Location[a]	Material Description	Quantity/State
LOADING DOCKS	See "General" Section on this list for description of remaining material.	
M-CELL	See "General" Section on this list for description of remaining material.	
MOBILE OFFICES	Mobile offices have been physically removed from the PUREX compound, therefore, no hazardous materials remain.	
N-CELL	Lead shielding: 8 Leaded glass panels for Upper and Lower Control Room. 2 Lead-filled vault doors to Lower Control Room.	 3869.1 kgs. (8512 lbs.)/Solid 3 Upper & 3 Lower @ 568.2 kgs. (1250 lbs.) each. 2 Upper @ 230 kgs. (506 lbs.) ea. ~1818.2 kgs. (~4000 lbs.) total/Solid
N-CELL GLOVEBOXES	Bagging Box, Conveyor Housing , and Secondary Canning Glovebox with stainless steel and lead sides. Lead glass and packing on Secondary Canning Glovebox Lead Acryl window on Vessel Glovebox Powder Load Out and Maintenance Glovebox with stainless steel and lead sides. Lead Acryl, both attached and detached on Calciner Glovebox. Lead packing as needed to fill window installation cavities.	340.9 kgs. (750 lbs.) total/Solid 113.[illegible] kgs. (250 lbs.) ea. 77.3 kgs. (170 lbs.)/Solid 8.2 kgs. (18 lbs.)/Solid 527 3 kgs. (1160 lbs.)/Solid Quantity unknown Quantity unknown
N-CELL ROOM EXHAUST	See "General" Section on this list for description of remaining material.	
PAINT SHOP	See "General" Section on this list for description of remaining material.	
295-AB PDD SHACK	See "General" Section on this list for description of remaining material.	
PDD SYSTEM	See "General" Section on this list for description of remaining material.	
PDD CAISSON	Aerosol cans (contents unknown).	2 buckets with misc. tools & aerosol cans

Table B-1. Non-Radiological Hazardous Material in Deactivated PUREX. (14 sheets)

Location[a]	Material Description	Quantity/State
PDD SAMPLE PIT	See "General" Section on this list for description of remaining material.	
NEW PDD SHACK	See "General" Section on this list for description of remaining material.	
P & O GALLERY	See "General" Section on this list for description of remaining material.	
P & O GALLERY SYSTEMS	See "General" Section on this list for description of remaining material.	
PIV ROOM	See "General" Section on this list for description of remaining material.	
PR ROOM	Lead shielding: Q-Cell piping (Q686 & Q619)	Quantity unknown (piping runs along PR Rm.)
PR ROOM EXHAUST	See "General" Section on this list for description of remaining material.	
PR ROOM GLOVEBOXES	Lead shielding: L14 Loadout Glovebox	294.5 kgs. (648 lbs.)/Solid
Q-CELL	Lead-filled door to Process Cell used as shielding. <u>Q-Cell Outer Lobby</u> (18) 86.75" x 35.5" x 2" doors with lead plexiglass viewing windows stored at the bottom of the Q Cell stairwell near Column 9.	1818.2 kgs. (4000 lbs.)/Solid 18 leaded plexiglass viewing windows. (percentage of lead unknown)
Q CELL CONTROL ROOM	See "General" Section on this list for description of remaining material.	
Q CELL LOADOUT ROOM	See "General" Section on this list for description of remaining material.	
Q CELL GLOVEBOXES	Leaded glass in 31 portholes on hood face used as shielding.	140.9 kgs. (310 lbs.) Total weight (percentage lead content unknown)/Solid
Q CELL AMU	See "General" section on this list for description of remaining material.	
Q CELL MAINTENANCE HOOD ROOM	See "General" section on this list for description of remaining material.	
Q CELL VAULT ROOM	See "General" section on this list for description of remaining material.	
R CELL	Potential PCB's in pulsar lubricant.	Unknown quantity; once used for lubrication.
R CELL EQUIPMENT	See "General" section on this list for description of remaining material.	
R CELL EXTERIOR	See "General" section on this list for description of remaining material.	

Table B-1. Non-Radiological Hazardous Material in Deactivated PUREX. (14 sheets)

Location[a]	Material Description	Quantity/State
SAMPLE GALLERY	Six In Line Monitors (approx. 100 lbs of lead clad in stainless steel in each monitor) • 1 on G5 w/no lead counterwts. • 2 on H3 w/(8) lead 25lb. counterwts. • 1 on J4 w/(4) lead 25lb. counterwts. • 1 on K4 w/(4) lead 25lb. counterwts. • 1 on L2 w/(4) lead 25lb. counterwts. Lead Shielding on E3 & F15 Jet Air Valves. Lead Shielding on F26 Pipe Chase. Lead Shielding on Drip Tray left of J1 sampler. Manipulator Room • 2 manipulators w/(4) 10 lb. counterwts. each • 1 portable lead shielding board approx. (4'x4'x1/2") Portable Lead Shielding Board • 1 in front of Sampler U3 • 1 against column 13 Lead construction on ventilation containment located across L4 sampler.	273 kgs. (600 lbs.)/Solid plus • 0 kgs • 91 kgs. (200 lbs)/Solid • 45 kgs. (100 lbs)/Solid • 45 kgs. (100 lbs)/Solid • 45 kgs. (100 lbs)/Solid 2.3 kgs. (5 lbs)/Solid Unknown Qty./Solid approx. 25 lbs./Solid • 36 kgs. (80 lbs.)/Solid • 213 kgs. (469 lbs.)/Solid • 213 kgs. (469 lbs.)/Solid • 213 kgs. (469 lbs.)/Solid Unknown Qty./Solid
SAMPLE GALLERY CHEMICAL HEADERS	See "General" section on this list for description of remaining material.	
SAMPLE GALLERY DECON HOOD	See "General" section on this list for description of remaining material.	
SAMPLE GALLERY HOOD HVAC	See "General" section on this list for description of remaining material.	
SAMPLE GALLERY HOOD HVAC STATION	See "General" section on this list for description of remaining material.	
SAMPLE GALLERY IODINE MONITORS	DOG Iodine Monitor • Lead cap • Lead siding and a lead board underneath monitor. F1 Iodine Monitor • Lead glass	• Unknown Qty./Solid • Unknown Qty./Solid • Unknown Qty./Solid
SAMPLE GALLERY LOADIN HOODS	See "General" section on this list for description of remaining material.	

Table B-1. Non-Radiological Hazardous Material in Deactivated PUREX. (14 sheets)

Location[a]	Material Description	Quantity/State
SAMPLE GALLERY N-CELL HALON FIRE SYSTEM	See "General" section on this list for description of remaining material.	
SAMPLE GALLERY N-CELL VACUUM PUMP	See "General" section on this list for description of remaining material.	
SAMPLE GALLERY PDD NEUTRALIZATION	See "General" section on this list for description of remaining material.	
SAMPLE GALLERY ROOM EXHAUST	See "General" section on this list for description of remaining material.	
SAMPLE GALLERY SAMPLERS	Samplers • Lead glass on sampler faces • Lead doors part of original A-Type samplers' construction. (A3,B3,C3,D3,D4,D5HOOD,E1,E6,F8,F10,F13,F15,F16,F18,F26,G2,G8,H1,H2,H3,J1,J-23-1,J-23-2,J21 & J22) Lead shielding (3'x6"x1/2") on E6 sampler counter. D1 Cave • Covered and painted lead bricks: walls of D1 cave • Lead glass of D1 cave D5 Cave • 50 25-lb.bricks on pipe chase above D5 cave • Lead glass of D5 cave • Two glove manipulators:(7) 10 lb.+(1)25 lb. Lead counterweights per manipulator	Unknown Qty./Solid 20 kgs. (44 lbs.)/Solid • Unknown Qty./Solid • Unknown Qty./Solid • 568 kgs. (1,250 lbs.)/Solid • Unknown Qty./Solid • 86 kgs. (190 lbs.)/Solid
SAMPLE GALLERY WASTE COMPACTOR	See "General" section on this list for description of remaining material.	
295-AA SCD SHACK	See "General" section on this list for description of remaining material.	
SCD SYSTEM	See "General" section on this list for description of remaining material.	
SCD CAISSON	See "General" section on this list for description of remaining material.	
STORAGE GALLERY	Lead: shielding on floor at Col. 32 (18"x30"x1/2") shielding blanket on northeast floor across from glovebox (24"x12"x1/4")	227.3 kgs.(approx 500 lbs.)/Solid 13.3 kgs. (approx. 30 lbs.)/Solid
STORAGE GALLERY SYSTEMS	See "General" section on this list for description of remaining material.	
U-CELL	Asbestos	Large amount of friable inside fractionator building.

Table B-1. Non-Radiological Hazardous Material in Deactivated PUREX. (14 sheets)

Location[a]	Material Description	Quantity/State
U-CELL EQUIPMENT	See "General" section on this list for description of remaining material.	
VENTILATION SUPPLY ROOMS	See "General" section on this list for description of remaining material.	
PROCESS BLOWER ROOM	See "General" section on this list for description of remaining material.	
SERVICE BLOWER ROOM	See "General" section on this list for description of remaining material.	
HVAC AIR SUPPLY	See "General" section on this list for description of remaining material.	
WEST SWITCH GEAR ROOM	See "General" section on this list for description of remaining material.	
WHITE ROOM	See "General" section on this list for description of remaining material.	
WHITE ROOM SYSTEMS	See "General" section on this list for description of remaining material.	
YARD	See "General" section on this list for description of remaining material.	
281-A DIESEL GENERATORS	See "General" section on this list for description of remaining material.	
DIESEL GENERATORS		
CASE 4 • 202-A VENTILATION	See "General" section on this list for description of remaining material.	
CASE 4 • ELECTRICAL	See "General" section on this list for description of remaining material.	
CASE 4 • FACILITY OFF GAS CONDENSATE CATCH TANKS		
CASE 5 • PR ELEVATOR	See "General" section on this list for description of remaining material.	
CASE 6 • ELECTRICAL	See "General" section on this list for description of remaining material.	
CASE 6 • FH-V11-1 (#1 FILTER)	Ammonium Nitrate salts from gas phase reactions during PUREX operation and corrosion by-products.	Trace amounts.
CASE 6 • FH-V11-2 (#2 FILTER)	Ammonium Nitrate salts from gas phase reactions during PUREX operation and corrosion by-products.	Trace amounts.
CASE 6 • HP STEAM	See "General" section on this list for description of remaining material.	
CASE 6 • SANITARY SEWER	See "General" section on this list for description of remaining material.	
CASE 6 • SANITARY WATER	See "General" section on this list for description of remaining material.	

Table B-1. Non-Radiological Hazardous Material in Deactivated PUREX. (14 sheets)

Location[a]	Material Description	Quantity/State
CASE 6 • UTILITY RAW WATER	See "General" section on this list for description of remaining material.	
RAILROAD CUT	See "General" section on this list for description of remaining material.	
RAILROAD STORAGE TUNNEL #1 & #2 EXHAUST FANS	See "General" section on this list for description of remaining material.	
RAILROAD TUNNEL (BETWEEN VERTICAL DOOR AND WATER DOORS)		
RAILROAD STORAGE TUNNELS 218-E-14 & 218-E-15	A description and inventory of the hazardous waste stored in the tunnel may be found in DOE/RL-90-24, Rev. 2, "Hanford Facility Dangerous Waste Permit Application, PUREX Storage Tunnels Part A and B".	
WATER FILLED DOORS	See "General" section on this list for description of remaining material.	
WEST CRANE MAINTENANCE PLATFORM (WCMP)	Lead lined camera assembly on West Crane Maintenance Platform.	Quantity unknown
ELECTRICAL POWER	PCBs: Some deactivted fluorescent fixtures contain PCB's. There is no potential leakage. Mercury: Deactivated bulbs with no potential leakage.	Quantity unknown

Table B-1. Non-Radiological Hazardous Material in Deactivated PUREX. (14 sheets)

Location[a]	Material Description	Quantity/State
GENERAL	Lead as a solid component, such as paint, light bulb contacts, washers affixing transite, sanitary water line joints packed with lead mesh; steam, air, and water safety relief valve seals; components of control panels -- all abandoned in place and stable during S&M. Zinc used in galvanized piping; zinc, silver, and lead contacts are used in the electrical system. Lead and zinc were used as soldering in the electrical and plumbing systems. All stable during S&M. Mercury in thermostats and in electronic switches (i.e. electronic switches) throughout 202-A. Mercury vapor lights were also used for exterior lighting. Asbestos abandoned throughout the plant as a solid component such as in transite siding, utility lines insulation, and gasket material. Asbestos is especially notable in 206-A, & 293-A. Refer to Asbestos Assessment for additional descriptions of asbestos remaining at the PUREX Facility. Unknown organic in liquid films, greases, and solid residues in bearings and gearboxes throughout the plant. Stable during S&M period. Undetermined quantities of PCB's exist in transformers, ballasts, and lubricants/gear oil once used throughout the plant.	

Note:

[a]See "General" section, for areas that do not contain specifically identifiable materials.

Table B-2. Radiogical Inventory in Deactivated PUREX. (2 sheets)

	Measurable Pu		Estimated Pu		Mixed Fission Products	
Location	Grams	Form	Grams	Form	Curies	Form
A Cell	N/A	N/A	100-700	dust; debris; sludge; spills	20 Sr^{90} 30 Cs^{137}	debris, sludge, absorbed spills
B Cell	N/A	N/A	100-700	dust; debris; sludge; spills	20 Sr^{90} 30 Cs^{137}	debris, sludge, absorbed spills
C Cell	N/A	N/A	100-700	dust; debris; sludge; spills	20 Sr^{90} 30 Cs^{137}	debris, sludge, absorbed spills
D Cell	N/A	N/A	300-1200	dust; debris; sludge; spills	20 Sr^{90} 30 Cs^{137}	debris, sludge, absorbed spills
E-Cell (excluding skip)	N/A	N/A	200-800	dust; debris; sludge; spills	20 Sr^{90} 30 Cs^{137}	debris, sludge, absorbed spills
H Cell	N/A	N/A	50-400	dust; debris; sludge; spills	20Sr_{90} 30 Cs^{137}	debris, sludge, absorbed spills
J Cell (J5A)	N/A	N/A	30-100	dust; debris; sludge; spills	<0.1 Sr^{90} <0.1 Cs^{137}	debris, sludge, absorbed spills
J Cell (excluding J5A)	N/A	N/A	50-200	dust; debris; sludge; spills	<0.1Sr^{90} <0.1 Cs^{137}	debris, sludge, absorbed spills
F Cell (includes E Cell skip)	400	debris, sludge, spills	Negl	N/A	100 Sr^{90} 100 Cs^{137}	debris, sludge, absorbed spills
G Cell	N/A	N/A	Negl	N/A	0.1 - 1	debris, sludge, absorbed spills
K Cell	N/A	N/A	Negl	N/A	<0.1 Sr^{90} <0.1 Cs^{137}	debris, sludge, absorbed spills
L Cell	3896		N/A	N/A	<0.1 Sr^{90} <0.1 Cs^{137}	debris, sludge, absorbed spills
M Cell	N/A	N/A	Negl	decon work residues	0.1 - 1	debris, sludge, absorbed spills
N Cell	1643	fixed with PBS	N/A	N/A	N/A	
PR Room	1199	fixed with PBS	N/A	N/A	N/A	
Q Cell	N/A	N/A	Negl	N/A	N/A	
White Room	N/A	N/A	50-500	Pu fixed under multiple coats of paint.	N/A	
R Cell	N/A	N/A	Negl	N/A	N/A	debris, sludge, absorbed spills
Deep bed filter #1	N/A	N/A	100-200	Pu trapped in glass fiber matrix along with traces of TBP, dirt, debris & Ammonia Nitrate	250,000 µ - Am^{241} 20-200 Ci - Cs-Sr	Americium 241 trapped in fiber Cs/Sr trapped in fiber

Table B-2. Radiogical Inventory in Deactivated PUREX. (2 sheets)

	Measurable Pu		Estimated Pu		Mixed Fission Products	
Deep bed filter #2	N/A	N/A	100-200	Pu trapped in glass fiber matrix along with traces of TBP, dirt, debris & Ammonia Nitrate	250,000 µ - Am^{241} 200-200 Ci - Cs/Sr	Americium 241 trapped in fiber Cs/Sr trapped in fiber

Table B-3. Detailed Residual Radiological Material In Deactivated PUREX.

	Measurable Pu		Estimated Pu		Mixed Fission Products	
Location	Grams	Form	Grams	Form	Curies	Form
M Cell vault	N/A	N/A	<10	sludge, process residuals	<0 5	Process residuals
Slug Basin	N/A	N/A	<1	sludge, residual liquid	<1	liquid and solid phases
Sample Gallery Hoods	N/A	N/A	<50	process residuals, spills	<100	dirt, debris, process residuals
Sample Gallery Exhaust Duct	N/A	N/A	<1	process residuals	<5	dirt, debris, salts, process residuals
Canyon Vessels (total)	N/A	N/A	120	process residuals after flushing	<1	flushed vessels assuming no sludge
206 A fractionator	N/A	N/A	<1	dirt, debris, process residuals	<10	dust, debris, sludge, spills
293 A	N/A	N/A	<1	dirt, debris, process residuals	<10	dust, debris, sludge, spills
Tk 216-A2	N/A	N/A	<1	dirt, debris, process residuals	<1	sludge residuals
Tk V11-1	N/A	N/A	<1	dirt, debris, process residuals	<10	
Lab Hoods	N/A	N/A	<0.1	analytical residuals	<1	dust, debris, sludge, spills
Lab Pipe Chase	N/A	N/A	<50	residuals	<1	

Table B-3 provides a more detailed evaluation of some key areas and equipment within the PUREX facility. The values identified in Table B-3 were bounded by the values identified in Table B-2 and are provided here as additional information for use during S&M.

This page intentionally left blank.